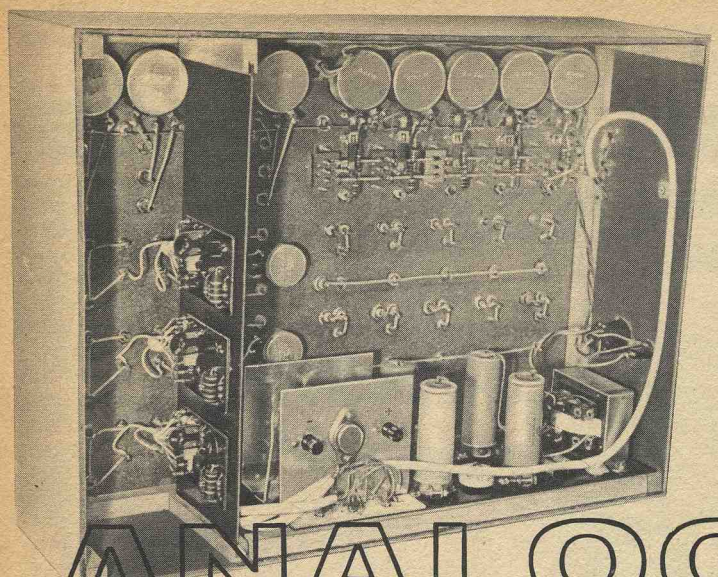

PEAC

By
D. BOLLEN

ANALOGUE COMPUTER

THE main design target for the PEAC power supply was a maximum voltage variation of not more than 1 per cent under all normal operating conditions. Several circuit configurations were tried, based upon either series or shunt regulation, but it was found that shunt regulation invariably gave the best performance for a given cost, plus the bonus of complete short-circuit protection. It was not considered to be a disadvantage for computer work, where nearly everything is switched on for most of the time, that a shunt regulated supply would be wasteful of power under no-load conditions.

The current reserve of the stabilised supply will just be sufficient to cater for the needs of UNITS "A to D". If further expansion of the computer is contemplated, beyond the inclusion of UNIT "D", a subsidiary unstabilised supply can be added to the computer at a late stage of construction, to power the relays of UNITS "B" and "D", and thus make available some extra current from the stabilised supply.

STABILISED POWER PACK

The circuit of Fig. 3.1 is based on a small, standard type of rectifier transformer, with bridge rectification
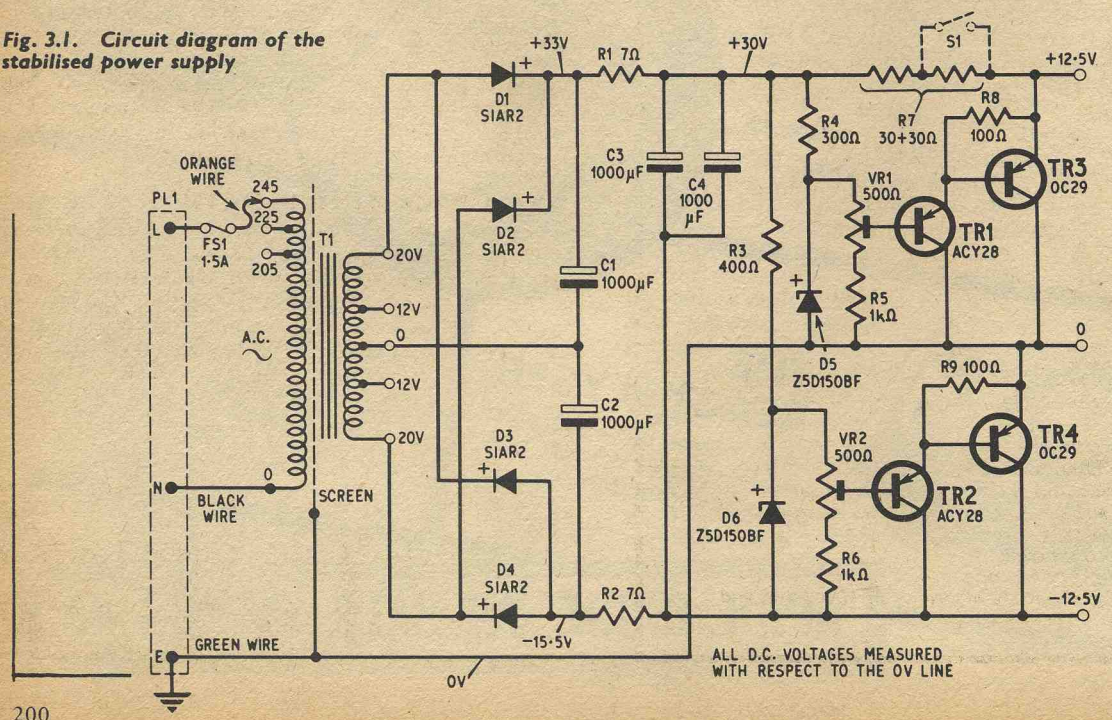
Fig. 3.1. Circuit diagram of the stabilised power supply