AUTOMATIC
SCREW MACHINES

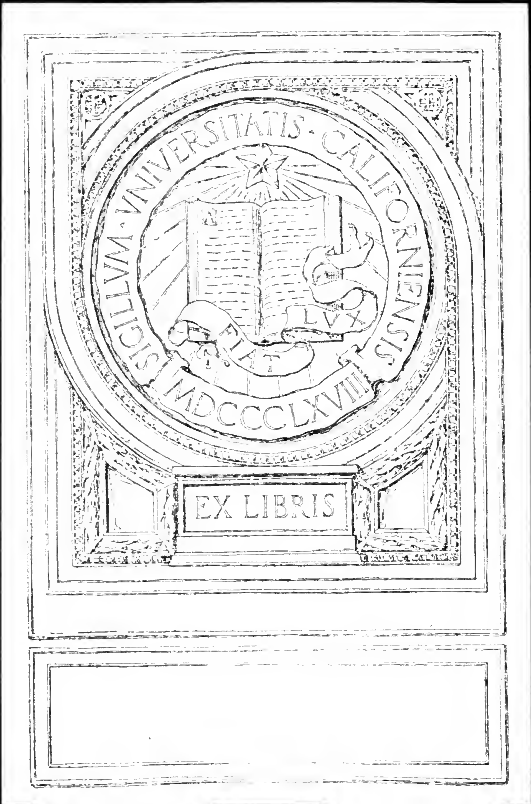

AUTOMATIC
SCREW MACHINES

AUTOMATIC SCREW MACHINES

A TREATISE ON THE CONSTRUCTION, DESIGN, AND OPERATION OF AUTOMATIC SCREW MACHINES AND THEIR TOOL EQUIPMENT

BY

DOUGLAS T. HAMILTON
Associate Editor of MACHINERY
Author of "Automatic Screw Machine Practice," "Shrapnel Shell Manufacture," "Machine Forging," "Bolt, Nut, and Rivet Forging," Etc.

AND

FRANKLIN D. JONES
Associate Editor of MACHINERY
Author of "Turning and Boring," "Planing and Milling," "Gaging Tools and Methods," Etc.

FIRST EDITION

NEW YORK
THE INDUSTRIAL PRESS
London: THE MACHINERY PUBLISHING CO., Ltd.
1916

Composition and Electrotyping by The Plimpton Press, Norwood, Mass

PREFACE

THE class of automatic machine tools commonly known as screw machines represents one of the most important developments in the machine tool field, and includes ingenious mechanisms which may be studied with profit by all who are interested in mechanical movements and modern methods of manufacture. This book deals with five distinct branches of automatic screw machine practice. It covers the design and construction of different well-known types of single- and multiple-spindle machines, the tool equipment used for various classes of work, the methods of adjusting or setting-up machines made by different manufacturers, the design of screw machine cams, and the application of machines of this type to both typical and unusual operations. The descriptions of machines are confined principally to the important fundamental features of the design, and deal especially with those mechanisms which control parts that must operate automatically and in accordance with the nature of the work being produced. The machines illustrated were selected as representative types, each embodying important developments in screw machine design.

While designers have incorporated many ingenious ideas in automatic screw machines, the tool equipment and auxiliary attachments used in conjunction with these machines are not lacking either in cleverness of design, or effectiveness in increasing the efficiency and range of machine tools of this class, to include an endless variety of work. The various types of tools used for turning, boring, recessing, threading, knurling, etc., are described, and the methods of applying these tools are illustrated by practical examples. Different attachments are also described, such as are commonly used for slotting screw-heads, milling, cross-drilling, and automatically feeding separate castings or forgings to the machine from a magazine. Information on the adjustment and setting-up of screw machines is given to supplement the general descriptions and show just what changes are necessary when a machine must be arranged for producing different parts. In dealing with the subject of cam design, the exact method of laying out a set of cams for a given operation has been described in detail, in order to clearly indicate the fundamental principles involved.

This treatise is intended especially for the users of screw machines and the designers of tools and auxiliary equipment, and, in order to make it of greater practical value to the men responsible for the economical operation of these machines and the production of parts which conform to required standards of accuracy, many different classes of work and a large variety of standard and special tools have been described in detail. The cooperation of screw machine manufacturers in supplying illustrations and data is much appreciated.

THE AUTHORS.

New York, *September*, 1916

CONTENTS

CHAPTER I

SCREW MACHINE CLASSIFICATION AND DEVELOPMENT

PAGES

Origin of the Term "Screw Machine" — Distinction between Automatic and Semi-automatic Machines — General Features of Automatic Screw Machines — Classification of Automatic Screw Machines — Development of Single- and Multiple-spindle Types — General Application of Automatic Screw Machines — Advantages of Single- and Multiple-spindle Designs 1–10

CHAPTER II

SINGLE-SPINDLE AUTOMATIC SCREW MACHINES

Brown & Sharpe Automatic Screw Machine — Cleveland Automatic Screw Machine — Gridley Single-spindle Automatic Turret Lathe — Chicago Automatic Screw Machine 11–38

CHAPTER III

MULTIPLE-SPINDLE AUTOMATIC SCREW MACHINES

Acme Four-spindle Automatic Screw Machine — Davenport Five-spindle Automatic Screw Machine — Hayden Five-spindle Automatic Screw Machine — Gridley Four-spindle Automatic Screw Machine — New Britain Six-spindle Automatic Screw Machine 39–83

CHAPTER IV

AUTOMATIC SCREW MACHINE TOOL EQUIPMENT

Circular Forming and Cutting-off Tools — Tool-holders for Flat Forming Tools — Box-tools — Methods of Applying Box-tool Cutters — Work Supports for Box-tools —

Hollow Mills — Centering and Facing Tools — Drills and Drill-holders — Counterboring Tools — Reamers and Reamer-holders — Swing Tools for Turning and Recessing — Shaving Tools — Dies for Screw Machine Work — Die-holders — Taps for Screw Machines — Knurling Tools 84–147

CHAPTER V

ADJUSTING OR SETTING-UP AUTOMATIC SCREW MACHINES

Setting-up the Brown & Sharpe Machine — Adjustments on the Cleveland Automatic — Method of Setting-up the Acme Multiple-spindle Machine — Setting-up the Davenport Multiple-spindle Automatic........................ 148–196

CHAPTER VI

ATTACHMENTS FOR AUTOMATIC SCREW MACHINES

Screw Slotting Attachment — Slotting and Slabbing Attachment — Index Drilling Attachment — Cross-drilling Attachments — Turret Drilling Attachment — Burring Attachment — Tap and Die Revolving Attachment — Accelerated Reaming Attachment — Drilling and Milling Attachment — Vertical-spindle Milling Attachment — End-milling or Slotting Attachment — Attachment for Forming Squares and Hexagons — Attachment for Hobbing Worms and Spiral Gears — Magazine Feeding Attachments............ 197–223

CHAPTER VII

DESIGNING SCREW MACHINE CAMS

Effect of Cutting Speed on Cam Design — General Method of Designing Cams — Laying Out Cams for a Specific Operation — Development of Cam Lobe for Controlling Movement of Threading Die — Allowance for Tool Clearance — Use of Cam-lever Templets — Laying Out Cams for Recessing — Cam Rise for Drilling — Designing Cams for Deep-hole Drilling.......................... 224–257

Chapter VIII

OPERATIONS ON SINGLE- AND MULTIPLE-SPINDLE SCREW MACHINES

Examples of Forming Operations — Recessing — Drilling and Counterboring from Cross-slide — Making Watch Parts in Screw Machine — Examples of Work on the Cleveland Automatic — Operations on Acme Multiple-spindle Machine — Use of Screw Machine for Producing and Assembling Parts — Thread Rolling in the Screw Machine — Different Types of Tools for Thread Rolling — Cutting Helical Gears in Screw Machine — Speeds and Feeds for Screw Machine Operation 258–335

AUTOMATIC SCREW MACHINES

CHAPTER I

SCREW MACHINE CLASSIFICATION AND DEVELOPMENT

Machine tools which are either automatic or semi-automatic in their operation have replaced many hand-operated tools, especially wherever large numbers of duplicate machine parts are required. There are many different classes of automatic machine tools used at the present time, but the most important class or group is that which originated from the lathe and in which are included the machines designed primarily for turning and boring operations. In this general class there are several distinct types which have their own particular field and also many different designs.

The machines which are dealt with in this treatise are commonly known as *automatic screw machines* because the work for which they were originally designed was the making of screws. This field, however, was soon enlarged to include the making of all kinds of small nuts, washers, pins, collars, etc., and, at the present time, machines of this class are capable of a great variety of operations, not only on parts which are turned from bars of stock, but on separate castings or forgings when magazine feeding attachments are employed. It is evident, therefore, that the term "screw machine" as applied to modern machines of this type is a misnomer, because the making of screws constitutes only a small part of screw machine production. While the smaller machines are naturally adapted to making various kinds of standard and special screws, in many shops and factories they are used almost exclusively on other classes of work. The term "screw machine" is even less accurate or descriptive when applied to the large automatic machines now used extensively for general bar and chuck work, in direct competition with the semi-automatic and hand-operated turret lathes; in fact, some manufacturers of such machines do not list them as screw machines, but as automatic machines, automatic turret lathes, or simply as "automatics."

Application of the Term "Automatic." — The term "automatic," as applied to various classes of machine tools, does not always have the same meaning, and a machine which one manufacturer classifies as automatic would be considered semi-automatic by another manufacturer. For instance, some machines which are designed to perform a certain cycle of operations, but are not capable of presenting unfinished parts to be operated upon to the tools, may be referred to as automatic machines. While such a machine is automatic or self-moving, in that it controls the movements of the cutting tools, the attention of an operator is required when each part is completed, so that such a machine is really semi-automatic. There are other types of machines, such as the automatic screw machines, which not only control all the movements of the cutting tools, but are equipped with work-feeding mechanisms so that, when one part has been finished, other duplicate parts may be produced automatically. The operation of such a machine is continuous until it needs to be supplied with raw material, which may either be in the form of bar stock, or separate castings or forgings, when a magazine feeding attachment is used. A machine of this type is automatic in the sense that it repeatedly performs all of the necessary operations, which include ejecting the finished work and presenting a new piece or length of stock to the tool.

From the foregoing, it will be seen that the term "automatic" is a relative one as applied to machine tools generally. The early designs of lathes, after they had been equipped with self-feeding mechanisms, were automatic to the extent of feeding the turning tool. As automatic feeds became the rule rather than the exception, and as additional automatic features were incorporated in the designs of many machines, the use of the term "automatic" was no longer justified in the case of a machine which simply had a feeding mechanism. According to present usage, the term "automatic" is generally applied to machine tools in which practically all of the movements are self-actuating, although, as previously mentioned, the extent of the automatic operation varies considerably on different machines which are classified as automatic types. When a machine is capable of automatically producing duplicate parts repeatedly, it is universally referred to as automatic, whereas, if it simply performs a complete cycle of machining operations, but requires the attention of an operator each time a part is finished, it may be considered automatic by some, and semi-automatic by others. In some cases, a machine of the latter class is termed "automatic," while one that is capable of continuous operation is known as "fully automatic." In American shop parlance, the term "automatic" is often used as a noun to indicate any kind of automatic turning machine, especially a screw machine or automatic chucking and turning machine of the turret lathe class.

General Features of Automatic Screw Machines. — Characteristic features of automatic screw machines in general are means for automatically locating successive tools in the correct working position, the automatic changing of feeds and speeds to secure economical operation, and the presenting of new stock to the tools for a similar series of operations. These various movements, which are entirely automatic, are obtained principally from cams which are rotated at predetermined speeds and are so formed and set, relative to one another, that the parts of the machine which they control all operate at the proper time and at suitable feeds or speeds.

There are two general methods of presenting new stock or raw material to the tools so that the machine can produce duplicate parts automatically. In most cases, the stock is in the form of a bar which is large enough in diameter to allow for making parts of the required size. This bar is held in the hollow rotating spindle of the machine and, as soon as the tools have finished one part, the bar is automatically pushed forward far enough for making another piece. After the bar is fed forward, it is held firmly by a suitable chuck in the end of the spindle and the different tools advance in the proper order, perform their respective machining operations, and then recede. When the finished piece has been cut from the bar, the latter is again pushed forward against a stop which regulates the distance that it projects beyond the chuck, and the cycle of operations is repeated until the entire bar has been used and changed into the finished product. The attendant, who is able to care for quite a number of machines, then inserts a new bar.

While most of the parts produced in automatic screw machines are made from bar stock, many castings and drop-forgings may also be finished in machines of this class. When each part is a separate unit, some auxiliary feeding mechanism must be employed for automatically inserting the rough pieces into the chuck, preparatory to the machining operations. These magazine feeding mechanisms or attachments are loaded or filled with the parts that require machining and are so designed and adjusted that a rough piece is transferred from the magazine to the spindle chuck, after the tools have completed their work and the part finished previously has been ejected. These magazine feeding attachments vary in design, according to the shape of the work and the nature of the machining operation. Magazine attachments are used for that class of work which cannot be produced profitably from bar stock, either because of irregularity of shape or the amount of material which would have to be removed.

Classification of Automatic Screw Machines. — There are two general classes of automatic screw machines, known as *single-spindle* and *multiple-spindle* types, respectively. The single-spindle machines operate on one part at a time, as there is only one work-holding spindle. For instance, when operating on a bar of stock, the tools perform whatever turning, drilling, reaming, counterboring, threading, or other operations may be necessary, and then the finished piece is cut off; hence, the time required to complete a part on a single-spindle machine is equal to the total time necessary for all of the separate operations, which includes the time for withdrawing the tools at the completion of the various cuts, indexing the turret which holds the tools, and presenting the succeeding tools to the work.

The multiple-spindle machine is designed to operate on several parts at the same time. Thus, if a four-spindle machine is turning parts from bar stock, each spindle holds and rotates a bar which is operated upon by one or more tools, and the spindle carrier or head indexes or turns one-fourth revolution as the tools at the four positions or stations recede after completing their work. With this arrangement, each bar is successively located in front of the different tools and a part is finished at each indexing. It is evident, therefore, that a multiple-spindle machine is practically several machines contained in one unit, and the total time required to complete a part is equal to the time necessary for the longest single operation plus the time for the idle movements. In some cases, the time may be reduced considerably by dividing the longest operation into two operations. For instance, when a comparatively long length needs to be turned, instead of using one box-tool, the cut is often divided between two tools held in the first and second positions. The drilling of a rather deep hole is frequently divided in the same way, by using two or three drills located in different positions.

Development of Single-spindle Machine. — The screw machine was developed to a state of practical usefulness principally by Christopher M. Spencer. With the introduction of the original Spencer automatic screw machine in the early eighties began the extensive use of "automatics" as an important factor in modern machine-shop practice. This machine was simply a small turret lathe or "screw machine" fitted with a modified form of the Parkhurst wire or rod feed; but the various motions usually operated by hand were controlled instead from various cams on a single camshaft, extending under the machine for its whole length.

Changes in feed and length of cut were made by changes in simple strap cams. The time taken for the idle movements was shortened by giving a quick movement to the camshaft, automatically changing to the slow feeding movement when the cutting tools approached the work. Machines of practically the original design are still in successful use.

The first automatic screw machine to depart from the Spencer type was the one built by the Brown & Sharpe Manufacturing Co. This machine employs disk cams, which are usually special for the particular piece being made. Unlike the Spencer machine, these cams have a rotating motion at a uniform speed, all the idle movements being operated by intermittent clutch connections with a fast-running controlling shaft. The machine is noted for its accuracy and for the quickness of its motions and is familiar to all screw-machine specialists. As is the case with most of the modern machines, it may be fitted with various automatic attachments for milling, cross-milling, screw slotting, etc.

The automatic field has been greatly extended by the development of the heavier class of automatic machines, such as the Gridley, Cleveland, and Chicago, which have made it possible to produce comparatively large work that formerly could only be done on an engine lathe or that type of turret lathe designed for handling bar stock.

Development of Multiple-spindle Machine. — While the machines previously referred to have led in widening the field of the "automatic," there has been another line of development which has greatly increased production in those classes of work for which screw machines were first used. This is the multiple-spindle automatic screw machine which was originated by Reinhold-Hackewessell and E. C. Henn. The first successful design was built by the National Acme Mfg. Co. In this machine, the turret is dispensed with, and its place is taken by a tool-holder which feeds tools forward to operate on bars of stock held in four opposing work-spindles. It is a drum or carrier containing these spindles which "indexes," instead of the tool-holder or turret. After the tool-holder has concluded its working stroke and retired, the work-spindle carrier or head is revolved, bringing each bar of stock to the next tool in rotation. The final tool position provides for a cut-off blade, and a complete piece is finished and cut off at each indexing. One or more forming slides also operate at the different spindle positions if necessary. With this type of machine, all the cutting tools are working on each feeding stroke, as each has a bar of stock presented to it, whereas, with a single-spindle machine, the various tools of the turret operate successively on a single bar of stock.

Among other well-known designs of multiple-spindle machines may be mentioned the Davenport, Gridley, New Britain, and the Hayden machines. These various designs, which will be described later, each possess distinctive features and represent ingenious examples of modern machine-tool development.

General Application of Automatic Screw Machines. — Automatic screw machines are used for such a variety of operations that only a general outline of the work for which they are adapted can be given. As previously mentioned, machines of this class are designed primarily for producing parts from bars of stock, although by the addition of auxiliary attachments they may also be used for machining separate forgings or castings. The work done on a screw machine usually involves such operations as turning, drilling, reaming, boring, recessing, counterboring, and threading. In order to avoid a secondary operation on another machine, attachments are also used which enable special operations to be performed. For instance, if a screw or pin requires a hole drilled through the head in a cross-wise direction, a cross-drilling attachment is used. There are also attachments for cutting the slots in screw-heads after the screws have been turned and threaded by the regular mechanism and tool equipment of the machine, and other ingenious attachments have been designed to increase the range of automatic screw machines and make it possible to completely finish parts on them in one series of operations. These attachments are separate units and are applied to the machine in such a way that they operate in conjunction with the regular tools.

The extent of the tool equipment and its cost naturally depends upon the nature of the work. For many operations, only standard tools, such as box-tools, reamers, dies, etc., are necessary. Frequently an additional special tool is needed, such as a forming tool for turning the head of a pin or screw to an irregular shape, and sometimes several special tools are necessary. The cost of the tool equipment for producing a certain part is often an important item. When a very large number of duplicate parts are required, expense for special tools is of less importance than when a relatively small number of pieces are to be made. In many cases, it is difficult to decide whether an automatic screw machine should be used, or some other machine, such as a semi-automatic turret lathe or a hand-operated turret lathe or screw machine. It is important to consider the number of parts required and the relation between the higher rate of production obtained with the automatic machine, the relative cost of tools for each machine, and the time necessary for adjusting or setting up the machine. A general idea of the different points that should be considered in determining the conditions favorable to the use of automatic screw machines may be obtained by studying the various machines, tools, attachments, and operations referred to in the following chapters.

Advantages of Single- and Multiple-spindle Designs. — The difference in the rate of production between the single- and multiple-spindle types of screw machines varies considerably on different classes of work. When comparing the two types, there are two important points to be considered; 1. The relative rates of production for the general class of work required. 2. The degree of accuracy necessary in connection with the finished product. In general, multiple-spindle machines are greatly superior so far as rate of production is concerned, but as a general rule they are not capable of such extremely accurate results as well-designed and carefully constructed single-spindle machines. While well-built multiple-spindle machines will produce very accurate work, it is generally considered impracticable in a commercial machine to secure the same degree of accuracy as with a single-spindle design, assuming that each type of machine is constructed in accordance with approved methods. It is more difficult to secure accurate indexing with multiple-spindle machines than with the single-spindle types, because of the greater mechanical difficulties of constructing a machine having several spindles which are equally spaced and equi-distant from the axis of the spindle carrier. In order to overcome any slight inaccuracies which may exist, ingenious methods of locating the spindle carriers have been devised and the degree of accuracy obtainable on high-grade machines of multiple-spindle design, is sufficient for all except the most exacting work.

Each type of machine has its own field, although it is impossible to draw a definite line which indicates just where one type is superior to the other. The rate of production is not always in favor of the multiple-spindle design. For instance, when turning small brass parts, etc., a very fast spindle speed is required to secure an efficient cutting speed, and a light single-spindle machine is especially adapted to fast speeds, whereas, with the multiple-spindle type, it is not practicable to operate the spindles so rapidly, because of the geared drive to each spindle; consequently, for a given rate of feed, the tools on a high-speed, single-spindle machine cut faster and also withdraw and index with great rapidity. With a multiple-spindle machine, the indexing movements are somewhat slower because all of the work spindles, the spindle carrier, and the bars of stock must be indexed, and, owing to their combined weight, there is considerable inertia to overcome when the indexing movement is started and it is also necessary to arrest the movement of the spindle head without injurious shocks; hence a slower indexing movement is necessary. When turning brass or small steel parts, especially when there are no long operations, such as turning long surfaces or drilling deep holes, and the idle time represents a comparatively large percentage of the total time, the importance of rapid movements is apparent, and while the single-spindle machine must index for locating each turret tool, whereas with the multiple-spindle machine a part is completed for each indexing movement, this handicap is overcome on some classes of work. When there are long turning or drilling operations, or in case considerable material must be removed by forming tools, the multiple-spindle design has a decided advantage as compared with the single-spindle type, because the tools all operate together and the time for the longest operation can be reduced one-half by using two tools simultaneously.

The advantages of each type, as outlined in the foregoing, are subject to wide variations, owing to differences in the design, the size of the machines, and the nature of the work. For instance, some multiple-spindle machines are designed especially for small work and index very rapidly, one well-known make requiring only one second for the indexing movement, during which time the chucks are opened, the stock fed forward against a stop, the chucks closed, and the feed-tube drawn back ready for the next feeding movement. The maximum capacity of this machine is for ½-inch round stock. Multiple-spindle machines of larger sizes require more time for indexing. The single-spindle type covers a much wider range of work as to size, some machines being adapted to the turning of small watch and clock parts, whereas others are capable of handling bars of stock 6 or 7 inches in diameter; in fact, one single-spindle machine (the Cleveland Automatic) has a maximum capacity of 7¾ inches.

CHAPTER II

SINGLE-SPINDLE AUTOMATIC SCREW MACHINES

AUTOMATIC screw machines, in common with all machines of the self-acting type, are naturally more complicated than those types which require a certain amount of hand-manipulation, and, in order to understand the methods of adjusting and using such machines, it is essential to know just how the automatic action is obtained. While the automatic screw machines made by different manufacturers all differ in regard to details of design, the general principle upon which machines of the same class operate is practically the same in each case. The different methods of controlling the various movements and adjustments for the tools, however, differ considerably on some machines, and a study of these important features will prove of value to anyone desiring a knowledge of screw-machine construction and operation. In this chapter, representative types of single-spindle automatic screw machines are described. Other machines of the multiple-spindle design are referred to in the following chapter.

Brown & Sharpe Automatic Screw Machines. — The automatic screw machine shown in Fig. 1 is made by the Brown & Sharpe Mfg. Co. and is intended for comparatively small work. The bar of stock to be operated upon is inserted through the hollow spindle of the machine. This spindle is driven from an overhead countershaft by means of open and cross belts operating on the friction pulleys *A* and *B*. When one pulley is engaged by the clutch, a forward movement for turning operations is obtained, and a reverse movement for backing off a die when threading is secured when the other pulley is engaged. For ordinary operations, the necessary tools are held in the turret *I* and on front and rear cross-slides at *E*.

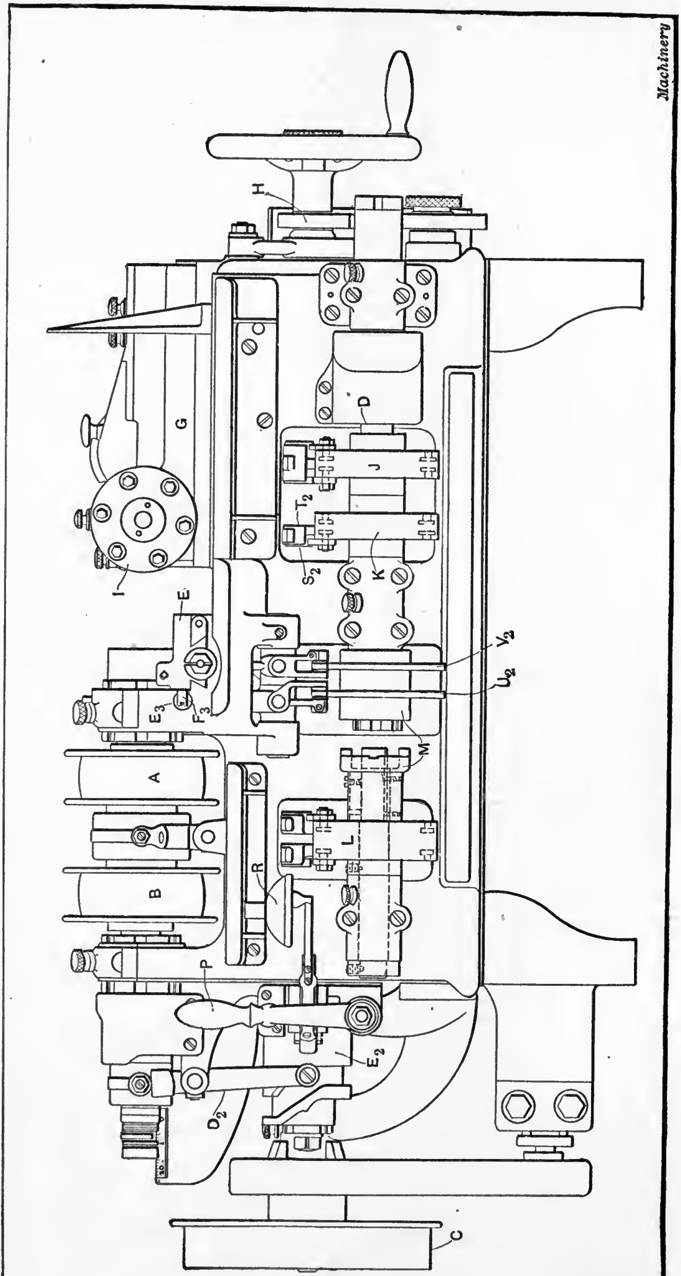

Fig. 1. Front Elevation of the No. 00 Brown & Sharpe Automatic Screw Machine

There are six holes in the turret and all or part of these holes may contain tools, the number depending, of course, upon the extent of the operations. A stop for regulating the distance that the stock is fed through the spindle after each finished part is severed from the bar is held in the turret and, in addition, such tools as a hollow mill, a box-tool, a threading die, etc. In case a forming operation is necessary, the forming tool is held on one cross-slide and the cutting-off tool on the other.

All feeds and other movements of the machine, except the rotation of the spindle, are derived from the feed-shaft O_3 (Fig. 2) at the rear of the machine, which, in turn, is driven by a belt from an overhead countershaft operating on pulley C. All of the operations are timed or regulated from camshafts on the front and end of the bed. These shafts are driven from the constant-speed feed-shaft O_3 at the rear, through a worm-wheel and change-gears H located at the end of the bed. By means of these change-gears, the duration of the cycle of operations, or the length of time required to make one piece, is positively regulated. The operations of feeding the stock, reversing the spindle, and indexing the turret are regulated by trip dogs or carriers on the camshaft D at the front of the machine, the adjustment of the dogs serving to accurately time the successive operations. These dogs operate levers which extend through the machine bed to the rear shaft O_3, where they connect with and operate positive clutches at the right time. The tripping of a lever by a dog engages the corresponding clutch, thus causing gears or a face-cam to revolve with the feed-shaft O_3. In this way, motion is obtained for performing a certain operation, and then the clutch automatically releases. If more work is to be done than can be performed by a single operation, such as feeding extra lengths of stock or passing empty holes in the turret, several dogs or a special dog can be used so that the same operation is performed several times in rapid succession.

The turret-slide and cross-slides are fed to the work by the action of disk cams and levers, each slide having a separate cam or three cams in all. One, two, or sometimes three pieces

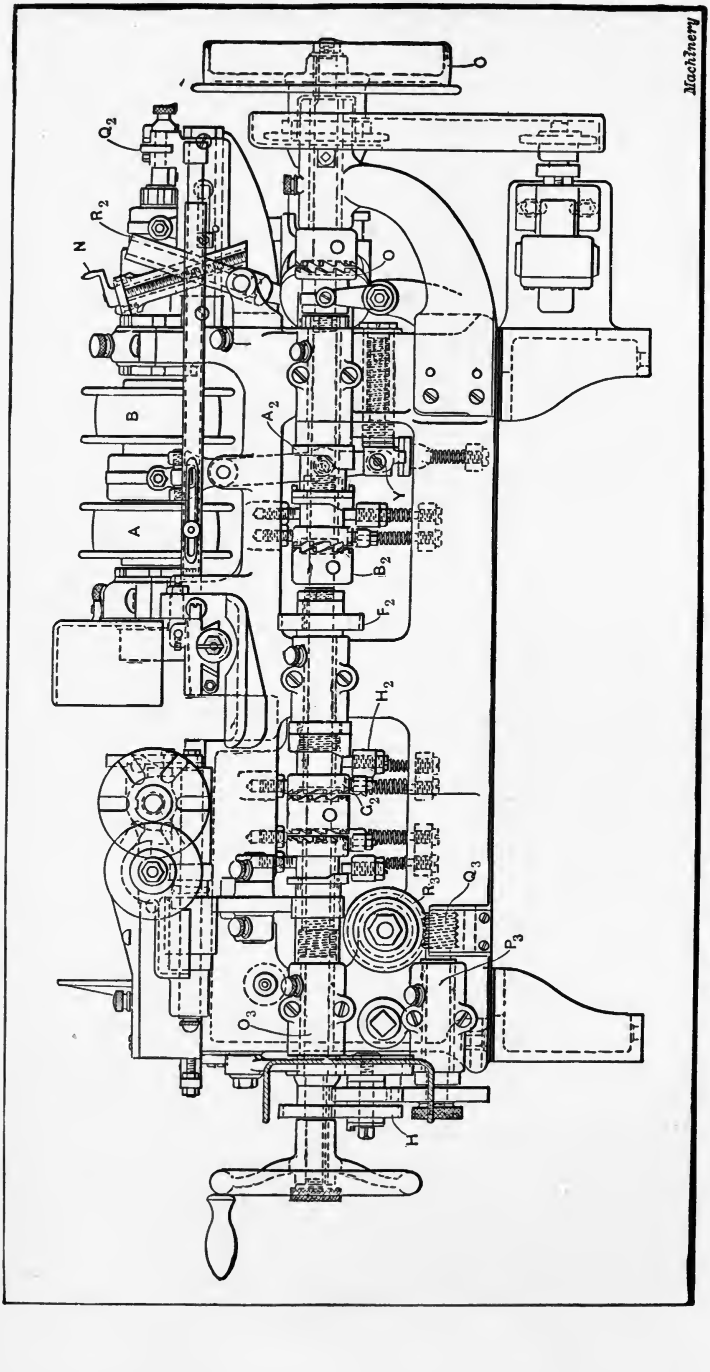

Fig. 2. Rear Elevation of the No. 00 Brown & Sharpe Automatic Screw Machine

of work are completed in one revolution of a cam so that the various movements of one of the slides, in making a particular piece, are laid out as curves around the cam; the curves for one piece include the whole circumference, whereas for two or three pieces they are repeated. Special cams are required for each job, and these must be laid out in accordance with the nature of the work, as described in Chapter VII.

Stock-feeding and Chuck-operating Mechanism. — The stock is automatically advanced through the spindle after successive parts have been formed and cut off in the machine shown in Fig. 1, by means of a feed-tube extending through the spindle. This feed-tube has spring-feeding fingers that are located at the rear of the collet chuck. The tube may be withdrawn and the fingers readily changed for different sizes of stock. The motion for feeding the stock is derived from cam E_2 (Fig. 1). This cam actuates a slide through a lever that engages a block that may be adjusted by crank N (Fig. 2) for varying the feeding movement. The feed-tube is connected to the slide by means of a latch that may be raised, thus allowing the feed to remain idle or the tube to be withdrawn.

The opening and closing of the collet is controlled by another cam surface on cam E_2. The action of this cam is controlled by dogs on drum K which serve to engage or disengage a clutch through which the cam is rotated. When the chuck is closed upon the stock, the feeding fingers are withdrawn preparatory to the next forward feeding movement. The feeding mechanism derives its motion from the rear shaft O_3 (Fig. 2) through spur gearing at F_2.

Operation of the Cross-slides. — The front and rear cross-slides are independent and may be used together or separately. They are operated by disk or plate cams U_2 and V_2 mounted on the front camshaft D, Fig. 1. The front cross-slide is operated by segment lever W_2, Fig. 3, the teeth of which mesh with rack Y_2. This rack is threaded on one end and has an adjusting nut A_3 which is used for changing the position of the cross-slide relative to the center of the spindle. The rear cross-slide is operated through a double lever or segment gear B_3, which connects with a rack, as the illustration shows. The cross-slides are made to travel to exactly the same point by set-screws C_3, which come into contact with stops D_3. The cross-slide tools are circular in form and are attached to suitable holders by screw I_3.

Operation of the Turret-slide. — The turret I, Fig. 1, which carries the end-working tools, is mounted in a vertical plane so that it rotates about a horizontal axis. This position allows the tools to work closely in between the cross-slide tools with a minimum of overhang, and the idle tools do not interfere with the cross-slide. The turret-slide is mounted directly on the machine bed and the turret is rotated or indexed to bring the different tools into the working position, by means of hardened roll C_4 (Fig. 4) attached to disk D_4. This roll engages radial grooves in the disk E_4. The disk D_4

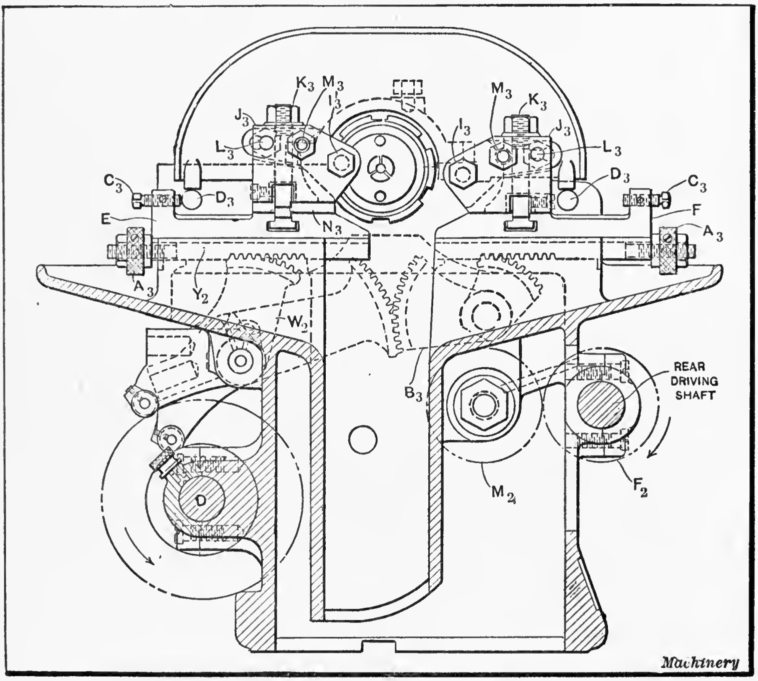

Fig. 3. Partial Section of No. 00 Machine showing Mechanism for Operating Cross-slides

is driven from the rear driving shaft through spur and helical gearing, and makes six revolutions for every revolution of the turret.

The turret is locked in position by the hardened taper plug J_4 which is operated by latch L_4, controlled by a cam M_4

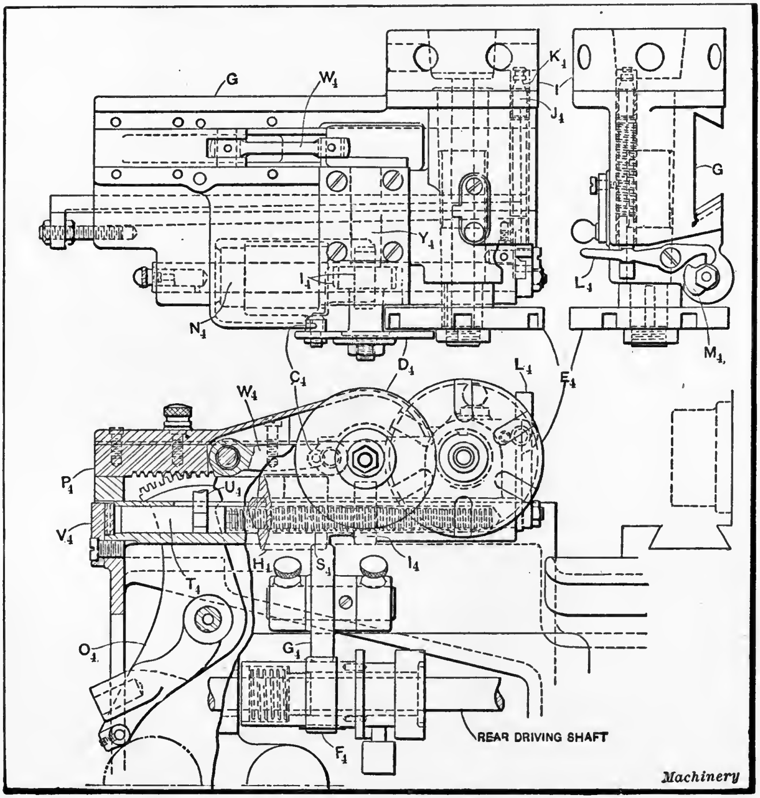

Fig. 4. Plan and Rear Elevation of Turret-slide and its Operating Mechanism

on the end of shaft N_4. The slide G carrying the turret receives its forward movement through a "lead cam" which transmits motion through the segment lever O_4. The shaft carrying the lead cam is driven from the rear driving shaft through worm and spur gearing. The turret-slide is returned by a coil spring S_4. The rapid return and advance of the turret-slide and the indexing of the turret are controlled independently of the lead cam by a crank W_4 which is connected eccentrically to the turret revolving shaft Y_4. This crank indexes the turret while the roll on the bell crank lever O_4 is passing from the highest point of the lead cam to the starting point of the lobe for the next cut. Crank W_4 is driven from the rear driving shaft by a positive clutch, the latter being operated by tripping levers and dogs on drum *J*, Fig. 1.

Automatic Spindle Speed Changes. — The speed changes for the spindle are made by shifting a belt on cone-pulleys forming part of the overhead works. For each change so obtained on the two larger machines, two spindle speeds are available, one of which is fast and one slow. The change is made automatically and is controlled by an adjustable trip dog. This automatic change of speed is of especial value in threading, one speed being employed for turning and a slower speed for cutting the thread.

Operation of the Deflector. — In order to separate the chips and oil from the finished parts which are cut off from the bar, a deflector is used. This deflector is located on the end of a lever that is actuated by a cam-block mounted on the drum *K*, Fig. 1. Before the finished part is severed, this cam-block causes the deflector to move under the chute of the machine so that, when the work falls, it strikes the deflector and enters a suitable receptacle, instead of falling into the pan containing the chips.

Reversal of Spindle for Threading. — The reversal of the spindle for backing off a die or removing a tap from a hole is obtained by means of a clutch mechanism, located between the two belt pulleys *A* and *B*, which revolve in opposite directions. The clutch bodies, which are conical, are forced into conical seats in the pulleys by a sliding collar located between the clutch bodies on the spindle. This collar is operated by a lever and cam beneath the spindle. On the No. 00 machine, the spindle is reversed by means of a spring plunger *Y*, Fig. 2, and on the Nos. 0 and 2 machines, by a cam A_2. The spring plunger *Y*, when released, instantly engages the cone of the clutch with pulley *A*, thus rotating the spindle backward.

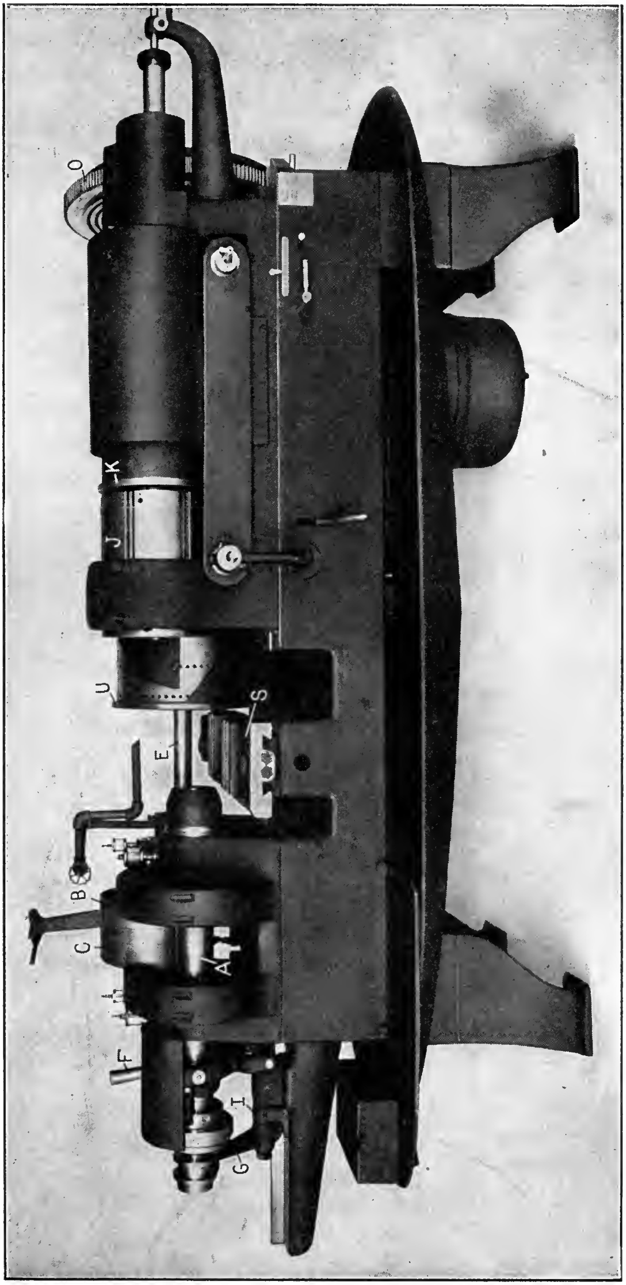

Fig. 5. Front View of $3\frac{1}{4}$-inch Cleveland Automatic Screw Machine

To run forward, the clutch is shifted by the cam A_2, to engage pulley B, which revolves in the opposite direction. This cam A_2 is actuated by clutch B_2 which is operated by a lever that is controlled by a dog held on drum L on the front camshaft. Several sets of trip dogs can be used on the drum or carrier for reversing the spindle, when more than one thread is desired on a piece. The carrier for controlling the reverse movement may be disconnected by pulling out a knob, thus allowing it to remain idle when work is to be done which does not require threading.

The Cleveland Automatic Machine. — The automatic screw machines which were originally designed for making small screws and later for miscellaneous small parts have led to the development of automatic machines capable of turning an endless variety of comparatively large and heavy parts. One of the Cleveland automatic machines is shown in Figs. 5 and 6. This particular machine will operate on bar stock $3\frac{1}{4}$ inches in diameter, and similar designs are built in various sizes, one of which has a chuck capacity of $7\frac{3}{4}$ inches.

In addition to the full automatic type shown in Figs. 5 and 6, which is known as "Model A," the Cleveland automatic is also built in several other types. The "full automatic" machine is provided with a turret having five holes, on sizes from $\frac{3}{8}$ to $2\frac{1}{4}$ inches, inclusive, and six holes on the machines of greater capacities. The next type of machine is the plain automatic, known as "Model B." This machine has no turret, but is provided with one tool spindle which can be used for holding a box-tool, drill, or similar tools. The range of this machine can be greatly increased by the addition of simple attachments on the cross-slides and tool spindle. The Model C machine is of the full automatic type and is halfway between Models A and B. It is provided with only three holes in the turret and resembles Model B in construction. The type of machine known as "Model D" is similar to Model *A*, but is built to handle castings, forgings, etc., and is semi-automatic in its operation. The double-spindle, plain automatic is a modification of the plain machine and is provided

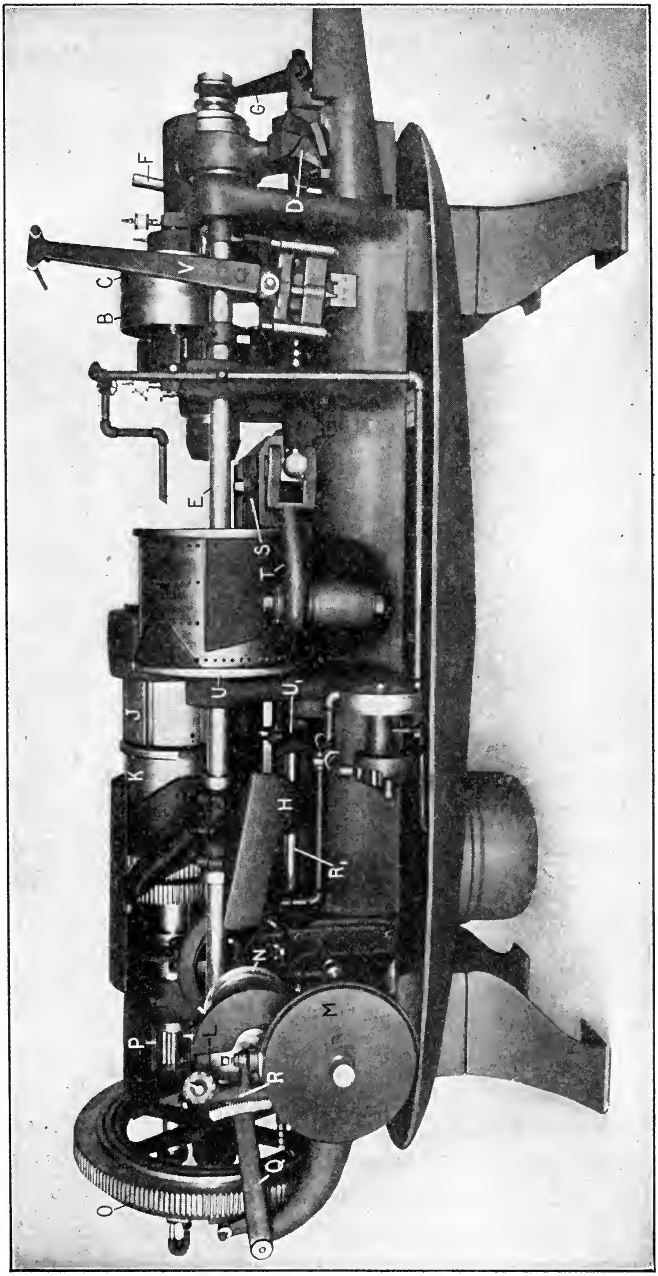

Fig. 6. Rear View of the Cleveland Automatic Screw Machine

with two opposing work-spindles located in a parallel line and with the chuck mechanism of both heads acting simultaneously. This machine is particularly adapted for finishing both ends of a piece of work, thus obviating the necessity of a second operation to complete the part.

Spindle Driving Mechanism. — The work-spindle *A* of the machine shown in Figs. 5 and 6 is driven from the overhead countershaft by means of two pulleys, *B* and *C*, which transmit motion to the spindle through gearing. Between the pulleys *B* and *C* there is a loose or idler pulley. The outer pulleys *B* and *C* may both be rotated in one direction, thus giving two speeds, or one may be given a reverse movement for threading operations. The shifting of the driving belt from one pulley to another is effected by a belt shifter *V*. The shifting device is operated by means of cam fingers I_1 (see Fig. 8) which are carried on the rear shaft *E* and are adjustable. As the shaft rotates, these fingers alternately come into contact with spring-operated plungers which are depressed and serve to withdraw a wedge from a slot in a plate located below the shifting device. When the wedge is withdrawn from one slot in the plate, the shifter is thrown so that the wedge engages the next slot, thus shifting the belt or belts, as the case may be. There are different combinations of these shifter arms for various types of belt drives.

Chuck-operating Mechanism. — The chuck F_1, Fig. 7, is of the push type and is held in the cap G_1 screwed onto the nose of the work-spindle. It is operated by a sleeve H_1 that receives motion from the arm *D* (see also Fig. 9). A detail of this arm is shown in Fig. 10, which illustrates its adjustable features. This arm is provided with adjustable cams *m*, *n*, and *o*. The cam *m* is the chuck-opening cam, *n* the safety cam, and *o* the chuck-closing cam which is cast integral with the arm *D*. Cams *m* and *n* are on one casting and are adjustable on the arm *D*, being held in the desired position by three clamping screws fitting in elongated slots. There are also additional tapped holes in the arm allowing for further adjustment.

When smooth stock is being held in the chuck, the adjust-

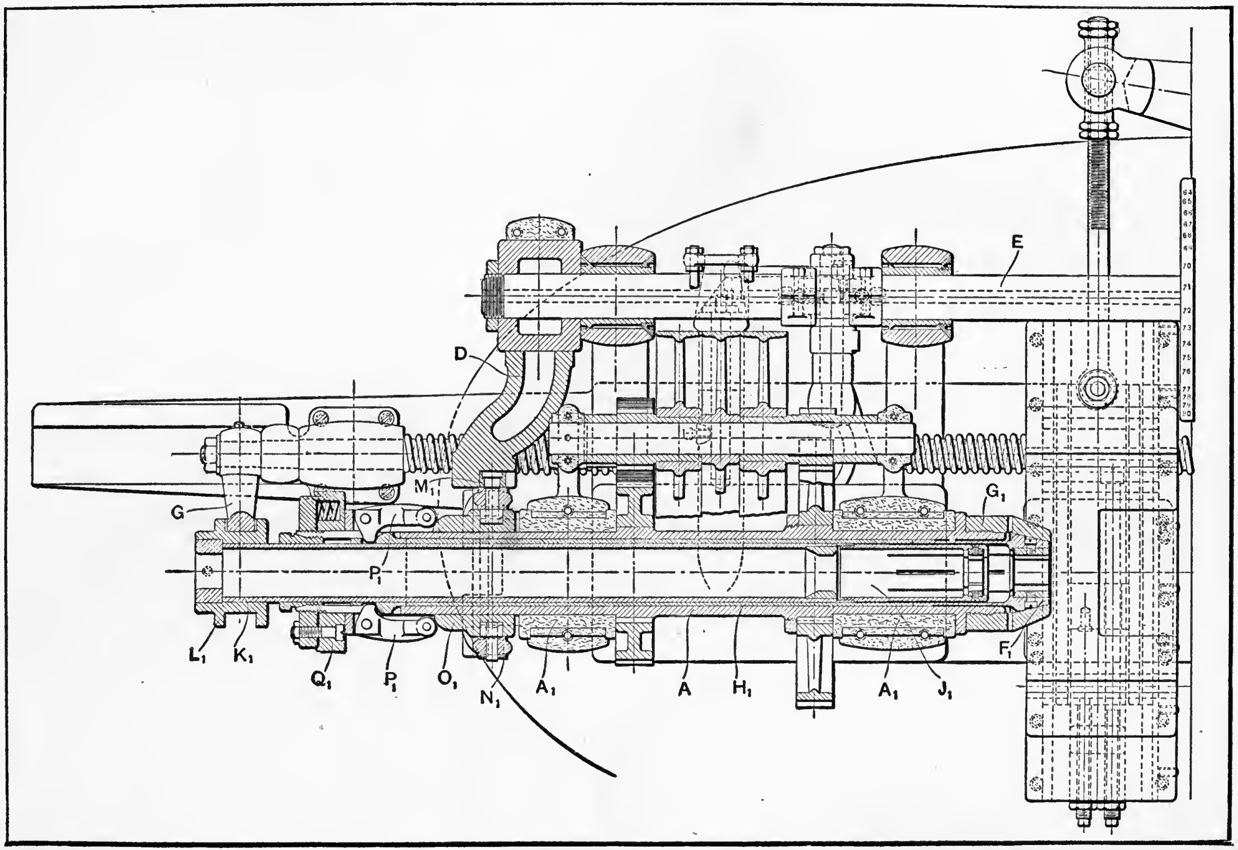

Fig. 7. Sectional Plan View of Cleveland Machine showing Mechanisms for Driving Spindle, Feeding Stock, and Operating Chuck

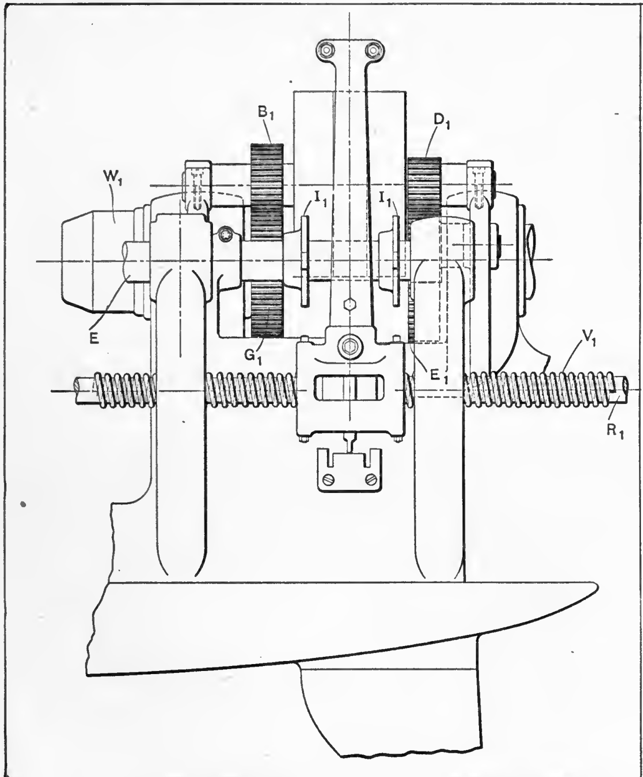

Fig. 8. Rear Elevation of Work-spindle End of Machine showing Drive and Belt-shifting Arrangement

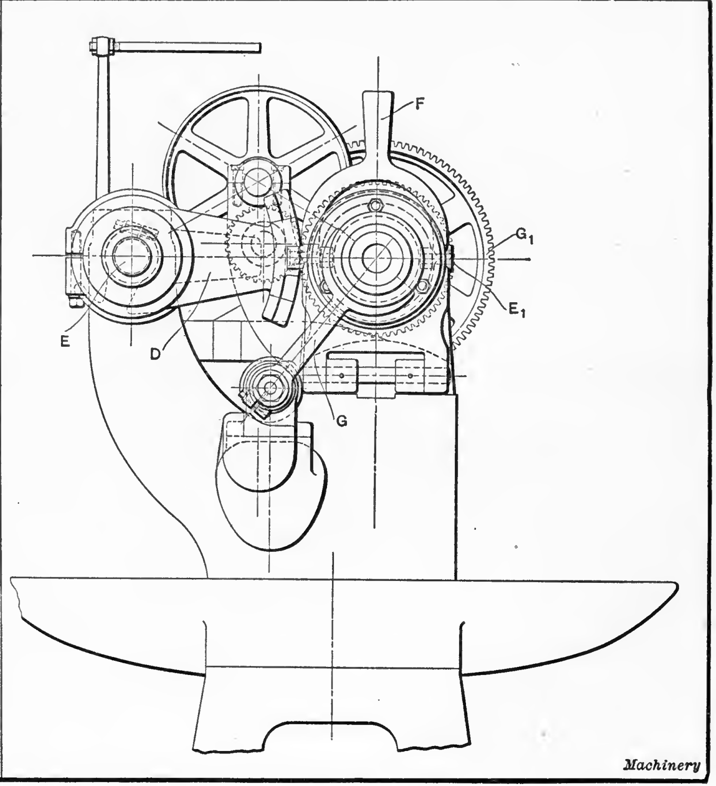

Machinery

Fig. 9. End Elevation showing Chuck-closing and Stock-feeding Mechanism

able cams m and n are set tightly up against cam o, thus giving a quick closing and opening action to the chuck and allowing a short space of time for feeding the stock. When rough bar stock is being handled, and for magazine work, it is necessary to keep the chuck open much longer; for this action the cams m and n are separated from cam o in order to allow additional time.

Fig. 10. Adjustable Cam for Controlling Operation of Chuck

The action of closing the chuck is as follows: As arm D rotates, cam m comes in contact with roll M_1, Fig. 7, held on the fulcrumed yoke N_1. This yoke carries two rolls that work in a circular groove cut in sleeve O_1. As the cam forces this sleeve away from the chuck, the sleeve acts upon two fingers P_1 which bear against the rear end of the chuck-closing sleeve H_1. As cam o, Fig. 10, comes into action, it reverses the operation of yoke O_1 and removes the pressure from the sleeve H_1, allowing the chuck to open, due to spring tension.

Stock-feeding Mechanism. — The bar stock is fed through the spindle by a spring finger J_1 (Fig. 7) screwed into the front end of the tube K_1, the rear end of which is provided with a grooved collar L_1. Fitting in this grooved collar is a forked lever G which is carried on the rod R_1 (Fig. 6). The movement of forked lever G is controlled by a cam H, which contacts with a roll held on bracket U_1 clamped to rod R_1. Adjustment for length of feed is controlled by shifting the position of the bracket U_1 along rod R_1, and the timing is effected by shifting the cam H around the shaft E. An open-wound coil spring serves to keep the forked arm G and its sliding bracket up against a stationary bracket when the rod R_1 is not acted upon by the cam. For double feeding, a drum is provided carrying two cams, allowing for feeding the stock twice for every revolution of the camshaft.

Turret and Turret-slide. — The turret is of the drum type and is carried on shaft A_2 (Fig. 11) that is parallel with the work-spindle. The turret on the $3\frac{1}{4}$-inch machine accommodates six tools which are held by two clamping bolts each, in the holes in the front end of the turret, and are located concentrically with the axis of the work-spindle. The turret J is moved forward for cutting and backward for withdrawing the tools, by a cam-drum K which is free to rotate on shaft A_2 and carries segment cams B_2 fastened to its periphery. These cams work against a roller which is held on a stud driven into a hole in the base of the machine. As the cam-drum is rotated by means of gearing, the engagement of the inclined cam grooves or surfaces with the fixed roller cause the drum and turret to move in the direction of their axes, the turret moving in a straight line or without rotation, except when indexing. Cast integral with drum K is a spur gear D_2 which rotates it. Gear D_2 engages pinion E_2, beneath it, which, in turn, is rotated at different speeds for the cutting and idle movements of the machine by a mechanism to be described later.

The turret is indexed upon its back stroke by means of a rod H_2 held adjustably by locking nuts to a spur gear forming part of the feeding mechanism. This rod comes into contact with hardened pins held in the rear face of the turret. Before the turret can be turned around, however, it is necessary to disengage a locking wedge from a slot in the circumference of the turret. This is done by means of a cam-block held on the flange of drum K. The indexing can be effected by hand by simply depressing a lever, which has the same action on the locking wedge as the cam-block held upon the drum K. The turret head is mounted on the bed of the machine and can be adjusted to suit various lengths of work and tools held in the turret. The turret is held to the base of the machine by means

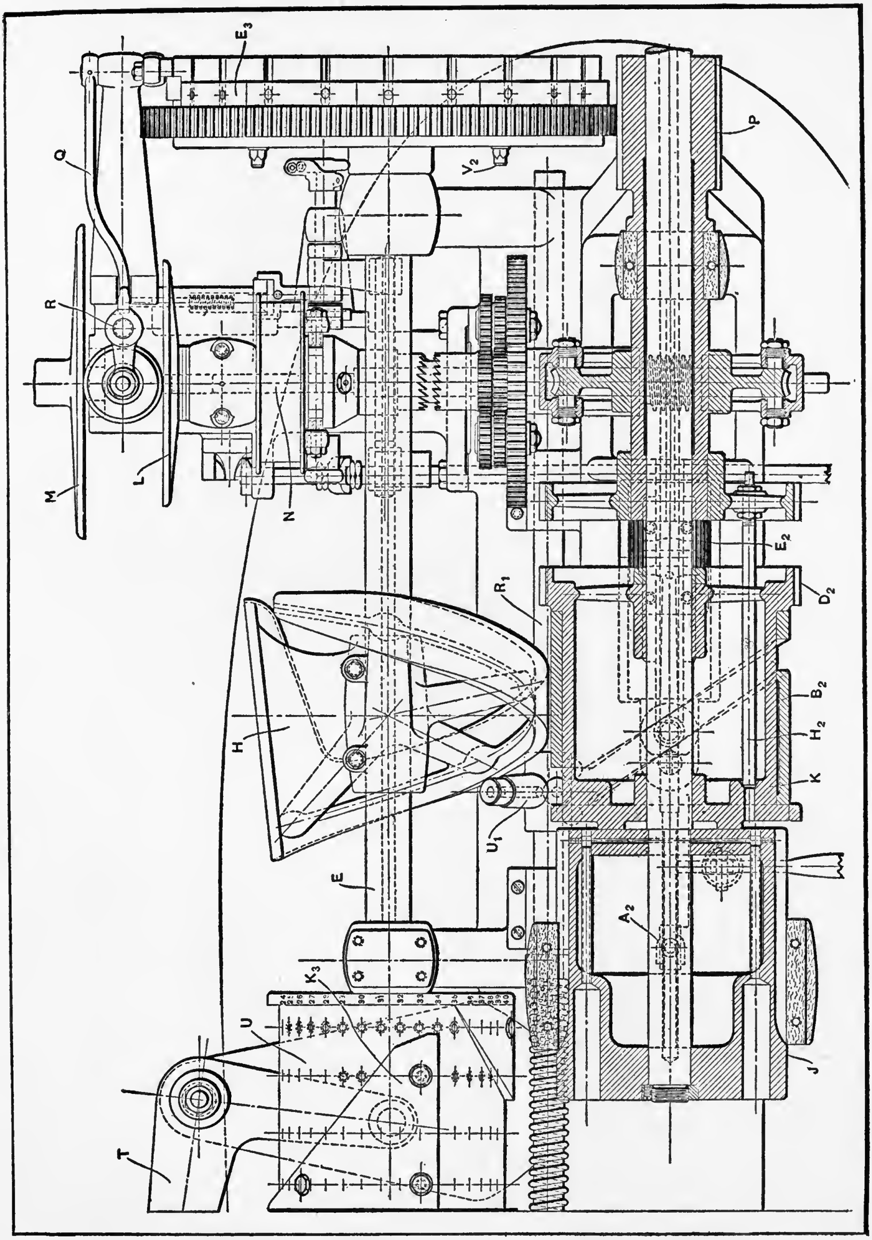

Fig. 11. Sectional Plan View showing Mechanism for Operating Turret and Cross-slide of Cleveland Automatic

of bolts. A scale fastened to the base of the machine and a pointer on the turret-slide enable the operator to obtain the same setting of the turret head when setting up the machine for a part which has been machined previously.

Operation of the Cross-slide. — On the Cleveland automatic screw machine, as regularly equipped, the cross-slide for holding both the rear and front cutting tools consists of one casting, but a double cross-slide can be supplied, when desired. The cross-slide is actuated by means of a fulcrum lever T (Fig. 11), which derives motion from cams K_3 on the drum U carried on the rear shaft E. The flange of this drum is numbered so that the position of the various cams can be recorded on a lay-out card to facilitate re-setting the work. The cross-slide is provided with an adjustable stop-screw so that accurately formed work can be obtained. It is also provided with adjustable gibs to compensate for wear. The position of the cross-slide relative to the axis of the spindle is controlled by regulating nuts on the connecting-rod fastened to the rear of the slide.

Variable Feeding Mechanism. — As the cam-drum K (Fig. 11) is rotated, the turret is moved towards the spindle for bringing the tools into contact with the work, and then backward for withdrawing the tools. This cam-drum is rotated through gearing at a predetermined rate of speed which is controlled by a series of adjustable cams that automatically vary the rate of the turret feeding movement according to the nature of the work. Motion for this variable feeding mechanism is derived from an overhead countershaft by a belt operating on pulley N, which is keyed to an extension of the friction disk L. When a fast movement is required, in order to reduce the non-cutting or idle period to a minimum, a sliding clutch is engaged with pulley N, so that the drive is direct to the worm gearing at the rear of the turret, which transmits motion to the cam-drum K through a spur gear, pinion E_2 and the gear D_2 forming part of the cam-drum. This clutch is operated by means of levers that engage dogs V_2 which are adjustably mounted on the rear face of the regulating drum E_3.

When the turret is to be moved at its slow or cutting speed for feeding the tools forward, the clutch is shifted in the opposite direction by dogs V_2 so that it engages teeth on the extended hub of a pinion which forms the central member of a planetary gear mechanism. The drive from belt pulley *N* to the worm gearing at the rear of the cam-drum is then through friction disks *L* and *M* and a planetary reduction gearing which transmits motion to the worm-shaft and is located adjacent to the worm-wheel, as the illustration shows. This change from fast to slow speed, or *vice versa*, can also be controlled by a handle at the front of the machine.

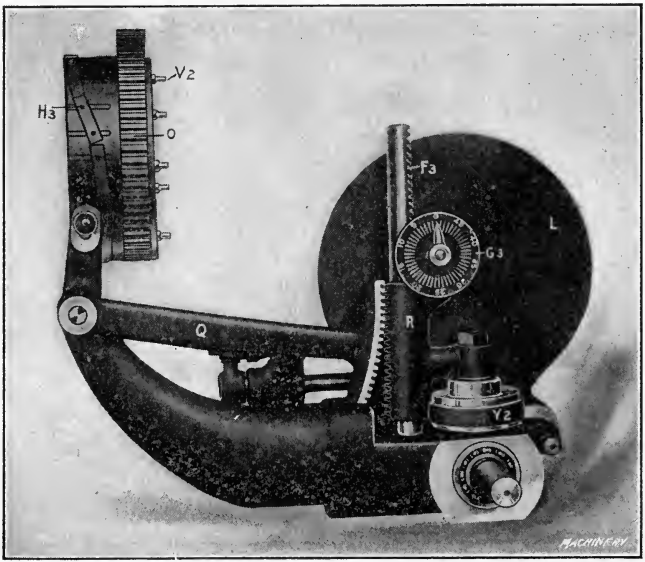

Fig. 12. Detailed View of Automatic Feed-regulating Mechanism

The Feed-regulating Drum. — One of the interesting features of the Cleveland machine is the regulating drum which is used for securing independent feeds for each tool in the turret and on the cross-slide. This regulation is secured by means of a series of adjustable cams mounted upon the periphery of the regulating drum E_3, Fig. 11. By changing the position of these cams, any desired feed may be secured for each tool. As each cam comes into contact with lever *Q*, the position of the roll between friction disks *L* and *M* is changed with reference to the center of the disks, so that the speed is either increased or decreased. The bell crank lever *Q* (Fig. 12) has a segment gear at its outer end the teeth of which mesh with the sliding sleeve *R* on the rod F_3. This rod is held in a bracket attached to the machine. As sleeve *R* is moved up and down by the action of lever *Q*, the position of the roll Y_2 between the two friction disks is changed, thus varying the speed. Variations in the position of the friction roll are transmitted to the pointer of the indicator dial G_3, so that the positions of the different regulating cams for any given job can readily be duplicated, provided their respective positions, as shown by the indicator dial, have been properly recorded. With this arrangement, a wide range of feeds for the turret and cross-slide tools is easily obtained and the feed may also be varied after the machine has been set up for a given job, provided a higher rate is considered essential to economical production.

Gridley Single-spindle Automatic. — The Gridley single-spindle automatic shown in Fig. 13 (built by the Windsor Machine Co.) is designed for handling straight bars of stock up to and including 2¼ inches in diameter, and it will feed lengths through the chuck up to 13½ inches. These machines are also made, at the present time, in two larger sizes for handling bars of stock 3¼ and 4¼ inches in diameter, respectively. The spindle *A*, through which the bar of stock is inserted, is rotated from a parallel shaft at the rear to which it is geared. This rear driving shaft may either be belt-driven or motor-driven. The various end-working tools required are attached to slides *B* on the turret. Forming tools may be held on slide *C* and a cutting-off tool on arm *D*. The movements of these tools and other parts of the machine requiring automatic operation are controlled by cams mounted on the cam-drums *E* and *F*.

The Turret. — The turret of the machine shown in Fig. 13 does not move axially, but it is indexed or rotated part of

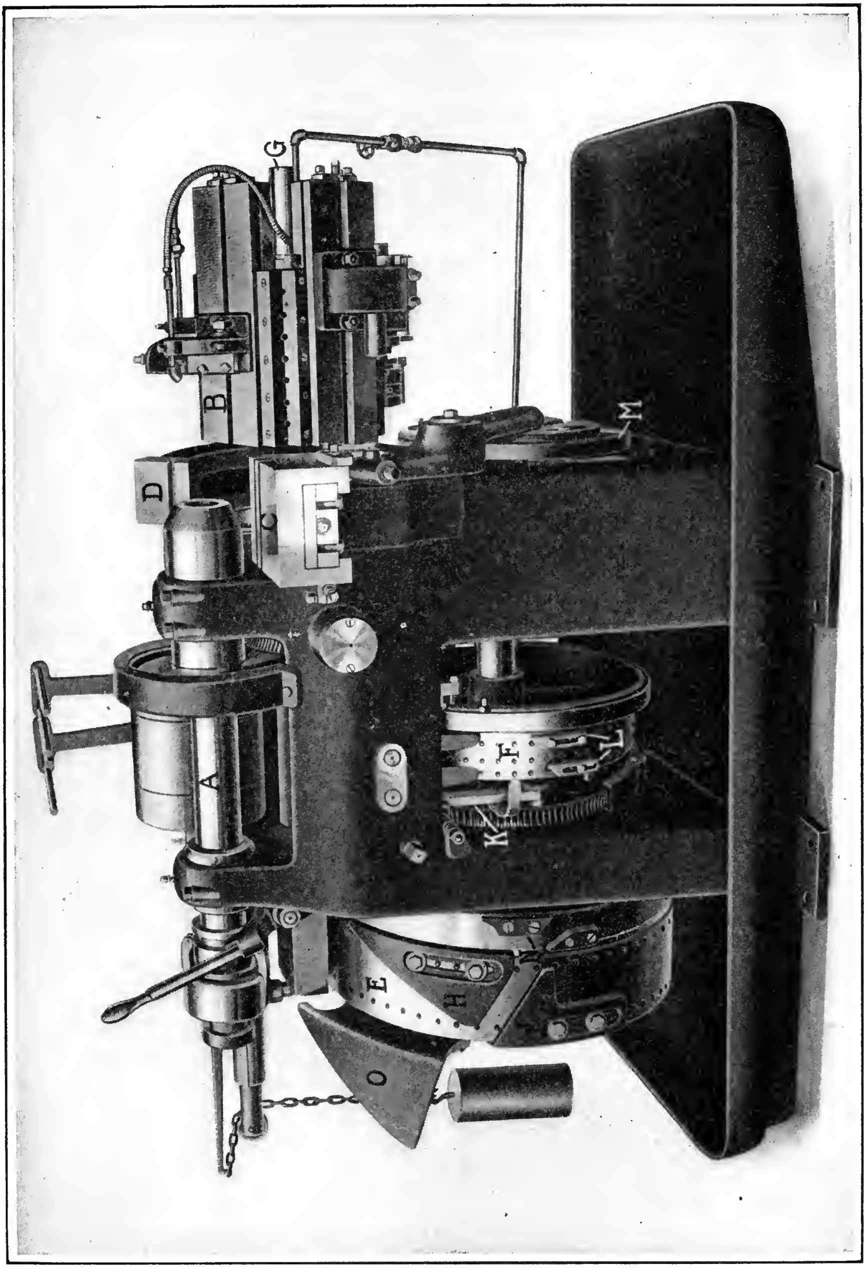

Fig. 13. Gridley Single-spindle Automatic

a revolution after each successive operation has been performed, in order to locate the various tools attached to it in the working position. The tool-slides *B* are given the necessary feeding movement. The axis of the turret is parallel with that of the spindle, but it is lower than the spindle, so that the tools attached to the different slides of the turret will be in alignment with the spindle when indexed to the upper position. This turret revolves in bearings located in both ends of the main frame or headstock of the machine. The turret is revolved by a worm which has an intermittent movement and engages a worm-wheel located between the turret bearings. The machine can be so adjusted that the turret stops only at the tool positions required and skips any of the regular locations, if it is not necessary to use all of the tool-slides.

The turret is rigidly held in its different positions by a locking pin which engages steel plates set in the periphery of a locking disk attached to the turret.

Tool-slides on Turret.—The slides which hold the end-working tools are gibbed to the square end of the turret casting that extends beyond the frame of the machine. These slides are moved toward and away from the chuck by suitable cams attached to the cam-drum *E*. The longitudinal movement is transmitted from the feed cam-drum to whatever tool-slide is in the working position, by means of draw-bar *G* (Fig. 14) which extends through the center of the turret and has a roll for engaging the cam on one end and is connected to a tool-slide at the other. When a tool-slide comes around to the working position, a pin *P*, attached to the slide, engages a notch in a collar attached to shaft *G*. When the turret indexes, this pin moves out of the notch and the pin on the next successive tool-slide enters the notch.

The tool-slides are provided with T-slots throughout their length, so that the tool-holders can be secured to them at any point, or several tools may be attached to the same slide, if necessary, one being back of the other. Between the tool-slides or at the corners of the turret, accessories to the tools may be applied, such as drill-supports, stops for self-opening dies, taper guides, etc., or a stop for the stock when all of the tool-slides are required for tools. This method of mounting the tools on slides enables each tool to be given a rigid support.

Operation of Forming and Cutting-off Tools. — The forming slide *C* at the front of the machine, and the cutting-off tool held by the swinging arm *D* at the rear, are operated independently of each other. As the back-rests in the turners held on the turret are so located as to take the thrust of the forming tool, turning and forming operations can be performed at the same time, or the turner may be used as a support for the work when the forming tool is in action.

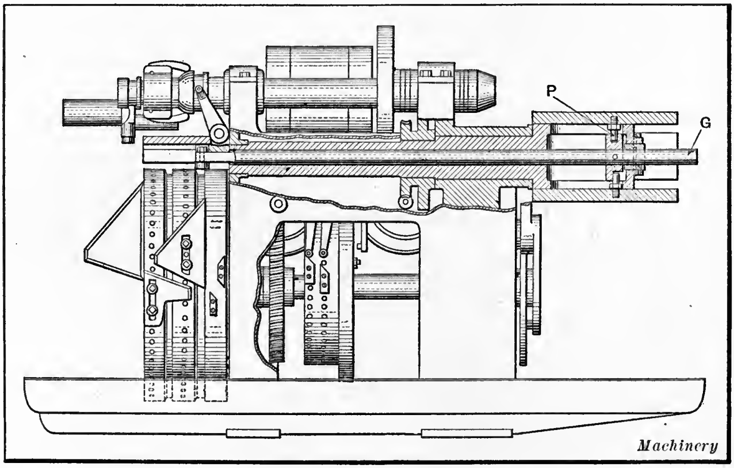

Fig. 14. Sectional View showing Method of Supporting Turret and Operating Tool-slides

Arrangement of Cams. — The camshaft carries the feed cam-drum *E* and the operating cam-drum *F*. The cam *H* on drum *E*, through the medium of draw-bar *G* extending through the machine, imparts a forward feeding movement to the tool-slides; cam *J* controls the return movement. Three feed cams are regularly furnished with the machine. The inclination of these cams vary so that they give fine, medium, and coarse feeds; they may readily be located anywhere on the

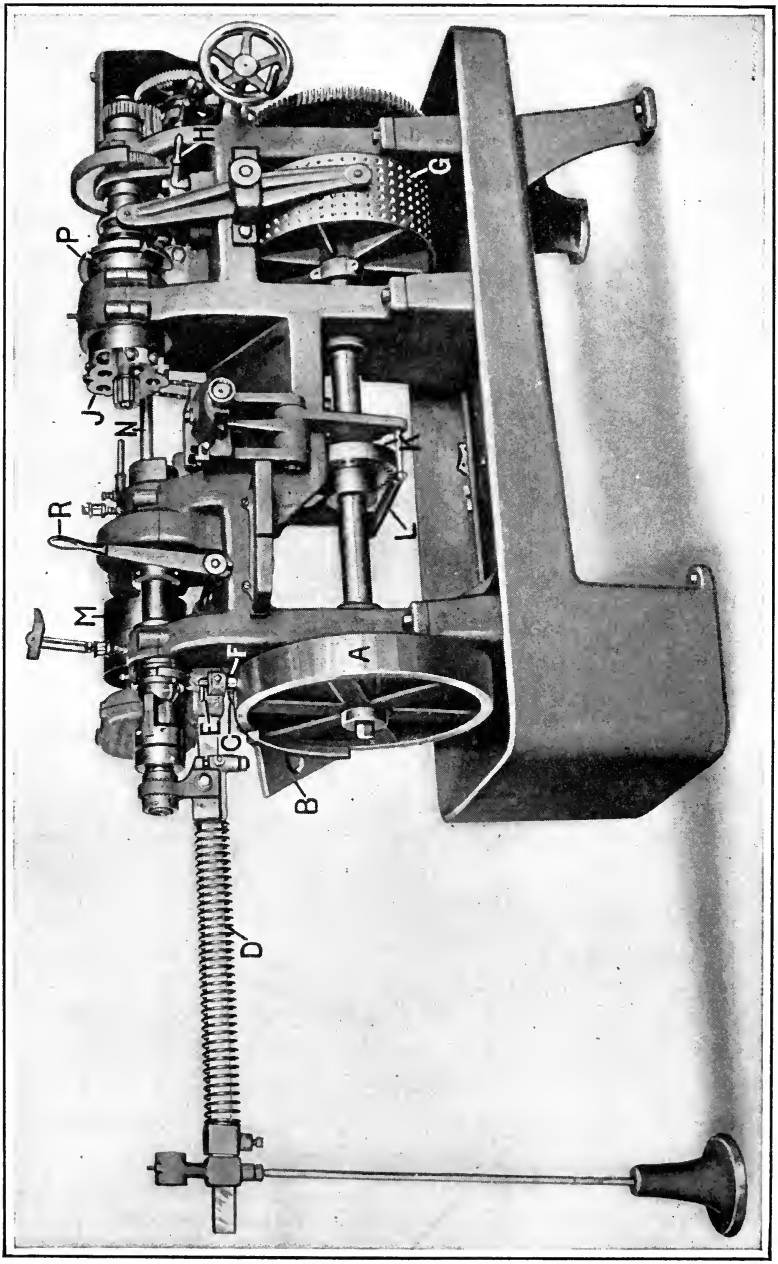

Fig. 15. Chicago Automatic Screw Machine

cam-drum, as they are held in position by two cap-screws. The camshaft has a rapid and a slow movement. The cams for operating the high-speed lever *K* which controls the rapid and slow movements of the camshaft are held in a circular T-slot in the left-hand edge of the operating cam-drum *F*. A set of cams *L*, for operating the belt shippers, is also attached to this cam-drum. The dogs for operating the turret-revolving mechanism at the proper time are held in a circular T-slot extending around the right-hand edge of cam-drum *F*. The cams for operating the forming slide *C* and the cutting-off arm *D* are attached to disk *M*. The forming-slide cam is located on one side of the disk and the cutting-off cam on the other side. These cams are held in place by screws, so that they can readily be changed. The cams for opening and closing the spindle chuck are located at *N*, and the movement for feeding the stock through the spindle is derived from cam *O*.

Application of Motor Drive. — When the Gridley automatic is motor-driven, two variable-speed motors are employed, each having its own controller, resistance, etc. One motor drives the spindle while the other drives the feeding mechanism, so that the cutting speed and the feed are independently controlled. The feed or speed may be varied automatically as the controllers for each motor are operated by cams on the operating cam-drum.

The Chicago Automatic Screw Machine. — The single-spindle automatic screw machine shown in Fig. 15 (built by the Chicago Automatic Machine Co.) is driven by a single belt from the lineshafting direct to tight and loose pulleys at *M* on the rear shaft of the machine. The lever *R* controls the position of the belt. The shaft on which the pulleys are mounted drives the main drive shaft *N* through two change-gears, which are enclosed in the case on the left-hand end of the machine. The work-spindle is driven from this main drive shaft through gearing having a ratio of 5 to 8, and these gears are never changed. The main drive shaft extends the entire length of the machine and through gearing, drives the mechanism for rotating and indexing the turret, operating the camshaft, and, through a separate spindle and gear, the threading mechanism.

Chuck Feeding Mechanism. — The spindle of the machine is provided with the usual spring chuck and friction feeding finger. This mechanism is operated by cams on drum *A*. Segment *B* pulls the feeding tube back and, when the chuck is opened by the segment *C*, the spring *D* forces the stock forward against the stop. The chuck is then closed by the regular type of chuck-closing fingers. In setting-up the machine on a new job, considerable saving in stock can be effected by pulling lever *E* up. This removes roll *F* from the path of the segment and prevents the chuck from opening and the stock from feeding. This enables the operator to set-up all the tools on one piece without spoiling a large number of parts before the required size and shape is obtained.

Turret Mechanism. — The turret *J* derives its indexing movement from the main drive shaft *N* through a train of gears and a friction clutch, which is operated at the proper time by circular segments or cams attached to the rear side of index plate *P*. These segments control the engagement of the friction clutch when the turret has been withdrawn and, in this way, the turret is rotated far enough to locate the next successive tool opposite the work-spindle. In many cases, tools are not needed in some of the holes in the turret and these empty holes can be skipped in indexing, by attaching long circular segments to the side of the index plate. If only two tools were used, there should be two long circular segments on the index plate, whereas, if three tools were used, there should be two short segments and one long one, and so on. After the turret is approximately located by the indexing mechanism, it is accurately aligned by a guide which engages the notches in the index plate *P* when the turret is advanced to the working position. When setting-up the machine, the turret can readily be indexed by means of lever *H* which serves to engage the clutch at the rear of the machine.

The Camshaft. — The camshaft is driven from shaft *N* through a train of gears at the right-hand end of the machine, these gears being changed in accordance with the speed required as determined by the number of spindle revolutions necessary to complete a series of operations. There are fifty divisions around the circumference of the cam, marked by rows of tapped holes one inch apart, so that the circumference of the cam is 50 inches. In order to illustrate how the lengths of the cams for the different tools are determined, assume that a piece requires a milling operation for a length of one inch. With a feed of 0.005 inch, this will require about 200 revolutions ($1 \div 0.005 = 200$) and, in the same way, the number of spindle revolutions for the other operations is obtained. If the total number for a complete series of operations were, say, 1040, this number divided by 50 (number of divisions on the cam) equals approximately 21, which represents the number of spindle revolutions for every inch on the cam circumference. By dividing the number of spindle revolutions for the milling operation, or 200 by 21, the result equals the length of the segment on the cam for this particular operation; thus $200 \div 21 = 9\frac{1}{2}$ inches, approximately. As the cut is to be one inch long, the segment should have a lead or rise of about $1\frac{1}{16}$ inch. The lengths of other segments for different operations can be determined in the same way. The return segments for the turret are always the same, although their position may have to be changed for different operations.

The Cross-slides. — The cross-slides of the machine shown in Fig. 15 are operated independently by plates or cams attached to drum *K*. These cams impart motion to the cross-slides through fulcrumed levers which are connected at their lower ends by means of a spring *L* that keeps the rolls in contact with the cams. These cams for controlling the movements of the forming and cutting-off tools do not require much adjustment, although sometimes a longer or shorter cam is required. The cross-slides are provided with adjusting screws for setting the tools in the correct position relative to the work.

Method of Cutting Threads. — For threading operations, a central spindle is used, which is driven directly by gearing.

On the 1¼-inch machine, this gearing is so arranged that, for every 100 revolutions of the spindle, the tap or die will make 128 revolutions, so that 28 threads will be cut irrespective of the pitch of the thread for every 100 revolutions of the spindle. If the spindle makes 50 revolutions, 14 threads will be cut, or 7 threads for every 25 revolutions of the spindle. As the spindle always runs backwards, and since the threading die runs faster than the spindle, it is evident that the variation in speed is utilized for cutting the thread. Whenever a thread has been cut to the required length and the turret starts to withdraw the die, the driving pins of the die-holder are disengaged and then the die-holder is held stationary by the engagement of a clutch, thus backing the die off of the thread.

Feeding Movements for Tools. — The feeds recommended for ordinary work on this machine are as follows: When turning machine steel with box-tools, the feed may vary from 0.004 to 0.010 inch for roughing, and, for finishing, from 0.002 to 0.006 inch per revolution of the work. For drills less than ⅜ inch in diameter, the feeds may vary from 0.002 to 0.006 inch, and, for drills over ⅜ inch in diameter, from 0.006 to 0.015 inch per revolution. For forming tools, the feeds may vary from 0.00025 to 0.004 inch, the amount depending upon the width of the forming tool and the diameter of the stock being formed. Cutting-off tools may be given a feed of from 0.002 to 0.004 inch per revolution. When operating on brass stock, the feeds previously given may be doubled.

CHAPTER III

MULTIPLE-SPINDLE AUTOMATIC SCREW MACHINES

The multiple-spindle screw machine represents a development of the single-spindle type and was designed primarily to increase production, by grouping several work-spindles together so that separate bars of stock — one in each spindle — could be operated upon simultaneously. With this arrangement, when there are several end-working tools, such as a box-tool, a drill, a reamer, and a threading die, all of these tools operate on different bars of stock as the turret moves forward, instead of indexing first one tool and then another to the working position, as is necessary when all the operations are performed successively upon the end of a single bar of stock. The advantage of the multiple-operation method, as previously explained, is that the time required for producing a part is equivalent to the longest single machining operation plus the non-cutting period necessary for advancing the tools to the work, withdrawing them, and indexing the spindle carrier, whereas, with a single-spindle machine, the production time equals the total time for all of the operations plus the idle or non-cutting period.

Acme Automatic Screw Machine. — The National-Acme automatic multiple-spindle screw machine shown in Fig. 1 illustrates the general principle governing the construction and operation of screw machines of this class. The machine has four parallel work-spindles *A*, which are equally spaced and equidistant from the axis of the cylindrical head in which the spindles are mounted. Each spindle contains a bar of stock when the machine is in operation, and the bar, as it rotates with the spindle, is operated upon by tools held in an opposing tool-slide *B* and also upon cross- or side-working tool-slides *C*. A tool from the side and one from the end may

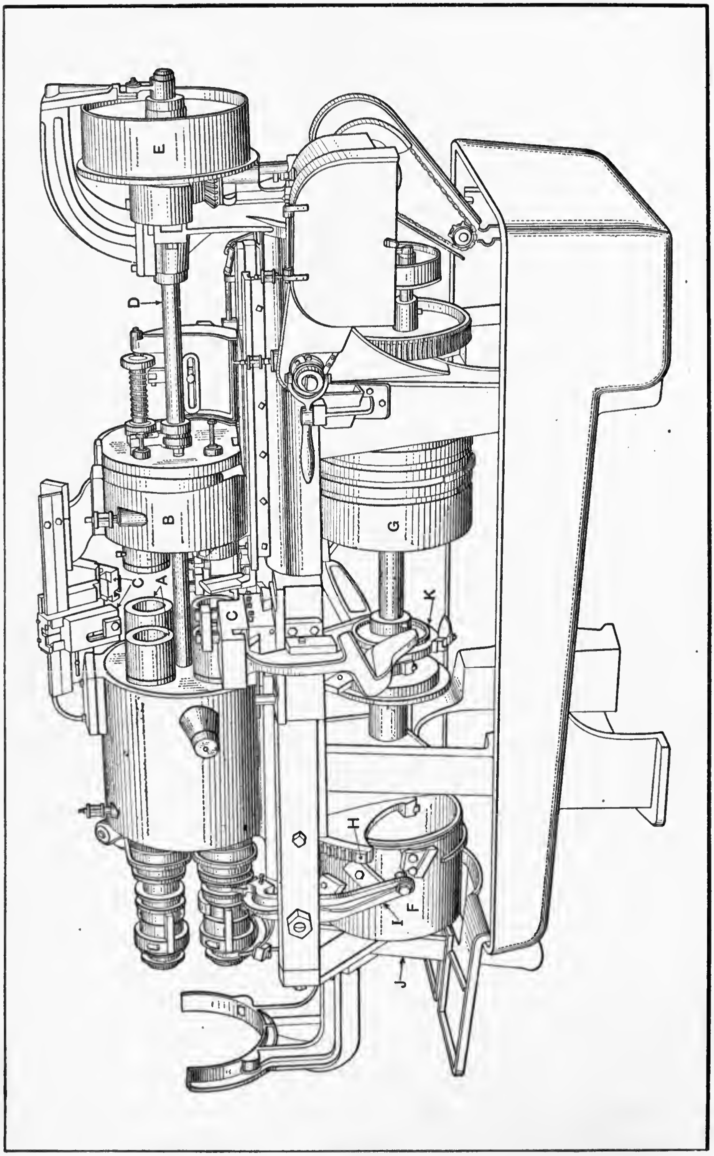

Fig. 1. Acme Automatic Multiple-spindle Screw Machine

work together on each bar, and all of the tools engage the stock at practically the same time.

When the tools are all withdrawn, the cylinder containing the work-spindle is indexed or revolved far enough to locate each spindle opposite the next successive set of tools which perform additional operations. When each bar reaches the last tool or set of tools in the series, the completed part is severed from the bar, which is then automatically moved outward through the spindle far enough for turning another piece. With this arrangement, a part is finished each time the spindle head indexes one-quarter of a revolution.

Order of Operations. — With the machine illustrated in Fig. 1, there are eight standard tool positions, four being from the side and four from the end, thus allowing eight independent tools to be used, if necessary. The stop which engages the feeding movement of the stock does not occupy a tool position. Assuming that eight operations were required, the sequence or order in which the various tools are presented to the work would be about as follows:

After the preceding piece is cut off in the fourth position, a new length of stock is fed forward, the feeding movement occurring during the indexing from the fourth to the first position, or with the larger type of machine in the fourth position, as the indexing is being completed. The cams next bring forward one tool from the side (usually a forming tool) and also a tool from the end, which may be a box-tool, drill, or tool for facing, countersinking, etc. The bar is then indexed to the second position, where it may be operated upon by a shaving tool in the front top slide, or tools for light forming, knurling, or thread rolling; at the same time, tools in the main slide may be used for milling, drilling, reaming, countersinking, facing, etc. The bar is next indexed to the third position, or opposite the rear top slide, which may carry a knurling tool, a thread-rolling tool, or one for a forming or shaving operation. The end tool may drill, ream, counterbore, tap a hole, or cut an external thread. In addition, attachments are frequently used in this third position for milling

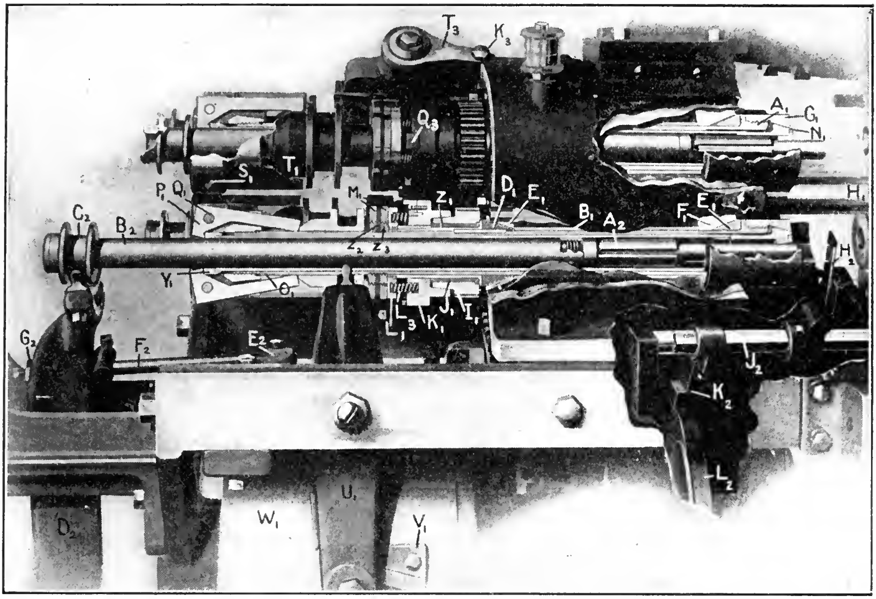

Fig. 2. Spindle-driving and Stock-feeding Mechanism

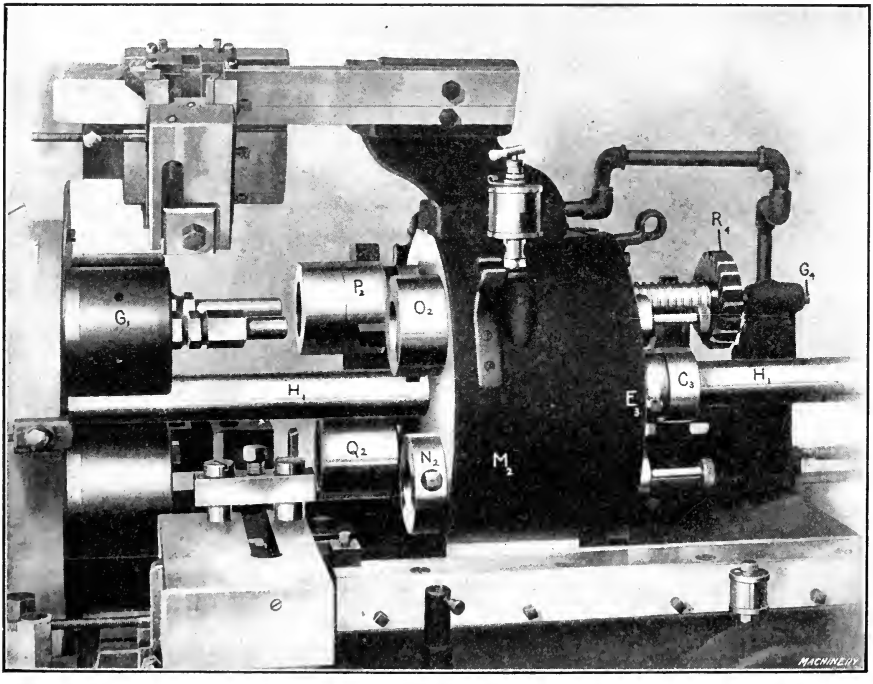

Fig. 3. Main Tool-slide and End-working Tool-holding Spindles

from the end, and for drilling from the side or milling from the side, etc. The use of these attachments is made possible because the work-spindle can be stopped in this position. In the fourth position, opposite the rear horizontal slide, the end tools may countersink, counterbore, drill, etc., whereas the cross-slide may be used for finish-forming, after which the finished part is severed from the bar.

The operations previously referred to merely indicate, in a general way, how the tool equipment may be used. The order of the operations and the tools used depend upon the conditions governing each case. For instance, knurling can be done in the first and fourth positions from the side, if necessary, or from any of the end positions. Threading can sometimes be done in the second position. Moreover, threads can be rolled in the fourth position, if necessary, the order being varied according to the requirements of the work.

Spindle-driving Mechanism. — The four work-spindles of the machine shown in Fig. 1 are driven by gears meshing with a central gear on the driving shaft D which derives its motion from the belt pulley E and extends through the main tool-slide and spindle head to the central driving gear. These spindle gears are not attached directly to the spindles but are driven through friction clutches which permit each spindle to be stopped at the third position in case a threading operation is necessary. The exact arrangement of the spindle-driving mechanism is shown more clearly in the detail view, Fig. 2. In this illustration, the shaft H_1 corresponds to the main driving shaft D in Fig. 1. The spur gears I_1, which are driven from the central shaft, are free to rotate on bronze bushings and are provided with taper projections or shoulders which form the internal member of a friction driving clutch. The other member of this driving clutch consists of a tapering cup K_1, which is keyed to a sleeve that is keyed to the spindle. The cup is held into engagement with the friction gear I_1 by coil springs L_3. The way in which these friction clutches are utilized in connection with threading operations will be described later.

The Camshaft. — There is only one camshaft on the machine illustrated in Fig. 1, and this is under the bed and carries all of the operating cams for controlling the movements of the various slides, and also a segment gear for indexing the spindle head. This shaft carries the two main cam-drums *F* and *G*. Attached to drum *F* are the cams for operating the stock-feeding, chuck-closing, and opening mechanisms, and also the dogs for operating the friction clutches which engage or disengage the work-spindles from their driving gears. On drum *G* are cams for operating the main tool-slide, and, on some machines, a thread-starting mechanism. This camshaft makes four complete revolutions to one revolution of

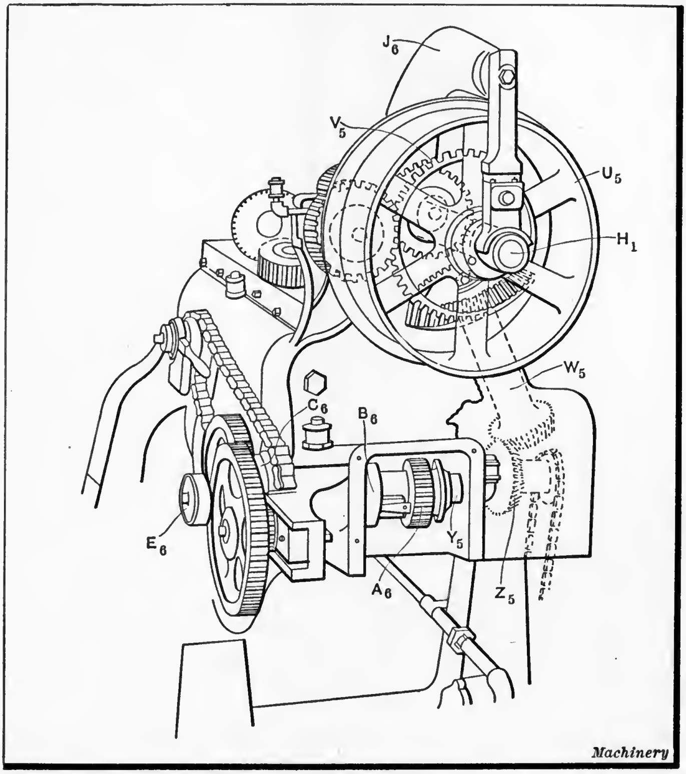

Fig. 4. End View of Machine showing Speed-changing Mechanism for Camshaft

the spindle head, and a complete range of speeds is provided by means of change-gears.

Camshaft Speed-changing Mechanism. — The upper or main driving shaft *D*, Fig. 1, which drives the four work-spindles of the machine, transmits motion to the camshaft beneath the bed through the mechanism illustrated in Fig. 4, which enables the camshaft to be rotated at a suitable speed. The pulley U_5 (which corresponds to pulley E, Fig. 1) is driven from a constant-speed countershaft. This pulley normally runs free on the driving shaft, but can be secured to it for driving direct when necessary. Attached to the inner hub of this belt pulley, there is a bevel gear V_5, which meshes with another bevel gear on the shaft W_5, which transmits motion to the horizontal shaft Y_5 through additional bevel gearing. (On some of these machines, spiral gears are used instead of bevel gears.) From this point, motion is transmitted to the camshaft by means of change gearing, which is selected in accordance with the speed required. The sleeve A_6 of this clutch is keyed to the horizontal shaft Y_5, and sleeve B_6 passes through the bearing in the frame and forms a part of a sprocket and clutch at C_6. The shaft Y_5 is also continued through the frame and has a washer E_6 keyed to its outer end.

The first gear of the four change-gears is keyed to this washer and meshes with a larger gear on the stud. The motion is then transmitted through two other gears to a clutch of which the sprocket C_6 forms a part. Motion is further transmitted to the camshaft, when the tools are at work, by means of a chain which drives another sprocket that is connected to a worm-shaft. This worm-shaft, in turn, drives a worm-wheel which is mounted upon the right-hand end of the camshaft of the machine as shown in Fig. 1. The sprocket on the worm-shaft may be disengaged from the shaft by means of a clutch controlled by a hand lever. The sprocket is provided with a safety device in the form of two fiber collars which are kept into frictional contact by a nut. This nut is tightened sufficiently to drive the worm-shaft when the machine is operating under normal conditions, but, in case of unusual strain, slippage occurs, thus relieving the gearing and other parts of the machine.

For the idle movements of the machine or those movements which occur when the tools are not in operation, as when feeding the stock, indexing the cylinder, and moving the tools to and from the work, the camshaft is driven at the "direct speed" which is much faster than the regular cutting speed, in order to reduce the idle period to a minimum. This direct drive is obtained by shifting the sleeve A_6 to the left, so that motion is transmitted to the sprocket C_6 direct from shaft Y_5, instead of through the combination of change gearing. The change of speed from the direct to the cutting speed, and *vice versa*, is controlled automatically by dogs on a cam-drum located at the right-hand end of the camshaft. This cam

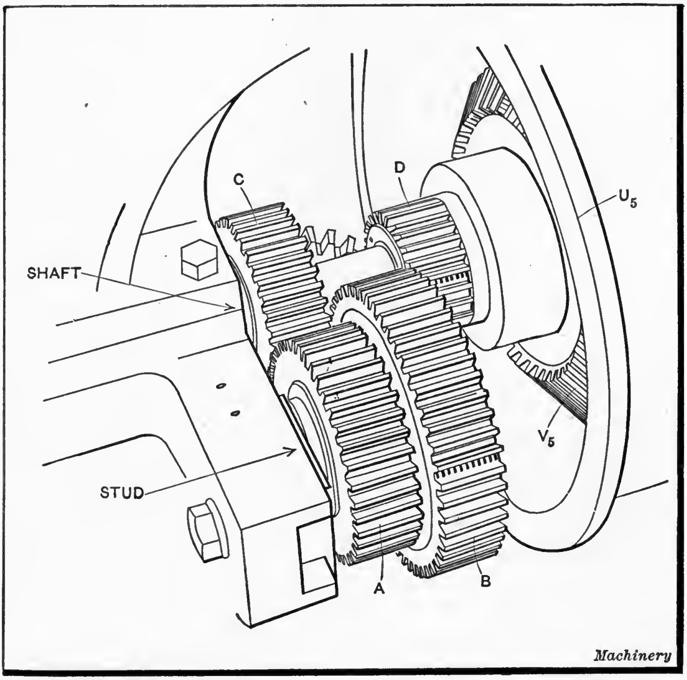

Fig. 5. Gears used in Obtaining Changes of Spindle Speed

transmits motion through suitable shafts and levers to the sliding member A_6 of the friction clutch. The method of determining the change-gears to use in any case is explained in Chapter V, which deals with the adjustment and setting-up of screw machines.

Speed of Main Driving Shaft. — The speed of the main driving shaft from which all other members of the machine are driven can be varied by means of the gearing shown in Fig. 5. The direct speed is obtained by first sliding the gears A and B out of contact with gear C on the shaft, and the gear D which is attached to the hub of the belt pulley U_5, or by removing the gears A and B entirely. Then a sleeve that is keyed on the end of the main driving shaft is fastened to the belt pulley by screws. In order to change from the direct drive to the drive through the back-gears, the screws binding the sleeve to the pulley are removed and motion is transmitted through gears A, B, C, and D, which are selected in accordance with the speed required and as shown by a table accompanying the machine.

Main Tool-slide. — The main tool-slide B (Fig. 1) carries the end-working tools and also the driving mechanism for the threading spindle, as well as the cams which control the movements of the two top slides C. The main slide is actuated by cams directly beneath it which engage a roll attached to the under side. These cams are set so as to bring the tools up to the work quickly, feed them while cutting, at a comparatively slow speed, and then withdraw the tools at a higher rate of speed. As the roll travels over these "fast-angle" cams, the speed of the camshaft is increased considerably, and then reduced to the cutting speed as soon as the tools are in the working position.

A detail view of the main tool-slide is shown in Fig. 3, where it is represented by the reference letter M_2. There are four tool spindles to correspond to the four work-spindles of the machine. The spindle N_2 is in what is known as the "first" position; O_2, in the "second" position; P_2, in the "third"; and Q_2, in the "fourth" position. The tool spindles

N_2 and Q_2 are held stationary in the main tool-slide, whereas the spindles O_2 and P_2 may be revolved. The spindle P_2 is the one used for threading operations, as will be described later. The spindle O_2 is rotated when it is necessary to drill a small hole in a comparatively large piece of work. Without this feature the speed of the work-spindle would have to be increased considerably in order to drill a small hole efficiently. This tool-spindle is also used for holding a threading tool, if necessary.

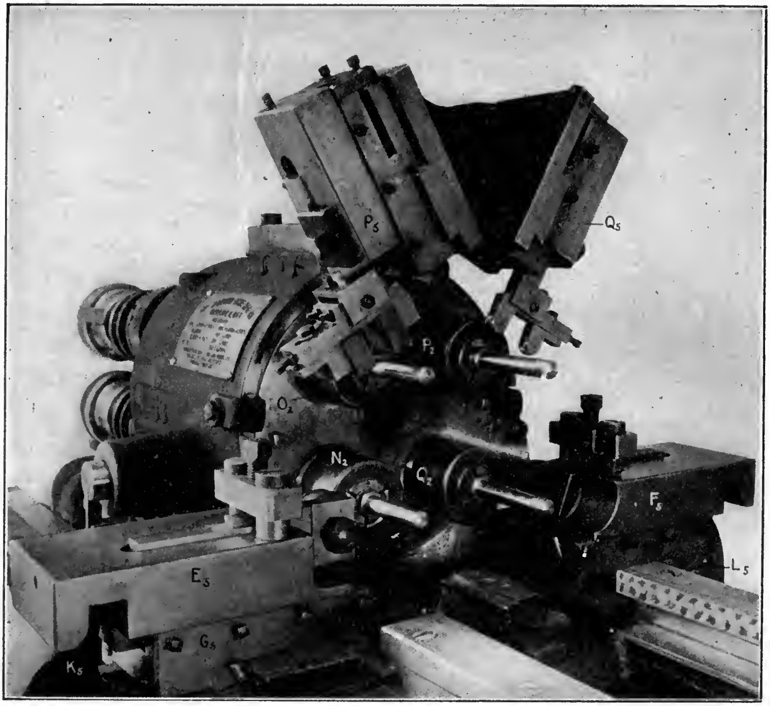

Fig. 6. Main Tool-slide removed, showing Arrangement of the Cross-slides on the "Acme" Multiple-spindle Automatic Screw Machine

Operation of the Cross-slides. — The lower horizontal cross-slides shown at E_5 and F_5 in the detailed view, Fig. 6, carry the forming and cutting-off tools and are moved toward and away from the work by levers, the lower ends of which are engaged by cams on the disk K, Fig. 1. These two slides are mounted on auxiliary slides G_5 and H_5, which are adjustable along the bed of the machine, which adjustment permits changing the positions of the forming and cutting-off tools relative to the work, without adjusting the tools in the tool-holders. The upper ends of the levers which operate these slides engage slots on the under sides of the slides, and the lower ends are provided with rollers which come into contact with the cam-shoes. On some of the Acme machines, these operating levers are drilled in two separate places for the pins upon which they swing. This feature makes it possible to form deeper and cut off larger diameters of stock, when the levers are pivoted in the lower holes, without using cams of greater throw. The forming slide E_5 is provided with a stop and an adjustable stop-screw, to check it at the end of the cam movement so that duplicate parts may be turned to the same diameter.

The upper cross-slides P_5 and Q_5 for operating in the second and third positions, respectively, are similar in construction to the lower slides, but are operated by strip cams which are attached to and receive their motion from the main tool-slide, as shown in Fig. 3. The angles of these strip cams are governed by the rate of feed desired and the lead of the cam operating the main tool-slide. The slide P_5 in Fig. 6 is equipped with a shaving tool, whereas the slide Q_5 has a knurling tool.

Indexing Mechanism. — The head in which the four spindles is mounted is indexed a quarter turn between the successive machining operations, by means of a segment gear *H*, Fig. 1, which engages teeth at the rear end of the spindle head. This segment or fan gear, which is shown more clearly at *J* in Fig. 7, is mounted on the main camshaft *M* of the machine, which, as previously mentioned, makes four revolutions to one complete turn of the cylinder. Provision for accurate alignment of the spindles with the tools in the tool-slide is made by means of two plungers *O* and *K*. The plunger *O* drops into position first and is brought into contact with the aligning screw *N;* then the other plunger *K* is forced in against a hardened steel taper plug. The bolt *K* is withdrawn by an arm *P* fulcrumed at *O* and operated by a dog *R* on the camshaft. This dog should engage fully with the end of the arm before the first tooth of the segment gear *J* comes into contact with the cylinder. In operation, as the bolt *K* is withdrawn, the first tooth in the segment gear *J* comes into contact with the cylinder, thus rotating it and, at the same time, forcing back the bolt *O*. Then, as the cylinder revolves around to the next position, the bolt *O* is forced into the cavity in front of the aligning screw *N* by a coil spring. As the arm drops off of the dog *T*, the bolt *K* is forced home by the coil spring *V*, thus drawing the cylinder back and seating the aligning screw *N* firmly on the flat part of the bolt *O*.

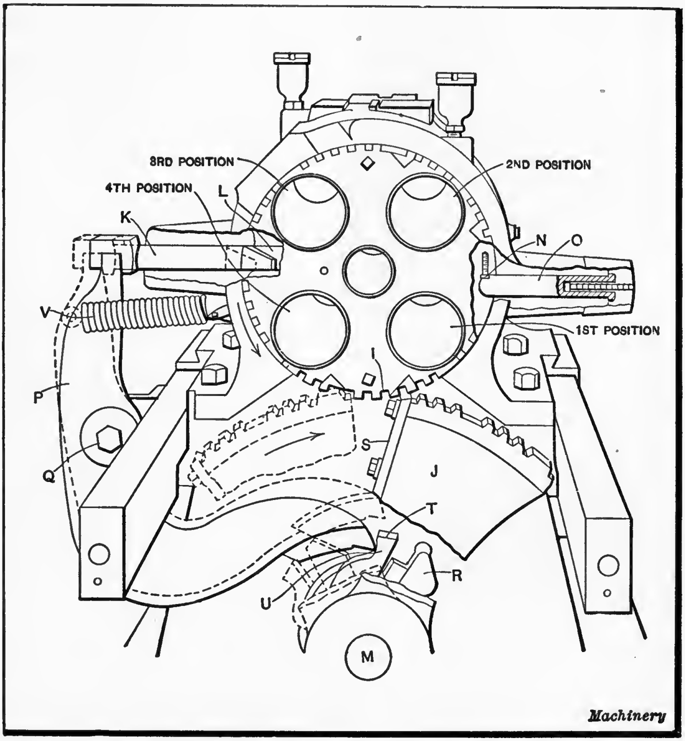

Fig. 7. View showing how the Cylinder is indexed and locked in Position

Operation of the Spindle Chuck. — The opening and closing of each spindle chuck at the point where the stock must be moved forward is controlled by a cam V_1, on drum W_1, Fig. 2, which actuates lever U_1 connecting with whatever sleeve on the spindle is in the stock-feeding position. (The drum W_1 and lever U_1 correspond with drum F and lever I, Fig. 1.) The spring chucks are of the push type and are forced forward for tightening, whenever a tapered collar T_1 is pushed backward by the lever U_1. The tapered collars T_1 actuate the steel sleeves O_1 by means of the levers P_1 which are forced outward in the usual manner. In order to tighten the spring chucks on the bars of stock, hollow set-screws in the collar S_1 should first be unscrewed and then the collars are turned to the right, which changes the fulcrum point of the chuck operating levers.

Feeding the Stock through the Spindle. — The lever for operating the stock-feeding tube also derives its motion from a cam on the drum W_1, Fig. 2. This lever D_2 is pivoted at its lower end and connects with a cam on the drum by means of lever E_2 and rod F_2. The length of the feeding movement is controlled by adjusting the stop G_2 on the rod F_2, thus varying the distance that the rod F_2 travels through lever D_2 before moving it. The stock is fed against a stop or gage, and, on the smaller machines, the feeding is done during the indexing, the stop being located between the fourth and first tool positions. On the larger machines, a cam control brings the stop into the first position and withdraws it after the stock is fed against it and before the tools feed up to the work. The feed-tube B_2 is first withdrawn by lever D_2, causing the feed finger A_2 to slide over the bar which is held tightly in a spring chuck N_1. Cam lever U_1 next releases the chuck, and feed-tube B_2 is pushed forward. As the forward movement begins, the feed finger A_2 grips the stock and forces the latter through the open chuck until it comes into contact with the gage or stop H_2. Just before lever B_2 has reached the forward end of its stroke, and after the bar of stock has come into contact with the stop, the cam lever U_1 closes the chuck, so that the bar of stock is securely held in its position preparatory to being operated upon by the cutting tool. The holder for stop H_2

can be adjusted along the hexagonal rod J_2 and the stop is moved into or out of alignment with the spindle by a cam L_2 which engages the dog or lever K_2.

Mechanism for Threading. — When cutting a right-hand thread, the work-spindle is stopped in the third position opposite the threading spindle, which is revolved at the proper speed for the size and pitch of the thread and the metal being cut. When the thread is finished, the threading spindle is stopped and the work-spindle is again rotated, allowing the threaded piece to run the tool off freely. The die or tap is not forced onto the work, but is advanced by the pitch of the thread. The threading speed is entirely independent of the spindle speed for the other cutting operations. When starting to cut a thread, the die is given a positive start by means of a cam-controlled lever. Change of speed for the die spindle is obtained by sliding the driving gear into mesh with the direct driving gear on the spindle for the high speed, and into mesh with a compound driving gear for a slower speed. The work-spindles are stopped one at a time as the cylinder indexes

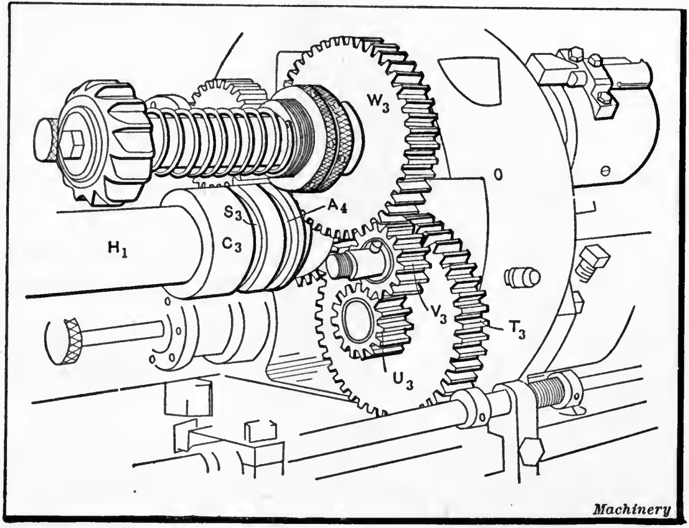

Fig. 8. Gears arranged to Drive the Right-hand Threading Mechanism at its Slowest Speed

them to the third position, by the action of a cam on drum W_1, Fig. 2, which disconnects the friction clutch K_1 that normally engages the spindle-driving gear I_1. When the friction clutch is disengaged, the driving gear runs freely while the spindle is locked stationary for the threading operation. The length of time that the work-spindle must be held stationary in the third position is determined by the duration of the threading or other special operation to be formed.

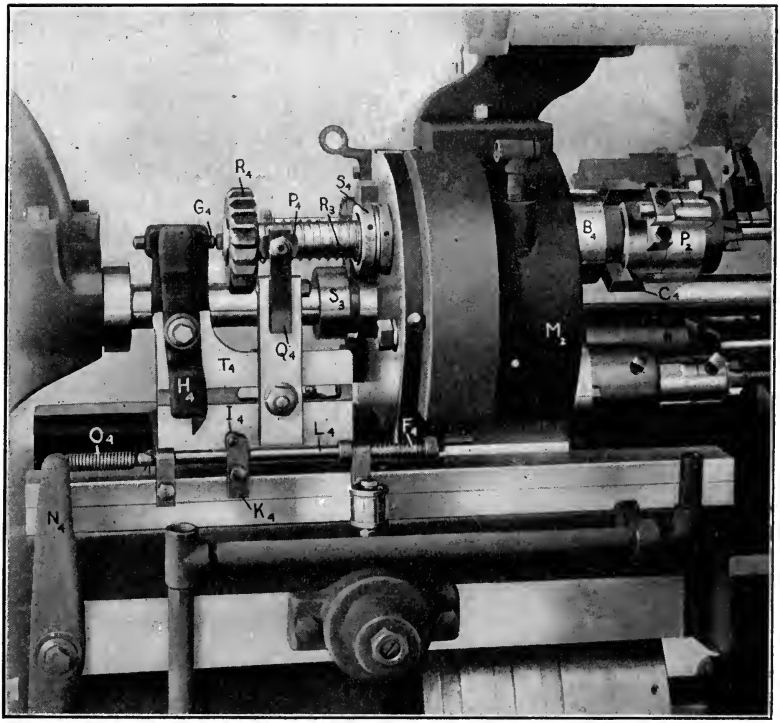

Fig. 9. View of the Main Tool-head, showing the Right-hand Threading Mechanism

Rotation of the Threading Spindle. — The threading spindle is rotated from the main driving shaft H_1, through the arrangement of gearing shown in Fig. 8. A slow and a fast speed may be obtained for each feed of the work-spindle, the slow-speed gearing being shown in place in Fig. 8. When a shoe at R_3, Fig. 9, is in the groove S_3 (see Fig. 8) of the sliding gear, the drive is transmitted through gears T_3, U_3, and V_3 to the gear W_3 on the threading spindle, rotating the latter at its slowest speed. When the shoe R_3 is engaged with groove A_4 of the sliding gear, the drive is direct from this gear to gear W_3, thus rotating the spindle at its fastest speed, which is used for threading brass or cutting very fine threads on soft steel. When it is desired to prevent the threading spindle from rotating, the shoe R_3 is drawn up and gear C_3 slid out of engagement with the other gears. The threading spindle P_2 (Fig. 9) is driven by a block C_4 that engages an adjustable pin E_4. This pin may be adjusted out when the forward travel of the threading tool must be faster than the speed at which the main tool-slide is traveling.

Mechanism for Starting Threading Die. — When cutting a thread, the die or tap is not forced onto the work, but is advanced by the thread after being given a positive start by a cam-controlled mechanism so that a poor first thread will be avoided. Just as the threading operation begins, the cam-operated lever N_4, Fig. 9, causes the roller I_4 to engage the swinging lever H_4, which, through the plunger G_4, pushes the threading spindle forward. In this way, the threading tool is given a positive start; then the threading tool "leads" onto the work as far as the thread is to be cut. The main tool-slide then recedes, but the threading spindle P_2 is prevented from moving backward by the grip of the threading die or tap, so that the coil spring P_4 is compressed. As the tool-slide moves backward, the pawl Q_4 engages ratchet R_4 on the rear end of the threading spindle, thus preventing the latter from rotating, so that, as the work-spindle rotates, the thread-die is backed off of the work. The spring P_4, which was compressed by the backward movement of the tool-slide, then returns the threading spindle to its normal position.

Cutting a Left-hand Thread. — When cutting a left-hand thread on the Acme machine, slight alterations are necessary on the threading spindle, and both spindles revolve, the die spindle rotating slowly and the stock spindle at the regular speed. As the work-spindle is rotated faster than the threading spindle, there is a relative motion between the two spindles, the work-spindle gaining on the threading tool so that a thread can be cut. For backing off a die, the stock is stopped and the threading spindle continues to run, which removes the tool from the work.

Use of Opening Dies. — Long outside threads or those that are extremely coarse or fine can be cut to particular advantage by using an automatic or self-opening die-head. On the Acme machine, the die-head is revolved while cutting and is opened automatically and closed by cam movements while rotating. The mechanism for timing the automatic opening of the die and closing it, for the threading operation, is attached to the main tool-slide on the cut-off side of the machine. The die-head operates in the regular threading position.

Davenport Automatic Screw Machine. — The multiple-spindle automatic screw machine shown in Fig. 10 is built by the Davenport Machine Tool Co., New Bedford, Mass. This machine has five work-holding spindles and is so designed that each tool is controlled independently by a separate cam, and the travel of each tool may be varied without changing the cam which operates it. The five spindles are mounted in the spindle head *A* (Fig. 11) and the five tool spindles are supported by the frame *B*. In addition to the five tool spindles for holding end-working tools, there are two horizontal cross-slides *K* and *L* (Fig. 12) and two swinging arms *M* and *N* for operating forming and cutting-off tools. The mechanism for driving the work-spindle and actuating the tool spindles and cross-slides at different rates of speed, as well as other important features of the machine, will be described.

Method of Driving Spindles. — The five work-spindles are driven from a belt pulley *J* (Fig. 13) at the rear of the machine, which transmits motion to them through change-gears selected in accordance with the speed required. These change-gears drive a large gear *C*, Fig. 11, which has internal gear teeth that mesh with the smaller gears *D* mounted on the various spindles. This outer internal gear has a bearing on the hubs of the spindle gears at the pitch diameter, giving a free-running

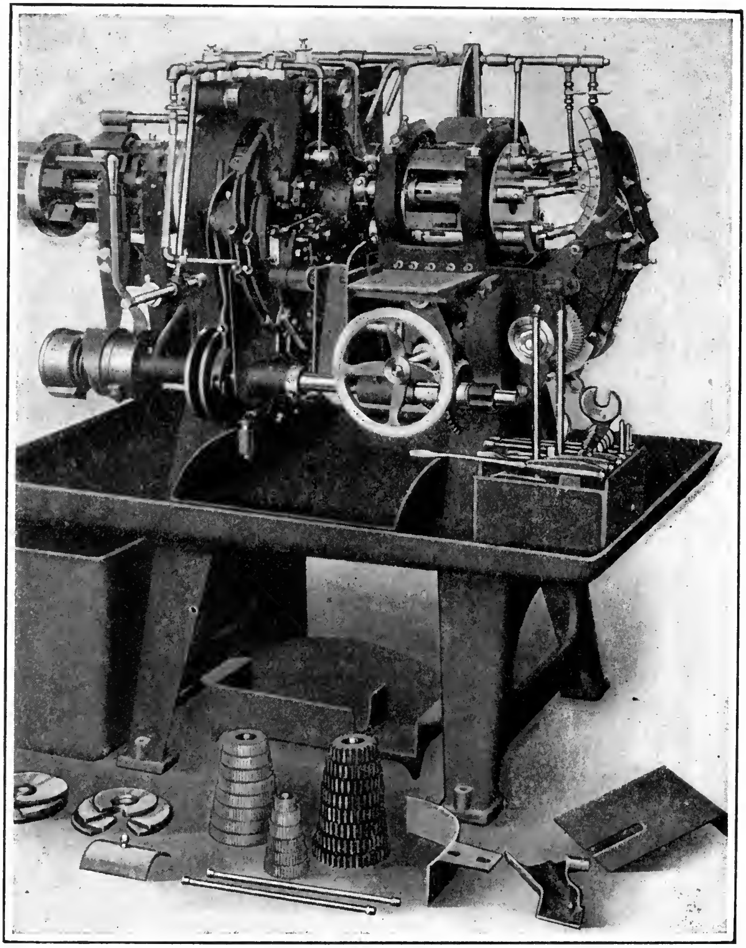

Fig. 10. Davenport Five-spindle Automatic Screw Machine

rolling bearing. The change-gears provide for eight spindle speeds ranging from 600 to 1500 revolutions per minute.

Operation of Tool Spindles. — The end-working tools are mounted in sliding spindles, each of which is operated by a separate cam. These cams are mounted on the shaft *E* (Fig. 11), and actuate the levers *F*, there being one lever for each spindle. The connecting-rods *G* extending from each spindle to its operating lever are attached to adjustable blocks *H* on the

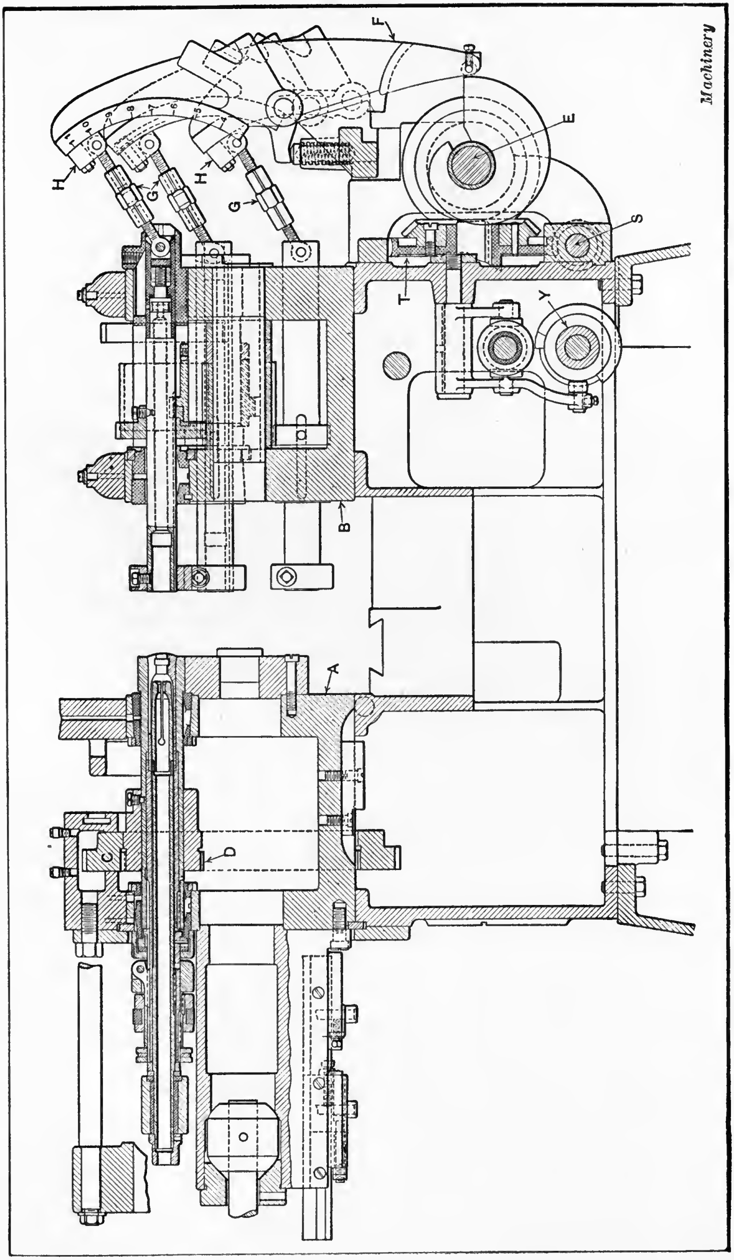

Fig. 11. Longitudinal Section of Davenport Machine showing Arrangement of Work-spindles, Tool Spindles, and their Operating Cams

levers, and, by changing the position of these blocks, each tool is made to advance the same amount as the throw of the cam which operates it, or a less amount, down to one-half the throw of the cam. The face of each lever is graduated to indicate the movement of the tool relative to the cam throw. For instance, a cam for turning a maximum length of 2 inches has a rise or throw of 2 inches, but it is equally effective for turning a length of 1 inch, the reduction being obtained by simply setting the block on the cam lever to the 0.5 division. When the block is set at graduation 1.0, the tool moves a distance equal to the cam throw. The tool spindles may be adjusted lengthwise for varying the operating position of each tool by a turnbuckle connection between the cam lever and the spindle. The curved surface on the lever provides that the tool in its forward position will be the same distance from the spindle regardless of where the block *H* is clamped to the lever. There are seventeen cams furnished with the machine and these cover the work ordinarily done on it. For large quantities of certain kinds of work, it is well to use special cams.

Cross-slides and Swinging Arms. — Each horizontal cross-slide and swinging arm is operated by a separate cam, two of which are mounted on the front camshaft *O* and two more on the rear camshaft *P*. Motion is transmitted to the arms *M*, *N*, and slides *K*, *L*, through levers and connecting links which have the same adjustment as the levers that actuate the end-working tools. These arms and slides provide for one cutting-off tool and three forming tools, where they are required, or more than one tool can be used for cutting off, the arrangement depending upon the nature of the work. Circular forming and cutting-off tools are generally used and are shown in position opposite four of the spindles. Each toolpost has a stop-screw for regulating the size of the work formed, the same as on a single-spindle machine, and, in addition, an adjusting screw or compensating stop, which will be described later.

Driving Mechanism for Camshaft. — The front and rear camshafts for the cross-slides and swinging arms, and the camshaft at the end of the machine for actuating the tool spindles, are all driven from a feed-shaft *Q* (Fig. 13) extending along the rear of the machine. This feed-shaft, in turn, is rotated from the main driving shaft through a friction clutch *R* that is controlled by a hand lever at the left-hand side of the machine in front. The friction clutch is held into engagement by a spring to allow it to slip in case of accident. The rear feed-shaft *Q* drives the shaft *S* (Fig. 11) which extends across the machine. This shaft has right and left-hand worms which mesh with worm-wheels *T* mounted on the front and rear cross-slide camshafts. Bevel gears at the sides of these worm-wheels mesh with corresponding bevel gears on camshaft *E*, and thus rotate the camshaft which imparts movement to the end-working tool spindles. The speed at which the three camshafts revolve is controlled by change-gears at *U* (Fig. 13) which enable the time in seconds that is required to make one piece to be varied from 3 to 20 seconds, increas-

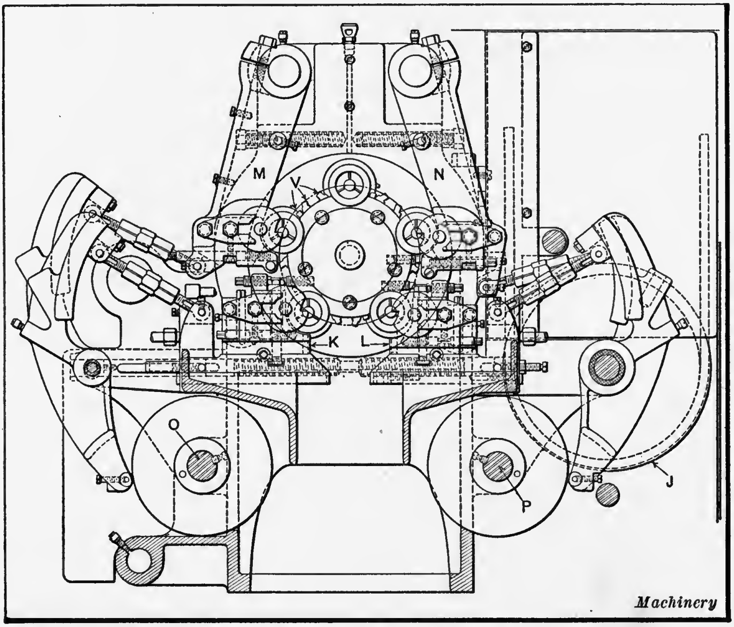

Machinery

Fig. 12. Cross-slides and Swinging Arms of Davenport Machine

ing by ½ second up to 7 seconds, and then by 1-second increments up to 20 seconds, which is the maximum time allowed.

Indexing the Spindle Head. — The head containing the five spindles is indexed by a rod which carries two pawls and is operated at the right moment by a crank disk mounted on the indexing shaft that extends along the front of the machine. This indexing shaft derives its movement from the handwheel shaft (see Fig. 10) which is driven continuously when the feed driving clutch of the machine is engaged. An indexing clutch is disengaged except when the work-spindle head is to be indexed. When the cam for starting the index comes into contact with this clutch at each revolution of the shaft, the clutch is engaged and the shaft for indexing the head is rotated one complete revolution. The feed cams for feeding the tools are stationary during the indexing of the spindle head.

Spindle Head Locking Mechanism. — The spindle head is locked in position by a lever which has a notched shoe that successively engages locking blocks on the spindle head, as these are indexed in position. The locking lever is pulled out of engagement and also pushed back by a positive action. In addition to the locking lever, the spindle head is also clamped by a rod which is drawn downward by the action of a cam surface and serves to tighten the front bearing cap, thus holding the head rigidly while the tools are in operation.

Stock Stop. — The stock is fed through the spindles against a stop which is made of a part of the first turning or other end-working tool. The length that the cams feed the stock is controlled by a nut on the left-hand end of the shaft, and the stock stop is adjusted by a screw near the lower front sliding spindle. The bars of stock rotate inside of a wooden tube, instead of in gas pipes, so as to avoid excessive noise and marring the surface of the material.

Compensating Stops. — In order to insure that the tools on the swinging arms and cross-slides will be located accurately, with reference to the different spindles, the Davenport multiple-spindle machine is equipped with what are known as *compensating stops*. These stops consist of a series of pins V

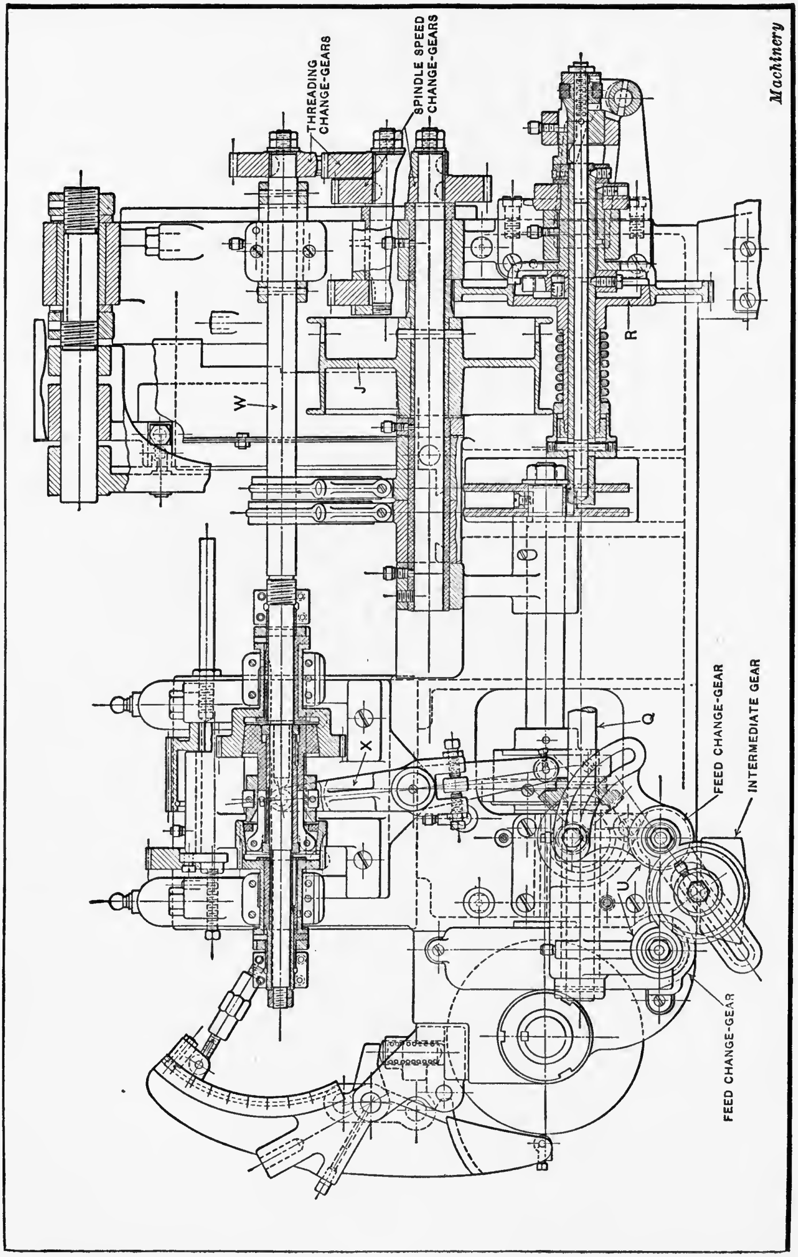

Fig. 13. Rear Elevation and Partial Section of Davenport Machine

(Fig. 12) which project from the periphery of a disk which is secured to the front end of the spindle head. There are four separate stops for each spindle; two are for the front cross-slide and swinging arm and there are two additional stops for the back cross-slide and rear arm, which are utilized when the spindle has been indexed around to the rear position. These pins or stops are engaged by additional stops upon the swinging arms and tool-slides and the adjustment of each stop is such that the cutting edges of the tools are accurately located relative to the axis of each spindle when the stops are in engagement. In this way, each tool is positively located, and any slight inaccuracy, due either to constructional defects or wear in the machine, is automatically compensated for, after the stops have been adjusted.

Method of Cutting Threads. — When cutting threads on the machine illustrated in Fig. 10, the work-spindles are not stopped or reversed. The spindle carrying the die or tap is revolved in the same direction as the work-spindle, but at a slower speed when running the die on, and at a faster speed for backing it off of the finished thread. The speed of a die or tap when cutting is about three-fourths of the spindle speed, so that the actual threading speed is one-fourth of the spindle speed in revolutions per minute, and, as the diameters that are threaded are usually quite small, the actual surface speed for cutting the threads is low enough to insure smooth threads and durability for the dies. When backing off a threading die or removing a tap from a hole, the threading spindle revolves rapidly.

The mechanism for driving the threading spindle is shown in Fig. 13. The long "threading shaft" *W* is driven from the belt pulley shaft at the rear, through change-gears, as shown. This long shaft carries the male part of two friction clutches which engage either of two friction clutch gears of different diameters. These clutch gears, in turn, transmit motion to the threading spindle at the different speeds required for running a die on or for backing it off of the work. Thus, when cutting a thread, the slow-speed gear is engaged; the clutch is shifted to engage the high-speed gear when the thread has been cut to the required length, by means of a cam which actuates the clutch through the lever *X*. In the illustration, the threading clutch is shown engaged for running a die off of right-hand threads.

Work for which Camshaft Rotates Continuously. — For ordinary operations, the camshafts for feeding the tools are stopped when the spindle head is indexed, as previously mentioned. For some classes of work, however, it is preferable to arrange the machine so that the camshafts rotate continuously. For instance, many pieces can be made from brass rods, in 2, 2½, or 3 seconds, and, for these rapid jobs, the machine is equipped with special cams which do not stop revolving when the head is indexed, thus saving a fraction of a second on each piece of work. In order to operate the machine in this way, the roll on the lever operated by cam *Y*, Fig. 11, is removed and attached to the outside of the lever for safe keeping. When this change is made, the feed clutches on the handwheel shaft are not disconnected during the indexing of the head; the cams for feeding the tools then revolve constantly and are so shaped that the tools remain in their back positions during the indexing of the head. The tools arrive at their working position before the crankshaft which indexes the head has entirely completed its revolution, thus effecting a saving in time.

Speeds and Feeds Recommended. — The following feeds and speeds are recommended for the Davenport multiple-spindle automatic: For brass work, the spindles should usually revolve at the fastest speed, which is 1500 revolutions per minute. When using high-speed steel tools and turning soft iron wire, the surface speed of the work should vary from about 90 to 110 feet per minute; for soft machine steel, from 80 to 100 feet per minute; for tool steel, from 20 to 30 feet per minute. Especially heavy cuts will require slower speeds than those listed. For turning ordinary screw stock, the surface speed is usually 100 feet per minute. These speeds are ordinarily used in conjunction with fine feeds varying from 0.004

to 0.010 inch for turning; from 0.0005 to 0.0015 inch for forming and cutting off.

Hayden Automatic Screw Machine. — The five-spindle automatic screw machine shown in Fig. 14 (built by the Cincinnati Automatic Machine Co.) has incorporated in its design several distinctive features. The five spindles, which revolve in a forward direction, thus permitting the use of right-hand tools, such as drills, etc., are driven either from a constant-speed motor, or by a single belt pulley *A*, at the rear, which transmits motion to the spindles through a geared speed-changing mechanism, at *B* (Fig. 15) of the tumbler-gear design. The end-working tools, such as box-tools, drills, reamers, etc., are held in spindles which are operated inde-

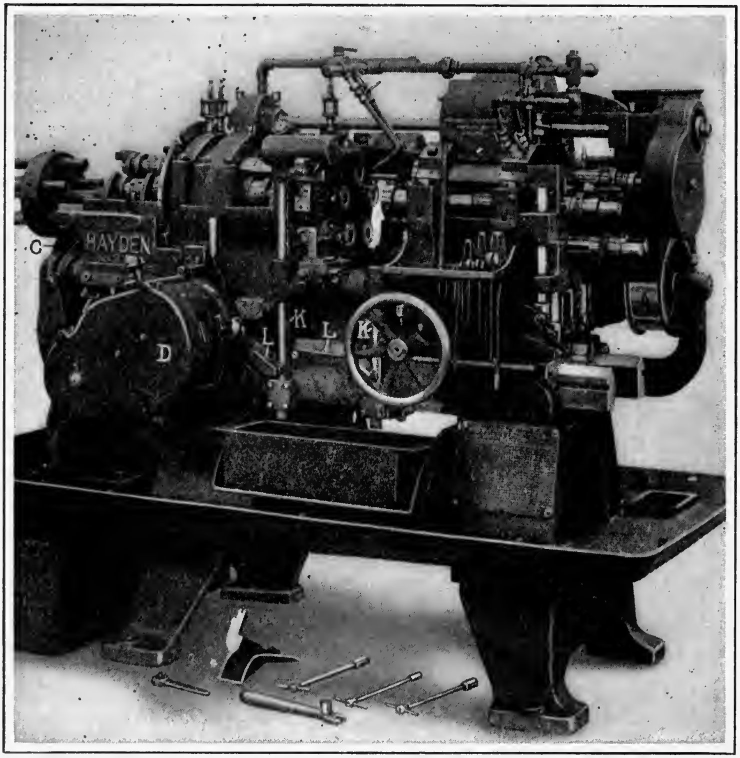

Fig. 14. Hayden Five-spindle Automatic Screw Machine

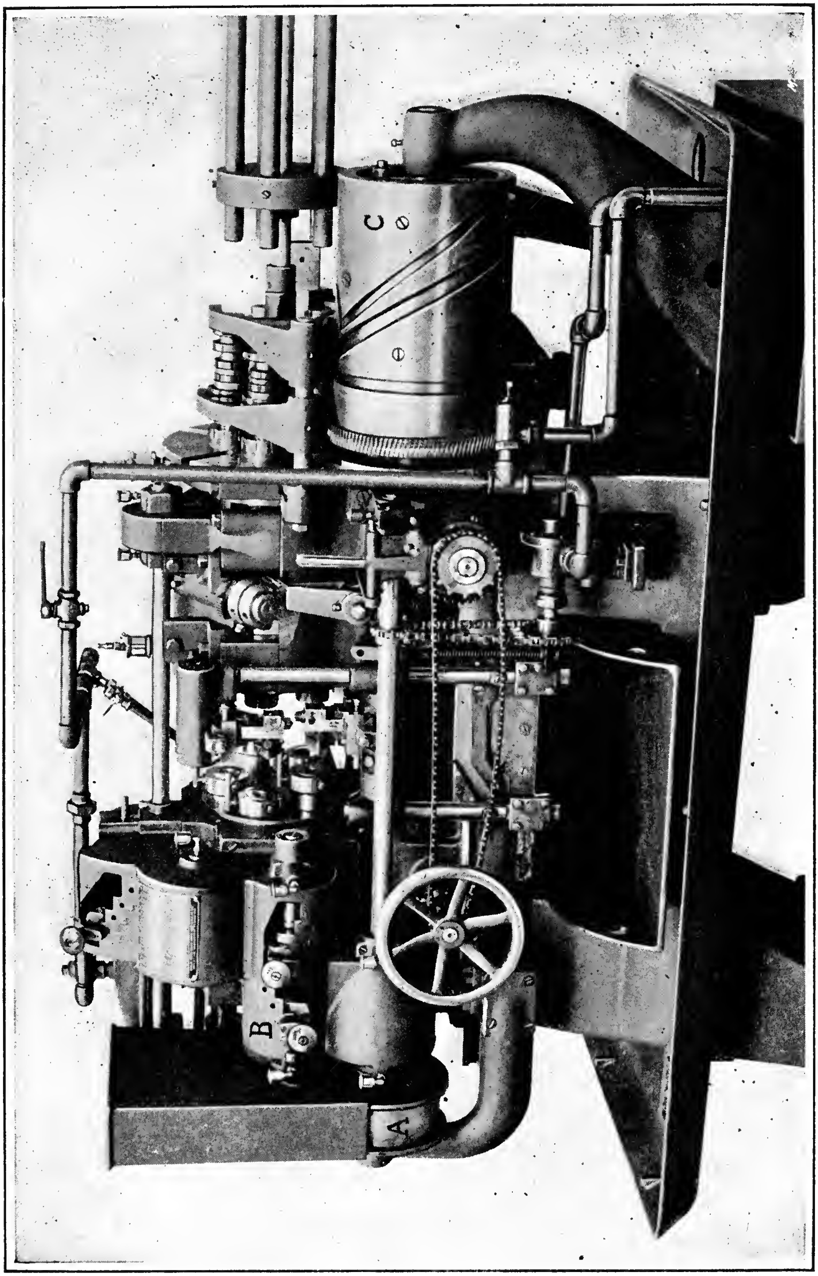

Fig. 15. Rear View of Hayden Automatic

pendently by cams that are a permanent part of the machine and are adjustable for varying the feed of each tool in accordance with its work. Four cross-slides are provided for holding either circular tools, rectangular forming tools, knurling tools, thread rolls, a cross-drilling attachment, or combinations tools. The cams for operating all the cross-slide and end-working tools are held on slides and are actuated by a master cam which imparts to each slide a reciprocating motion.

Spindle Chuck. — The chucks or collets of the machine shown in Fig. 14 are of the draw-back type, but they are held in a stationary position endwise while the closing member is pushed forward over the chuck for tightening it upon the stock. When a chuck of the "push-out" type is closed, it grips the stock while moving forward, because the tightening of the chuck depends upon this forward motion. By designing the chuck-closing mechanism so that the outer chuck-closing member is pushed forward instead of the chuck, it is claimed that excessive strains on the mechanism, resulting from the movement of the stock after it is partially gripped by the chuck, are eliminated. The chucks are opened and closed and the stock fed forward by cams on the master cam-drum *C* at the end of the machine. Adjustment for feeding the stock to different lengths is made by a screw in the master drum. By the shifting of a lever, the machine can be made to run in the usual manner without feeding any stock or operating the chucks, which is convenient when setting up the machine or when testing the size turned by any tool after the cutters have been sharpened, etc.

Operation of the Master Cam. — The master cam-drum *C*, which imparts motion to the cross-slide and the tool spindles, has two speeds. This master cam-drum revolves at a uniformly fast speed, for three-quarters or its circumference, this movement requiring one and one-half second. The remaining one-fourth of the master cam-drum circumference is utilized in operating the cutting tools, and the speed of rotation is reduced in accordance with the nature of the machining operations, by means of a geared feed-box *D* at the front of the machine. While the master cam is operating at the fast speed, the first action that occurs is the withdrawing of all tools, and, when these are back out of the way, the head which carries the work-spindles is unlocked and indexed. The chuck holding the stock from which a finished piece has been severed is opened and the stock fed against a stop, after which the chuck is closed; these movements occur simultaneously with the indexing and are followed by the locking of the

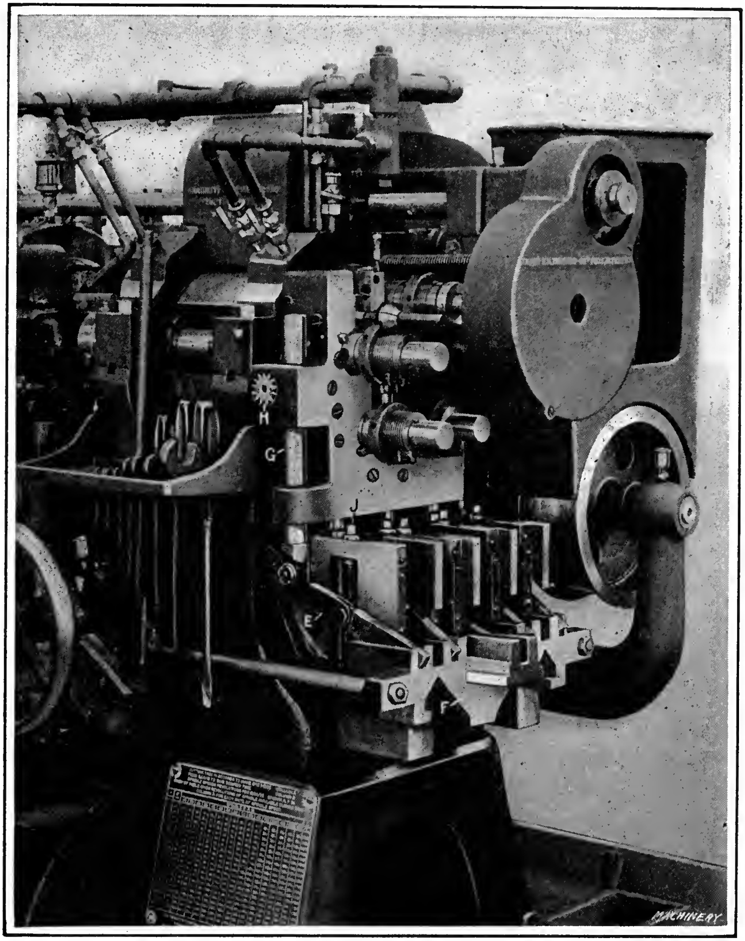

Fig. 16. Adjustable Cams of Hayden Automatic

head and the bringing of all tools into position for starting another series of operations. At this point, the speed of the master cam is automatically reduced and continues to rotate at this slower speed until the tools have completed their work and are ready to be withdrawn again; therefore, it will be seen that the time required for finishing a part is equal to the time necessary for the cutting operations, plus a constant period of one and one-half second (three seconds on preceding design) while the master cam is rotating three-fourths of a revolution at the fast speed.

Adjustable Cams. — The cams for operating the cross-slides and the tool spindles of the machine shown in Fig. 14 are in the form of a slide or wedge having a hinge or swivel point at one end. The arrangement of these cams for the end-working tool spindles is shown by the detailed view, Fig. 16. The five cams *E* for the end-working tool spindles are carried by a slide *F* which is moved in a direction parallel with the tool spindles, by the master cam *C* at the opposite end of the machine. Each cam *E* transmits motion to the tool spindle which it controls, by means of vertical rods *G*, having rack teeth at their upper ends which engage pinions *H* that mesh with rack teeth on the tool spindles. The lower ends of these vertical rods *G* are equipped with rollers that bear against the cams *E* and, as the latter are moved by the master cam, each tool spindle is also moved longitudinally an amount depending upon the inclination of the particular cam *E* by means of which it is operated. The angular position of each cam is varied in accordance with the feed required by the tool, by adjusting screws *J*. With this arrangement, special cams are not required for each job, and the only cams furnished with the machine are those which form a permanent part of it.

The four cross-slides are also operated by separate cams, the inclination of which may be varied for regulating the feeding movement of each cross-slide independently. These cams *L* (Fig. 14) also transmit motion to the cross-slides through vertical rods *K* having rack teeth at their upper ends which engage pinions meshing with racks attached to the cross-slides. The cams *L* are carried by slides which receive their motion from the master cam-drum *C*.

Cross-slide Stops. — Each cross-slide has an adjusting screw and a separate stop on the outside of the revolving head. These stops are adjustable and provide means to compensate for any slight wear which may occur, although, after having once been correctly set, they should not require adjustment for a considerable period. Each slide is provided with a swivel to enable work to be formed tapering or for correcting a tapering cut. Each slide also has a screw for crosswise adjustment.

Indexing and Locking Mechanism. — The head is indexed by a crank and slot mechanism, insuring an easy starting and stopping movement, in order to avoid excessive vibration and jar. The locking pin for the spindle head is located at the bottom near the chucking end, and has one flat side and one angular side so that the latter pushes the head around until the flat side comes into contact with the locating block. The head may be unlocked when it is desired to index or revolve it by hand.

Time Required for Making One Piece. — As previously explained, the master cam-drum *C*, Figs. 14 and 15, controls the movements of all cutting tools and completes all of the cutting operations while it is turning one-fourth of a revolution; therefore, the time required to make one piece depends upon the speed at which the master cam rotates during this one quarter revolution. This speed is regulated by the shifting of two tumbler gears located in the case *D* in front of the machine. By means of these gears, 20 different speeds may be obtained which give periods of time ranging from 2½ to 36 seconds. A plate or table attached to the machine shows, opposite each unit of time and under the different spindle speeds available, the number of spindle revolutions during that particular period of time, which, of course, is equivalent to the number of revolutions available for each operation. After deciding the order of the operations and which operation requires the greatest number of spindle revolutions (which may be found by dividing the length of the cut by the feed

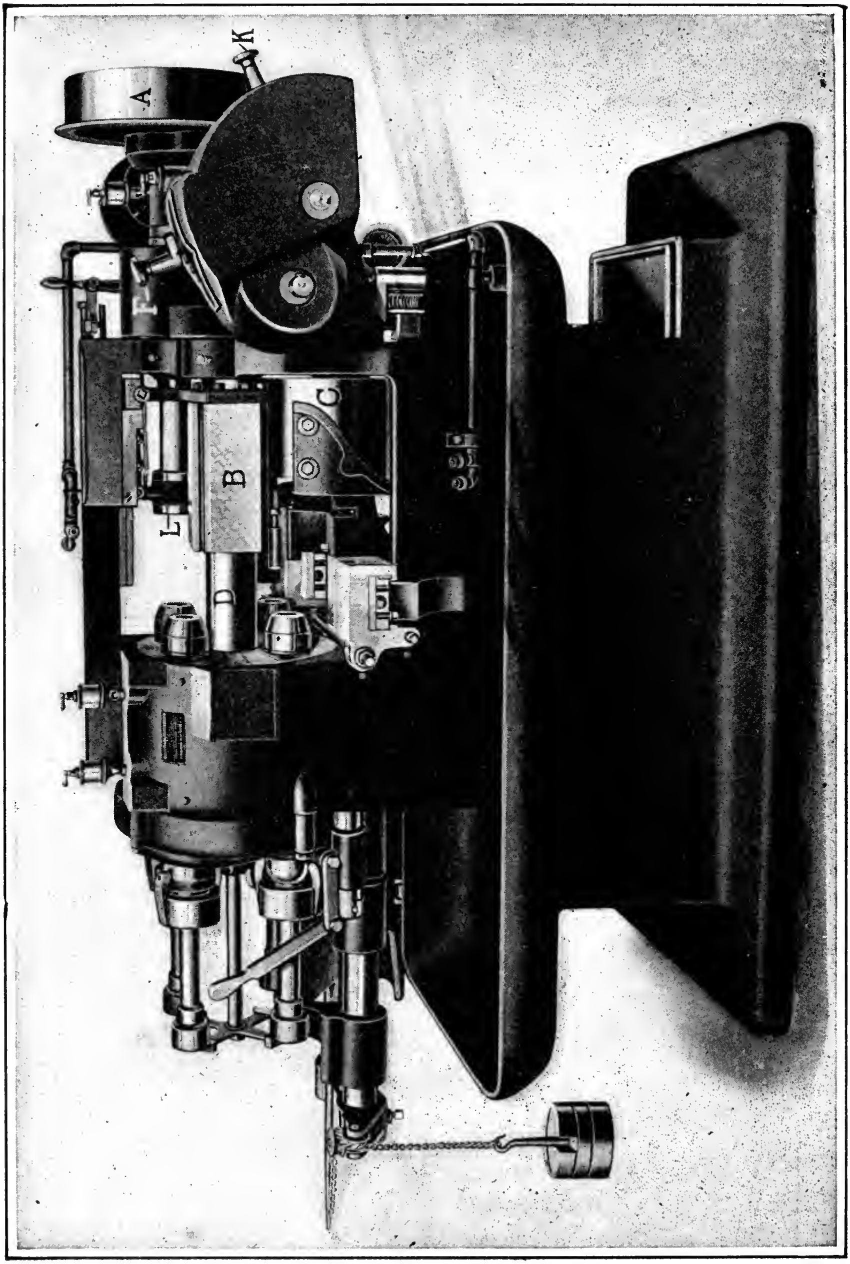

Fig. 17. Gridley Multiple-spindle Automatic

per revolution), the total number of revolutions per operation is obtained. Then referring to the plate or table, the nearest number of spindle revolutions is located in the column headed by the spindle speed which is suitable for the work to be produced; opposite this number will be found the time in seconds required for machining, and also letters indicating the respective positions of the tumbler-gear levers. There are sixteen changes of spindle speeds obtained by shifting gears in the speed-box *B* at the rear.

Thread Cutting Operations. — The top spindle of the machine illustrated in Fig. 14 is usually used for thread cutting. If threading operations are not necessary, however, this spindle may be converted into a regular tool spindle or it may be used for high-speed drilling. When cutting a right-hand thread, the spindle which holds the die is revolved in the same direction as the work-spindle, but at three-fourths of the spindle speed, whatever that speed may be, so that the actual threading speed is equivalent to one-fourth of the spindle speed. At a fixed time, which is three-fourths of the total time required for making a part, the spindle is caused to stop instantly, and as the die continues to revolve, it is unscrewed from the work. When cutting a left-hand thread, the spindle that is in line with the die is stopped and the die revolves at one-fourth of the regular spindle speed. After the thread is cut, the spindle is rotated at full speed, thus backing the work out of the die. The mechanism for thread cutting is self-contained on the machine and the machine is readily changed for cutting left-hand threads.

Gridley Multiple-spindle Automatic Screw Machine. — The Gridley multiple-spindle automatic screw machines have four spindles, the $1\frac{1}{4}$- by $5\frac{1}{2}$-inch size being shown in Fig. 17. These spindles are driven constantly in one direction from a driving shaft at the center of the spindle-carrying cylinder. This shaft is provided with a gear which meshes with a gear on each spindle and is driven through change-gears from a pulley *A* running at a constant speed. This pulley may be connected with an overhead countershaft or be driven from a motor.

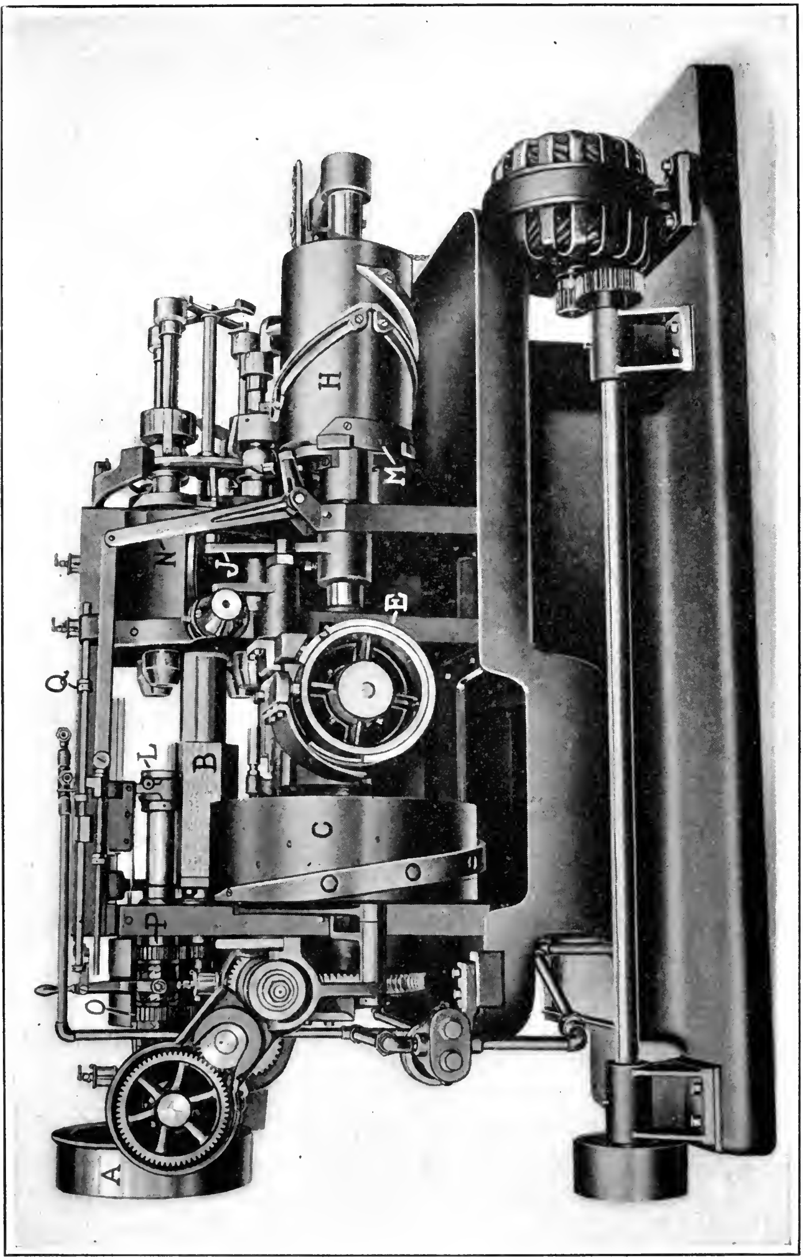

Fig. 18. Rear View of Gridley Multiple-spindle Automatic equipped with Motor Drive

The four work-spindles are mounted in a spindle carrier which extends from one end of the machine to the other. This spindle carrier is given an indexing movement each time the tools have completed their work and have been withdrawn. In this way, each of the work-spindles is brought into alignment with the various tools held on the tool-slide *B*, which is fed forward and quickly withdrawn by a cam. After each indexing of the spindle carrier, the tool-slide moves forward and each tool or set of tools performs the required operation. The tool-slide is then withdrawn and the spindle carrier indexed to locate each spindle into alignment with a different tool or set of tools. A finished piece is produced every time the tool-slide moves forward. A Geneva stop mechanism is employed for indexing the spindle-carrying cylinder. With this mechanism, the starting and stopping of the carrier are gradual, but the intermediate movement is rapid.

Tool-slide. — The tool-slide *B* is mounted upon an extension *D* of the central part of the spindle-carrying cylinder. This extension is supported in a bearing at one end of the machine while the larger diameter which carries the spindles is supported at the other end, the tool-slide being mounted between the two bearings. With this arrangement, if either end of the cylinder becomes loose in its bearing, the alignment between the spindles and tool-slide would not be affected. The tools on the tool-slide are held in holders which are rigidly bolted to the slide instead of being held by shanks.

Feeding Movement for the Tools. — The feeding movement for the tool-slide which holds the end-working tools is derived from a cam on the cam-drum *C*, Fig. 18. The slides carrying the forming and cutting-off tools are operated by cams on the drum *E*. By means of a quick change-gear mechanism controlled by lever *F*, the feed may be varied at will, while maintaining a constant spindle speed. With this arrangement, the machine may be set up without considering the rate of feed, as the latter may be varied afterwards until it is as coarse as conditions will permit.

The Idle Movements. — After the tools have finished cutting, the withdrawal of the tool-slide, the indexing of the spindle-carrying cylinder, and the movement of the tools forward again to the position for cutting are commonly known as the *idle* or *non-productive* movements. On the Gridley multiple-spindle machine, the time necessary for these idle movements is independent of the feed used when the tools are cutting.

Camshaft and Cams. — The main camshaft is parallel to the driving shaft and is driven from it by a worm on the spindle driving shaft, through a change-gear box, a worm-shaft, and a worm-gear mounted on the camshaft. This shaft carries the cams for feeding the tool-slide, for operating the chuck- and stock-feeding mechanism, and also operates the mechanism for revolving the spindle carrier and drives the shaft upon which the forming and cutting-off cam-drum *E* (Fig. 18) is mounted. The long cam-drum *H* operates the mechanism for feeding the stock. The indexing arm *J*, for revolving the spindle carrier, carries a cam which withdraws the locking bolt and indexes the spindle carrier one-fourth of a revolution for each revolution of the camshaft. The cam-drum *E* which carries the cams for operating the cut-off and

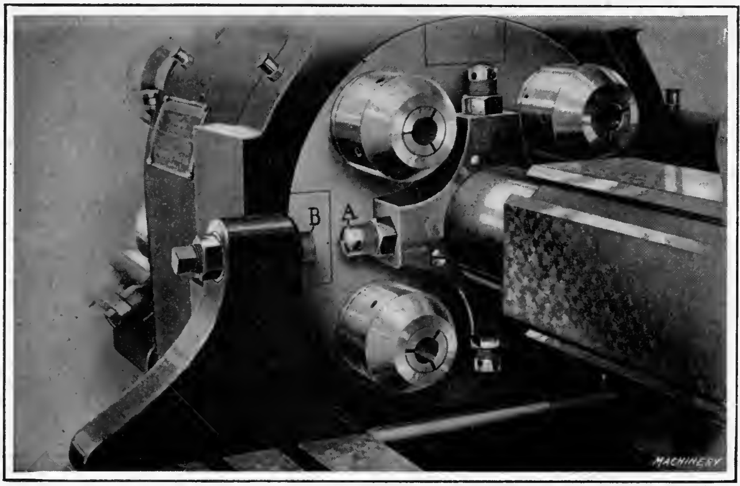

Fig. 19. Independent Stops for Each Spindle Position

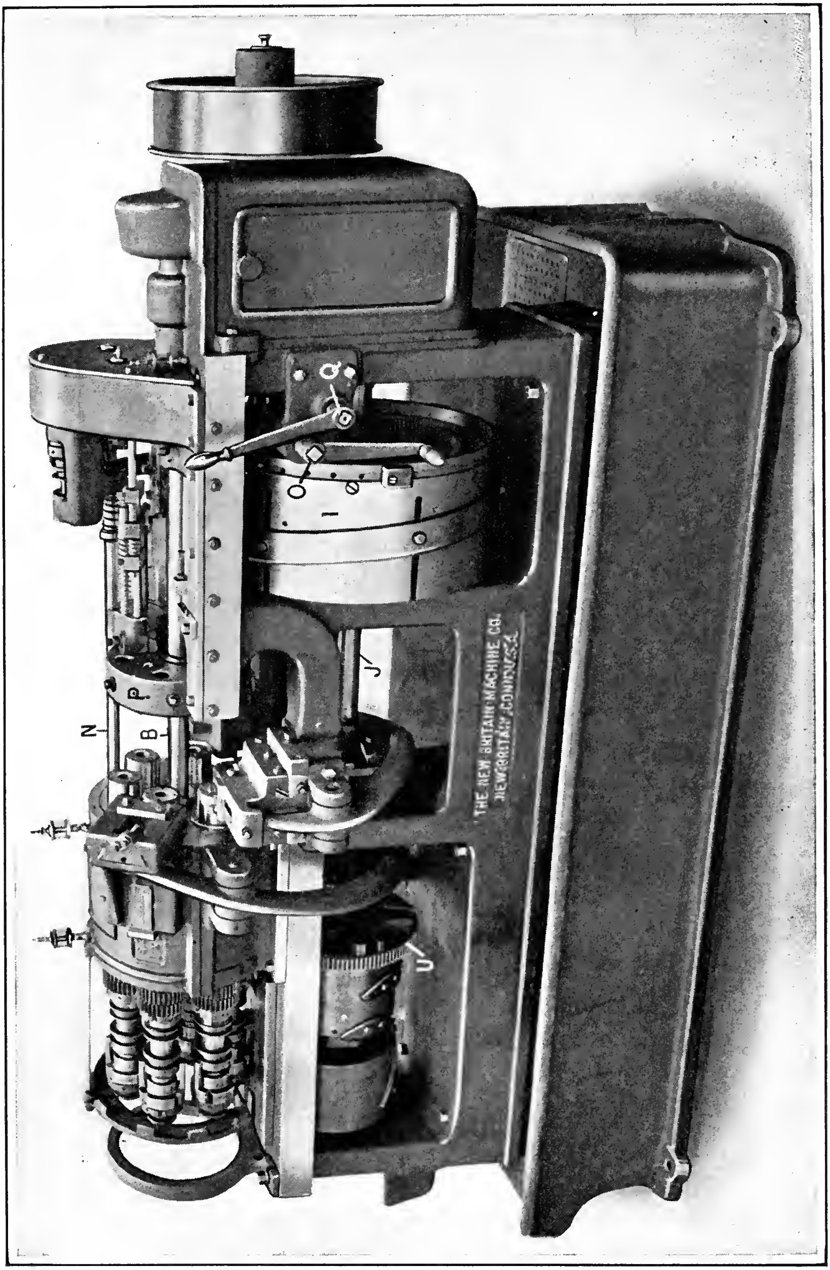

Fig. 20. New Britain Six-spindle Automatic Screw Machine

forming tool-slides has its axis at right angles to the main camshaft and is driven through a pair of bevel gears. The large cam-drum *C* for feeding the tool-slide is provided with cams of three different leads, and cam lever *K* is set in one of three positions, depending upon the particular cam that is being used.

Stops for Forming Tools. — Independent stops for the forming tool are provided for each spindle position, so that the tool is moved up to the same position relative to the spindle each time a part is produced. The arrangement of these stops is shown by the detailed view, Fig. 19. The stop *A*, which is attached to the spindle carrier, is engaged by a stop *B*, passing through an arm that is fixed to the forming tool-slide.

Method of Cutting Threads. — When cutting threads on the Gridley multiple-spindle automatic, the die is held in a holder *L* (Fig. 18) which is carried by a slide. This slide is fed forward by a cam *M* which imparts motion to the slide through the bellcrank *N* and the connecting link shown, and the slide is returned by another cam on drum *H*. The die is rotated in the same direction as the spindle, but at a speed slightly less than the spindle speed while the thread is being cut; the die is then revolved at a higher rate of speed, in order to run it off of the work. These two speeds are obtained by means of two gears on the spindle driving shaft which mesh with two loose gears *O* and *P* on the threading shaft. For cutting a thread, the slow-speed gear is engaged by a clutch located between the two gears, and, as soon as the thread is completed, this clutch is shifted to the high-speed gear, thus backing off the die. The adjusting nut *Q* controls the point at which the die is reversed, and the cam for re-engaging the clutch is attached to a worm-wheel on the camshaft. Either right-hand or left-hand threads can be cut by transposing one connecting link and changing one cam.

These machines, at the present time, are built in four sizes: namely, $\frac{3}{4}$ by $4\frac{1}{2}$ inches; $1\frac{1}{4}$ by $5\frac{1}{2}$ inches; $1\frac{3}{4}$ by 7 inches; and $2\frac{1}{4}$ by 7 inches.

New Britain Automatic Screw Machine. — The New Britain automatic screw machine shown in Fig. 20 has six

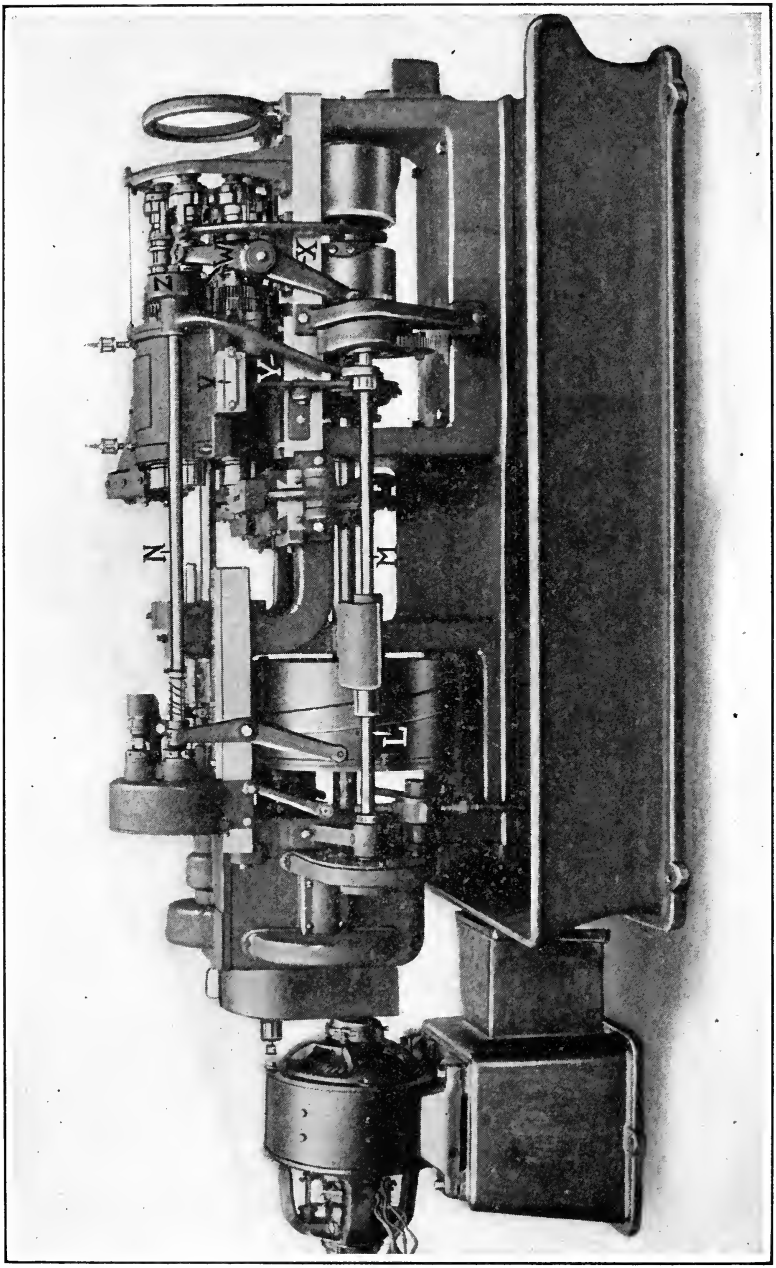

Fig. 21. Rear View of Motor-driven New Britain, Six-spindle Automatic

spindles, so that nine operations can be performed simultaneously on six pieces, by utilizing both the end-working and cross-slide tools. Fig. 22 shows the arrangement of the drive. The driving shaft is shown at the extreme right, and this shaft runs at constant speed. At the left-hand end of the driving shaft there is a gear *A* that transmits motion to the main shaft *B* through gear *C*. The main shaft passes through the tool-slide and spindle carrier, and at its extreme left-hand end carries a gear *D* the function of which is to rotate the six spindles through gears *E*. The drive is carried from the main shaft to the camshaft through a small pinion *F* on the main shaft, that meshes with gear *G* on the feed-shaft. This feed-shaft carries a pinion *H* that meshes with an internal gear on the feed cam *I*. Camshaft *J* is rotated through gears from the end of the feed-shaft, and these gears may be changed to secure any required speed for the camshaft. The drive to the indexing shaft is taken direct from the drive shaft to the index drive shaft *K* through spur gearing. The index shaft is in two sections; the forward section marked *L* and the rear section *M*. (See also Fig. 21.) The forward half rotates continuously, but, at the time of indexing, a clutch connects it with the rear section *M* and the indexing is done through spur gearing and a Geneva motion that will be described later. Power is carried to the threading shaft *N* (see Figs. 21 and 22) through spur gearing direct from the main shaft. At the left-hand end of the threading shaft is a spur gear that is thrown into mesh with the driving gear on the threading spindle, for performing the threading operation.

Spindle Construction. — All of the spindle thrust is taken upon the ball thrust bearings *Q* (Fig. 23) that are set into the frame of the spindle carrier, and receive the thrust of the rotating spindles. The collet chucks, one of which is shown at *R*, are closed on the "push-in" principle, being forced into sleeves on the noses of the spindles. The usual mechanism for closing the chucks is used, there being fingers *S* that are oscillated and throw the chucks forward into the sleeves. These fingers are operated by clutches. The stock tubes *T* are also of the usual type, the work being seized by the spring jaws on the chuck-end of the stock tubes. The stock tubes are advanced by a cam mechanism acting through the sleeve that may be seen on the extreme left-hand end of the stock tube. The main shaft of the machine is indicated at *B*, and transmits power to the spindles through gear *D* that meshes with gears *E* on the spindles. The spur gears *W* are for driving the spindles when in operation for threading, the gear *W* being slidably keyed to the spindles. At all times, except when the spindles are in the threading position, these gears *W* are kept thrust into a taper seat in the gears *E*, and the spindles are driven by the gear *D*. This friction is maintained by fingers *X* that are operated by clutches and yokes. At the time of threading, the clutches are cam-operated so as to release fingers *X*, and the friction drive between gears *W* and *E* is broken; thus at this time the spindles are not driven by the driving gear *D*, because the connection between gears *E* and *W* is broken. For threading, therefore, it is evident that gears *W*, operated by a special driving mechanism to be described later, are responsible for the rotation of the spindles. While the main shaft *B* passes through bronze bushings in the spindle carrier, none of the weight of the spindle carrier comes upon it, this weight being all taken on the spindle-carrier bearings at *V*. Six or more speeds are available for the spindles, and these are effected by change-gears that may be placed upon the right-hand ends of the feed-shaft and cam-shaft, as illustrated in Fig. 22.

The Tool-slide. — There are six tool-holding positions on the tool-slide *P* (Fig. 20) which is operated from cam-drum *I*. Upon this drum are placed the cams that govern the operation of the slide. These cams act through a stud on the lower part of the tool-slide. The cam-drum is kept free from back-lash by a hardened steel roll supported from the frame, that runs against the right-hand edge of the drum. As previously mentioned, the cam-drum is driven by an internal gear and pinion, shown at *H* in Fig. 22. A stud *O* (Fig. 20), carries a bevel pinion that meshes with a corresponding bevel gear on the feed-shaft which carries the small pinion *H*, so that the cam-drum may be turned by hand when setting-up the machine. A hand lever on stud *Q* operates a clutch for disengaging the camshaft at any desired time, thus stopping the action of the tools. This clutch may also be thrown out from the rear of the machine. A laminated cam is made use of on the feed drum. This is a patented cam construction, in which the cam strip is composed of three leaves, which permits of the adjusting of one cam to any length of work within the capacity of the machine.

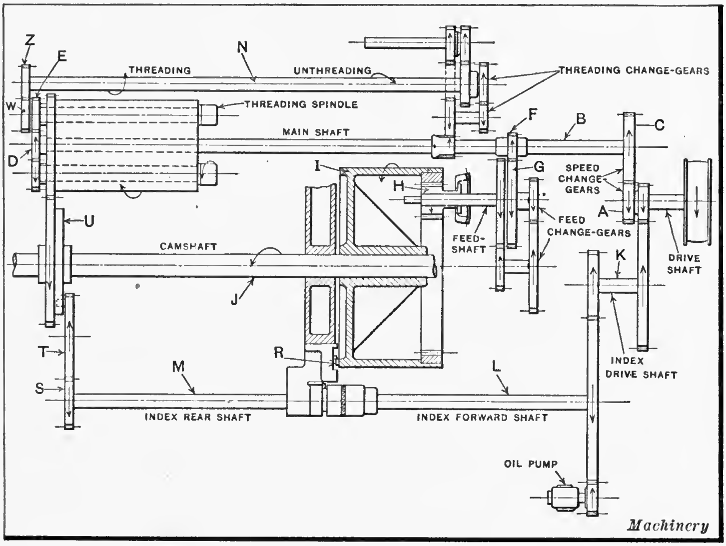

Fig. 22. Diagram showing Arrangement of Driving Mechanism on New Britain Six-spindle Automatic

Indexing Mechanism. — The indexing of the machine shown in Fig. 20 is done at constant speed, irrespective of the speed of the main shaft or camshaft and without regard to the length of the job on the machine. As has been explained, the index shaft is in two sections; the forward section *L* (Figs. 21 and 22) revolves continuously, and the rear section *M* revolves only at the time of indexing. A clutch connects the two sections of the indexing shaft; and, at each revolution of the cam-drum, this clutch is tripped by the small edge-cam *R*, Fig. 22. When the clutch is tripped, and the rear index shaft is caused to turn, gear *S* turns gear *T* through exactly one-half revolution, because gear *S* is just one-half the diameter of gear *T*.

Diametrically opposite each other on the side of gear *T* are two studs that operate the Geneva gear *U* which may be more clearly shown in the front view, Fig. 20. This gear is supported, but not driven, by the camshaft. The operation of the stud in the slot in the Geneva gear turns it exactly one-sixth of a revolution, and as this gear *U* is in mesh with the gear on the spindle carrier, which is of the same diameter, the spindle carrier is also turned one-sixth of a revolution. Just previous to the indexing, a cam and cam lever operated from the camshaft withdraw the locking bolt shown at *V* in Fig. 21. This is a wide heavy key that is normally kept in contact with the spindle carrier by spring pressure, engaging in one of the six slots equally spaced about the circumference of the spindle carrier. The cam releases the key, so that, when the spindle carrier has turned far enough to engage the locking bolt, it jumps into place and holds the spindle carrier until the time of next indexing. The Geneva motion is particularly adaptable to indexing mechanisms in that the starting motion is slow, gradually accelerating and then diminishing at the end of the motion.

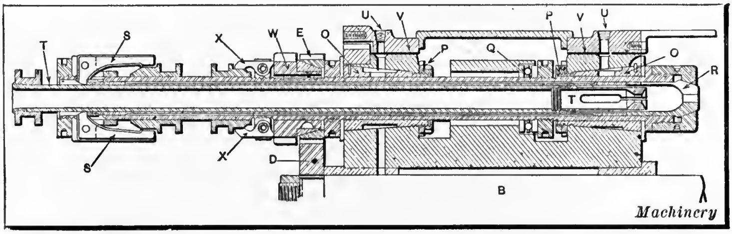

Fig. 23. Cross-sectional View of One of the Six Spindles of New Britain Automatic Screw Machine

The Cross-slide. — The cross or forming slides of the machine shown in Fig. 20 are three in number, operating on the second, third, and sixth spindles. Provision has also been made for adding a cross-slide to the fifth spindle if the work to be performed requires it. Fig. 20 clearly illustrates the second and third spindle cross-slides which are operated by means of cam levers engaging plate cams on the camshaft *J*. The rear cross-slide may be readily seen in Fig. 21 and is used principally for cutting off. The stock-feeding and chuck-closing operations are performed from the cam-drum at the extreme end of the camshaft. This operates on the clutches that feed the stock and close the chuck on the spindle in the first or lowest position, which is just above the top surface of the cam.

The Threading Spindle. — The threading shaft *N* is mounted at the left-hand end (as viewed in Fig. 21) in a floating bearing that permits the entire shaft to be oscillated, thus allowing the gear under the guard at *Z* on the opposite end to be thrown into or out of mesh with the spindle gear *W*, when actuated by lever *Y* that is guided by a cam on the camshaft. The operation of this threading shaft is as follows: Just before the spindle carrier is indexed, the threading shaft and its gear are thrown away from the spindle to give the spindle carrier a clear path for indexing. As soon as the locking bolt has shot into place, a rise on the cam that governs lever *Y* carries this lever back into its inner position with the gear in mesh with the gear *W* on the spindle at the threading position. Simultaneously with this action, lever *X* is operated by the cam on the camshaft and operates the spindle clutch that releases the spindle driving gear *E* (see Fig. 23) from contact with the gear *W* that is now in mesh with the gear *Z* on the threading spindle. By this means the spindle is operated at the correct threading speed. Before the indexing takes place, the threading shaft is again swung away and gear *Z* is thrown out of mesh with the spindle gear.

A brake lever located at the right of lever *X* (Fig. 21) is operated from the camshaft. The upper end of this lever is fitted with a fiber plug and its function is to bear against the spindle and retard rotation just before the threading-shaft gear *Z* goes into mesh with the spindle gear. On the left-hand end of the threading spindle is a reversing shaft by means of which a left-hand rotation may be given the shaft when left-hand threads are to be cut. The threading die or tap-holder on the tool-slide is fitted with a pusher that presses against the rear of the holder to engage the threading die or tap on the work, after which it "leads" itself on. Spring fingers prevent the threading-die holder from turning when in action. This machine at the present time is built in four sizes; namely, $\frac{5}{8}$ by $3\frac{3}{4}$ inches; 1 by 5 inches; $1\frac{5}{8}$ by 7 inches; and $2\frac{1}{2}$ by $9\frac{1}{2}$ inches.

CHAPTER IV

AUTOMATIC SCREW MACHINE TOOL EQUIPMENT

THE various cutting tools used on automatic screw machines for external and internal machining operations include form tools for accurately producing irregular shapes in duplicate, box-tools, hollow mills, shaving tools for light finishing cuts, recessing tools, drills, reamers, counterbores, centering tools, knurling tools, cutting-off tools, threading dies, taps, etc. There are also many special designs, some of which are necessary for making a given part on the screw machine, whereas others are used to obtain a higher rate of production than would be possible with regular or standard tool equipment. The most important tools, especially of the class that is adapted to general work, will be described. Most of these tools were designed for use on certain screw machines, although the same general types, in practically all cases, may be applied to screw machines made by other manufacturers, with such modifications regarding size, etc., as may be necessary owing to variations in the design of the machine.

Circular Forming and Cutting-off Tools. — When a part is to be produced on the automatic screw machine, the successive order of the operations and the kind and number of the cutting tools required should be decided upon before designing the cams, assuming that the machine is of the type requiring special cams for each job. The method of applying a forming tool varies somewhat according to the shape and proportions of the work.

A simple application of a circular forming tool is illustrated by the diagram to the left in Fig. 1. This tool *A* is attached to a holder which is mounted upon the cross-slide of the machine; the cutting-off tool is located on the opposite side, as the illustration indicates. The stock is first fed out against the stop in the turret and then the forming tool *A* moves in, turning the body and the conical head; just as the tool *A* is finishing, the cut-off tool *B* moves in and severs the part from the bar. The body of this screw could be turned by a tool held in the turret, but, when using a machine of the Brown & Sharpe type, a tool held on the cross-slide is usually preferable, because the work can be done more rapidly. This method is recommended when the length of the work does not exceed 2½ times the smallest diameter *A* of the part when finished; parts that are longer than this are too flexible to be turned by a cross-slide tool.

Another example is shown to the right in Fig. 1. In this case, the forming tool *C* turns the part *c* and *e*. Then a die in the turret threads the end after which the tool *D* moves in and serves the finished piece from the bar of stock and, at the same time, forms the part *d* for the next screw. The stock is then fed out against the stop in the turret and the operation repeated.

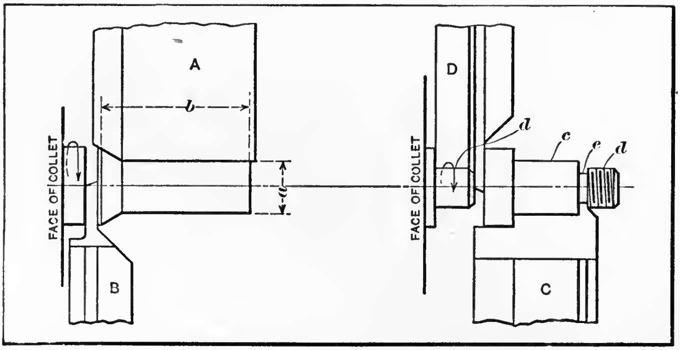

Fig. 1. Application of Forming and Cutting-off Tools

Methods of Applying Circular Forming Tools. — When turning short screws on a Brown & Sharpe machine with circular forming and cutting-off tools, as indicated at *A* Fig. 2, if the time utilized by the tools will not permit revolving the turret for locating the stock in position for the next successive feeding movement of the stock, two sets of tools, that is, two stops and two die-holders should be used in the

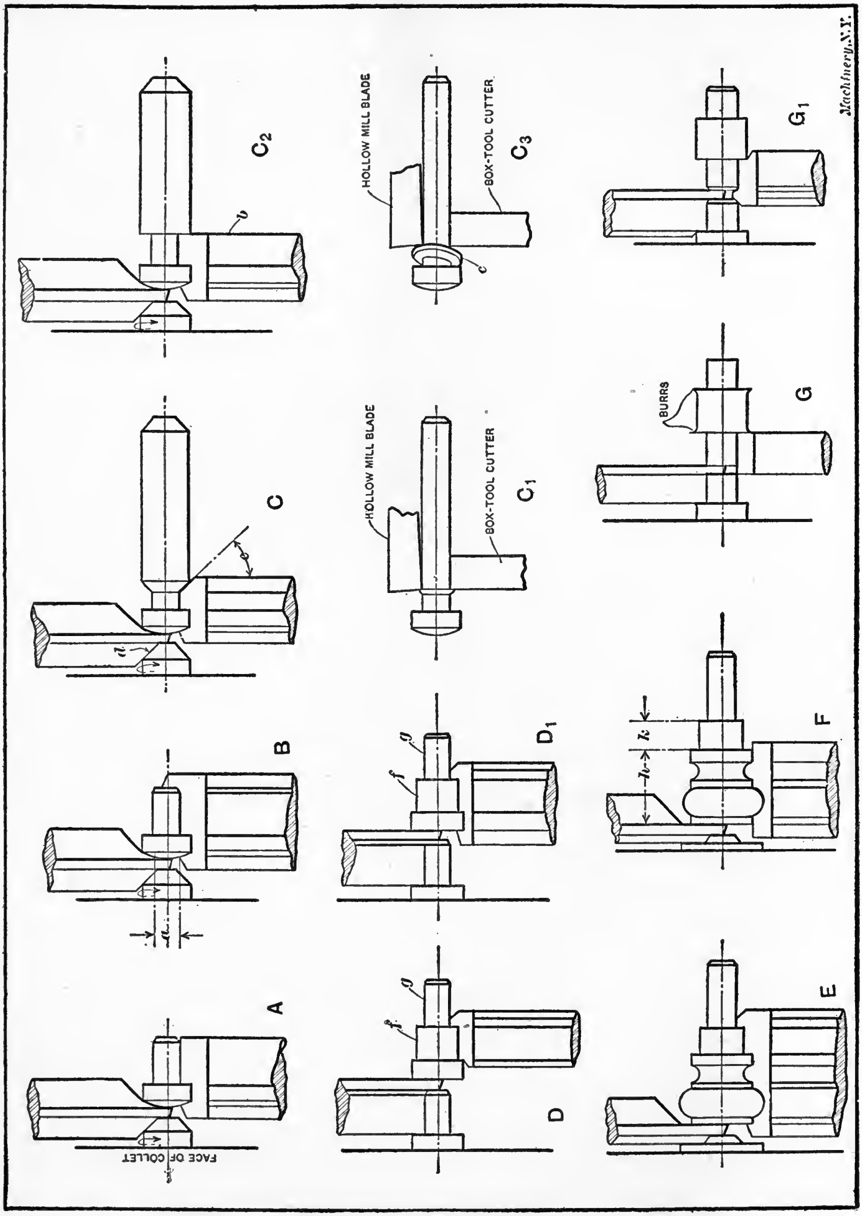

Fig. 2. Examples of Operations performed by Circular Forming and Cutting-off Tools

turret. The method shown at *B* is not to be recommended, because the feeding of the stock varies to such an extent that the forming tool will break off the screw when the latter has been reduced to a diameter *a* by the forming tool, in case there is an excessive amount to face off of the end of the stock. As the turret would require to be indexed, in any case, to clear the arm of the slotting attachment, the screw end could be finished by a tool in the turret with little loss of time as compared with the method shown at *B*, although the latter may be employed when part *a* is large in diameter and the screw is short and stiff.

When a box-tool or hollow mill follows the forming operation, when turning a comparatively long screw or bolt as indicated at *C*, the forming tool should be beveled as at *e*, as this leaves a beveled shoulder on the work, so that, when the box-tool or hollow mill reaches the formed surface, it completely removes the superfluous material as at C_1 without leaving the objectionable ring which would be produced if the face of the forming tool were square, as indicated by the diagrams C_2 and C_3. This ring of metal *c* prevents the finishing box-tool or die from being fed up to the shoulder. The cutting-off tool should bevel the end of the stock as at *d* (diagram *C*), so that the box-tool will have a light cut until the back-rests have a good support. This beveled or pointed end also locates a hollow mill and equalizes the cutting action on the teeth.

The method illustrated at *D* may sometimes be used to advantage when making shouldered screws or other pieces of similar form. This method, however, is not recommended when considerable accuracy is required, because a slight eccentricity in the spring collet would cause part *f* to be out of true with part *g*. For accurate work, the part *g* should be rough-turned with a cut-off tool and a light finishing cut taken with a box-tool held in the turret. The forming tool shown at D_1 is so shaped that it moves the burr from the screw-head.

When applying circular forming tools, the gaging of the work should be carefully considered, because in some cases, when irregular shapes are to be formed, it may be possible to use a forming tool which will greatly simplify the method of gaging the finished work. The piece shown at *E* in Fig. 2 will require a box-tool, a forming tool, and a cutting-off tool, but, when using the forming tool shown, it is simply necessary to measure the diameter and over-all length, and the latter does not require to be very accurate. Another method of producing the same part is shown at *F;* three tools are used as before, but the cutting-off tool finishes the work to length *h*, whereas the box-tool finishes the shoulder to length *k*. In this case, a more expensive gage will be necessary, and considerable extra time will be required for setting up the tools after grinding. It is generally necessary to provide means for removing the objectionable burr made by turning tools, as indicated at *G*. In order to remove these burrs, forming tools are frequently given beveled edges as indicated at G_1.

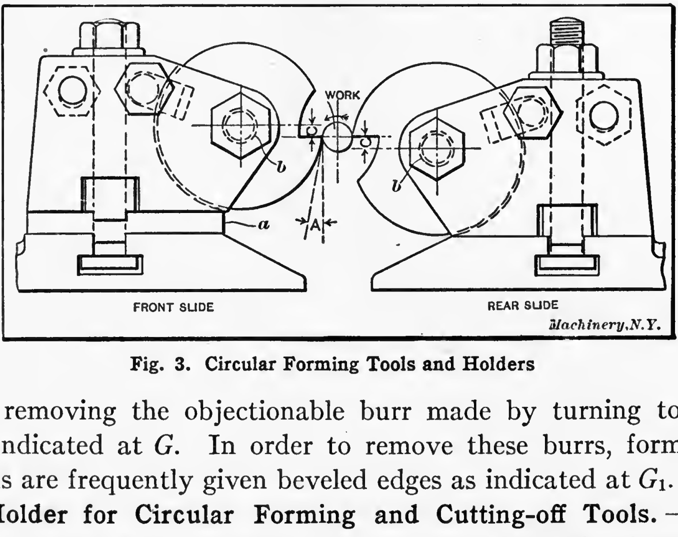

Fig. 3. Circular Forming Tools and Holders

Holder for Circular Forming and Cutting-off Tools.—In order to prevent chattering, it is necessary to hold a forming tool rigidly. The Brown & Sharpe type of holder shown in Fig. 3 provides a rigid support for the tool and includes suitable adjustment, provision for periphery clearance, as well as means for adjusting the tool at right angles to the work. The tool is firmly clamped against the face of the holder by means of a cap-screw *b* in the center and a clamping bolt which grips the rear side of the tool and prevents it from turning while cutting.

Arrangement of Circular Tools. — When applying circular tools to automatic screw machines, their arrangement has an important bearing on the results obtained. The various ways of arranging the circular tools, with relation to the rotation of the spindle, are shown at *A*, *B*, *C*, and *D*, in Fig. 4. These diagrams represent the view obtained when looking towards the chuck. The arrangement at *A* gives good results for long forming on brass, steel, or gun-screw iron, for the reason that the pressure of the cut on the front tool is downward; the support is more rigid than when the forming tool is turned upside down on the front slide, as shown at *B;* here the stock, turning up towards the tool, has a tendency to lift the cross-slide, causing chattering; therefore, the arrangement shown at *A* is recommended when a high finish is desired.

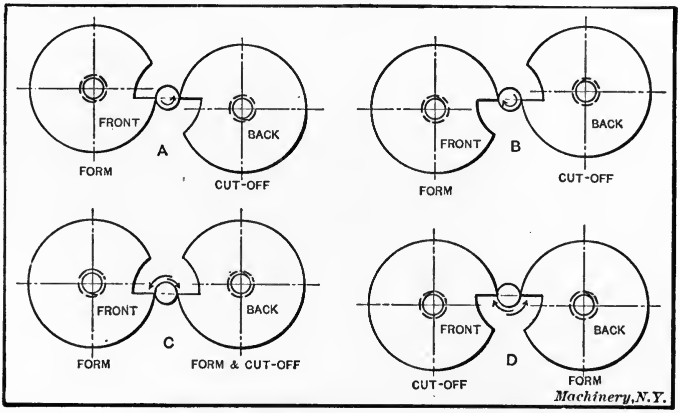

Machinery, N.Y.

Fig. 4. Different Arrangements of Circular Tools

The arrangement at *B* works satisfactorily for short steel pieces which do not require a high finish; it allows the chips to drop clear of the work, and is especially advantageous when making screws, when the forming and cut-off tools operate after the die, as no time is lost in reversing the spindle. The arrangement at *C* is recommended for heavy cutting on large work, when both tools are used for forming the piece; a rigid support is then necessary for both tools and a good supply of oil is also required. The arrangement at *D* is objectionable and should be avoided; it is used only when a left-hand thread is cut on the piece and when the cut-off tool is used on the front slide, leaving the heavy cutting to be performed from the rear slide. In all "cross-forming" work, it is essential that the spindle be kept in good condition, and that the collet or chuck have a parallel contact upon the bar which is being formed.

Clearance for Circular Tools. — In order to provide periphery clearance on circular tools, the center of the tool is located a certain amount above or below the center of the work, as shown in Fig. 4. On account of this offset of the cutting edge, the actual difference in the diameters of different surfaces of the forming tool does not exactly correspond with the same relative dimensions on the work. For instance, if a circular forming tool has two or more diameters, the difference in the radii of the steps on the tool will not be exactly the same as the difference in the steps on the work.

There is a difference of opinion regarding the question of side clearance for circular tools, some advocating considerable clearance, others only a slight amount, or no clearance at all. When tools heat up and "welding" occurs, this may not be due to the lack of clearance, but rather to the poor quality of cooling lubricant used. Side clearance is necessary in some cases, but tools made without clearance should be ground smooth on the sides and a good grade of lard oil used as a cutting lubricant.

Tool-holders for Flat Forming Tools. — Flat or straight forming tools are used on automatic screw machines instead of circular forming tools, in some cases, especially when the part to be formed is quite large and a very rigid tool is desirable. The toolpost shown at *A* in Fig. 5 is extensively used on the Cleveland automatic machine. The base *a* is bolted directly to the cross-slide and the top face of this base is beveled to an angle of about 15 degrees. The bevel wedge *b* has a tongue which fits into a corresponding groove in the base and the top face of the wedge has a tongue that fits into another groove in the flat forming tool *c*. The forming tool is adjusted vertically by screw *d*, the head of which engages one of a series of slots in the wedge. The toolpost shown at *B* is used for holding light forming tools or for cutting-off tools that are not of the blade type. It consists principally of a clamping strap *e*, a base *f*, and a tapered wedge *g*, which is adjusted by screw *h*.

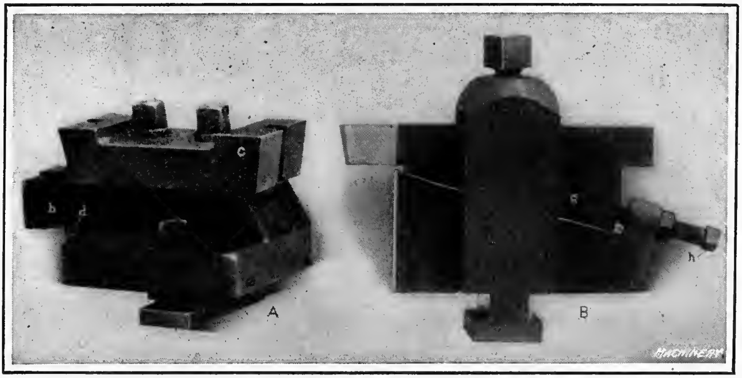

Fig. 5. Two Types of Flat Forming Tool-holders

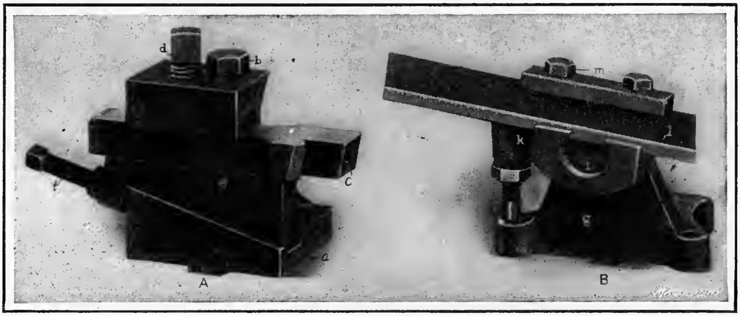

Fig. 6. Open-side Forming Tool-holder and Standard Universal Cut-off Tool-holder for Cut-off Tools of the Blade Type

The design of tool-holder shown at *A* in Fig. 6 is known as an *open-side forming toolpost.* It is used for holding forming tools having square shanks. The forming tool is clamped by set-screw *b* and is adjusted to the required height by wedge *e* and screw *f*. This type of toolpost is adapted to holding inexpensive forming tools. The toolpost shown at *B* in Fig. 6 is known as a *universal cutting-off tool-holder.* The swinging tool-holder *h* is pivoted on bolt *i*, which also clamps the holder, ratchet, and post together. A threaded stud *j* supports the ratchet *k* and this ratchet gives adjustment to the tool-holder *h*. The blade type of cutting-off tool *l* is clamped in place by two bolts *m*. This tool-holder may be used on either the front or the rear of the cross-slide. As shown in the illustration, it is set for the rear position. When it is to be used on the front of the cross-slide, the position of the tool-holder *h* may be reversed so that the blade is located below the center.

Tools for Cutting Off Finished Parts. — There are two general types of tools used on automatic screw machines for cutting off finished parts from a bar of stock; namely, the *blade* type and the *circular* type. The blade type consists of a narrow straight blade which is clamped in a suitable holder. Tools of this kind serve only to sever finished parts, whereas the circular type are, in many cases, so formed that, as the blade cuts off the finished piece, another cutting edge on the tool either bevels or rounds the end of the part being severed or performs some other operation, such as "pointing" the bar of stock or reducing its diameter at the end, preparatory to making the next piece. The view to the right in Fig. 1 illustrates how a cutting-off tool is used to turn down the end of the next succeeding piece while cutting off the one that has just been finished. Other similar applications of circular cutting-off tools are shown in Fig. 2.

The edge of a cutting-off tool is ground at an angle, so that it will sever the finished part completely by a cutting action. If the cutting edge were parallel with the axis of the work, the latter would break off, due to the pressure of the cut before the cutting edge reached the center, so that the end of the severed part would not be finished neatly, but, with the cutting edge at an angle, this does not occur. This angle α (see Fig. 2, Chapter VII) for different materials should be about as follows: For drill rod and tool steel, $\alpha = 10$ degrees; for Norway iron and machine steel, $\alpha = 15$ degrees; for gun screw iron, $\alpha = 18$ degrees; for hard brass, $\alpha = 20$ degrees; for soft brass and copper, $\alpha = 23$ degrees.

The thickness of the blade of a cutting-off tool should be varied according to the diameter of the work, the angle of the cutting edge, and the hardness of the material to be operated upon. The thickness of the blade of an ordinary circular cutting-off tool which is not required to form part of the work may be determined by the following formula:

$$T = \sqrt{\frac{D \times \cot \alpha}{3}} \times 0.14,$$

in which T = thickness of blade in inches;
D = diameter of stock in inches;
α = angle between cutting edge and axis of work.

When the cutting-off tool is also used for forming, the blade is shorter and the thickness may be about three-fourths of that obtained by the preceding formula. In any case, when a tapped hole passes through the work, the cutting-off blade should be wide enough to remove the portion cut by the chamfered end of the tap.

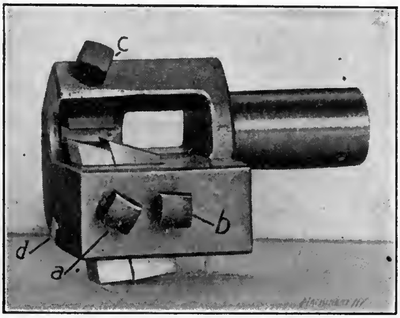

Fig. 7. Box-tool designed for General Work

Rake of Forming and Cutting-off Tools. — For cutting brass, the top face of the cutting part of the tool is usually in the same plane as the axis of the work, although, in some cases, especially for soft brass, a negative rake of about 5 degrees is given the cutting edge. For cutting other materials, forming and cutting-off tools will operate more satisfactorily if given a positive rake. The angle for drill rod and tool steel should vary from 8 to 10 degrees; for gun screw iron, 12 degrees; for machine steel, 15 degrees; for Norway iron, 18 degrees; for copper and aluminum, from 25 to 30 degrees. For cutting steel and iron, the cutting edge of the tool should be at the same height as the center of the work, whereas for cutting brass, bronze, copper, and aluminum, better results are sometimes obtained by setting the cutting edge slightly above the center, although for such material as Tobin bronze, the cutting edge should be set the same as for steel.

Box-tools. — Box-tools are made in a great variety of designs and types which differ chiefly in regard to the number and arrangement of the cutters and the method of supporting the part being turned. Most of the types described in the following have been extensively used. The box-tool shown in Fig. 7 carries two cutting tools. The tools rest on a pin *d* and are held by set-screws *a* and *b*, and by two other set-screws, not shown, which are on the under side of the box-tool. The support, which is of the V-type, is located at the back of the box-tool at an angle of 45 degrees with the vertical center-line, and is held by the set-screw *c*. This box-tool is used for general work, for turning both one and two diameters, as required. When one diameter is being turned, the cutter in the rear is pushed back.

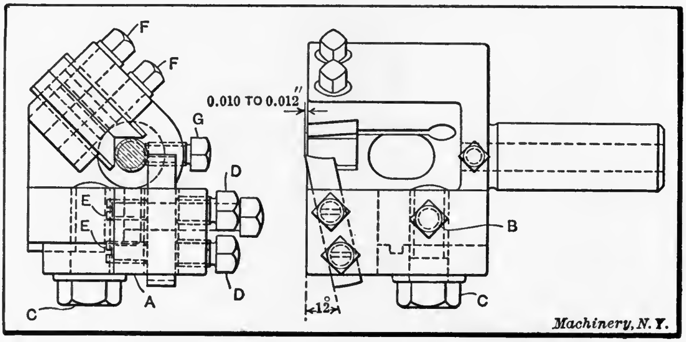

Machinery, N.Y.

Fig. 8. Finishing Box-tool largely used for Steel Work

In Fig. 8 is shown a finishing box-tool which is used largely for steel work. In this box-tool, the turning tool is held in an adjustable block *A* which is adjusted up and down on the body of the holder by the set-screw *B*, and held to the body by the cap-screw *C*. A projection is formed on the body of the box-tool and a corresponding guiding groove is cut in the block. The turning tool is held by means of two set-screws

D and the headless screws E. These latter are for adjusting the turning tool, in order to increase the clearance between the tool and the periphery of the work. The V-support is held in beveled grooves in the body of the holder, by two screws *F* which pass through the two parts of the body separated by a saw cut, thus binding them together. The cutting edge of the turning tool is located from 0.010 to 0.012 inch in advance of the face of the supports. A hole is drilled through the shank of the box-tool for holding a pointing tool or other internal cutting tool, which is held with the set-screw *G*.

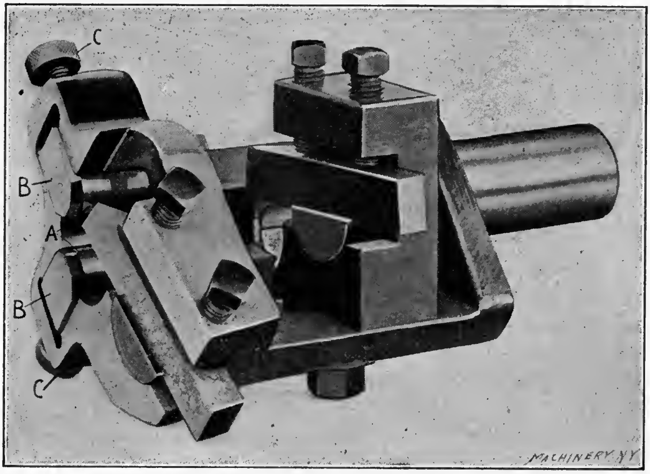

Fig. 9. Box-tool of the Roller-support Type

In Fig. 9 is shown a box-tool of the roller-support type, which is provided with a roller support for the front cutter and a V-support for the rear cutter. The supports *A* are held by pins in the two blocks *B*, which are adjusted in and out by the knurled-head screws *C*. The blocks *B* are held to the body of the box-tool by cap-screws which are tapped into them. A slot is cut in the body of the holder in which the bodies of the cap-screws slide, thus providing adjustment for turning different diameters.

A simple type of shaving box-tool is shown at *B* in Fig. 10. This tool is provided with V-supports which are adjusted by the collar-head screw *e* and are clamped in position by means of the clamp bolts *f*. The turning tool *g* is adjusted by a collar-head screw *h* and is held in position by a set-screw *i*. This tool is of very simple construction and is used where only one diameter is to be turned at a time.

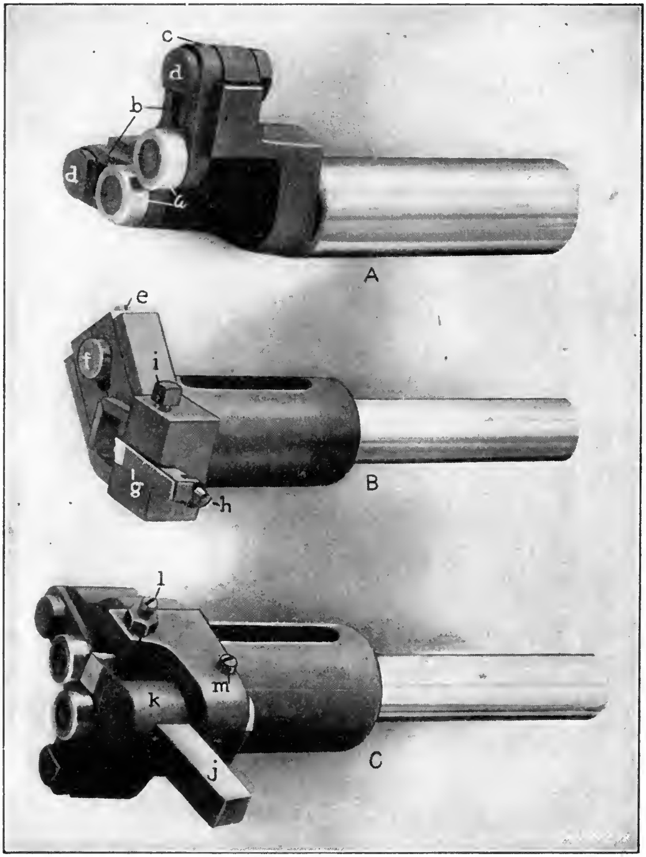

Fig. 10. Roller Steadyrest — Shaving and Roughing Box-tools

The roughing box-tool *C*, Fig. 10, is provided with roller supports, and the turning tool *j* is held in a square hole provided in the stud *k;* this stud clamps the turning tool against the face of the box-tool holder. Adjustment for height is secured by means of the set-screw *l*. Two set-screws, one of which is shown at *m*, act as an adjustment for stud *k*.

The box-tool shown at *A* in Fig. 11 holds three turning tools, and can also carry a centering tool or drill, which is held in the shank of the holder. The flat base *a* has two grooves extending its full length, in one of which the three holders *b* for the cutting tools are held, and in the other two the brackets *c* for roller supports. This box-tool can be used for turning three different diameters at one setting and is used either for roughing or finishing cuts. The roller supports may be adjusted to lead or follow the cutting tools by simply moving them along the slot in the holder. The brackets carrying the

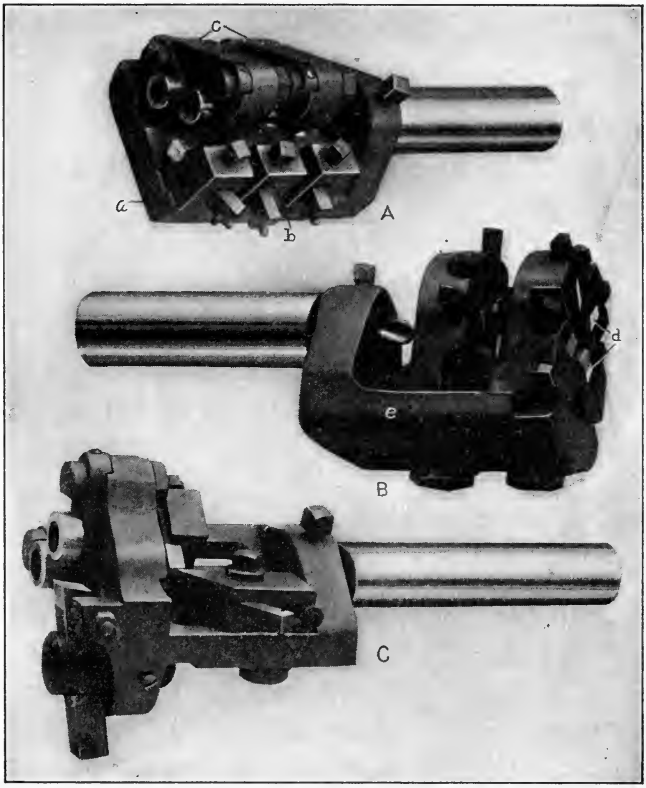

Fig. 11. Multiple Turning Tool, Adjustable Hollow Mill, and Standard Three-tool Box-mill

supports can be placed in any desired position and the holders for the cutting tools can also be adjusted to suit the various diameters and lengths of shoulders on the work.

An adjustable type of "hollow roughing mill" or box-tool is shown at *B* in Fig. 11. This is supplied with two cutter heads, each containing four cutters *d*. The flat arm *e* of the box-tool has a spline cut the full length, and also a slot through which the studs of the cutter heads pass. The studs are made integral with the cutter heads and are clamped by nuts as shown. The four cutters in each head are adjusted by removing the head from the arm and placing it on a stand fitted with a plug gage of the same diameter as the work to be turned. This stand holds the cutter head in the correct relation to the plug gage, so that the tools can be brought into contact with the plug gage and then clamped. This tool which is adapted to rough turning cast iron is supplied with a hole in the shank for holding a centering tool or drill. The heads for the cutters are adjustable along the body of the holder.

The box-tool shown at *C* in Fig. 11 is of the open-type construction and is supplied with one turning tool clamped to its face, the work being supported at this point by roller supports. The second tool, which is set at an angle and held down by a heel clamp, can be used for turning a second diameter; the work is supported opposite this tool by a V-support.

Box-tools of Over-cut Type. — The type of box-tool commonly used on the "Acme" multiple-spindle automatic is known as the over-cut type; this usually carries two cutting tools as shown in Fig. 12. The front cutting tool is set "tangentially" to the work, while the rear cutter is radial in relation to the center of the work. The front tool, when used for taking a finishing cut, is set about 0.010 inch in advance of the supports and is ground a little high at the rear to provide for clearance. The roller supports *c* which are commonly used are shown dismantled at *D* and fastened to the holders at *E*. The support holders are held to the box-tool body by a cap-screw *e* and are backed up by large-headed screws *f*. The rear cutting tool *h* is held in a tool-holder which is retained in a V-groove in the body of the box-tool by a cap-screw *k* and is provided with an elongated slot for adjustment.

The box-tool shown at *H* is known as a "round box-tool" because of the rounded shape of its body. It is provided with a solid support which is very rarely used except on small brass work. It is particularly suited for use in the "first" position when the forming cut overlaps the box-tool cut. This type of box-tool is also provided with roller supports for general work.

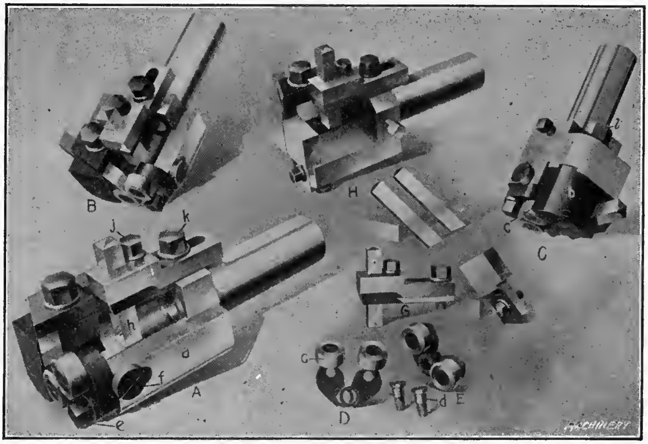

Fig. 12. Group of Over-cut Box-tools used on the "Acme" Multiple-spindle Automatic Screw Machines

Spring-releasing Box-tool. — The regular box-tool, when used for taking heavy roughing cuts, usually leaves a spiral mark on the work in backing off. This is due to the extreme point of the cutting tool becoming heated, and a certain amount of the cuttings sticking to it, thus forming a ragged edge, which produces an objectionable mark on the work when the tool is withdrawn. To overcome this difficulty, the National-Acme Mfg. Co. designed the "spring-releasing box-tool" illustrated in Fig. 13. In this design, the front cutting tool is removed from the work on the back stroke, and is thus prevented from producing an objectionable mark. The front part of the body *A* is cut out as shown, and a block *C* is held to it by a bolt and nut. This block is provided with a tongue so that it is adjustable in a vertical direction on the face of the box-tool body. The tool-holder *B* is provided with an angular groove which fits over a corresponding tongue on the face of the block *C*. The tool-holder is held to block *C* by a shouldered screw *E*, the diameter of which is smaller than the elongated hole in the tool-holder, to provide for a slight movement. Screw *E* is backed up by headless screw *F* to prevent it from loosening when the tool-holder is moved back and forth on it.

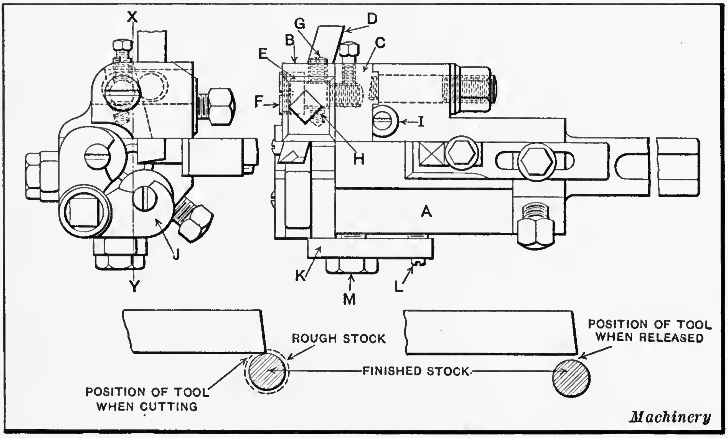

Fig. 13. Spring-releasing Type of Box-tool

In the tool-holder *B*, there is a spiral spring *H* which acts on a plunger, the latter bearing against the body of the shouldered screw *E*. The action of this spring draws the tool-holder forward toward the center-line of the box-tool body, its movement being stopped by the headless screw *G*. The tool-holder *B* works on a tongue which is at an angle with the line *X Y*. When the front cutting edge of the tool strikes the work, it compresses the coil spring *H*, forcing the tool and holder back until its movement is stopped by the shouldered screw *E*. Then when the main tool-slide stops advancing and begins to retreat, the pressure on the cutting tool is released, allowing the spring to force the tool-holder up on the angular tongue and thus raise the tool from the work as shown by the diagrams at the lower part of the illustration. The block *C* carrying the tool-holder is adjusted vertically for turning different diameters by means of the collar-head screw *I*.

The roller supports are held in holders *J* which are backed up by blocks *K*; these blocks are held in place by a cap-screw *M* and drilled out to receive a headless screw *L*, the latter forming a heel on which the rear part of the block rests. As the diameter of the work increases, the screw *M* is released, allowing the roller-support holders *J* to drop back to bring the rolls to the proper position. Then the screw *L* is brought out until the block *K* is practically in a parallel position, when the screw *M* is tightened.

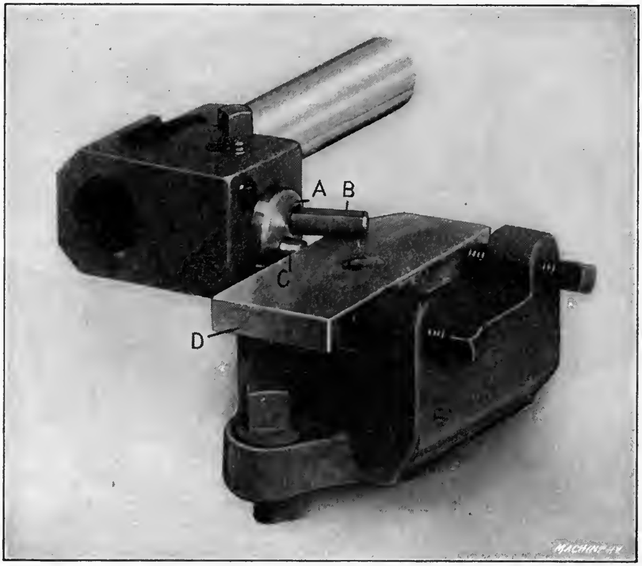

Fig. 14. Turning Tool for Taper or Irregular Shapes

Taper-turning Box-tool. — The box-tool shown in Fig. 14, which is adapted to the turning of taper or irregular forms, is held by a shank in the turret of the machine and is supplied with a bushing on the front end which guides the work. The circular slide *A* carries the turning tool *B* and is fitted with a pin *C* which comes in contact with the adjustable guide *D* held on the cross-slide. When the turning operation is completed, the cross-slide recedes, allowing a spring located inside the holder to move the slide *A* back to its original position. The guide *D* held on the holder *E* which is attached to the cross-slide can be made of any shape, so that any irregular form as well as tapered work can be secured. This guide is fulcrumed on a pin in the bracket and is supported and adjusted by two set-screws. This tool is used on the Cleveland automatics.

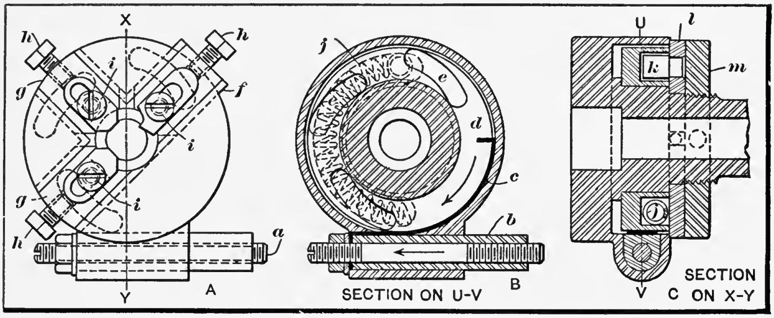

Fig. 15. Taper-turning Tool

A taper-turning tool made by the Brown & Sharpe Mfg. Co., and one that is recommended for accurate work, is shown in Fig. 15. When in operation, a block or plate, which can be set at any angle desired, presses on the point of screw *a*, which forces the holders carrying the supports and turning tool out from the center. The screw *a* is tapped into sleeve *b* and moves the latter in the direction of the arrow. Now as the sleeve *b* is forced in, it pulls on the band spring *c*, which is attached to the circular block *d*, thus turning the latter around in the direction of the arrow. The spring is fastened in a slot cut in the circular block *d*. The circular block *d* has eccentric projections *e* formed on it, which fit in slots cut in the tool-holder *f* and support-holders *g*. As the sleeve *b* is forced in, it carries the spring *c* forward, thus rotating the circular block *d* in the direction of the arrow and forcing the holders carrying the supports and turning tools out from the center.

In the end view shown at *A*, the turning-tool and support-holders are shown in the position they occupy before screw *a* engages the operating block. The supports and turning tool can be adjusted independently of each other by the set-screws *h*, and are held by the screws *i*. After the turret drops back, disconnecting the screw *a* from the block, the turning tool and supports are returned to their former position by means of the coil spring *j* (shown at *B*). The spring *j* presses against a pin *k* (shown at *C*) which is riveted to a plate *l*; this plate is held to the shank of the holder by a pin fitting in a slot. Plate *l* is held up against the outer casing of the holder by the nut *m*, screwed onto the shank of the holder.

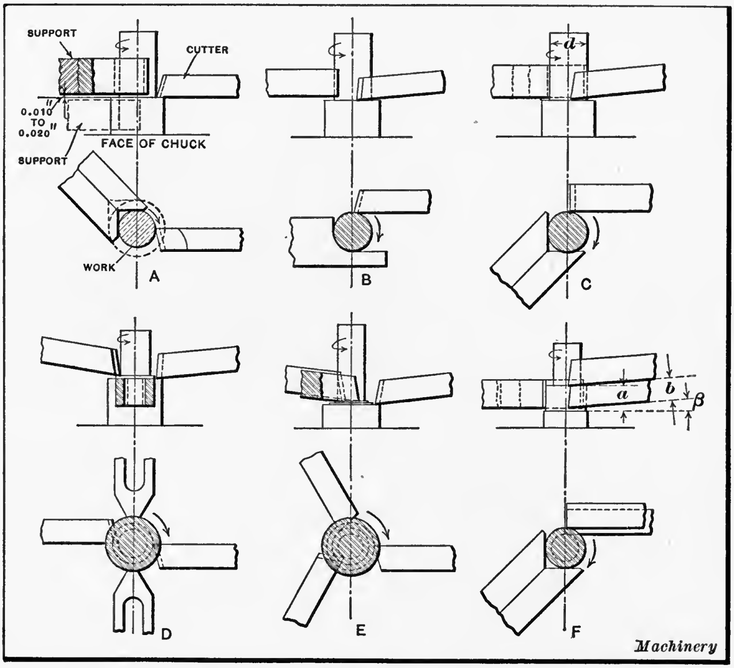

Fig. 16. Various Methods of Applying Box-tool Cutters to the Work

Methods of Applying Box-tool Cutters. — Box-tool cutters are applied to the work either radially as shown at *A*, Fig. 16, or tangentially as illustrated at *B* and *C*. The radial position for the cutter is more commonly used for brass work, whereas the tangential cutter is used for all classes of steel work, and also for brass work in some cases. The cutting edge of a radial cutter is set above the horizontal center-line of the work an amount that is usually about 0.02 times the diameter which is being turned. This is the preferable method of applying the turning tool for taking roughing cuts on brass rods. If the stock is rough or of irregular shape, the cutter should precede the support an amount varying from 0.010 to 0.020 inch, but, if the bar is cylindrical and has a finished surface, the support, when taking roughing cuts, should precede the turning tool, as shown by the dotted lines at *A*. The tangential cutter shown at *B* is set to take a roughing cut from a bar having a comparatively rough surface. The tangential cutter shown at *C* is set for taking a finishing cut in steel. The cutting edge is located back of the center of the work an amount equal to 0.10 of the diameter *d*, being turned. For cutting brass, the tangential cutter is set in line with the center, or, in some cases, slightly in advance of the center.

A method of applying two turning tools for roughing down steel work is shown at *D*, and at *E* three turning tools used for the same purpose. For taking roughing cuts on brass, where considerable material is to be removed, a hollow mill is generally used, but the method shown at *D* can sometimes be employed to advantage. At *E* no supports are used, as the tools support the stock. These tools can either be set radially as shown, and a slight amount in advance of each other, or tangentially and at varying heights, so as to distribute the cuts equally among the tools. For taking roughing cuts on steel, it is preferable to set the cutters tangentially to the work.

At *F* is shown a method of applying two tangential turning tools for turning down two diameters on a piece of work. This method is used when the distance *a* is not much greater

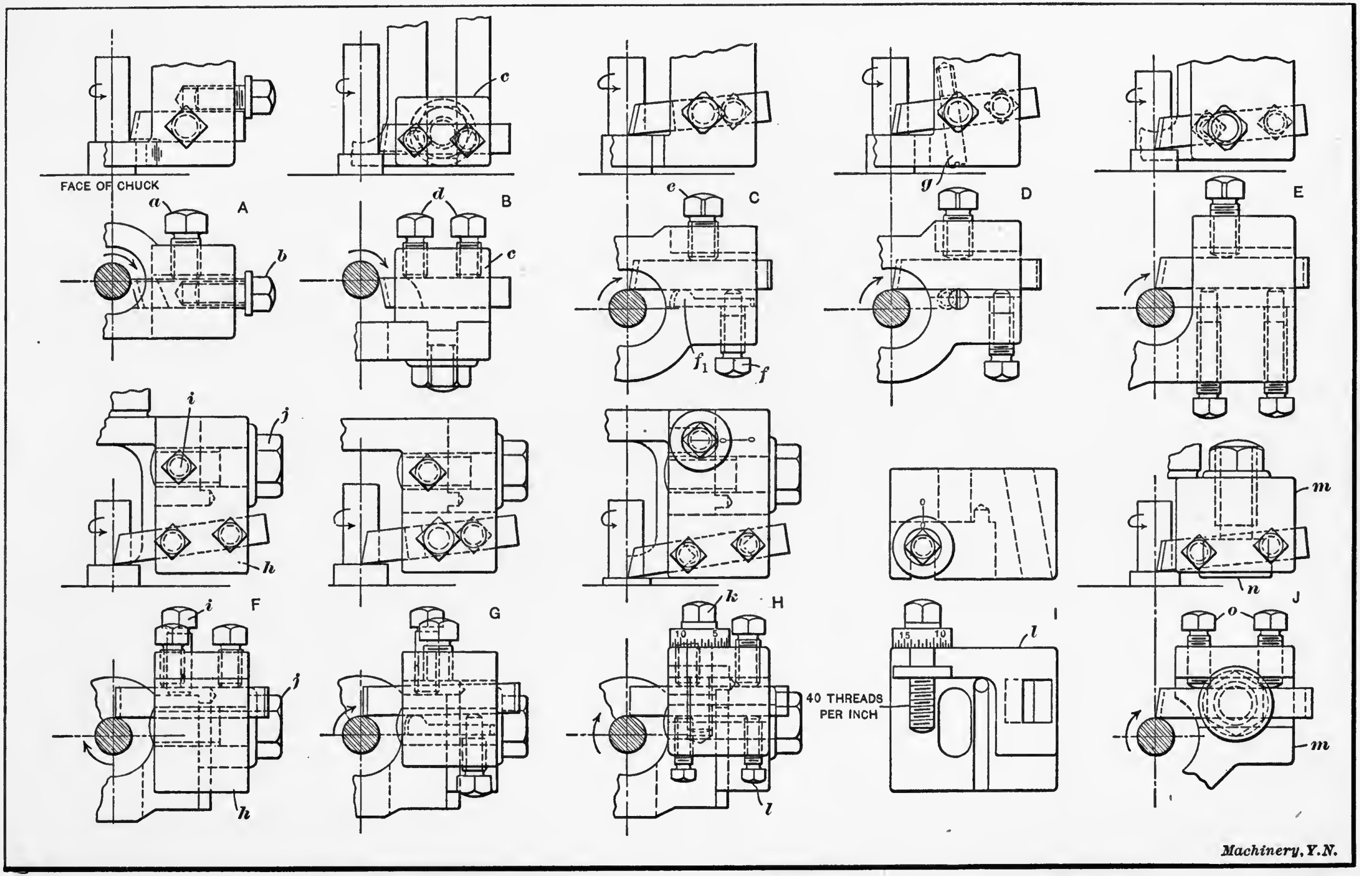

Machinery, Y.N.

Fig. 17. Holding and Adjusting Box-tool Cutters for Various Conditions

than from $\frac{1}{2}$ to $\frac{5}{8}$ inch. For a larger dimension a, it is generally advisable to use two separate box-tools, provided there is sufficient room in the turret. When turning tools are used in this manner, the thickness b of the first tool should be such that the second tool, when set tightly against the first one, will turn the shoulder to the desired length. To illustrate, assume that $a = 0.375$ inch, $\beta = 10$ degrees; then $b = a \times \cos \beta = 0.375 \times 0.9848 = 0.369$ inch. When two turning tools are used in this manner, they should be ground on all surfaces and should also be made a good fit in the square or oblong hole cut in the body of the holder to receive them.

Holding and Adjusting Box-tool Cutters. — At *A* in Fig. 17 is shown a method which is commonly used for holding a box-tool cutter for brass work. A square hole is cut in the body of the holder to receive the cutter, the latter being held by a set-screw *a*. The cutter is adjusted for different diameters by the collar-head set-screw *b* which bears against the rear end of the tool. By cutting a slot in the turning tool to fit the collar on the screw, this screw may be used for adjusting the tool both in and out.

The method shown at *B* for holding the turning tool is used particularly for brass work. The turning tool is held in the block *c* by two set-screws *d*, the block being adjustable along the body of the holder. The block *c* has a projecting shank which passes through the body of the holder and is fastened to it by means of the nut and washer shown. This method of holding the tool is very convenient for certain classes of work, especially when different diameters are required, as it is possible to have one or more blocks for holding the turning tools.

A method of adjusting and holding a tangential cutter is shown at *C*. The cutter is set at an angle from the face of the box-tool, and is held in the body of the holder by two set-screws *e* and *f*. The tool rests on a small block f_1, thus allowing it to be adjusted for turning different diameters, the two set-screws being used in connection with this block for adjusting.

A method of holding the turning tool somewhat similar to that just described is shown at *D*. The tool rests on the body of a screw *g* instead of on a block. These two methods of adjusting the tool can only be used for certain classes of work. A method which allows of more adjustment is shown at *E*. The tool is adjusted and held by three set-screws, thus allowing it to be adjusted for various diameters, with the face of the tool held in a place parallel to the horizontal center-line.

The methods shown at *C*, *D*, and *E* are used principally for roughing box-tools. At *F* is shown the method of adjusting the turning-tool holder which is usually applied to finishing box-tools. The tool is held in a block *h*, which is adjusted up and down on the body of the holder by means of set-screw *i*; the block is held, when in the desired position, by cap-screw *j*. This block has a groove in it which fits on a tongue formed on the box-tool body, thus holding the tool-holder rigidly. At *G* is shown a method similar to that just described, but the turning tool is held in the holder in a manner similar to that shown at *C*. By this means, the cutter may be set at a slight angle from the horizontal center-line, thus giving it more clearance, as is sometimes necessary, especially when cutting steel. A slight adjustment of the tool, independently of the tool-holder, is also possible.

With the design shown at *H* and *I*, a micrometer screw is used for setting the box-tool cutter to the correct diameter. This micrometer screw *k* has two shoulders and is screwed into the body of the holder, the body of the screw being made a good fit in the block shown in detail at *I*. A 40-pitch thread is cut on this screw, so that for one revolution of the screw the turning tool is moved a distance equal to 0.025 inch. The block is held to the body of the holder in the same manner as that shown at *F* and *G*.

A good method of holding two or more turning tools for roughing is shown at *J*, the holder being made with the desired number of projecting lugs or tool-holders *m*. The tool is held in a stud *n*, which has a square hole cut in it to receive the tool. This hole is cut at an angle with the face, so that the tool is set at the desired angle. Two set-screws *o* are used to prevent the tool from turning under the pressure of the cut, and also to permit of a slight adjustment of the tool. This method of holding a turning tool is used mostly for roughing work.

Box-tool Work Supports. — The type of support to use and the method of applying it are governed largely by the following conditions: Shape of the stock, whether round or otherwise; character of the cut, whether taper or otherwise; nature of the material, whether soft or hard; number of different diameters to be turned; length of the work being turned; clearance allowable between the face of the circular form tool and the box-tool.

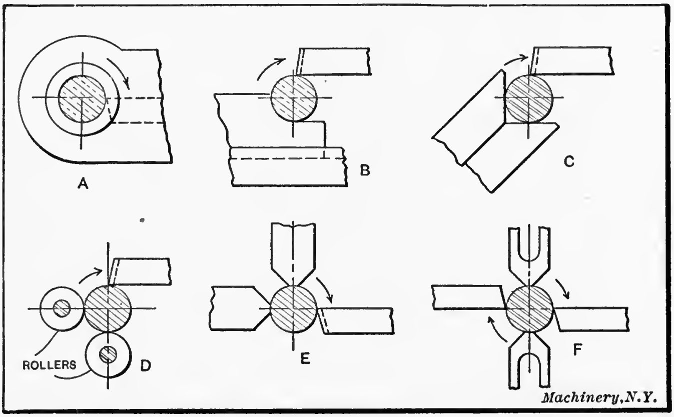

Fig. 18. Methods of Applying Box-tool Supports to the Work

At *A* in Fig. 18 is shown a box-tool support used in roughing box-tools. This support surrounds the work and precedes the turning tool. It is used mainly for turning down cylindrical work in which the finished diameter is to be concentric with the part which is not finished, that is, which has not had a cut taken from it. Where the work being turned projects more than five times its diameter from the chuck, and is of large diameter, it is not advisable to use a bushing support, unless the stock is reduced by the circular cut-off tool, in order to weaken it somewhat.

At *B* is shown a support which is sometimes used for finishing box-tools. One objection to the design is that as it does not surround the work, a bar of larger radius than the supporting surface is deflected to one side, thus producing work which is not straight, but slightly tapered. The support shown at *C* is commonly called a "V-support," and has a two-point bearing on the work. The thrust from the tool is against both supports. As a rule, this support should not precede the cutting tool, for the reason that, if the work is not cylindrical in shape, the irregularities of the bar will be reproduced on the work that is turned. This V-support can be used for brass, steel, and similar materials, and gives satisfactory results when it does not precede the turning tool.

In turning cast iron or aluminum, difficulty is sometimes encountered in producing a finished surface on the work. This is usually due to fine chips or dust becoming wedged in between the supports and the work, thus causing an abrasive action which roughens the work. It is, therefore, advisable when turning aluminum or cast iron, to use roller supports. One method of applying the roller supports is shown at *D*. These rollers should be hardened and ground, and it is usually preferable to lap them also, so that they are very smooth. This support is also used when turning machine steel, and is made to bear rather hard against the work, which gives it a burnished appearance. Another support which is sometimes used for cast iron is shown at *E*. This gives a two-point bearing, and allows the tool to be set radially to the work. This support, however, is not as good as the roller type.

At *F* is shown a method of supporting the work when applying two turning tools to it. This method is used principally for roughing down steel work and also when it is necessary to rough down the work from a large to a small diameter in the least possible time. As a rule, supports for box-tools should be made from high-carbon steel, left glass-hard, and given a very smooth finish, which is one of the chief requirements of a box-tool support.

Holding and Adjusting Box-tool Supports. — Various methods of holding and adjusting box-tool supports are shown in Fig. 19. At *A* is shown a common method of holding a bushing support. The support shown at *B* is tongued to the holder and is adjustable in an axial direction. At *C* is shown one method of holding a V-support. A rectangular hole is cut in the body of the holder in which the supports fit. When in position, the supports are held by the set-screw *b*. This method of holding a V-support is commonly used for both roughing and finishing box-tools, when one cutting tool is applied to the work, and sometimes when two cutting tools are used so close together that it is only necessary to support the work at one place. At *D* is shown a method of holding a V-support when it is necessary to apply more than one support to the work, as when turning down to more than one diameter at a time. This support is held in a movable block *c*, which is adjusted along the body of the holder. These last two methods are principally for box-tools used for turning brass or a similar class of materials, in which the cutter is set radially to the work. At *E* is shown a common method of

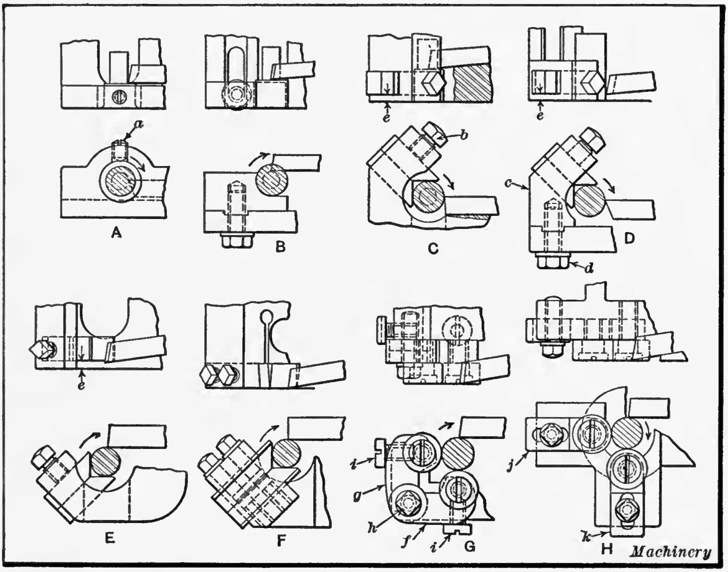

Fig. 19. Methods of Holding and Adjusting Box-tool Supports

applying the V-support to a box-tool used for cutting steel. This method is used when the cutting tool is set tangentially. The methods shown at *C*, *D*, and *E* are limited in their scope, to a certain extent, owing to the fact that they cannot be used in conjunction with a circular form tool when it is necessary to have the box-tool work closer to the forming tool than the thickness of the web *e*. For this class of work, the design shown at *F* is commonly used. This support is beveled and set in a beveled slot cut in the front end of the box-tool body. The body of the holder is split and screws bind the two parts together.

At *G* is shown a method of applying roller supports. These roller supports are held in two movable members, *f* and *g*, which, in turn, are fastened to the body of the holder by the clamping screw *h*. As the clamping screw *h* would not be sufficient to hold these roller-support holders against the pressure of the cut, they are held in the correct position by large-headed screws *i*, which are screwed into the body of the holder. At *H* is shown another method of applying roller supports. In this case, the supports are held on two sliding holders, *j* and *k*, which slide in grooves cut in the box-tool body. They are adjusted in and out to the required diameter, and are held by the clamping screws. There are numerous other methods of holding roller supports, but they are all of a somewhat similar character to those already shown. Naturally, there are various conditions which govern the method of applying these supports. The methods of holding supports, previously described, are those generally used in standard box-tools, and do not include those used for special conditions. Design *H* is preferable usually to the one shown at *G*.

Cutting Angles for Box-tool Cutters. — It is not sufficient to hold a box-tool cutter rigidly and support the work well, to obtain good results, but it is also necessary to have sufficient clearance, and the correct cutting angle on the tool. The tool must have sufficient clearance and rake, so as to remove the material with the least possible resistance and power. The manner in which the tool is applied to the work, and the material on which it operates govern the cutting angle on the tool. Generally, in automatic screw machine practice, the cutter is set radially for turning brass and, when held in this way, the cutting angles are approximately as illustrated in Fig. 20. Tool *A* is for roughing and tool *B* for finishing, the cutting face of the latter being ground parallel for a short distance y equal to approximately one-fifth of the diameter being turned. For steel turning, the cutter should be set tangentially to the work as shown at *C* and *D*. The end of tool *C* should be ground to approximately the following angles:

Cutting Angles for Machine Steel	Cutting Angles for Tool Steel
$a=10$ degrees;	$a=8$ degrees;
$b=10$ degrees;	$b=8$ degrees;
$c=8$ to 10 degrees;	$c=8$ to 10 degrees;
$d=70$ to 72 degrees.	$d=72$ to 74 degrees.

The form of tool shown at *C* is commonly used for roughing cuts, but will not produce an absolutely square shoulder. For finishing cuts, the tool is ground as shown at *D*, which produces a square shoulder. The cutting angles for tool *D* are as follows:

Cutting Angles for Machine Steel	Cutting Angles for Tool Steel
$e=$ from 10 to 12 degrees;	$e=$ from 8 to 10 degrees;
$f=$ from 15 to 18 degrees;	$f=$ from 8 to 10 degrees;
$g=$ from 60 to 65 degrees.	$g=$ from 70 to 74 degrees.

While the cutting face on the tool shown at *D* is straight, it is usually advisable, especially when cutting machine steel and Norway iron, to give more "lip" to the tool, as shown by the dotted line h. The cutting edge of a radial cutter for rough-turning brass rod is set above the horizontal center line of the work, an amount equal to about 0.02 times the diameter being turned. If the stock is rough or of irregular shape, the cutter should precede the support by an amount equal to from 0.010 to 0.020 inch, but, when the bar is cylindrical and has a finished surface, the support for roughing cuts should precede the tool. The face of a tangent cutter should be set back a distance x (see Fig. 20 *D*) equal to about one-eighth the diameter being turned, for tool steel, and one-tenth the diameter, for machine steel. Sometimes, it is also advisable, especially when cutting machine steel, to elevate the tool from the horizontal an angle of from 1 to 2 degrees, to increase the clearance.

Size of Steel for Box-tool Cutters. — For special conditions, the tool is sometimes made of rectangular section, but ordinarily square stock is used. The square sections recommended for box-tool cutters are as follows:

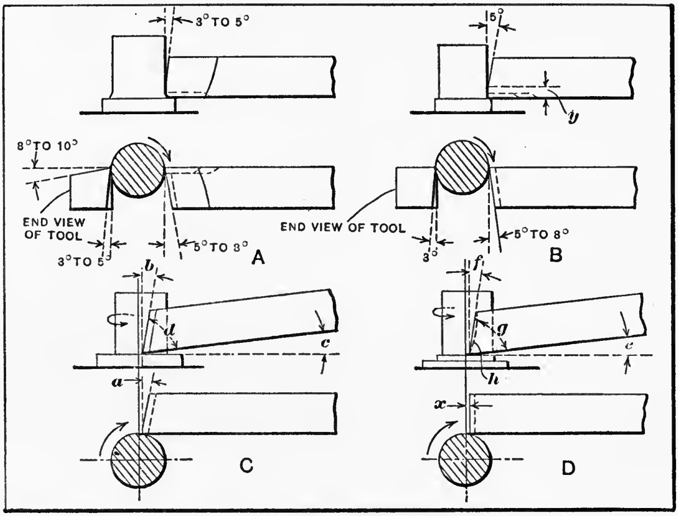

Fig. 20. Different Methods of Applying Box-tool Cutters in Automatic Screw Machine Practice

Largest diameter of work, in inches:	$\frac{1}{4}$	$\frac{3}{8}$	$\frac{1}{2}$	$\frac{3}{4}$	1
Square section of tool, in inches:	$\frac{3}{16}$	$\frac{1}{4}$	$\frac{5}{16}$	$\frac{3}{8}$	$\frac{7}{16}$

Roller Steadyrest. — A simple steadyrest of the roller-support type is shown at *A* in Fig. 10. The roller supports *a* are held in slides *b* which are adjusted by means of screws *c*. The slides are then clamped in the desired position by means of the clamp bolts *d*. This steadyrest may be used to support the end of a bar when using exceptionally wide forming tools, when knurling, or for centering the end of the stock by inserting a suitable tool in the shank.

Hollow Mills. — For roughing cuts, especially in brass, a hollow mill gives satisfactory results. A form which is commonly used in connection with automatic screw machine work is shown in Fig. 21, which includes the angles of the cutting edges for turning various materials. The hole in the center of the hollow mill should have a taper of from $\frac{1}{8}$ to $\frac{3}{16}$ inch per foot to provide clearance. The cutting edge of a mill to be used on steel should be set about one-tenth of the diameter ahead of the center, whereas, if the mill is to be used on brass, the cutting edge should be on the center-line. Hollow mills of the inserted-blade type are also used to some extent on automatic screw machines, although they are more extensively employed on screw machines of the hand type.

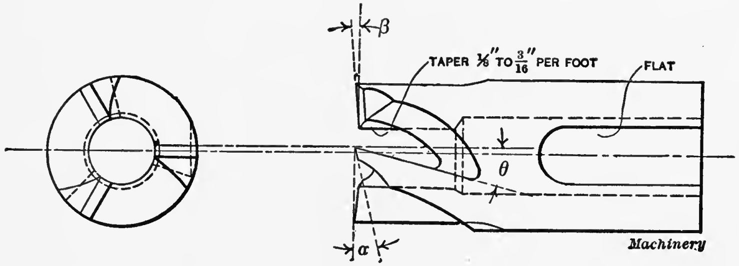

Angle as Shown by Illustration	Angles of Cutting Edges, in Degrees, for Different Materials		
	Brass Rod	Machine Steel	Tool Steel
α	8	15	10
β	8	5	3
θ	0	15	10

Fig. 21. Hollow Mill and Angles of Cutting Edges

Centering and Facing Tools. — When drilling holes which are less than $\frac{3}{16}$ inch in diameter, it is always advisable, especially when the hole passes through the work, to use a starting or centering tool. At *A* in Fig. 22 is shown a centering tool which is used for brass work, and at *B*, one which is used for steel and soft iron. This latter tool is similar to the ordinary twist drill, except that the flutes are shorter. A worn-out twist drill is sometimes used for this purpose, with the point ground thin, as shown at *a*, which reduces the pressure and allows the drill to start easier. This tool also makes a better center than would a drill with a thicker point. The included angle of the cutting edges on a centering tool should be less than the drill which is to follow. If this is not the case, the point of the drill will start to cut before the body of the drill is properly supported; consequently, an imperfect center will be formed. If an imperfect center has been formed, the drill will run out, as shown at *C*.

It is practically impossible for a drill to start concentric with the center of the work when a small teat, as shown, has been left by the centering tool, unless the latter has a more acute angle than the drill to follow, when there is no difficulty (see diagram *D*). The included angle of the point for centering tools varies from 90 to 100 degrees; 90 degrees should be used, preferably, for brass, and 100 degrees for steel. The included angle of the point of the drill varies from 118 to 120 degrees, 118 degrees being generally used.

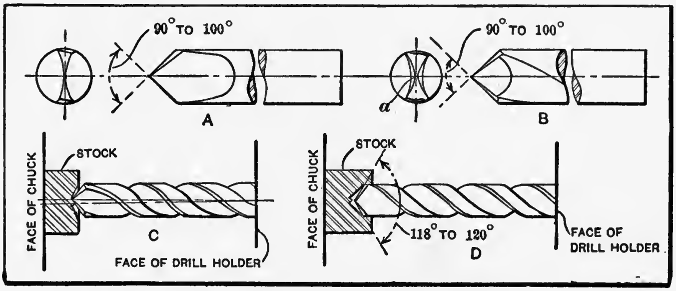

Fig. 22. Centering Tools — Starting the Drill Concentric

At *A* in Fig. 23 is shown a common form of centering-tool holder. This tool holder has been found very successful for general conditions when the work has been gaged to length by a stop, thus obviating the necessity of using a facing tool. It is provided with a split bushing *a*, or is made without the bushing, the hole for the centering tool simply passing through the body and the shank, and being of the same diameter as the centering tool. At *B* is shown a combination centering and facing tool. This tool is used when the stop for gaging the work to length has been dispensed with, the tool *b* being used for facing the work to the required length. At *C* is shown a combination centering and facing tool with a supporting bushing *c*, which is held in the body of the tool by two headless screws *d*. The centering tool is held in a split bushing by set-screw *k*. The turning or facing tool *e* is adjusted to cut the required diameter by set-screw *f* and headless screws *g*, the block *h* acting as a fulcrum. This holder is used when the work has been turned before centering, and it is also found convenient for centering long and slender work.

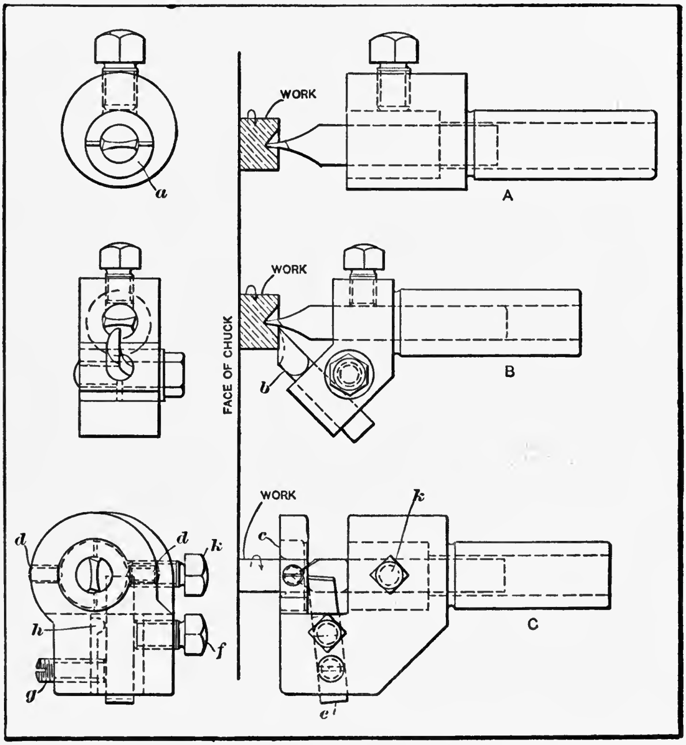

Fig. 23. Centering and Facing Tools

Drills and Drilling. — For general work, commercial drills of the two-fluted type are used exclusively on the Brown &

Sharpe automatic screw machines for drilling cylindrical holes. The spiral fluted drill is used for drilling machine steel, Norway iron, etc., and also for shallow holes in brass; but, when deep holes are to be drilled in brass, a straight-fluted drill should be used in preference to a spiral drill, as it breaks up the chips, allowing them to be removed with greater ease. The shape of the cutting edge of the drill affects the shape of the chips produced and also the amount of power required to force the drill into the work. If the included angle of the point is about 118 degrees, and if the point is ground thin, it will produce a long, curling chip, and will not require much power for drilling. When drilling, if the edges of the drill burn, it is an indication that the surface speed is too high; if the drill chips, the feed is too great; and if the drill splits at the point, that the proper clearance has not been given at the cutting edges.

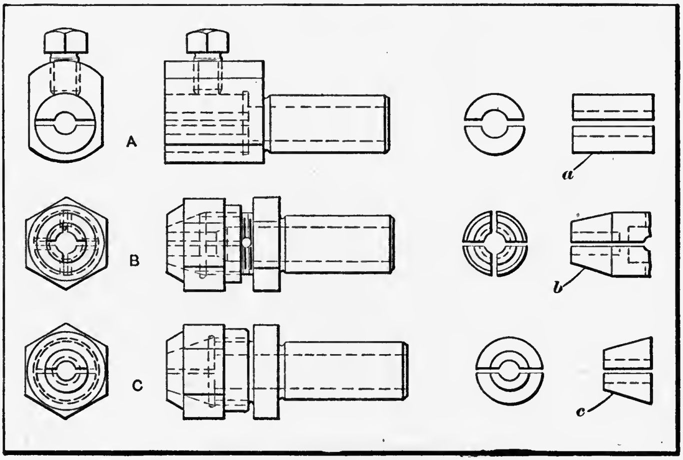

Fig. 24. Various Types of Drill-holders

For shallow holes, the best results are obtained by giving a rotary motion to the work and a feeding motion to the drill, but, when drilling deep holes, the drill and the work should both be given a rotary motion. This helps to clear the chips from the hole and also allow oil to penetrate to the cutting point of the drill. When drilling deep holes, the drill should not penetrate into the work more than 2½ times the diameter of the drill before being withdrawn. For drilling deep holes in tool and machine steel, the spiral-fluted drill is generally used with good results, but, for drilling deep holes in brass, the straight-fluted drill gives better satisfaction, as it does not produce a long, curling chip, which is generally objectionable.

Drill-holders. — There are various types of drill-holders used in the automatic screw machine. The alignment of the turret holes with the spindle is usually very accurate and it is not necessary to have a floating holder for holding a drill. At *A* in Fig. 24 is shown a common form of drill-holder. It is flattened on the sides to take up as little space as possible when working in conjunction with the cross-slide tools. A plain bushing as shown at *a* is used. At *B* is shown a more expensive holder which is sometimes used for holding reamers and counterbores for operating on a piece which has previously been drilled concentric. The bushing part of the holder is shown at *b*. At *C* is shown a holder somewhat similar to that shown at *B*, but, instead of the shank and drill-holder being in one piece, a separate bushing is used. For ordinary work, the holder shown at *A* is recommended.

High-speed Drill-holder. — A high-speed drill-holder that can be used on the larger sizes of machines for increasing the speed of small drills in the turret is shown in Fig. 25. The revolving spindle *a* is mounted in two bronze bearings with the driving gear *b* shown at *B*. The thrust is taken on the ball bearing *c* shown at *C*. The drill chuck *d* is of the spring collet type. The shank *e* is ground to fit the tool hole in the turret and the rear end of this shank is a reservoir for oil which lubricates all the bearings in the holder. Sufficient oil should be put in at the point *f* to completely fill the reservoir. For holding small reamers, the spindle *a* is especially constructed to receive a floating type of reamer-holder instead of the drill-holder shown. This holder is driven by a shaft running through the turret shaft and a small pulley belted to the overhead works.

Counterboring Tools. — Trouble is often experienced in using counterbores on automatic machines. This is probably due to the fact that counterbores are used which are not adapted for the work on which they operate. Generally speaking, there are several reasons for the unsuccessful working of counterbores, some of which may be summed up as follows: 1. Too many cutting edges, not allowing enough chip space and also not providing for sufficient lubrication. 2. Too much cutting surface in contact with the work. 3. Insufficient clearance on the periphery of the teeth. 4. Improper location of the cutting edges relative to the center. 5. Improper method of holding the counterbore. 6. Improper grinding of the cutting edges. 7. Too weak a cross-section. 8. The use of a feed and speed in excess of what the tool will stand.

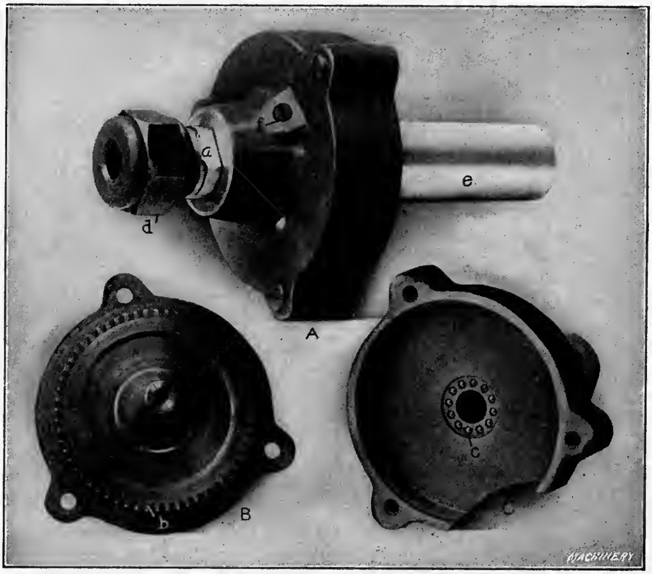

Fig. 25. High-speed Drill-holder

For work in automatic machines, where the counterbore cannot be withdrawn when it plugs up with chips and seizes in the work, the tool should not have more than three cutting teeth. The periphery of the teeth should be backed off eccentrically, and the body of the counterbore should taper towards the back. The amount of taper generally varies from 0.020 to 0.040 inch per foot. The relation of the cutting edge to the center has an important bearing on the efficiency of the tool. For deep counterboring, where the difference between the diameter of the teat and the body of the counterbore is great, the cutting edge should never be located ahead of the center; often, if it is located a little behind the center, better results are obtained; but this rule is only general, as the material to a considerable extent governs the location of the cutting edges. It is advisable to have the cutting edge ahead

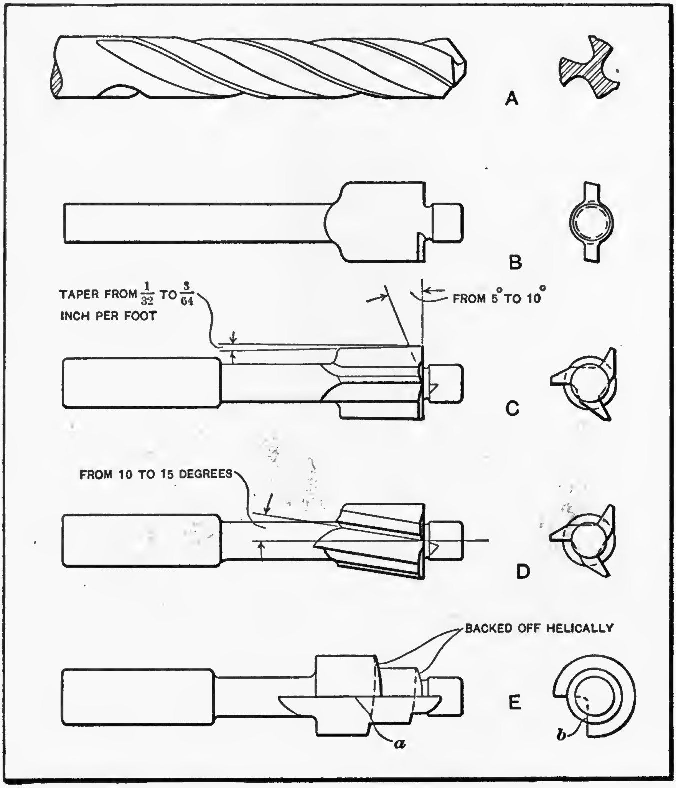

Fig. 26. Three-fluted Drill — Various Types of Counterbores

of the center, when the counterbore is to be used as a facing tool or for counterboring brass, provided it is not required to enter the work to a depth greater than its diameter.

For general work, the cutting edges should be radial. Straight flutes are suitable for either brass or steel, but for steel it is better to have the teeth cut spirally, the spiral being sufficient to give a rake of from 10 to 15 degrees. If the difference between the diameter of the pilot and the body of the counterbore is not very great, and if the counterbore must extend into the work to a depth greater than its diameter, the cutting edge should be back of the center, that is, to the rear of the radial line parallel to the cutting face. When the counterbore has to remove considerable material or enter the work to a depth greater than its diameter, it is generally advisable to rough out the hole to the diameter of the body of the counterbore with a three-fluted drill, such as shown at *A*, Fig. 26. Then the counterbore is used only for squaring up the shoulder at the bottom of the hole. This method is especially advisable when counterboring machine or tool steel.

At *B* is shown a counterbore which can sometimes be used to advantage on brass work, but which is not recommended for steel. At *C* is shown another counterbore for brass work, which has three cutting edges, and at *D* is shown a counterbore for steel work, having its teeth cut spirally. Teeth cut on a spiral which will produce a rake angle of from 10 to 15 degrees are generally found suitable for machine or tool steel. Counterbores of the type shown at *C* and *D* should have inserted leaders or teats to facilitate resharpening. At *E* is shown a counterbore which is recommended for work having complicated shapes, or requiring to have two or more diameters finished with the same tool. This tool is backed off helically as shown, thus allowing it to be ground and still retain its initial shape and size.

The counterbores described are for making pieces which permit using a pilot on the counterbore. The ordinary method used in producing holes which bottom is to use flat drills and combination counterbores and facing tools.

Flat Drills and Combination Counterbores. — At *A* in Fig. 27 is shown a flat drill which is used for roughing out a hole having one diameter, and at *B* is shown the counterbore or facing tool which is used for squaring it up. The cutting edge *a* on the tool should be set about one-tenth times the diameter ahead of the center, and the thickness of the blade *b* should be about one-eighth of the diameter. At *C* is shown a flat drill or counterbore for producing a hole having two diameters, and at *D* is shown the combination counterbore and facing tool for squaring it up. This counterbore is adjustable, the part *a* being adjusted with relation to part *b* by means of the headless screw *c*, thus governing the distance between the

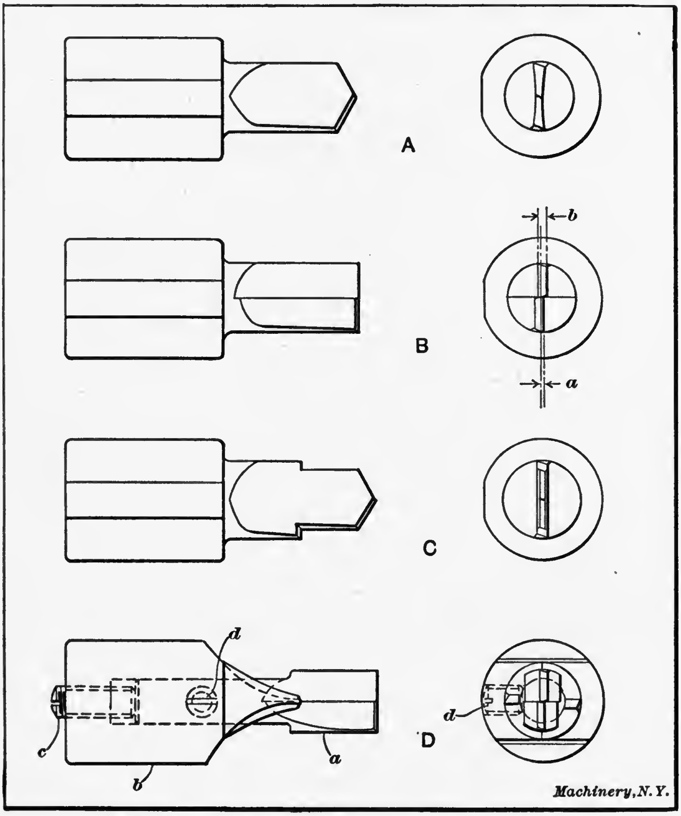

Fig. 27. Flat Drills and Combination Counterbores

shoulders, the headless screw *d* being used to prevent the part *a* from rotating. These counterbores can be used for either brass or steel work, but for steel work it is preferable to use a spiral-fluted drill for roughing out the hole, instead of a flat drill, as the material can be removed with greater ease and rapidity.

Holders for Counterbores. — For counterbores having leaders or pilots, a rigid holder should not be used, as the leader will follow the hole previously drilled or reamed, and if the counterbore is not allowed to float, it will produce poor work, and a broken tool will sometimes be the result. At *A* in Fig. 28 is shown a floating holder which will be found very serviceable. The sleeve or shank *a* is made to fit the turret and is bored out from $\frac{1}{32}$ to $\frac{1}{16}$ inch larger in diameter than the shank of the holder *b*. The holder *b* is kept from turning by the driving pin *c*, which is made a driving fit in the part *b* and a loose fit in the part *a*. The hole in the part *a* should be about $\frac{1}{32}$ inch in diameter larger than the pin *c*. The two headless screws *d* are used for adjusting the counterbore so that it will enter easily into the drilled hole. They also help to keep the holder *b* from turning. It is good practice, when

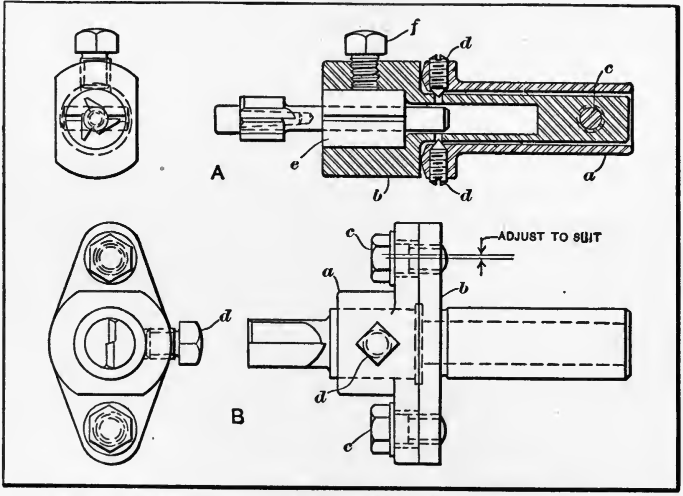

Fig. 28. Method of Holding Counterbores for Various Conditions

possible, to chamfer the hole so that the leader will enter easily. The counterbore is held by the split bushing *e* and set-screw *f*. If this holder is properly made and set it will be found to give good results for general work.

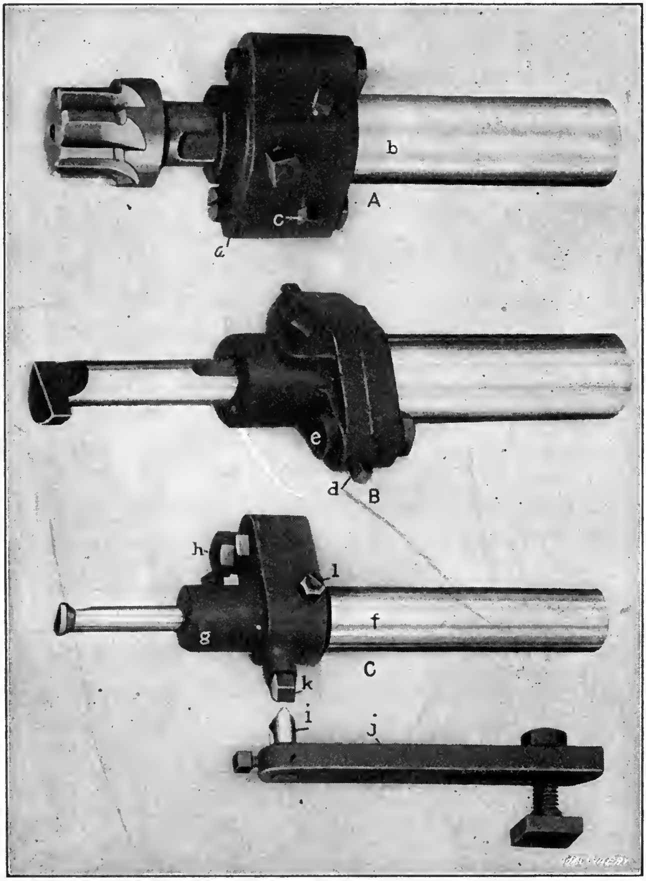

Fig. 29. Adjustable Counterboring, Boring and Recessing Toolholders

At *B* is shown a holder for holding the flat counterbore shown. The holder is made adjustable so that the tool can be set concentric with the center of the work. After adjusting, the part *a* is held tightly against the part *b* by the cap-screws *c*. The counterbore is held in the part *a* by set-screw *d*. This holder is also found very serviceable for holding a counterbore when the hole to be counterbored penetrates into the work to a distance greater than its diameter and a chucking drill has been used to rough it out.

A counterbore holder of the adjustable type is shown at *A* in Fig. 29. The front holder or plate *a* is bolted firmly to the shank *b*, and is adjusted by means of four set-screws *c*, only two of which are shown. This holder is made adjustable in order to set the cutting tool perfectly concentric with the hole in the work.

Adjustable Tool-holders for Boring and Recessing Tools. — The tool-holder shown at *B*, Fig. 29, is used for a boring tool. The front part of this tool-holder is adjustable by means of two set-screws *d*, which work through the shank of the clamping bolt *e* and in this way secure the desired adjustment to set the boring tool concentric or to the correct diameter.

The recessing tool shown at *C* has a shank *f*, to which is fulcrumed a holder *g* on a stud *h*. This tool is operated by means of a cam *i* held in an arm *j* that is clamped to the cross-slide of the machine. Cam *i* comes in contact with the pin *k* on the holder and operates it after the tool has advanced into the hole in the work. A stud in the sliding part of this holder is spring-controlled and contacts with the screw *k*, which acts as a stop for setting the cutting tool in a concentric position for entering the hole in the work.

Reamers for Screw Machine Work. — When reaming holes in automatic screw machines, it is advisable not to leave any more material to be removed by the reamer than is absolutely necessary. For general work, the following allowances will give good results for reamers ranging in diameter from $\frac{1}{8}$ to $\frac{3}{8}$ inch. For reamers over $\frac{3}{8}$ inch in diameter, a drill $\frac{1}{64}$ inch less in diameter is generally used; this would leave from 0.012 to 0.015 inch to remove, as the drill will cut slightly larger than its nominal size.

Diameter of reamer, in inches	$\frac{1}{8}$	$\frac{3}{16}$	$\frac{1}{4}$	$\frac{5}{16}$	$\frac{3}{8}$
Diameter of hole before reaming	0.120	0.182	0.242	0.302	0.368

Reamers are generally made slightly tapering towards the back; a taper varying from 0.002 to 0.005 inch per foot is generally used, and a less taper should be used for brass than steel, as brass work, especially thin tubing, contracts and expands more readily than steel, so that, if a perfect hole is desired, the reamer should be tapered but slightly. For reaming machine steel, a rose reamer is generally used, as it has been found satisfactory for producing straight and perfect holes. This reamer tapers towards the back and is not relieved on the periphery of the cutting edges, the end of the reamer only being backed off. The cutting edges of reamers are generally cut on the center (radial) for steel, but, for brass work, they are sometimes cut slightly ahead of the center, which produces a scraping action, and makes a smooth cut.

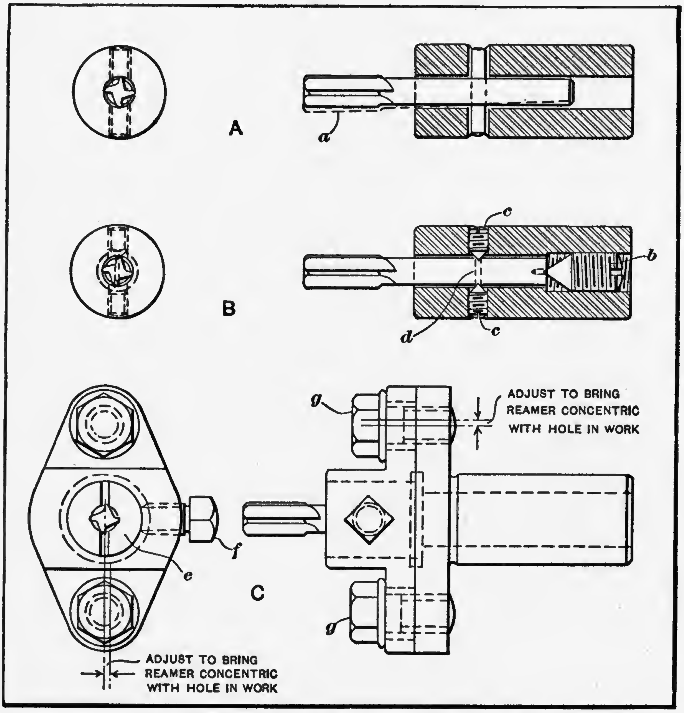

Fig. 30. Methods of Holding Reamers

For brass, the cutting edges of the reamer should be parallel with the axis, but for machine steel the reamer gives better results when the flutes are helical, making about one turn in 12 inches. For reaming tapered holes, a reamer having serrated flutes gives the best results, and, when the taper is steep (included angle greater than 30 degrees), the finishing reamer should be preceded by a stepped counterbore.

Reamer Holders. — The method of holding a reamer when applying it to the work governs to a considerable extent the quality of the hole produced. When reaming a deep hole, if the reamer is held rigidly, it will nearly always produce a hole which will be tapered and large in diameter. At *A* in Fig. 30 is shown a floating holder which is sometimes used. This holder is cheaply made, but is not recommended for automatic screw machine work, although it can sometimes be used to advantage on the hand screw machine. One of the disadvantages of this reamer holder is that the reamer drops down as shown at *a*, if much clearance is allowed between the diameter of the reamer shank and the diameter of the hole, thus preventing the reamer from entering easily into the work, which generally results in a broken reamer.

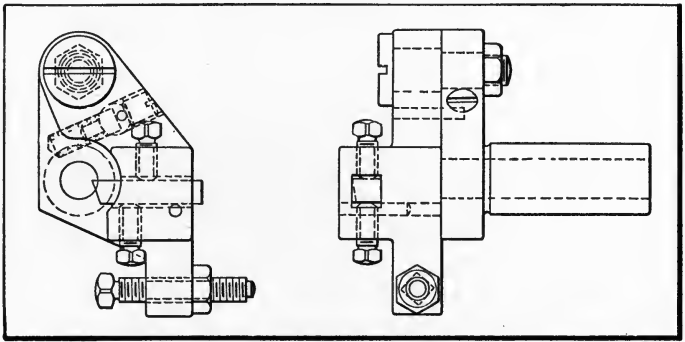

Fig. 31. Swing Tool used for External Cutting

At *B* is shown a more efficient holder, especially for deep-hole reaming. The reamer is guided at the rear by a cone-pointed screw *b*, and is kept from rotating and is guided at the same time by the two cone-pointed screws *c*. By means of these screws, the reamer can be set so that it will enter the drilled hole easily, and at the same time be allowed to adjust itself to correspond to the eccentricity of the hole in the work. The small hole *d* is drilled through the shank of the reamer, allowing the cone-pointed screws to enter. This holder will be found very satisfactory for holding reamers when it is not necessary to remove an excessive amount of material. At *C* is shown a floating holder which is used for reaming shallow holes. The reamer is held rigidly by a split bushing and set-screw *f*. The reamer is set concentric with the hole in the work by loosening the cap-screws *g* and then locating it in the hole by the bevel or rounded corners on the end of the reamer.

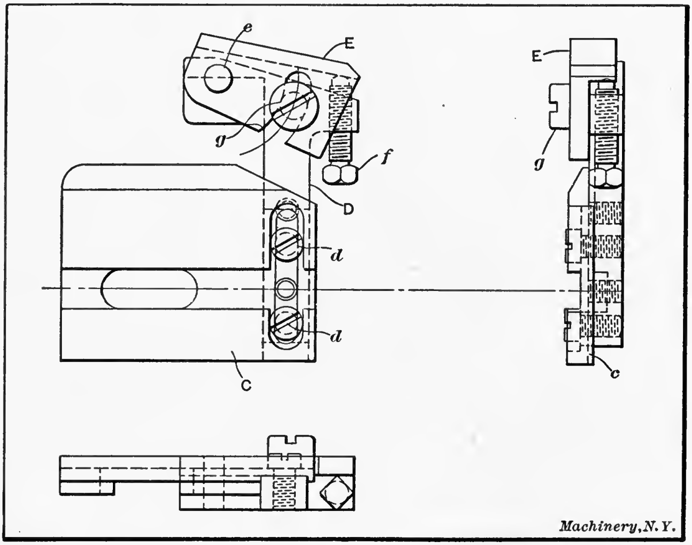

Fig. 32. Raising Block used for Operating Swing Tools on Brown & Sharpe Machines

Swing Tools for Turning. — Swing tools are so named because the cutting tool is held in a swinging holder as shown in Fig. 31, which illustrates one of the designs used on Brown & Sharpe automatic screw machines. This tool is held in the turret of the machine and the swinging member is operated by a raising block equipped with either an adjustable or fixed guide plate, which comes into contact with the screw seen at the end of the swinging arm. This raising block (Fig. 32) is held under the toolpost of the front cross-slide and it has a guide plate *E* that can be set at an angle with the spindle for generating taper surfaces. The exact shape of this plate depends upon the nature of the operation and the shape required on the work. The arm *D* which carries the guide plate can be adjusted in and out and is held in position by screws *d*. The screw *f* serves to adjust guide plate *E* which is locked in position by screw *g*.

The swing tool is used for straight, taper, or irregular turning, where box-tools or circular forming tools are not applicable, as when turning long, slender work of irregular shape or when turning behind shoulders. The work is often roughed out with this tool and finished with a shaving tool. The swing tool is also used for cutting-off finished parts when both cross-slide tools are used for forming operations. The shank is arranged to hold a back-rest for supporting small flexible work. This back-rest or support is inserted in the hole in the shank of the tool and the V-shaped supports are usually set in advance of the tool.

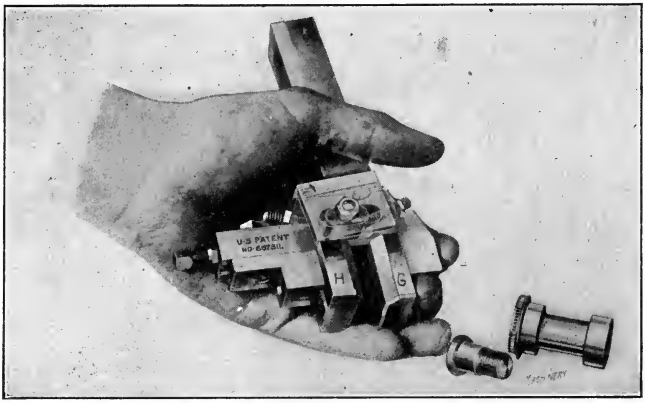

Fig. 33. Shaving Tool used on the "Acme" Multiple-spindle Automatic Screw Machine, and Examples of Work

Recessing Swing Tools. — When it is necessary to chamfer inside of a hole, or to enlarge the central part of a hole so that a bearing surface will be left at the ends only, this may be done on the automatic screw machine by the use of a swing tool. The design used on the Brown & Sharpe machine for internal chamfering and recessing is similar in principle to the one shown in Fig. 31, which is intended for external work, except that the swinging arm is arranged for holding the shank of boring or recessing tools. The guide plate which controls the movement of the swinging arm is shaped to suit the work. A recessing or chamfering operation should always precede a reaming operation, so that all burrs formed by the recessing tool will be removed by the reamer.

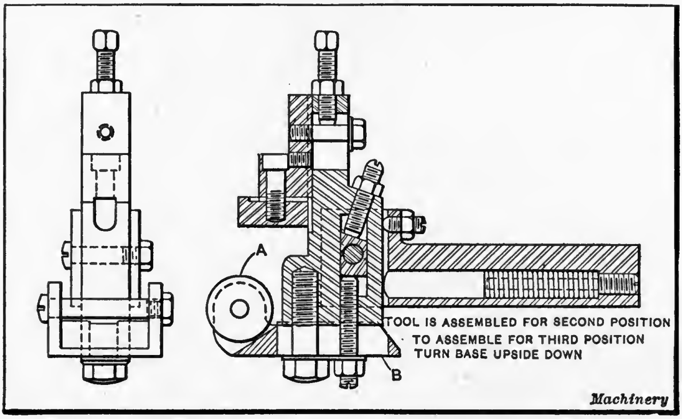

Fig. 34. Shaving Tool-holder with Roller Support

Shaving Tools for Screw Machines. — When forming work of irregular shape or contour, in the automatic screw machine, it is common practice to use a shaving tool which operates tangentially to the work and takes a light finishing cut. Shaving tools are used to follow circular forming tools for producing a smooth, accurately finished surface, and they are also used to completely form the work without any previous roughing operation. The amount removed by the shaving tool varies somewhat with the size of the work. When taking shaving cuts on small parts, from 0.003 to 0.005 inch might be removed, while for larger parts the allowance is often greater. A design of shaving tool which is used on the Acme multiple-spindle automatic is shown in Fig. 33. This tool is used in the second or third side positions and removes 0.002 or 0.003 inch of stock left by the forming tool. The blades *H* and *G* of this tool are made in pairs. One blade is used as a rest and does no cutting, whereas the other one has a cutting edge. The holder *H* is adjusted by means of a screw for locating the two parts *H* and *G* the required distance apart. The supporting blade is slightly longer than the shaving tool, so that it comes into contact with the work slightly in advance of the tool. The support and the shaving blade are not exactly parallel, the blade being inclined one-half degree to provide a slight clearance.

Another design of Acme shaving tool which has proved very effective on wide and difficult cuts is shown in Fig. 34. This tool is similar in its general construction to the design shown in Fig. 33, except that it is equipped with a roller type of support. The cutting edge of the shaving tool should be exactly in line with the axis of the supporting roller. The shaving blades and supports are made from Jessop's tool steel. For cutting brass, Jessop's high-speed steel has been found to give better results. When the support and shaving tool have an irregular form, the surfaces should be smoothly finished before the tool is hardened and then all the surfaces are lapped by the work running between them.

The tools illustrated in Figs. 33 and 34 are only recommended for taking light finishing cuts. The allowance for shaving depends to some extent upon the nature of the work and the kind of tools used prior to the shaving operation. The allowances for various diameters of stock should be about as follows:

Diameter in Inches	Amount to Remove in Inches
1/16 to 1/8	0.0015
1/8 to 1/4	0.0018
1/4 to 3/8	0.0020
3/8 to 3/4	0.0023
3/4 to 1 1/8	0.0026
1 1/8 to 1 1/2	0.0028
1 1/2 to 1 7/8	0.0030
1 7/8 to 2 1/4	0.0032

Fig. 35 shows a type of shaving tool and tool-holder which does not have a support for the work. This type of tool is employed when the work is so rigid that a support is unnecessary. When a shaving tool is not preceded by a forming tool, and if the work is long in proportion to its diameter, it is advisable to grind the end of the shaving tools so that a shearing cut will be taken in each way from the heaviest part of the cut, in order to remove the material more easily. In other words, the end of the tool is beveled each way from the part that will take the heaviest cut, so that a point is formed which first comes into contact with the work. The angles for the cutting point of the tool, as indicated by the detailed views to the right in Fig. 35, should be about as follows: For brass rods, *A* equals 20 degrees; for machine steel, 30 degrees; for tool steel, 40 degrees. For brass rods, *B* equals 30 degrees; for machine steel, 40 degrees; for tool steel, 50 degrees. For brass rods, *C* equals 10 degrees; for machine steel, 15 degrees; for tool steel, 15 degrees. Of course, these angles may vary more or less without appreciably affecting the action of the tool.

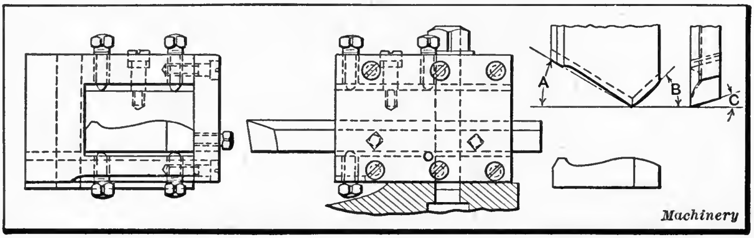

Fig. 35. Shaving Tool and Holder for Long Work

Dies for Screw Machine Work. — The common form of spring screw threading die equipped with a clamping ring for making slight diameter adjustments has been used extensively on automatic screw machines. For ordinary use, the adjustable spring dies are often recommended, because they can readily be ground and adjusted for size and are considered economical. There are two methods of making the spring screw threading dies. One is to use a hob tap which is from

0.005 to 0.015 inch larger than the standard size of the thread in order to provide clearance, and then close in the ends of the dies by the adjusting ring or clamp. A preferable method is to tap out the die from the rear with a taper hob tap, leaving the front end of the die about 0.002 inch oversize. The hob tap should have a taper varying from $\frac{3}{16}$ to $\frac{1}{4}$ inch per foot. The round split dies or "button dies," as they are commonly called, are also extensively used. While a round or button die cannot be resharpened readily like a spring die, its initial cost is considerably less, so that it can be discarded when dull. The button dies, owing to their shape, are not distorted as much as the spring screw dies when hardening, and they can be held more rigidly in the holder. The cutting edges on spring screw dies should be radial for brass and about one-tenth the diameter ahead of the center for Norway iron, machine steel, etc. The cutting edges of button dies can be ahead of the center about one-tenth of the diameter.

Holders for Threading Dies. — There are many different designs of die-holders for use on automatic screw machines. Many of these die-holders are applicable to different makes of machines, while others are designed more especially for a given type. The Brown & Sharpe Mfg. Co. makes two general styles of die- and tap-holders, which are known as the *non-releasing* type and the *releasing* type. The non-releasing type is so arranged that the die is free to move axially a limited distance. The releasing type is so designed that, when the turret stops feeding forward, a slight additional forward movement on the part of the die causes the driving members of the die-holder to disengage so that the die spins around with the work until the spindle reverses; the die then starts to rotate backwards with the spindle and work, but this backward motion is automatically stopped by the die-holder, so that, as the die is held stationary, it is unscrewed as the spindle continues to revolve.

The non-releasing type of tap- and die-holder is used on a very large percentage of the work done on Brown & Sharpe automatic screw machines; in fact, the releasing type is generally used in order to eliminate the use of a threading lobe that is too pointed. For instance, some lobes which are developed for the non-releasing type of holder have a thin sharp point, but by using the releasing type a certain amount of dwell can be allowed at the top of the lobe which is sometimes desirable simply for strengthening the lobe. The non-releasing type will enable threads to be cut to as uniform a distance from the shoulder as the releasing type.

Releasing Die-holder. — A releasing type of die-holder for button dies is shown in Fig. 36. When the die-holder or spindle *a* draws out from the body *b*, the driving pins *c* are also withdrawn, so that the ends of these pins are flush or even with the plate *m*. When the machine spindle is reversed, the spindle *a* revolves with the work and the ball *e* is thrown out of the deep part of the pocket in which it normally rests, as shown at *B*, into the position shown at *C*. This outward movement of the ball locks the die-holder, thus allowing the die to be backed off of the work as the spindle continues to revolve in a reverse direction. When the ball *e* is placed in the pocket *f*, the die-holder may be used for cut-

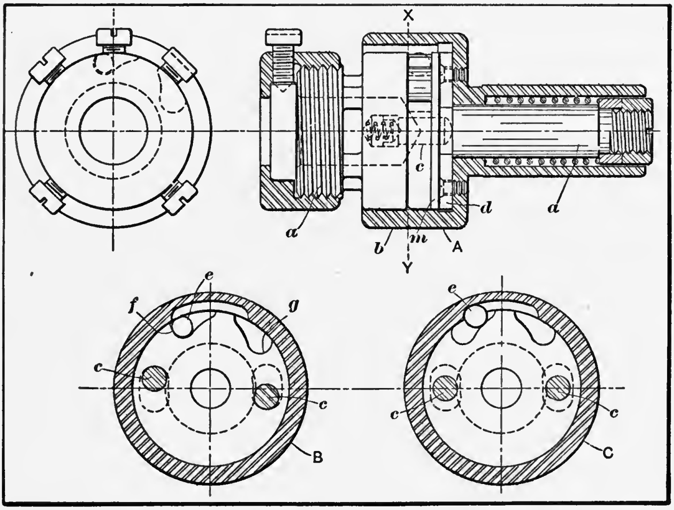

Fig. 36. Releasing Die-holder

ting a right-hand thread, whereas, when the ball is in pocket *g*, the die-holder may be used for left-hand threads.

Another design of releasing die-holder, which is a product of the Cleveland Automatic Machine Co., is shown in Fig. 37. This is known as the "Silent" die-holder because it is so designed that the driving members do not strike against each other after disengagement at the forward end of the turret travel. The holder has a sleeve which is gripped in the turret and a stem which fits inside of this sleeve. In the driving mechanism, there are two pieces *A*, of the same shape, which are held in position by screws *B*. The driving pins *E*, which come in contact with parts *A* when threading, are plain pins having heads which are somewhat larger than the body and flattened on the sides. Parts *A* and *E* are held in their correct positions by a weak, piano-wire coiled spring *I*, which is just strong enough to keep the two large members of the die-holder together. After the turret has advanced to the end of its travel, and the driving points *A* and *E* are disengaged, the small springs *G* swing parts *A*, which are pivoted on screws *B*, back so that their angular ends are nearly in a straight position, or in a plane at right angles to the axis of the holder. By this movement, the ends of driving pins *E* and parts *A* clear one another, regardless of how long the turret remains in the advanced position, thereby eliminating any pounding and damaging of the parts which carry the die or tap forward. The pieces *C* have no duty to perform when the die-holder is on the threading operation, but, when the spindle reverses,

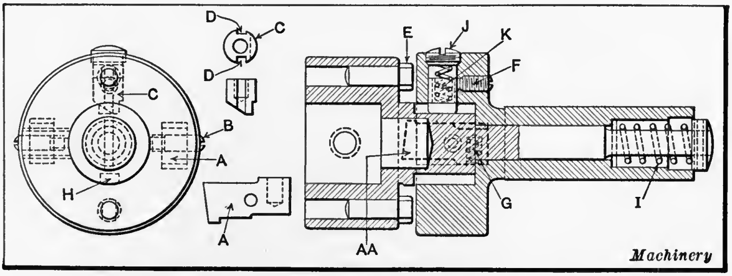

Fig. 37. Sectional View of Cleveland Releasing Die-holder

parts *C* drop into the slots *H* and hold the die-holder rigid while the turret recedes. These pieces are constantly held in their position, whether in the slots or otherwise, by springs *K*. The slots *H*, into which pieces *C* fit, are milled on a fairly large diameter, and this part of the mechanism is designed to last indefinitely.

When changing the die-holder for cutting left-hand threads, the screws *B* are removed and the parts *A* are turned over so that the straight driving side is in the opposite direction in both cases. The screws *J* and *F* are also removed so that pieces *C* can be turned around to reverse the position of the driving sides. The small screws *F* fit into slots *E* and simply hold the pieces *C* in their proper position.

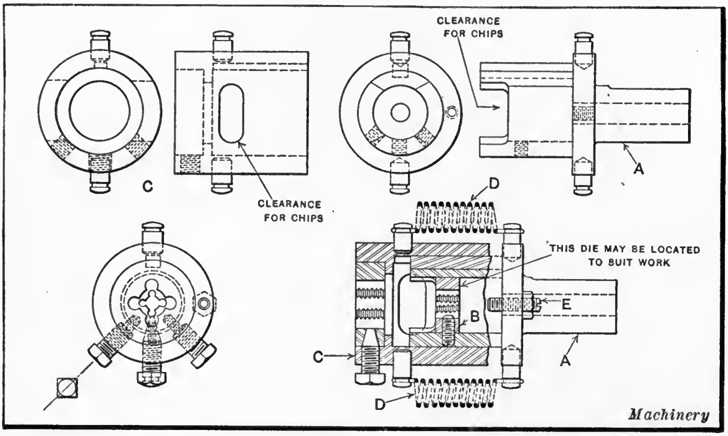

Fig. 38. Telescopic or Combination Die- and Tap-holder

Telescopic Die- and Tap-holder. — A telescopic or combination die- and tap-holder, designed for use on the "Acme automatics," is shown in Fig. 38. With this die-holder, two threading operations may be completed at the same time; that is, two dies of different diameters can be used, or a die and tap as required, the tap being held in the rear part of the holder. This special tool consists of a shank *A* in which a button die *B* is held by the cone-pointed screw shown. When a tap is to be used, the button die is replaced by a bushing for holding the tap. The front part *C* of the holder, which carries the leading button die, is a sliding fit on a key in member *A*. To enable the cutting of two threads of different pitch, the front member *C* is restrained by two coil springs *D*, which allow it to lead out in advance of the other part of the die-holder, and as the shank *A* is held in the die spindle, which also is spring-controlled as regards the leading out of the spindle, it is evident that the lead of the two members is controlled by the pitch of the thread in the dies. A stop-screw *E* is provided for locating the holder *C* in its backward position, so that the two dies will always be in the same relation to each other when starting to cut. Clearance cuts are provided in both members to facilitate the removal of chips.

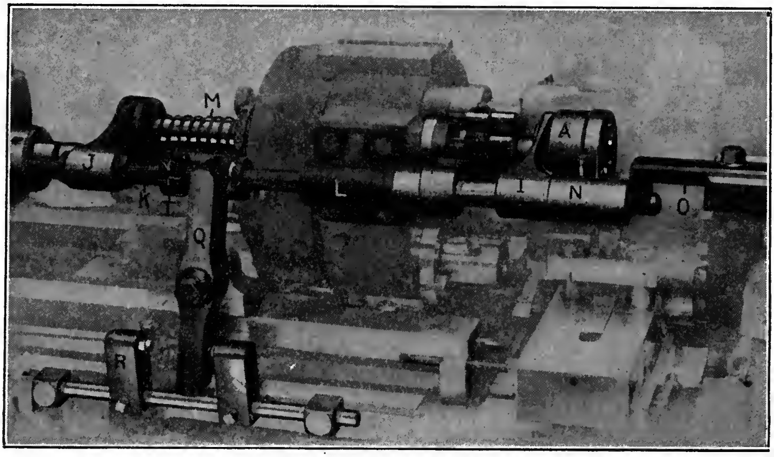

Fig. 39. Self-opening Die Attachment on Acme Machines

Self-opening Die Operating Attachment. — Fig. 39 shows a self-opening die applied to an Acme multiple-spindle automatic. This type of die is recommended for cutting long threads of accurate pitch. The working mechanism of the die-holder is enclosed within the body which carries the cam-operating blocks. The chasers have closing and adjusting cams milled on their outer ends that bear against the cam-operating blocks. The adjustment of the chasers is controlled by a fine-pitch screw, the amount of adjustment being indicated by micrometer graduations. This die is operated by an arm *I* which engages a groove in the outer body of the die-holder and shifts it axially relative to the inner member which holds the chasers, thus causing the latter to move inward or outward, according to the direction of movement. Fig. 39 shows the attachment in the position it occupies when the die is to be opened after cutting the thread. The die is rotated by the threading spindle in the usual manner. A shoe *J*, similar in shape to shoe *I*, is connected to the rear end of the threading spindle, and is held on a spindle *K* which is retained in the bracket *L* attached to the end-working tool-slide.

In operation, as the end-working tool-slide advances the chasers in the die come in contact with the work and start to cut the thread. When the pitch of the thread is greater than the forward advance of the tool-slide, the spring *M* is compressed as the threading spindle is withdrawn; this action carries forward the two arms *I* and *J* at the same speed. When the die chasers have advanced on the work to the required distance, the sleeve *N* comes into contact with adjustable stop *O* held in bracket *P*. This bracket is provided with an adjusting screw and is attached to the casing enclosing the cylinder. As the die continues to cut, the outer body *A* of the die-holder is held back by arm *I* and the chasers advance until they come out of contact with the cam-operating blocks, allowing the head to spring open; then, as the end-working tool-slide moves back, the lever *Q* strikes the rear dog *R* and pulls the chaser head back into the casing and closes the die, ready for cutting the next thread.

Taps for Automatic Screw Machines. — When tapping holes in the automatic screw machine, there is tendency for the chips to clog back of the cutting edges, thus subjecting the tap to excessive torsional strains at the moment its movement is reversed relative to the work for backing it out of the hole. In order to prevent the breaking of taps, the flutes should be relatively large in order to provide ample space for the chips, the lands being made just strong enough to resist the cutting pressure. The flutes may be milled with an 85-degree double-angle cutter having an inclination of 55 degrees on one side and 30 degrees on the other. Screw machine taps in all sizes smaller than $1\frac{1}{2}$ inch in diameter should have four flutes, and for larger diameters, six flutes. The width of the lands for different diameters should be about as follows: Diameter, $\frac{1}{4}$ inch, land width, $\frac{1}{16}$ inch; diameter, $\frac{3}{8}$ inch, land width, $\frac{3}{32}$ inch; diameter, $\frac{1}{2}$ inch, land width, $\frac{1}{8}$ inch; diameter, $\frac{3}{4}$ inch, land width, $\frac{3}{16}$ inch; diameter, 1 inch, land width, $\frac{1}{4}$ inch. Ordinarily the thread is relieved only on the top of the chamfered end. If the straight part or body of the tap is relieved, the chips are liable to wedge in between the tops of the threads on the lands of the tap and the thread in the hole, which might result in either breaking the tap, owing to the excessive torsional strain, or in damaging the thread in the hole. The chamfered end of screw machine taps is usually very short, because the tap, in most cases, is required to cut threads close to the bottom of a hole.

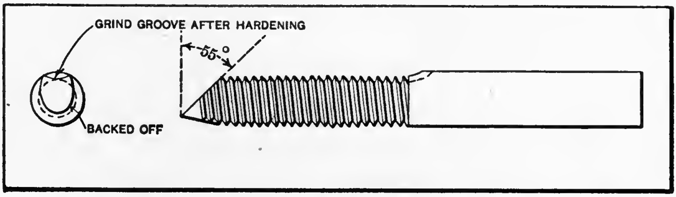

Fig. 40. A Tap Suitable for Norway Iron and Machine Steel

The amount of chamfer required on taps for various pitches is as follows:

From 14 to 24 threads	$2\frac{1}{2}$ threads.
From 26 to 32 threads	3 threads.
From 36 to 48 threads	4 threads.
From 56 to 80 threads	5 threads.

In regard to the diameter of the shank, manufacturers making a specialty of these taps recommend that the shank diameter be made to correspond with the outside diameter of a spring screw die for cutting the same size of thread as the tap is intended for, so that the same holder may be used for both the tap and the die. If a tap is to be used for cutting triple or quadruple threads, the flutes should be helical so that they will be at right angles to the teeth and form square cutting edges.

While an ordinary machine tap may be used for tapping brass in the screw machine, it does not give satisfactory results when tapping such material as Norway iron, machine steel, etc. The tap shown in Fig. 40 has proved satisfactory for materials of the kind mentioned. The end of this tap is ground at an angle of about 55 degrees and is slightly cupped out at the center and backed off as indicated in the end view. The tap should be slightly tapered towards the back for clearance. A groove is ground the entire length of the threaded part after the tap has been hardened. This groove allows the oil to reach the point of the tap and also provides clearance for the chips. When made from Stubb's imported drill rod and carefully hardened, this tap can be worked at a cutting speed of from 35 to 40 feet per minute.

Some taps intended especially for threading copper have an odd number of flutes which are cut spirally. The Echols patent tap, made by the Pratt & Whitney Co., has proved effective for cutting clean threads in copper and tough materials, such as gun-metal, etc. This style of tap has an odd number of flutes and each alternate tooth is omitted, the arrangement being such that each tooth is followed by a blank space on the following land, which, in turn, is followed by a tooth on the next successive land.

Knurling Tools. — The tools used for knurling the edges of screw-heads, etc., in automatic screw machines, are held either on the cross-slide or in the turret, their position depending upon the location of the surface to be knurled or the arrangement of the other tool equipment. There are three general methods of presenting knurls to the work. When the knurling tool is attached to the cross-slide, it may be forced against the work either radially or tangentially and, when the knurling tool is held in the turret, two knurls move along the surface of the work on opposite sides and parallel with its axis.

A cross-slide type of knurl-holder is shown in Fig. 41. The knurl operates on the top side of the work as the cross-slide moves laterally; as this movement is continued, the circular cutting-off tool back of the knurl severs the finished part, and then the cross-slide and knurl return to the starting position. The knurl-holder is held to the outer face *A* of the rear cross-slide tool-holder, by means of screw *B*, which also holds the circular cutting-off tool. The distance *C* from the knurl to the cutting-off tool may be changed in accordance with the location of the knurled surface relative to the end of the work. This design of knurl-holder can only be used on a tool-holder which carries the cutting-off tool, because the finished piece must be severed from the bar before the knurl can return to the starting position.

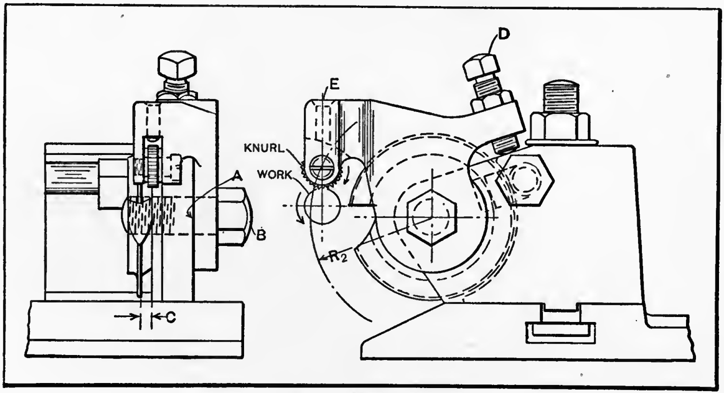

Fig. 41. Rear Cross-slide Knurl-holder

Universal Cross-slide Knurling Tool. — Another design of cross-slide knurling tool is shown in Fig. 42. This design is more complicated and expensive than the one previously described, but it can be applied to a wider range of work and may be used in conjunction with either circular forming or cutting-off tools on the front cross-slide. The knurl is held in arm *F*, which is pivoted to lever *C*, and this lever is mounted on a pin upon which it has a certain amount of adjustment for locating the knurl relative to the work in a lengthwise direction. The nuts *M* on the stud shown serve to hold arm *C* and also provide adjustment for raising or lowering arm *F* in accordance with the diameter of the part to be knurled. As the knurl passes over the stock on the outward movement of the cross-slide, the nuts *H* bear against the face *B* of the lug shown, and spring *K* is compressed; when the knurl has cleared the work and the pressure on the spring is released, nut *J* is forced against the opposite side of the lug and arm *F* swings outward, so that the knurl clears the work on the return movement.

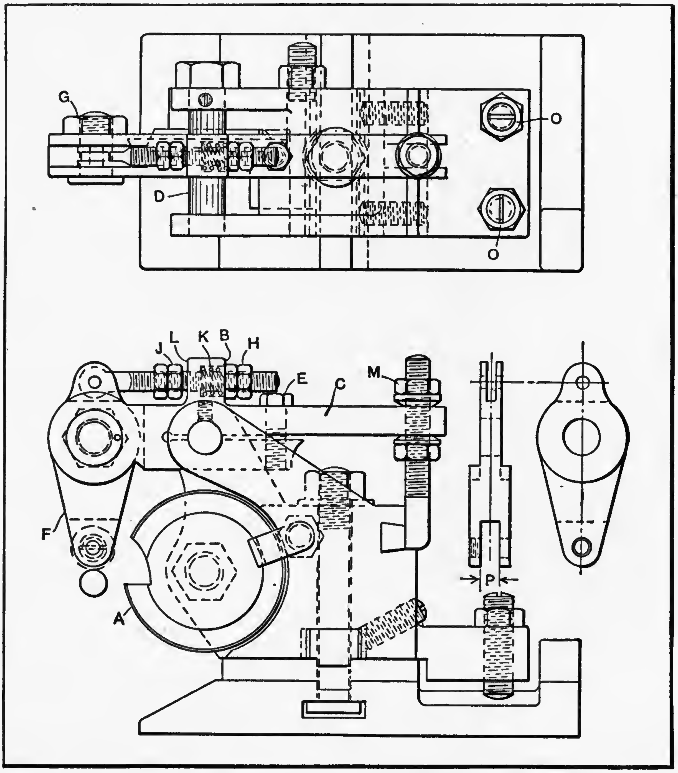

Fig. 42. Universal Cross-slide Knurl-holder

Turret Knurling Tools. — Knurling tools which are held in the turret and move parallel with the work usually have two knurls which engage the work on opposite sides. The design that is used on the Brown & Sharpe machines is shown in Fig. 43. The knurls have teeth which are parallel to the axis so that they may by used for either straight or cross-knurling. Each knurl-holder *A* may be set to the different angular position required, by means of the graduations on the lugs *B* in which the knurl-holders are inserted. These lugs are clamped by nuts *C* and are adjustable in the main holder *F* for varying the distance between the knurls, in accordance with the diameter of the surface to be knurled. This adjustment is effected by screws *D* which are locked by screws *E*.

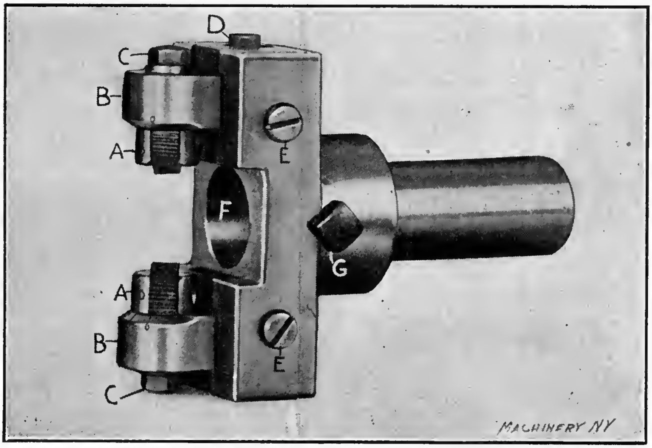

Fig. 43. Brown & Sharpe Adjustable Turret Knurl-holder

Opening and Closing Type of Knurl-holder. — It is sometimes necessary to use a turret tool for knurling a diameter which is either of the same size or smaller than a preceding part of the work. For knurling operations of this kind, a special knurl-holder is required which is so designed that the knurls will move inward to the working position at a predetermined point and then open automatically after the required length has been knurled.

Double Knurl-holder for Cross-slides. — The double adjustable knurl-holder shown in Fig. 44 was designed primarily for use on the Acme multiple-spindle machines. It is usually held on a top working tool-slide. The shank *A* is slotted at the end to receive a swinging member *B* which is pivoted on screw *C*. The lower knurl is retained in holder *B* and the upper knurl in an adjustable holder *D*, which is held in position by cap-screw *E* which is backed up by screw *F*. The movement of part *B* is controlled by the stop-screw *G* against which the holder is held by a bevel pin *H* and coil spring *I*. This construction gives a certain amount of flexibility, thus making it unnecessary to set the holder accurately relative to the work, as it is self-adjusting.

The Teeth of Knurls. — The teeth of knurls may be either straight or parallel with the axis, or they may be at an angle with the axis. Knurls having straight teeth are presented to the work so that these teeth are parallel with the axis of the work when straight knurling, similar to the milled edge of a coin, is desired. By applying two knurls of this type to opposite sides of the work and inclining them to the axis of the work, a cross or diamond knurling is obtained. A similar form of knurling may also be obtained by using a pair of knurls which have right- and left-hand helical teeth and mounting the knurls in their holders so that their axes are parallel with the axis of the work. Knurls also differ in regard to their form, some being cylindrical for operating upon plain cylin-

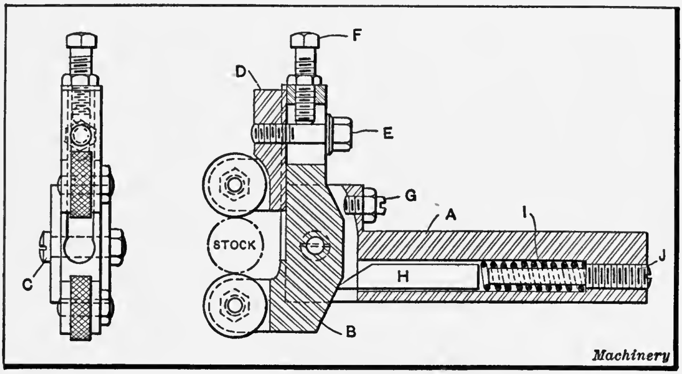

Fig. 44. Double Knurl-holder of the Adjustable Type for Use on Top- or Side-working Tool-slides

drical surfaces, whereas others are made concave to conform to the convex head of a screw or other part that requires knurling.

Straight Knurls. — Straight knurls or those having teeth which are parallel with the axis are generally cut in the milling machine by the use of a cutter of the desired angle. It is important to select a suitable angle for the teeth for knurling different materials. A "blunt knurl" will work better on soft materials than one with teeth of a more acute angle. The following included angles for the teeth have been found satisfactory for the materials specified:

Brass and hard copper	90 degrees.
Gun screw iron	80 degrees.
Norway iron and machine steel	70 degrees.
Drill rod and tool steel	60 degrees.

When laying out a set of cams for knurling operations, it is necessary to know the depth of the tooth in the knurl. If d = depth of tooth in knurl; p = circular pitch of knurl; a = included tooth angle of knurl; then, for all practical purposes, the depth may be calculated as follows: When,

$$a = 90 \text{ degrees}, \; d = \frac{p}{2},$$

$$a = 80 \text{ degrees}, \; d = \frac{p}{2} \times \tan 50 \text{ degrees},$$

$$a = 70 \text{ degrees}, \; d = \frac{p}{2} \times \tan 55 \text{ degrees},$$

$$a = 60 \text{ degrees}, \; d = \frac{p}{2} \times \tan 60 \text{ degrees}.$$

Concave Knurls. — The radius of a concave knurl should not be the same as the radius of the piece to be knurled. If the knurl and the work are the same radius, the material compressed by the knurl will be forced down on the shoulder *D* and spoil the appearance of the work. A design of concave knurl is shown in Fig. 45, and all the important dimensions are designated by letters. To find these dimensions, the pitch of the knurl required must be known, and also, approximately, the throat diameter B. This diameter must suit the knurl-holder used, and be such that the circumference contains an even number of teeth with the required pitch. When these dimensions have been decided upon, all the other unknown factors can be found by the following formula: Let R = radius of piece to be knurled; r = radius of concave part of knurl; C = radius of cutter or hob for cutting the teeth in the knurl; B = diameter over concave part of knurl (throat diameter); A = outside diameter of knurl; d = depth of tooth in knurl; P = pitch of knurl (number of teeth per inch circumference); p = circular pitch of knurl; then, $r = R + \frac{1}{2}d$; $C = r + d$; $A = B + 2r - (3d + 0.010 \text{ inch})$.

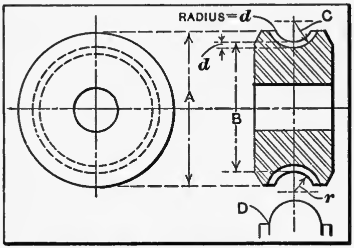

Fig. 45. Concave Knurl

As the depth of the tooth is usually very slight, the throat diameter B will be accurate enough for all practical purposes for calculating the pitch, and it is not necessary to take into consideration the pitch circle. For example, assume that the pitch of a knurl is 32, that the throat diameter B is 0.5561 inch, that the radius R of the piece to be knurled is $\frac{1}{16}$ inch, and that the angle of the teeth is 90 degrees; find the dimensions of the knurl. Using the notation given:

$$p = \frac{1}{P} = \frac{1}{32} = 0.03125 \text{ inch};$$

$$d = 0.0156 \text{ inch};$$

$$r = \frac{1}{16} + \frac{0.0156}{2} = 0.0703 \text{ inch};$$

$$C = 0.0703 + 0.0156 = 0.0859 \text{ inch};$$

$$A = 0.5561 + 0.1406 - (0.0468 + 0.010) = 0.6399 \text{ inch}.$$

Spiral Knurls. — When a knurl has spiral or helical teeth, the number of teeth around the circumference may be determined as follows: Divide the normal pitch of the teeth or the shortest distance between adjacent rows of teeth by the cosine of the angle between the teeth and axis of the knurl, thus obtaining the pitch of the teeth as measured circumferentially; the circumference of the knurl is then divided by this circumferential pitch to obtain the number of teeth in the knurl. To illustrate, if the normal circular pitch is 0.0455 inch, and if the angle between the teeth and the axis of the knurl equals 30 degrees, the circumferential pitch will equal $0.0455 \div \cos 30$ degrees $= 0.0525$. The circumference divided by 0.0525 inch will equal the number of teeth around the circumference of the knurl.

To find the lead of the helix or spiral, multiply the circumference of the knurl by the cotangent of the angle between the axis of the knurl and the teeth. If the circumference equals 2.362 inches, and the circular pitch is 0.0525 inch, the number of teeth equals $2.362 \div 0.0525 = 45$ teeth. If the angle between the teeth and the axis of the knurl is 30 degrees, the lead of the tooth groove or spiral equals $2.362 \times \cot 30$ degrees $= 4.09$ inches, which represents the lead for which the milling machine would be geared when cutting the knurl teeth.

CHAPTER V

ADJUSTING OR SETTING-UP AUTOMATIC SCREW MACHINES

THE automatic screw machine, like automatic machine tools in general, requires first a set of cutting tools that is suitable for the particular work to be produced and, in addition, a certain amount of adjustment, so that the movements of the different tools will occur in the required order or sequence. As the tool movements are ordinarily controlled by cams, setting-up or adjusting a screw machine involves setting the cams as well as the tools and whatever additional parts of the machine must operate in accordance with the nature of the work. On some automatic screw machines, the cams are previously laid out and milled to the exact contour or shape necessary for moving the tools the required amount and at a suitable rate of feed; these cams, which are special for each job, are then placed on the machine in such positions that the tools which they control act at the right time, as determined by the successive order of the operations. Other types of screw machines are so designed that special cams for each job are not needed, because the machine can be adjusted for varying the feeding movements and the time at which the different tools operate. The following general information on screw machine adjustment applies to several well-known designs and indicates what changes are necessary for adapting these machines to the production of different parts.

Setting-up the Brown & Sharpe Machine. — The cams which control the movements of the Brown & Sharpe machine are made special for each job, and the laying out of these cams is often referred to as "camming the machine." The outline of each cam is plotted on paper in advance, and this work can be facilitated by the application of a cam templet for laying out the rise and drop on the cam lobes for various speeds. In connection with this work, it is necessary to consider the speed at which the spindle is to be operated; the best method of producing the piece; and the feeds for the various operations. In order to avoid confusion, the actual methods of designing cams have been treated separately in Chapter VII.

After the machine is equipped with the proper cams for operating the turret-slide and the cross-slides, setting-up the machine is a comparatively simple operation. The selection of the right feeds and speeds for the work is done in advance in connection with the laying out of the cams. In addition to making the adjustments common to hand-operated machines, it is simply necessary to put on the three cams which control the movements of the two cross-slides and the turret-slide, respectively, select the specified change-gears, and set the adjustable dogs which control the time of indexing, feeding of stock, etc., to trip at the proper time. The cams are definitely located by pins. If the record of speeds, change-gears used, and name of the part for which the cams were designed, are stamped upon the side of one of the cams, it is an easy matter to duplicate the work for which the cams were designed, at any future time, by simply equipping the machine with the same cams and gears previously used.

When arranging and adjusting the tools, the most simple tools should, generally, be set first. As a rule, these are the circular form and cut-off tools which are held on the cross-slides. Before any of the tools are set, however, the collet and feed finger should be changed for the size of work required, the proper change-gears put on, and the driving belt placed on the required step. After the feed finger and spring collet have been put in place, the stock is inserted and pushed out far enough so that it can be faced off with the circular cut-off tool.

Setting Circular Form and Cut-off Tools. — The cut-off tool is then clamped to the toolpost and set with its cutting edge as close as possible to the height of the center of the work. The spindle is rotated and the end of the stock faced off, using lever K_2, Fig. 1, to operate the cross-side. The illustration shows an operator setting the cutting edge of a circular form tool to the height of the center of the work by means of the adjusting nut L_3. Care should be taken in setting the circular form and cut-off tools, so that they will form the work parallel and cut it off with a square face. This is accomplished by means of the adjusting screws a in the rear of the toolpost, which can be adjusted when nut K_3 is slackened slightly.

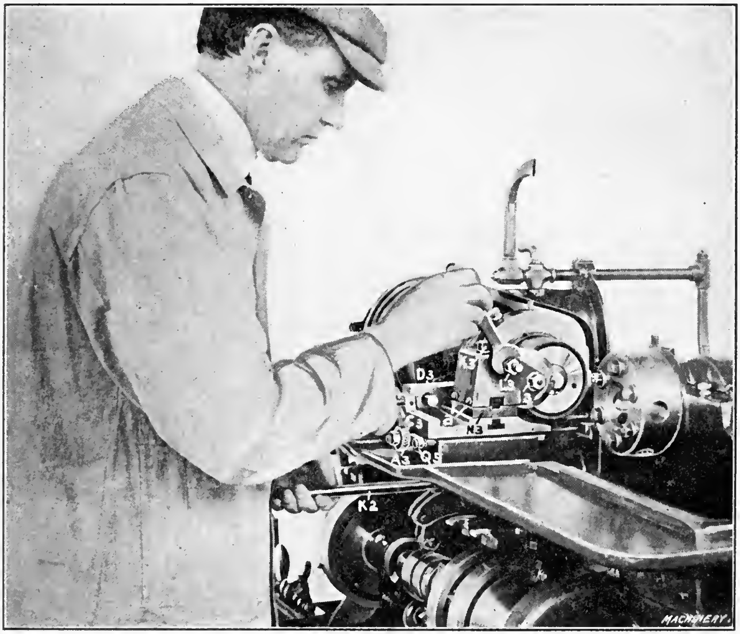

Fig. 1. Operator setting a Circular Form Tool

In setting the tool on the front cross-slide, the cutting edge should never be below the center of the work, but should be set preferably above or at the height of the center. The cutting edge of the tool on the rear cross-slide should be set just the reverse in reference to the center of the work, when the latter is running forward. When the work is running backward, the position of the cutting edges of the tools on the front and rear cross-slide should be reversed from that for the forward rotation of the work. If the cutting edges of the circular tools are not set in the positions described, the work, when rotating, has a tendency to pull them around, thus increasing the diameter of the work, and causing chattering.

When the circular form tool is used for finishing the work to an exact diameter, the set-screw C_3 should always be set so that it will come in contact with the stop D_3, when the work is turned to the desired diameter. In setting this stop, it should be so adjusted that it will put a slight strain on the cross-slide operating lever. The resulting action keeps the roll in close contact with the cam, and thus assures the parts formed being of the same diameter. When the circular form tool wears slightly, the set-screw C_3 can be adjusted back a slight amount, and the strain which has been set up in the lever will allow the tool to turn the work to the desired diameter. The cross-slide is adjusted back and forth to bring the cross-slide tools in contact with the work by means of split nut D_3, which is locked by means of a screw. Gib Q_5 should be adjusted so that there will be no unnecessary side play of the cross-slide in the bed.

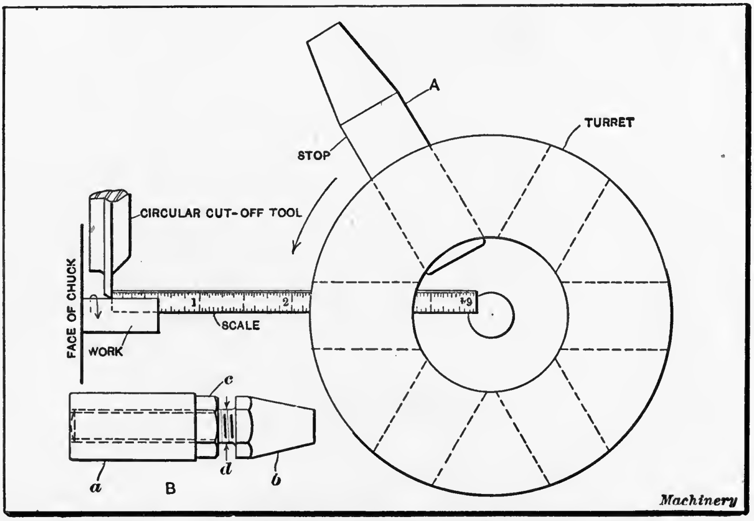

Fig. 2. Simple Method for Setting a Stock Stop

Setting the Stop. — When the circular cut-off tool has been set correctly, the chuck is opened by lifting the tripping lever, and the stock is fed out the desired length by hand; this length can be easily measured off by the method shown in Fig. 2. A flexible scale, the length of which depends upon the size of the machine, is placed in an empty hole in the turret and brought up against the inside face of the circular cut-off tool. The cut-off tool is now brought up against the work by means of the handle operating the cross-slide. It is then an easy matter to set the stock to the desired length. When this has been done, the chuck is closed and the turret swung around so that the stop comes in line with the stock. When the stop is in this position, the roll should be on the quick rise of the lead cam so that, by rotating the cam, the roll will rise up onto the lobe, thus forcing the stop back into the turret the required amount, where it can be locked with the lock-screw provided for that purpose.

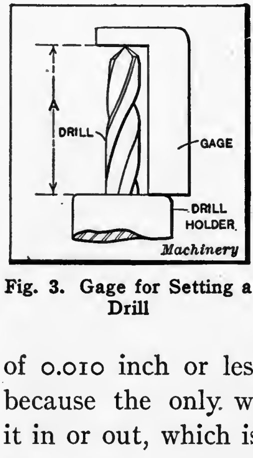

Fig. 3. Gage for Setting a Drill

When it is necessary to have the length of the piece to within a limit of 0.010 inch or less, the stop *A* gives considerable trouble, because the only way in which it can be set is by tapping it in or out, which is a rather difficult matter. A stop which gives better results is shown at *B*. The parts *a*, *b*, and *c* are made from machine steel and casehardened. The body *a* is drilled and tapped for a screw the diameter of which is made in accordance with the size of the machine in which the stop is to be used: For the No. 00, $d = \frac{5}{16}$ inch; for the No. 0, $d = \frac{3}{8}$ inch; and for the No. 2, $d = \frac{1}{2}$ inch.

For the No. 00 machine, the number of threads per inch of the screw should be thirty-two, which means that one revolution would give an adjustment of 0.031 inch. For the other machines, the screw should have twenty threads per inch. The stop proper, *b*, is made of hexagonal stock to fit the standard wrenches supplied with the machines. The nut *c* is made of the same shape and from the same size of stock as *b*. By having the stop hexagonal, as shown, it is an easy matter to set it within 0.005 inch, by means of the faces on stop *b*, as the relation of these faces to the nut can be noted, provided the latter is held with a wrench while part *b* is rotated.

Setting a Hollow Mill or Box-tool. — In setting a box-tool, the bar should project out of the spring collet only far enough for the machining operation, as otherwise the work will not be held rigidly, and will spring away from the cutting tool. The cutting tool is first set to turn the work to within about 0.0005 or 0.001 inch of the finished diameter; then the supports are forced up tightly into contact with the work and clamped. It will be found that, when the stock is fed out to the desired length, the supports bearing against the work tightly, the tool turns it slightly smaller in diameter. The box-tool cutter is brought in contact with the work by means of the handle K_2, Fig. 1, on the No. 00 machine, and by the lever R_5 on the Nos. 0 and 2 machines, as shown in Fig. 7. These

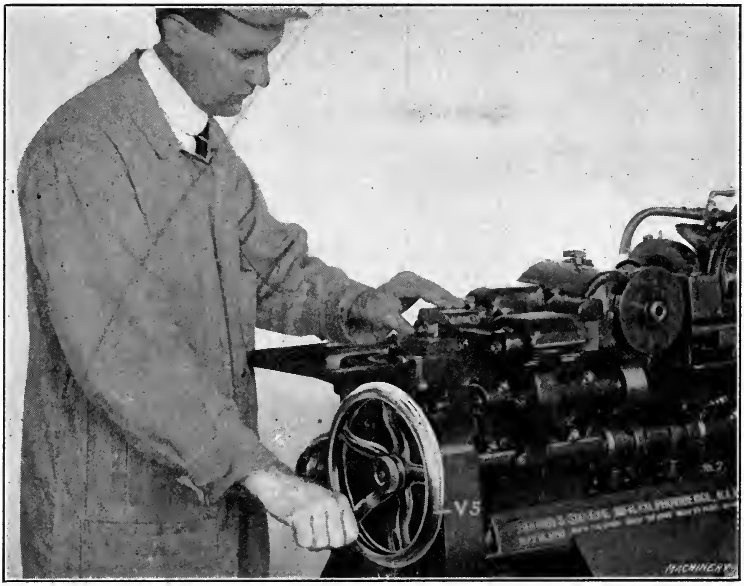

Fig. 4. Method of Operating Machine by Hand when Making Adjustments

levers should always be removed before engaging the driving clutch.

Setting Centering Tools and Drills. — When the drill used is less than $\frac{1}{8}$ inch in diameter, and is to pass entirely through the work, a centering or spotting drill should always be used. The centering tool should be ground and set so that it will not leave a teat in the work. It should also have an included angle less than that used on the drill. To set the centering tool, the holder carrying the tool is placed in the turret, the latter swung down, the spindle stopped, and the centering tool brought in contact with the work. The lead cam is then rotated by handwheel V_5, Fig. 4, until the roll rises up on to the starting point of the lobe for feeding the centering tool into the work. The holder is tapped back into the turret, so that the point of the tool just clears the end of the work; then the holder is clamped in the turret. If, upon trial, it is found that the centering tool does not project in to the required distance, it is a simple matter to bring it out. The procedure given for setting the centering tool also applies to setting a drill.

It is advisable to have a number of ground drills on hand, and to use a gage for setting the drills, as shown in Fig. 3. This gage is made from sheet steel about $\frac{1}{16}$ inch thick. The dimension A is made equal to the distance that the drill is required to extend out of the holder. If there is more than one drill in the turret, which would be necessary when a deep hole is to be produced, a gage of this kind should be made for setting each drill. These gages should be marked according to the position that the drill for which they are used takes in relation to the other drills; that is, "1st," "2nd," etc., and kept in the same box as the other tools used on the job. If this precaution is taken, no time will be lost in setting a drill, because the machine need not be stopped.

Setting Counterbores and Reamers. — A counterbore provided with a leader should always be held in a floating holder. Before setting the counterbore, the hole should be drilled; then the procedure for setting centering tools should be followed, except that the leader is inserted, bringing the face of the counterbore in contact with the end of the work. Reamers which are to produce deep holes should be held in floating holders.

Setting Dies and Taps. — Before a die or tap and its holder are placed in the turret, the dogs should be set in position to reverse the spindle in the correct relation to the threading lobe on the lead cam. The two parts of clutch *M* (see Fig. 1, Chapter II) should first be engaged, so that the shaft carrying the disk on which the dogs are located will be rotated in step with the other driving mechanism of the machine. Then the shifter is pulled over and the main spindle started. The lead cam is now rotated by means of handwheel V_5, Fig. 4, the operator also pressing his thumb against the turret-slide and bearing on the turret base. While rotating the handwheel V_5, notice when the spindle reverses; and by keeping the thumb in contact with the turret-slide one can tell when the roll drops over the highest point of the lobe on the cam. When the spindle reverses at the same instant that the roll drops

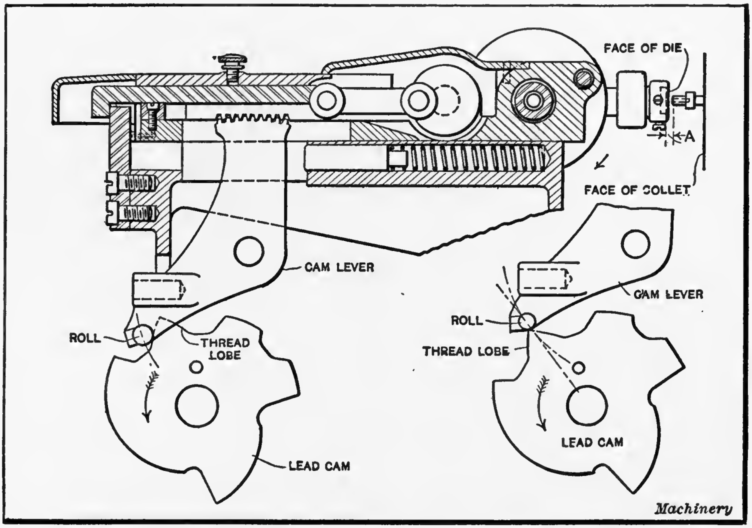

Fig. 5. Turret-slide Operating Mechanism on Brown & Sharpe Machine

over the highest point of the lobe on the cam, the dog is set in the desired position. This is illustrated graphically, for setting a die, in Fig. 5. A button die, held in a holder, is shown in position ready to start on the work. The face of the die should be set the distance *A* from the end of the work. This distance varies from $\frac{1}{16}$ to $\frac{3}{16}$ inch, depending upon the pitch of the thread and the length of the threaded portion. The detail view to the right shows the cam roll set just back of the highest point of the lobe; when the roll is at this point, the spindle should reverse.

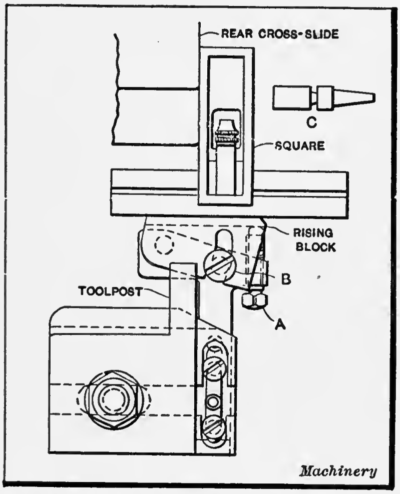

Fig. 6. Use of a Square for Setting Raising Block

After the first setting, if it is found that the die does not travel onto the work far enough, the holder is brought further out of the turret. The same procedure is followed in setting a tap, except that it should be set more carefully, only going into the work a slight distance when starting, and the holder moved out of the turret until the desired depth is reached. It is sometimes found necessary, after setting the tripping dogs, to adjust them slightly, especially when using the drawout type of die or tap-holder. The turret should not be indexed until the die or tap is clear of the work.

Setting Swing Tools and Taper-turning Tools. — Swing tools are used for both internal and external cutting, and are operated under three different conditions: 1. The cutting tool is fed into the work from the cross-slide alone. 2. The cutting tool is fed longitudinally by the turret. 3. The cutting tool is fed inward by the cross-slide and longitudinally by the turret. For the first condition, the raising block need not be set in any particular relation to the axis of the spindle. When straight turning is to be produced under the second condition, the face of the raising block should be set parallel with the axis of the spindle. For the third condition, when the work is to be turned taper, the face of the raising block should be set at an angle with the axis of the spindle.

In Fig. 6 is shown a simple method of setting the face of the raising block parallel with the axis of the spindle. An ordinary adjustable square is held against the face of the rear cross-slide, and screw *A* is adjusted until the block is set correctly, after which screw *B* is tightened. This method can be used when it is not necessary to have the raising block set exactly parallel with the axis of the spindle.

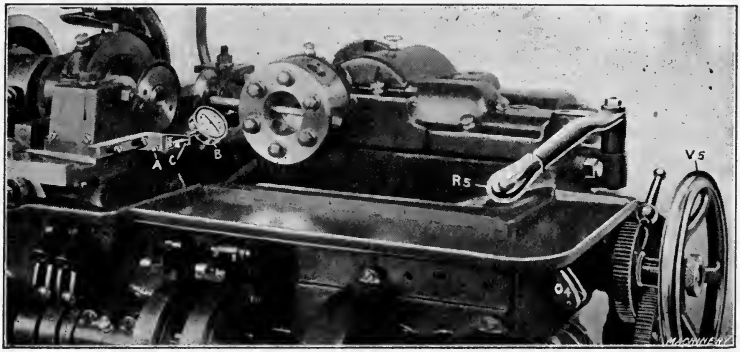

Fig. 7. Testing Position of Raising Block by means of Dial Indicator

A better and more accurate method is shown in Fig. 7. Here a dial test indicator *B* is used. A split bushing is inserted in one of the holes in the turret, and a bent rod with the indicator is held in it. The finger of the indicator is brought to bear against the face of the raising block *C*, and the turret is traversed by handle R_5 on the Nos. 0 and 2 machines, and by using handle K_2, Fig. 1, on the No. 00 machine, inserting it in the turret traversing lever. While the turret is being traversed back and forth, the movement of the needle on the dial is noted, and the screw *A* adjusted until no movement is transmitted to the needle.

The setting of the raising block for operating a taper turning tool or a swing tool for taper turning is generally done by the cut-and-try method, the first time the tools are set up. Most operators, when setting up a job for the second time, use what is called a "set piece" to set the tools by. This is a piece of work which has been made correctly to size, but which is not entirely cut off, as shown at *C* in Fig. 6. It is gripped in the collet, and the turning tool as well as the circular form and cut-off tools are set to it.

General Method of Setting-up Screw Machine. — To illustrate the method followed in setting-up a Brown & Sharpe automatic screw machine, let it be assumed that a set of cams as illustrated in Fig. 8 have been designed and made for producing a button-head screw on the No. 00 machine. These cams, together with the special and standard tools which are numbered, are turned over to the operator. He also receives a drawing similar to that shown in Fig. 8. Assume that the machine has been set up for another piece of work, so that it is necessary to dismantle it. The operator first removes all the tools from the turret and the cams from the front and rear end shafts. He also removes the spring collet by removing the cap, and the feed-tube by lifting the latch; then he unscrews the feed finger, which is threaded left-hand. The change-gears are now removed, leaving the machine dismantled ready for the new job.

To proceed, the operator first inserts the spring collet, puts on the cap, and then screws the new feeding finger into the feed-tube, and inserts the latter into the spindle. He then puts the stock into the feed-tube, and places a suitable pipe in the stand in which the stock is to revolve. This pipe should be central with the feed-tubes, thus reducing the wear in the hole of the latter. The belts are now placed on their proper cones to give the desired spindle speeds. All belts should be without rivets, and preferably should be laced with wire, as this gives a smoother running belt. All the bearings should be oiled with good machinery oil, and also the friction clutch. The latter should be oiled at least twice a day.

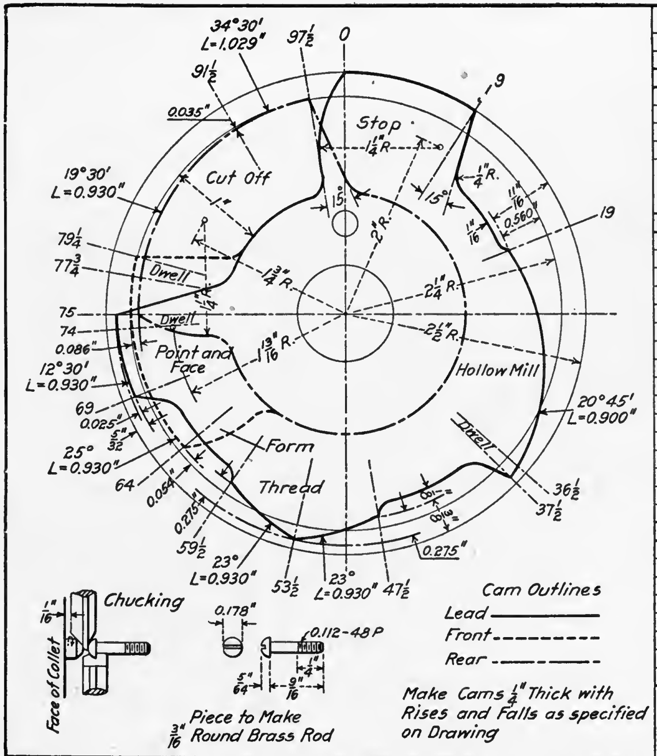

Name of Piece: Button Head Screw

Gears	Time to Make 1 Piece 6½ Seconds	Spindle Speeds	
No. 52 On Drive Shaft	Gross Production 10 hours = 5538	Forward	Backward
No. 34 On Worm Shaft	Made on No. 00 B.&S. Auto. Scr Mach.	2400 R.P.M.	2400 R.P.M.
No. On 1st Stud	Material Used: 3/16″ Round Brass Rod	R.P.M.	R.P.M.
No. On 2nd Stud	Remarks: Use 6 hole Turret	Surface Speeds	
	Machine, and Tool Numbers	For Stock	117.81 F.P.M.
	as specified	For Thread	70.37 F.P.M.
		For Drilling	F.P.M.

Revs.	Hund's.	Start	Finish	Rise	Feed	Operations
23.4	9	0	9			Feed stock to stop and chuck
26.0	10	9	19			Revolve Turret
48.1	18½	19	37½	0.560″	0.0123″	Turn (Hollow Mill) Dwell 0.10
26.0	10	37½	47½			Revolve Turret
15.6	6	47½	53½	0.275″	0.122″-48	Die on } Reverse Spindle
15.6	6	53½	59½	0.275″	0.122″-48	Die off }
11.7	4½	59½	64			Clearance and Revolve Turret
38.65	15¼	64	79¼	0.054″	0.00155″	Form (Circular Tool) Dwell 0.15
15.6	6	69	75	0.025″	0.00192″	Point and Face Dwell 0.10
42.9	16½	75	91½	0.051″	0.00119″	Start Cut-off }
15.6	6	91½	97½	0.035″	0.00224″	Finish Cut-off } Circular Tool
6.5	2½	97½	100			Clearance

Special Tools	Tool No.	Dwg. No.	Standard Tools	Tool No.	Dwg. No.
Circular Form Tool	1678	L.7218	Stop	1368	T.S. 50
Circular Cut-off Tool	1679	L.7218	Floating Holder	1472	L.7685
Cams. Lead, Front, Rear	1680	L.7219	Hollow Mill	1763	T.S.100
Slotting Bushing	1681	L.6301	Button Die Holder	1875	L.7860
			0.112-48 P Button Die	1673	T.S.150
			Pointing and Facing Tool	1520	L.7679

Remarks:

Fig. 8. Record of Cam and Tool Equipment for Making a Button-head Screw on the No. 00 Brown & Sharpe Automatic Screw Machine

After the belts have been placed on the proper cones, the collet, feed finger, etc., having been inserted, the change-gears should be put in place. The handwheel is next put on for operating the machine by hand. Before putting on the cams, set the collet so that it has the proper grip on the stock; then open the collet again and push the stock out far enough to be faced off by the cut-off tool. After closing the collet, start the spindle and set the cross-slide circular form and cut-off tools at the height of the center of the work, and in their proper relation to each other. Next put on the front and rear cross-slide cams, and if the job requires a threading operation, as in this case, the shaft with the drum carrying the tripping dogs for reversing the spindle should be connected with the front camshaft.

Next, set in the cross-slides by adjusting nuts A_3, Fig. 1, so that the circular form and cut-off tools travel in to the required distance. Place the hollow mill in the turret, set it correctly, and also set the tripping dog so as to revolve the turret. Put the box-tool in the turret, set it, and also set the dog for indexing the turret. The die is then set as previously described, and all the tripping dogs are set to index the turret completely around. After all the tools have been set in their proper relation, make a piece, except threading, by turning the handwheel; at the threading operations, drop down the die so that it does not pass onto the work. Gage the piece thus made; if it is correctly to size, and the tripping dogs for reversing the spindle and the die have been properly set, throw the feed clutch by means of handle *P* (Fig. 1, Chapter II) and start the machine.

When the bar is all used up, the chuck should be opened by tripping the lever, and the turret revolved by withdrawing the locking pin, so that it will not interfere with the short piece left in the chuck, which should be driven out for the insertion of a new bar. To insert the new bar, turn the handwheel sufficiently to bring the shoulder of the feed-tube against the end of the spindle, and push out the bar just far enough so that its front end can be faced off with the cut-off tool. Now turn the turret back into position and start the machine by throwing in the clutch. The ends of the rods of stock should be ground to remove the burrs, thus insuring their entering and feeding freely and evenly through the feed-tube. The work should always be tested after the insertion of a new bar of stock. If the parts made are short or thin, the tools will become dull much more quickly; consequently, the work should be tested more frequently in that case, so that any errors may be corrected as soon as possible.

Adjusting the Cleveland Automatic Machine. — The setting-up of a Cleveland automatic screw machine is principally a matter of adjusting the cams on the cross-slide drum, as well as the cams controlling the variable tool feed and the stock feed. Assuming that all the tools and other equipment that have been used on previous jobs have been removed, the first step is to insert the chuck. The hood on the nose of the spindle is first removed by a spanner wrench, and the chuck is then inserted, care being taken to remove all chips and heavy oil which would retard its action. When the chuck is of the pad type, it is only necessary to remove the pads and replace them by those suited to the size of the stock that is to be handled. After putting the chuck in place, the feed-tube is then taken out and the desired size of shell or pads inserted. After

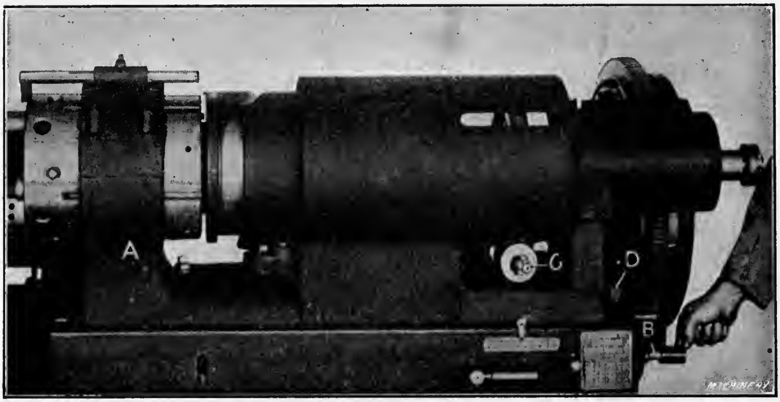

Fig. 9. Turret-slide of Cleveland Automatic, which is Adjusted Along the Bed to Suit the Various Lengths of Work and Turret Tools

putting the chuck and feed-tube in place, the chuck is then closed by hand and the cross-slide tools are placed in their approximate positions, allowing about $\frac{1}{8}$ inch clearance between the front face of the chuck and the inner face of the cutting-off or forming tools.

Adjusting the Turret Head. — Following the insertion of the chuck and feed-shell, the next move is to adjust the turret head *A* (Fig. 9) along the bed to accommodate the length of work to be turned. This adjustment is made by turning screw *B*. The turret should be advanced to full stroke, that is, to its extreme forward position, by means of shaft *C* operated by the same crank handle that adjusts screw *B*, and the turret tool having the greatest body length should be used in determining the position of the turret head on the bed. In making this adjustment, the clamping screws which fasten the turret head to the bed should be released; one of these screws is shown at *D* and the other is at the front end of the turret head underneath the bed. These should be securely tightened when the turret head is in the desired position.

Setting the Turret Tools. — Turning our attention now to the turret, the first tool to be set is the gage stop. This is used for gaging the stock to the correct length and should be set in relation to the cut-off tool. The proper procedure is to measure from the outside face of the cut-off tool to the front face of the gage stop, when the turret is advanced to its extreme forward position. All the other tools are then placed in the turret in their proper holes. In setting the turret tools, the exact length required for the job is secured by measuring from the face of the gage stop to the cutting tool, or from the outer face of the cut-off tool to the front edge of the cutting tool, with the turret advanced to its extreme forward position, as before. No attention is given to the final setting of the cutters in a box-tool, until all the tools have been set in their proper relative positions.

Adjusting Cross-slide Operating Cams. — The cams for operating the cross-slide are of curved segment form and are held on a drum *F* shown in Fig. 10. The procedure in setting these cams is to first advance the turret *E* to its full outward stroke and then bring the cross-slide by hand to the approximate position that the forming tool will occupy when it has finished taking a cut. The bellcrank lever *G* is then moved until the roll touches the flange of the cam drum, and a mark is made with a lead pencil, indicating the position of the roll on the surface of the drum. Then the machine is operated again by hand, rotating the drum about one-half turn, and the high point of the forming cam *H* is placed so that it coincides with the circumference of the circle previously outlined. The cam for operating the cut-off tool is located in the same manner, and is generally the last to be set.

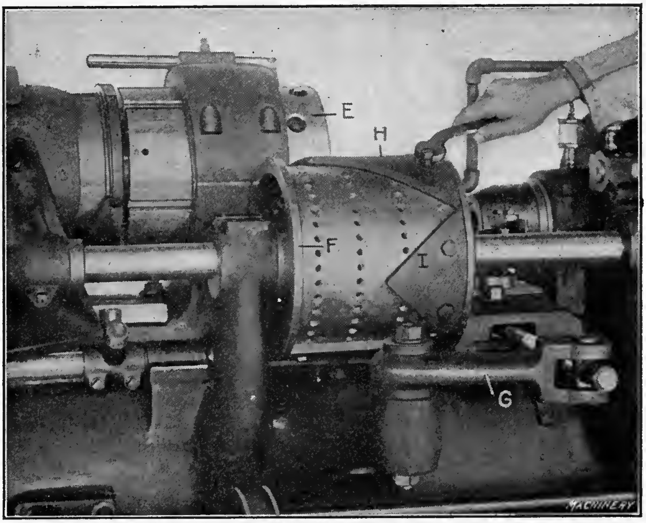

Fig. 10. Cams on Cross-slide operating Drum, which are moved around to the Required Position and Clamped by Cap-screws

The relief cams *I* (only one of which is shown) that draw the cross-slide to a central position, after the forming and cut-off tools have finished their operations, are next adjusted. The cap-screws fastening these cams to the drum *F* are released, and the cams are shifted around so that the high points contact with the roll and hold the slide in the central position, after which the cams are clamped to the drum.

The cross-slide connecting-rod which controls the exact position of the cross-slide is adjusted as required by the movement of the forming and cutting-off tools. Two adjusting nuts provided with individual locking nuts are located on this connecting-rod, and these are adjusted back and forth in relation to the central pin in the bellcrank lever *G*, in order to carry the slide to its exact position. After making this adjustment of the cross-slide, the machine should be turned one complete cycle by hand, in order to insure the operator that each tool has been properly placed.

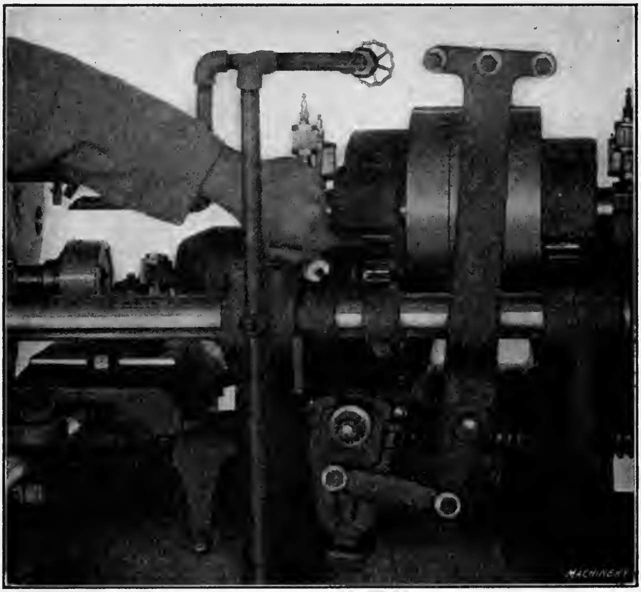

Fig. 11. Adjustment of Belt-shifter Dogs for Controlling Speed and Direction of Spindle Rotation

Making the Speed Changes. — The next point that requires attention is the correct spindle speed to use. This is governed largely by the material that is to be operated upon, and to some extent by the tools that are to perform the operations. Fig. 11 illustrates the method of adjusting the belt-shifter dogs to obtain the different spindle speeds required to suit the tools that have been placed in position. When a job is to be threaded with a spring or button die, or a tap is to be used, it is necessary to set the reversing dogs to reverse the spindle exactly at the time when the turret is at the full forward position.

In order to make this adjustment without danger of injuring the tap or die, the bar stock should be removed from the spindle, the turret advanced by hand to the extreme forward position, and the belt-shifter dog set to reverse the spindle at this point; then the turret is backed up by hand and the power feed is thrown in, care being taken to observe whether the spindle reverses just as the turret starts on its backward motion. If the spindle reverses a little too soon or a little too late, the belt-shifter dog is adjusted slightly to correct the time of reverse. When it is seen that the spindle reverses exactly at the moment the turret starts on its backward stroke, the adjustment is correct, and the bar stock may then be replaced in the machine and the threading die will cut correctly. No adjustment of this kind is necessary when self-opening dies or collapsible taps are used, because, when the thread is finished, the chasers clear the work, and it is not necessary to reverse the spindle. There are several different

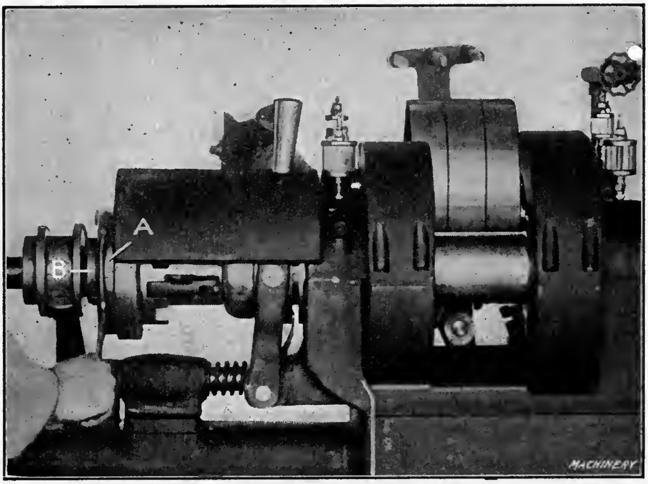

Fig. 12. Adjustment of Compression Collar Nut for Varying the Gripping Pressure of the Chuck on the Bar

combinations and arrangements of spindle drives possible on the Cleveland automatics.

Chucking and Feeding Adjustments. — Assuming now that the tools have been set in approximately correct positions, the next step is to place the bar of stock in the spindle of the machine and adjust the chuck to its proper grip on the work. This is accomplished by means of an adjusting nut *A* shown in Fig. 12, which is located at the rear end of the spindle. In this illustration, the operator is shown turning the adjusting nut with the spanner wrench. Before adjusting this nut, it is necessary to release the binding nut *B* until compression nut *A* is released. Adjusting nut *A* is turned until the chuck has sufficient grip on the work to prevent it from being shifted by the action of the turning tools. When it is desired to tighten the grip of the chuck, the adjusting nut *A* is turned

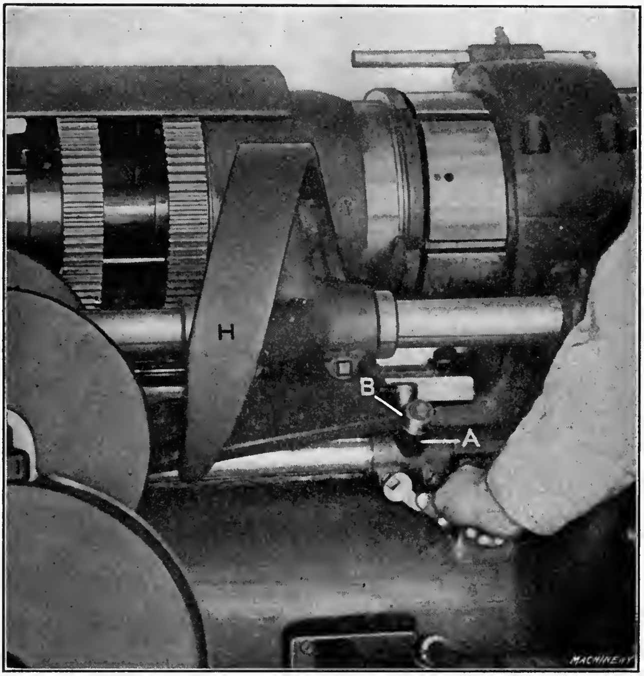

Fig. 13. Method of Regulating the Length of the Stock-feeding Movement

toward the right; turning it toward the left loosens the grip of the chuck. This direction is taken with the operator facing the spindle and standing at the end of the machine. When the correct adjustment of the chuck on the work is obtained, the binding nut *B* is tightened to lock the adjusting nut.

The next step is to set the stock-feeding mechanism so that the bar will be fed out to the correct distance. Fig. 13 shows the method of making this adjustment, which is secured by shifting the position of the stock feed-rod head *A* along the shaft so that cam *H* will engage with the roll *B* at a point that will feed the stock out to the desired length. The last $\frac{1}{4}$-inch movement of the stock feed-rod should take place after the chuck is opened. This will give time for the spring chuck to open fully before the stock starts to feed to the gage

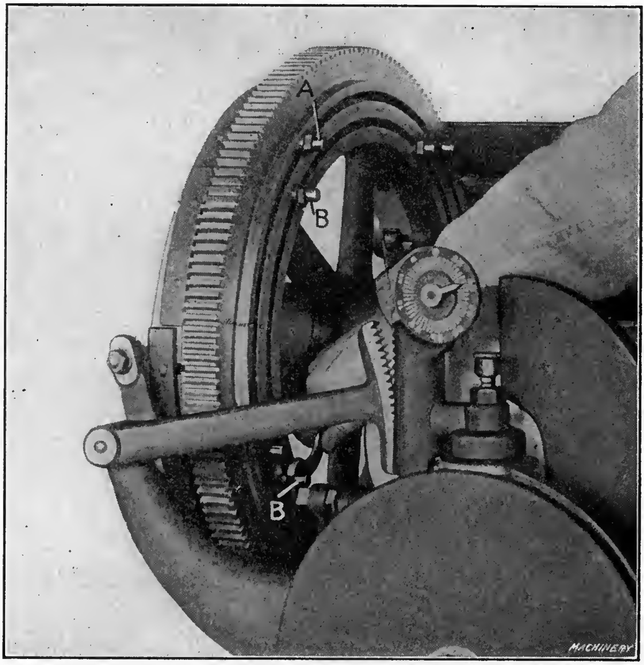

Fig. 14. Setting the Shifter Pins on the Regulating Drum so that the Feeding Movements and the High-speed Movements occur at the Proper Time

stop. The stock-feeding mechanism should be set to feed about $\frac{1}{2}$ inch more than the job requires, and the gage stop in the turret will force the stock back to the desired length just as the chuck is closing on the bar.

Setting the Feed-shifting Pins. — The feed on the Cleveland automatic is changed from the slow to the fast speed through a sliding clutch. This is secured by means of shifter pins *A* and *B* (Fig. 14) which are held in T-slots in the rear face of the regulating drum. In setting these feed shifter pins, each tool in the turret is advanced by hand, so that it is brought to within about $\frac{1}{32}$ inch of where it should start to cut. Then the feed shifter pin *B* is moved around in the T-slot of the regulating drum and set to shift the clutch to the slow speed at this point. In the case of a tap or die, the tool should be brought to a position $\frac{1}{4}$ inch from the face of the work. The feed shifter pins *A* in the outer T-slot of the regulating drum control the fast or idle movements of the machine, and should be set to shift the clutch into the fast speed at the completion of each tooling cut, whereas the pins *B* in the inner T-slot control the shifting of the clutch to the slow speed and are set to move the clutch at the point previously described.

Adjustment of Feed-regulating Drum. — One of the important features of the Cleveland automatic is the regulating drum, which is used for securing separate feeds for each tool in the turret and on the cross-slide, the feed per revolution of the spindle being controlled by segment cams which can be adjusted while the machine is in operation. Fig. 15 shows the setting or adjusting of the feed regulating cams *I*. These cams are attached to the flange of the regulating drum by means of two cap-screws. The flange of the drum is slotted to allow adjustment of the cams. By shifting the position of the cams, any desired feed can be secured for each individual tool. Moving them toward the outer edges decreases the feed, and in the opposite direction increases the feed. The edges of cams *I*, through the medium of a bellcrank lever, guide the position of roll *J* automatically up and down between the friction disks *K* which drive the turret drum and camshaft.

This makes it possible to increase or decrease the tool feed as required, to suit the material being cut and the type of tools performing the operations.

The position of the pointer on indicator *L* determines the location of the feed regulating cams when setting up a job for the second time. The indicator is held on an arm moving up and down on a post; this arm receives its motion from the bellcrank lever which, in turn, is operated by the cams on the regulating drum. The position of the pointer is recorded on a record sheet which should be filled out before changing to other work, and used as a guide when setting up the same job again. This record sheet shows the position of all adjustable cams and gives all the necessary tooling data. In addition to the adjustments previously mentioned, there are positive stops for the front and rear of the cross-slide which need to be set and which make extreme accuracy easily obtainable. These stops are in the center of the slide and control the exact position of the tools.

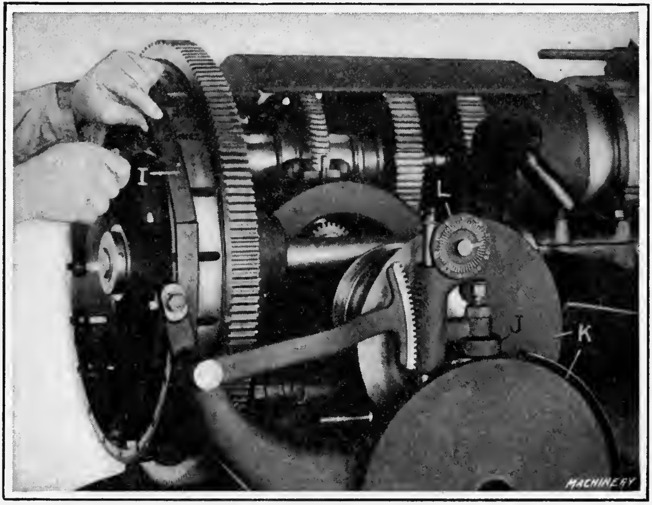

Fig. 15. Adjustment of the Regulating Drum Segment Cams to give the Required Rate of Feed for the Turret and Cross-slide Tools

Adjustment of Acme Multiple-spindle Machine. — To make clear the methods followed in setting-up and operating the "Acme" automatic multiple-spindle screw machine, a representative piece will be taken as an example, and the various steps to be followed in setting-up and operating the machine for producing this piece will be dealt with in detail. While there are many questions that will arise in setting-up the machine for producing various parts, where actual experience in work of a similar character would in many cases eliminate the necessity of experiment, if the operator has a general idea of the various working mechanisms of the machine and their relation to each other, he will experience little difficulty in adjusting the machine for average work.

Assuming that the machine has been set up on a piece of work, the first thing that the operator does is to dismantle those parts, tools, gears, cams, etc., which have to be changed for every new job, leaving any cams or tools in position that can be used on the new piece. As a rule, the spring chucks and feed chucks are removed first and are replaced by those of the proper size and shape. Then the tools in the main tool-slide and the side- and top-working tool-slides are removed. When a straight blade cut-off tool is used in the cut-off tool-slide, it generally can be used for more than one job, so that in many cases this tool need not be removed. The cams on the main drum, and also the cams for operating the side-working tool-slides, are now removed and replaced by cams which will give the required amount of travel. The back-gears for rotating the end-working tools and the threading spindle are next removed and replaced by gears that will give the proper speeds for the work in hand.

If it is necessary for the operator to proceed without instructions, he must first decide on the best method of applying the tools before he begins to set up the machine. As this is frequently the case, it may be advisable to give a short description of some of the points which have to be taken into consideration when deciding on the best method of tooling the machine for producing any certain part.

Deciding on the Method of Tooling. — The four spindles of the Acme automatic multiple-spindle screw machine may tend to confuse a new operator, and to give him the impression that a clear understanding of the method of tooling is more difficult to obtain than when using a single-spindle machine. The chief reason for this is that all the tools are used at once; however, this fact frequently makes it possible to rearrange the tools considerably on repeating a set-up, and what might have been considered the best method of tooling a certain piece when it was first made may prove inferior to the new

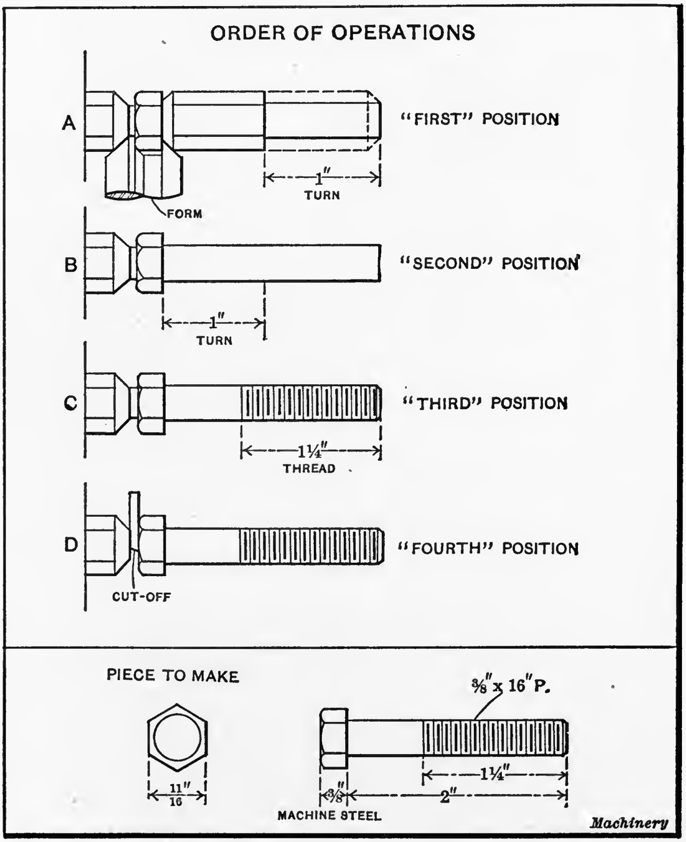

Fig. 16. Successive Operations for Producing a Hexagon-head Cap-screw on a Multiple-spindle Machine

method. This possibility of improving upon the method of tooling sometimes changes the order of operations to such an extent as to entirely change the method of manufacture.

As an illustration, assume that it is necessary to produce the cap-screw shown in Fig. 16, which is to be made from cold-rolled hexagon steel, $\frac{11}{16}$ inch in "diameter" across the flats. As this is just an ordinary cap-screw, the body need not be shaved, but can be produced accurately enough for all practical purposes, by dividing the cuts on the body between two box-tools, which are held in the end-working tool-slide. The operation at *A*, which takes place in the "first" position, is performed with a circular form tool and box-tool. The circular form tool forms the head and "necks" or grooves the piece, whereas the box-tool, held in the "first" position tool spindle, turns one-half the length of the body. In choosing the lead cam for the forward travel of the main tool-slide, a one-inch cam is sufficient, owing to the fact that the two box-tools are working on different bars at the same time. The second box-tool cutter is set one inch further out from the face of the main tool-slide than the first box-tool cutter, in order to complete the turning on the body of the cap-screw.

Calculating the Production per Hour. — As all of the end-working tools come up to the work at the same time, it follows that in most cases all four tools from the end would be at work on different bars at the same time. In this case, the screw only requires the use of three end-working tools — two box-tools and a die — although a pointing tool could be used if necessary to make the point on the screw after it is threaded. By considering the operations on this cap-screw, it will be found that the longest operation is that necessary to turn one-half the length of the body; then to find the production per hour, it is first necessary to determine the speed at which it is best to run the work. As a rule, ordinary cold-drawn stock can be worked at from 65 to 75 surface feet per minute for forming tools or box-tools. In this case, select 75 surface feet as a suitable speed; then, assuming that the bar is round and of a diameter equal to the distance across the flats, it will be found that a spindle speed of 420 revolutions per minute will be about right. The table of spindle speeds accompanying the No. 53 machine shows that 445 is the closest number obtainable. As the speed will not be increased excessively, the back-gears for this higher speed may be used.

The next step is to find the number of revolutions of the spindle required for the box-tool to travel one inch along the work, at a certain feed per revolution. The body diameter of this cap-screw is $\frac{3}{8}$ inch, while the diameter across the corners is 0.794 inch, giving a depth of cut of 0.209, or approximately $\frac{7}{32}$ inch. If a feed of 0.004 inch per revolution is selected and 0.040 inch allowed for the tool to approach the work, it will be found that it will take 260 revolutions of the spindle for the box-tool to travel the distance required.

There are several methods followed in obtaining the production of the Acme automatic screw machine, one method being based on the assumed output per hour, which can be obtained by the following formula:

$$P = \frac{R \times 60}{r},$$

in which P = assumed product in pieces per hour;
R = revolutions per minute of work-spindle;
r = revolutions of spindle required to complete the longest single operation.

Inserting the values previously obtained in this formula:

$$P = \frac{445 \times 60}{260} = 103 \text{ (approximately).}$$

In assuming this product, the time required to feed the stock, index the cylinder, etc., was not considered, and, instead of calculating the actual time required for these idle movements, an approximation is made. Referring to the change-gear table for the machine that is to be used, it will be found that the next closest production to 103 is 98.5; then, by reducing the production to 98.5 pieces per hour, allow sufficient time to take care of the idle movements of the machine.

Another method is to calculate the time required for the longest single operation in the manner just described, and then determine definitely the actual time required to feed the stock, index the cylinder, etc. This is added to the time required for the longest single operation, the sum giving the exact time required to produce one piece. This method, while considerably longer than the other, has the advantage of working on a definite basis and may be clearly understood by those not entirely familiar with the construction and operation of this machine.

Spring Chucks and Stock Support. — Assuming that the machine has been dismantled and is to be arranged for the operation shown in Fig. 16, the first thing to consider is the insertion of the proper spring chucks and feed chucks for feeding and holding the bars. A round chuck should never be used for holding either square or hexagon stock, but a chuck of the same shape as the work should always be used. After the feed chuck and spring chuck have been put in place, the bars of stock are inserted in the spindles, the chucks being opened and the bars pushed through, so that they extend far enough out of the chucks to allow for cutting off the finished parts. As a rule, it is good practice to put the bars of stock into pipes for guiding them, before the machine is started. In putting the stock-supporting reel in place, when the bars are already in the spindles of the machine, the reel is simply slid back over the rear bracket until it passes the end of the bars, and is then pushed forward again, the bars passing into the pipes. A satisfactory method is to leave the reel in place and push the rods through the pipes into the spindles, then slide the reel back slightly to facilitate chucking, and replace it again in the running brackets before starting the machine. When the stock is small in diameter, the ends projecting from the rear end of the machine should be guided by the pipes of the reel, as this prevents damage to both the machine and the operator, due to a slight twist in the bars which causes them to rotate eccentrically and buckle.

Selecting and Changing the Back-gears. — After the stock has been inserted in the machine, and the chucks closed on it by cranking the machine, the next step is to obtain the desired spindle speed. This is secured by removing the back-gears shown in Fig. 5, Chapter III, and replacing them with the gears which will give the proper speed for the work in hand. For the operation shown in Fig. 16, a spindle speed of 445 revolutions per minute has been selected. Referring to the spindle-speed table for the No. 53 machine, it will be found that the gears should go on as follows: *A* — 52; *B* — 46; *C* — 26; *D* — 32. In putting on the back-gears, see that they do not mesh too closely.

Selecting the Lead and Forming Cams. — A feature of the Acme automatic screw machine which should be borne in mind is that the lead cam, located on the drum for governing the forward advance of the main tool-slide, is not adjustable, but is bolted to the drum. Now, for different work, these cam strips which are all of the same length, but have different rises, are put on the drum *G* (Fig. 1, Chapter III) and clamped by cap-screws. For making the cap-screw shown in Fig. 16, it is necessary that the main tool-slide travel forward approximately one inch, so that in this case a lead cam having a rise of one inch in its length is selected. To determine this rise, measure both the narrow and wide ends of the cam strip, and the difference between these two dimensions will be the lead of the cam.

To select the forming cam for operating the forming tool, measure the distance between the largest and smallest diameters of the work formed by it, and divide the result by 2. In this case, it will be found that the forming cam should have a rise of $\frac{7}{32}$ inch. All forming cams are plainly marked on the end with the rise for which they were laid out. It is not always possible to select a forming cam which will give the rise to within a few thousandths of an inch of that required, but this does not make much difference, as the longest single operation governs the time required to make one piece, and all the other operations are completed in that time. In this example, as is usually the case, the forming is one of the shorter operations and, therefore, it does not matter if the forming tool moves a little farther than is actually required, provided its inward movement is arrested at the proper point.

To select the cut-off cam, measure the diameter of the piece to be cut off and at the same time make allowance for the angle on the point of the cut-off tool, so that it will pass the center of the work. For cutting off the cap-screw shown in Fig. 16, a $\frac{1}{2}$-inch cut-off cam, which actually has a rise on the cam of $\frac{1}{4}$ inch for cutting through a bar $\frac{1}{2}$ inch in diameter, should be selected. The cut-off cams are all marked on the end to correspond with the diameter of the piece to be cut off.

Placing the Cams in Position. — In placing the lead cam on the drum, when the operations performed from the main tool-slide are of a heavy nature, a backing-up strip should be fitted into the groove in the drum, behind the lead cam, so as to resist the thrust of the cutting tools. A starting strip should also be put on just in front of the point where the lead cam strip starts to bring the tool-slide up to the work, and a take-back cam wide enough to draw the end-working tool-slide back sufficiently to clear the work when the cylinder is indexing should next be put in place. This starting strip is adjusted even with the starting or narrow end of the lead cam, and is used to bring the tools up quickly to the work. When the roller is working on the "fast-angle" cams, the camshaft is rotated at an increased speed, so that all the movements when the tools are not cutting are a great deal more rapid than the cutting movements. This is done to reduce the idle time and is accomplished through the medium of the clutch mechanism described in Chapter III.

In placing the cut-off cam in position, it should be put on the disk opposite the one on which the forming cam is held, and the take-back cam is also put on the same disk and attached by screws. There are two sets of holes in the disk for the cut-off cam, and the position of this cam on the disk depends upon whether the "fourth" end tool position is in use or not. The disk for the forming cam has only one set of holes, so that it is impossible to adjust it.

Setting the Circular Forming and Cutting-off Tools. — The circular forming tool *A*, Fig. 17, is held to an oblong-shaped tool-holder *B* by a stud and nut. This holder is held in the slot in the forming slide by a strap. For locating the cutting edge of the forming tool in the proper relation to the work, a tool setting gage *C* is used. This is held by the operator against the bottom face of the forming tool holder, and the nut for holding the forming tool to the holder is then tightened. The holder is then placed in its proper position in the slot in the tool-slide and clamped. To bring the forming tool into its correct relation to the work, the machine is cranked or turned by hand until the roll is just over the starting angle on the forming cam; then the screw in the back of the slide is adjusted until the forming tool just clears the work.

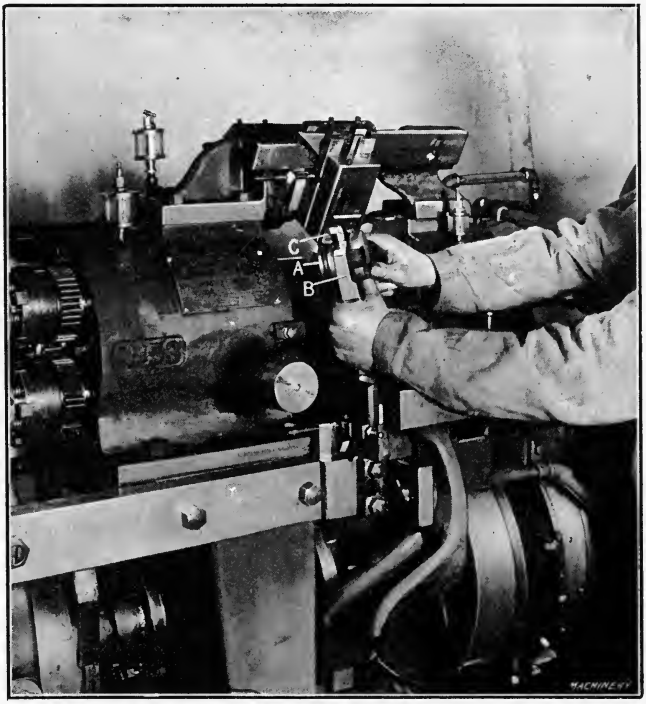

Fig. 17. Setting the Cutting Edge of a Circular Forming Tool to the Proper Height with a Tool-setting Gage

The adjusting screw on the slide in which the forming tool is held should be set to stop the slide just as the cam lever clears the highest point of the cam. Usually it is good practice to put a slight tension on this lever (by adjusting the screw a little farther in than necessary), so that, when the extreme knife edge of the tool is removed, thus making the work larger in diameter, a slight outward turn of the adjusting screw will bring the work back to the required diameter.

The next step is to set the cut-off tool. This tool, when of the blade type, is set so that its top cutting edge is on a line with the center of the work. It should also be set in a horizontal position relative to the forming tool, by adjusting the screw in the slide, which is provided for that purpose. After the form and cut-off tools have been set in approximately the correct relation to each other, the next step is to set the form tool so that it will turn the work to the required diameter. To do this, "crank the machine" or turn the camshaft by applying a hand crank to the worm-shaft, until the wedge is disengaged from the wedge fingers; then push the rod through the chuck until its end passes the outside edge of the circular form tool. Continue cranking until the rod is chucked and the roll on the lever operating the forming slide is on the starting point of the cam rise. The form tool can now be adjusted inward, the machine started, and a cut taken. It is good practice to adjust the form tool to give the required diameter, before going further. It is necessary to set the cut-off tool to remove the formed ends during the adjustment of the forming tool. After one piece has been cut off, it can easily be seen whether the cut-off tool has been set in the proper relation to the center of the stock.

Setting the Box-tools. — Assuming that the forming and cut-off tools have been properly set, place the box-tool in the "first" position tool spindle. Then open the chuck and feed out the stock. When the work is long or of small diameter, it is good practice, in setting the box-tool, to feed the stock out only a short distance from the face of the chuck, to prevent springing or bending of the bar while adjusting the tool.

In setting the box-tool, release the rollers and set the front turning tool to turn from 0.005 to 0.007 inch smaller than the proper diameter, after which adjust the rollers until they come into light contact with the piece to be turned. Then by adjusting the front cutting tool upward slightly, the tool and rollers will come into the proper relation with each other. In many cases, a slight additional adjustment of the box-tool cutter is necessary after the machine has been started and the power feed is used.

Fig. 18. Setting the "First" Position Box-tool to turn to the Required Distance on the Work

Several methods are in common use for setting the box-tool to turn to the desired distance. One of these is to crank the machine until the roll just starts on the rise of the lead cam; then to operate the screw *A*, Fig. 18, in the tool spindle, until the box-tool cutter *B* just touches the work which it will be assumed has been fed out to the required length. After adjusting in this manner, tighten the screw holding the box-tool in position in the tool-holder. After the "first" position box-tool has been set in position in proper relation to the work, the power feed may be thrown in to index the cylinder by operating the starting clutch lever at the front of the machine.

This will bring the rod just operated upon into the "second" position. Now adjust the gage stop and set the feed stop on the lever operating the feeding mechanism, so that the stock will be fed to the length of the piece to be made, being sure to ascertain beforehand that the feed-tube is withdrawn sufficiently to insure the end of the rod coming in contact with the gage stop. When the stop has been properly set, the stock fed the proper distance, and the cam roll-holders set so as to give ample clearance for all tools, crank the machine until the cam roll beneath the main tool-slide is in contact with the start of the rise on the lead cam.

After having set the "first" position box-tool, again crank the machine until the forming tool and "first" position box-tool have completed their operations and another indexing of the cylinder is about to take place. After this indexing has proceeded about halfway, place the "second" position box-tool back far enough to clear the stock during the indexing operation. Continue cranking until the cam roll is in contact with the cam, as before; then adjust the "second" position box-tool so that it will "pick up" or continue the cut at the position where the "first" position box-tool finished, and at the same time, set the rest and front cutting tool to the diameter formed by the "first" position box-tool. To bring the box-tool out so as to turn up the correct length, an ordinary scale *C*, as shown in Fig. 18, is sometimes used. Some operators prefer the "scale method" of setting the end-working tools, instead of working from the end of the bar.

When the screw is to be pointed, a pointing tool can be held in the "first" position box-tool, or, if the "fourth" position tool spindle is not used, a pointing tool can be used from this position. Assuming, in this case, that the pointing tool is in the "first" position box-tool and that the gage stop, forming tool, box-tools, etc., have been properly set, release the set-screw which holds the pointing tool. Then crank the machine until the tool-slide travels forward the required distance, and adjust the pointing tool out until it will remove the desired amount of metal from the end of the screw.

Selecting Change-gears. — After all the tools previously mentioned have been set in their proper positions, several pieces are made from the bars, the machine being operated by power feed. Then change-gears are selected to give the desired rate of production. As a rule, in setting up an Acme automatic screw machine, the gears which have been decided upon to give the desired production are not put on until all the tools have been properly set and the various parts of the machine work in the proper relation to each other. Most operators set-up the machine on a "slow" set of gears, and, after the machine has been set correctly, put on the gears which will give the desired production. This change-gear mechanism was described in connection with Fig. 4, Chapter III. For the piece chosen as an example (see Fig. 16), it was decided that a production of 98.5 pieces per hour would be suitable. Referring to a table of change-gears, it will be found that the first gear on the shaft should have 36 teeth; the second gear on the shaft, 82 teeth; the first gear on the stud, 74 teeth; and the second gear on the stud, 28 teeth. After these gears have been put in their proper positions, the next step is to set the threading spindle.

Setting the Threading Spindle. — On the Acme multiple-spindle automatic screw machine, the work-spindle is held stationary while a right-hand thread is being cut, and the die-spindle carrying the threading tool is rotated. When backing off the die or tap from the work, the threading spindle is held stationary and the work-spindle is rotated. The manner in which this is accomplished was explained in connection with the description of the threading mechanism in Chapter III.

In setting the tools for threading, before starting the machine, see that the clearance between the ratchet and pawl extension is anywhere from $\frac{1}{16}$ to $\frac{1}{8}$ inch, when the pin block on the holder and the pin in the spindle are placed end to end (after the pin has been adjusted). It is very important that this precaution be taken, as a " hang up " between these two points might occur, resulting in the stripping of the teeth in the gears driving the holder, should this adjustment not be made properly. For this example, the front face of the die should be set almost in line with the cutting tool held in the box-tool in the "first" tool position, when the die-spindle is as far back as the tool-slide will let it go.

The lead cam does not advance the threading tool at the required rate of feed, as determined by the thread, but provision is made so that the die follows the lead of the thread. It is, therefore, unnecessary to take the lead cam into consideration, as far as the feeding of the die-spindle is concerned. The die pins which actuate the die-holder for driving the threading die should be set so as to carry the die up far enough after the end of the travel of the lead cam has been reached, before allowing the die to rotate freely. In this case, the lead cam only travels approximately one inch, while the travel of the die is 1$\frac{1}{4}$ inch, so that it will be necessary to set out the die pins. After all the tools have been properly adjusted and are working satisfactorily, set the cam dogs which shift the clutch to the direct drive, so that they operate at the proper time in relation to the cutting tools and the indexing of the cylinder. As a general rule, the clutch should be shifted to the direct drive when the die or tap is just free from the thread and the rolls have cleared the cutting-off and forming cams. The clutch again shifts to the gear drive just before the tools begin to operate.

Calculating Speed of Work-spindles. — The speed of the work-spindles obtainable by direct drive and through the back gearing may be obtained from tables, but it might be possible, in some cases, to secure more satisfactory speeds with gears having a different number of teeth than those given in the table. The calculations used in obtaining the proper gears to use for different speeds will be explained. The work-spindles are rotated from the main drive shaft through gearing, the gears on the main shaft driving the spindles through a friction gear that can be disconnected from the spindle when it is necessary to stop its rotation for performing operations such as threading, cross-drilling, milling, etc. As there are only two gears involved in this calculation, the method of obtaining the speeds of the spindle is simple and can be obtained from the following formula:

$$R = \frac{r \times N}{n},$$

in which $R =$ revolutions per minute of work-spindles;
$r =$ revolutions per minute of top or main drive shaft;
$N =$ number of teeth in gear on top or main drive shaft;
$n =$ number of teeth in friction gear.

For example, on the No. 54 machine, $R = \frac{35 \times 480}{45} = 373$ revolutions per minute, approximately. In the calculations to follow, particular reference will be made to the Nos. 54 and 55 machines, as these two sizes meet general commercial requirements.

Calculating Speeds of Threading and "Second Position" Tool Spindles. — A notable feature of the Acme multiple-spindle automatic screw machine is that, for threading, the work is stopped and the die is rotated, but, in backing off, the reverse is the case. In order to fulfill these requirements, it is necessary to gear up the threading spindle to the main drive or top shaft. Two speeds for each speed of the top or main drive shaft are possible by shifting the gearing, one speed being obtained by driving direct through the sliding gear on the main drive shaft to the gear on the threading spindle, and the other by driving through an intermediate and a compound gear. The following formula is used for obtaining the speed of the spindle when driven direct:

$$R_1 = \frac{r \times N_1}{t},$$

in which
$R_1 =$ revolutions per minute of threading spindle (direct drive);
$r =$ revolutions per minute of top or main drive shaft;

N_1 = number of teeth in sliding gear on top or main drive shaft;
t = number of teeth in gear on threading spindle (also called direct gear).

As an example, assume that the speed of the top or main drive shaft is 480 revolutions per minute, then:

$R_1 = \frac{480 \times 26}{55} = 227$ revolutions per minute, approximately.

The formula for obtaining the speed of the threading spindle, when driven through the intermediate and compound gear, is as follows:

$$R_2 = \frac{r \times N_1 \times T}{n_1 \times t},$$

in which

R_2 = revolutions per minute, of threading spindle (gear-driven);
r = revolutions per minute, of top or main drive shaft;
N_1 = number of teeth in sliding gear on main drive shaft;
T = number of teeth in pinion gear;
n_1 = number of teeth in back-gear;
t = number of teeth in gear on threading spindle (also called direct gear).

The "second position" tool spindle which can be used for threading, if necessary, and which in many cases is used for driving small drills at their proper peripheral speeds, is also rotated from the top or main drive shaft through gears. The speed of this spindle can be obtained by the following formula:

$$R_3 = \frac{r \times N_1}{T_1},$$

in which

R_3 = revolutions per minute of "second position" tool spindle;
r = revolutions per minute of top or main drive shaft;
N_1 = number of teeth in sliding gear on main drive shaft;
T_1 = number of teeth in gear on "second position" tool spindle.

Assume that the speed of the main drive shaft is 480 revolutions per minute, then:

$R_3 = \frac{480 \times 26}{36} = 346$ revolutions per minute, approximately.

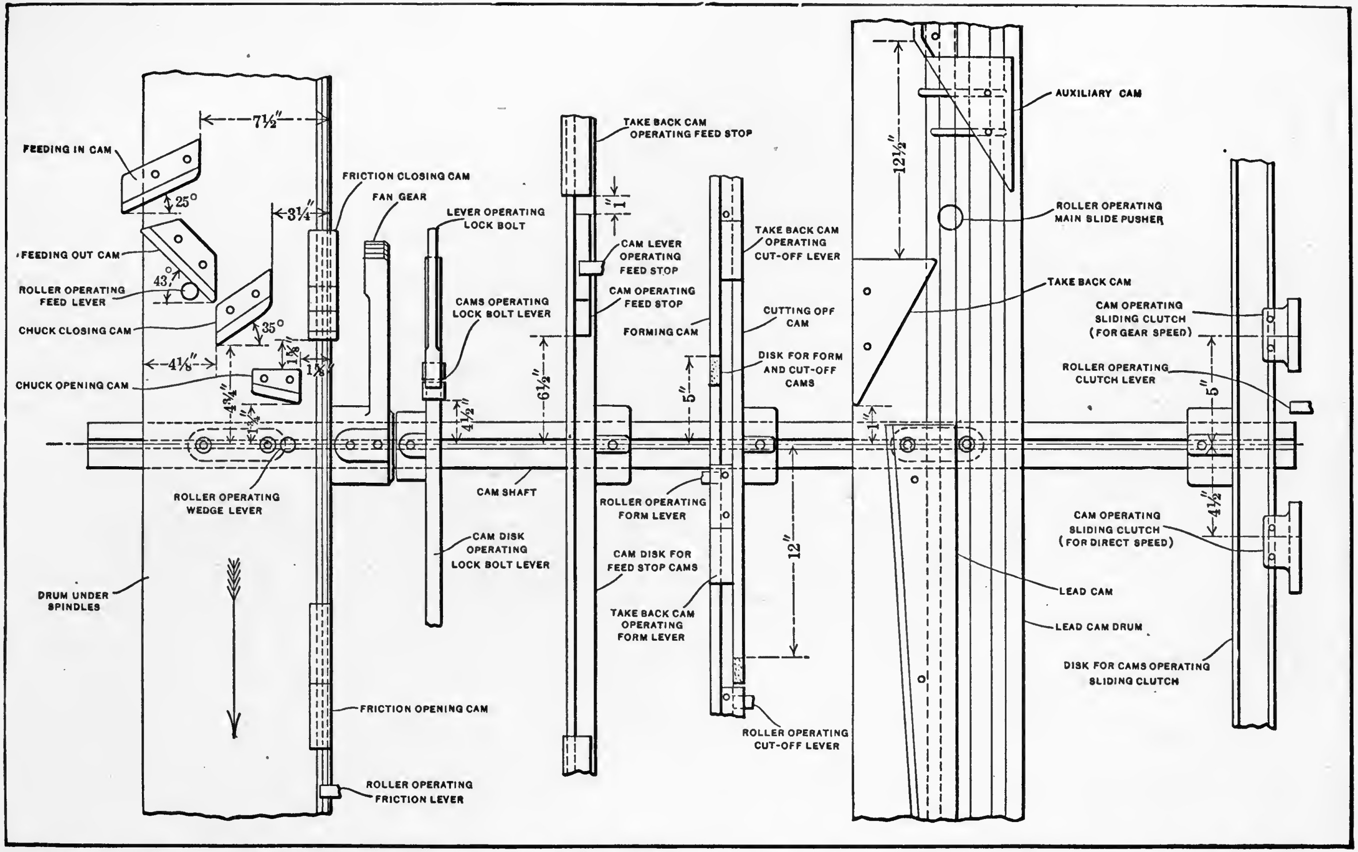

Fig. 19. Developed Plan View of Main Camshaft on Nos. 54 and 55 Acme Machines, showing Position of Cams and Operating Mechanism

Main Camshaft Computations. — The main camshaft on the Acme automatic carries all the cams for operating the various slides, spindle-stopping mechanism, etc., and also the fan gear for indexing the cylinder. As shown in Fig. 19, which is a developed plan view of the camshaft with the drums and cams on it, it will be seen that one revolution of this camshaft completes one cycle of the machine; that is, one revolution of the camshaft would mean the completion of one piece, or four revolutions the complete indexing of the cylinder. The rotation of the camshaft is not connected directly with the rotation of the work-spindles, but indirectly the cams on it govern the rate of travel of the tools on either the top- or side-working tool-slides, and also the end-working slide. It is, therefore, necessary to determine for each job the relation between the speed of the spindle and the speed of the camshaft in order to determine the production per hour, minutes, or seconds.

The camshaft is driven from the main drive pulley through bevel gearing and a Johnson clutch. The clutch forms the connection between the direct drive and gear drive to the camshaft, so that it is possible to rotate the camshaft at a much higher speed for the idle movements than the speed at which it is operating when the tools are cutting. The speed of the camshaft, when driven direct, may be obtained from a table, accompanying the machine, giving the number of pieces produced per hour, as this number will represent the number of revolutions the camshaft makes in one hour. For example, the camshaft on the Nos. 54 and 55 machines has a speed of 576 revolutions per hour. Dividing 576 by 60, the camshaft will be found to make 9.6 revolutions per minute or 0.16 revolution per second. As there are 360 degrees in a circle, and as any point on the cam drum makes 0.16 revolution per second, the number of degrees passed through in this time equals $0.16 \times 360 = 57.6$ degrees, approximately. Now, if it takes one second for the camshaft to rotate through a space of 57.6 degrees, the time required to complete the idle movements can easily be found, when the number of degrees taken up by

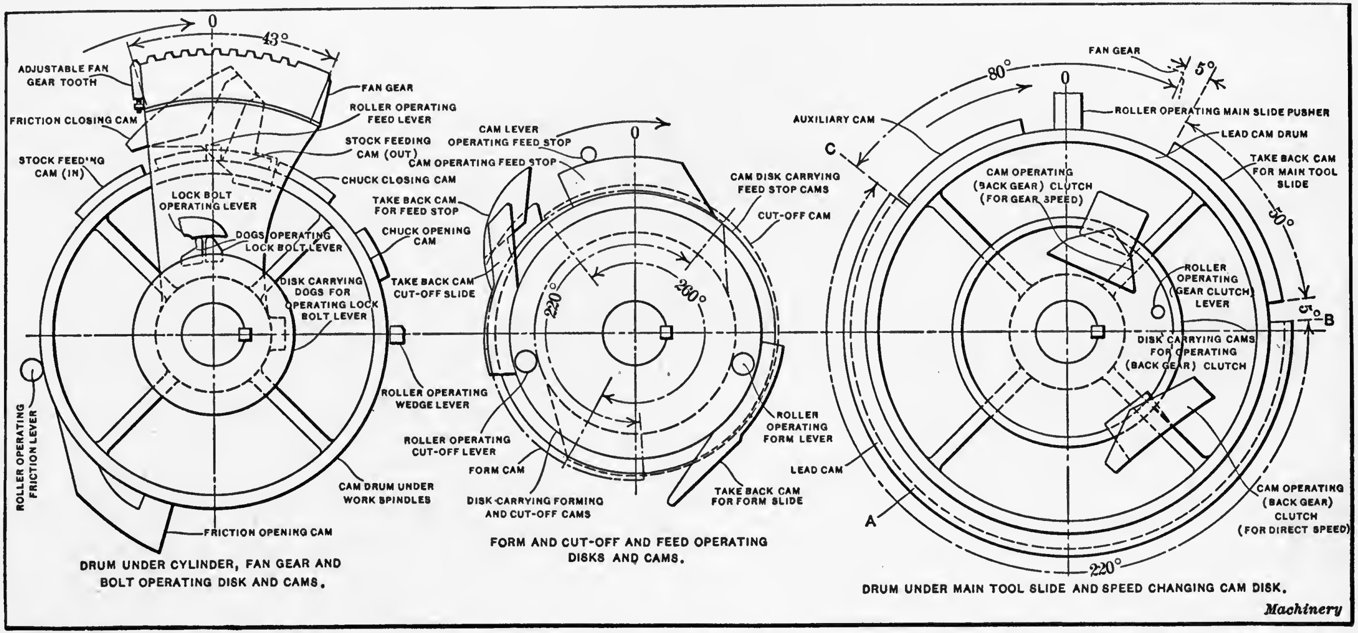

Fig. 20. End View of Cams and Drums located under Cylinder, Cut-off, and Forming Tool-slide and Main Tool-slide on Nos. 54 and 55 Machines

the idle or non-productive movements are obtained. By referring to Fig. 20, in which the various drums and cams have been laid out in their respective positions, and at the point in their rotation at which the machine is indexing, it will be seen that the non-productive movements come in between the time that the lead cam *A* starts to operate and finishes. This applies when the longest single operation is performed by the end-working tools or from the forming slide. Where the longest operation is performed from the cutting-off slide, the idle time is less because there are thirty more degrees taken up on productive work. It is safe to assume that, on 75 per cent of the jobs set up on this machine, the longest operation is performed from the end-working tool-slide; hence, the calculations can be based on the number of degrees of drum surface between the starting and finishing points of the cam. This is found to be 360 − 220 = 140 degrees. When the longest single operation is performed from the cut-off tool-slide, the idle movements occupy 110 degrees of the drum circumference.

Time required for Idle Movements of Machine. — The idle movements of the machine are those required for advancing and withdrawing the tools to and from the work and indexing the cylinder. The stock is fed out and the chuck closed while the cylinder is indexing on the smaller machines and in the "first position" on the larger machines, but, in all cases, as can be seen from a study of Fig. 20, the idle movements more than compensate for the time required to feed out the stock. The three main idle or non-productive movements of the machine should be considered in calculating the actual time required for producing a given part. These movements are all confined to the space between *B* and *C* on the circumference of the cam drum. As all the non-productive movements take place while the camshaft is being driven at its highest speed — direct through the clutch and not through the change gearing — it is necessary to determine what part of the cam circumference these movements occupy and also the speed at which the drum is being rotated when driven direct.

As previously determined, the idle movements or the space on the cam circumference from *B* to *C* equals 140 degrees, and, on the Nos. 54 and 55 machines, the camshaft, when driven direct, is rotated at a speed of 0.16 revolution per second. If it takes one second for the camshaft to rotate through a space of 57.6 degrees, it will require 140 ÷ 57.6, or 2.43 seconds, approximately, for the idle movements. This time, if added to the time required for the longest single operation, will give the actual time required to complete one piece.

Setting-up the Davenport Automatic. — The method of setting-up and adjusting the Davenport multiple-spindle automatic screw machine illustrated in Fig. 10, Chapter III, will be explained by considering the method of procedure for making a $\frac{1}{4}$-inch machine screw. The successive order of the operations and the tools to be used should first be determined. In this case, the order of operations is indicated by the diagrams *A* to *E*, inclusive (Fig. 21) and the finished product is shown at *F*. The principal operation is that of rough-turning the body of the screw, and, in order to reduce the time per piece, two box-tools are used as indicated at *A* and *B*. The tool in the first spindle turns one-half of the required length, and then the remaining half is rough-turned by the other box-tool in the second spindle. When the first box-tool is at work, a forming tool on the cross-slide cuts away the metal on both sides of the screw-head, as the illustration indicates. The finishing cut is taken by a single box-tool in the third spindle (diagram *C*); this tool is given twice the feed of the roughing box-tools, so that the finishing cut will be completed in the same length of time required for the two roughing cuts. A die is next used to cut the thread, as indicated at *D*, and then the finished screw is severed from the bar of stock by the cutting-off tool, as shown at *E*. The end or point of the stock is also rounded by the cutting-off tool, preparatory to making the next successive screw.

Speed for Work-spindles. — The machine is geared so that the work-spindles will revolve at whatever speed is considered essential to economical production. For ordinary screw stock, a surface speed of about 100 feet per minute is considered a fair average for this machine. The material, in this case, is $\frac{7}{16}$-inch hexagonal steel (a special size for a $\frac{1}{4}$-inch screw), so that the surface speed may be based upon a diameter of $\frac{7}{16}$ inch. By referring to the table of spindle speeds and corresponding change-gears to use, it will be found that the spindle speed should be 840 revolutions per minute, which speed is obtained by equipping the machine with a driving gear having 28 teeth and a driven gear having 36 teeth. This speed of 840

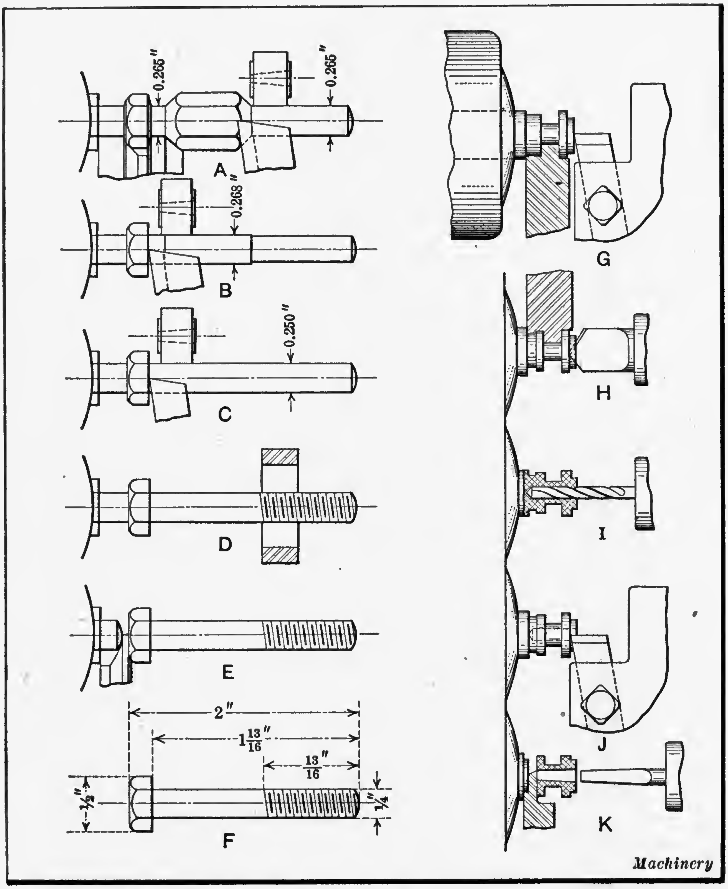

Fig. 21. Examples of Work done on Davenport Five-spindle Automatic

revolutions per minute will give a surface speed of approximately 100 feet per minute.

Number of Revolutions for Each Operation. — The next step is to determine the number of revolutions the spindles make for each of the operations. The number of revolutions which the spindles make for any given operation depends upon the feed of the tool per revolution and the length of the part to be turned; therefore, it is necessary to first decide what feeds are to be used. For rough-turning, the feed usually varies from 0.004 to 0.010 inch per revolution of the spindles and, in this case, it will be assumed that a feed of 0.0075 inch is to be used for roughing and twice that amount, or 0.015 inch, for the finishing cut, so that the box-tool which takes this finishing cut will traverse $1\frac{13}{16}$ inch or over the entire body of the screw, while each of the roughing tools is feeding $\frac{29}{32}$ inch or one-half the length of the screw body. By dividing the length of the turned surface by the feed per revolution, it will be found that approximately 121 revolutions are necessary, $(1.812 \div 0.015) = 121$, nearly. Adding two revolutions to allow for a little clearance, for indexing, between the ends of the tools and the stock, gives a total of 123 revolutions of the spindles.

After having determined the number of revolutions of the spindles for the longest operation, the machine is equipped with change-gears at *U*, Fig. 13, Chapter III, as indicated by a table accompanying the machine. Under the heading "Revolutions per Minute of Spindles" and in the column headed "840" (which represents the selected speed of spindles and revolutions per minute) will be found the figure 123 representing the number of spindle revolutions required for the forward feeding movement of the tools. Opposite 123, the necessary change-gears are listed and also the rate of production. These gears transmit motion to the camshafts. In this case, the gear on the driving shaft has 20 teeth and the gear on the driven shaft, 44 teeth. The time in seconds required to make one piece, which includes the time for withdrawing the tools and indexing, is 12 seconds per piece.

Selection of Cams. — Seventeen cams are furnished with the Davenport multiple-spindle automatic machine. Six of these cams are intended for turning operations, two for pointing the ends of the stock, four for threading operations, and five for forming and cutting-off operations. The rise or throw of the cams varies; for instance, among the cams used for turning, there is one having a rise of $\frac{7}{64}$ inch (used for centering and facing operations); another having a rise of $\frac{1}{2}$ inch; two others, a 1-inch rise, and two additional cams, a 2-inch rise. If the travel required for the tool differs from the rise or throw of the cam, the motion of the tool is varied by changing the position of the link connecting the cam lever with the tool spindle, as previously explained in Chaper III. When setting-up a machine, cams are selected for each operation which are nearest to the required size as to rise, but which have a rise, in every case, that is equal to or greater than the travel required for the tool. When these cams have been placed in position, the adjustable blocks at the upper ends of the cam levers are set so that each tool will travel the exact distance required on the work. After making these adjustments, the feed for most of the tools will be finer than those first selected, but, as the time for making a screw is governed by the longest operation, an increase in the number of revolutions that the spindles make during some of the shorter cuts simply means that these tools will, in most cases, leave a finer finish and will last longer, owing to the feed reduction.

Adjustments for Threading Operation. — The rise of the cam to use for operating the threading die spindle and the position of the link-block on the cam lever are shown by a table. This table shows what the rise of the cam should be for a given number of threads per inch, and also the position of the link-block on the cam lever. The figures denoting the cam rise and the graduation on the cam lever are listed under the required number of threads per inch to be cut, and opposite the number of turns which the work-spindle makes while a part is being machined. When the cam-lever block is correctly set, the die-holder will follow up the thread, although the clutch pins of the die-holder permit a slight axial movement, so that the die is free to follow the lead of the thread. When the die is running off of the thread, the spindle carrying the die-holder is moved in the opposite direction by the cam, and the die-holder is provided with a ratchet which catches on the first revolution after the threading clutch is shifted from the low-speed gear to the high-speed gear. No adjustment of the cam which controls the clutch of the threading spindle is required for any pitch, as the clutch is always shifted just after the die-cam has reached the highest point.

Record of Operations. — It is good practice, preparatory to setting-up the machine for producing a new part, to lay out the operations as shown in Fig. 21, and then record the order of the operations, the tools used, etc., so that the machine can readily be adjusted or set-up for reproducing the same part. Such data are also useful for comparative purposes, when estimating on other work which is similar in size and shape. The data recorded on page 194 apply to the operations shown by the diagrams *A* to *E*, Fig. 21. As will be seen, a standard box-tool set to turn to 0.265 inches in diameter is used for the first roughing cut. This tool is actuated by a cam having a rise of one inch. As the tool is to turn one-half of the length of the screw body, or $\frac{29}{32}$ inch, the block of the cam lever is set to the 0.9 division, thus reducing the amount that the tool travels. For the forming operation, which is performed by a tool in the cross-slide at the same spindle position, a $\frac{5}{32}$-inch cam is used, and, as the feeding movement of the tool is only $\frac{7}{64}$ inch, the cam-lever block is set at the 0.8 division. In a similar manner, the data for the other turning tools is recorded. Ordinarily, it is easier to make all the necessary calculations beforehand and then adjust the machine accordingly, than to attempt to set the machine as each calculation is made.

Turning a Trial Piece. — After the machine has been equipped with the necessary cams, chucks, etc., it is customary to put a single bar of stock in one spindle and adjust each tool, as the head is indexed to the different positions, so that all the tools have the correct movement in a lengthwise direction. These adjustments are made by means of the turnbuckles *G* which are shown in Fig. 11, Chapter III. After all of the tools in the end-working spindles, as well as those on the cross-slides and swinging arms, in case it is necessary to use the latter, are adjusted to approximately the correct position, the five bars of stock should be inserted in the machine spindles and the final adjustments made.

Order of Operations and General Data for Producing Screw shown at F, Fig. 21

Operations	Tools Used	Size of Cams, Inch	Feed of Tool, Inch	Feed per Revolution	Effective Revolutions	Location of Block
Turn to 0.265	Standard Box	1	$\frac{29}{32}$	0.0075	123	0.9
Form to 0.265	Forming	$\frac{5}{32}$	$\frac{7}{64}$	0.0008	123	0.8
Turn to 0.268	Standard Box	1	$\frac{29}{32}$	0.0075	123	0.9
Turn to 0.250	Standard Box	2	$1\frac{13}{16}$	0.015	123	0.9
Thread	Die and Holder	$1\frac{1}{2}$	$\frac{13}{16}$	—	123	0.86
Cut-off	Cut-off	$\frac{9}{32}$	0.174	0.0015	123	0.8

Surface speed, 100 feet per minute; spindle speed, 840 R.P.M.; gears, 28–36; seconds per piece, 12; feed gears, 20–44.

Regulation of Stock-feeding Movement. — The stock is always fed against a stop which forms a part of the box-tool or other tool in the first spindle or "position *A*," and the length to which the stock is fed out of the chuck is regulated by a screw at the rear end of that tool spindle. This screw is tapped into the spindle carrier, and the head of the screw engages a latch on the tool spindle and prevents the spindle from moving back farther than is necessary for the length of stock required. When it is desired to draw the tool spindle farther back, this latch attached to the rear end of the spindle is lifted. The turnbuckle for this spindle is adjusted for the position of the cutting tool independently of the stop-screw just referred to. The nut at the extreme left-hand end of the crankshaft should be adjusted to feed the stock about $\frac{1}{8}$ inch farther than is represented by the length of the finished piece, to insure a firm contact of the stock against the stop.

Use of Thread Spindle for Other Operations. — When the work does not require a threading operation and it is desired to use some other kind of tool in the threading spindle, one of the change-gears which rotates the threading-spindle driving shaft can be removed, and a square-head set-screw engaged with a tooth space of the intermediate gear through which the threading clutch gears are rotated. By locking the intermediate gear in this way, the clutch gear teeth will act as keys and prevent the threading spindle from turning around, but permit it to slide freely, so that it can be used for holding an end-working tool the same as any of the other spindles.

Independent Feeding Movement. — An example of work done on the Davenport multiple-spindle automatic machine is shown by the series of diagrams *G* to *K*, inclusive, in Fig. 21, which illustrate the advantages of a separate feed for each of the turret and cross-slide tools. The operations for the first spindle position are performed by a forming tool on the cross-slide and an end-facing tool. The tool-slide advances 0.010 inch for facing the end accurately and smoothly, and the forming tool rough-turns the work, leaving about 0.010 inch on the diameter and width of the groove for finishing. The next successive operation is indicated at *H*. The tool-slide advances 0.040 inch for centering the work, and it has a long dwell at the end of the feeding movement, thus insuring an accurate center. A forming tool also turns the part to the required diameter and the groove to the finished width. A stop-screw on the toolpost comes against a compensating stop for each spindle, to insure uniformity of diameters. At the next spindle position indicated at *I*, the tool-slide advances $\frac{7}{16}$ inch for drilling the hole. This drill is revolved rapidly by a drilling attachment driven by a round belt from the countershaft, so that the actual cutting speed is the speed of the work plus the speed of the drill spindle. The tool-slide next advances $\frac{1}{16}$

inch for finish-turning a shoulder as at *J*; this shoulder must be very accurate and it was roughed out by the cutting-off tool at the time that it severed the previously finished part. For the final operation shown at *K*, the tool-slide advances $\frac{3}{8}$ inch for reaming the hole. As but little metal is removed, the feed is rapid. When the operation is completed, the reamer is quickly withdrawn and the cutting-off tool, which has been at work in the meantime, severs the piece which drops from the bar.

CHAPTER VI

ATTACHMENTS FOR AUTOMATIC SCREW MACHINES

THE variety of work for which an automatic screw machine is applicable may be greatly increased by the addition of auxiliary attachments. Some of these attachments are designed to do work which could not be done with the ordinary tool equipment, thus enabling the machine to complete a series of operations and produce finished parts without a second operation upon another machine. Other attachments are designed for automatically feeding separate parts, such as castings or forgings, to the machine or for transferring pieces requiring a second operation to an attachment operating in conjunction with the machine. While screw machines made by different manufacturers are often equipped with attachments for doing the same class of work, these attachments usually vary considerably in their design, as they are constructed for application to a certain type of machine. Some of the more common attachments will be described.

Screw Slotting Attachments. — The screw slotting attachment is used for milling a screw-driver slot across the head of a screw, after the latter has been turned and threaded by the regular mechanism of the machine. One of these attachments is shown applied to a Brown & Sharpe machine in Fig. 1. This attachment is designed to take screws as they are cut off by the machine and to slot them automatically, thus eliminating a second operation in another machine and completing the screw in practically the same time that would be required to finish it without the slotting operation. The saw which does the slotting is mounted on a slide and is driven by a round belt from the overhead works. The arm *F* which transfers the screw from the machine spindle to the saw is actuated by a cam *K* through a lever connecting with rockshaft *C*. The screws are held in a bushing carried in a "floating holder" located at the end of the transfer arm *F*. This transfer arm is swung down so that the bushing is in line with the work in the main spindle, and the bushing engages the work before it is severed from the bar of stock. After the screw is cut off, the arm swings up to the position shown in the illustration. The rockshaft *C* is then fed longitudinally towards the slotting saw by means of the advancing cam *J* which imparts motion through lever *E*. When the slot in the screw-head has been cut and arm *F* drops back, the screw is removed from the bushing by the ejector K_1, which is simply a piece of sheet steel fastened to the attachment. The transfer arm *F* is accurately

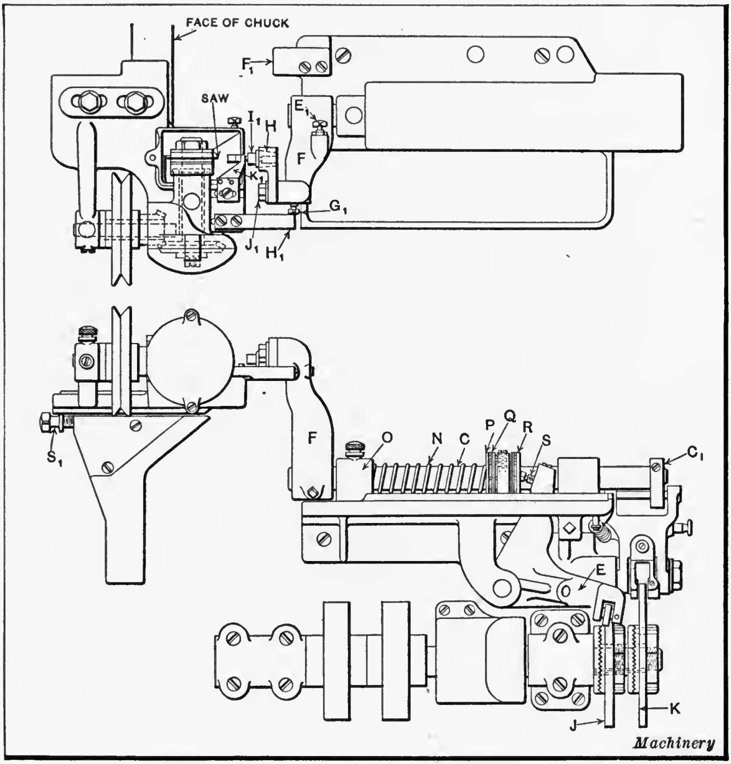

Fig. 1. Front Elevation and Plan of Screw-slotting Attachment for Brown & Sharpe Screw Machine

located with reference to the spindle by set-screw E_1, which engages block F_1, whereas the set-screw G_1 and block H_1 control the position of the arm with reference to the saw.

Slotting and Slabbing Attachment. — The attachment shown in position on the Cleveland automatic screw machine in Fig. 2 is used for slotting the heads of screws, slabbing operations, and similar work. The operation is done while the turret tool is working, so that no time is lost. The operation on a screw is as follows: After the part has been finished, and is ready to be cut off, the turret advances carrying the screw-slotting conveyor *A* which takes hold of the screw as it is severed from the bar. The stock is then fed forward and the turret tools begin on the next piece; at the same time, the conveyor *A*, carrying the screw that has just been cut off, brings the head into contact with the slotting saw *B*. By the time the turret tool has finished its cut, the saw has also completed its operation. The finished part is ejected from the conveyor by means of a pin *C*, upon the backward stroke of the turret. The slotting arm *D* carrying the saw *B* is a slight distance back from the face of the chuck hood, so that it clears all the turret tools, except when the conveyor *A*, carrying the screw, comes into line with it.

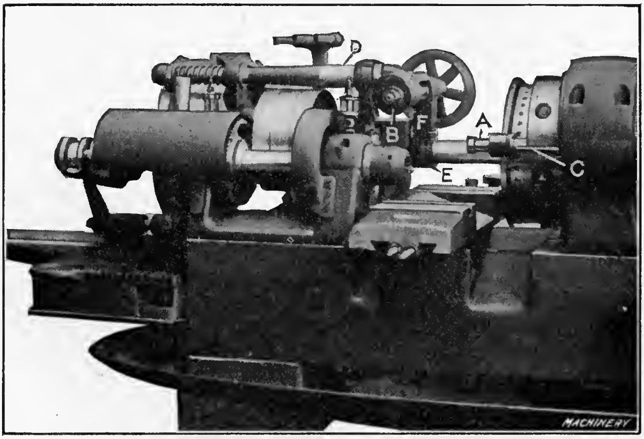

Fig. 2. Slotting and Slabbing Attachment on Cleveland Automatic

The saw spindle is driven by a belt from the countershaft. The drum which carries the chuck opening and closing cams has, in addition, another cam which operates the slotting arm *D*. This cam moves the saw toward the turret when the conveyor *A*, held in the turret, advances with the part to be slotted. The slotting arm is returned to its original or neutral position by the coil spring shown, after the roll on arm *D* comes out of contact with the operating cam.

To fit up this attachment for slabbing operations, two slabbing cutters are mounted on the saw spindle in the same manner as the slotting saw *B*, and the same movement takes place as in slotting. It is also possible by means of a special slotting arm *D* to cut a groove or slot of any shape or depth lengthwise of a piece by raising the center of the saw spindle, so that the work will pass under the milling cutter or saw.

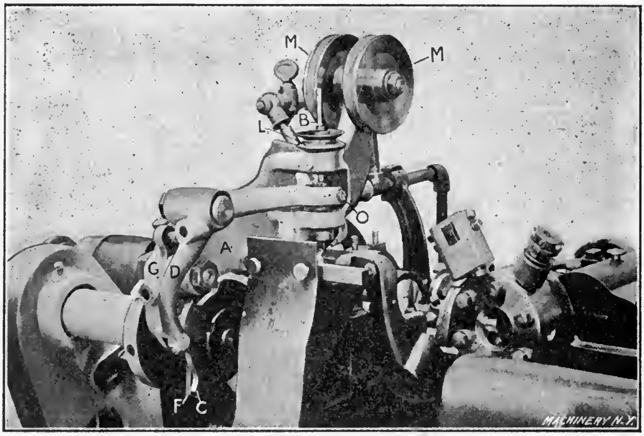

Fig. 3. Index Drilling Attachment on a Brown & Sharpe Automatic Screw Machine

Index Drilling Attachment. — The Brown & Sharpe index drilling attachment shown in Fig. 3 is designed to drill radial holes in such work as binding posts, capstan screws, studs, bushings, and similar pieces, which are made in the automatic screw machines. An adjustable swinging arm takes the pieces as they are severed from the bar and transfers them to the spindle of the drilling attachment where they are securely held in a spring chuck for drilling. The movements of the arm and mechanism that control the indexing, the operation of the spring chuck, and the movement of the drill are all governed by cams located on an auxiliary camshaft. The chain and sprocket drive for rotating this camshaft is shown encased at the left of the illustration. The drill spindle *B* is driven by a small round belt from the overhead works, which operates around the idler pulleys *M*. The drill spindle is operated by cam *C*, through lever *D*. The motion for indexing the work-spindle of the attachment is obtained from cam *F*. This indexing movement makes it possible to drill several accurately-spaced holes through the head of a screw or other part. One piece is drilled by the attachment while another is being made by the regular mechanism of the machine.

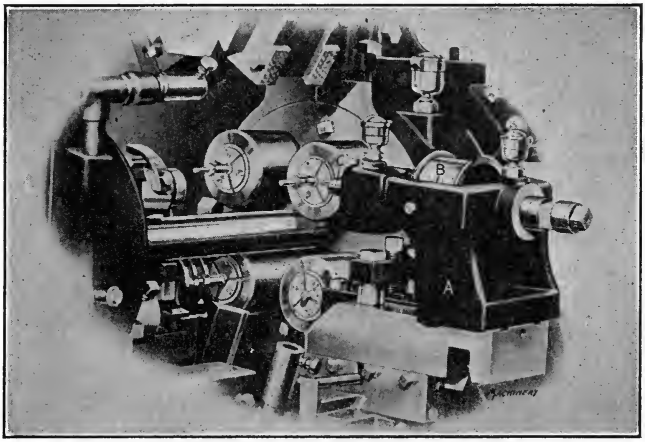

Fig. 4. Cross-drilling Attachment held on Cut-off Tool-slide of Acme Multiple-spindle Automatic

Cross-drilling Attachment. — When only a single hole is to be drilled cross-wise through the work, what is known as a *cross-drilling attachment* may be used. This is simpler in construction than the index drilling attachment (shown in Fig. 3) and is mounted on the cross-slide when applied to a Brown & Sharpe machine. The spindle is driven by a small belt from the overhead works, and the feeding movement for the drill is derived from the cross-slide itself. Before cross-drilling, it is necessary to stop the spindle and hold it rigidly. On Brown & Sharpe machines, a spindle brake is used.

One of the standard cross-drilling attachments used on the Acme multiple-spindle machine is shown in Fig. 4. This consists of a cast-iron frame *A* which is bolted to the top face of the cut-off tool-slide and works in the third position, where the work-spindle can be stopped. The cross-drilling and threading operations can usually be performed at the same time. The drive for this attachment is by a flat belt from a special overhead countershaft running on the pulley *B*, which is fastened to the spindle *C* that carries the drill. This attachment, by a slight modification in its construction, can be driven by gears and a universal-joint shaft from the main tool-slide.

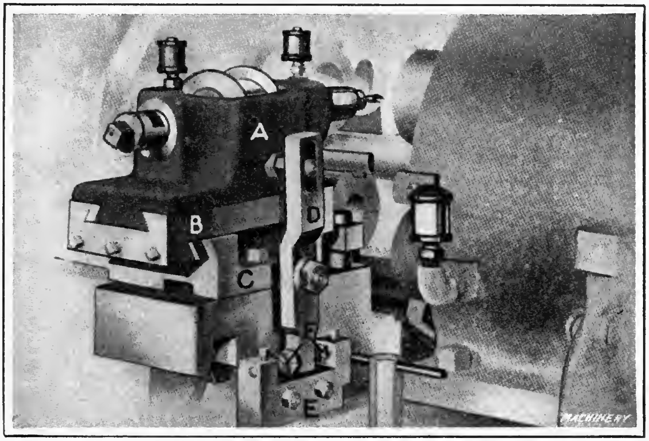

Fig. 5. Acme Cross-drilling Attachment with Accelerating Movement

Cross-drilling Attachment with Accelerating Movement. — Another Acme cross-drilling attachment, but one having an accelerating movement for increasing the travel of the drill, is shown in Fig. 5. The attachment *A* is similar in construction to that shown in Fig. 4, except that it is mounted on two slides *B* and *C*. Slide *C* is fastened to the top face of the cut-off tool-slide, and slide *B* fits over the former and is furnished with a gib to provide for adjustment. This enables the drilling attachment to be moved longitudinally along the base, facilitating adjustments for the drilling of holes at different distances from the face of the chuck. Attachment *A* is operated by a lever *D* which is fulcrumed to the lower slide *C*.

A block *E* provided with hardened adjustable stops *F* is fastened to the base in which the cut-off tool-slide works. This block, by means of its adjustable points, stops the lower portion of lever *D*, so that, instead of following the movement of the cut-off tool-slide when it is fed in, it transmits a movement to the lower arm of the lever and thus accelerates the travel of the drill-holder. The ratio between the arms of lever *D* is 1¾ to 1, thus making it possible to drill a hole clear through a piece. The regular travel of the cross-slide is only equal to a little over one-half the diameter of the bar, so that, when it is necessary to drill a hole entirely through the work,

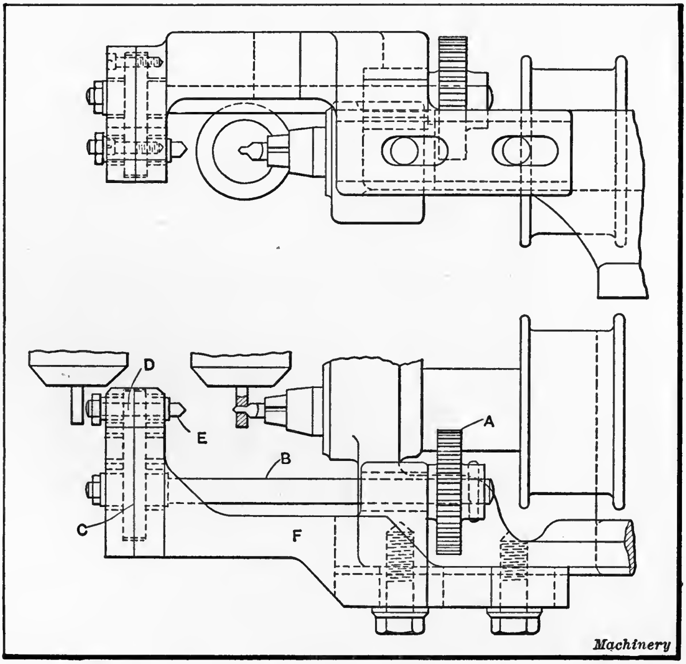

Fig. 6. Cross-drilling Attachment with Opposite Spindles

this attachment with accelerated movements can be used to very good advantage.

Cross-drilling Attachment with Opposite Spindles. — The Acme cross-drilling attachment shown in Fig. 6 is provided with opposite spindles and is adapted for drilling cross holes, and, in addition, counterboring or countersinking from both sides. It can also be used for drilling parallel holes of the same or different diameters at a given distance from each other and from the face of the chuck. The holes can either be drilled entirely through the work or to any distance desired. When necessary, the attachment can be provided with an accelerating device for increasing its travel. The second or auxiliary spindle of this attachment is driven by spur or bevel gears from the regular drill spindle. When driven by spur gears, the drive is through gear *A*, shaft *B*, and gears *C* and *D*. Gear *D* is keyed to the spindle in which the countersink *E* (or drill) is held. The bracket *F* carrying the auxiliary mechanism is bolted to the front side of the regular attachment used for cross-drilling.

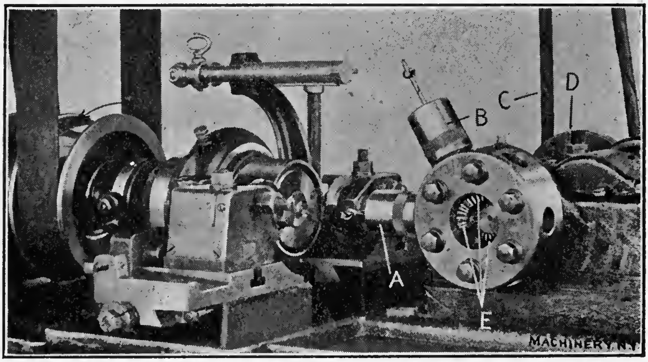

Fig. 7. Brown & Sharpe Automatic Screw Machine equipped with Turret Drilling Attachment

In operation, as the cylinder indexes, the stock comes between the spindles of the attachment, and the machine is so cammed that the cut-off tool-slide feeds forward, drills the first hole, and then pulls back far enough to bring the drill held in the opposite spindle into contact with the work. The slide then feeds forward again to an intermediate position, before the next indexing operation.

Turret Drilling Attachment. — The turret drilling attachment shown applied to a Brown & Sharpe machine in Fig. 7 is used to increase the speed of a drill relative to the work, without running the work-spindle faster. This is accomplished by rotating the drill in the opposite direction to the stock. This attachment is often used when making small studs and a variety of work requiring the use of one or more small drills which must be run at a much higher speed than is required for any other tool, in order to obtain an economical cutting speed. The attachment is driven from the overhead works by a belt *C* which rotates a spindle located at right angles to the spindle of the machine. This spindle, in turn, drives the drill spindles by means of bevel gears *G*. The illustration shows the turret equipped with two drill spindles *A* and *B*. The number may be varied to suit the work.

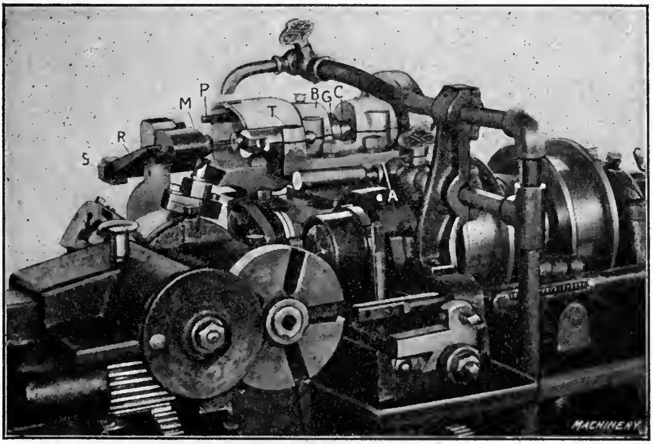

Fig. 8. Rear View of the Burring Attachment applied to Brown & Sharpe Automatic Screw Machine

Burring Attachment. — The burring attachment shown in Fig. 8 applied to a Brown & Sharpe machine carries a single tool for removing burrs or for performing light operations, such as drilling, counterboring, or facing on the cut-off ends of pieces before they leave the screw machine. The attachment has a work-spindle *C* which is driven from the overhead works by a small belt. The cutting tool is held in this spindle. A chuck encased at *M* attached to a swinging arm picks up the piece of work as it is severed from the bar and conveys it first to a device that clamps it securely in the chuck and then to the tool in the spindle of the attachment. The movements of the arm are controlled by two cams located on the end of the camshaft. The small collet chuck located inside of part *M* is opened by the engagement of a small pin which comes into contact with a stationary rod *P*. The work is then ejected from the chuck by means of a small plunger which engages finger *R* when the transfer arm drops back preparatory to receiving another piece.

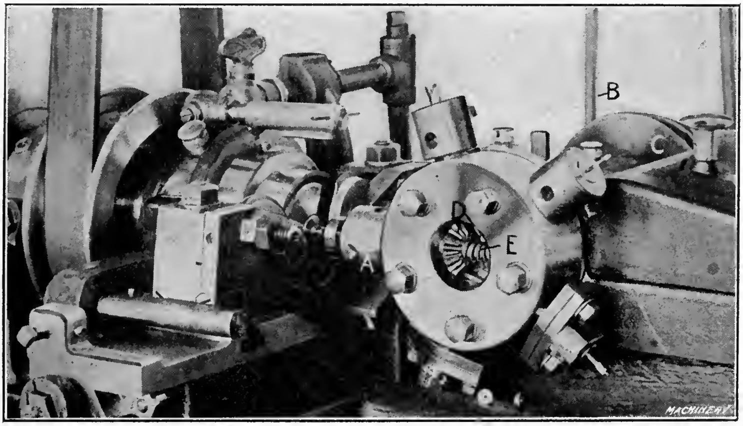

Fig. 9. Tap and Die Revolving Attachment

Tap and Die Revolving Attachment. — When a series of operations requires no other slow movement except the reduction of speed for a threading operation, the tap and die revolving attachment shown in Fig. 9 is used in connection with Brown & Sharpe machines. This attachment provides means for reducing the speed of the tap and die relative to the work, when threading, and of increasing the speed when removing a tap or die from the threaded part, without altering the speed of the work-spindle. This is effected by revolving the tap or die in the same direction as the spindle, but at a slower speed, the combination of the two speeds giving the desired result. The attachment is driven by a belt *B* from the countershaft through pulley *C* and bevel gears *D*. The spring *E* acts in the same manner as the spring in an ordinary draw-out die or tap-holder.

Accelerated Reaming Attachment. — For reaming holes which exceed in depth the travel of the end-working tool-slide, the accelerated reaming attachment shown in Fig. 10 is used on the Acme multiple-spindle machine. This attachment is held in the "fourth" end position in the tool-slide, and consists of the regular cast-iron collet *A* which fits in the hole in the tool-slide. The reamer holder *C* is a sliding fit in the steel bushing *B*, and is furnished with a loose cap *D* in which the reamer is held by the set-screw shown. The cap *D* is held to the holder *C* by two shoulder-head screws, the bodies of which are $\frac{1}{32}$ inch smaller in diameter than the holes in the cap, thus allowing the cap to "float" a slight amount. A stud *E* screwed into the shank of the holder *C* and working

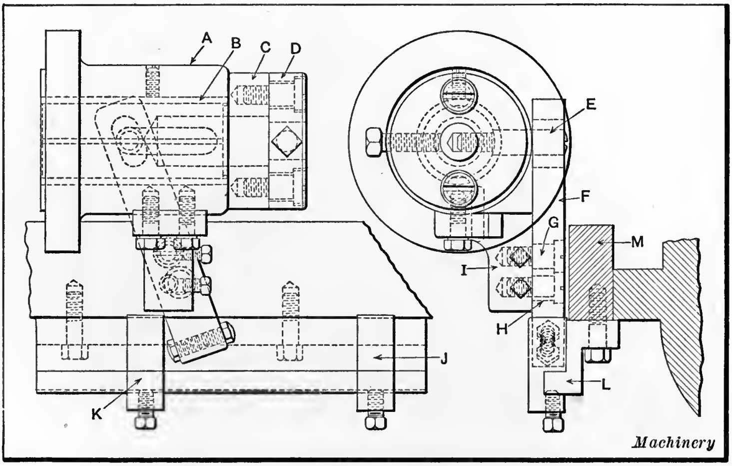

Fig. 10. Accelerated Reaming Attachment

in an elongated slot in the bushing and collet projects through from the under side of the collet and works in an elongated slot in the lever *F*. This lever is fulcrumed on a screw which is located in either holes *G* or *H*, depending upon the excess amount of travel required, and it serves to accelerate the travel of the reamer. In order to increase the travel, the screw is placed in hole *H*, and, to reduce the travel, the lever is moved back so that the screw would take the *G* position.

The bracket *I* in which the lever is fulcrumed is fastened to collet *A* and advances with the end-working tool-slide. The rear end of lever *F* is provided with two hardened screws rounded on the heads, which come in contact with the dogs *J* and *K* when the device is in operation. These dogs are adjustable on the bracket *L*, fastened to the gib *M*, which, in turn, is held to the bed of the machine. In operation, as the end-working tool-slide advances, the round-headed screw in the front face of the lever comes in contact with dog *J*, and, as the tool-slide continues to advance, this dog acts upon the fulcrumed lever, drawing out the reamer holder and accelerat-

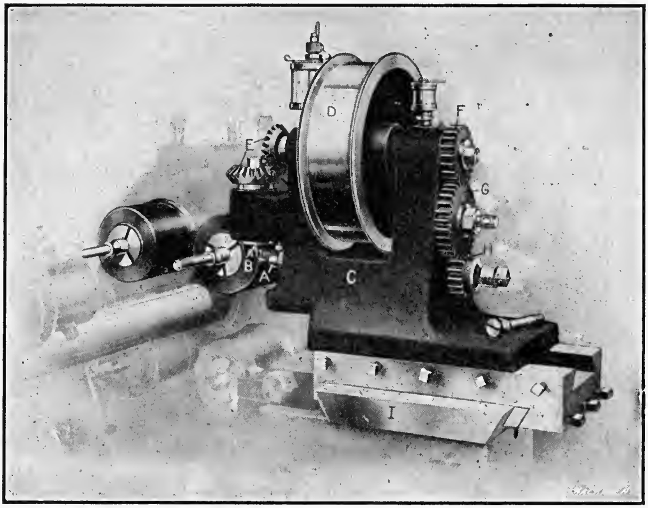

Fig. 11. Acme Cross-drilling and Milling Attachment with Spindles located at Right Angles

ing its movement. The position of dog *J* on the bracket, and also the location of the screw in holes *G* or *H*, determines the amount of excess movement given to the reamer. When the tool-slide drops back, dog *K* returns the reamer holder by means of lever *F* to its "back" position.

Drilling and Milling Attachment. — A two-spindle drilling and milling attachment in which the spindles are located at right angles to each other is shown in Fig. 11 applied to an Acme machine. This attachment is used for drilling a cross hole and milling a flat on the work. The casting *C* which carries the spindles *A* and *B* is fastened to the top face of the cut-off tool-slide, and carries a pulley *D* which is driven through a flat belt from a special overhead countershaft. Pulley *D* is keyed to the top horizontal shaft and drives the vertical milling spindle through bevel gears *E*. On the rear end of the top horizontal shaft is a spur gear *F* which, through the intermediate gear *G*, drives the spur gear *H* fastened to the drilling spindle *A*. This attachment is adjustable longitudinally on the base *I*, the latter being fastened to the top face of the cut-off tool-slide. The attachment can be provided with an accelerating movement, if desired.

Vertical-spindle Milling Attachments. — Fig. 12 illustrates an Acme vertical-spindle slab milling attachment, designed for carrying two face-milling cutters *A* and *B*. These cutters are held on the vertical spindle *C* and are separated by a spacing washer of the required thickness. The attachment is held on the top face of the cut-off tool-slide, and is arranged for milling two flats on a cold-rolled steel piece, which is turned out at the rate of fifty-three pieces per hour. The vertical spindle *C* is driven by bevel gears (enclosed in the guard *D*) and the pulley *E*, the latter being belted to a special countershaft. It is possible to drive this attachment without employing a special countershaft, by connecting it directly through a telescopic knuckle-joint shaft to the gears driving the threading spindle.

Another vertical-spindle slabbing attachment somewhat similar in construction to that just described is shown in

Fig. 13. In this case, however, two end-milling cutters *A* and *B* are used. The spindles carrying the end-mills are driven from a special countershaft belted to pulley *C*. This pulley is keyed to the shaft *D* which drives the vertical shaft *E* through bevel gears enclosed in guard *F*. On opposite ends of shaft *E* are held gears *G* and *H*, which mesh with gears on the vertical milling spindles. This attachment is fastened

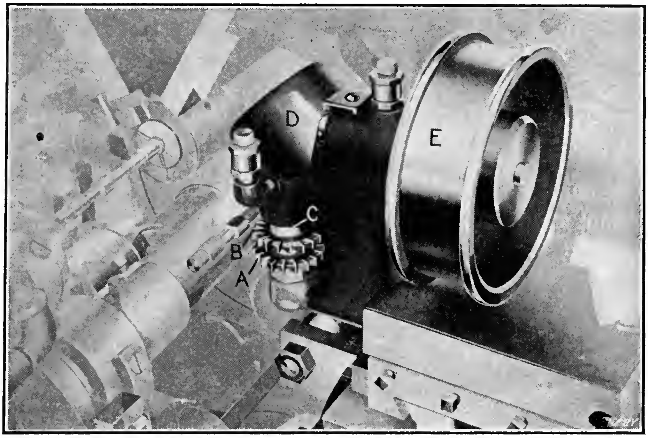

Fig. 12. Acme Slab Milling Attachment

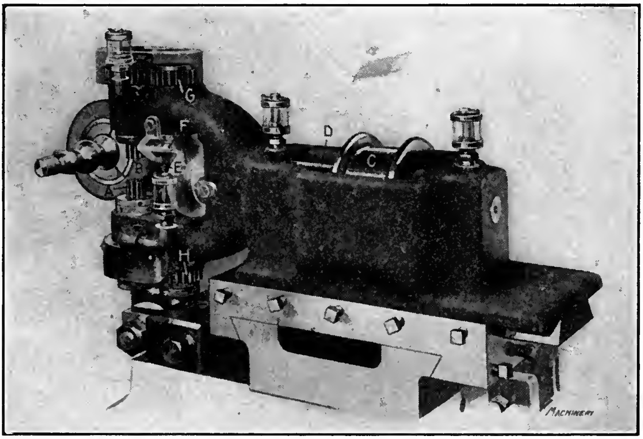

Fig. 13. Acme Slab Milling Attachment equipped with Two End-mills

to the top face of the cut-off tool-slide and is operated as previously described.

End-milling or Slotting Attachment. — Fig. 14 illustrates an Acme end-milling or slotting attachment which is held in the third position and driven by gears. The bevel gear *A* receives power from the regular gears that are provided for driving the tools held in the second position tool-spindle. The cutter is adjusted for depth by means of a special device on the rear end of the main tool-slide. This attachment is held rigidly, being tied to both second and third position tool-spindles. The work-spindle in the second position is stopped when the end-milling or slotting attachment is at work.

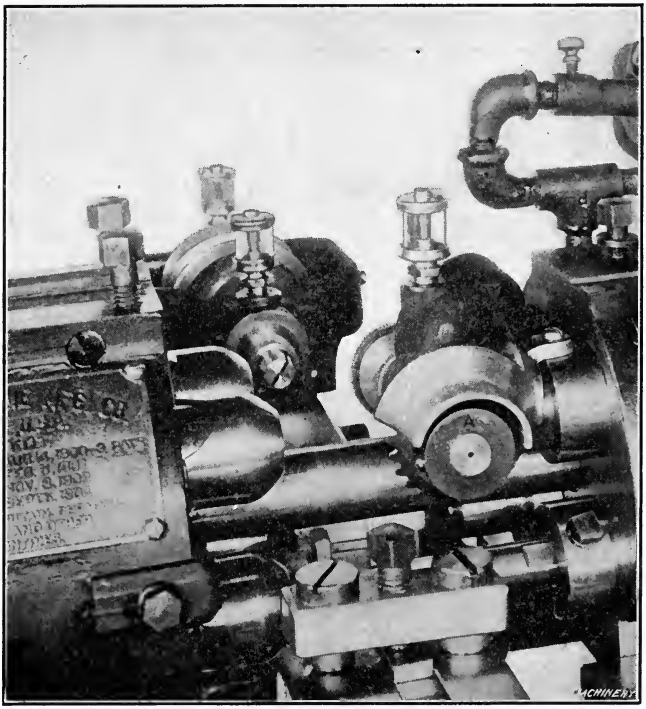

Fig. 14. Acme Slotting or Milling Attachment held in Third Position and Driven from Gears in Second Position Tool-spindle

Independent Cutting-off Attachment. — The attachment shown in Fig. 15 is used on Cleveland automatics for cutting off the work when the tools on the rear and front of the cross-slide are used for forming operations. This attachment consists primarily of a swinging arm *A* mounted on a stud which is attached to the spindle head of the machine. The cutting-off blade is mounted in a holder *B*, at the forward end of the swinging arm *A*; the holder *B* is fulcrumed on a bolt *C* which is provided with a locking nut on the opposite side for clamping the tool-holder in the desired position. The proper setting of the cutting-off blade is secured by means of the set-screws *D* which operate against a pin driven into the arm. To make this adjustment, it is necessary to release the nut on the clamping bolt *C*. This attachment is operated by the cam *G* held on the camshaft *F*, the cam being adjustably mounted on the disk *H*, as illustrated. This cam contacts with a roll held in arm *A* and gives it the required movement at the desired time. The roll is carried on an eccentric stud for fine adjustment of the cutting-off blade. The

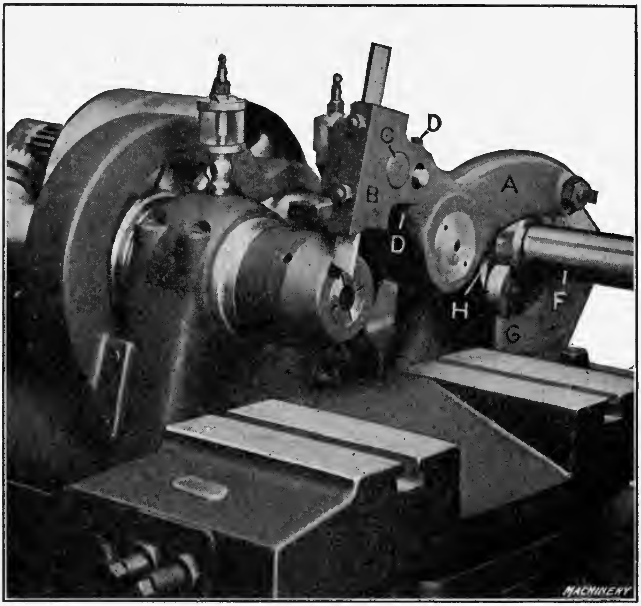

Fig. 15. Independent Cut-off Attachment on Cleveland Automatic

blade is clamped in the holder by two clamping bolts as illustrated.

Attachment for Forming Squares and Hexagons. — An attachment for automatic screw machines is shown in Fig. 16 which is used for cutting flat surfaces, such as squares and hexagons or other polygons, on work produced from a bar, directly in place, so as to save a second handling of the work after leaving the automatic machine. The attachment, as designed, is particularly intended to be applied to a four-spindle automatic screw machine, and provisions are included for driving a milling cutter of special design, by means of which flat surfaces are cut, and also for feeding this cutter past the revolving work. It should be understood that the work revolves while the flat surfaces are cut.

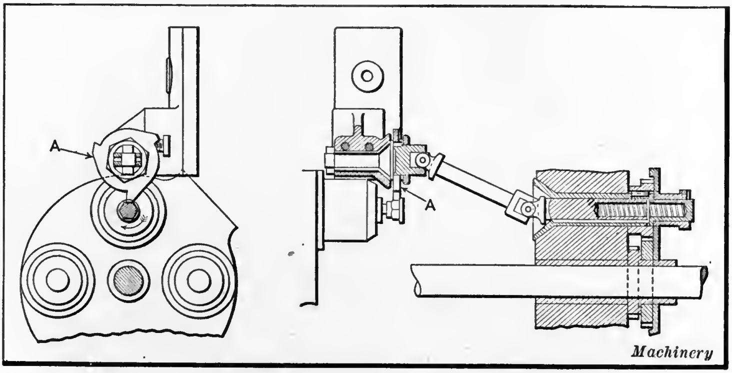

Fig. 16. Attachment for Milling Squares and Hexagons while Work is Revolving for Other Machining Operations

The attachment shown in the illustration is arranged for cutting a hexagon on the end of one of the bars in the machine, the cutting tool being the cutter *A*, provided with three teeth. This cutter is placed on a supplementary slide, mounted on the work-carrying head of the machine, and is fed by means of a leverage system adjustable to suit the requirements. When the device is in operation, the work and the cutter revolve in the same direction in relation to their axes, so that at the cutting point the directions of the surfaces which are in contact are opposite, but the cutter is geared to revolve at twice the speed of the work to be provided with the hexagon, and, as the cutter has three cutting points and revolves very rapidly, it produces a polygon with six equal sides when it has traversed the full width of the flat. If the cutter had only two points, a square would be produced. If a cutter having only one point were used, the gearing being the same, two flats only would be produced, and the remaining portion of the circular surface would remain curved. It is clear that the same results can be obtained by gearing of other ratios than 2 to 1, provided the number of teeth in the cutter is selected to suit the ratio of revolutions. The sectional view shows how the drive is transmitted to the cutter from the main drive of the machine.

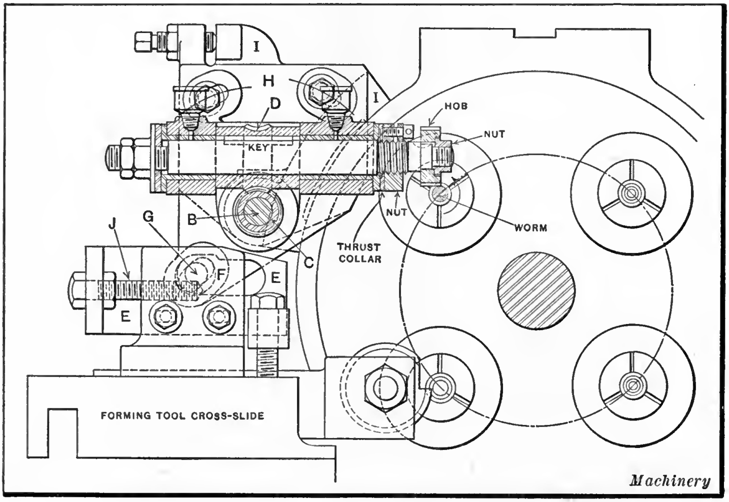

Fig. 17. Arrangement of Worm Hobbing Attachment on Automatic Screw Machine

When any devices are applied to automatic machines which in a certain sense belong outside of the original field of the machine, it is very important to take into consideration whether these devices require a stoppage of the regular functions of the machine, and thereby rob the machine itself of the efficiency of which it is capable, or whether these extra devices perform their work simultaneously with the performance of certain of the legitimate functions of the tool. In the former case, it is often doubtful whether the introduction of such devices is economical. Stopping an automatic machine for such operations as screw slotting, milling, etc., which prevent the continuous working of the machine, is sometimes questionable economy. On the other hand, if the devices are so designed that operations, which of necessity must be performed on the machine, can still be carried on while the device performs its own functions, then the introduction of such devices is of distinct advantage. With the device just described, the work is provided with its flat surfaces while it still continues its rotary motion, thus permitting other cutting tools to perform their functions without interference.

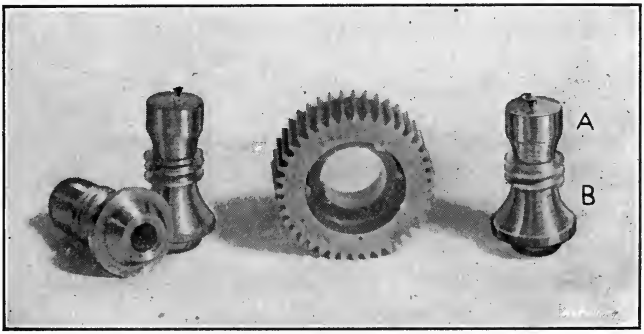

Fig. 18. Worm to be Hobbed, and the Hob

Attachment for Hobbing Worm and Spiral Gears. — An attachment applied to a National-Acme automatic screw machine for hobbing worm and spiral gears from blanks formed from bar stock is shown in Fig. 17. The design of the worm is such that it could not be handled by a circular hob fed longitudinally; therefore, a drop feed is used. By calculation, it was found that forty teeth would give a hob of the diameter that would clear the two high points on the worm blank, marked *A* and *B* in Fig. 18, and this number of teeth on the hob determines the entire gearing of the attachment. The worm being of the single-threaded type, and the hob used to produce it having forty teeth, it follows that the worm must make forty revolutions to one revolution of the hob. Now the chucking spindle holding the worm blank must make forty revolutions to one revolution of the hob, which is driven by an extra shaft geared to the center spindle of the machine at the back or pulley end. Having the ratio between the speed of the chucking spindle and the center spindle, which in this case is 29 to 36, the shaft *B* in Fig. 17 must revolve at the same speed as the chucking spindle. The 40 to 1 reduction is obtained through the worm on this shaft and the worm-wheel on the hob spindle. In Fig. 17, *D* shows the worm-wheel and *C* the worm keyed on the shaft *B*. On the No. 53 machine fitted up for this job, a 29-tooth pinion on the center spindle drives a 36-tooth gear on each chucking spindle. Therefore, a 29-tooth pinion is keyed on the center spindle on the back end of the machine and drives a 36-tooth gear on the shaft *B* with any idler between that conveniently meshes with the two gears.

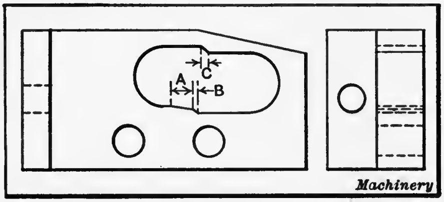

Fig. 19. Detail of the Feed Cam

This attachment is so designed that the hob starts hobbing the worm as soon as the forming tool begins to form the blank. Since the worm *C* and the worm-wheel *D* drive the hob at the required speed, and as their relative positions cannot be changed without altering the speed of the hob, it is evident that the center of the worm *C* must be the center about which the hob spindle oscillates. The worm can drive the worm-wheel *D* keyed on the hob spindle at the same speed in any position of the hob. The hob spindle is carried in bearings on an independent plate *H* which swings back and forth about the center of *C*, on the surface of the casting *I* that is bolted down on the screw-machine head. A cam *E* is mounted on the forming tool cross-slide to raise and lower the hob. An arm on the casting *H* has a roll *F* that fits in the cam *E*, and thus the raising of roll *F* by cam *E* lowers the hob, and *vice versa.*

Fig. 19 shows the cam *E* more clearly. From *B* to *A*, the cam lets the hob drop quickly down to the surface of the worm, and this drop occurs when the cross-slide of the machine moves in quickly until the forming tool starts to cut. This action of the cross-slide reduces the time required to feed in by sliding in quickly to the point where the forming tool begins to cut. The tool then has more time to feed in and do the forming at a slower feed, thus producing a more perfectly finished blank. For this reason, the cross-slide was selected to feed the hob on this attachment, and obtain the same action for the feed of the hob as for the feed of the forming tool. When the roller *F* has passed up the sharp incline *B*, the cross-slide is just beginning to feed in slowly and the hob is just touching the blank; then the roller starts up the incline *A* at a slow speed, thus feeding the hob down into the blank to the required depth at a very slow feed. No spring or weight is required to lift the hob out of the hobbed worm, as the cam *C* performs this function by lifting the hob high enough to clear the chucking spindle of the machine, which carries the hobbed worm, allowing it to swing around a quarter of a revolution to its next position for the drilling operation.

Not being certain of the accuracy of the scaled dimensions of positions of the parts of the machine and the outside diameter of the worm being subject to a change, the cam *E* (Fig. 17) was made adjustable. By sliding it in or out by means of the screw *J*, various diameters of a 0.098-inch lead single-threaded worm may be hobbed, providing that the variation does not amount to enough to change the spiral angle sufficiently to interfere with the angle of the teeth cut in the hob. However, considerable variation in the diameter of the worms to be hobbed can be taken care of. The face of the hob being flat and tangent to the worm, there is considerable clearance between the sides of the teeth on the hob and the sides of the threads on the worm in back of the cutting surface of the hob. This clearance increases as the curvature of the worm is farther from the toothed face of the hob. This is evident, in that the teeth become narrower at the top, and the space between becomes wider. The hob spindle is made adjustable to compensate for the re-grinding of the hob. By loosening the nuts on the back end of the spindle from the steel thrust collar, the clearance may be taken up by tightening the lock-nut on the hob end, thus pulling the spindle forward.

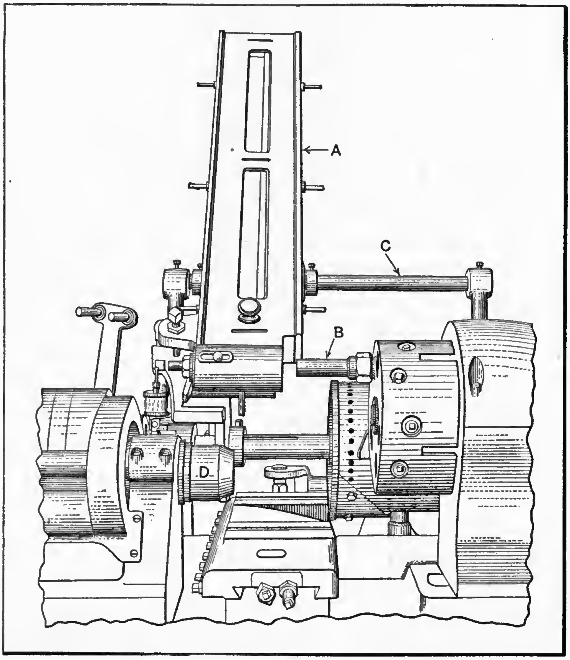

Fig. 20. Tilting Magazine Attachment

To make the generating hob, another hob is required to cut the teeth, this hob being similar to the one used in hobbing a worm-wheel. In fact, the relation between these two hobs is the same as between a worm and worm-wheel. This hob for producing the teeth in the generating hob used on the fixture is made to the same dimensions as the worm to be hobbed. It is thus evident that the generating hob will reproduce a worm of the same form of thread as that of the hob that produced the teeth in it. There is, however, a slight exception in this case, in that the hob takes a drop cut in the worm blank, thereby leaving a curve on the threaded length of worm with a radius equal to half the diameter of the hob — in other words, producing a worm somewhat of the Hindley form. No advantage in this shape of worm is gained, however, as the worm-wheel driven by the worm is much smaller in diameter than the generating hob.

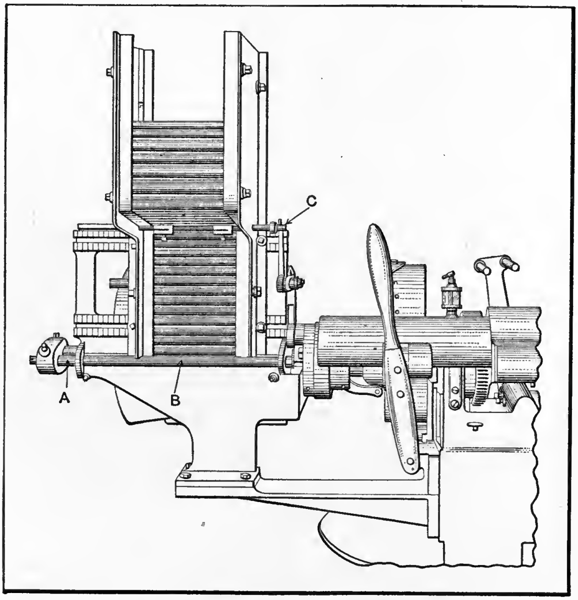

Fig. 21. Vertical Hopper Magazine

Magazine Feeding Attachments. — Magazines for handling work to be chucked automatically have developed along many lines, and a great number of ingenious devices have been designed which are adapted to the various shapes and kinds of work that are operated upon in automatic machines. The attachments shown in Figs. 20 to 23, inclusive, have been designed for the Cleveland automatics. What is known as a "tilting magazine attachment" is shown in Fig. 20. This attachment is designed for handling castings, drop-forgings, and other parts requiring a second operation. The magazine *A* is filled from the top, the parts being placed one upon the other. In the illustration, the magazine is shown tilted downward, so that the conveyor *B* is in a position to advance and secure one of these pieces. After a part is removed from the magazine by the conveyor, the magazine tilts upward about shaft *C*, so that it is out of the way of the turret tools; the conveyor is then brought into line with chuck *D* into which the part is deposited. The tools in the turret and those on the cross-slide then proceed to machine the part held in the chuck. (No tools are shown in this particular illustration.) The magazine frame is provided with adjustable strips and bushings to accommodate parts of different size. The finished pieces are automatically removed by an ejector inside of the machine spindle.

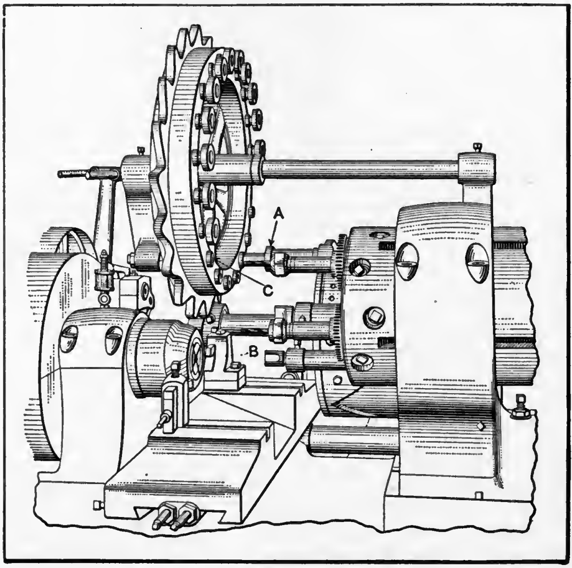

Fig. 22. Rotary Magazine Attachment

Vertical Magazines. — A vertical hopper magazine for feeding studs into the rear end of the spindle of a Cleveland automatic machine is shown in Fig. 21. This might be called a "reservoir magazine," as it has a widened upper portion for carrying a large number of parts. The work feeds by gravity into bushing *A*, and it is forced into the spindle by means of a push-rod *B*, which is operated from the cam-drum at the rear of the magazine. There is an agitator, which, by means of a cam-and-lever mechanism, oscillates the agitator shaft *C* which insures feeding the work from the hopper. The magazine holds from 300 to 1500 pieces, the number depending upon the diameter, and the entire frame is adjustable to suit any length within its capacity.

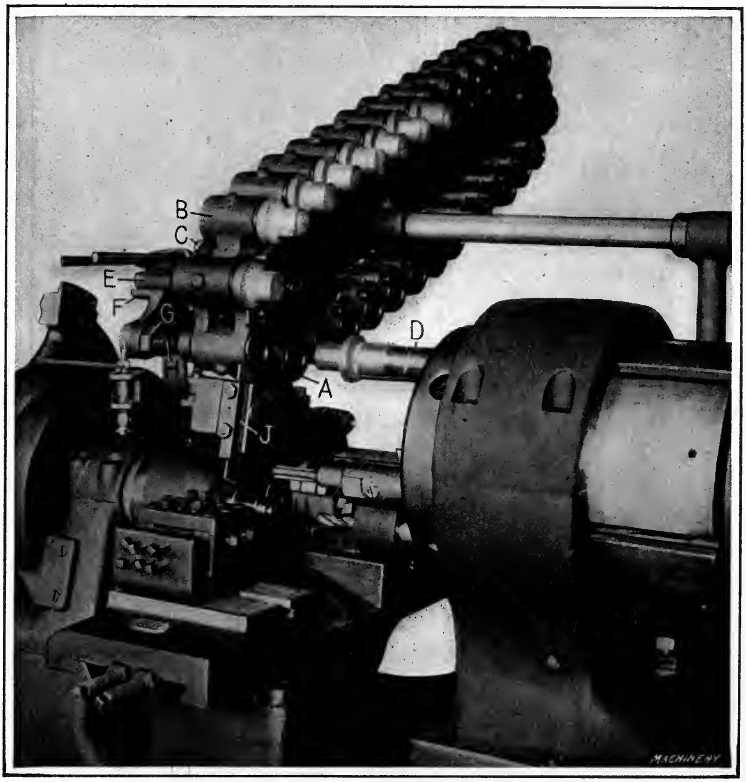

Fig. 23. Front View of Rotary Tilting Magazine

Rotary Magazine Attachment. — The rotary attachment shown in Fig. 22 is intended for irregular-shaped parts which cannot be fed through a tilting magazine. The pieces are placed by hand in the bushing *C* of the magazine. The illustration shows a piece of work *A* which has been removed from one of the bushings *C* when the turret was in its forward position; this part will be placed in the chuck when the turret is indexed so as to bring the turret into alignment with the spindle. The magazine is indexed by a dog on the camshaft *B* at the rear, this indexing movement occurring before the conveyor is in position to take another casting from the magazine; the latter is locked in position by a spring plunger after indexing. The work is removed from the chuck by an ejector after being finished.

Rotary Tilting Magazine. — The rotary type of tilting magazine, shown in Fig. 23, is used for second-operation work. The magazine tilts to the working position, as shown in the illustration, and, after the piece has been removed, it rises to clear the turret tools. In this respect, it is similar to the tilting magazine shown in Fig. 20, but differs from this design in that the parts to be machined are placed in the bushings *A* which are mounted in the links *B*. This arrangement permits of handling a greater variety of irregular shaped parts than was possible with the original form of magazine, where the parts were laid one upon the other and guided by parallel bars. The chain composed of the links *B* is indexed by means of the lower pair of sprocket wheels *C*, one of which is provided with a series of pins that engage an index pawl — not shown in the illustration. This pawl rotates the sprockets upon the downward tilt of the magazine and brings each link *B* in line with the conveyor *D* in the turret hole; upon the upward tilt, the pawl drops down and engages the pin following the one that has acted upon it. The sprocket shaft *E* rests in the saddle *F* on the main supporting arm *G*, which serves as a stop and also maintains the required alignment while the conveyor is removing the part to be machined. The adjustable stop *H* mounted on the main supporting arm prevents the conveyor straining the magazine while removing the work from the bushing.

The operation shown in Fig. 23 is the machining of cast-iron bushings having a collar or shoulder at one end. In this case, the part that is gripped in the chuck is cut off by the independent cutting-off attachment *J*. Occasionally, when the magazine is used for some odd-shaped piece that has surface enough to grip in the chuck, it is necessary to employ a simple form of latch held by a spring to keep the piece from falling out. This statement applies only to second-operation work and is referred to in order to show that the magazine may be employed for practically any shaped piece upon which a second operation must be performed. Aside from the tools required for different jobs, the only special equipment necessary is bushings of the required size.

CHAPTER VII

DESIGNING SCREW MACHINE CAMS

When an automatic screw machine is equipped with special cams for controlling the movements of the various tools and parts of the machine requiring a change of action, whenever a different class of work is to be produced, the designing of these cams constitutes an important part of screw machine practice.

As the preceding descriptions of different screw machines indicate, some types do not require special cams for producing different parts, but are so arranged that the necessary changes of feed for the tools, etc., are obtained either by adjustable cams forming a permanent part of the machine or by adjustments which vary the motion of cams that are a part of the regular equipment. When a machine is designed to use special cams, the advantages aimed at are the securing of the ideal conditions as to rates of feed for each operation, and the minimum time for idle movements; such cams enable the machine to duplicate readily the same part at any future time, the cams being marked and preserved for this purpose. The following description of the general method of procedure in designing cams applies especially to the Brown & Sharpe automatic screw machines, although a study of the principles involved will prove of value in connection with the design of cams for screw machines made by other manufacturers.

On the Brown & Sharpe automatic screw machines, three cams constitute a set. What is known as the "front-slide cam" operates the front cross-slide, the "back-slide cam" operates the back cross-slide, and the "lead cam" controls the movement of the turret slide. The motion for feeding the stock, revolving the turret, and reversing the spindle is taken from a rear driving shaft which runs at a constant speed. This shaft, through suitable change-gears, rotates the shafts upon which the cross-slide and turret operating cams are mounted, at a speed suitable for the work to be performed. The duration of the cycle of operations or the length of time required to make one piece is positively regulated by means of these change-gears. When designing cams, it is well to bear these essential points in mind.

Effect of Cutting Speed on Cam Design. — Before the cams are laid out, it is necessary to decide what types of tools are to be used and the successive order of the operations. Then the cutting speed for the material to be operated upon should be determined in order to ascertain the speed of the spindle. The tool movement that will be necessary in a given time in order to secure a certain rate of feed per revolution must also be determined. The rise of each cam lobe is then proportioned according to the number of revolutions which the spindle and work make while the tool controlled by that particular cam is taking its cut.

When turning parts from iron or steel, the formed tools will withstand a much higher speed than a tap or die, which should be taken advantage of in order to operate the machine as economically as possible. It is common practice to run the spindle backwards at a comparatively fast speed for the forming and cutting-off operations, and forward at a somewhat slower speed for thread cutting and other operations which can be performed to advantage at slower speeds; however, if the machine is to be used for a variety of work, or if hollow mills or box-tools are used principally, the correct speed for a die or tap can be obtained by means of an attachment which serves to revolve the die or tap in the same direction as the spindle, but at one-half the spindle speed. This tap and die revolving attachment is of especial value where the work requires no other slow movement except that for threading.

General Method of Designing Cams. — As the rise of each cam lobe is proportioned according to the number of revolutions made by the spindle while that part of the cam is in use, the relation between the spindle revolutions and the various operations is first determined. The total number of revolutions required to complete one piece is found by adding together the number of revolutions for each cut, the number for each indexing of the turret, for feeding the stock, etc.; an approximate number of revolutions may also be added for clearance. In determining the number of revolutions for each operation, it is necessary to decide what the feed should be in each case. Assuming, for instance, that a feed of 0.006 inch per revolution would be about right for rough turning, and that there is a length of 0.630 inch to turn, this operation would require about 105 revolutions of the spindle. If one-half second were necessary for indexing the turret, and the spindle speed is about 1100 revolutions per minute, approximately 9 revolutions of the spindle would be required for indexing; in actual practice, probably 12 or 13 revolutions would be allowed. In the same way, the number of revolutions for the finishing cut and also for the succeeding operations would be determined, the number required for indexing being added between each operation.

The time required for the complete operation is next determined by dividing the total number of revolutions by the number of revolutions which the spindle makes per second. Thus, if the estimated number of revolutions for machining the work is 406, and the spindle makes 18 revolutions per second, the time for completing the piece will equal $406 \div 18 = 23$ seconds, approximately. When the number of seconds for completing the work has been obtained, the revolutions required for each operation are converted into hundredths of the cam circumference, and the different lobes on the cam are proportioned according to the number of revolutions for each operation.

If the spindle revolves 18 times per second, and 23 seconds are required to make one piece, it will revolve 414 times for each part produced, which agrees closely with the approximate estimate; therefore, if the spindle revolves 414 times for machining each part, or for one revolution of the camshaft, each $\frac{1}{100}$ of the cam periphery represents $414 \div 100 = 4.14$ revolutions of the spindle. If 105 revolutions are required for rough-turning, that portion of the cam for operating the turret, when the rough-turning tool is in position, will extend over 105 ÷ 4.14 = 26 spaces, approximately, or $\frac{26}{100}$ of the circumference of the cam. This part of the cam circumference is then laid out so that it will impart the required movement to the tool.

In this way, the operation of the turret-slide and the cross-slides can be worked out in conjunction with one another, and the proper feeds for each operation can be determined in advance. One, two, or sometimes three pieces of work are completed in one revolution of the cam, so that the various movements of one of the slides in making a particular piece are laid out as curves around the cam; these curves either occupy the whole circumference or are repeated once or twice, according to the number of pieces produced per revolution.

Laying Out Cams for a Screw. — The method of laying out cams on the No. 00 Brown & Sharpe automatic screw machine, for producing the screw shown in Fig. 1, will be described. These screws are to be made from $\frac{7}{32}$-inch soft machinery steel stock. The tools used and the successive order of operations are as follows: 1. Rough-turn the body of the screw with a hollow mill. 2. Finish-turn the body of the screw with a box-tool. 3. Cut a thread on the end of the screw. 4. Cut off the finished screw and at the same time shave under the head and remove the burr with a forming tool.

For roughing cuts, a properly constructed hollow mill is recommended. Such a tool will cut easier if the cutting edges are inclined so that they form a slightly conical shoulder rather than one which is square. For finishing, the best results are usually obtained with a box-tool. Such a tool also has the advantage of a wide range of sizes and it can be equipped with two or more cutters for turning different diameters.

Speed of the Spindle. — The number of revolutions of the spindle required for the various operations will necessarily depend upon the kind of work to be done and the amount of stock to be removed. In this case, two spindle speeds will be employed in order to use a comparatively high speed for some of the operations. By referring to the spindle speed chart accompanying the No. oo machine, it will be found that a speed of 927 revolutions per minute with the spindle running forward and 1273 revolutions with the spindle running backward may be used to advantage for producing the screw shown in Fig. 1. The slower speed gives a surface speed of 30 feet per minute for cutting the thread and a surface speed of 53 feet per minute at the outside of the stock; 1273 revolutions per minute gives a surface speed at the outside of the stock of 73 feet per minute; therefore, the machine will be arranged so that the rough-turning, finish-turning, and thread cutting are done at the slower speed, and backing off the die, cutting off the finished screw, feeding the stock, etc., at the higher speed.

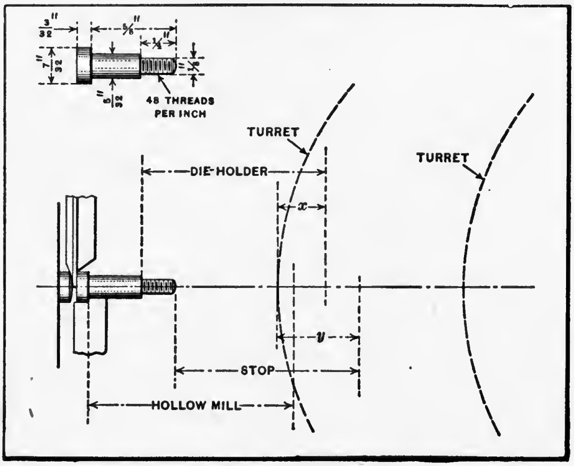

Fig. 1. Diagram illustrating Relation between Tool Lengths and Travel of Turret

Spindle Revolutions for Turning. — When different spindle speeds are used for the forward and backward directions of rotation, the total number of revolutions for producing the part should be based on the higher speed. In order to determine the total number of revolutions, it will be necessary to find out how many spindle revolutions are required for each operation, which, in the case of cutting tools, depends upon the amount they feed per revolution. As the turning is to be done at a comparatively slow speed, the feed may be rather coarse, 0.010 inch being selected for roughing and 0.011 inch for finishing. Rough-turning a length of 0.625 inch plus 0.010 inch for clearance, and with a feed of 0.010 inch per revolution, will require about 63 revolutions $(0.635 \div 0.010 = 63)$. The finishing cut with an advance movement of 0.635 inch at 0.011 inch per revolution, plus a dwell equivalent to three revolutions at the end of the cut for finishing the shoulder, will require about 61 revolutions. It will be assumed that both the roughing and the finishing cuts are to be taken in 62 revolutions.

Number of Revolutions for Thread Cutting. — To find the number of revolutions for cutting the thread, determine the number of threads on the end of the screw by multiplying the number of threads per inch by the threaded length; thus $48 \times 0.25 = 12$. Adding, say, two revolutions for clearance, 14 revolutions will be required for cutting the thread and 14 revolutions for backing the die off of the threaded end.

Revolutions for Cutting off Finished Screw. — In determining the number of revolutions for cutting off the finished screw, the question of feed is again involved. Cutting-off tools can be fed from 0.0012 to 0.0017 inch per revolution, but the feed should be reduced towards the latter part of the cut. Forming tools can be fed from 0.0002 to 0.001 inch, the amount largely depending upon the width of the formed part. It will be assumed that the feed in this case is to be 0.0015 inch. Now the total movement of the cutting-off tool equals the radius of stock, or $\frac{7}{64}$ inch + 0.005 inch for clearance + dimension x (see Fig. 2), which depends upon angle a of the cutting edge. The reason for inclining the cutting edge is to sever the finished part without leaving a teat or rough spot in the center of the screw-head, such as would usually be left by a tool having a cutting edge parallel with the axis of the work. The dimension x equals the width y of the blade multiplied by the tangent of angle a. Fifteen degrees has been proved to be a suitable angle for tools used on steel and iron, whereas, for brass or bronze, a somewhat greater angle, varying from about 20 to 25 degrees, gives better results. Assuming that the cutting-off tool is 0.035 inch wide and the angle of the cutting edge is 15 degrees, then x equals 0.010 inch. Therefore, the total movement of the tool equals $\frac{7}{64}$, or $0.1093 + 0.005 + 0.010 = 0.125$ inch approximately. The spindle revolutions required equal $0.125 \div 0.0015 = 83$ revolutions, approximately. (This number will be reduced to 81 revolutions in this particular case, for reasons to be explained later.) While the stock is being cut off, a forming tool can shave under the head and remove the burr, so that additional spindle revolutions are not required for this part of the work.

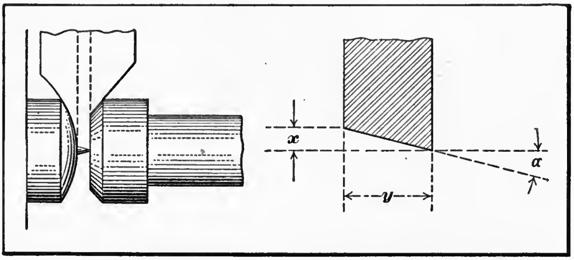

Fig. 2. Inclined Edge of Cutting-off Tool

Revolutions while Indexing Turret. — On the No. 00 Brown & Sharpe automatic screw machine, the time required for indexing the turret is one-half second. With a spindle speed of 927 revolutions per minute, there will be about 15.5 revolutions per second, or approximately 8 revolutions during the one-half second, for indexing. It is usually advisable to add from two to four revolutions to the actual number required for indexing the turret and feeding the stock; therefore, 10 revolutions should be allowed for indexing at the slower speed.

Spindle Revolutions based on Fast Speeds. — As previously mentioned, when there is a variation between the forward and backward spindle speeds, the number of revolutions for each operation which is considered in designing a cam is based upon the fast speed. In Table I, the various operations for producing the screw shown in Fig. 1, and the corresponding number of spindle revolutions in each case, are listed in the successive order. The column headed "Spindle Revolutions for Each Operation" shows the actual number of spindle revolutions for making one screw; the next column shows what the spindle revolutions would be if the spindle ran at 1273 revolutions per minute continually. On all operations for which the slower speed of 927 revolutions per minute is employed, the spindle revolutions based on the higher speed of 1273 revolutions per minute are used in proportioning the cam. For instance, 62 revolutions per minute are actually required for rough-turning with the hollow mill, but the hundredths of cam circumference used for this operation is based on 84 revolutions at the fast speed. The relation

Table I. Revolutions of Machine Spindle and Hundredths of Cam Circumference for Different Operations

	Successive Order of Operations	Spindle Revolutions for Each Operation	Spindle Revolutions Based on 1273 R. P. M.	Hundredths of Cam Circumference
Spindle speed, 927 R. P. M.	Index turret and reverse spindle	10	14	4
	Rough-turn with hollow mill	62	84	25
	Index turret	10	14	4
	Finish-turn with box-tool	62	84	25
	Index turret	10	14	4
	Run threading die on	14	20	6
Spindle speed, 1273 R. P. M.	Run threading die off	14	14	4
	Cut-off with back tool	81	81	24
	Shave under head and remove burr with form tool and index turret three times while cutting off			
	Feed stock to stop	14	14	4
	Total number of revolutions for making one screw	277*	339†	100

* Actual number of revolutions for making one screw.

† Number of revolutions required if spindle speed were 1273 R. P. M. continually.

between the spindle revolutions at the fast speed and the actual number at the slower speed corresponds to the relation between the spindle speeds; thus,

$$927 : 1273 :: 62 : x; \; x = \frac{1273 \times 62}{927} = 85 \text{ revolutions.}$$

The reason why 84 revolutions are listed in Table I instead of 85, and the reason for similar modifications will now be explained.

Modification of Spindle Revolutions to suit Change-gears. — After the number of spindle revolutions for each operation have been determined and they have been added together to obtain the total number, the next thing to consider is the relation between this total number and the numbers that can be obtained with the different combinations of change-gears accompanying the machine. As the total number of revolutions for producing a part does not always equal the number obtained with the change-gears, it is necessary to modify the revolutions for the different operations in order to obtain an exact number for which the change-gears are suited. In this case, the revolutions listed in Table I were changed slightly in order to obtain the total of 339, because Table II shows that this is the number for which the machine should be geared. For instance, instead of allowing 85 revolutions for rough-turning and finish-turning, 84 revolutions were allowed; the number of revolutions for cutting off was also reduced from 83 to 81, so that a total of 339 was obtained. The effect of these changes on the action of the tools is, of course, very slight, the effect being to change the feeding movement of the tool somewhat. As will be seen by referring to Table II, the number 339 is found in the column headed by the spindle speed of 1273 revolutions per minute, and, opposite 339 at the left-hand side of the table, the change-gears to use are listed. In this case, there should be a 30-tooth gear on the driving shaft and a 48-tooth gear on the worm-shaft. As 339 represents the total number of revolutions at the fast spindle speed required to make one piece, 339 ÷ 21.2 (the number of revo-

Table II. Change-gears and Data for Laying Out Cams, No. 00 Brown & Sharpe Automatic Screw Machine

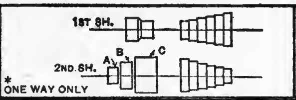

SPINDLE SPEEDS			
BELT ON	*A	*B	C
	420	792	1087
	492	927	1273
	576	1087	1492
	675	1273	1748
	792	1492	2048
	927	1748	2400

TIME IN SECONDS TO MAKE ONE PIECE.	GROSS PRODUCT IN TEN HOURS	NET PRODUCT IN TEN HOURS GROSS MINUS 10%	GEARS ON DRIVING SHAFT.	1ST GEAR ON STUD.	2ND GEAR ON STUD.	GEAR ON WORM SHAFT.	HUNDREDTHS OF CAM SURFACE TO FEED STOCK	SPINDLE SPEEDS MIN.	420	492	576	675	792	927	1087	1273	1492	1748	2048	2400
								SEC.	7	8.2	9.6	11.2	13.2	15.4	18.1	21.2	24.8	29.1	34.1	40.
								½ SEC.	3.5	4.1	4.8	5.6	6.6	7.7	9.1	10.6	12.4	14.6	17.1	20.
3	12000	10800	70			21	17	NUMBER OF REVOLUTIONS TO MAKE ONE PIECE.	21	25	29	34	40	46	54	64	75	87	102	120
4	9000	8100	50			20	13		28	33	38	45	53	62	72	85	99	117	137	160
5	7200	6400	60			30	10		35	41	48	56	66	77	91	106	124	146	171	200
6	6000	5400	50			30	9		42	49	58	67	79	93	109	127	149	175	205	240
7	5142	4600	60			42	8		49	57	67	79	92	108	127	149	174	204	239	280
8	4500	4000	60			48	7		56	66	77	90	106	124	145	170	199	233	273	320
9	4000	3600	60			54	6		63	74	86	101	119	139	163	191	224	262	307	360
10	3600	3200	40			40	5		70	82	96	112	132	154	181	212	249	291	341	400
11	3272	2900	40			44	5		77	90	106	124	145	170	199	233	274	320	375	440
12	3000	2700	40			48	5		84	98	115	135	158	185	217	255	298	350	410	480
13	2769	2400	40			52	4		91	107	125	146	172	201	236	276	323	379	444	520
14	2571	2300	30			42	4		98	115	134	157	185	216	254	297	348	408	478	560
15	2400	2100	40			60	4		105	123	144	169	198	232	272	318	373	437	512	600
16	2250	2000	30			48	4		112	131	154	180	211	247	290	339	398	466	546	640
17	2117	1900	20			34	3		119	139	163	191	224	263	308	361	423	495	580	680
18	2000	1800	30			54	3		126	148	173	202	238	278	326	382	448	524	614	720
19	1894	1700	20			38	3		133	156	182	214	251	294	344	403	472	554	649	760
20	1800	1600	20			40	3		140	164	192	225	264	309	362	424	497	583	683	800
21	1714	1500	20			42	3		147	172	202	236	277	324	380	446	522	612	717	840
22	1636	1450	20			44	3		154	180	211	247	290	340	399	467	547	641	751	880
23	1565	1400	20			46	3		161	189	221	259	304	355	417	488	572	670	785	920
24	1500	1350	20			48	3		168	197	230	270	317	371	435	509	597	699	819	960
25	1440	1300	20			50	3		175	205	240	281	330	386	453	530	622	728	853	1000
26	1384	1250	20			52	3		182	213	250	292	343	402	471	552	647	757	887	1040
27	1333	1200	20			54	3		189	221	259	304	356	417	489	573	671	787	922	1080
28	1285	1150	20			56	3		196	230	269	315	370	433	507	594	696	816	956	1120
29	1241	1100	20			58	3		203	238	278	326	383	448	525	615	721	845	990	1160
30	1200	1050	20			60	3		210	246	288	337	396	463	543	636	746	874	1024	1200
32	1125	1000	30	30	48	60	3		224	262	307	360	422	494	580	679	796	932	1092	1280
34	1050	950	20	44	50	60	3		238	279	326	383	449	525	616	721	846	990	1161	1360
36	1000	900	30	30	54	60	3		252	295	346	405	475	556	652	764	895	1049	1229	1440
38	947	850	20	30	38	60	3		266	312	365	428	502	587	688	806	945	1107	1297	1520
40	900	800	20	30	40	60	3		280	328	384	450	528	618	724	849	995	1165	1365	1600
42	857	775	20	30	42	60	3		294	344	403	473	554	649	761	891	1045	1224	1434	1680
44	818	725	20	30	44	60	3		308	361	422	495	581	680	797	934	1094	1282	1502	1760
46	782	700	20	30	46	60	3		322	377	442	518	607	711	833	976	1144	1340	1570	1840
48	750	675	20	30	48	60	3		336	394	461	540	634	742	870	1018	1194	1398	1638	1920
50	720	650	20	30	50	60	3		350	410	480	563	660	773	906	1061	1243	1457	1707	2000
52	692	620	20	30	52	60	3		364	426	499	585	686	803	942	1103	1293	1515	1775	2080
54	666	600	20	30	54	60	3		378	443	518	608	713	834	978	1146	1343	1573	1843	2160
56	642	575	20	30	56	60	3		392	459	538	630	739	865	1015	1188	1393	1631	1911	2240
58	620	550	20	30	58	60	3		406	476	557	653	766	896	1051	1231	1442	1690	1980	2320
60	600	525	30	21	54	70	3		420	492	576	675	792	927	1087	1273	1492	1748	2048	2400
63	571	500	30	20	54	70	3		441	517	605	709	832	973	1141	1337	1567	1835	2150	2520
70	514	450	20	20	40	70	3		490	574	672	788	924	1082	1268	1485	1741	2039	2389	2800
77	467	420	20	20	44	70	3		539	631	739	866	1016	1190	1395	1634	1915	2243	2628	3080
84	428	385	20	20	48	70	3		588	689	806	945	1109	1298	1522	1782	2089	2447	2867	3360
91	395	355	20	20	52	70	3		637	746	874	1024	1201	1406	1649	1931	2263	2651	3106	3640

The number of hundredths given is always sufficient for feeding stock, but it is usually best to add 1-100 for revolving the turret

lutions per second) = 16, which is the number of seconds required to make a piece.

Proportioning the Cam Circumference. — If the spindle revolves 339 times while making one screw or for one revolution of the camshaft, each $\frac{1}{100}$ of the cam periphery represents

339 ÷ 100 = 3.39 revolutions of the spindle. Then, if 14 revolutions are required for indexing, the part of the cam circumference controlling this indexing movement will extend over 14 ÷ 3.39 = approximately 4 spaces, each representing a hundredth of the cam circumference. Similarly, if 84 revolutions are required for rough-turning, the cam circumference needed for this operation will equal 84 ÷ 3.39 = 25 hundredths, approximately. In this way, the cam surface is divided in proportion to the number of spindle revolutions necessary for each operation, and it is advisable to list the results as shown in the column at the right-hand side of Table I.

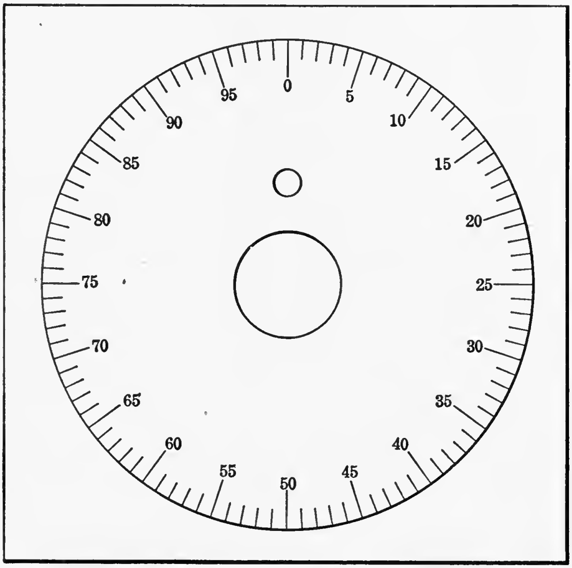

Fig. 3. Templet used for Laying Out Automatic Screw Machine Cams

The Cam Blanks. — The cam blanks used on the Brown & Sharpe machines are made from solid disks of mild cold-rolled steel. The blanks for lead cams are $4\frac{1}{2}$ inches in diameter for throws less than one inch, and 5 inches in diameter for throws over one inch. The blanks for the cross-slide cams are $4\frac{1}{2}$ inches in diameter. Each cam has a hole $\frac{1}{4}$ inch in diameter and $\frac{15}{16}$ inch from the center, which is used for locating the cam on its shaft. This hole also serves as a zero point from which all the divisions are started when laying out the cam.

Laying Out the Cam. — Laying out a cam involves, first, dividing the circumference into spaces which are proportional to the number of spindle revolutions for each operation, and, second, in giving each cam division or lobe a curvature, which will impart the required motion to the cutting tool controlled by each division. In order to readily locate these lobes or divisions, the cam circle is divided into one hundred equal parts, and, after having determined the hundredths of cam circumference needed for each operation, the division points are marked off accordingly. For locating these division points, a bristol-board templet of the same diameter as the cam blank and divided into one hundred equal spaces, as shown in Fig. 3, will make it unnecessary to space each cam circle separately. The holes in the templet correspond to those in the cam blank and facilitate setting the templet in the correct position.

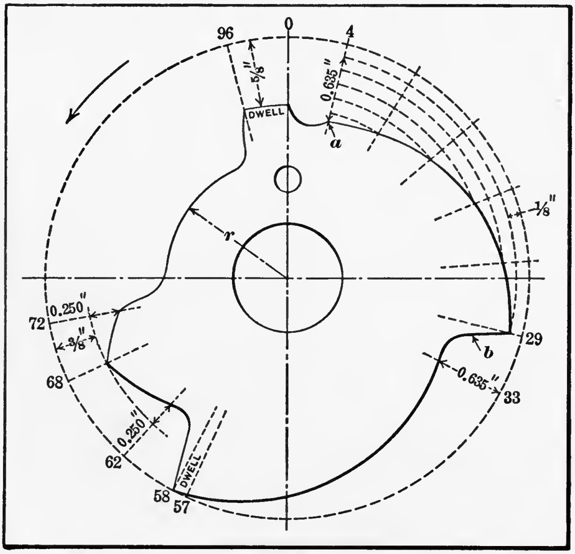

Fig. 4. Cam for Controlling Movements of Turret-slide

Laying Out the Lead Cam. — The lead cam for producing the screw shown in Fig. 1 is illustrated in Fig. 4. When laying out this lead cam, begin at a point on its circumference opposite the $\frac{1}{4}$-inch hole, the zero line being established at this point. The cam should be laid out to use, as nearly as possible, the entire circumference. That part of the lead cam which is not used is cut down to a radius r of $1\frac{1}{8}$ inch. The contour of the lead cam or the shape of its outline is governed by three factors: 1. The circumferential space to be allowed; 2. The movement to be imparted to the cam lever and tool; 3. The distance that the tool projects from the front side of the turret. On the No. 00 Brown & Sharpe machine, when the roll on the lever of the lead cam is at the highest part of the cam, the distance from the front side of the turret to the chuck is $1\frac{5}{8}$ inch, and the maximum distance between the chuck and turret is 3 inches, the two positions being indicated in Fig. 1 by the dotted arcs. In many cases, the tool projects so far from the turret that the cam lobe controlling its movement must be laid out so that it does not extend outward to the full diameter of the cam blank. In other words, the cam lobe is so located with relation to the center of the cam that the tool in the turret will operate at the required distance from the chuck.

To determine the radial distance of a cam lobe from the center of the blank, locate on a center-line the nearest and farthest positions of the turret with relation to the spindle chuck, as shown in Fig. 1, and also the location of the part to be produced. Then measure the distance from the outward cutting edge of the turning tool (in this case, a hollow mill for the roughing cut), when the tool is pushed back in the turret against its shoulder. After adding about $\frac{1}{8}$ inch to this dimension to allow for clearance and adjustment of the tool, lay off the dimension from the point where the tool ends its cut, towards the line representing the forward turret position. As shown in the illustration, the dimension marked "Hollow Mill" extends about $\frac{1}{8}$ inch beyond the face of the turret when the latter is in its extreme forward position; therefore, the cam lobe for operating this tool should be laid out so that its highest point is at least $\frac{1}{8}$ inch from the full diameter of the cam blank.

Cam Lobe for Roughing Cut. — In producing the screw shown in Fig. 1, the stock is first fed against a stop in the turret and then the latter is indexed. This indexing, as previously determined and recorded in Table I, requires 4 hundredths of the cam circumference; beginning then with a zero line passing through the $\frac{1}{4}$-inch pin-hole in the cam blank and using the templet shown in Fig. 3, four spaces or hundredths are laid out on the circumference; a radial line marked 4 should then be drawn through this point. As 25 hundredths of the cam circumference is required for the roughing cut, another radial line is drawn 29 hundredths from the zero line. The spiral cam lobe for the roughing cut is then laid off between these two lines, the curve starting on radial line 4 and ending on line 29. Now it was found by means of Fig. 1 that, owing to the length of the hollow mill and its holder, the highest part of this cam lobe should not extend to the outer edge of the cam blank closer than $\frac{1}{8}$ inch; therefore, the starting point of the curve at *a* is a radial distance in from the edge of the blank, equal to the travel of the tool plus $\frac{1}{8}$ inch. As the tool is to have a uniform feeding movement, the cam lobe is laid off in the form of a spiral, or so that it has a uniform rise from the cam center. The way in which this curve is obtained is indicated by the illustration. The space between the radial lines 4 and 29 is divided into several equal divisions by additional radial lines. A corresponding number of equally-spaced divisions are then laid off on line 0.635, representing the rise of the cam, by means of circular arcs. The points of intersection between the inner arc and the first radial line, the next successive arc and the second radial line, etc., lie along the cam curve, which is drawn through these points.

Withdrawal of Turret for Indexing. — With the No. 00 machine, one-half second is required for the indexing movement and, as previously determined, 4 hundredths of the cam circumference should be employed; therefore, a radial line

4 hundredths from line 29 is located and marked 33, which represents the number of hundredths from the zero position. The inclination of the "line of drop" *b* depends upon the speed at which the cam is to rotate. In this case, 16 seconds are required to make one screw, so that the cam makes one complete turn in that length of time. On this machine, if a part is produced within from 6 to 35 seconds, the line of drop may be tangent to the one-inch hole in the center of the cam blank. Cams which rotate faster require an easier line of drop or one which is not so abrupt, while cams which revolve at a comparatively slow speed, as, for instance, those for a period of 35 seconds or over, may have a line of drop which is radial. Templets such as are shown in Fig. 7 are convenient to use for constructing both the rise and drop on cams. These templets have several lobes representing the rise and drop for different cam speeds which are plainly stamped on the templet. After drawing a line *b* (Fig. 4) tangent to the one-inch hole, describe an arc equal to the radius of the cam roll. This arc should be tangent with line *b* and located radially so that it connects with the starting point of the next cam curve.

Cam Lobe for the Finishing Cut. — A box-tool is to be used for the finishing cut, which does not project from the turret as far as the hollow mill, so that the cam lobe in this case may extend to the outer edge of the cam blank. As 25 hundredths of the cam circumference are required, radial line 58 is drawn $(33 + 25 = 58)$. The feeding movement of the tool occurs between lines 33 and 57 and then there is a dwell of 1 hundredth, which allows the tool to remain stationary for a moment at the end of its cut, in order to finish the shoulder or under side of the screw-head. The curve for this part of the cam lobe begins at a point 0.635 inch in from the edge of the cam blank on line 33, as this dimension represents the advanced movement of the tool. The curve between lines 33 and 57 is laid out the same as for the cam lobe between lines 4 and 29.

Cam Lobe for Threading. — The drop for allowing the turret to withdraw preparatory to indexing is laid off between lines 58 and 62, the same as previously described for the drop between lines 29 and 33, and then the cam lobe for controlling the movements of the threading die is constructed. This lobe is given a rise which is slightly less than the travel of the die, so that the latter will be free to follow the pitch of the thread. In order to allow this freedom of movement, the die-holder is so constructed that the die is prevented from rotating with the work, but is free to move in the direction of its axis. The actual rise of the threading lobe or cam equals the number of spindle revolutions required for threading, divided by the number of threads per inch, minus from 10 to 15 per cent (depending upon the pitch of the thread) to allow the turret to lag behind the die slightly. In this case, there are 48 threads per inch and 14 spindle revolutions are needed for the operation, two being allowed for clearance; therefore, the rise not allowing for a reduction equals $14 \div 48 = 0.292$ inch. This rise is next reduced, say, 15 per cent or to 0.250 inch, and the lobe is laid out between radial lines 62 and 68, as 6 hundredths are required for running the die onto the work. The threading lobe is then given a drop of 0.250 inch, covering 4 hundredths more of the cam circumference. The exact method of laying out the curve of a threading lobe will be described later.

The radial position of this threading lobe must also be determined so that the die movement will be in the required position relative to the work. The height of the threading lobe may be determined by the same method previously described in connection with Fig. 1 for the hollow mill. The distance that the face of the die-holder projects beyond the turret is measured and, after allowing a slight amount for clearance, this distance is laid off on the center-line from the point where the thread ends, as indicated by the dimension marked "Die-holder." If the die-holder projects $1\frac{1}{4}$ inch from the turret and $\frac{3}{16}$ inch is allowed for clearance, the dimension x, or $\frac{3}{8}$ inch, will represent the radial distance from the outer edge of the cam blank to the top of the threading lobe.

Unused Part of Lead Cam. — After the threading operation is completed (see Table I), the cutting-off and forming tools come into action and the turret is not required until the finished part has been severed and the stock is fed forward against the stop in the turret for producing a new piece. That part of the lead cam which is not used should be reduced to a radius *r* of $1\frac{1}{8}$ inch. This concentric part of the cam is connected with the radial lines 72 and 96 by a suitable drop and rise. While the lead lever is passing this reduced part of the cam surface, and the cross-slide tools are at work, the turret is indexed three times, thus skipping the two holes which do not contain tools and bringing the stock stop around into alignment with the spindle.

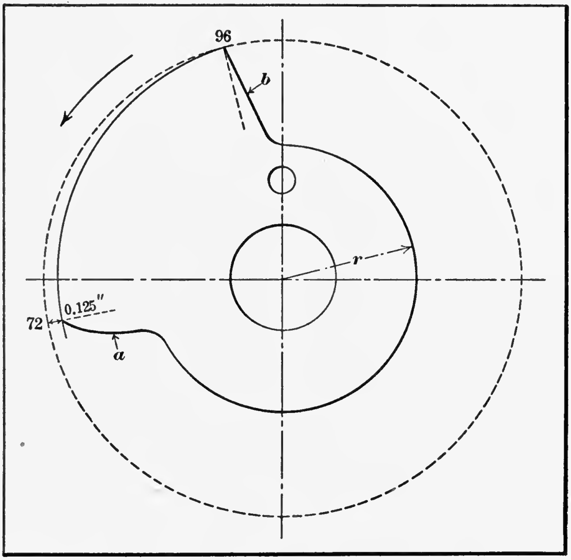

Fig. 5. Rear Cross-slide Cam

Lobe for Stock Stop. — The lobe for the stock stop is located between the lines 96 and 0, since 4 hundredths of the cam circumference are required, as shown by Table I. This lobe is a "dwell," which means that it is concentric and holds the turret stationary while the lead lever is passing over it. The height of this lobe is determined by measuring the distance that the stock stop projects from the turret, and laying off this distance as indicated by the line marked "Stop" in Fig. 1. If the stop projects $1\frac{7}{16}$ inch and dimension *y* is $\frac{5}{8}$

inch, then the concentric surface of the cam lobe should be $\frac{5}{8}$ inch in from the outer edge of the blank, as shown in Fig. 4.

After laying out an arc between the zero line and radial line 4, having a radius equal to the radius of the cam roll, the lay-out of the cam is completed. As the lead lever is passing the space between lines 0 and 4, the turret is indexed to bring the hollow mill into position for rough-turning the next piece, and, at the same time, the spindle rotation is reversed and reduced to the slower speed used for the turning and thread-cutting operations.

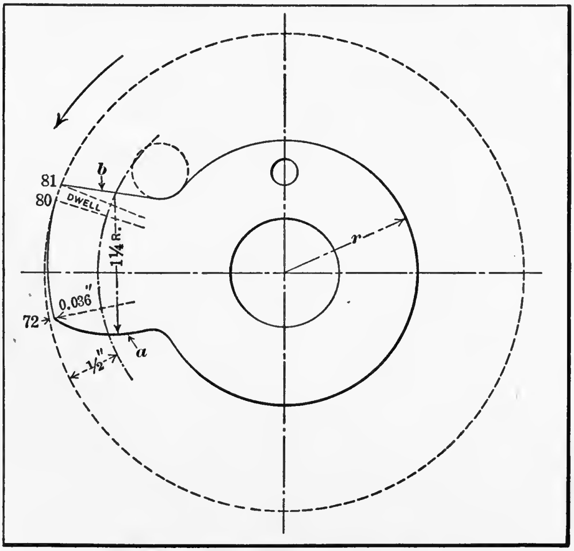

Fig. 6. Front Cross-slide Cam

Laying Out the Back-slide Cam. — The back-slide cam, or the one for operating the rear cross-slide, is illustrated in Fig. 5. As shown by Table I, the total movement of the cutting-off tool equals 0.125 inch, which equals the rise of the cam lobe between the radial lines 72 and 96. The cutting-off tool starts at line 72 or as soon as the die has been backed off of the work, as indicated by line 72 of the lead cam (see Fig. 4). The quick rise *a* of the back-slide cam is given a radius of $1\frac{1}{4}$ inch, drawn from a center one-half inch from the outside, whereas the drop line *b* is tangent to the one-inch hole in the center. These two lines *a* and *b* are connected to the concentric part of the cam by curves having a radius of $\frac{1}{4}$ inch which corresponds to the radius of the cam-lever roll. As previously explained, the quick rise and the drop varies for different speeds and may be laid out directly from a templet similar to the one shown in Fig. 7, which is used on the Nos. 00 and 00G Brown & Sharpe automatic screw machines. The back-slide cam lobe ends at line 96, 24 hundredths of the circumference being utilized in connection with the cutting-off operation. The 4 hundredths remaining between lines 96 and 0 represent the time allowed for feeding the stock. That part of the front- and back-slide cams which is not used is laid out to a radius *r* of $1\frac{1}{4}$ inch.

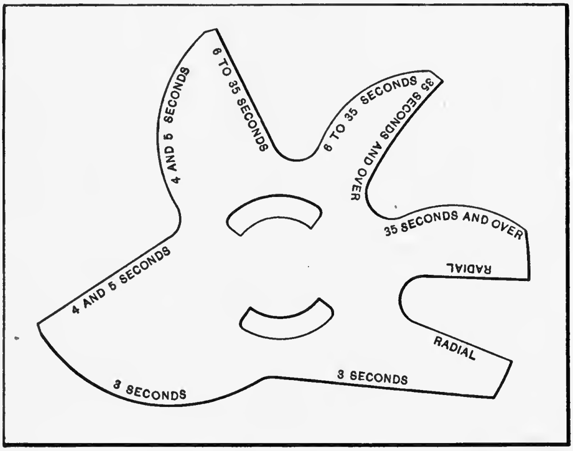

Fig. 7. Templet for Rise and Drop of Cams used on Nos. 00 and 00G Brown & Sharpe Automatic Screw Machines

Laying Out the Front-slide Cam. — While the cutting-off tool is at work, a forming tool is used to shave under the head of the screw and remove the slight burr left by the cutting-off tool. The movement required for the forming tool is equal to the difference between the radius of the screw-head and the radius of the body, plus, say, 0.005 inch for clearance, giving a total movement of 0.036 inch. Assuming that the feed of the tool is to be 0.0013 inch, the required number of spindle revolutions will equal 0.036 ÷ 0.0013 = 27.7. As each one hundredth of the cam circumference is equivalent to 3.39 spindle revolutions, 8 hundredths of the front-slide cam circumference is utilized (27.7 ÷ 3.39 = 8, approximately). The quick rise *a* (Fig. 6) and the drop *b* are laid off as previously described in connection with the back-slide cam. The forming tool begins work at line 72, which corresponds with the point at which the cutting-off tool comes into action, these two tools operating simultaneously. After the forming tool has been moved inward 0.036 inch, it is allowed a dwell of one hundredth of the cam circumference, so that the tool can remove the burr caused by the cutting-off tool when starting in. The remainder of the cam is made to a radius of $1\frac{1}{4}$ inch, since this part is not used.

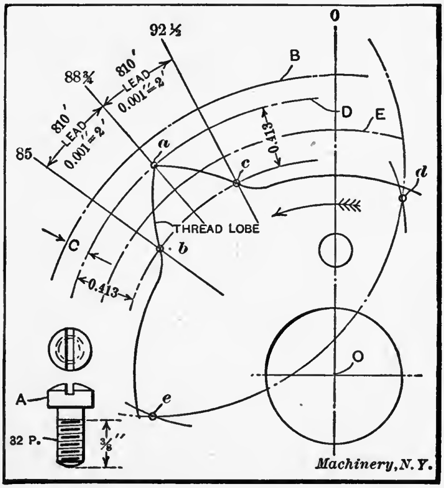

Fig. 8. Method of Constructing Thread Lobe on Lead Cam

Developing Cam Lobe for Threading Operation. — When cutting a thread on the Brown & Sharpe automatic screw machines, the die is started on the work by the threading lobe on the lead cam which actuates the turret-slide, and then the die movement is governed by the lead of the thread, the turret traveling at a slightly slower rate. If the cam were laid out to positively control the movement of the threading die, unsatisfactory results would be obtained, as the die would be crowded at times, owing to the fact that the spindle speed and the speed of the driving shaft are not constantly in exactly the same ratio; therefore, the cam lobe is laid out so that it gives the die a positive start when cutting the first two threads, and then the cam is relieved so that the turret-slide lags behind slightly.

Before the thread lobe can be constructed, the length of the threaded portion, the number of threads per inch, and the total number of revolutions of the spindle for completing one piece must be determined. The rise on the cam may then be found by the following formulas:

From 14 to 24 threads per inch, $r = (R \div p) \times 0.85$
From 28 to 48 threads per inch, $r = (R \div p) \times 0.88$
From 56 to 80 threads per inch, $r = (R \div p) \times 0.90$

in which,

R = revolutions required for threading;
p = number of threads per inch;
r = rise on cam.

The accompanying tables, "Spindle Revolutions and Cam Rise for Threading," give the spindle revolutions for threading various lengths and pitches, and the corresponding rise for the cam lobe. To illustrate the use of these tables, suppose that a cam is to be laid out for threading the screw shown at *A*, Fig. 8, on a No. 00 Brown & Sharpe automatic screw machine. Assume that the spindle speed is to be 2400 revolutions per minute; the number of revolutions to complete one piece, 400; time required to make one piece, 10 seconds; length of the threaded portion, $\frac{3}{8}$ inch; pitch of the thread, $\frac{1}{32}$ inch, or 32 threads per inch. By referring to Table III, under "32 threads per inch" and opposite "$\frac{3}{8}$" (length of threaded portion) the number of revolutions required is found to be 15 and the rise of the cam lobe, 0.413 inch.

To construct the lobe, convert the revolutions into hundredths of cam surface, or $15 \div 400 = 0.0375$, or $3\frac{3}{4}$ hundredths. Then draw the cam circle *B*, as shown in Fig. 8, and lay off on this circle $3\frac{3}{4}$ hundredths to advance on the screw and $3\frac{3}{4}$ hundredths to withdraw. Locate the top of the lobe an amount *C* below the outer cam circle *B* as required. Bisect the rise at *E*, and, with *OE* as a radius and *a*, *b*, and *c* as centers, draw arcs intersecting each other at *d* and *e*. With *d* as a

Table III. Spindle Revolutions and Cam Rise for Threading

Length of Threaded Portion	Number of Threads per Inch											
	64	56	48	40	36	32	30	28	24	20	18	16
	First Line: Revolutions of Spindle for Threading Second Line: Rise on Cam for Threading											
$\frac{1}{32}$	6.50 0.091	6.50 0.104	4.50 0.082	4.50 0.099	4.00 0.098	4.00 0.110	4.00 0.117	4.00 0.126	....	....	....	....
$\frac{1}{16}$	8.50 0.120	8.00 0.129	6.00 0.110	5.50 0.121	5.50 0.134	5.00 0.138	5.00 0.147	5.00 0.157	3.00 0.106	....	....	....
$\frac{3}{32}$	10.50 0.148	10.00 0.161	7.50 0.137	7.00 0.154	6.50 0.159	6.00 0.165	6.00 0.176	5.50 0.173	4.00 0.142	3.50 0.149	....	....
$\frac{1}{8}$	12.50 0.176	11.50 0.185	9.00 0.165	8.00 0.176	7.00 0.171	7.00 0.193	7.00 0.205	6.50 0.204	4.50 0.159	4.00 0.170	3.50 0.165	3.50 0.186
$\frac{5}{32}$	14.50 0.204	13.50 0.217	10.50 0.192	9.50 0.209	8.50 0.208	8.00 0.220	7.50 0.220	7.50 0.236	5.50 0.195	4.50 0.191	4.00 0.189	4.00 0.212
$\frac{3}{16}$	16.50 0.232	15.00 0.241	12.00 0.220	10.50 0.231	10.00 0.244	9.00 0.248	8.50 0.249	8.50 0.267	6.00 0.213	5.50 0.234	5.00 0.236	4.50 0.239
$\frac{7}{32}$	18.50 0.260	17.00 0.273	13.50 0.247	12.00 0.264	11.00 0.269	10.00 0.275	9.50 0.279	9.00 0.283	7.00 0.248	6.00 0.255	5.50 0.260	5.00 0.266
$\frac{1}{4}$	20.50 0.288	18.50 0.297	15.00 0.275	13.00 0.286	12.00 0.293	11.00 0.303	10.50 0.308	10.00 0.314	7.50 0.266	6.50 0.276	6.00 0.283	5.50 0.292
$\frac{9}{32}$	22.50 0.316	20.50 0.329	16.50 0.302	14.50 0.319	13.00 0.318	12.00 0.330	11.50 0.337	11.00 0.346	8.50 0.301	7.00 0.298	6.50 0.307	6.00 0.319
$\frac{5}{16}$	24.50 0.345	22.00 0.354	18.00 0.340	15.50 0.341	14.50 0.354	13.00 0.358	12.50 0.367	12.00 0.377	9.00 0.319	8.00 0.340	7.00 0.330	6.50 0.345
$\frac{11}{32}$	26.50 0.373	24.00 0.386	19.50 0.357	17.00 0.374	15.50 0.379	14.00 0.385	13.50 0.396	12.50 0.393	10.00 0.354	8.50 0.361	7.50 0.354	7.00 0.372
$\frac{3}{8}$	28.50 0.401	25.50 0.410	21.00 0.385	18.00 0.396	16.50 0.403	15.00 0.413	14.50 0.425	13.50 0.424	10.50 0.372	9.00 0.383	8.50 0.401	7.50 0.398
$\frac{13}{32}$	30.50 0.429	27.50 0.442	22.50 0.412	19.50 0.429	17.50 0.428	16.00 0.440	15.00 0.440	14.50 0.456	11.50 0.407	9.50 0.404	9.00 0.425	8.00 0.425
$\frac{7}{16}$	32.50 0.457	29.00 0.466	24.00 0.440	20.50 0.451	19.00 0.464	17.00 0.468	16.00 0.469	15.50 0.487	12.00 0.425	10.50 0.446	9.50 0.448	8.50 0.451
$\frac{15}{32}$	34.50 0.484	31.00 0.498	25.50 0.477	22.00 0.484	20.00 0.489	18.00 0.495	17.00 0.499	16.00 0.503	13.00 0.460	11.00 0.468	10.50 0.496	9.00 0.478
$\frac{1}{2}$	36.50 0.513	32.50 0.522	27.00 0.495	23.00 0.506	21.00 0.513	19.00 0.523	18.00 0.528	17.00 0.534	13.50 0.478	11.50 0.489	10.50 0.496	9.50 0.504
$\frac{17}{32}$	38.50 0.541	34.50 0.554	28.50 0.522	24.50 0.539	22.00 0.538	20.00 0.550	19.00 0.557	18.00 0.566	14.50 0.514	12.00 0.510	11.00 0.519	10.00 0.531
$\frac{9}{16}$	40.50 0.570	36.00 0.579	30.00 0.550	25.50 0.561	23.50 0.574	21.00 0.578	20.00 0.587	19.00 0.597	15.00 0.531	13.00 0.553	11.50 0.543	10.50 0.558
$\frac{19}{32}$	42.50 0.598	38.00 0.611	31.50 0.577	27.00 0.594	24.50 0.599	22.00 0.605	21.00 0.616	19.50 0.613	16.00 0.567	13.50 0.574	12.00 0.566	11.00 0.584
$\frac{5}{8}$	44.50 0.626	39.50 0.635	33.00 0.605	28.00 0.616	25.50 0.623	23.00 0.633	22.00 0.645	20.50 0.644	16.50 0.584	14.00 0.595	13.00 0.614	11.50 0.611
$\frac{21}{32}$	46.50 0.654	41.50 0.667	34.50 0.622	29.50 0.649	26.50 0.648	24.00 0.660	23.00 0.675	21.50 0.676	17.50 0.620	14.50 0.616	13.50 0.637	12.00 0.637
$\frac{11}{16}$	48.50 0.682	43.00 0.691	36.00 0.660	30.50 0.671	28.00 0.684	25.00 0.688	23.50 0.689	22.50 0.707	18.00 0.638	15.50 0.659	14.00 0.661	12.50 0.664
$\frac{23}{32}$	50.50 0.710	45.00 0.723	37.50 0.677	32.00 0.704	29.00 0.709	26.00 0.715	24.50 0.719	23.00 0.723	19.00 0.673	16.00 0.680	14.50 0.684	13.00 0.690
$\frac{3}{4}$	52.50 0.738	46.50 0.747	39.00 0.715	33.00 0.726	30.00 0.733	27.00 0.743	25.50 0.748	24.00 0.754	19.50 0.691	16.50 0.701	15.00 0.708	13.50 0.717

Table IV. Spindle Revolution and Cam Rise for Threading

Length of Threaded Portion	Number of Threads per Inch											
	64	56	48	40	36	32	30	28	24	20	18	16
	First Line: Revolutions of Spindle for Threading Second Line: Rise on Cam for Threading											
$\frac{25}{32}$	54.50 0.767	48.50 0.779	40.50 0.742	34.50 0.759	31.00 0.758	28.00 0.770	26.50 0.777	25.00 0.786	20.50 0.726	17.00 0.723	15.50 0.732	14.00 0.743
$\frac{13}{16}$	56.50 0.795	50.00 0.804	42.00 0.770	35.50 0.781	32.50 0.794	29.00 0.798	27.50 0.807	26.00 0.817	21.00 0.744	18.00 0.765	16.00 0.755	14.50 0.770
$\frac{27}{32}$	58.50 0.823	52.00 0.836	43.50 0.797	37.00 0.814	33.50 0.819	30.00 0.825	28.50 0.836	26.50 0.833	22.00 0.779	18.50 0.786	16.50 0.779	15.00 0.797
$\frac{7}{8}$	60.50 0.851	53.50 0.860	45.00 0.825	38.00 0.836	34.50 0.843	31.00 0.853	29.50 0.865	27.50 0.864	22.50 0.797	19.00 0.808	17.50 0.826	15.50 0.823
$\frac{29}{32}$	62.50 0.879	55.50 0.892	46.50 0.842	39.50 0.869	35.50 0.868	32.00 0.880	30.00 0.880	28.50 0.895	23.50 0.832	19.50 0.829	18.00 0.850	16.00 0.850
$\frac{15}{16}$	64.50 0.907	57.00 0.916	48.00 0.880	40.50 0.891	37.00 0.904	33.00 0.908	31.00 0.909	29.50 0.927	24.00 0.850	20.50 0.871	18.50 0.873	16.50 0.876
$\frac{31}{32}$	66.50 0.935	59.00 0.948	49.50 0.907	42.00 0.924	38.00 0.929	34.00 0.935	32.00 0.939	30.00 0.943	25.00 0.885	21.00 0.893	19.00 0.897	17.00 0.903
1	68.50 0.963	60.50 0.972	51.00 0.918	43.00 0.946	39.00 0.953	35.00 0.963	33.00 0.968	31.00 0.974	25.50 0.903	21.50 0.914	19.50 0.920	17.50 0.929
$1\frac{1}{16}$	72.50 1.019	64.00 1.028	54.00 0.990	45.50 1.001	41.50 1.013	37.00 1.018	35.00 1.026	32.00 1.005	27.00 0.956	23.00 0.978	20.50 0.968	18.50 0.982
$1\frac{1}{8}$	76.50 1.076	67.50 1.084	57.00 1.045	48.00 1.056	43.50 1.061	39.00 1.073	37.00 1.084	34.50 1.083	28.50 1.009	24.00 1.020	22.00 1.038	19.50 1.035
$1\frac{3}{16}$	80.50 1.126	71.00 1.141	60.00 1.100	50.50 1.111	46.00 1.122	41.00 1.128	38.50 1.128	36.50 1.146	30.00 1.062	25.50 1.084	23.00 1.086	20.50 1.089
$1\frac{1}{4}$	84.50 1.188	74.50 1.197	63.00 1.155	53.00 1.166	48.00 1.171	43.00 1.183	40.50 1.187	38.00 1.193	31.50 1.115	26.50 1.126	24.00 1.133	21.50 1.142
$1\frac{5}{16}$	88.50 1.244	78.00 1.253	66.00 1.210	55.50 1.221	50.50 1.232	45.00 1.238	42.50 1.245	40.00 1.256	33.00 1.168	28.00 1.190	25.00 1.180	22.50 1.195
$1\frac{3}{8}$	92.50 1.301	81.50 1.310	69.00 1.265	58.00 1.276	52.50 1.281	47.00 1.293	44.50 1.304	41.50 1.303	34.50 1.211	29.00 1.233	26.50 1.251	23.50 1.248
$1\frac{7}{16}$	96.50 1.357	85.00 1.366	72.00 1.320	60.50 1.331	55.00 1.342	49.00 1.348	46.00 1.348	43.50 1.366	36.00 1.274	30.50 1.296	27.50 1.298	24.50 1.301
$1\frac{1}{2}$	100.5 1.413	88.50 1.422	75.00 1.375	63.00 1.386	57.00 1.391	51.00 1.403	48.00 1.406	45.00 1.413	37.50 1.328	31.50 1.339	28.50 1.345	25.50 1.354
$1\frac{9}{16}$	104.5 1.469	92.00 1.478	78.00 1.430	65.50 1.441	59.50 1.452	53.00 1.458	50.00 1.465	47.00 1.476	39.00 1.381	33.00 1.403	29.50 1.392	26.50 1.407
$1\frac{5}{8}$	....	95.50 1.535	81.00 1.485	68.00 1.496	61.50 1.501	55.00 1.513	52.00 1.524	48.50 1.523	40.50 1.434	34.00 1.445	31.00 1.463	27.50 1.460
$1\frac{11}{16}$	....	99.00 1.591	84.00 1.540	70.50 1.551	64.00 1.562	57.00 1.568	53.50 1.568	50.50 1.586	42.00 1.487	35.50 1.509	32.00 1.510	28.50 1.513
$1\frac{3}{4}$	....	102.5 1.647	87.00 1.595	73.00 1.606	66.00 1.610	59.00 1.623	55.50 1.626	52.00 1.633	43.50 1.540	36.50 1.551	33.00 1.558	29.50 1.566
$1\frac{13}{16}$	....	106.0 1.703	90.00 1.650	75.50 1.661	68.50 1.671	61.00 1.678	57.50 1.685	54.00 1.696	45.00 1.593	38.00 1.615	34.00 1.605	30.50 1.620
$1\frac{7}{8}$	....	....	93.00 1.705	78.00 1.716	70.50 1.720	63.00 1.733	59.50 1.743	55.50 1.743	46.50 1.646	39.00 1.658	35.50 1.676	31.50 1.673
$1\frac{15}{16}$	....	....	96.00 1.760	80.50 1.771	73.00 1.781	65.00 1.788	61.00 1.787	57.50 1.806	48.00 1.700	40.50 1.721	36.50 1.723	32.50 1.726
2	....	....	99.00 1.815	83.00 1.826	75.00 1.830	67.00 1.843	63.00 1.846	59.00 1.853	49.50 1.752	41.50 1.764	37.50 1.770	33.50 1.779

center and radius OE, join points b and a; with e as a center and radius OE, join points c and a. This gives the shape of the thread lobe.

For convenience in cutting, when a Brown & Sharpe circular milling attachment is available, the cam surface used for threading is divided into minutes. Then, to obtain the lead (or the number of minutes traversed for each $\frac{1}{1000}$-inch rise) divide the number of minutes contained in the portion of the lobe used, by the rise. For example, $0.810 \div 0.413 = 1.96$, or 2 minutes, approximately.

Allowance for Tool Clearance. — In laying out a set of cams, it is sometimes found necessary to make allowance

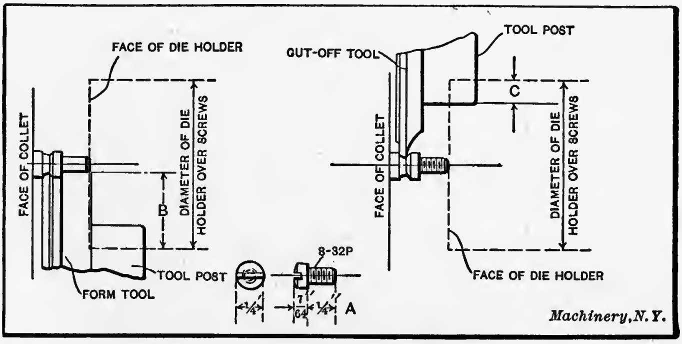

Fig. 9. Diagram illustrating Method of Finding Clearance for Die-holder

for one tool to clear another, the amount of clearance necessary being determined by the diameter or width of tool used in the turret and the position of the cross-slide tools relative to the work. When determining the amount of clearance necessary, the rise and drop on the lead cam is disregarded and the rises and drops on the front-slide and back-slide cams are taken into consideration. To determine the rise and drop to use, make a rough lay-out of the various operations to be performed and also ascertain the approximate number of revolutions to complete one piece. The revolutions are then converted into seconds. Assume that it is required to make a brass screw as shown in Fig. 9. This screw is to be made from $\frac{1}{4}$-inch round brass rod, on the No. 00 Brown &

Sharpe automatic screw machine, using a spindle speed of 2400 revolutions per minute backward and forward. Assume that it is required to find the amount of clearance necessary for the die-holder to pass the circular form and cut-off tools. Draw in the form tool in position on the screw as shown to the left, and also an outline of the toolpost. Then lay out the die-holder in position to start on the screw, as shown by the dotted lines. If a releasing die-holder is used, take the diameter over the heads of the screws in the holder, but, if a "draw-out" type is used, the diameter of the cap is taken. In this case, assume that a releasing die-holder is to be used. The die-holder cannot advance on the screw until the form tool drops back a distance *B*, but, as *B* is the actual distance, it will be necessary to add an extra amount to insure that the die-holder can advance without coming in contact with the circular form

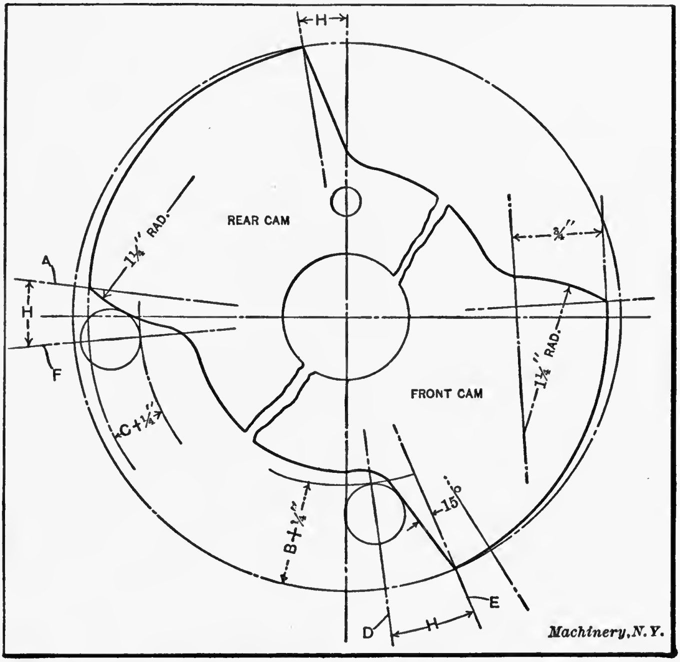

Fig. 10. Method of Determining Clearance on Cross-slide Cams

tool. The extra amount of clearance necessary varies with the type of tool used. The following dimensions give the approximate amounts that should be added to the actual clearance for the type of tools specified:

Type of Tool	Extra Amount of Clearance, Inch
Drill-holders	from $\frac{1}{8}$ to $\frac{3}{16}$
Box-tools (with V-supports)	from $\frac{1}{8}$ to $\frac{1}{4}$
Box-tools (with supporting bushing)	from $\frac{3}{16}$ to $\frac{5}{16}$
Button-die holders (draw-out type)	from $\frac{3}{16}$ to $\frac{5}{16}$
Button-die holders (releasing type)	from $\frac{1}{4}$ to $\frac{1}{2}$

To find the amount necessary for clearance, make a diagram as shown in Fig. 10, laying out the drop on the front cam as shown. Then add, say, $\frac{1}{4}$ inch to dimension *B* and measure down from the point where the lobe finishes, scribing an arc of a circle through the point thus located, as shown. Then with a radius equal to the radius of the cam roll, describe a circle touching the arc drawn and the drop on the cam. Join the center of the roll with the center of the cam circle by a straight line. The clearance is then measured off in hundredths, as shown by dimension *H*. The starting point of the lobe on the lead cam for threading will be at the hundredth line *D*, and the intervening space between the lines *D* and *E* will be the amount necessary for clearance.

When the cutting-off operation follows the threading operation, it will also be necessary to allow for clearance. To find the amount of clearance necessary for the die-holder to clear the circular cut-off tool, proceed as follows: Make a lay-out as shown to the right in Fig. 9, measure the distance *C*, add $\frac{1}{4}$ inch to *C*, and lay off this dimension from the starting point *A* of the rear cam as shown in Fig. 10, drawing an arc of a circle as before. Then draw a circle the diameter of which is equal to the diameter of the roll, touching the arc drawn and the rise on the cam, and measure off the clearance *H* as previously explained. The thread lobe would finish at the hundredth line *F* and the cut-off tool start at the line *A*. Clearance should also be allowed between the dropping back of the cut-off tool and the feeding of the stock. To find the amount of clearance necessary add $\frac{1}{8}$ inch to the largest radius of the stock used, and proceed as previously explained.

Use of Cam-lever Templets. — Cam-lever templets similar to those shown in Fig. 11 are used for laying out cams when very close timing is required, as, for instance, when a tool is operated by the combined action of the cross-slide and the turret-slide. When templets are used, the center *A* is pivoted at the center of the cam drawing, by inserting a pin or other pointed instrument through the small hole provided for that purpose. The main body *B* of the templet can then be rotated in any desired direction, so that the two templet arms, representing the cross-slide cam lever and the lead cam lever which operates the turret, can be set in whatever position relative to each other may be required. These cam-lever templets are made from sheet celluloid and are transparent, so that marks on the drawing can easily be seen. The use of a cam-lever templet will be illustrated by considering the method of finding the starting and finishing points on the lobes of the cross-slide and lead cams for a chamfering operation.

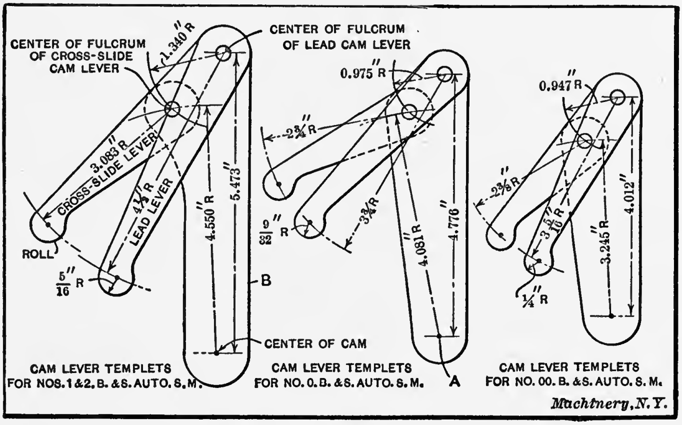

Machinery, N.Y.

Fig. 11. Nos. 00, 0, 1, and 2, Brown & Sharpe Automatic Screw Machine Cam-lever Templets for Finding the Starting and Finishing Points of the Lobes for the Cross-slide and Lead Cams

There are two methods used in laying out a set of cams when it is necessary to obtain clearances or definite starting points for the lead and cross-slide cam lobes. The first one is to obtain a rough estimate of the total number of revolutions required to complete one piece, after which the revolutions are transferred into hundredths of cam circumference, and the location of the lobes laid out on the cam circles. Then the "rises" and "drops" are constructed and the amount of clearance obtained by the cam-lever templets. This method usually requires considerable experience in this line of work.

Another method is to first find the rise on the cross-slide cam for chamfering. Then draw a diagram as shown in Fig. 12.

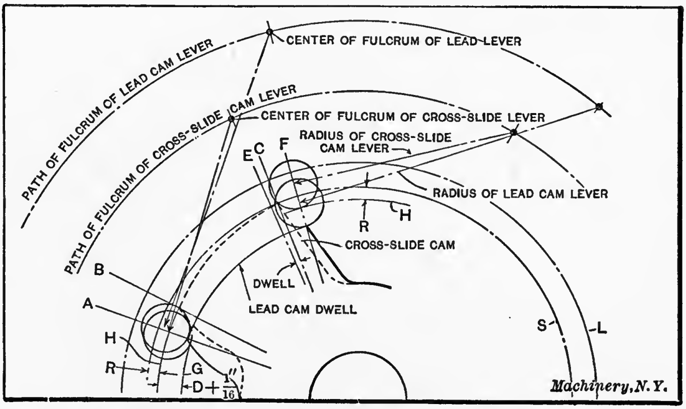

Fig. 12. Diagram for Finding the Starting and Finishing Points of the Lobes of the Cross-slide and Lead Cams for Chamfering Operations

First draw circles *L* and *S*, representing the largest diameter of the lead cam and the largest diameter of the cross-slide cam, respectively; then draw another circle *H* a distance *R* inside of the circle *S*, as shown, the dimension *R* being the rise on the cross-slide cam. In chamfering operations, the tool should move longitudinally the proper distance into the work before the cross-slide cam starts to operate. Therefore, the lead-cam roll should be on the highest point of the lobe before the cam on the cross-slide, used for feeding in the tool, touches the tool-holder. In order to accomplish this result, proceed as follows. Draw a circle *G*, as shown in Fig. 12, which has a radius an amount $R + D + \frac{1}{16}$ smaller than that of circle *S*.

The value of D is equal to the distance that the point of the tool extends in from the face of the work when in position for chamfering. The $\frac{1}{16}$ inch added to D allows for clearance. After these circles have been drawn, the starting and finishing points of the lobes can be found.

The cam-lever templet is now placed in position, and the lead-cam roll is located so that its circumference touches the lobe on the lead cam and its center coincides with the line A indicating the completion of the lead-cam rise. Then the cross-slide lever is swung down so that the circumference of the roll touches the circle G as shown, and, with a sharp pencil, a line is scribed around the circumference of the roll, which will determine the quick rise of the cam. The compasses are then set to the desired radius for the quick rise of the cam, which is described so that it will cut the circle H, representing the start of the rise on the cross-slide cam, and also be tangent to the line which has been previously marked by scribing around the cross-slide lever roll. Where the quick rise of the cam and the circle H meet will be the starting point of the rise on the cross-slide cam, indicated by the line B, as shown.

When the starting points have been found, the next thing is to obtain the finishing points of the lobe. The lead cam should hold the tool in position until the cross-slide cam has dropped back an amount equal to the distance which it has fed the tool into the work. A line F is drawn at any convenient position for the finishing point of the lead cam, and the cam-lever templet is then brought into position so that the roll of the lead lever touches the circle and the center coincides with the line F as shown. The cross-slide roll is then swung down until its circumference touches the circle H and a line is scribed around the circumference of the roll. Where this line intersects, the circle representing the largest diameter of the cam will be the finishing point of the lobe, provided the distance R is not greater than the radius of the roll. If distance R is greater than this radius, the line representing the drop should be constructed tangent to the roll circumference, and where the line representing the drop intersects the outside circle will be the finishing point of the lobe, as indicated by line *C*. The space from *E* to *C* represents from one to two revolutions for dwell on the cross-slide cam. The advantage of this method is that the amount of clearance between the starting and finishing points of the lead and cross-slide cams is known in hundredths of the cam circle circumference before the cams are laid out, thus facilitating the operation of laying out the cams.

Laying Out Cams for Recessing. — In Fig. 13 a method is shown for finding the starting and finishing points on the lobes of the cross-slide and lead cams for recessing. To determine these points, the cam-lever templets are used. The starting point, indicated by line *A*, and the circle representing the dwell on the lead cam are first laid out. A circle is then drawn, the radius of which is a distance *K* greater than the circle representing the dwell on the lead cam. (Distance *K* is equal to the length of the recessing cut.) Before beginning to lay out the cam, a maximum cam diameter should be decided upon which will suit the length of the tool-holder used in the turret. A circle passing through the starting point of the rise of the cross-slide cam, as well as a circle representing the dwell on the cross-slide cam, should also be drawn, the

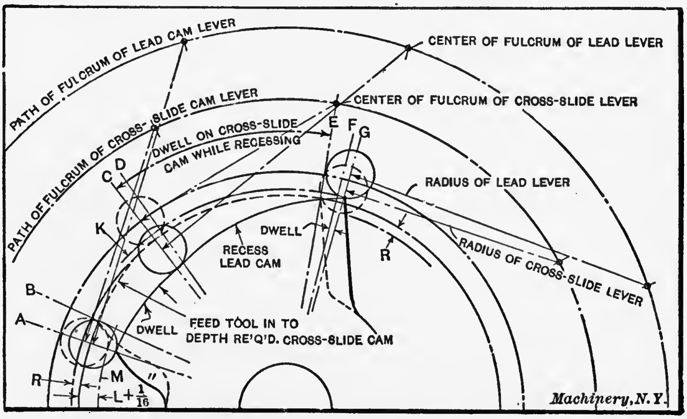

Fig. 13. Diagram for Finding the Starting and Finishing Points on the Lobes of the Cross-slide and Lead Cams for Recessing Operations

difference in radii between these two circles being the rise *R*. Now the cam-lever templets are placed in position on the drawing, and the lead roll brought down so that it touches the lead cam, its center coinciding with line *A*. A circle *M* is next drawn, having a radius $L + \frac{1}{16}$ inch less than that of the circle passing through the starting point of the rise of the cross-slide cam. *L* equals the distance from the outer face of the work to the inner edge of the recessing tool when the latter is in the starting position. The cross-slide roll is then swung down until its circumference touches the circle *M*, as shown, and a line is drawn around the circumference of the roll. The quick rise line of the cam is then constructed tangent to the roll, and where this line intersects the circle previously drawn, which determines the beginning of the slow feeding-in rise of the cross-slide cam, is the starting point of the slower rise of the cross-slide cam, as shown at *B*. The line *C*, which represents the finishing point of the rise on the cross-slide cam for feeding the tool inward, is then laid off and the cross-slide roll swung into position. The lead roll is then swung down until it touches the circle representing the dwell on the lead cam. The starting point of the rise on the lead cam, located on line *D*, is slightly in advance of the finishing point on the cross-slide cam.

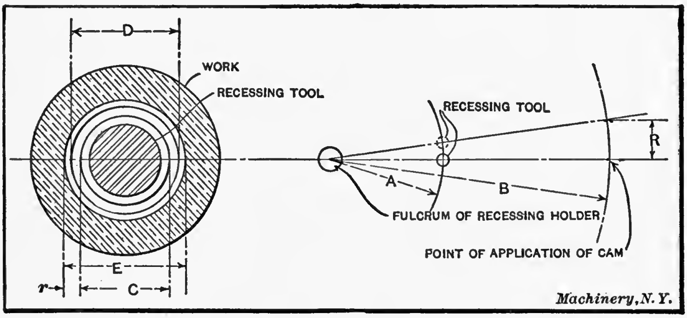

Machinery, N.Y.

Fig. 14. Diagram for Finding Rise on Cross-slide Cam for Recessing and Chamfering Operations

The finishing points of the lobes are next located. Any line, as *G*, is taken at a convenient location, and the cam-lever templets are then used. The lead roll is first brought into position as shown, and then the cross-slide roll is swung down from the outside diameter of the cam a distance equal to R, and the drop laid off as before mentioned in regard to chamfering operations. The finishing point of the cross-slide lobe would then be on the line E. The space from C to E on the cross-slide cam would be for dwell, while the space from D to G on the lead cam would be the rise. The space from F to G is for dwell on the lead cam, which represents about one or two revolutions.

Rise on Cross-slide Cam for Recessing and Chamfering. — When using a swing tool for recessing, the rise on the cam should be greater than the distance which the tool is fed into the work. To illustrate the method of finding the rise on the cam, refer to Fig. 14, where

A = distance from center of fulcrum to center of the recessing tool;
B = distance from center of fulcrum to point of application of cam or center of screw at end of swinging member;
C = diameter of recessing tool;
D = diameter of drilled hole in the work;
E = diameter of recessed hole;
r = travel of recessing tool = $\frac{E - C}{2}$;
R = rise on the cam.

Then $R : r :: B : A$. As a practical example, let r equal 0.040 inch; B, $2\frac{1}{4}$ inches; A, $1\frac{1}{8}$ inch; then

$$R = \frac{0.040 \times 2\frac{1}{4}}{1\frac{1}{8}} = 0.080 \text{ inch.}$$

Cam Rise for Drilling. — There are three general conditions which govern the amount of rise required for drilling: 1. When the drill does not pass through the work and a centering tool is not used. 2. When the drill does not pass through the work and a centering tool is used. 3. When the drill passes through the work and a centering tool is used. There is also another condition, *viz.*, when the drill passes through the work and a centering tool is not used; but, as this is not a commendable method, it is not here considered.

The rise on the cam for drilling, as governed by the previous conditions, is as follows:

1. $R = g + e + 0.010$ inch;
2. $R = g - a + 0.010$ inch;
3. $R = h + k - a + 0.010$ inch;

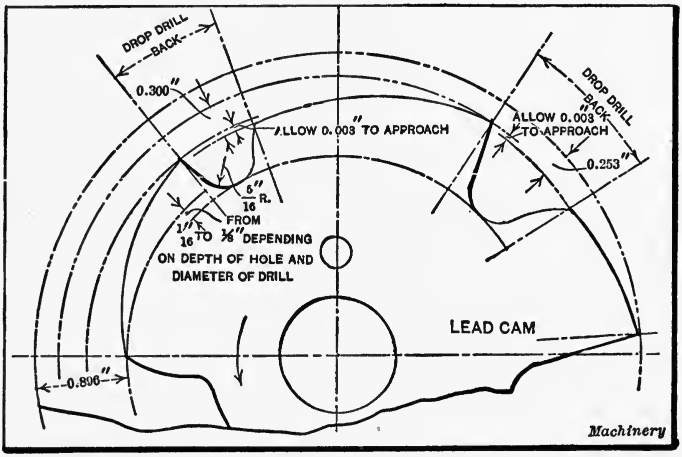

Fig. 15. Method of Laying Out Cams for Deep-hole Drilling

where R = rise on cam for drilling;
g = depth of hole to be drilled;
e = length of point on the drill;
h = overall length of the work;
k = thickness of the cut-off tool;
a = distance from the face of the work to a place in the centered end where the outer edges of the drill begin to cut.

The values of a for centering tools having 90- and 100-degree-point angles are as follows:

For 90 degrees, $a = (d - c) \times 0.5$ inch;
For 100 degrees, $a = (d - c) \times 0.43$ inch;

where d = diameter of centering hole;
c = diameter of drill.

Designing Cams for Deep-hole Drilling. — When drilling deep holes, the drill should be withdrawn clear of the drilled hole, after penetrating to a depth not exceeding two and one-half times the drill diameter, so that the chips can be removed from the flutes and the drill cooled and lubricated. To accomplish this, the lead cam is laid out as shown in Fig. 15. To explain the method used for laying out the cam, assume that a hole $\frac{1}{8}$ inch in diameter and $\frac{7}{8}$ inch long is to be drilled in a piece of brass rod. This will require three lobes on the cam, as it will be necessary to drop the drill back twice in producing the hole. The rises for the various lobes can be found with the aid of the following formulas:

Rise on first lobe $= 2\frac{3}{4} \times D + 0.005$ inch;
Rise on second lobe $= 2\frac{3}{8} \times D + 0.003$ inch;
Rise on third lobe $= 2 \times D + 0.003$ inch;
where $D =$ diameter of drill in inches.

The amount for each successive rise should be decreased in about the same proportion, and the feed on the drill should also be decreased slightly for each additional lobe when cutting machine and tool steel; but, when cutting brass, the feed can generally be uniform for each lobe. The rise on the various lobes would then be as follows:

Rise on first lobe $= 2\frac{3}{4} \times \frac{1}{8} + 0.005 = 0.349$ inch;
Rise on second lobe $= 2\frac{3}{8} \times \frac{1}{8} + 0.003 = 0.300$ inch;
Rise on third lobe $= 2 \times \frac{1}{8} + 0.003 = 0.253$ inch.

The depth to which the drill can be fed into the work before withdrawing can sometimes be increased, especially when a turret drilling attachment is used and the drill is greater than $\frac{1}{8}$ inch in diameter. The space on the cam surface necessary for dropping the drill back is generally equal to the space necessary for revolving the turret. It is, therefore, advisable to use more than one drill when there is a sufficient number of empty holes in the turret, as it will not be necessary to resharpen the drills so frequently, and they will also be kept cooler.

CHAPTER VIII

OPERATIONS ON SINGLE- AND MULTIPLE-SPINDLE SCREW MACHINES

The operations ordinarily performed in automatic screw machines involve plain cylindrical turning, taper turning, forming of irregular surfaces, drilling, counterboring, reaming, cutting annular grooves or recesses in holes, thread cutting, and knurling. The number and kind of cutting tools used on the machines depend, of course, upon the nature of the work; that is, its size and the form and location of the surfaces which must be acted upon by the tools. The turning of simple parts, such as ordinary screws, pins, etc., from a bar of stock can be done by using the regular tool equipment commonly employed on all screw machines, whereas more difficult work might necessitate the use of special tools and, in some cases, attachments for extending the range of the machine. Before a machine of this type is equipped for a machining operation, it is essential to consider the best method of arranging the various tools, as well as the different types of tools available, so that the successive operations may be performed to the best advantage as to economy of production and the degree of finish and accuracy required. To what extent standard tools may be used should also be determined, and whether or not special tool equipment will increase the rate of production sufficiently to warrant their expense.

A general idea of the tool equipment used for different operations and also the classes of work for which automatic screw machines are used may be obtained by studying the examples described in this chapter. Some of these examples illustrate the use of comparatively simple tool equipment, whereas others represent operations for which special tools and ingenious attachments are required.

Before reducing the diameter of the work by means of a box-tool or other external cutting tool of a similar type, it is necessary to chamfer the end of the work to permit starting the box-tool cutter on a light cut, until the supports are in position to steady the work. Pointing or chamfering the end of the work also facilitates the setting of a hollow mill concentric with the work.

One method of pointing the end of the work is shown at *A* in Fig. 1. The circular cut-off tool has an angular projection on its face next to the chuck, which points the bar before it is fed out for the next piece. This method is generally used when the work is not very long, and when it runs practically true. When it is necessary to cut a thread on a piece, the beveled end of the bar is made small enough to facilitate the starting of the die. It is sometimes impossible to point the bar with the cut-off tool, and, in this case, the bar is usually pointed by a combination centering and pointing tool as shown at *B*. This tool can be used when the bar does not project more than three and one-half times its diameter from the face of the chuck, and also when the bar is unfinished or of irregular shape. The tool *a* is used for centering the work, thus preparing it for drilling a hole, and the tool *b* is used for pointing the end of the bar.

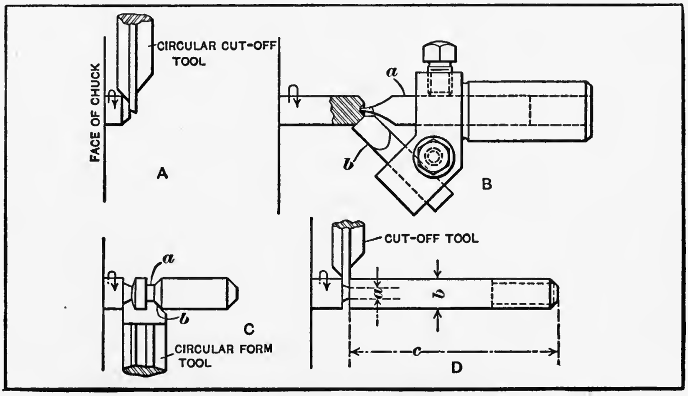

Fig. 1. Methods of Preparing Work for Turning

Another condition is shown at *C*. Here the form tool precedes the box-tool, "necking" the bar at *a*. If the face *b* of the circular tool were left square and not chamfered, as shown, a thin ring would break off before all the material had been removed, as illustrated at C_3, Fig. 2, Chapter IV.

Turning Concentric with Unturned Surface. — When it is necessary to turn down a portion of a long cylindrical piece of cold-drawn steel or other material which has a finished surface, and have the part turned concentric with that which has not been reduced, it is usually good practice to weaken the bar with the circular cut-off tool as shown at *D*, Fig. 1. For this class of work, a supporting bushing held in the box-tool should precede the turning tool, so that the part turned will be concentric with the finished body of the work. Before turning, the bar is pointed with the circular cut-off tool as shown at *A*.

The diameter *a* of the neck should be small enough to allow the bar to be straightened with the box-tool support, so that it will run true. In the majority of cases, the neck *a* may be made from 0.3 to 0.5 times *b*, but the length *c* of the work, the depth of the chip removed, and the feed used, will govern largely the diameter of the neck. The material being turned will also affect this diameter slightly, but in most cases this latter condition can be disregarded. Rods which have short bends in them should not be used, as it will be found impossible to produce a good surface on the part which is turned. The spring collet should also run perfectly true, if good results are to be expected.

Examples of Forming Operations. — According to a common rule, two and one-half times the smallest diameter of the work is the maximum width advised for forming; that is, the width of the form tool cutter *a* for forming the screw at *A* in Fig. 2 should not exceed two and one-half times the diameter of the threaded body *b*. This means that, when a piece is too long to form, it must be reduced by an end-working tool, such as a hollow mill or a box-tool.

This rule, however, is subject to variations. By actual test it has been found that screws and other parts made from machine and tool steel can be formed with a form tool the width of which is four times the smallest diameter of the part to be formed. This does not mean a piece of the shape shown at *B* in Fig. 2, where the smallest diameter *c* is on the end of the piece, but it applies to pieces similar to those shown at *A*, *C*, and *D*, where the smallest diameter of the work is next to the spindle. Again, it would be very easy to form with a tool of a width equal to four times the smallest diameter, if that diameter were not very small. Two examples of this class of forming are given, and can safely be used as a guide for doing work of a similar character.

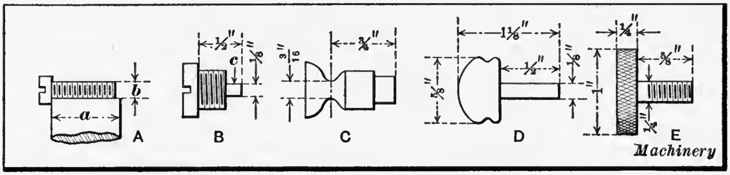

Fig. 2. Examples of Forming Tool Operations

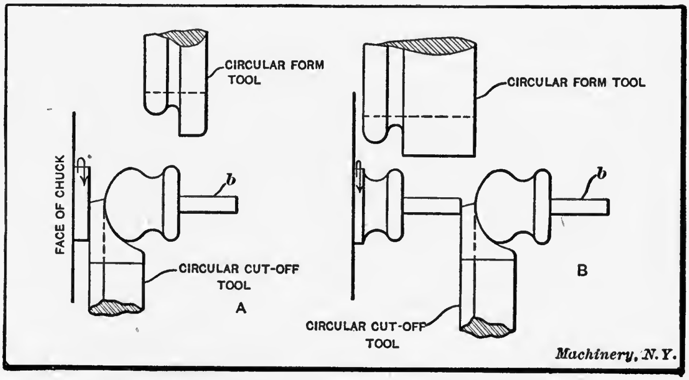

Fig. 3. Method of Applying the Circular Forming and Cutting-off Tools

The first test was the forming of a $\frac{5}{8}$-inch piece of screw stock with a tool $\frac{7}{16}$ inch wide, down to $\frac{7}{64}$ inch in diameter. In this case, the width is four times the smallest diameter. This test was performed on a No. 2 Brown & Sharpe automatic screw machine and the surface speed of the stock averaged about from 80 to 85 feet per minute, with a feed of 0.001 inch per revolution. This forming was successfully done without any of the pieces breaking off. The second test was made on a piece of $\frac{3}{8}$-inch iron wire, which was formed to a diameter of $\frac{3}{16}$ inch, the form tool in this case being 1 inch wide. This test was made on a $\frac{3}{8}$-inch Cleveland automatic screw machine. The maximum surface speed of the stock was 90 feet per minute and it was calculated as nearly as possible that the chip averaged from 0.0004 to 0.0008 inch thick. Therefore, the use of a hollow mill or box-tool can sometimes be avoided and circular form and cut-off tools used instead. The two methods of forming the piece shown at *A* and *B* in Fig. 3 on the No. 2 Brown & Sharpe automatic screw machine, and the following order of operations, show clearly the advantage that the forming method has over the box-tool or hollow-mill method of turning. With the method shown at *A*, two roughing box-tools are used for reducing the diameter of the stem *b*, and, as the stem was also required to be smooth, a finishing box-tool was used, as can be seen in the following order of operations. The feed also had to be fine, to avoid a large teat, as the cut-off tool forming such a round head would cause the piece to break off before it had been entirely cut off.

Order of Operations	Revolutions	Hundredths
Feed stock to stop	29	$2\frac{1}{2}$
Revolve turret	29	$2\frac{1}{2}$
First roughing box-tool — 0.500-inch rise at 0.005-inch feed	100	$8\frac{1}{2}$
Revolve turret	29	$2\frac{1}{2}$
Second roughing box-tool — 0.500-inch rise at 0.005-inch feed	100	$8\frac{1}{2}$
Revolve turret	29	$2\frac{1}{2}$
Finishing box-tool — 0.500-inch rise at 0.005-inch feed	100	$8\frac{1}{2}$
Revolve turret	29	$2\frac{1}{2}$
Form — 0.510-inch rise at 0.0015-inch feed	340	29
Cut-off — 0.332-inch rise at 0.0009-inch feed	383	33
Revolve turret twice while cutting off	(58)	(5)
Total number of revolutions to make one piece	1168	100

The spindle speed used was 549 revolutions per minute, so that the time to make one piece was 135 seconds, gross product in ten hours, 266 pieces. The new method of making this piece is shown at *B* in Fig. 3. The form tool travels the same distance as when using the method shown at *A*, but a much finer feed is employed on account of the greater width of the form tool. No time is lost, however, as one piece is being cut off at the same time that another piece is being formed. It might be well to mention that no trouble was experienced by feeding the stem out against the stop; that is, the stem *b* did not bend or become distorted in any way.

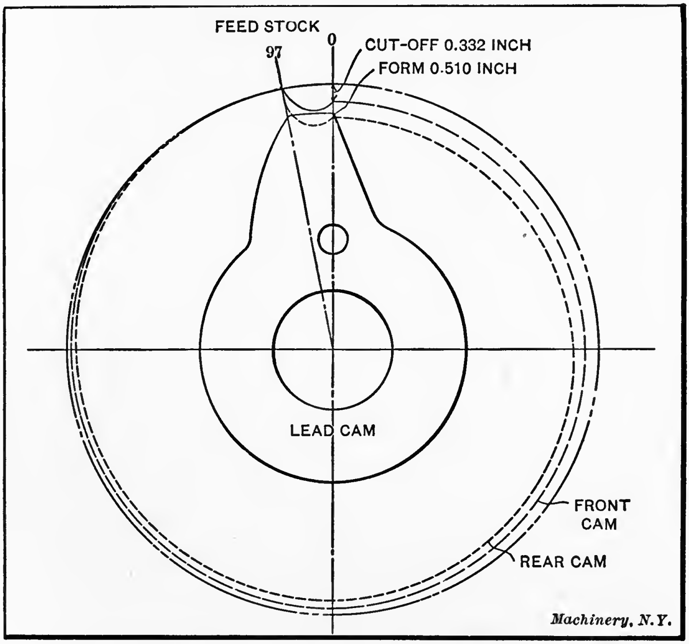

Fig. 4. Cams for Making the Piece shown in Fig. 3 by the Method shown at B

By comparing the following order of operations with those previously given, it will be noticed that there is considerable increase in production, and also that the work is handled more expeditiously.

Order of Operations	Revolutions	Hundredths
Feed stock to stop	16	3
Cut-off — 0.332-inch rise at 0.0007-inch feed	503	97
Form — 0.510-inch rise at 0.001-inch feed	(503)	(97)
Revolve turret five times	(80)	(15)
Total number of revolutions to make one piece	519	100

The speed of the spindle was 519 revolutions per minute, giving a maximum surface speed of 84 feet per minute. The time required to make one piece was 60 seconds, giving a gross product of 600 pieces in ten hours. This is a considerable increase as compared with the 266 pieces obtained by the method shown at *A*, and the gain is not made by "hogging" out the work, because the feeds are finer and the work is better.

The cams used for the operation shown at *B* in Fig. 3 are shown in Fig. 4. The cut-off and form cams start at 0 hundredths and finish at 97 hundredths on the cam circle. The form cam is shown by the dotted lines and the cut-off by long dashes; and the lead cam by a full line.

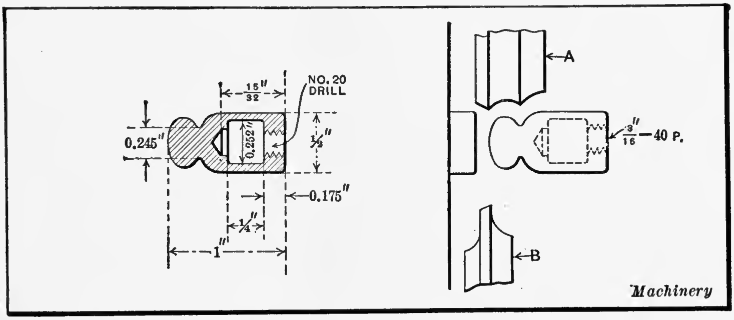

Fig. 5. Piece to be Made — Arrangement of the Circular Tools

Another piece on which the production was increased considerably is shown at *E* in Fig. 2. This is a thumb-screw made from 1-inch machine steel on a 7/8-inch Cleveland automatic screw machine, which had been changed to take 1-inch stock. This piece was first made on a Cleveland automatic having a single-acting cross-slide, that is, the front and back tools were mounted on the same slide and could not be operated independently. The order of operations for making this screw by this method is as follows:

Order of Operations	Revolutions	Seconds
Feed stock to stop	30	6
Form	275	55
Knurl from turret	100	20
Thread on and off	40	8
Cut-off	300	60
Total number of revolutions to make one piece	745	149

This order of operations gave a gross product of 240 pieces in ten hours. To increase the production of this piece, it was transferred to a Cleveland machine which had a double independent cross-slide, thus enabling the cut-off and form tool to be operated at the same time. A cross-slide knurling tool was also used on the cross-slide, obviating the necessity of putting it in the turret. The order of operations for this piece is as follows, and it can be seen that a considerable increase was the result of this change.

Order of Operations	Revolutions	Seconds
Feed stock to stop	30	6
Cut-off	300	60
Knurl, attached to cut-off tool	.....	.....
Form, while cutting off	(275)	(55)
Thread on and off	40	8
Total number of revolutions to make one piece	370	74

The gross product by this method was 486 pieces in ten hours, or over twice that of the previous method.

A Recessing Operation. — The piece shown in Fig. 5 gave considerable trouble before it was made successfully on the automatic screw machine. This piece was made from machine steel $\frac{1}{2}$ inch in diameter, in a No. 0 Brown & Sharpe automatic screw machine. In considering the speed, it was found that for forming the stock could run at about 80 feet per minute, and at 30 feet per minute for thread cutting. Therefore, the spindle speeds required are 611 and 603 revolutions per minute, respectively, but, by referring to the table, it will be found that the nearest spindle speed is 663 revolutions per minute.

The recessing is performed with a Brown & Sharpe standard swing tool, which is the tool usually selected for this class of work. The recessing cutter is first fed at right angles to the spindle by the cross-slide, after which it is fed forward by the turret. The feeds given in the following were found to be sufficiently light, and the tools stood up well without continual sharpening.

The method of setting the circular tools on the machine is shown to the right in Fig. 5. The circular form tool *A* is located on the back-slide, and the cut-off tool *B*, on the front-slide. The form tool operates while the hole is being drilled; this is practicable, because the smallest diameter to be formed is 0.245 inch, while the diameter of the drilled hole is 0.161 inch. The surface speed of the drill is only 28 feet per minute, as the machine spindle cannot be run faster on account of threading. Some operators prefer a high-speed drilling attachment for this kind of work. The order of operations for making this piece is as follows:

Order of Operations	Revolutions	Hundredths
Feed stock to stop	13	3
Form — 0.128-inch rise at 0.001-inch feed	(128)	(29)
Revolve turret	13	3
Center — 0.090-inch rise at 0.005-inch feed	18	4
Revolve the turret	13	3
Drill — 0.512-inch rise at 0.004-inch feed	128	29
Revolve the turret	13	3
Recess — 0.050-inch rise at 0.0028-inch with rear cross-slide	18	4
Recess from turret — 0.250-inch rise at 0.0051-inch feed	49	11
Drop back rear cross-slide	9	2
Revolve turret	13	3
Thread in	9	2
Thread out	9	2
Cut-off — 0.274-inch rise at 0.002-inch feed	137	31
Revolve turret twice	(26)	(6)
Total number of revolutions to make one piece	442	100

With this lay-out, a piece is made every 40 seconds, which means a gross production of 900 pieces in ten hours. The cams for this piece are shown in Fig. 6 and consist as usual of the lead, front-slide, and back-slide cams. It will be noticed that the rear-slide cam has a lobe of from 45 to 60 on the cam circle. The use of this portion is as follows: At 45 the recessing tool is brought into place by the lead cam, the rear-slide cam moves forward 0.050 inch, feeding the recessing tool in to take the depth of chip required. Then at from 49 to 60 the form cam has a dwell while the recessing tool moves forward; the allowance from 60 to 62 is made to withdraw the back slide before withdrawing the swing tool.

Drilling and Counterboring from Cross-slide. — Hand screw machine operations are frequently performed on work partly made in the automatic machines, because in order to complete the work in the automatic machine it would require seven tools, which exceeds the number of holes in the turret of a

Brown & Sharpe automatic screw machine. At *A*, in Fig. 7, is shown a piece of work knurled on one end, which was made in a No. 2 Brown & Sharpe automatic screw machine. Unless a combination counterbore is used, the list of turret tools required will be a stop, center, drill, reamer, two counterbores, and a knurl.

The method used in holding the extra counterbore is shown at *A* in Fig. 8. The counterbore is held in a holder placed on the cross-slide, and when the counterbore is in line with the hole in the work it is fed forward by means of the stop in the turret coming against the rear end *a* of the counterbore. The counterbore is made a good sliding fit in the hole in the boss, and is prevented from turning by the headless screw *b*. A pin driven into the shank of the counterbore and a helical spring assist in keeping the counterbore in the "back" position.

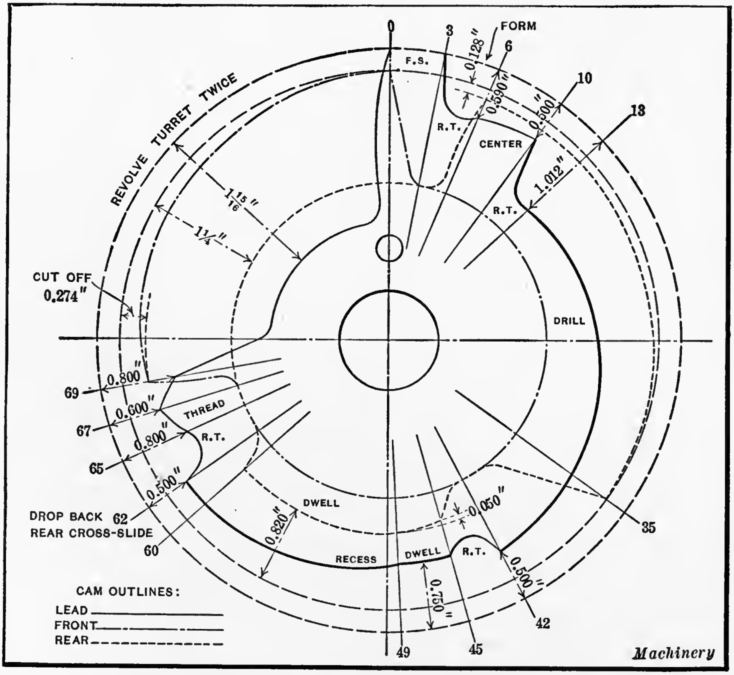

Fig. 6. Cams used in Making the Piece shown in Fig. 5

The order of operations for producing the piece shown at *A* in Fig. 7 is as follows:

Order of Operations	Revolutions	Hundredths
Clearance	19.6	2
Feed stock to stop	19.6	2
Revolve turret	19.6	2
Center — 0.125-inch rise at 0.0063-inch feed	19.6	2
Revolve turret	29.4	3
Drill — 0.500-inch rise at 0.0056-inch feed	88.2	9
Revolve turret	29.4	3
Ream — 0.500-inch rise at 0.0072-inch feed	137.2	14
Revolve turret	29.4	3
Counterbore — 0.150-inch rise at 0.0014-inch feed	107.8	11
Revolve turret	29.4	3
Knurl on — 0.300-inch rise at 0.0102-inch feed	29.4	3
Knurl off — 0.300-inch rise at 0.0153-inch feed	19.6	2
Revolve turret	29.4	3
Advance front slide and dwell	88.2	9
Counterbore from cross-slide — 0.125-inch rise at 0.0021-inch feed	(58.8)	(6)
Clearance	(19.6)	(2)
Cut-off — 0.477-inch rise at 0.00167-inch feed	284.2	29
Total	980.0	100

The cams for producing the piece shown at *A* in Fig. 7 are shown in Fig. 9, where the various functions of the lobes are clearly indicated. The most interesting lobe on this set of cams is the lobe on the cross-slide cam from 63 to 71, which brings the special counterbore shown at *A* in Fig. 8 in line with the hole in the work. The stop in the turret used for feeding in this counterbore, and which is also used for gaging the stock to length, is operated by the lobe from 63 to 69 on the lead cam. It will be noticed that this lobe is much lower than the lobe from 2 to 4 gaging the stock to length, the reason being that the counterbore projects much further from the chuck than does the stock when fed out.

Another simple method of holding an extra tool on the cross-slide is illustrated at *B* in Fig. 8. Here the holder is made so that it will take either a drill or a counterbore, which is held in it by means of a headless screw. The tool is rotated by means of the grooved pulley *c*, which is fastened to the spindle *d* as shown. This pulley is driven from the overhead works by a round belt, which is left sufficiently slack to allow the front cross-slide to advance to a position in line with the work.

The drill is fed forward by a stop held in the turret, and is withdrawn by the coil spring *e*.

Other operations performed with drills and counterbores held on the cross-slide are shown in Fig. 7 at *B*, *C*, *D*, and *E*, respectively. At *C* is shown a piece made with an eccentric hole. This is easily produced by means of a drill held in a holder fastened to the cross-slide. It is necessary to lock the spindle when the hole is being drilled. A drill-holder similar in construction to that shown at *B* in Fig. 8 is used. The piece shown at *C* is made with holes having different degrees of eccentricity; otherwise the pieces made with an eccentric hole are of the same size and shape. It is interesting to compare this method of drilling with the old method, which con-

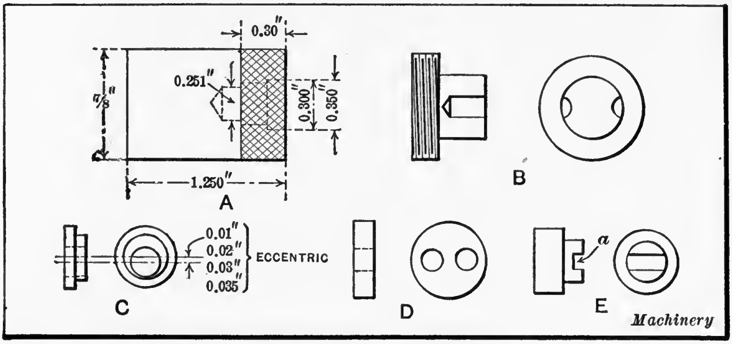

Fig. 7. Samples of Work operated on by Counterbores and Drills held on the Cross-slide

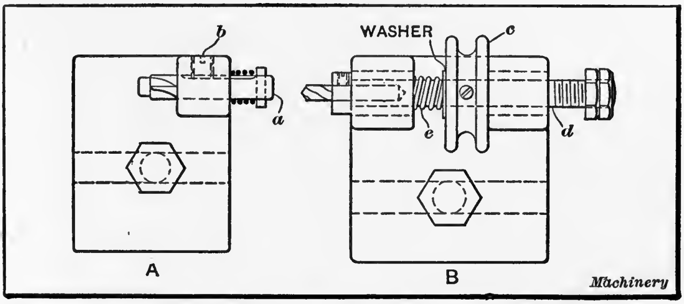

Fig. 8. Holders for Carrying Drills and Counterbores on the Cross-slide

sisted in holding the stock in an eccentric chuck or in drilling each piece in a drill jig. The method last mentioned is expensive, and the eccentric chuck method is very destructive to the cut-off tools, owing to the pounding of the stock against the cutting edge.

At *B* is shown how wrench slots were produced in a special nut. The holes were first drilled, after which the shank was turned down by means of a box-tool, leaving only one-half of the drilled holes in each side. To produce this piece, the cross-slide cam moves the drill and holder forward part way, then dwells while the first hole is being drilled, by means of a stop in the turret forcing the drill into the work. After the first hole is drilled, the cam advances into position for the second hole, when the same operation is repeated. At *D* is shown a washer provided with two holes which were also drilled

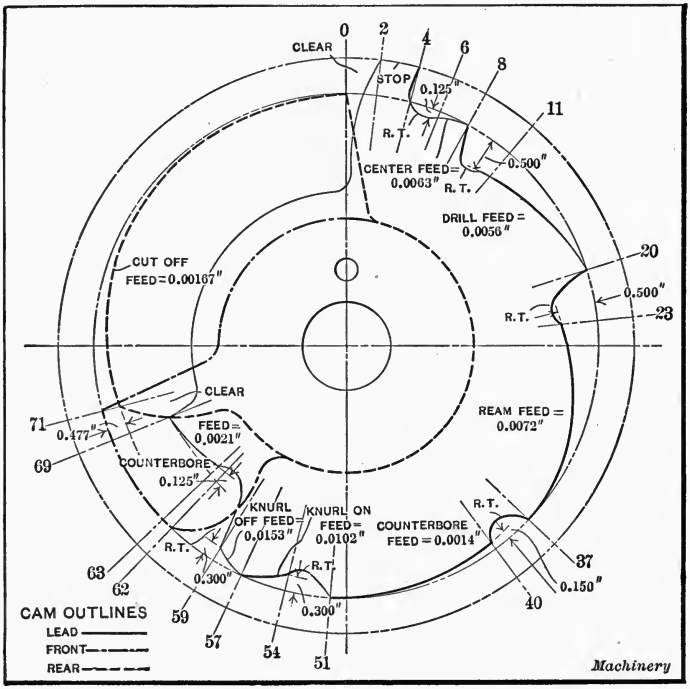

Fig. 9. Cams used in Producing the Piece shown at A in Fig. 7

in this manner. At *E* is shown a piece which requires a different movement. The lead cam is not used at all, and the groove *a* is cut by a special tool held on the cross-slide. After the machine spindle is locked in position by means of the brake, this tool starts at one side and is fed across by the cross-slide cam. These special operations give little trouble, especially on brass work, the material from which the parts described were made.

Making Watch Parts in the Screw Machine. — Watchmaking by automatic machinery is essentially an American development. Previous to the inauguration of the industry in Waltham, Mass., Switzerland held the lead in the manufacture of watches on a large scale. The hand processes there followed are the result of long experience and careful study, and the work is highly organized so far as the division of labor is concerned, separate workmen specializing on single operations, which they repeat day after day. Swiss watches are not handmade in the sense in which we apply that term to custom-made footwear, for instance. Lathes, presses, gear- and pinion-cutters, and other power-operated machines are used in the various operations required. These tools have, however, been largely operated by hand in the same way that ordinary engine lathes are operated, as distinguished from the mechanically-controlled movements of the automatic gear-cutter or screw machine.

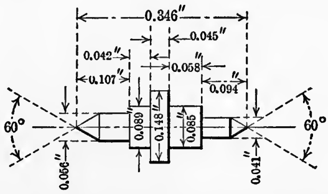

Fig. 10. Blank for Watch Pinion made by Forming from Tool-steel Stock

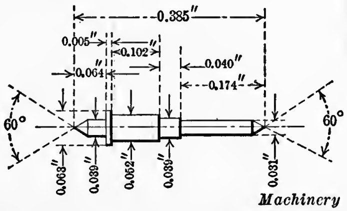

Machinery

Fig. 11. Blank for Watch Wheel Staff made by Turning from Tool-steel Stock

In American watchmaking practice the automatic principle has been developed to an extent that is little short of marvelous, the parts not only having complicated operations performed on them in single machines, but even being transferred from one machine to another automatically, through a long series of operations. The various manufacturers of watches

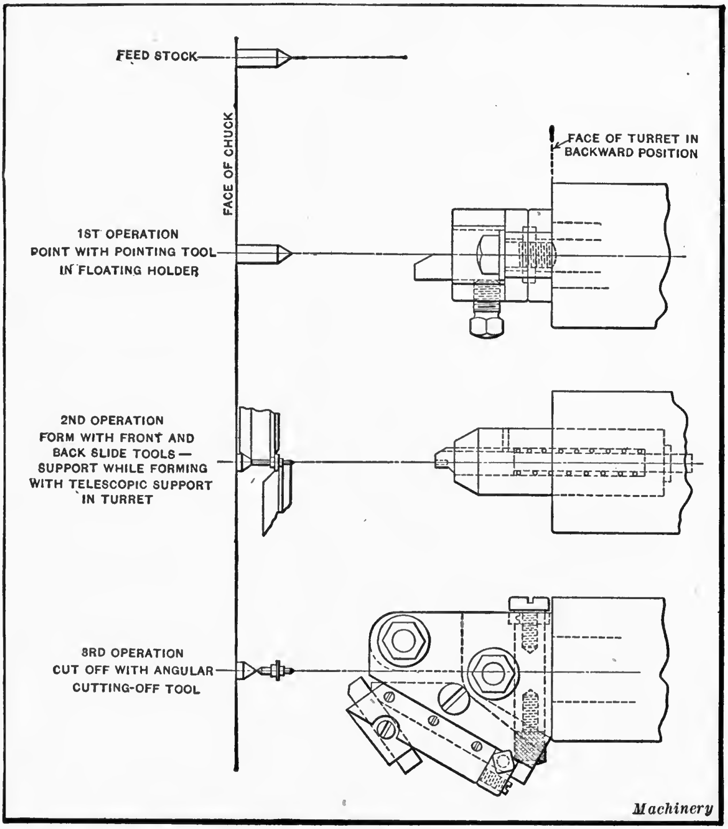

Fig. 12. Tools used and Order of Operations followed in Making the Pinion Blank shown in Fig. 10

in this country have, as a rule, each developed their own machinery, although the automatic screw machines made by the Brown & Sharpe Mfg. Co. have been invading this highly specialized field of watchmaking. These machines have also met with considerable favor in the Swiss watchmaking field, committed though it is by years of precedent to the use of the hand-operated machine. The particular work for which this tool has been applied is in the turning of the larger pinion blanks and staffs (the slender shafts or spindles on which gears and pinions are mounted). These parts have to be made with a high degree of accuracy, both as to their dimensions and as to their concentricity, or the trueness with which they run on centers.

Tools and Operations for Making a Pinion Blank. — The part shown in Fig. 10 is one of the larger pinion blanks used in a Swiss watch. In making it by the old-fashioned methods, a blank is cut off and formed at each end with the cone points shown, which are supported in female centers in the lathe, where successive cuts are taken to bring it to the required dimensions, the same as would be done for much larger work in the engine lathe. This operation is practically duplicated in the automatic screw machine, so far as turning on centers is concerned.

The order of operations and the tools used for each of them may be followed from Fig. 12. The first operation is the feeding of the stock. No stop is used for the stock to feed against, the feeding mechanism being accurate enough to always leave a few thousandths of stock for the first operation, which is that of pointing the end of the bar to form the outer cone-shaped pivot point of the work. This is done by a tool mounted in a "floating" holder, which may be firmly clamped in the proper position for forming an accurately pointed pivot each time the machine is set up. With this tool, the accurate alignment of the turret with the axis of the spindle is not absolutely necessary; in fact, no alignment accurate enough for this purpose could be permanently maintained. This piece of work is short and stiff enough so that it can be turned entirely by circular forming tools mounted in the cross-slide. These forming tools are shown at work in the second operation in Fig. 12. The one in the front cross-slide turns the two diameters forward of the largest diameter on the work, while the rear cross-slide turns the two diameters on the other side of the collar, and rough-turns the protecting end of the stock for the cone point of the next part to be made. While these operations are in progress, the outer end of the work is supported in a delicate female center, in a spring plunger held in the turret. It was stated that this part is practically turned on centers. The significance of this statement will be understood by studying the second operation, and the succeeding or third operation. Since the outer end of the work is supported by the center while the forming is in progress, the diameters thus turned must be true with that center. In the third operation, the center at the other end of the work is formed. The forming of this center is shown in Fig. 13. The blade follows a diagonal line of travel, so that the center is turned to the right angle. Face *a* is beveled so that it clears the work entirely, and the point is quite sharp. The cutting action is thus entirely on the face of the stock, and the work is not subject to any pressure whatsoever, but remains attached to the stock until the tool has progressed so far that it separates and falls off by its own weight, leaving the point so sharp as to be for all practical purposes a perfect one. The outside diameter of the piece is left stock size. This large diameter has the pinion teeth cut in it and runs true enough for all practical purposes.

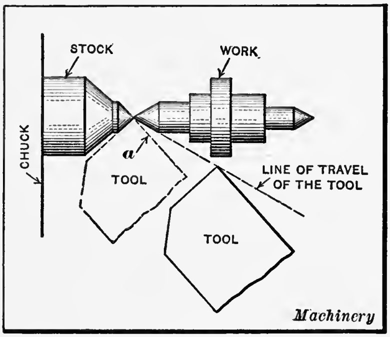

Fig. 13. The Cone Point Turning and Cutting-off Operation

Cone-point Turning and Cutting-off Tool. — The construction of the point turning tool is shown in Fig. 14. The cutting-off blade *B* is held in a slot in tool-slide *C* and rests on adjusting screw *D* and pin *E*. It is clamped in position by screw *F*. By adjusting screw *D*, the blade is rocked about pivot *E* to bring the point higher or lower as may be required to accurately center it with the axis of the work. Slide *C* is gibbed to a dovetail guide on slide carrier *G*. This member is pivoted to the body of the tool *H* about the axis of bolt *J*, and is clamped by screw *K* in the proper location to guide the slide *C* in forming the desired angle for the pivot of the work.

Tool-slide *C* has attached to it a rack which meshes with the 32-pitch pinion *L*, pivoted to the under side of *G*. Pinion *L* meshes with a similar pinion *M*, pivoted in a hole in the body of the tool about the center of bolt *J*, so that the correct relations between them are preserved whatever the angular adjustment of *G* on *H*. Pinion *M* is lengthened and at its lower extremity meshes with rack teeth cut in the side of plunger *N*. This is best seen in the section on line *xx*. This plunger, as may be seen in the side elevation, has at its front end a projection extending upward bearing against a plunger *O* in a hole above it, which is pressed outward by a spring. By this means, *N* is normally kept at the outer end of its movement, being limited in this direction by the seating of screw *P* in the recess

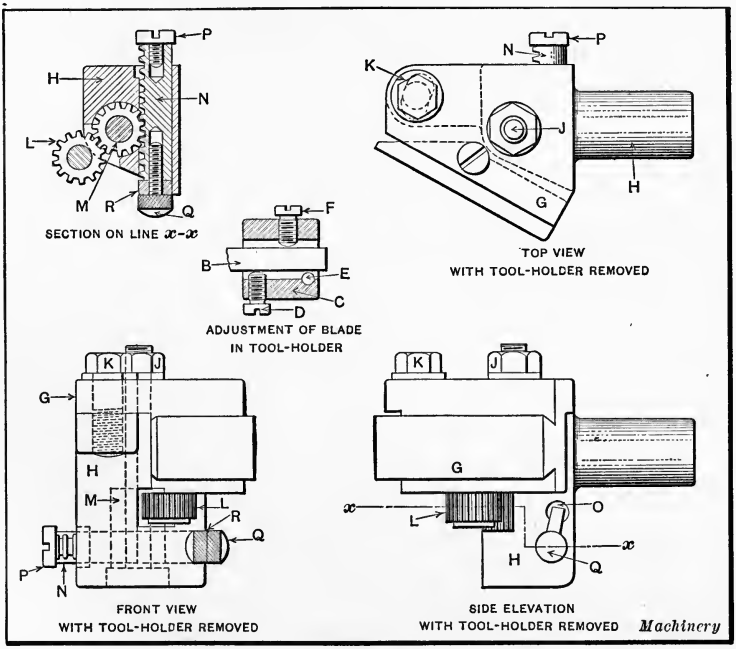

SECTION ON LINE *x*-*x*

TOP VIEW
WITH TOOL-HOLDER REMOVED

ADJUSTMENT OF BLADE
IN TOOL-HOLDER

FRONT VIEW
WITH TOOL-HOLDER REMOVED

SIDE ELEVATION
WITH TOOL-HOLDER REMOVED

Machinery

Fig. 14. Construction of Cone Point Turning and Cutting-off Tool

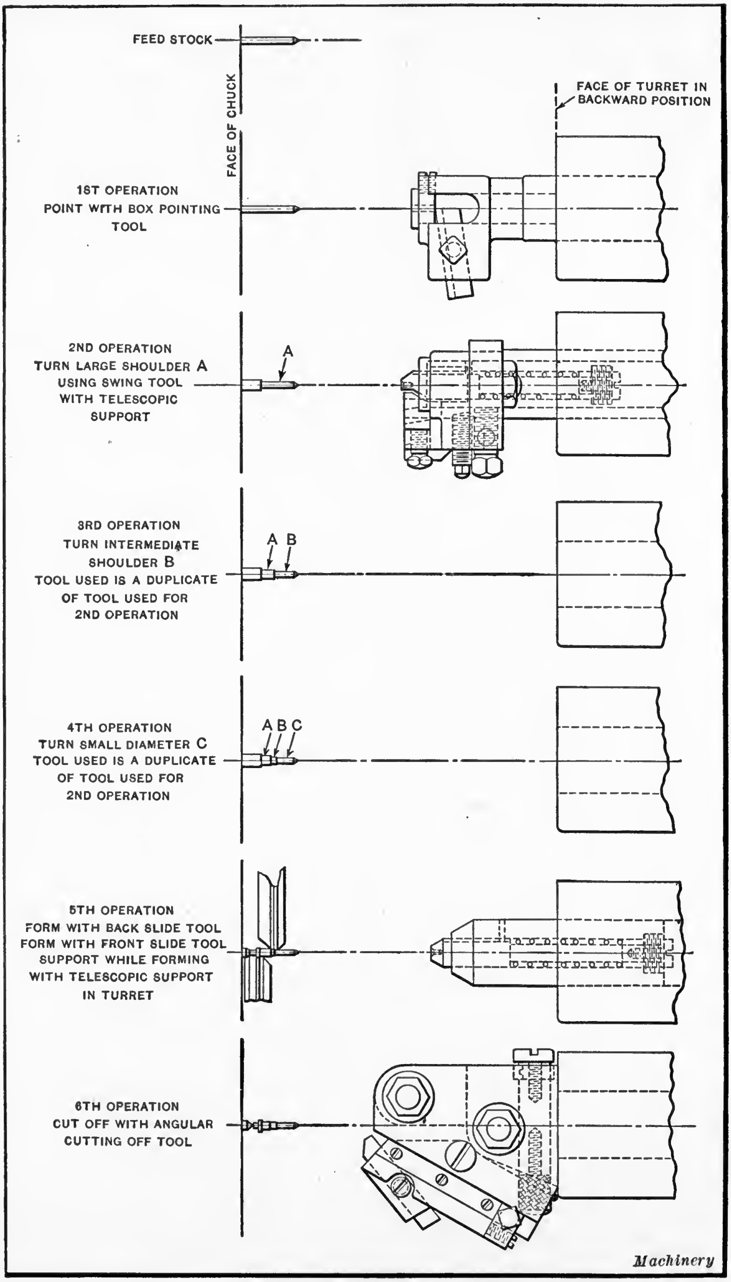

Fig. 15. Tools used and Order of Operations followed in Making the Staff shown in Fig. 11

provided for it in the body *H* of the tool. In this position, the tool-slide is withdrawn so that the blade clears the work.

The front end of *N* is provided with knurled screw *Q* and lock-nut *R*. These are so located as to be in line with a pusher or raising plate attached to the front cross-slide of the machine, when the turret has brought the tool to the proper position for cutting off. The cutting off is effected by the movement of the cross-slide. The pusher bears on screw *Q*, presses plunger *N* inward, revolving pinions *M* and *L*, which, in turn, acting on the rack attached to the tool-slide, move cutter *B* inward, severing the work from the bar and forming the pivot point, as shown in Fig. 13. The length of the inward travel of the tool is adjusted by screw *Q* and lock-nut *R*. The swiveling adjustment of the pusher plate is not needed for this job.

Cams for Making Pinion Blank. — At *A*, *B*, and *C* in Fig. 16 are shown the cams by which the feeding movements of the machine are effected for performing the operations shown in Fig. 12. As is well known, the Brown & Sharpe automatic screw machine has a front and a back cross-slide and a turret-slide, each controlled by its own separate plate cam. In Fig. 16 the various radial lines are figured to show their distance from the starting point 0, in hundredths of a circle. The various acting surfaces of the cams are marked to indicate the operations performed by them. The material used for this pinion blank is tool steel. The spindle revolves 1320 revolutions per minute, giving a surface speed to the work of about 58 feet per minute, which is suitable for the material used with the heavy flow of oil directed on the cutting edges of the tools. It takes 770 revolutions to make a piece, so that each hundredth of a revolution of the cam represents 7.7 revolutions of the spindle. Knowing this, the various feeds can be readily figured out. On the back-slide cam, which takes the wider of the two forming cuts, a finer finishing feed is used between positions 60 and 72½ than for the first portion of the forming between 20 and 60. This is done to produce the finer finish which the finer feed gives. It will also be noticed that in all forming operations, such as those performed by the

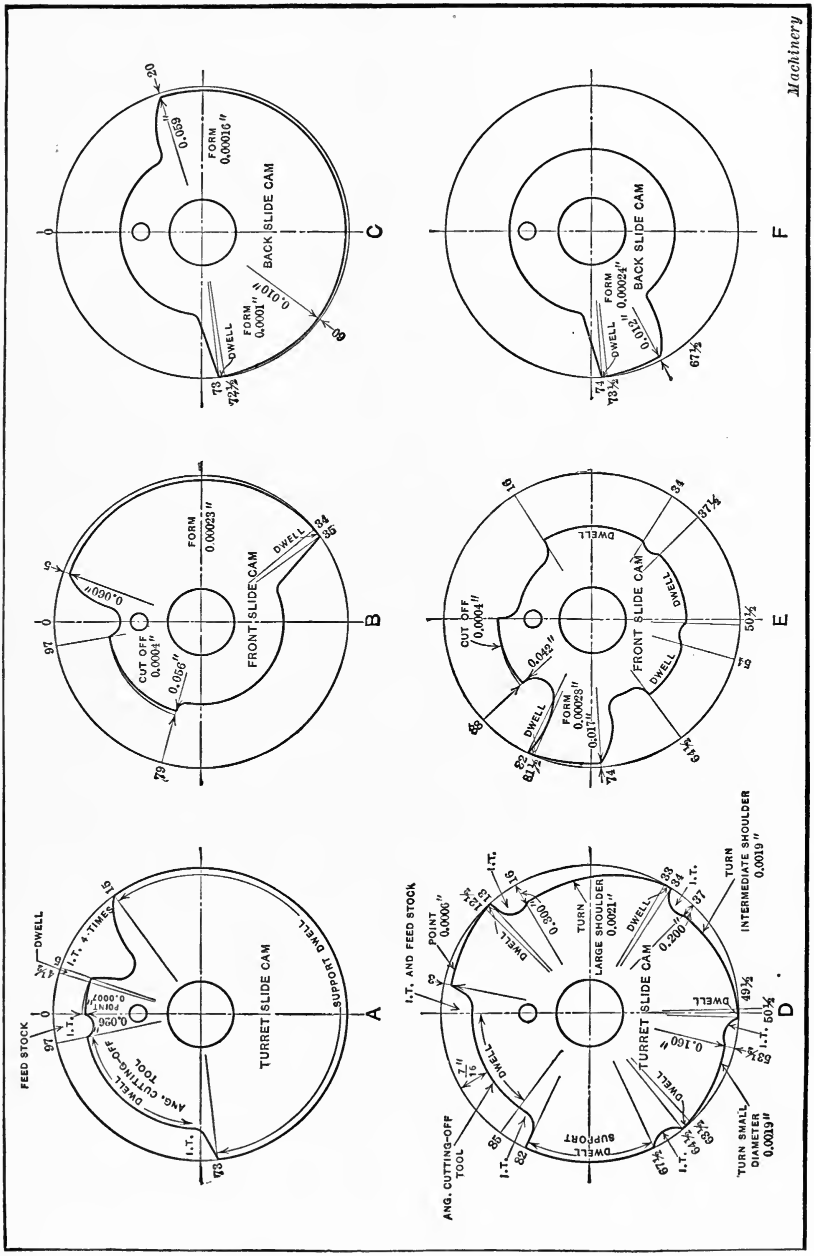

Fig. 16. Turret and Cross-slide Cams for Making the Watch Parts shown in Figs. 10 and 11

two cross-slides, and by the turret-slide in pointing the work in the first operation, the cams are provided with "dwells," or resting places where the periphery of the cam is, for a short space, a portion of the circumference of a circle, so that the slide is allowed to rest at this point while the chip runs out. This produces a smooth final finish. The net production is 900 per day, allowing time for sharpening tools, etc.

Tools and Operations for Making a Watch Staff. — The part shown in Fig. 11 has to be handled somewhat differently from the one just considered. It is much longer and more slender, and cannot be formed by cross-slide tools. The order of operations is indicated in Fig. 15. The stock, having been fed to length, is pointed by the turret tool shown in the first operation. In this tool the stock is supported by a bushing while the end is being pointed, the work being too slender to support itself, as in Fig. 12. In the second operation, shoulder *A* is turned. This is done by a swing tool. The pointed end is supported in a female center, a turning cut is taken over the shoulder of the finished diameter required, the cutting blade is released so that it is not dragged over the work on the return, and then the turret is revolved for the next operation. Operations 3 and 4 are also performed by the same kind of a tool and in the same way, shoulders *B* and *C* being each finished in turn. It will be noticed that the smallest diameter is finished last. If shoulder *C* were turned first to its finished size, it would not be stiff enough to support the succeeding cuts *A* and *B*, with assurance that they would be true with the cone-pointed end.

In the fifth operation, the work is supported in a female center while formed tools in the front and rear cross-slides square up the shoulders already turned, and remove the burrs caused by the turning tools. The front cross-slide tool forms the small diameter to the left of the collar and squares up the sides of the collar itself. As will be seen from a study of the cams *D*, *E*, and *F*, Fig. 16, the front cross-slide tool does not begin to cut until the one in the rear has completed its work. The stock is too slender to permit of too much work being done on it at once. In the sixth operation, the same angular cutting-off tool as shown in Fig. 14 is used for severing the work from the bar and forming the cone point at the same time. It will be seen that in the operations just described, as in the previous case, the various diameters will be as concentric with the pointed centers of the work as if they had been turned on them.

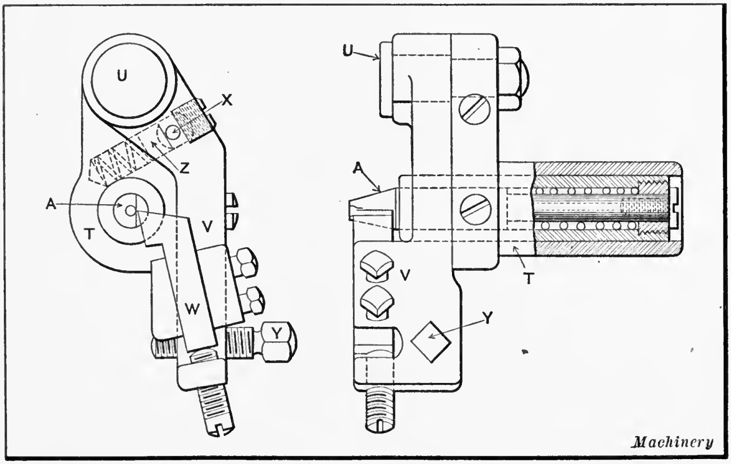

Fig. 17. Swing Tool used for Operations on Part Shown in Fig. 15

Operation of the Swing Tool. — The swing tool used in Operations 3, 4, and 5 in Fig. 15 is shown in Fig. 17. To the body *T* of the device is pivoted (about stud *U*) the tool-holder *V*, carrying blade *W*, which is adjusted vertically and clamped by the square-headed screws shown. In a hole drilled into the body of the tool is contained a plunger *Z* pressed outward by a spring. The opening of this hole is closed by a screw, as shown. A pin *X* driven into the side of tool-holder *V* projects through a side hole into *T*, and bears on the face of plunger *Z*. By this means, the spring keeps *V* swung outward, the movement being limited by the bearing of *Z* on the headless set-screw. Abutment screw *Y*, in part *V*, is in position to bear against the pusher or raising plate carried by the cross-slide.

In turning shoulders *A*, *B*, and *C* (Fig. 15), the movements of the front cross-slide and turret-slide cams are so arranged that the swing tool is brought up to the work; the cross-slide is next moved in to set the tool *W* to the diameter desired, as determined by the adjustment of screw *Y*; then the swing tool is fed forward the proper distance for the shoulder. The front cross-slide is next withdrawn, allowing tool *W* to swing outward under the influence of the spring and plunger *Z*. The turret-slide then retreats, drawing the blade out of the way without allowing it to drag on the work. The swivel adjustment on the raising plate allows either straight or taper turning to be done, as required.

The Cam Equipment. — The cams, shown at *D*, *E*, and *F* in Fig. 16, for making the part shown in Fig. 11 appear to be somewhat complicated, but the operations may be easily followed. The various lobes of the three cams are marked for the operations for which they are intended. The abbreviation "I. T." means "index turret," and the term "dwell" indicates a concentric portion of the cam, where the slides are at rest. In making this piece, the spindle revolves at 2400 revolutions per minute. The stock is 0.063 inch in diameter, which gives a surface speed of about 40 feet per minute. The material is tool steel. The net production for these pieces was 1500 per day. The total revolutions to make one piece is 840, so that each hundredth on the periphery of the cams represents 8.4 revolutions.

Examples of Work on Cleveland Automatic. — The successive operations for producing the parts shown in Fig. 18, on the Cleveland automatic, will be described. The special chrome-nickel steel sleeve shown at *A* requires drilling, forming, recessing, and tapping. A 3¼-inch model *A* machine with a No. 4 spindle drive is used. As shown in Fig. 19, the operations are in the following order:

1. Gage the stock to length by a gage stop *A* in the first hole in the turret.

2. Index the turret and rough-turn the large diameter with cutter *a*, using an overhanging turning attachment *B*, and at the same time drill a large hole full depth, using a drill

and split holder *C* in the second hole in the turret; time of operations, 3 minutes 35 seconds.

3. Index the turret and finish-turn the large diameter with the second cutter *b* held in a turning attachment, and at the same time counterbore a large hole, using a counterbore and holder *D* held in the third hole in the turret. As no tools are in the way on the front side, forming tools *E* and *F* can be brought into operation to face the end and to form the rear diameters, using flat forming tools and a toolpost, and an open-side toolpost on the front of the cross-slide. The time for these operations is 4 minutes 30 seconds.

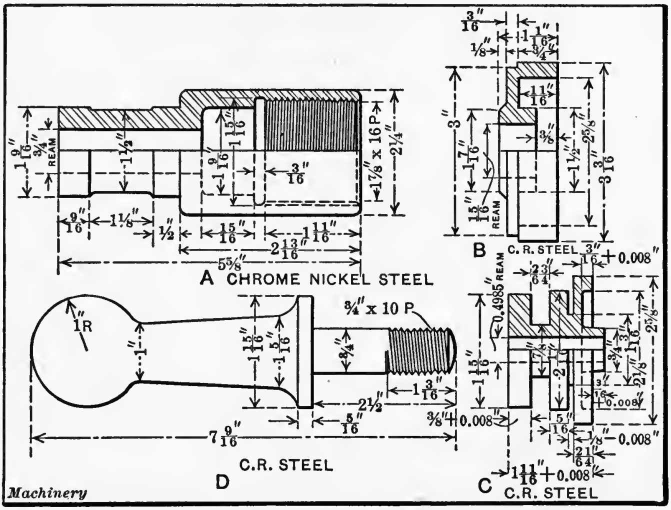

Fig. 18. Examples of Work done on Cleveland Automatic

4. Index the turret and drill a small hole, using a drill and split holder *G* in the fourth hole in the turret. Time of operation is 2 minutes 15 seconds.

5. Index the turret, recess, using a recessing tool and holder *H* in the fifth hole in the turret. The operating cam for effecting a movement of the recessing tool is held on the front of the cross-slide. Time of operation is 1 minute 25 seconds.

6. Index the turret and bring the tap-holder *I* and tap held

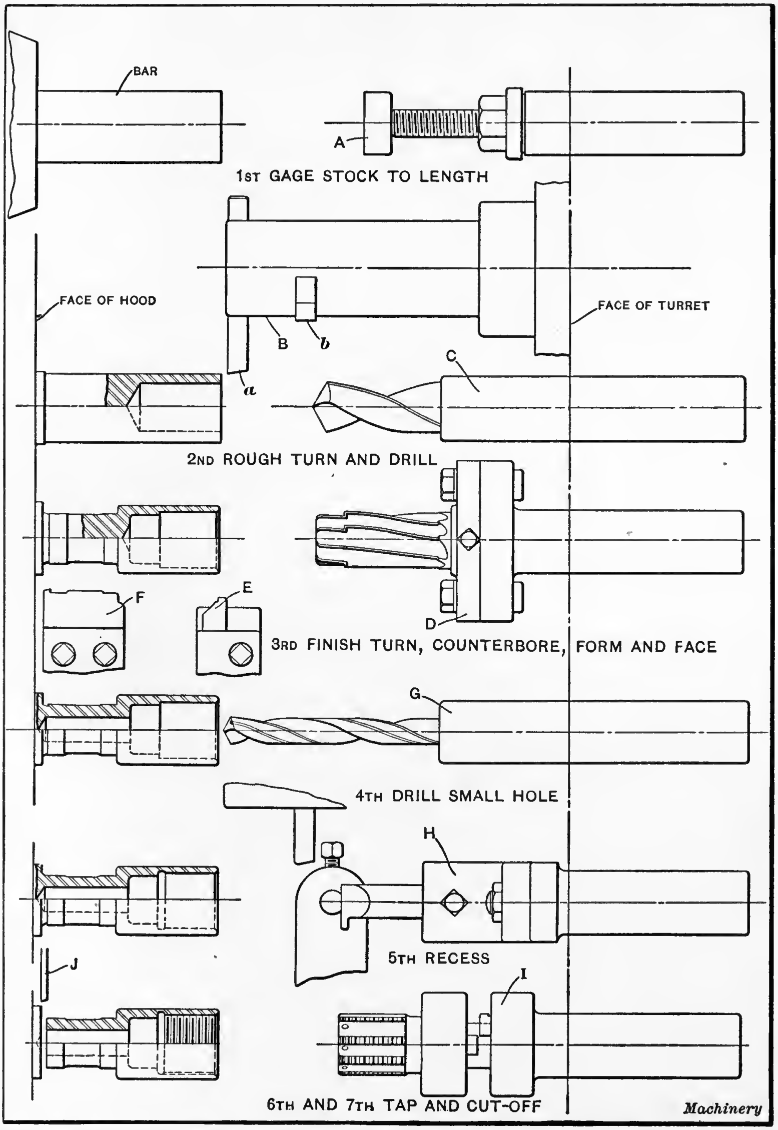

Fig. 19. Tool Equipment and Operations for Making a Chrome-nickel Steel Sleeve on a "Model A" Cleveland Automatic

in the sixth hole into operation. The time for threading this piece is 1 minute 45 seconds.

7. Cut off, using the cut-off blade *J* held in a universal cut-off toolpost on the rear of the cross-slide. Time for operation is 1 minute 30 seconds.

The total time for the entire operations enumerated, including the idle motions of the machine, is 15 minutes. When the tools have been set in their proper relation to each other, and the feed-regulating cams have been so adjusted as to give the proper feeds for the various tools, the position of the various cams is noted and recorded on a chart. All the tools used are also recorded on this chart, so that the machine can easily and quickly be equipped and adjusted for reproducing this same part, if necessary, at any future time.

Another comparatively simple piece of work to produce on the Cleveland automatic is shown at *B* in Fig. 18. The successive operations are shown in Fig. 20, the machine being a $3\frac{1}{4}$-inch Model *A*, using the No. 1 drive:

1. Feed the stock to stop *A*, which is held in the first hole in the turret.

2. Index the turret and drill a hole full depth, using a drill-holder *B* in the second hole in the turret. Time for operation, 50 seconds.

3. Index the turret and finish-turn the outside diameter with an overhanging turning attachment *D*, carrying two cutting tools — tool *a* for roughing and tool *b* for finish-turning. At the same time, counterbore the hole, using a counterbore held in holder *E* in the third hole in the turret, and form and face with tools *F* and *G* which are held on the front part of the cross-slide, using a post with flat cutters and spacing blocks to locate them the correct distance apart. Time for the operation, 3 minutes 55 seconds.

4. Index the turret and finish-turn with the second cutter *b* in an overhanging turning attachment *D*, and ream the hole, using a reamer and floating holder *H* carried in the fourth hole in the turret. The time for these two operations is 18 seconds.

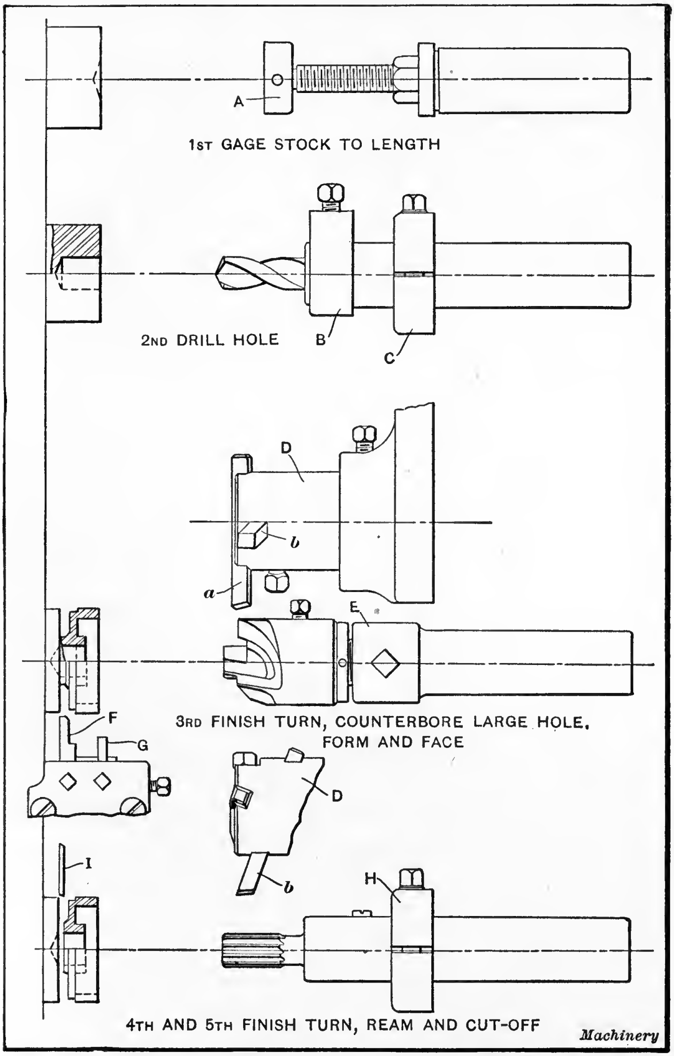

Fig. 20. Tools for Making a Clutch Case on a "Model A" $3\frac{1}{4}$-inch Cleveland Automatic

5. Index the turret and cut off with a universal cut-off tool blade *I* and post held on the rear of the cross-slide. Time, 32 seconds.

The total time, including the idle motions for chucking, advancing, and withdrawing the turret and indexing, is 5 minutes 35 seconds. The arrangement of the forming and cutting-off tools is shown in Fig. 23. All the data obtained from the setting-up of this job are recorded on the operation sheet, as well as any particular features necessary to turn out this job more effectively. All the tools and attachments are noted under the various headings on the sheet, as well as the size of the pulleys, number of pins in the regulating drum, and other points regarding the proper setting-up of the machine.

In producing the twin gear blank shown at *C* in Fig. 18, the greatest amount of work is done from the cross-slide. The drilling depth is considerable, so that the best way to lay out this job would be to use two drills, one going in part way and the other the remainder of the distance. The operations on a $3\frac{1}{4}$-inch Model *A* machine with a No. 1 drive are as follows:

1. Gage the stock to length by a stop *A* (Fig. 21) held in the first hole in the turret.

2. Index the turret and turn part way with a tool *a* in an overhanging turning attachment *B* carrying two turning tools, and drill part way, using a high-speed drill held in holder *C* in the second hole in the turret. Time for the two operations, 40 seconds.

3. Index the turret and finish-turn, using the second cutter *b* in an overhanging turning attachment *B*, and drill full depth, using a high-speed drill-holder *D* held in the third hole in the turret. At the same time, advance tools *E* and *F* held on the front of the cross-slide and start forming the rear diameters. Also take a cut on the front face, using tool *F* and an open-side toolpost on the front of the cross-slide. Time for operations, 1 minute 55 seconds.

4. Index the turret and ream a hole, using a reamer held in a high-speed drill-holder *G* in the fourth hole in the turret. The use of two drills on a hole of this depth avoids the necessity of using a boring tool, and the reamer in this case can be held in a rigid instead of a floating holder. At the same time that the hole is being reamed, three cutting blades *H*, held on the rear of the cross-slide and separated by flat spacing blocks,

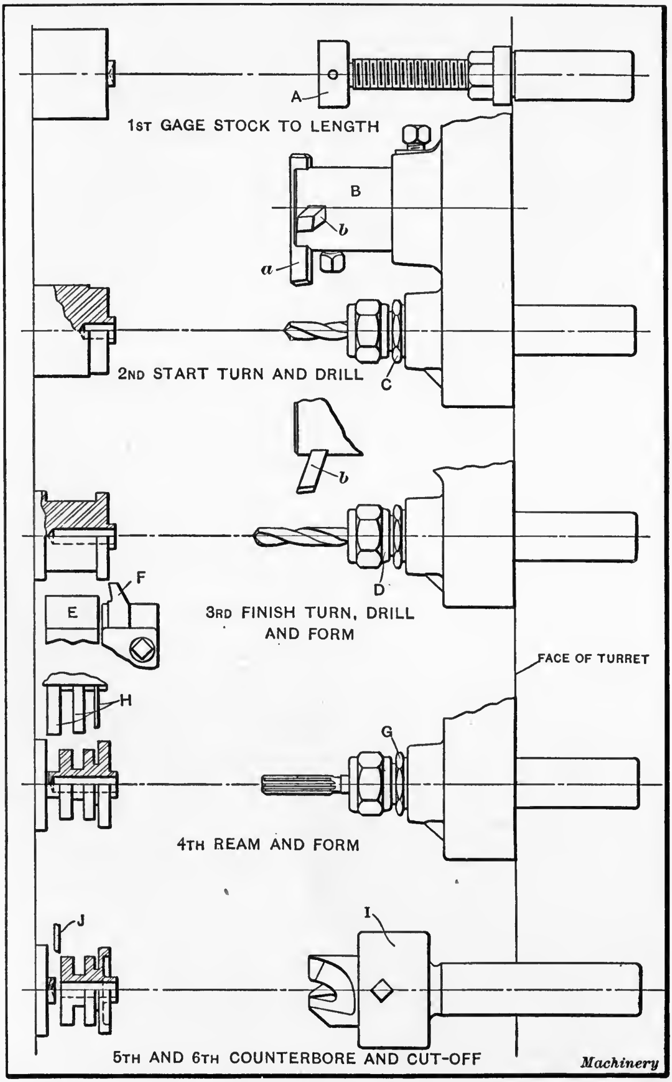

Fig. 21. Successive Operations for Producing the Twin Gear Blank Shown at C in Fig. 18

are brought into action. The grooving blade nearest the chuck is made considerably wider than the requirements of the work demand, and is used for roughing the front end of the next piece. Time for operations, 3 minutes 40 seconds.

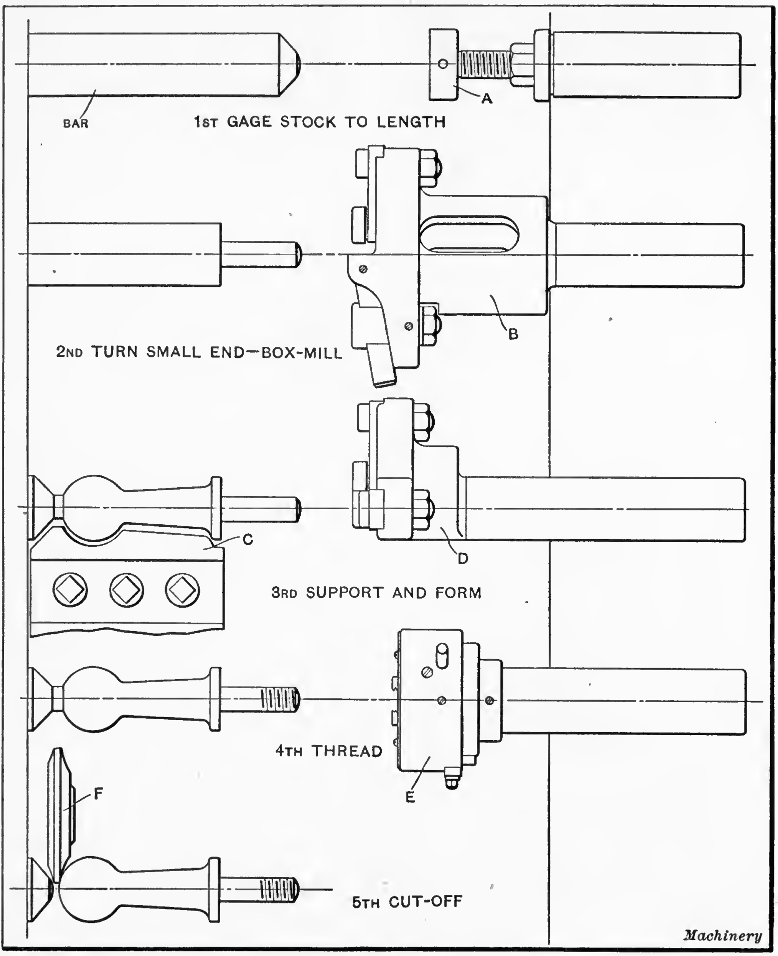

Fig. 22. Operations for Producing the Stanchion Bolt shown at D in Fig. 18

5. Index the turret, and counterbore with a tool held in holder *I* in the fifth hole in the turret. Time for operation, 1 minute.

6. Cut off with blade *J*, using an independent cut-off attachment shown in Fig. 24, and index the turret twice. Time for operation, 35 seconds. Total time, 7 minutes 50 seconds.

This is an example where there was considerable forming to be done from the cross-slide, which could not be handled efficiently with only one set of tools, that is, using only one end of the cross-slide for forming tools; consequently, both ends of the cross-slide, as shown in Fig. 24, are utilized and the work is then cut off by the independent cut-off attachment shown. For the operation of this attachment a special cam disk *A* is held on the rear shaft carrying a cam *B*. This is adjustably mounted in the T-slot groove cut in the side of the disk and can be set in any desired position. This cam comes in contact with a roll carried in the rear end of the fulcrumed arm of the attachment, raising it up and consequently depressing the front end and advancing the cutting-off tool toward the center of the work.

The stanchion bolt *D*, Fig. 18, brings up a point in the operation of the Cleveland automatic that is worthy of special attention; that is, the handling of long forming operations, especially on steel parts. This can be done much more efficiently by means of a long flat forming tool than by a circular forming tool. There are two reasons for this: 1. The flat forming tool gives much better side clearance than the circular tool. 2. The flat forming tool can be held much more rigidly and heavier cuts can be taken with it. It is also much cheaper to make. The only other point of interest about this job is the use of a self-opening die-holder. The use of this type of die reduces the time necessary for threading, as the die does not need to be backed off, but is opened as soon as the thread is completed, and the turret can be drawn back on the fast speed.

Referring to Fig. 22, it will be seen that the operations are done in the following order, a $2\frac{3}{4}$-inch Model *A* machine equipped with a No. 1 spindle drive being used:

1. Gage the stock to length with a gage stop *A* held in the first hole in the turret.

2. Index the turret and turn down the stem with a box-tool *B* held in the second hole in the turret. Time for this operation, 1 minute 30 seconds.

3. Index the turret and form an irregular shape, using a flat forming tool *C* held on the front of the cross-slide; support

the work at the same time with a roller steadyrest *D* held in the third hole in the turret, and engaging the stem of the work. Time for this operation is 3 minutes 20 seconds.

4. Index the turret and thread, using a self-opening die-head *E* in the fifth hole in the turret. Time for operation is 35 seconds.

5. Cut off, using a circular cut-off tool *F* held on the rear of the cross-slide. Time, 45 seconds.

The total time, including all the idle movements, is 6 minutes 15 seconds. The arrangement of the tools held on the cross-slide is clearly indicated in Fig. 25. The flat forming tool *C* is mounted on a wedge *A* for vertical adjustment. The forming tool is held down by the cap-screws and the wedge is adjusted by a set-screw *D*. Another set-screw *E* backs up the forming tool, supporting it much more rigidly. The cut-off tool is held on the rear forming slide and is turned upside down so that the spindle need not be reversed, the cutting off being done with the stock running in the forward direction.

Operations on Acme Multiple-spindle Machine. — The successive order of the operations in producing a long set-screw in an Acme multiple-spindle automatic is shown in Fig. 26. This set-screw is made from a square wrought-iron bar. The threaded portion is $5\frac{3}{4}$ inches long, the length over-all, $6\frac{11}{16}$ inches. The longest single operation consists in turning down the body diameter to the required size. The spindle speed at which to rotate the work should first be determined. Taking the diameter of the stock across the flats as the basis of our calculations, and deciding on a surface speed of 100 feet per minute, it will be found that the desired spindle speed should be 611 revolutions per minute. The nearest available spindle speed, in this case, is 635 revolutions per minute, which gives a surface speed of about 104 surface feet per minute.

The next step is to determine the number of revolutions necessary for the box-tool to travel up half the length of the screw — $2\frac{7}{8}$ inches. With a feed of 0.0045 inch per revolution of the work, the number of revolutions required to make this cut is about 640. As the spindle makes 635 revolutions

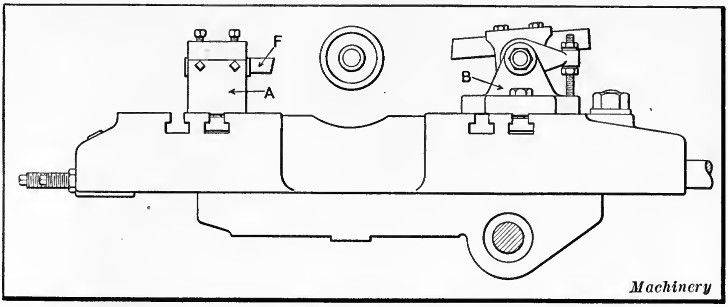

Fig. 23. Diagram showing Arrangement of Cross-slide Tools for Forming and Cutting off Piece shown at B in Fig. 18

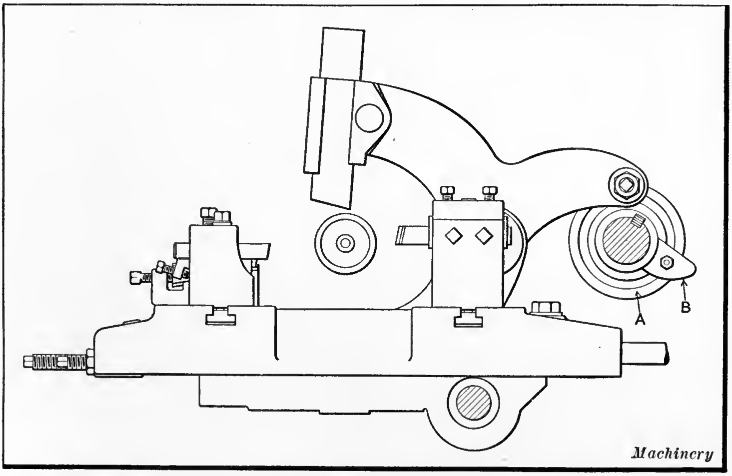

Fig. 24. Arrangement of Cross-slide Tools for the Forming and Cutting-off Operations on the Part shown at C in Fig. 18

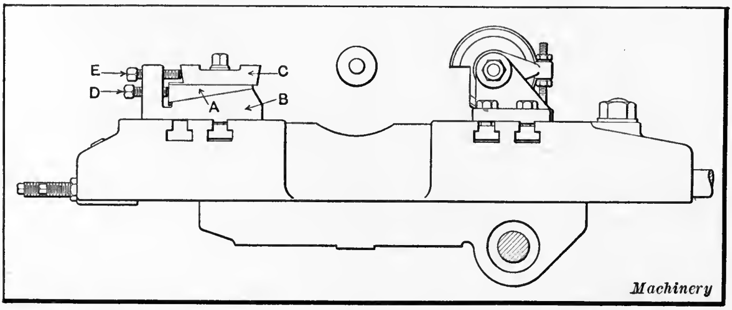

Fig. 25. Arrangement of Cross-slide Forming and Cutting-off Tools used in Connection with Operations shown in Fig. 22

per minute, the time, in seconds, to turn half the body is $\frac{60}{635} \times \frac{640}{1} = 60.47$ seconds. Adding to this the time for the idle movements of the machine gives $60.47 + 2.4 = 62.87$, or, approximately, 63 seconds. This gives a product of 57 pieces per hour, but, upon referring to the table of change-gears, it will be found that gears to give this product are not obtainable. Therefore, it is necessary to either increase the product to 59 and increase the feed of the tools accordingly, or else decrease the product to 51 pieces per hour with a corresponding decrease in feed.

The tool equipment used in making this set-screw is illustrated in Fig. 27. The operations start in the first position, where the first box-tool *A* comes into position, turns up half the length of the body — $2\frac{7}{8}$ inches — and points the end of the screw. At the same time that the box-tool is in operation on the work, the form tool comes in from the side and turns down the neck — also rough-forming the top of the head. As the cylinder is indexed into the second position, the second box-tool *B* comes into operation and finish-turns the body. The cylinder is again indexed to the third position, where a self-opening die *C* cuts the thread. After threading, the cylinder is again indexed and the piece cut off with a straight-blade cut-off tool *D*. These various operations have been described separately, but in actual performance all tools are at work on different bars at the same time.

Making Knurled Thumb-nuts. — The knurled thumb-nut shown at *A* in Fig. 29 represents an example in which the forming is the longest single operation, and is the time to make one piece. This knurled nut is made from a 2-inch bar of round brass rod in a No. 56 Acme multiple-spindle automatic screw machine. The first step in determining the time to make this piece is to obtain the correct speed at which to rotate the work. Rod brass can be worked at from 150 to 200 surface feet per minute, and, by calculation, it will be found that a spindle speed of 290 revolutions per minute will give 150 feet surface speed. The next step is to determine the proper feed at which to operate the form tool. Now the conditions under which this thumb-nut is made are ideal, as far as a heavy feed is concerned, so that the form tool can easily be operated at 0.005 inch per revolution. By dividing the travel of the form tool or 0.635 inch (allowing 0.010 inch to approach the work) by 0.005, it will be found that it will require 127 revolutions of the spindle to complete the forming operation.

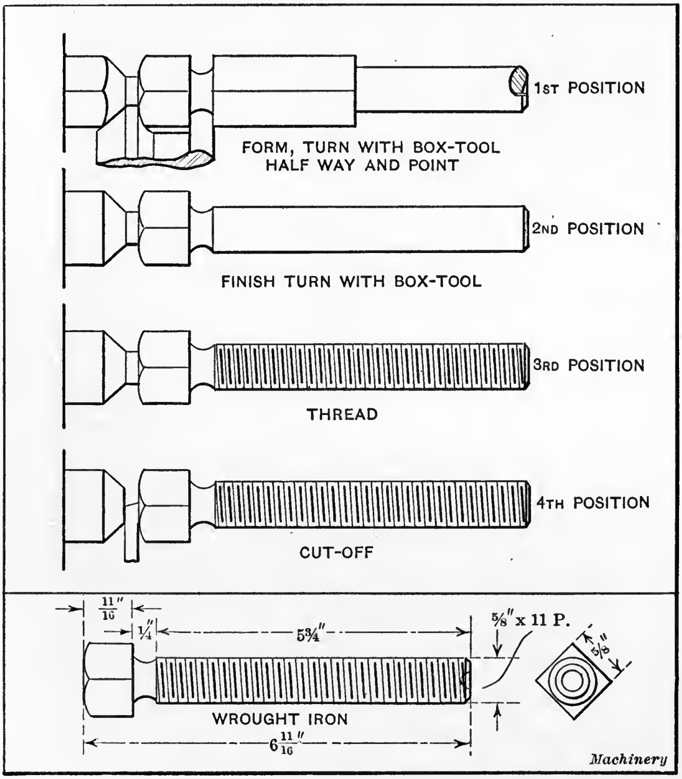

Machinery

Fig. 26. Successive Operations for Making a Long Square-headed Set-screw

As this is a case where the longest single operation is performed from the form tool-slide, it will be necessary to calculate the time required in seconds to complete the idle movements of the machine. This is found to be 4.6 seconds. (For information regarding the method of calculating the time for idle movements, see Chapter V.) Then the time in seconds to complete the forming operation equals 26.27 seconds. Adding the time for the idle movements will give $26.27 + 4.6 = 30.87$ seconds. Assume that it takes 30 seconds to make one piece; then the rate of production will be 120 per hour. The nearest production to this for which change-gears are obtainable is 122 pieces; and, by using the change-gears to obtain this production, the feed of the tools is increased slightly, which, in this case, could be done with satisfactory results.

In making this thumb-nut, the rough-forming is done in the first position and the hole drilled to the proper depth with drill *A* (see Fig. 28). In the second position, the head of the nut is knurled with knurl *B*, and the hole counterbored to a square bottom, both operations being done by tools held in the end-working tool-slide. The hole is tapped with tap *C* and the head beveled and grooved in the third position, the grooving being done with a shaving tool *D*. In the fourth position, the completed nut is cut off from the bar with cut-off tool *E*.

Making a Part Requiring Cross-drilling. — The brass knob shown at *B* in Fig. 29 is a difficult piece on which to determine the longest operation at a glance. It is evident, however, that the drilling of the large hole in the end will not require much time, so that the longest operation lies between the forming and cross-drilling cuts. The depth of form cut is 0.195 inch and, with a feed of 0.002 inch per revolution, it will require 98 revolutions of the spindle to complete this operation.

The cross-drilling attachment is held on the cut-off tool-slide, as shown in Fig. 30, and its travel is governed by the feed given to the cut-off tool. As the cross-hole is deeper than half the diameter of the stock to be severed by the cut-off tool, it is necessary to use an accelerating cross-drilling attachment. This will increase the rate of travel of the attachment in relation to the cut-off tool-slide in a ratio of $1\frac{3}{4}$ to 1. The travel of the cross-drill is equal to the depth of the hole — $\frac{7}{32}$ inch — plus the length of point on the drill and the height of

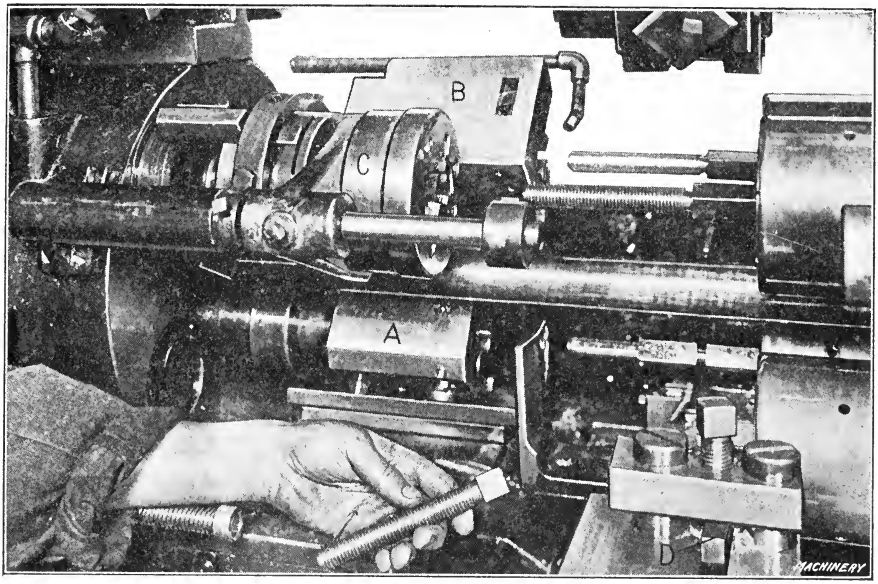

Fig. 27. Tool Equipment for Producing the Set-screw shown in Fig. 26 on Acme Multiple-spindle Automatic Screw Machine

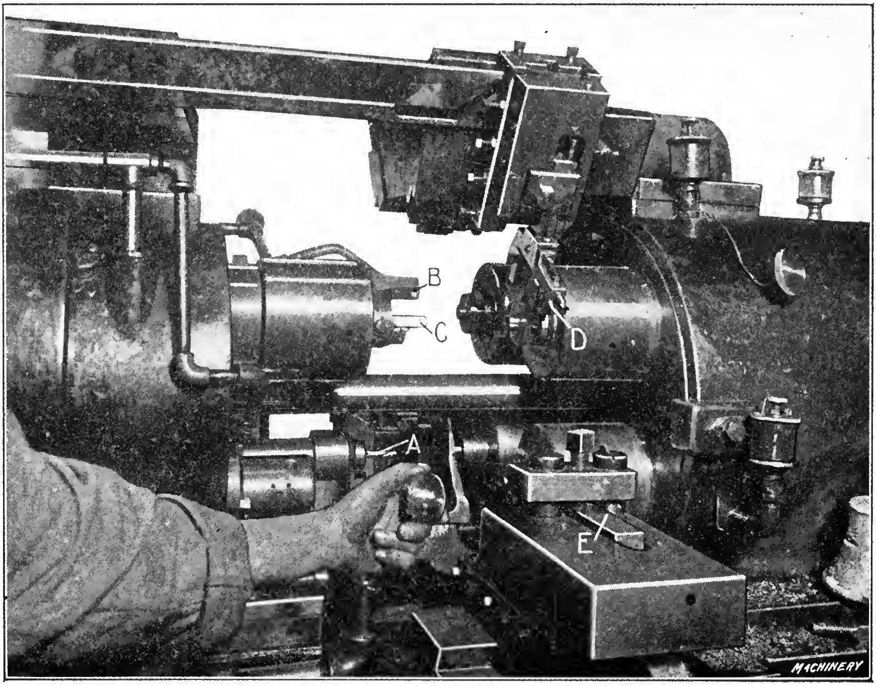

Fig. 28. Tool Equipment for Producing a Brass Thumb-nut

the arc removed from the ball by drilling a hole in it. This is equal to 0.750 inch.

With a feed for the cut-off tool of 0.003 inch per revolution, the feed of the drill in relation to the rotation of the spindle is 0.003 × 1.75 = 0.0052 inch. Then the number of revolutions of the spindle equivalent to the time required to drill the cross-hole is 143. If this work is done on an Acme No. 54 machine and the speed is 520 revolutions per minute, it will require 16.5 seconds to drill the cross-hole. Adding the time for the idle movements — 1.88 — gives a product of one piece in 18.38 seconds, or 195 pieces per hour. Upon referring to the table, it will be found that the nearest production to this for which gears are provided is 190 pieces.

Operation Requiring Use of Milling Attachment. — The cold-rolled steel bushing shown in Fig. 31 has "flats" milled on the flange by means of an attachment similar to the one shown in Fig. 13, Chapter VI, which is mounted on the cross-slide. The end-milling cutters are brought in at the same time as the cut-off tool and work in the "third" position, the cut-off tool severing the completed piece from the bar in the "fourth" position. (Instead of using two end-milling cutters from the side, this operation might be done as well with a pair of saws working from the end.) It is evident from a close study of this piece, the operations for which are shown in Fig. 32, that the longest single cut lies between the milling and forming operations. Taking the forming cut first, it will be found that the distance the forming tool must travel is $\frac{3}{16}$ inch. No allowance need be made for the tool to approach the work, as the diameter is finished by a shaving tool. The length of the forming tool is about $1\frac{1}{4}$ inch, and the smallest diameter, 1 inch, so that the feed should not exceed 0.002 inch. This rate of feed will require 93 revolutions. As the slab milling attachment is carried on the top face of the cut-off tool-slide, it can easily be seen that the feed given to the milling cutters will be governed by the feed used for cutting off. As the distance that the milling cutters must travel is greatly in excess of the travel of the cut-off tool, an accelerating device is used

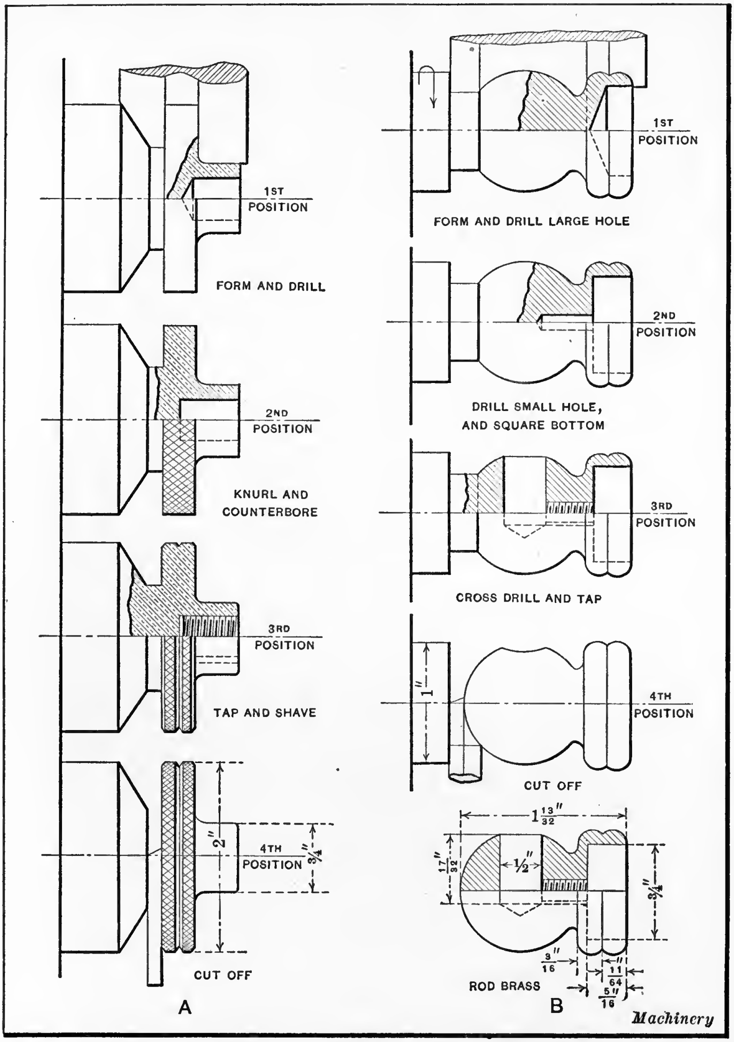

Fig. 29. (A) Successive Operations on Brass Thumb-nut. (B) Operations on Brass Knob

on the milling attachment. This increases the travel of the milling slide over the travel of the cut-off slide in a ratio of $1\frac{3}{4}$ to 1.

With a feed for the cut-off tool of 0.0025 inch per revolution, the feed or rate of advance of the milling cutters in relation to the revolutions of the spindle will be 0.0025 × 1.75 = 0.0043 inch. Then dividing this amount into the travel of the slide ($\frac{13}{16}$ plus the radius of the milling cutters, which are $\frac{1}{2}$ inch in diameter, plus 0.020 inch for clearance) gives 1.082 inch travel. This is equivalent to 247 revolutions of the spindle.

This piece can be most economically produced on a No. 54 machine, and, with a surface speed of about 95 feet per minute, a spindle speed of 260 revolutions per minute is obtained. The time required to complete the milling operation was found to be equivalent to 247 revolutions of the spindle, or 57 seconds. Adding the time for the idle movements (1.88 second) gives approximately 59 seconds to complete one piece, which is equivalent to a product of 61 pieces per hour. The nearest gears to the product required are those for 58.5 pieces; thus the rate of production would be decreased to this amount.

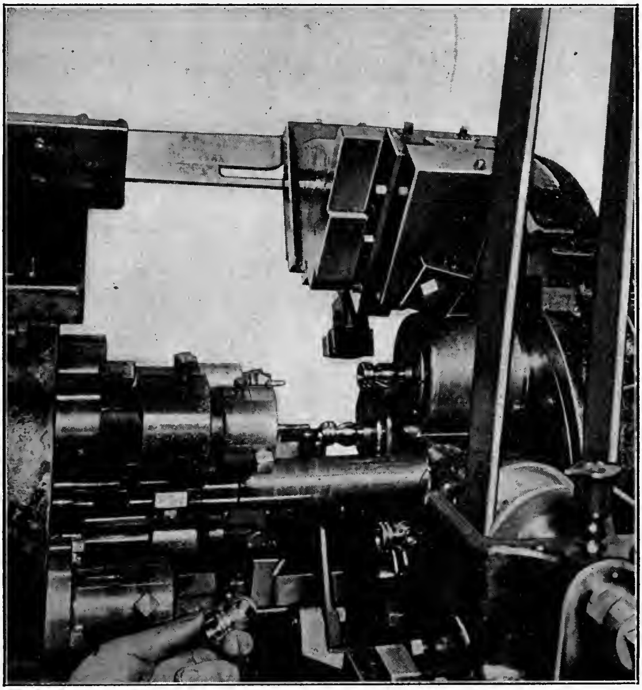

Fig. 30. Example of Cross-drilling on the "Acme" Multiple-spindle Automatic Screw Machine

Division of Cuts between Two Tools. — The threaded bushing shown at *A*, Fig. 33, is made from cold-rolled steel bar, $2\frac{3}{16}$ inches in diameter. The forming cut is rather heavy, so that the production on this piece can be considerably increased by dividing the forming cut between two forming tools. The first forming tool is used for breaking down only while the second forming tool is used to finish the piece to the desired shape. The greatest reduction in diameter on this piece is $\frac{15}{16}$ inch, making a rough-forming travel of 0.440 inch necessary. Now the finish-forming tool has to travel practically the same distance as the rough-forming tool, but, while it does not remove as much material, it is operated by the same slide as the roughing tool; hence, both roughing and finishing cuts consume the same amount of time and are the longest operations.

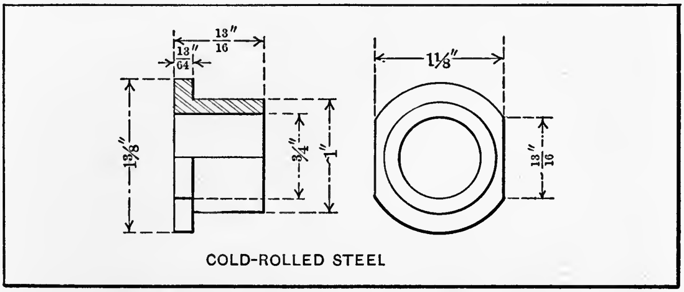

Fig. 31. Bushing that is made as indicated in Fig 32

Turning now to the drilling operation, it will be found that a hole $\frac{15}{16}$ inch in diameter and $2\frac{3}{4}$ inches deep has to be drilled. This can be divided between two drills, as shown at the first and second spindle positions, so that the travel of the main tool-slide for drilling will be $1\frac{3}{8} + \frac{1}{32}$ inch, or a total of 1.406 inch. The drills can be operated successfully in this material at a feed of 0.010 inch per revolution, so that 140 revolutions will be required to complete the drilling operation. Figuring on a feed of 0.0015 inch for the rough-forming operation, and a rise of 0.445 inch (0.005 inch being allowed to approach the work), it requires 296 revolutions of the spindle.

The tool equipment used for making the piece shown in Fig. 33 is shown in Fig. 34. The first forming tool *A* is held in the regular tool-holder, working in the first position, while the second or finish-forming tool *B* is held in a special holder, attached to the top face of the forming slide. This holder is provided with an overhanging arm in which a set-screw *C* is located, to enable the forming tool to be held rigidly in place. In making a double tool-holder of the type illustrated, it is essential that it be rigidly clamped to the tool-slide and have as much bearing surface as is consistent with the space available. As a general rule, it is advisable, when a holder is of the built-up type, to have the stock rotating toward the form tool instead of away from it. This enables a much heavier cut to be taken without chatter, as the thrust is directed against the tool-slide instead of from it, the latter action tending to lift the tool. In this case, however, the holder is supported by the top bracket, thus overcoming the tendency of the tool to rise. This job also presents another interesting feature in the double or telescopic die-holder *D*. This die-holder, which is described in Chapter IV (see Fig. 38), can be used for cutting

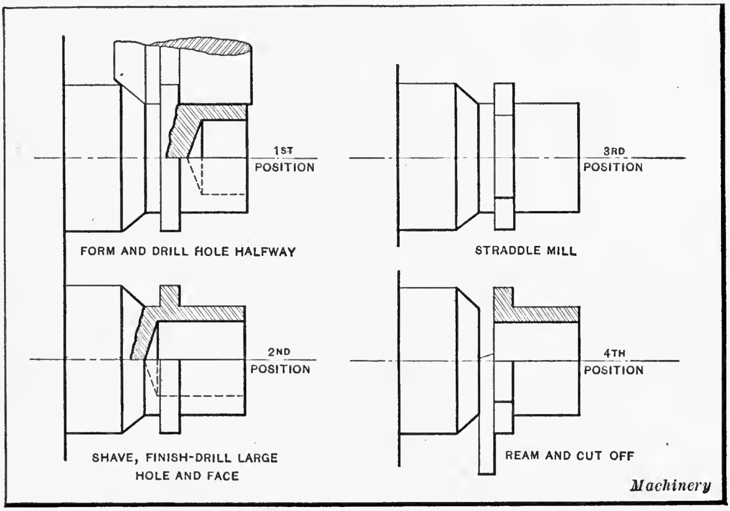

Fig. 32. Successive Operations on Steel Bushing shown in Fig. 31

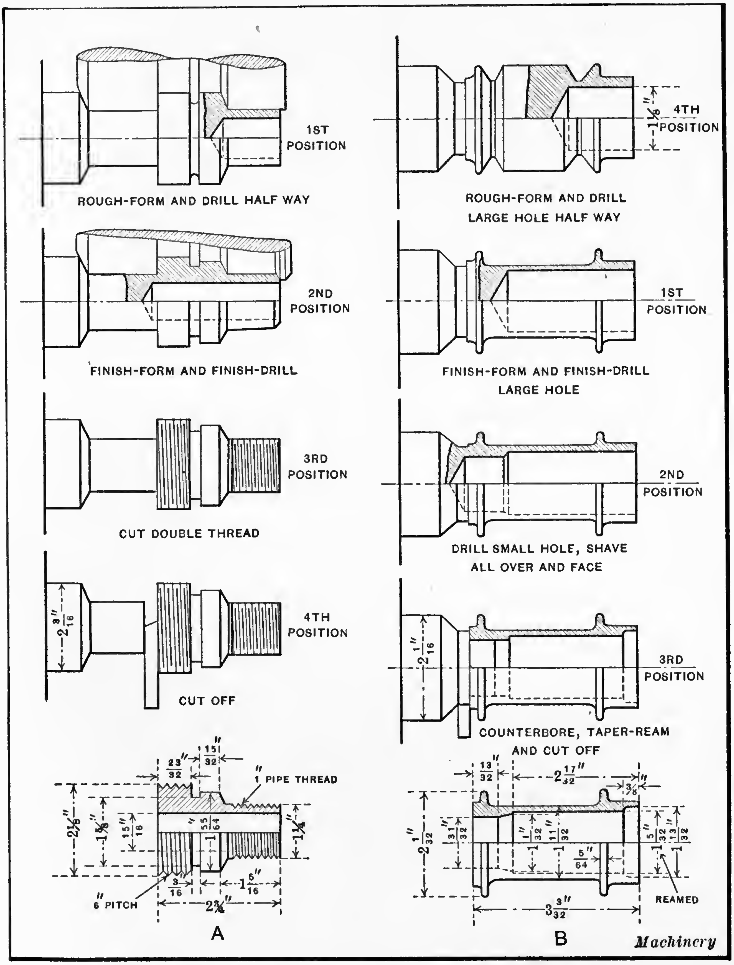

Fig. 33. Examples of Work done on Multiple-spindle Machine

threads of two different diameters and unequal pitches, owing to its construction. The outer member of the die-holder is spring controlled in its action, so that it can lead out in advance of the other part of the holder, thus enabling threads of different pitches to be cut.

Another example of work which can be produced to better advantage, by dividing the forming cuts between two tools, is shown at *B*, Fig. 33. Both forming tools are required to take long, heavy cuts, so that rigidity is absolutely necessary. In order to keep the feed up to a point where a good production is possible, the arrangement shown in Fig. 35 was adopted. This consists in placing the first forming tool in the fourth position instead of in the first, as usual, and cutting off the completed piece in the third position. It is evident that the cut-off tool does not need to be held nearly so rigidly as a form tool, and can be held on an extension bracket. This arrangement allows the rough-forming to be done in the fourth position (where the stock is fed out), and the finish-forming in the first position. If the stock were fed out in the first position, the rough-forming would have to start at this point, which would not be advisable, as the wide formed surface could not be machined with an extension tool. The arrangement shown in Fig. 35 is commendable, in that it obviates all flimsy construction, and enables the work to be produced much more rapidly.

The operations are as follows: In the fourth position the diameter is rough-formed, and the large hole drilled part way with drill *A*. In the first position, the forming cut is finished, and the large hole is drilled to the required depth with drill *B*. In the second position, the small hole is drilled with drill *F* and the diameter finished all over by a shaving tool *D*; the end is also faced with a cutter held in the holder *E* which is attached to the holder *G* carrying the drill *F*. In the third position, the hole is counterbored and taper-reamed, and the work is cut off.

Cold-rolled steel, as a rule, can be worked at from 90 to 110 surface feet per minute. It is found by calculation that a spindle speed of 100 revolutions will be about the desired speed at which to rotate the work. The rough-forming tool will stand a very much heavier feed than the finish-forming tool, and, as both tools have to travel the same distance, it is evident that the finish-forming operation will be the one on which it will be necessary to base our calculations. The form tool is made up of two sections and the smallest diameter formed

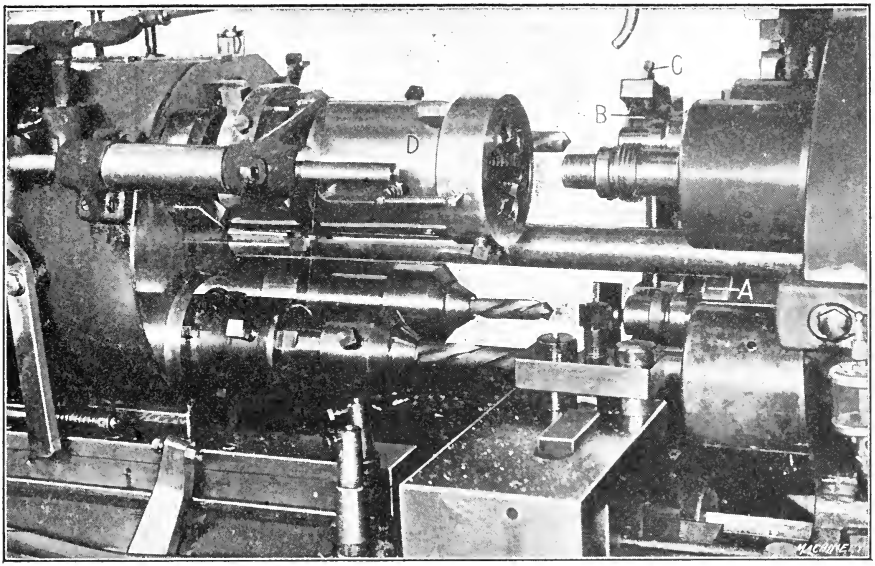

Fig. 34. Tool Equipment for Producing the Steel Part shown at A in Fig. 33 on "Acme" Machine

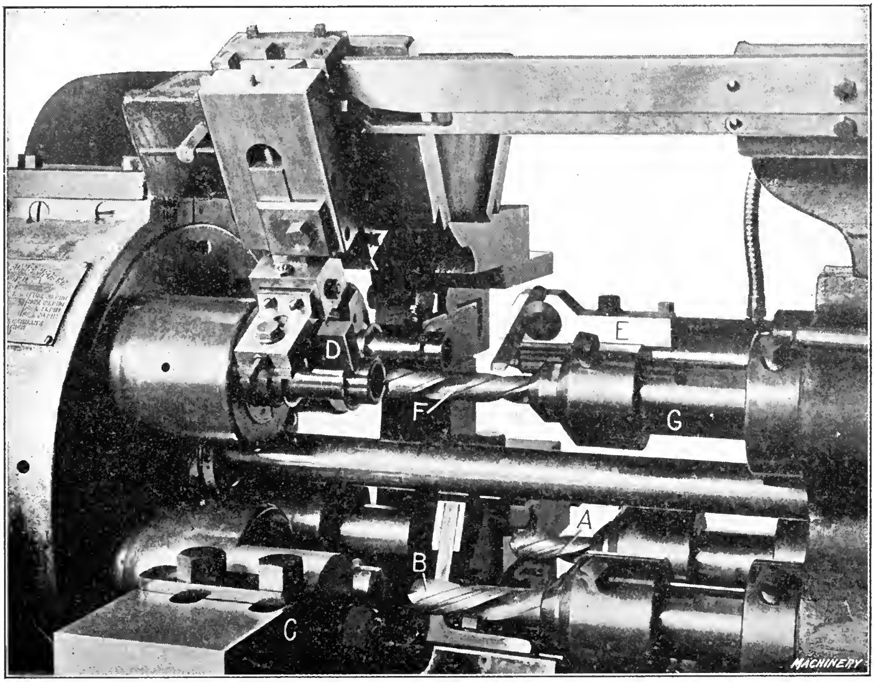

Fig. 35. Arrangement of Tools for Operations illustrated at B in Fig. 33

is $1\frac{1}{32}$ inch. Therefore, it would be inadvisable to use a feed exceeding 0.0015 inch per revolution of the work. Figuring on a travel of 0.350 inch for the finish-forming tool, at the rate of 0.0015 inch feed per revolution, 233 revolutions will be required to complete this operation. As the forming cut is the longest single operation, we find from this the time to make one piece. The spindle speed used is 100 revolutions per minute, and the revolutions required for forming are 233, which is equivalent to 2 minutes 18 seconds; adding the time required for the idle movements — 4.6 seconds — a total of 2 minutes 23 seconds, approximately, will be required to complete one piece, or 26 pieces per hour.

Assembling Parts in Screw Machine. — The assembling of parts in the automatic screw machines is a practice which is not widely followed, but represents an interesting development. The examples to be described include not only the assembling operations, but also the making of the parts to be assembled from the same bar at the same chucking. This not only decreases the cost of making the parts, but also eliminates the necessity of handling them a second time.

Machining and Assembling a Bolt and Nut. — In Fig. 36 is shown a small brass bolt and nut which a jobbing shop had been making for several years, each part being made on a separate machine. The assembling was done by hand, and consisted of screwing the nuts on the bolts. These parts are now made in a No. 0 Brown & Sharpe automatic screw machine at the same chucking, and assembled without rehandling.

The most interesting feature of the present method is the indexing of the turret twelve times during one revolution of the cams; that is, the turret makes two complete revolutions while the cams make one; the necessity for this will be explained later. The machine spindle is reversed three times. The additional revolving of the turret and reversing of the spindle are accomplished by the use of extra tripping dogs.

The method of applying the circular tools and the assembling tool is shown in Fig. 36. The form tool *A* forms the body of the bolt and cuts off the nut, and *B* is the tool which cuts off the bolt. This latter tool is mounted on the front cross-slide. This lay-out requires but one feeding of the stock for both pieces. The turret tool, which is a carrier for the nut, comes forward just before the nut is cut off, and the spring chuck *C* closes over it. (The stock at this point is running backward.) The clutch finger *D* allows the carrier *C* to revolve in the holder *E*, thus preventing the nut from turning in the spring chuck and wearing off the corners. When the nut is inserted in the chuck *C*, and has been cut off, the spindle is reversed to run forward, the clutch finger preventing the carrier from turning. This clutch also acts while the nut is being screwed on the bolt. The clutch is more clearly shown in the sectional view to the right. The order of operations is as follows:

Order of Operations	Revolutions	Hundredths
Feed stock to stop	18	3
Revolve turret	18	3
Drill — 0.178-inch rise at 0.0034-inch feed	53	9
Revolve turret	18	3
Tap in	12	2
Tap out	12	2
Cut off — 0.145-inch rise at 0.0017-inch feed	83	14
Revolve turret twice and bring carrier forward	(36)	(6)
Form with tool on rear slide — 0.130-inch rise at 0.00085-inch feed	159	27
Back away form tool to clear threading die	12	2
Revolve turret five times	(90)	(15)
Thread on	17	3
Thread off	17	3
Revolve turret	17	3
Thread on nut	12	2
Reverse spindle and withdraw turret	12	2
Cut off bolt — 0.237-inch rise at 0.0019-inch feed	124	21
Revolve turret twice	(36)	(6)
Clearance	6	1
Total revolutions	590	100

With a spindle speed of 1474 revolutions per minute, this lay-out gives a gross production of 1500 pieces in ten hours, or 1350 pieces net. The time required to make and assemble both pieces is 24 seconds. After the stock is fed out to a length sufficient to make both pieces, the end is drilled and tapped for the nut, which is then inserted in the carrier and cut off. The problem which now arises is to index the turret a sufficient number of times to bring the carrier into position to screw the nut on the finished bolt, as soon as the latter has been threaded. This is successfully accomplished by indexing the turret twice while cutting off the nut, and five times while forming the bolt.

The most interesting part of the job is the laying out of the cams. The usual set of three cams is shown in Fig. 37, the outline of the lead cam being shown as a solid line. It will be noticed that the lobe for centering is omitted from the lead cam. This is done because of the shallow depth of the hole to be drilled, and also because the work is not required to be very accurate.

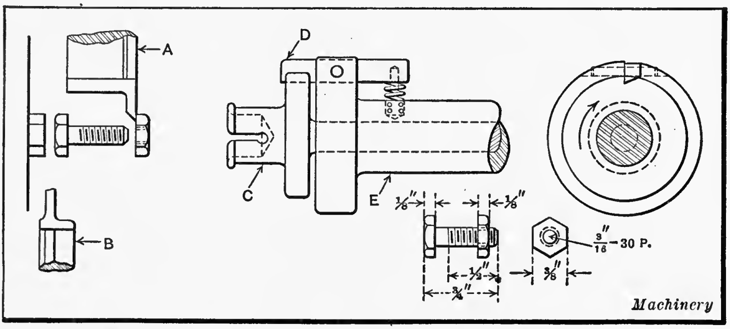

Machinery

Fig. 36. Method of Applying the Circular Tools; the Carrier or Assembling Tool, and Nut and Bolt to be made and Assembled

The lobe which operates the carrier when gripping the nut is shown from 28 to 36 on the lead cam. Careful calculations are necessary to determine the exact position of this lobe, so that the carrier will grip the nut before it is cut off. The method used to determine the position of this lobe is as follows: During the time from 22 to 28, which is equal to 36 revolutions of the spindle, the cut-off tool has advanced at the rate of 0.0019 inch per revolution, or $36 \times 0.0019 = 0.0684$ inch. The diameter of the stock across the corners is 0.432 inch, and the diameter of the drilled hole is 0.125 inch. Then the thickness of the wall on each side of the hole when the carrier advances on the work $= \dfrac{0.432 - (0.0684 \times 2) - 0.125}{2} = 0.085$ inch, which is great enough to prevent the nut from breaking off when the carrier closes over it.

The hook-shaped lobe from 74 to 76 threads the nut on the bolt, and the sudden drop pulls the carrier off the nut. The spindle is then reversed, so that it will be rotating in the correct direction to cut off the finished piece. The portion of the cam surfaces from 99 to 0 allows the cut-off tool to drop back and clear the stock before it is fed out for the next piece.

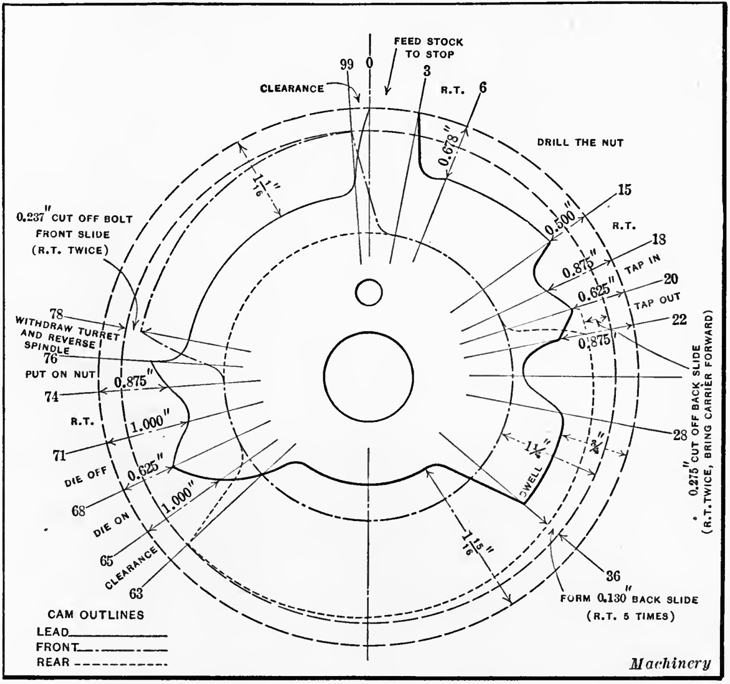

Machinery

Fig. 37. Cams used for Making and Assembling Nuts and Bolts

Assembling by Means of Spinning Tool. — An assembling operation which is a little more difficult than that previously described is shown at *A*, Fig. 38. This operation was accomplished in a No. 2 Brown & Sharpe automatic screw machine and consists in making and assembling the socket joint *a* and grooved roller *b*. When in use, this grooved roller rides between two tracks as shown at *A*, and the ball part rotates freely in the socket joint *a*. The work was not required to be held to very close limits, and the milling and drilling, as shown at *B*, were done in separate operations.

In setting-up the machine for making the pieces *a* and *b*, the stock is first fed out by hand to the length shown at *A*, Fig. 39, where the bar is faced off, and the grooved roller formed; the stock is then fed out to the length shown at *B* where the grooved roller is cut off. When in this position, the slotting arm descends, carrying the pick-up shown at *C* in Fig. 40, which grips the grooved pulley, and after it is cut off lifts it out of the way ready to be brought back, when it is to be assembled in the socket joint. While the stock is in the position shown at *B* (Fig. 39), the hole is drilled and reamed. The reamer, shown at *A* in Fig. 40, is so shaped that it makes a correct seat for the ball on the grooved roller.

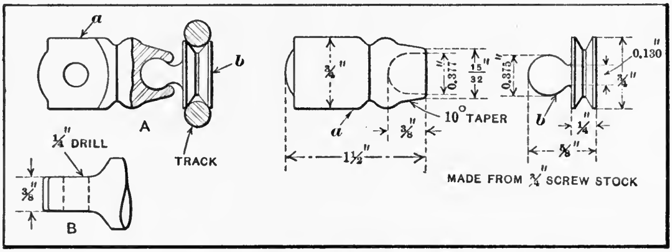

Fig. 38. Pieces to be Made and Assembled

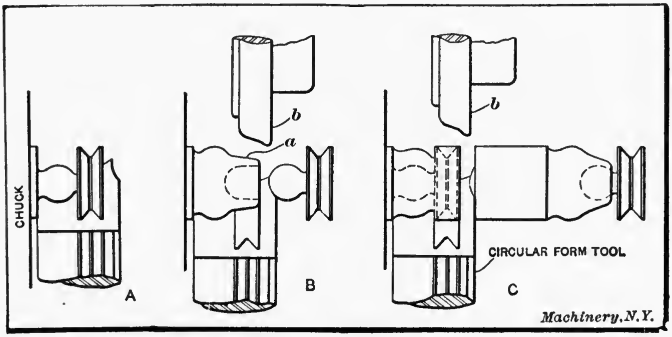

Fig. 39. Positions of the Stock for the Various Operations

The tapered part *a* (Fig. 39) of the socket joint is formed with a box-tool after the hole has been drilled and reamed.

When this operation is finished, the slotting arm is brought down, carrying the grooved roller, and the spring stop *B*, Fig. 40, which is held in the turret, and forces the roller into the socket joint. The spring stop remains stationary in this position, as does the pick-up, while the spinning tool *b*, shown in Fig. 39, which is held rigidly to the rear cross-slide, is advanced and turns the nose of the joint over the ball, thus assembling the two parts. When this is accomplished, the spring stop is dropped back and the stock fed out against it. The stock is now in the position as shown at *C*, where the completed joint is cut off and the next roller formed to shape, as shown by the dotted outline, which would leave the stock in the same position as at *A*. The operations for making and assembling these two pieces are as follows:

Order of Operations	Revolutions	Hundredths
Feed stock to stop	23	3
Cut off — 0.375-inch rise at 0.0021-inch feed	177	23
Cut off and form — 0.040-inch rise at 0.0012-inch feed	32	4
Clearance to bring down slotting arm while cutting off piece, take hold of piece and return slotting arm	7	1
Center — 0.200-inch rise at 0.0051-inch feed	39	5
Revolve turret	23	3
Turn with box-tool — 0.375-inch rise at 0.006-inch feed	62	8
Revolve turret	23	3
Drill — 0.387-inch rise at 0.0046-inch feed	85	11
Revolve turret	23	3
Ream — 0.387-inch rise at 0.0082-inch feed	47	6
Revolve turret and bring down slotting arm with piece	23	3
Push in piece with holder *B*, held in slotting arm (Fig. 40)	(23)	(3)
Spin over end with spinning tool held on rear slide — 0.125-inch rise at 0.0054-inch feed	23	3
Withdraw holder and feed stock to stop	31	4
Cut off and form — 0.270-inch rise at 0.002-inch feed	131	17
Revolve turret	23	3
Total revolutions	772	100

With a spindle speed of 421 revolutions per minute, it requires 110 seconds to make one piece, which gives a gross production of 327 pieces in ten hours. The cams for making and assembling the pieces *a* and *b*, Fig. 38, are shown in Fig. 41, where the lobes for performing the various operations are clearly outlined.

Assembling a Roller on its Bearing. — Another operation requiring assembling is shown in Fig. 42. A No. 2 Brown &

Sharpe automatic screw machine was used. This part is made up of a stud *a*, on which turns the roller *b*, held in place by the washer *c*, the latter being pressed on the stud. The part is shown disassembled at *B*. There are two unusual operations to be performed. The first is to ream a large hole behind a small one, and the second is to cut off three times, requiring the stock to be fed out three times for the completion of each assembled part.

In operation, the stock is first fed out to the length shown at *A* in Fig. 43, where the hole is centered, drilled, and the washer shown in section at *a* is reamed to 0.375 inch in diameter. The remainder of the hole, which is in that part of the stock that will form the roller, is bored with a recessing tool to 0.380 inch. Meanwhile the circular form tool *b* has turned the hub *c* to 0.377 inch in diameter, and also formed the groove in the roller. The form tool leaves sufficient stock around the bottom of the hole to hold the parts together.

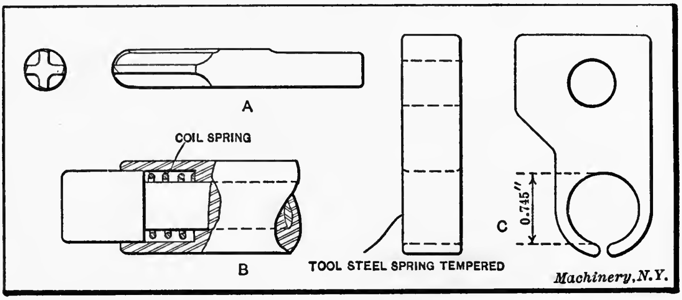

Fig. 40. Reamer, Assembling Tool, and Pick-up

Before cutting off the washer, the special tool shown at *B* comes forward and enters $\frac{1}{8}$ inch into the hole. The pilot of this tool is slotted and spring-tempered, so that it will take hold of the washer when it is cut off. When the washer is separated from the bar, the cut-off tool drops back and the stock is fed forward sufficiently to allow the roller to be cut off. The pilot tool has now entered the hole of the roller as seen at *B*, which also shows the relative position of the washer.

This pilot tool is also used as the stop, the stock being fed against the face *d*.

The pilot, holding both the roller and the washer, now moves forward until the end comes in contact with the stud at *e*, when the turret still advances sufficiently to push the roller onto the stud, and also to press the washer onto the end, thus holding the roller in place. In the meantime, the pilot has been held against the end of the stud by the coil spring *f*. The work is now fed forward to the over-all length, and cut off as shown at *C*. Provision is made for the slight burr which is left around the edge of the hole when the roller is cut off, by cutting a groove *g* in the stud, as shown at *A*. The outside diameter of the washer is turned with a box-tool, which obviates the necessity of using an extremely wide forming tool. The order of operations is as follows:

Order of Operations	Revolutions	Hundredths
Feed stock to stop	27	2
Revolve the turret	34	2½
Turn and center with box-tool — 0.145-inch rise at 0.0054-inch feed	27	2
Form — 0.350-inch rise at 0.001-inch feed	(350)	(25)
Revolve the turret	41	3
Drill — 0.561-inch rise at 0.0045-inch feed	125	9
Revolve the turret	42	3
Ream — 0.145-inch rise at 0.0052-inch feed	28	2
Revolve the turret	41	3
Recess — front cross-slide cam, 0.011-inch rise at 0.001-inch feed	14	1
Recess — lead cam, 0.260-inch rise at 0.0074-inch feed	35	2½
Revolve the turret	42	3
Cut off the washer — 0.360-inch rise at 0.002-inch feed	180	13
Take hold of washer with pilot	—	—
Clearance	14	1
Feed stock against pilot holder	27	2
Cut off roller — 0.554-inch rise at 0.002-inch feed	277	20
Clearance	28	2
Push on roller and washer — 0.375-inch rise	42	3
Revolve the turret	42	3
Feed stock to stop	28	2
Cut off finished piece — 0.554-inch rise at 0.002-inch feed	277	20
Clearance	14	1
Total	1385	100

With a spindle speed of 277 revolutions per minute, it requires 300 seconds to complete one assembled part, which gives a gross output of 120 pieces in ten hours. In this case,

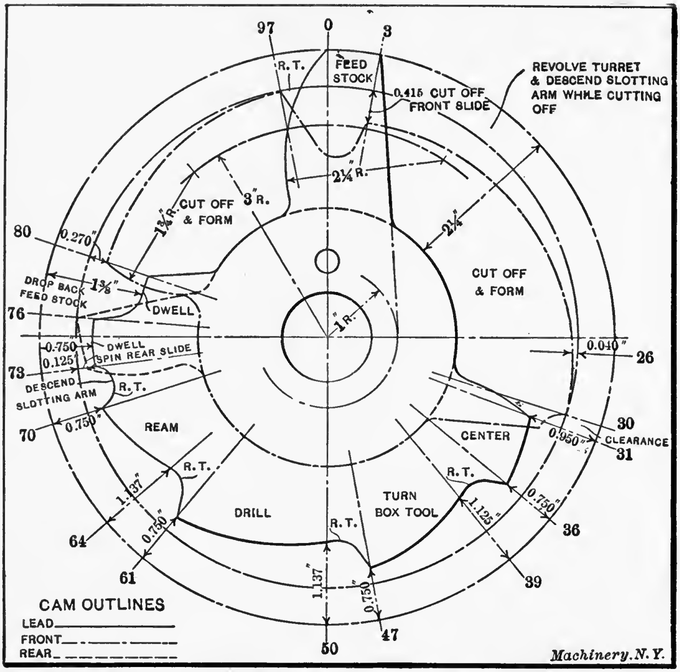

Fig. 41. Cams used for Making and Assembling a Grooved Roller and Socket Joint

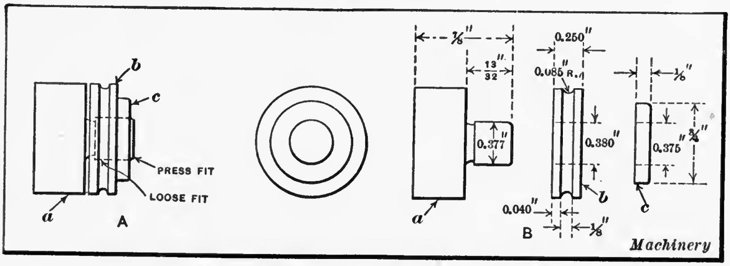

Fig. 42. The Assembled Part and its Details

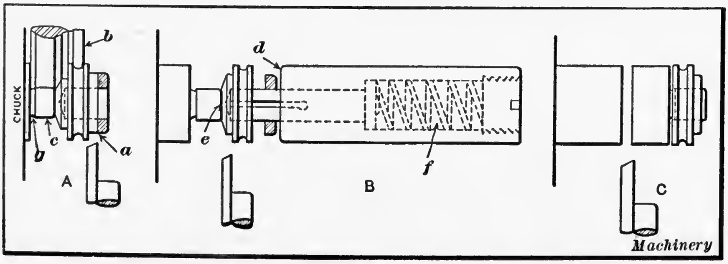

Fig. 43. Positions of Stock for the Various Operations

a combination box-tool and center tool was necessary, as the turret was filled with tools. Referring to the lay-out of the cams shown in Fig. 44, it will be seen that there are a number of short lobes on the lead cam. These lobes, when made accurately, will work just as well as the longer ones, because the cam is turning very slowly. The front-slide cam from 26½ to 27½ feeds the recessing tool in at right angles to the spindle, and from 27½ to 30 is a dwell, while the recessing tool is fed forward by the lead cam. The front slide drops back a little ahead of 30, so as to release the recessing tool, before it is withdrawn by the turret. From 33 to 46, the front cam actuates the cut-off tool, separating the washer from the bar, and, after dropping back enough at 46 to allow the roller to be fed out, it again advances and cuts off the roller. After again

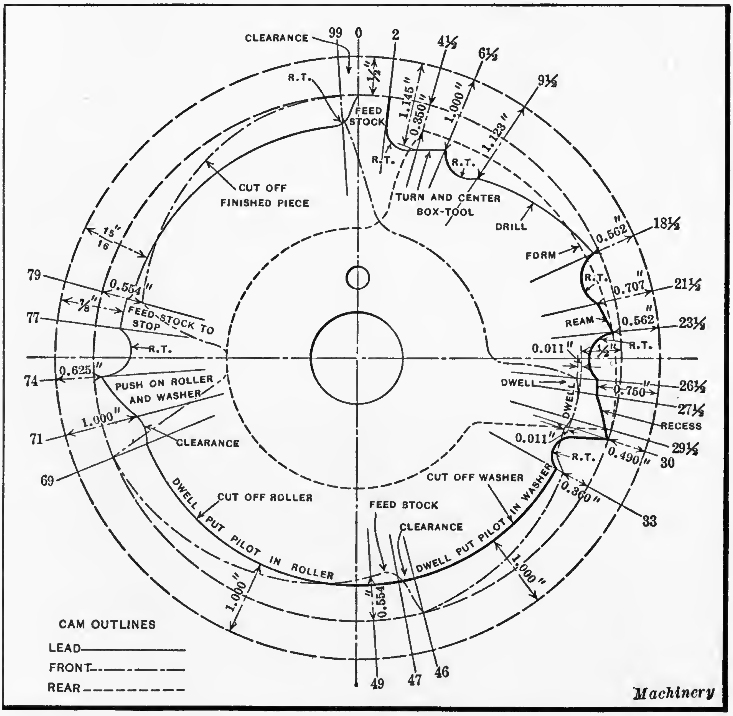

Fig. 44. Lay-out of the Cams for Machining and Assembling Operations

feeding the stock, the finished part is cut off by the lobe from 79 to 99.

The dwell on the lead cam which follows the recessing lobe keeps the spring pilot in the hole of the washer while it is being cut off. From 47 to 49, the stock is fed forward preparatory to cutting off the roller. The rise from 71 to 74, which pushes the roller and washer onto the stud, was not made when the job was first set up, as it was a case of cut-and-try, in order to obtain the proper advance. The shape of the curve shown in the illustration was finally arrived at and was successful. When the stock is fed (77 to 79 on the cam), it reaches the length shown at *C* in Fig. 43, and when it is again fed (0 to 2 on the cam), it reaches the length shown at *A*. The weight of the piece causes it to drop before the cut-off tool has reached point 99, so that no interference occurs when revolving from one stop to the other.

It might be well to give the reason why one stop could not be used for these last two feeding movements of the stock, thus allowing space in the turret for a centering tool instead of using the combination box-tool and center. The reason this could not be done is that the difference in the length between the two feeding movements is so great that the cam from 77 to 79 would have to be cut very much lower than it is from 0 to 2, and, in rising from the low to the higher point of the cam, the stop in the turret would strike the work before it was cut off; of course, cam space could be allowed to prevent this, but it would mean lost time.

Thread Rolling in the Screw Machine. — The formation of threads by rolling is effected by hardened rolls or dies having threads or ridges which roll grooves into the blank and raise enough material above the surface of the blank to form a thread. When threads are rolled in the automatic screw machine, the tool used is in the form of a disk having a threaded periphery and mounted so as to revolve freely when forced against the blank to be threaded. Thread rolling is done in automatic screw machines, when a thread is required behind a shoulder where it would be impossible to cut it with a die.

In this way, a second operation on the work is obviated. The roll used for forming the thread should be large enough in diameter to turn freely on the pin on which it is mounted. The thread on the roll should be the opposite hand to that which is to be produced on the work; that is, if the thread required on the work is to be right-hand, then the roll should be left-hand, and *vice versa*. For rolling a right-hand thread, the work should revolve in the same direction as when a thread is cut in the lathe. Whenever practicable, the roll should pass under the work. The roll-holder should have a vertical adjustment so that the roll can be set to the proper height.

Thread rolling in automatic screw machine practice is generally only applied to brass and similar materials, owing to the difficulty of securing a roll that will withstand the severe service incident to rolling threads in harder metals. Thread rolls for steel work, however, have given fairly good results, when made of chrome-nickel steel containing from 0.15 to 0.20 per cent of carbon. Thread rolls for brass and similar materials should be made from 3-per cent nickel steel containing about 0.12 per cent of carbon. The heat-treatment recommended is as follows: Carburize six hours in straight coarse bone (not bone dust), heating to a temperature of 1600 degrees F., and allow the rolls to cool in the pots. Then heat to 1600 degrees F. and quench in oil. Reheat to 1400 degrees F. and quench in water, after which draw the temper to 400 degrees F. in oil. The following information applies to the rolling of threads in brass and other soft materials, and is largely based upon experiments made by the Brown & Sharpe Mfg. Co.

Obtaining the Blank Diameter. — As a rule, the diameter of the blank for brass should be approximately equal to the pitch diameter. When rolling a U. S. standard thread, the diameter of the blank should be slightly less than the pitch diameter of the thread, because of the impracticability of using a thread roll with a flat top. If the threads on the roll are not made sharp at the top, considerably more pressure will be required to force the roll into the work, and it will not produce as smooth and perfect a thread. Therefore, all thread rolls, whether for forming a sharp V or a U. S. standard thread, are made with a sharp V, top and bottom. It is not necessary to make the bottom of the thread on the roll sharp, but there would be no advantage in having it flat, as the outside diameter of the screw is governed by the diameter of the blank. The shape of the thread produced by a thread roll, when the U. S. standard form is required, is shown in Fig. 46 (central illustration). The pitch diameter *B* is the same as the pitch diameter of the U. S. standard form, Fig. 45. The root diameter *C*, however, is less than the root diameter *A* of the U. S. standard thread. The approximate diameter of the blank can be found by the following formula, in which D = diameter of the blank; B = pitch diameter of the screw; F = depth of U. S. standard thread = $0.6495\,p$:

$$D = B - \tfrac{1}{8}F.$$

The pitch diameter $B = d - F$, in which d = nominal external diameter of the screw.

When rolling a thread having a sharp V-form, the pitch diameter *E*, Fig. 47, can be used as the approximate diameter of the blank. The pitch diameter for a V-thread is found by the formula: $E = d - H$, in which $H = 0.866\,p$. The correct diameter of the blank, in any case, must be determined by experiments, owing to variations in the hardness of different materials. It is a simple matter, however, in the automatic screw machine, to reduce or increase the diameter of the blank so as to obtain a screw of the required diameter.

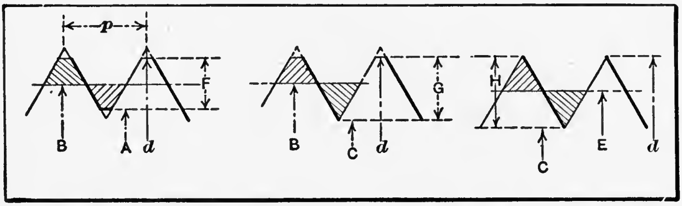

Figs. 45, 46, and 47. Dimensions involved in Calculating Blank Diameters for Thread Rolling

Size of the Thread Roll. — The best results are obtained by using a thread roll with a single thread, but, when the piece to be rolled is less than $\frac{5}{8}$ inch in diameter, it is necessary to make the roll with a multiple thread, because the diameter of the roll must then be made twice the diameter of the blank. The Brown & Sharpe Mfg. Co. has found that the pitch diameter of the roll should not be an exact multiple of the pitch diameter of the finished piece, but slightly less. The pitch diameter of the roll for a U. S. standard thread can be found by the following formula, in which K = pitch diameter of roll; N = approximate ratio between pitch diameter of roll and pitch diameter of piece to be threaded; D = outside diameter of blank; G = depth of thread:

$$K = N \times (D - \tfrac{1}{3} G).$$

For a sharp V-thread, the root, pitch, and outside diameters of the roll are found by the following formulas, in which D_1 = pitch diameter of thread roll; D_2 = root diameter of thread roll; D_3 = outside diameter of thread roll; N = approximate ratio between pitch diameter of roll and pitch diameter of piece to be threaded; E = pitch diameter of thread or diameter of blank; H = depth of thread = 0.866 p:

$$D_1 = N \times (E - \tfrac{1}{3} H); \qquad D_2 = D_1 - H; \qquad D_3 = D_1 + H.$$

The thread rolls used by the National-Acme Mfg. Co. are made from $1\frac{3}{4}$ to $2\frac{1}{4}$ inches in diameter and sometimes larger, multiple threads being used when the work is smaller than the outside diameter of the thread roll. Assuming that D_1 = outside diameter of thread roll; n = number of "starts" or threads on the roll; d = outside diameter of part to be threaded (diameter after completion of thread); G = depth of thread; then:

$$D_1 = n \times (d - 1.25\, G).$$

When making a thread roll, the outside diameter is turned to the size required, and the end should be beveled to an angle of 45 degrees (as shown to the right in Fig. 48), to prevent the thread at the end from chipping or breaking out. Thread rolls are usually lapped after hardening, in order to obtain a smooth finish on the threads. This may be done by mounting the roll on an arbor and rotating it while the threads are lapped, by using a piece of hard wood charged with some fine abrasive and oil.

Preparation of Work for Thread Rolling. — In most cases, that part of the work on which a thread is to be rolled can be turned by a formed tool. The thread to be rolled is usually at the rear of a shoulder and, in such cases, it is desirable to use a formed tool of such a shape that it will cut an annular groove next to the shoulder, as shown at *A* in the view to the left of Fig. 48. The diameter at *B* should also be reduced at the point where the work is to be cut off from the bar of stock. The angle α should be 45 degrees, and the distance *C* equal to at least half the single depth of the thread, so that the part *B* will be slightly smaller than the root diameter of the threaded part. The distance *E* should be made equal to *C* and dimension *F* equal to at least the pitch of the thread.

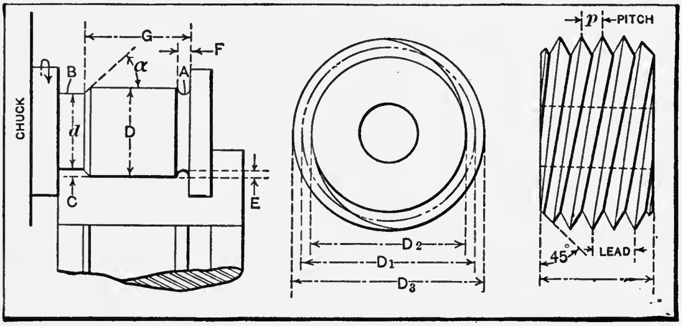

Fig. 48. Preparing a Part for Thread Rolling — Thread Roll with a Double Thread

Application of Thread Roll to Work. — Thread rolls, like knurls, are presented to the work either radially or tangentially. The method of holding and applying the roll is governed, in many cases, by the relation that the thread rolling operation bears to other machining operations. The design of the holder for the thread roll is also governed to some extent by the type of screw machine for which the holder is intended. Several types of holders adapted to different conditions and different designs of machines will be described.

Thread Roll Applied to Top Side of Work. — The holder shown in Fig. 49 is intended for a Brown & Sharpe machine. It is attached to the cross-slide and operates tangentially on the top side of the work. When no other tool is operating at the same time as the thread roll and there are no chips to interfere with the thread rolling operation, the roll can be held more rigidly than by passing it under the work instead of over it. When the roll is fed over the work, there is a tendency to raise the cross-slide, whereas, when the roll operates on the under side of the work, the pressure is downward and, consequently, the holder is more rigidly supported. The thread roll shown in Fig. 49 rotates on a pin and is inserted in a slot cut in the end of the holder. The roll should closely fit both the pin and the slot in the holder, because any lost motion would result in marring the thread. The set-screw at the rear of the holder is used for setting the roll to the proper depth. The cutting-off tool is located back of the thread roll

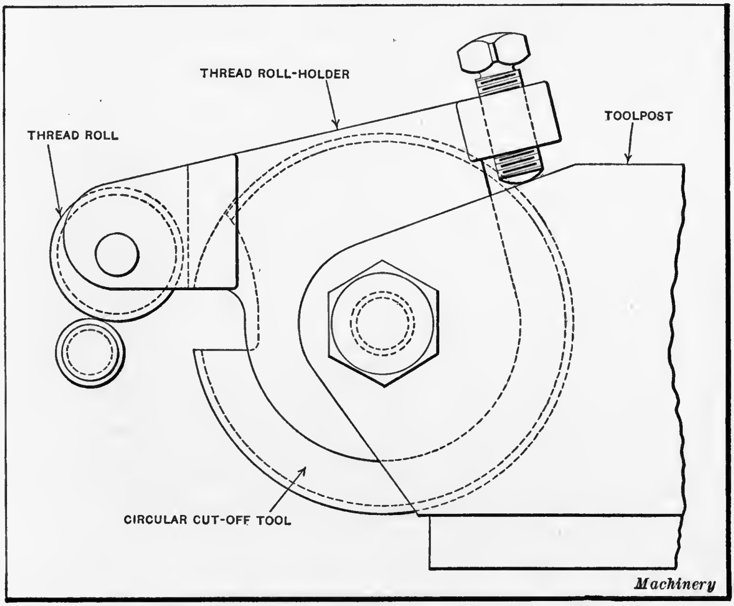

Fig. 49. Application of Thread Roll to Top Side of Work

so that the work will be severed from the bar before the roll returns. The roll should be moved in to within about 0.010 inch from the work on the quick rise of the cam, and then be fed in until the roll is directly over the center of the work, at a feed which usually varies from about 0.002 to 0.004 inch per revolution of the work. The roll should then be moved past the work rapidly, thus bringing the cutting-off tool into position.

Thread Roll Applied to Under Side of Work. — The thread-roll holder shown in Fig. 50 is attached to the cross-slide, and the roll is so located that it passes beneath the work when forming a thread. The set-screw *A* bears against the cross-slide and is used for adjusting the roll to the proper depth as well as for supporting the holder. This type of holder may be used when no other tool is operating on the work at the same time and there are no chips to interfere with the thread rolling operation. The cutting-off tool located back of the roll severs the work after the thread is finished, so that the roll does not come into contact with the thread on its return movement.

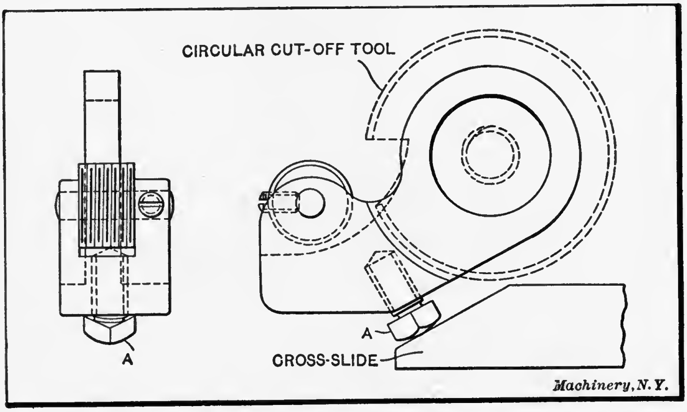

Fig. 50. Holder used when the Thread Roll is passed under the Work

Swing Tool for Thread Rolling. — When the thread roll cannot be carried on the cross-slide of a Brown & Sharpe machine, a swing type of tool, similar to the design shown in

Fig. 51, is employed. For instance, if it were necessary to feed in the cut-off or form tool more than once on the same piece, a swing holder should be used in preference to the cross-slide type. The swing holder operates upon the same principle as an ordinary swing tool for turning. There is a swinging arm which carries the roll and which is moved inward, for bringing the roll into contact with the work, by means of a raising plate attached to the cross-slide which engages the set-screw located at the end of the swinging arm. The shank of the holder is inserted in a hole in the turret. If the length of the work exceeds about 2½ times its diameter, the swing-roll holder should be equipped with a support. A hole is drilled through the shank of the holder and a set-screw is provided for holding the supporting member. The method of applying this support is governed by the shape of the work.

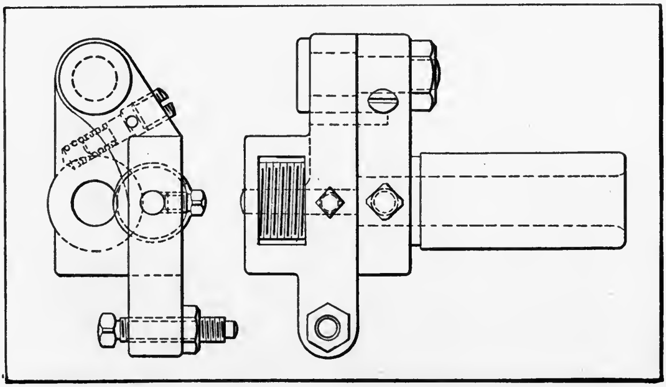

Fig. 51. Swing Holder for Thread Rolling

Cleveland Thread-rolling Attachment. — The thread-rolling attachment shown in Fig. 52 is similar in construction to the independent cut-off attachment used on the Cleveland automatic, except that the roll holder and thread roll replace the cut-off blade and holder. The thread roll *A* rotates on a pin *B*, and arm *C* is pivoted at the center and operated by a cam attached to a disk on the camshaft seen at the rear. This cam may be adjusted according to requirements. The roller at the rear end of arm *C*, which engages the cam, is mounted on an eccentric stud so that fine adjustments may be obtained for the thread roll.

Acme Thread-roll Holder. — A type of thread-roll holder commonly used on the Acme multiple-spindle automatic screw machine is shown in Fig. 53. The thread roll is presented radially to the work and slightly off center, so as to permit the tool to spring away a certain amount to follow the curvature of the stock. This makes it unnecessary to set the tool absolutely correct in regard to position for depth of thread. The spring of the tool should not be excessive, but just enough to relieve the strain which would be imposed on the tool if it were in a central position. Fig. 54 illustrates how a thread roll and holder of similar form is applied to the work on an Acme machine. The thread roll is held in a side-working slide in the third position and, in this particular case, a shaving tool operates in the second position.

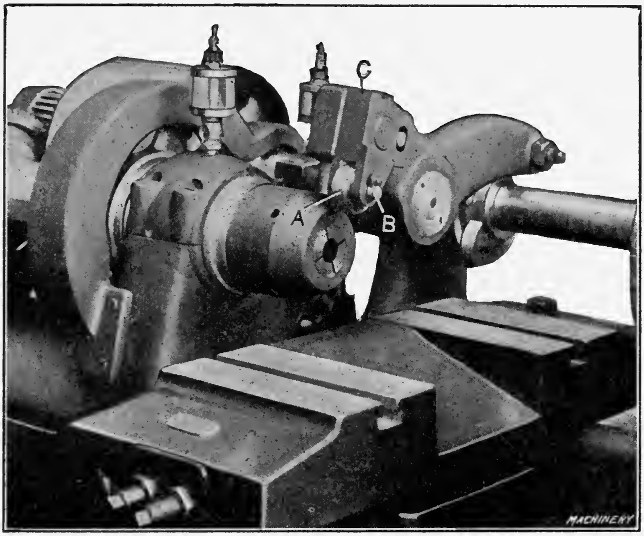

Fig. 52. Thread-rolling Attachment Applied to Cleveland Automatic

Cutting Helical Gears in Screw Machine. — The ribbon spools of a certain typewriter are rotated by a system of shafts and gearing, which includes a pair of small spiral or helical gears. These gears formerly were cut on small hand-operated gear-cutting machines of special design, which performed the operation in the same way that helical gears are cut in a milling machine; that is, the blank was fed forward and rotated at the same time under a revolving formed cutter. It was then returned to the starting position again, indexed and fed forward for a second cut — and so on until all the teeth were formed. The tools and operations employed for doing this work on a Brown & Sharpe automatic screw machine will be described. The effectiveness, rapidity, and comparative simplicity of the mechanism indicate the versatility of the automatic screw machine.

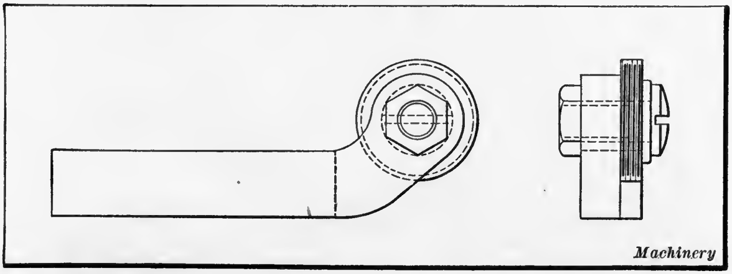

Fig. 53. Thread Roll used on Acme Multiple-spindle Automatic

Helical Gear Generating Tool. — The tool used for generating the teeth of the helical gears is shown in Fig. 55. When this tool comes into action, the blank has been formed in the machine as shown at *C* in Fig. 56. The hole has been drilled and reamed and the outside diameter formed to the required dimensions. When the tool is brought up to the work, the three-cornered driving center *G* enters the drilled hole, and is thereby caused to revolve with the blank. As it is screwed firmly into the long driving gear *H* (Fig. 55) the latter is also set in motion in unison with the spindle of the machine. Gear *H* has helical teeth cut on it engaging mating teeth in helical gear *J*, which is mounted on a short horizontal shaft having spur gear *K* keyed to it at the rear end. This gear, through a large idler *L*, drives gear *M*, which is keyed to the cutter spindle *S*. Cutter *N* mounted on the spindle has the form of a helical gear properly cut to mesh with the gear to be formed. It is made of hardened tool steel and is ground on one face, which face is set as shown in the end view, so that it is in the plane of the axis of the work. By means of the train of gearing just described, cutter *N* may be caused to revolve in unison with the work as if it were in mesh with the latter after the teeth have been cut.

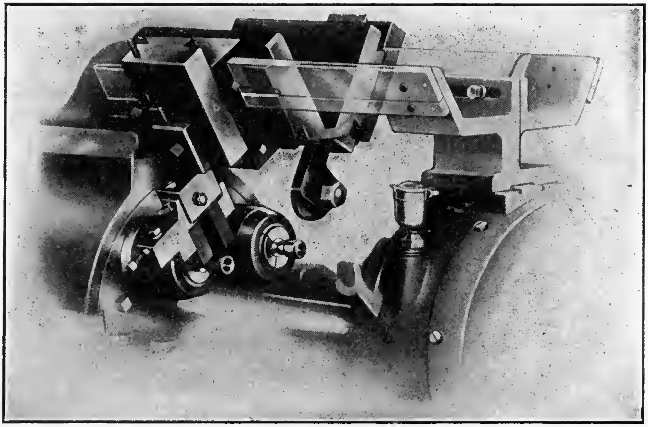

Fig. 54. Shaving Tool and Thread Roll on an "Acme" Multiple-spindle Automatic

Driving center *G* and the front bearing of gear *H* are supported in a sliding bushing *O* seated in the body *P* of the tool. A plunger *Q* in the shank of the tool is pressed by a long and stiff spring against the end of the bearing of gear *H*. This serves to keep *G* pressed into the hole in the work. As the tool advances over the work, center *G* and gear *H* are forced back with relation to the holder, remaining stationary so far as endwise movement is concerned with relation to the work. The thrust between *Q* and the end of *H* is taken by a hardened ball-pivot bearing as shown, so that there is little friction. The extended lip on the bushing *O* is simply for the purpose of providing the long keyway shown, which engages a pin in the body *P* to prevent *O* from turning. When the tool is not in contact with the work, screw *R* limits the outward movement of *G*, *H*, and *O* produced by spring plunger *Q*.

Operation of Cutting the Teeth. — Consider now that there is a gear blank in the machine with the teeth all cut, but not yet severed from the bar, and suppose the cutter *N* to be meshed with it as shown at *D* in Fig. 56. Suppose further that the spindle of the machine has been stopped. If now the turret-slide be moved forward or back from the position shown, so that the generating tool is moving forward or back over the

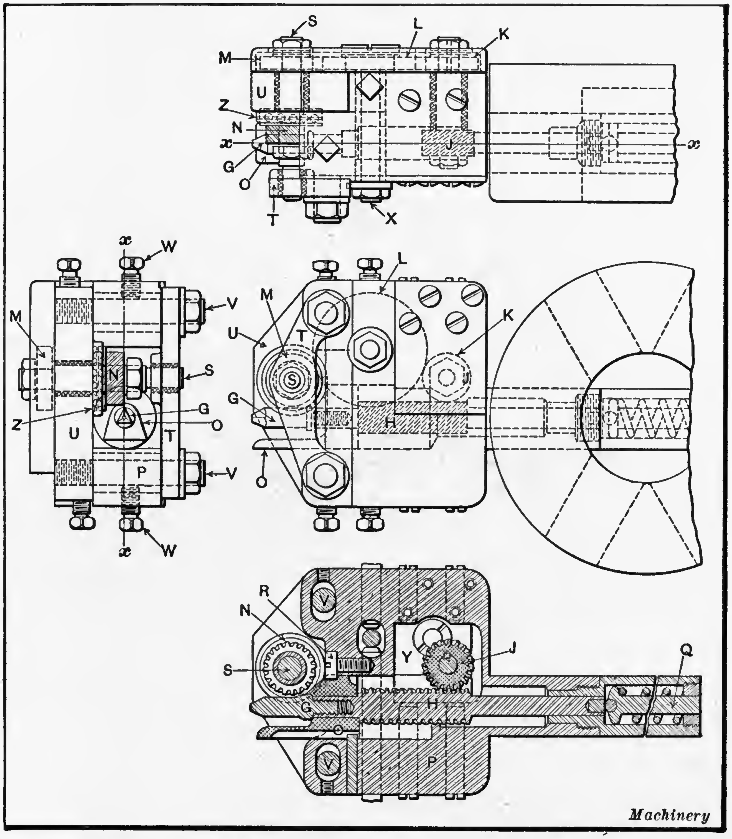

Machinery

Fig. 55. Tool for Generating Teeth of Helical Gears in Automatic Screw Machine

work, center *G* and gear *H* remain stationary with reference to the work, but move back and forth with relation to the tool-holder. This axial movement of gear *H* will evidently rotate helical gear *J*, which, through the train of spur gears *K*, *L*, and *M* will rotate the cutter *N*. The ratio of this train of gearing is such that the rotary movement given to *N* by the longitudinal movement of the tool-holder in either direction keeps it exactly in step with the teeth of the work. Thus the movement of the turret-slide rolls the cutter on the work just as if the cutter were mounted perfectly free on its axis and were rolled by the teeth of the work, instead of through the train of gearing described.

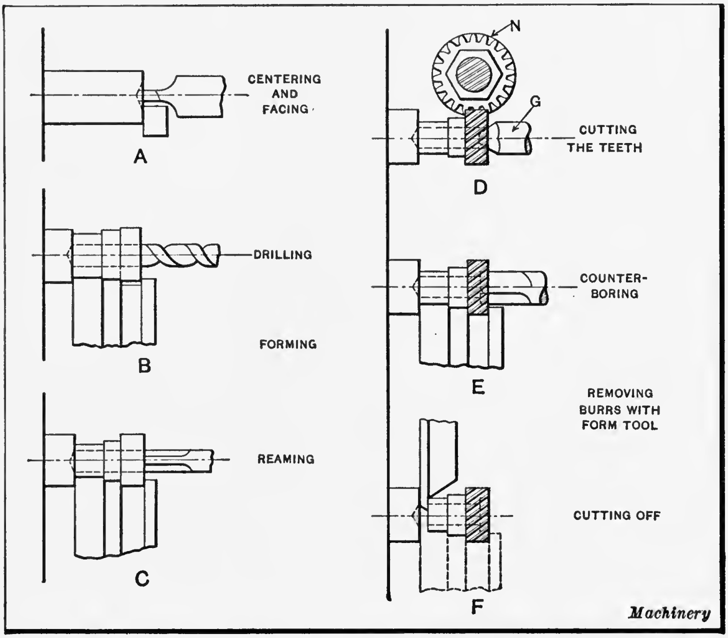

Fig. 56. Successive Operations on Helical or Spiral Gears produced in Automatic Screw Machine

Consider further, with the cutter and the work set in the relation shown in Fig. 56, that the turret-slide of the machine is fixed in position, but that the spindle and the work is rotated. The rotation of the gear revolves the three-cornered driving center *G*, which, in turn, transmits its motion to gear *H* (Fig. 55) and thence to gears *J*, *K*, *L*, *M*, and cutter *N*. The ratio of this train of gearing is again such that the rotary movement thus given the cutter is in the proper ratio to keep the latter in step with the teeth cut in the work, so that the work and cutter revolve together as if they were a pair of helical gears driving each other, with no connection through the train of gearing.

It has thus been shown that the cutter will be kept in step with the work, if the tool is moved axially back and forth over the work while the latter is stationary. It has also been shown that the cutter will keep in mesh with the work, while the latter is revolving and the turret-slide and the tool are stationary. Since the cutter and work are kept in step under these two conditions separately, they are still in step when the two movements are combined. This tool and its arrangement of gearing can thus be moved back and forth over the revolving work without throwing the teeth in the cutter and the teeth in the work out of step with each other, assuming that the tool is not moved back so far that driving center *G* loses its contact with the work, as the proper meshing of the cutter depends upon the driving connection between *G* and the blank. If *G* is ever moved back out of contact with the blank, this connection is broken, and, when the cutter is again moved forward onto the work, it will probably be found out of step.

The action of cutter *N* will be readily understood, now that the method of driving has been explained. The face, which is in the plane *xx* of the axis of the work, as shown in the end view, is the cutting edge. As the tool is forced onto the work, this revolving cutting edge, having the exact shape of the helical gear which is to engage with the work, cuts teeth of that exact shape on the blank as it is gradually forced over it. The operation is an example of the molding-generating principle, the cutter *N* molding the proper surface to mesh with its own teeth.

Details of Generating Tool. — The shank of the tool is made very long, as this permits the use of a spring for plunger *Q* which is long enough so that its pressure will not be materially greater when the cutter is pushed clear over the work at the completion of the cut, than when center *G* first enters the hole in the work. If the pressure should materially increase, there would be danger that *G* might be pressed further into the edge of the hole, thus disturbing the axial relation of *G* and the blank, and, consequently, throwing the cutter and the work out of step with each other by that amount. The use of the long spring prevents such trouble.

The cutter spindle *S* is mounted in bronze-bushed bearings in front and back plates *T* and *U*, which are clamped together and to the body *P* of the tool by studs and nuts *V*. These studs, as shown in the sectional view, pass through elongated slots in the body, so that the cutter spindle may be adjusted for a larger or smaller diameter of work by means of set-screws *W*, the adjustment being locked by nuts *V*. This adjustment would, of course, disturb somewhat the correct meshing of gears *L* and *M*. Gear *L* is, therefore, mounted on a stud *X* which floats in an enlarged hole in the body, and so may be adjusted by means of suitable set-screws which bring it into proper mesh with both *M* and *K*. The shaft on which the latter is mounted is also carried in a sliding block *Y*, by means of which gears *J* and *H* can be moved into closer or freer mesh. After the cutter has been set to the proper diameter for the work, the whole system of gearing may thus be adjusted to mesh properly. It is advisable to have as little backlash as possible between the cutter and the driving center to prevent the former from jumping or chattering when first beginning the cut. When there is much backlash, the ends of the teeth where the cut begins are not formed to quite the proper shape. While there is no great harm in this in the case of a helical gear, in which the contact takes place in the center of the face, it gives a poor appearance to the work, and so should be avoided.

The thrust of the revolving work, pressing down on the cutter when the tool is in action, is taken by a ball bearing at *Z*. This is the only point where there would be any great danger of excessive friction, so that the probability of *G* slipping in the work, due to too great a resistance in the mechanism it has to drive, is obviated. As previously explained, the cutting edge of the cutter must be in the plane of the center-line of the work. In the tool shown, no special provision is made for maintaining this condition. As the face of the cutter is sharpened, it is necessary to pack it out with filling washers. In later designs, adjustments are provided for bringing the cutting point on a line with the center.

Order of Operations in Making the Gears. — The first operation after feeding the stock is centering and facing, as shown at *A*, Fig. 56. This is done with a tool held in the turret. The turret is next revolved two holes, and the drill is brought into action. Then the turret is revolved again and the hole is reamed. The reamer is mounted in a "floating holder" which enables the reamer to be centered accurately, so that it will cut to size and take off an equal amount with all of its teeth. While the drilling and reaming are going on, the blank is being formed by a circular form tool mounted in the front cross-slide, as shown at *B* and *C*. The operation of cutting the teeth at *D* has already been described. At *E*, the hole is counterbored. This counterboring incidentally removes the marks made by the sharp corners of driving center *G*. At *F*, the completed piece is severed from the bar. While the counterboring is in progress, and during the first part of the cutting-off operation, the front form tool, as shown at *E* and *F*, is again brought down to clean off the burrs produced by the gear-cutting tool. The gear proper has a face width of 0.187 inch and a diameter of 0.421 inch. The material is brass, and the time for making one gear complete, 22 seconds.

Measuring Screw Machine Chips. — It is the practice of some screw machine operators to measure the thickness of the chips in order to determine the feeds of the tools. This practice is misleading because of the tendency of the metal to compress in one direction and swell and stretch in the other, when separated from the bar by the cutter. In order to obtain data on the difference between the feed of the cutter and the thickness of the chips, some tests were made on a Brown & Sharpe automatic screw machine. A cam, the exact size and travel of which was known, was placed on the machine, and the machine was geared to rotate the cam at a given speed. The exact speed of the spindle was also determined, and in this way the exact feed of the cutter was known.

These tests showed that a form tool, $\frac{1}{4}$ inch wide, having a feed of 0.001 inch per revolution, cut a chip which measured 0.0025 inch when cutting brass, while a form tool $\frac{5}{8}$ inch wide, with a feed of 0.0015 inch per revolution, cut a continuous chip 0.005 inch thick. A cut-off tool $\frac{1}{8}$ inch wide, cutting brass and fed 0.001 inch per revolution, produced chips from 0.0015 to 0.002 inch thick. The proportions between the feed and the chip for the turret tools were slightly greater than for the cross-slide tools; that is, the chip expanded slightly more. The tests for steel indicated a smaller expansion than for brass. Often a cam designer is criticized by the operators for providing excessive feeds, when this is not really the case, the apparent error being due to the erroneous method used by the operators in measuring the feed. The error that would result in the design of cams, if the draftsman worked to data obtained by measuring the chips is, however, apparent.

Speeds and Feeds. — The following information on the speeds and feeds for automatic screw machine operation is intended only as a general guide, since both the feed and speed are often affected considerably by the nature of the operations, variations in cutting qualities of tools made from different kinds of steel, and differences in degree of hardness of material of the same general class. The type and general condition of the machine that is used may also be important factors.

The feeds and speeds given in the accompanying table are not intended to represent either the minimum or maximum in any case, but the average range of feeds and speeds used on machines of ordinary size. In referring to this table, it is important to bear in mind that the rate of feed per revolution is often affected considerably by the speed, some automatic screw machines being naturally adapted for comparatively

Ordinary Ranges of Speeds and Feeds for Automatic Screw Machines

Material	Type of Cutting Tool	Steel used for Tools	Surface Speed, Feet per Minute	Feed per Revolution, Inch
Brass	Box-tool	Carbon	160–180	0.004 to 0.015
	Box-tool	High-speed	225–250	
	Hollow Mill	Carbon	160–180	0.005 to 0.017
	Hollow Mill	High-speed	225–250	
	Forming	Carbon	150–175	0.0008 to 0.003
	Forming	High-speed	200–275	
	Drills	Carbon	160–180	0.003 to 0.015
	Reamers	Carbon	115–125	0.007 to 0.030
	Reamers	High-speed	145–160	
	Dies	Carbon	40–65	....
	Dies	High-speed	80–130	....
	Cutting-off	Carbon	150–175	0.0015 to 0.004
Gun Screw Iron	Box-tool	Carbon	80–90	0.003 to 0.010
	Box-tool	High-speed	100–130	
	Hollow Mill	Carbon	80–90	0.004 to 0.012
	Hollow Mill	High-speed	100–130	
	Forming	Carbon	75–90	0.0005 to 0.0020
	Forming	High-speed	90–125	
	Cutting-off	....	....	0.0012 to 0.0025
	Drills	Carbon	60–70	0.002 to 0.010
	Drills	High-speed	100–125	
	Dies	....	25–30	....
	Reamers	Carbon	35–40	0.008 to 0.020
	Reamers	High-speed	60–75	
Drill Rod and Tool Steel	Box-tool	Carbon	35–45	0.003 to 0.007
	Box-tool	High-speed	45–60	
	Hollow Mill	Carbon	35–45	0.0035 to 0.008
	Hollow Mill	High-speed	45–60	
	Forming	High-speed	45–60	0.0002 to 0.0010
	Dies	High-speed	15–25	....
	Drills	Carbon	30–40	0.002 to 0.010
	Drills	High-speed	40–60	
	Reamers	Carbon	20–25	0.006 to 0.015
	Reamers	High-speed	30–40	

high speeds and fine feeds, whereas other machines rotate the work more slowly, but are capable of heavier feeds. The feed for box-tools not only varies for different materials, but should be selected with reference to the thickness of the chip or the depth of the cut. The feed for forming tools should be varied in accordance with the width of the tool and the diameter of the smallest part to be formed. In general, a tool from about $\frac{1}{8}$ to $\frac{3}{16}$ inch wide is adapted to the coarsest feed. For tools that are either very much narrower or wider, the feed should be reduced accordingly. The effect which the tool width and the minimum diameter have upon the feed account for the wide range of feeds given in the table for forming tools.

The following general information on feeds and speeds is given by the Brown & Sharpe Mfg. Co. The feeds and speeds referred to are merely intended as a general guide, and, in order to obtain satisfactory results, it is necessary to use an ample supply of good cutting oil or cooling lubricant, such as lard oil.

Speeds and Feeds for Brass. — For brass of ordinary quality, the machine can run at its fastest speed. In the case of a No. 00 machine, the maximum spindle speed is 2400 revolutions per minute, and the largest diameter that can be turned is $\frac{5}{16}$ inch, so that the maximum surface speed is 197 feet per minute. On the Nos. 0 and 2 machines, the maximum speeds are 294 and 275 feet per minute, respectively. Hollow mills when used on brass can be given a feeding movement of from 0.006 to 0.015 inch per revolution, the amount depending upon the depth of the cut. The feed of box-tools for finishing brass should be about 0.010 inch per revolution, and, for cutting-off tools, from 0.0015 to 0.002 inch per revolution, the feed being reduced as the tool reaches the center of the work. Forming tools are usually fed from 0.0008 to 0.0015 inch per revolution, although the feeding movement is reduced to 0.0005 inch, in some cases. Drills varying from $\frac{1}{8}$ to $\frac{1}{4}$ inch in diameter can be fed from 0.003 to 0.006 inch per revolution; for smaller drills, the feeds are reduced from 0.003 to 0.0015 inch.

Speeds and Feeds for Gun Screw Iron. — Gun screw iron, when using a fine feed, can be given a speed of from 80 to 90 feet per minute for either hollow mills, box-tools, cutting-off tools, or forming tools. Hollow mills for roughing can be fed from 0.004 to 0.012 inch per revolution. Box-tools for finishing, when taking a finishing cut of average depth, which is about 0.010 inch, can be fed from 0.010 to 0.012 inch per revolution, but the feed should be reduced, if the tool is to be used for facing shoulders or for similar operations. Cutting-off tools can be fed from 0.0012 to 0.0017 inch per revolution. For forming tools, the feed usually varies from 0.0002 to 0.001 inch, the amount depending upon the width and finished size of the work. Drills should be fed about one-third lower than for brass, and, when drilling deep holes, the feed should be reduced towards the bottom. Dies and taps, when operating on gun screw iron, should not have a cutting speed exceeding 30 feet per minute.

Speeds and Feeds for Machine Steel and Drill Rod. — Soft machine steel can be cut off and formed at a speed of about 80 feet per minute, but, for threading operations, this should be reduced to from 20 to 30 feet per minute. The feed per revolution can usually be about the same as for iron. It is often necessary to run bronze at about the same speed as machine steel. Drill rod is often operated at speeds varying from 50 to 60 feet per minute, but only when using very fine feeds. The feed usually ranges from 0.003 to 0.007 inch per revolution. For threading drill rod, the speed should not exceed 15 or 20 feet per minute.

It is the practice of the Brown & Sharpe Mfg. Co. to use fast speeds and fine feeds for most operations, although the relation of the feed and speed is often varied to suit different classes of work. The speeds and feeds referred to in the foregoing are intended for carbon steel tools. When using high-speed steel, these speeds can be increased approximately 50 per cent for mild steel and from 30 to 35 per cent for drill rod, assuming that the same feeds are used.

Feed for Thread Rolling. — When rolling threads, the feed is varied in accordance with the diameter of the blank to be threaded and the number of threads per inch. The type of holder used also affects the feed. If the roll is held in a holder attached to the cross-slide and is presented either tangentially or radially to the work, it can be fed at a faster rate than if it is held in a swing tool, because, in the former case, it is held more rigidly. The feeds for thread rolling may vary from 0.0005 to 0.010 inch per revolution, and, in some cases, coarser feeds are employed. When using a cross-slide type of roll-holder, the following feeds would prove satisfactory on a Brown & Sharpe machine: For 80 threads per inch and a blank diameter of $\frac{1}{4}$ inch, 0.006-inch feed; for a blank diameter of $\frac{1}{2}$ inch, 0.008-inch feed; for a blank diameter of 1 inch, .010-inch feed. For 40 threads per inch and a blank diameter of $\frac{1}{4}$ inch, 0.003-inch feed; for a blank diameter of $\frac{1}{2}$ inch, 0.005-inch feed; for a blank diameter of 1 inch, 0.007-inch feed. For 24 threads per inch and a blank diameter of $\frac{1}{4}$ inch, 0.0005-inch feed; for a blank diameter of $\frac{1}{2}$ inch, 0.0025-inch feed; for a blank diameter of 1 inch, 0.0045-inch feed. When using a holder of the swing type, these feeding movements should be reduced about 25 or 30 per cent.

Feeds for Drilling. — When selecting the feeds for drills, the diameter of the drill should be considered. For instance, when drilling brass, a drill $\frac{1}{16}$ inch in diameter should be given a feed of about 0.0018 inch per revolution; if the drill diameter were $\frac{1}{8}$ inch, the feed should be increased to approximately 0.003 or 0.004 inch; if the drill diameter were $\frac{1}{4}$ inch, the feed should be from 0.005 to 0.007 inch; and, if the drill diameter were $\frac{1}{2}$ inch, it should be from 0.007 to 0.010 inch per revolution, and, for larger sizes, still coarser feeds could be employed.

When using Brown & Sharpe automatic screw machines, the best results are generally obtained by employing light feeds for drills and rather high peripheral velocities. High-speed steel drills are preferable for drilling Norway iron, machine steel, tool steel, etc., but ordinary carbon steel drills are suitable for brass and similar materials, when the cutting speeds do not exceed those given in the table. When the cutting speed is relatively low, the feed can be increased accordingly, but it is more satisfactory in general practice to use a fine feed and a high speed, as a straighter hole can be produced by this method.

Counterboring and Reaming Feeds. — The surface speed for counterboring should be slightly less than the speed for drilling. The feed depends upon the type of counterbore used, as well as the material being cut and the depth of the cut. When using a counterbore having three cutting edges, the feed for brass usually varies from about 0.003 to 0.008 inch per revolution, the amount depending upon the diameter of the counterbore and the depth of the cut. For machine steel, the feed would be somewhat less, ranging from about 0.002 to 0.006 inch per revolution. The feed used for reaming depends not only upon the diameter of the reamer and the material being reamed, but also upon the allowance left for the reaming operation, and varies widely, as shown by the table. In general, the allowances should be as follows: Diameter of hole, $\frac{1}{8}$ inch, allowance, 0.005 inch; diameter of hole, $\frac{1}{4}$ inch, allowance, 0.007 inch; diameter of hole, $\frac{1}{2}$ inch, allowance, 0.010 inch; diameter of hole, 1 inch, allowance, 0.016 inch.

INDEX

ACCELERATING type of reaming attachment, 207
Accelerating type of cross-drilling attachment, 202
Acme accelerating reaming attachment, 207
Acme cross-drilling attachment, 202
Acme milling attachments, 209
Acme multiple-spindle automatic, 39
  adjustment of, 170
  camshaft, 44
  camshaft speed-changing mechanism, 45
  feeding stock through spindle, 51
  general description, 39
  indexing mechanism, 49
  mechanism for threading, 52
  operation of cross-slides, 48
  operation of spindle chuck, 50
  operations on, 290
  speed of main driving shaft, 47
  spindle-driving mechanism, 43
  standard tool positions, 41
Acme over-cut box-tools, 98
Acme thread-rolling tool, 322
Adjustment of automatic screw machines, 148
Allowances for reaming, 125
Allowances for shaving cuts, 130, 131
Aluminum, use of roller supports in turning, 109
Angle of centering tool, 115
Angles, cutting, for box-tool cutters, 111
Application of automatic screw machines, general, 7
Assembling parts in automatic screw machine, 304
Attachment, for hobbing worm and spiral gears, 215
Attachment for self-opening dies, 137
  for drilling, 200
  for forming squares and hexagons, 213
  for milling, 209
  for screw slotting, 197
  magazine feeding, 219
Automatic, application of term, 2
Automatic screw machines, adjustment, 148
  advantages of single- and multiple-spindle designs, 8
  classification, 4
  development of multiple-spindle type, 6
  development of single-spindle type, 5
  general features, 3
  multiple-spindle designs, 39
  single-spindle designs, 11

BACK-SLIDE cam, method of laying out, 241
Boring and recessing tools, 125
Box-tool cutters, cutting angles, 111
  holding and adjusting, 106
  methods of applying, 104
  radial and tangential positions for, 104
  size of steel, 113
Box-tools, 94
  over-cut type, 98
  spring-releasing type, 99
  setting, on Acme machine, 178
  taper turning, 101
Box-tool work supports, 108
  holding and adjusting, 109
  position relative to cutter, 112
Brass, speeds and feeds for, 332
Brown & Sharpe burring attachment, 205

Brown & Sharpe cross-drilling attachment, 201
Brown & Sharpe index drilling attachment, 200
Brown & Sharpe screw machines, deflector for chips, 18
  general method of setting up, 158
  general description, 11
  operation of cross-slide, 15
  operation of turret-slide, 16
  reversal of spindle for threading, 18
  sample record of cam and tool equipment, 159
  spindle speed changes, 18
  stock-feeding and chuck-operating mechanism, 15
Brown & Sharpe screw slotting attachment, 197
Brown & Sharpe tap and die revolving attachment, 206
Brown & Sharpe taper-turning tool, 102
Brown & Sharpe turret drilling attachment, 205
Burring attachment, 205

CAM blanks, Brown & Sharpe, 234
Cam circumference, proportioning, 233
Cam design, allowance for tool clearance, 247
  effect of cutting speed on, 225
  general procedure, 225
  lobe for thread cutting, 243
  rise for drilling, 255
Cams for making a screw, 227
Cams for recessing, laying out, 253
Cams for screw machines, designing, 224
Cams, function of lead, front-slide and back-slide, on B. & S. Machine, 224
Cam-lever templets, use of, 250
Cast iron, use of roller supports in turning, 109
Centering and facing tools, 114
Centering-tool holder, 115
Centering tool, included angle of point, 115
Centering tools and drills, setting, 154
Change-gears, table of No. 00 Brown & Sharpe machine, 233
Chicago screw machine, general description, 35
  camshaft and main cam, 36
  chuck feeding mechanism, 36
  feeding movements for tools, 38
  method of cutting threads, 37
  operation of cross-slides, 37
  turret mechanism, 36
Chips, measurement of, to determine feed, 329
Circular forming and cutting-off tools, holder for, 88
  setting, 149
Circular forming tools, methods of applying, 85, 89
Clearance for circular tools, 90
Clearance for tools in laying out cams, 247
Cleveland automatic, adjustment of, 161
  chuck-operating mechanism, 22
  examples of work on, 281
  feed-regulating drum, 29
  general description, 20
  operation of cross-slide, 28
  spindle-driving mechanism, 22
  stock-feeding mechanism, 25
  turret and turret-slide, 26
  variable feeding mechanism, 28
Cleveland independent cutting-off attachment, 211
Cleveland magazine feeding attachments, 219
Cleveland silent die-holder, 135
Cleveland slotting and slabbing attachment, 199
Cleveland thread-rolling attachment, 321
Compensating stops for multiple-spindle machines, 60
Cone-point turning in screw machine, 274
Counterbores, amount of taper for, 120
  holders, 123
  location of cutting edge, 120
  reasons for defective operation, 119

Counterbores and reamers, setting, 154
Counterboring and drilling from cross-slide, 266
Counterboring and reaming feeds, 335
Counterboring tools, 119, 122
Cross-drilling attachment, 201
Cross-drilling attachment of opposed spindle type, 204
Cross-drilling, example of work requiring, 294
Cutters for box-tools, 104
  cutting angles, 111
  holding and adjusting, 106
  position relative to work supports, 112
  size of steel, 113
Cutting-off and forming tools, rake of, 93
  setting on Acme machine, 177
Cutting-off attachment, Cleveland, 211
Cutting-off tool-holder, universal, 91
Cutting-off tools, 92
  inclination of cutting edge, 229
  thickness of blade, 93

DAVENPORT multiple-spindle automatic, 55
  cam equipment for, 192
  compensating stops, 60
  cross-slides and swinging arms, 58
  driving mechanism for camshaft, 58
  general description, 55
  indexing the spindle head, 60
  method of cutting thread, 62
  method of driving spindles, 55
  operation of tool spindles, 56
  sample record of operations, 193
  setting-up, 189
  speeds and feeds recommended, 63
Deep-hole drilling, designing cam for, 257
Die- and tap-holder, telescopic, 136
Die and tap revolving attachment, 206
Die-holders, 133
  Cleveland silent type, 135
  releasing, 134
Dies and taps, setting, 155
Dies, attachment for self-opening, 137
Dies for screw machine work, 132
Drill-holder, high-speed, 118
Drill-holders for screw machines, 118
Drilling and counterboring from cross-slide, 266
Drilling and milling attachment, Acme, 209
Drilling attachment, cross-, 201
  index, 200
Drilling, feeds for, 334
  laying out cams for, 255
Drill rod, speeds and feeds for, 333
Drills and centering tools, setting, 154
Drills, flat, 122
  for screw machine work, 116

END-MILLING or slotting attachment, 211
  facing and centering tools, 114

FEED, determining, by measuring chips, 329
  for thread rolling, 333
Feeding attachments, magazine, 219
Feeds and speeds, 330
  for different tools and materials, 331
Feeds, for counterboring and reaming, 335
  for drilling, 334
Flat forming tool-holders, 90
Flutes, number in taps, 139
Forming and cutting-off tools, rake of, 93
  setting, on Acme machine, 177
Forming operations, examples of, 260
Forming tools, methods of applying, 85, 89
  tool-holders for flat, 90
Front-slide cam, method of laying out, 242
  gears, helical or spiral, cutting in screw machine, 323

GUN screw iron, speeds and feeds for, 332
Gridley multiple-spindle automatic, 71
  camshaft and cams, 74
  feeding movements, 73

Gridley multiple-spindle automatic, general description, 71
  idle movements, 73
  method of cutting threads, 76
  tool-slide, 73
Gridley single-spindle automatic, application of motor drive, 35
  arrangement of cams, 33
  arrangement of turret, 30
  general description, 30
  operation of forming and cutting-off tools, 33

HAYDEN multiple-spindle automatic, 64
  adjustable cams for tool spindles and cross-slides, 68
  chuck-closing mechanism, 66
  general description, 64
  operation of master cam, 66
  thread cutting operations, 71
  time required for making one piece, 69
Helical gears, cutting in screw machine, 323
Hexagon and square forming attachment, 213
Holders, for centering tools, 115
  for circular forming and cutting-off tools, 88
  for counterbores, 123
  for flat forming tools, 90
  for reamers, 127
Hollow mills, 113
Hollow mills or box-tools, setting, 153
Hollow roughing mill, 98

INDEX drilling attachment, 200

KNURL-HOLDER, double type for cross-slide, 143
  opening and closing type, 143
Knurling tools, 140
Knurls, concave, 145
  different methods of applying, 144
  spiral, 146
  straight, 145
Knurl teeth, angles for different materials, 145
  calculating depth of, 145

LEAD CAM, function of, on Brown & Sharpe machine, 224
  method of laying out, for Brown & Sharpe machine, 236

MACHINE steel, speeds and feeds for, 333
Magazine feeding attachments, 219
Milling attachments, Acme, 209
Multiple- and single-spindle designs, relative advantages, 8
Multiple-spindle screw machine development, 6
Multiple-spindle screw machines, 39

NEW BRITAIN multiple-spindle screw machine, 76
  indexing mechanism, 80
  spindle construction, 78
  thread cutting mechanism, 82
  tool slide, 79
Non-releasing type of die-holder, 133

OPERATIONS on screw machines, miscellaneous, 258
  pointing end of work, 259

PRODUCTION rate, calculating for Acme machine, 172

RAISING block for swing tools, 128
  methods of setting on Brown & Sharpe machines, 157
Reamer holders, 127
Reamers and counterbores, setting, 154
Reamers for screw machine work, 125
Reamers, taper of, 125
Reaming allowances, 125
Reaming and counterboring feeds, 335
Reaming attachment, accelerated, 207
Recessing and boring tools, 125
Recessing, laying out cams for, 253
Recessing operation, 265

Recessing swing tools, 129
Record of cam and tool equipment on Brown & Sharpe machine, 159
Record of operations on Davenport machine, 193
Releasing die-holder, 134
Roller supports for box-tools, 95, 96, 109, 111
Rolling threads in screw machine, 314
Roller type of steadyrest, 113
Rotary magazine attachment, 221

SCREW MACHINE, adjustment, 148
  cams, designing, 224
  classification, 4
  development, 5
  general features, 3
  multiple-spindle designs, 39
  operations, miscellaneous, 258
  origin of term, 1
  relative advantages of single- and multiple-spindle designs, 8
  single-spindle designs, 11
  use of, for machining and assembling, 304
Screw slotting attachments, 197
Setting-up automatic screw machines, 148
Shaving operation, allowances for, 130, 131
Shaving tools for screw machines, 130
Single- and multiple-spindle designs, relative advantages, 8
Single-spindle screw machine development, 5
Slab milling attachments, 209
Slotting and slabbing attachment, 199
Speeds and feeds, 330
  for different tools and materials, 331
Spiral gear-hobbing attachment, 215
Spiral gears, cutting in screw machine, 323
Spiral knurls, determining lead of teeth, 147
  determining number of teeth around circumference, 146
Spring-releasing box-tools, 99
Spring screw threading dies, making, 132
Square and hexagon forming attachment, 213
Steadyrest of roller type, 113
Steel for box-tool cutters, size of, 113
Steel for box-tool supports, 109
Stop for stock, setting, 152
Supports, work, for box-tools, 108
  holding and adjusting, 109
Swing tools, for turning, 128
  methods of setting raising block for operating, 157
  raising block for, 128
  recessing, 129
  setting, 156

TAP- and die-holder, telescopic, 136
Tap and die revolving attachment, 206
Taps and dies, setting, 155
Taps, chamfer for different pitches, 139
  cutters for fluting, 139
  for automatic screw machines, 138
  for Norway iron and machine steel, 140
  number of flutes for, 139
  width of lands, 139
Telescopic die- and tap-holder, 136
Templet for dividing cam circumference, 238
Templet for laying out screw machine cams, 235
Templets, use of cam-lever type, 250
Thread cutting, development of cam lobe for, 243
  dies for screw machines, 132
  number of revolutions for, 229
  on Acme machine, 181
  on Davenport multiple-spindle automatic, 192
  on Gridley multiple-spindle automatic, 76
  on Hayden multiple-spindle automatic, 71
  on New Britain multiple-spindle automatic, 82
  reversal of spindle for, in B. & S. machine, 18

Threading-die holders, 133
Threading dies, methods of making spring screw type, 132
Thread rolling, Acme type of holder for, 322
  attachment, Cleveland, 321
  by means of swing tool, 320
  calculating blank diameter, 315
  Cleveland attachment for, 321
  feeds for, 333
  holder for passing roll over work, 319
  holder for passing roll under work, 320
  inclination of thread on roll, 315
  in screw machines, 314
  preparation of work for, 318
  shape of thread on roll, 316
  size of thread roll, 317
  steel for thread rolls applied to steel, 315
Thread roll, size of, 317
Tilting magazine attachment, 219
  rotary type of, 222
Tool clearance, allowance for, in cam design, 247
Tool equipment for screw machines, 84
Tool-holders for boring and recessing tools, 125
Tool-holder, universal cutting-off, 91
Turret drilling attachment, 205

UNIVERSAL cross-slide knurling tool, 141
Universal cutting-off tool-holder, 91

VERTICAL magazine feeding attachment, 220

WATCH parts, making, in screw machine, 271
Worm gear hobbing attachment, 215

3-10
~~4-7~~
39
148
158
170
199
201
205
209
314