M1820-23

NATIONAL
ARCHIVES
MICROFILM
PUBLICATIONS

IMAGE EVALUATION
TEST TARGET (QA-3)

150mm

6″

APPLIED IMAGE, Inc
1653 East Main Street
Rochester, NY 14609 USA
Phone: 716/482-0300
Fax: 716/288-5989

© 1993, Applied Image, Inc., All Rights Reserved

National Archives at College Park

8601 Adelphi Road College Park MD 20740-6001

T.W. Moon

OPERATOR

CAMERA

3-25-99

Z-5

DATE FILMED

REDUCTION RATIO

2461-0376-014-03

10X

FILM EMULSION NUMBER

1820

23

PROJECT NUMBER

ROLL NUMBER

National Archives and Records Administration

M1820

COMPILED MILITARY SERVICE RECORDS OF VOLUNTEER UNION SOLDIERS WHO SERVED WITH THE UNITED STATES COLORED TROOPS:

2d Through 7th Colored Infantry, Including 3d Tennessee Volunteers (African Descent) 6th Louisiana Infantry (African Descent) 7th Louisiana Infantry (African Descent)

Introduction written by Budge Weidman, Project Manager

Records prepared for microfilming by volunteers of the Civil War Conservation Corps

Pat Alfredson
Phyllis Altrogge
Kenneth Ashton
Sue Barnard*
Rex Bowser
Ann N. Brown
Jerry Brown
Robert Budway
Randy Caldwell
Mary Ann Castellana*
Mary Lou Cole
Giovanni Croce
B. H. Custer
Bob Denney
Earl Dunn
Yvette Fallin
Maria Flesher
Naomi Glass
Sue Goward*
Bert Greenstein
Anne Greenwood
Jim Harris
Walter Hayden
Mary Hayden
Pat Ikonen
Dick Ives
Sarah Jaffe
Barbara Kemp
Bev Manypenny
Frank Masterson
Joe Mazur
Kathleen McCarthy
Catherine McManus
Ben Miles
Dave Murray
Mary Poggioli
Peggy Pratt
Ray Puzio
Sylvia Scott
Lynn Shearouse
Charles Spencer
Mary Stack-Dunne
Ben Stearns
Bill Stormer*
Pat Sullivan
Gorman Tidball*
John Toole
Maryellen Toole
Dean Warner
Melody Warner
Milt Weatherhead
Russ Weidman
Robert Young

Team leaders are indicated by the asterisk.

National Archives and Records Administration
Washington, DC
1999

INTRODUCTION

On the 116 rolls of this microfilm publication, M1820, are reproduced the compiled military service records of volunteer Union soldiers belonging to the 2d through the 7th United States Colored Infantry units, including the 3d Tennessee Volunteers (African Descent) and the 6th and 7th Louisiana Infantries (African Descent). These units were part of the United States Colored Troops (USCT). The USCT included 7 numbered cavalry regiments; 13 numbered artillery regiments plus 1 independent battery; 144 numbered infantry regiments; Brigade Bands Nos. 1 & 2 (Corps d'Afrique and US Colored Troops); Powell's Regiment Colored Infantry; Southard's Company Colored Infantry; Quartermaster Detachment; Pioneer Corps, 1st Division, 16th Army Corps; Pioneer Corps, Cavalry Division, 16th Army Corps; Unassigned Company A Colored Infantry; and Unassigned USCT. The are also miscellaneous service cards arranged alphabetically by surname at the end of the unit records. The records reproduced are part of the Records of the Adjutant General's Office, 1780's–1917, Record Group (RG) 94.

Background

United States Colored Troops

Since the time of the American Revolution, African Americans have volunteered to serve their country in time of war. The Civil War was no exception. Official sanction was the difficulty. In the fall of 1862 there were four Union regiments of African Americans raised in New Orleans, LA: the 1st, 2d, and 3d Louisiana Native Guard, and the 1st Louisiana Heavy Artillery (African Descent). The 1st South Carolina Infantry (African Descent) was not officially organized until January 1863; however, three companies of the regiment were on coastal expeditions as early as November 1862. The 1st Kansas Colored Infantry was not mustered into Federal service until January 1863, even though the regiment had already participated in the action at Island Mound, MO, on October 27, 1862. These early unofficial regiments received little Federal support, but they showed the strength of the African American soldier's desire to fight for freedom.

The first official authorization to employ African Americans in Federal service was the Second Confiscation and Militia Act of July 17, 1862. This act allowed President Abraham Lincoln "to receive [African Americans] into the service of the United States, for the purpose of constructing entrenchments, or performing camp service, or any other labor, or any military or naval service for which they may be found competent." The President did not authorize use of African Americans in combat, however, until issuance of the Emancipation Proclamation on January 1, 1863.

In late January 1863 Governor John Andrew of Massachusetts received permission to raise a regiment of African American soldiers. The pace of organizing additional regiments was very slow. In March Secretary of War Edwin M. Stanton sent Gen. Lorenzo Thomas to the lower Mississippi Valley to recruit free and

contraband African Americans. Thomas was given broad authority. He was to explain the administration's policy regarding African American soldiers and recruit volunteers to raise and command them. Stanton wanted all officers of such units to be white, but that policy was softened to allow African American surgeons and chaplains. By the end of the war, in addition to the chaplains and surgeons, there were 87 African American officers. Thomas's endeavor was very successful, and on May 22, 1863, the Bureau of Colored Troops was established to coordinate and organize regiments from all parts of the country. Created under War Department General Order No. 143, the bureau was responsible for handling "all matters relating to the organization of Colored Troops." The bureau was directly under the Adjutant General's Office and its procedures and rules were specific and strict. All African American regiments were now to be designated United States Colored Troops (USCT). At this time there were some African American regiments with state names and a few regiments in the Department of the Gulf designated as Corps d'Afrique. The Corps d'Afrique units ultimately became numbered regiments in the USCT. The 54th and 55th Massachusetts Infantries (Colored), the 5th Massachusetts Cavalry (Colored), the 29th Connecticut Infantry (Colored), the 6th and 7th Louisiana Infantries (African Descent), the 3d Tennessee Volunteers (African Descent), and the 1st South Carolina Volunteers (Colored) retained their number and state designations.

To facilitate recruiting in the states of Maryland, Missouri, Tennessee, and eventually Kentucky, the War Department issued General Order No. 329 on October 3, 1863. Section 6 of the order stated that if any citizen should offer his or her slave for enlistment into the military service, that person would, "if such slave be accepted, receive from the recruiting officer a certificate thereof, and become entitled to compensation for the service or labor of said slave, not exceeding the sum of three hundred dollars, upon filing a valid deed of manumission and of release, and making satisfactory proof of title." For this reason, some records of manumission are contained in the compiled service records reproduced in this publication.

The USCT fought in 39 major engagements and over 400 lesser ones. Sixteen African American soldiers received the Congressional Medal of Honor. As it was in other units, the death toll from disease was very high in the USCT. Deaths from disease and battle totaled 37,000. The last regiment of the USCT was mustered out of Federal service in December 1867.

Important sources for information about African American units in the Civil War are the War Department's *The War of the Rebellion: A Compilation of the Official Records of the Union and Confederate Armies* (Washington, DC: 1880–1901; reprinted Harrisburg, PA, 1971 and 1985) and the Navy Department's *The War of the Rebellion: A Compilation of the Official Records of the Union and Confederate Navies* (Washington, DC: 1874–1922; reprinted Harrisburg, PA, 1971 and 1985). These multivolume works contain reports of operations and other official correspondence.

2d United States Colored Infantry

This regiment was organized at Arlington, VA, from June 23 to November 11, 1863, to serve 3 years. During its existence, the regiment served in New Orleans, LA, and Ship Island, MI. In 1864 the unit moved to Key West and participated in operations on the west coast of Florida. On February 20, 1865, Companies D and I took part in the attack on Fort Myers, FL. Subsequent service took place in the District of Florida until the regiment was mustered out on January 5, 1866.

3d United States Colored Infantry

This regiment was organized at Camp William Penn, Philadelphia, PA, from August 3 to 10, 1863, to serve 3 years. The regiment participated in the siege of Fort Wagner, SC, and operations against Charleston, SC. In 1864 the unit moved to Jacksonville, FL, and maintained duty in the area until being mustered out October 31, 1865.

3d Tennessee Volunteers (African Descent)

This regiment was organized in the spring of 1864 in Memphis, TN, for the defense of that city. Most of the men were transferred to the 7th United States Colored Heavy Artillery, which was redesignated the 11th United States Colored Infantry (New) on January 23, 1865. There are service records pertaining to the officers and men in the 3d Tennessee Volunteers as well as in the 11th United States Colored Infantry (New).

4th United States Colored Infantry

The regiment was organized at Baltimore, MD, July 15 to September 1, 1863, to serve 3 years. The unit participated in actions in Virginia at Bermuda Hundred, Petersburg, Dutch Gap, and Chaffin's Farm. In North Carolina the regiment took part in the battle and capture of Fort Fisher, Sugar Loaf Hill, and the city of Wilmington. In these actions the regiment sustained losses of 355 officers and men wounded, missing, or killed. The regiment was mustered out of service May 6, 1866.

5th United States Colored Infantry

This regiment was organized at Camp Delaware, OH, from August 6, 1863, to January 15, 1864, to serve 3 years. In Virginia the regiment served at Norfolk and Portsmouth and participated in major battles at Petersburg, Chaffin's Farm, and Fair Oaks. The regiment took part in the capture of Fort Fisher and the city of Wilmington in North Carolina. Its remaining service took place in North Carolina until it was mustered out on September 20, 1865.

NATIONAL ARCHIVES MICROFILM PUBLICATIONS

6th United States Colored Infantry

This regiment was organized at Camp William Penn, Philadelphia, PA, from July 28 to September 12, 1863, to serve 3 years. The unit participated in battles at Chaffin's Farm, Williamsburg, and Petersburg in Virginia and at Sugar Loaf Hill, NC. During these actions the regiment sustained losses of 237 killed, wounded, or missing. The regiment was mustered out September 20, 1865.

6th Louisiana Infantry (African Descent)

This regiment was organized for 60 days in New Orleans, LA, on July 4, 1863. The unit served at New Orleans and was mustered out August 13, 1863.

7th United States Colored Infantry

This regiment was organized at Baltimore, MD, from September 26 to November 12, 1863, to serve 3 years. The unit served in Virginia, Florida, and South Carolina. It was mustered out of service October 13, 1866.

7th Louisiana Infantry (African Descent)

This regiment was organized for 60 days in New Orleans, LA, on July 10, 1863. It served in New Orleans until it was mustered out on August 6, 1863.

Records Description

Compiled service records consist of a jacket-envelope for each soldier, labeled with his name, rank, unit, and card numbers. The compilation of service records of Union soldiers began in 1890 under the direction of Col. Fred C. Ainsworth, head of the Record and Pension Office of the Adjutant General's Office, Department of War. Information from muster rolls, regimental returns, descriptive books, and other records was copied verbatim onto cards. A separate card was prepared each time an individual name appeared on a document. These cards were numbered on the back, and these numbers were entered onto the outside jacket containing the cards. The carded information was verified by a separated operation of comparison; great care was taken to ensure that the cards were accurate.

A typical jacket contains card abstracts of entries found in original records relating to the soldier and original documents relating solely to that soldier. Examples of the latter include enlistment papers, substitute certificates, casualty sheets, death reports, prisoner-of-war memorandums, and correspondence. Unique to the records of the USCT are deeds of manumission, oaths of allegiance, proof of ownership, certificates of monetary award, and bills of sale. These items appear most frequently in units recruited in the border states of Kentucky, Missouri, and Maryland. These states remained in the Union but were slave states. Jackets and cards include a section labeled "bookmark," which was reserved for cross-references to other records relating to the individual or his unit. The service records are

arranged by arm of service, thereunder numerically by regiment or independent battalion or company, and thereunder alphabetically by name of the soldier. Records for officers are interfiled alphabetically by name with the records of enlisted men. If an individual served in more than one unit, which was typical for USCT officers, there will be a separate service record for each unit in which he served.

The unjacketed miscellaneous cards were accumulated by the War Department with the expectation that they would be incorporated in individual compiled service records. This expectation was never fulfilled, however, because either insufficient or contradictory information made it impossible to associate the cards or papers with a particular soldier's service records.

Related Records

Among the records of the Adjutant General's Office in the National Archives are many of the original records that were abstracted or "carded" by the Record and Pension Office. These include the individual unit's muster rolls, returns, and descriptive books. Other series in RG 94 that contain information relating to volunteer Union soldiers who served with the USCT include carded records relating to Union staff officers, carded medical records of volunteer Union soldiers, unbound and bound regimental records and "record of events" cards. The regimental records of the 54th Massachusetts Infantry (Colored) have been reproduced as Microfilm Publication M1659, *Records of the Fifty-fourth Massachusetts Infantry Regiment (Colored), 1863–1865.*

The "record of events" cards include information copied from the unit's muster rolls and returns. They show the stations of the field and staff and the companies of the regiment at the time the muster roll or return was prepared and sometimes mention battles, skirmishes, or other activities in which the regiment participated. The cards have been reproduced as Microfilm Publication M594, *Compiled Records Showing Service of Military Units in Volunteer Union Organizations.*

Record Group 94 also includes a card index for the USCT, reproduced as Microfilm Publication M589, *Index to Compiled Military Service Records of Volunteer Union Soldiers Who Served with U.S. Colored Troops*, which may be used to locate the regiment of a USCT soldier. An index card gives the name of the soldier and his rank, as well as the unit in which he served; sometimes there is a cross-reference to his service in other units or organizations. The National Archives is continually producing microfilm publications of volunteer Union compiled military service records. A complete listing of finished publications can be found in the National Archives *Microfilm Resources for Research: A Comprehensive Catalog,* which is available online at http://www.nara.gov.

The records of the Colored Troops Division, within RG 94, include division correspondence and records relating to recruiting, the appointment of officers, and the slave or free status of individuals, as well as a compilation of historical extracts

and official papers concerning the military service of African Americans from the colonial period through the Civil War entitled *The Negro in the Military Service of the United States, 1639–1886.* This compilation is reproduced as Microfilm Publication M858. The records of the Bounty and Claims Division, also in RG 94, include correspondence of the division and records relating to bounties and claims paid to loyal owners of slaves by the Slave Claims Commissions of Delaware, Kentucky, Maryland, Missouri, Tennessee, and West Virginia.

If a soldier applied for a pension, the pension application case file may be among the Records of the Veterans Administration (RG 15). Indexes to the pension applications have been reproduced as Microfilm Publications T288, *General Index to Pension Files, 1861–1934,* and T289, *Organizational Index to Pension Files of Veterans Who Served Between 1861 and 1900.*

If a soldier or officer was tried before a general court-martial or if an individual or his unit was the subject of a court of inquiry or military commission, transcripts of those proceedings may be among the Records of the Office of the Judge Advocate General (Army) (RG 153). The registers to the proceedings have been reproduced as Microfilm Publication M1105, *Registers of the Records of the Proceedings of the U.S. Army General Courts-Martial, 1809–1890.*

Other record groups having information pertaining to the USCT include Records of the Bureau of Refugees, Freedmen, and Abandoned Lands (RG 105); Records of the Provost Marshal General's Bureau (Civil War) (RG 110); Records of the Accounting Officers of the Department of the Treasury (RG 217); and Records of U.S. Army Continental Commands, 1821–1920 (RG 393).

Holdings of the National Archives relating to the Civil War are outlined in Kenneth W. Munden and Henry Putnam Beers, *Guide to Federal Archives Relating to the Civil War* (Washington, DC: National Archives, 1962) and Henry Putnam Beers, *Guide to the Archives of the Government of the Confederate States of America* (Washington, DC: National Archives, 1968), which were reprinted as *The Union* (1986) and *The Confederacy* (1986).

ROLL LIST

Roll	Description
	2d United States Colored Infantry
1	Abram, Abraham - Bell, Daniel A.
2	Bell, Henry - Brown, Thomas
3	Brown, William - Clark, Moses
4	Clark, Stephen - Downing, Dennis
5	Downs, John - Gavin, Benjamin
6	Gibbs, Paton - Haskins, Iverson
7	Hasler, William - Jenkins, Charles
8	Johnson, Albert - Kratzenberg, Augusta
9	Kratzenberg, Charles - Miller, Thomas
10	Mills, John Q. - Pettis, Alfred
11	Pettis, Frank - Russ, Charles
12	Russell, Charles - Spindle, James E.
13	Sprague, Benedict - Thoroughgood, Miles E.
14	Thornson, Charles H. - West, James
15	West, Nimrod - Woodson, William
16	Woodward, George G. - Young, William A.
	2d United States Colored Infantry Miscellaneous Service Cards
16	Ackis, George - Young, Samuel
	3d United States Colored Infantry
17	Abbot, Charles S. - Bohlen, John
18	Bond, Charles - Clemens, William
19	Clemmons, Joseph - Fernow, Edward B. F.
20	Fields, Alfred - Harmon, William K.
21	Harris, George - Jackson, Frederick
22	Jackson, George - LaCount, Charles J.
23	Ladson, Thomas - Miller, Henry
24	Miller, John - Preslin, Stephen
25	Preston, Joseph - Shorter, Daniel
26	Shorter, John W. - Thompson, George A.
27	Thompson, John - Williams, Edward
28	Williams, Enoch - Young, William H.
	3d United States Colored Infantry Miscellaneous Service Cards
29	Abbott, Chas. - Wright, Lorenzo

NATIONAL ARCHIVES MICROFILM PUBLICATIONS

3d Tennessee Volunteers (African Descent)

30 Ady, George - Young, Samuel

4th United States Colored Infantry

31 Abney, Richard - Bass, James
32 Batsom, David - Brown, Stephen R.
33 Brown Uriah - Cherry, Thomas
34 Chew, Josiah - Davis, Jeremiah
35 Davis, John H. J. - Ellis, John J.
36 Emery, Enoch - Gray, James
37 Grayson, Noble - Hause, William
38 Hawkins, Alexander - Jackson, John
39 Jackson, John Daniel - Jones, John
40 Jones, John Robert - Linthicum, Dennis C.
41 Linthicum, George L. - Mercer, Benjamin F.
42 Mickens, Thomas H. - Novel, Charles
43 Odiorne George G. - Reynolds, S. Walter
44 Rezin, George F. - Seymour, George W.
45 Seymour, Thomas - Stockett, Samuel
46 Stokes, George E. W. - Veal, Charles
47 Viney, Richard - Willett, James
48 Williams, Adam - Zimmons, Charles

4th United States Colored Infantry Miscellaneous Service Cards

49 Adams, James O. - Juricks, Jacob
50 Kane, Chas. - Zook, Gray

5th United States Colored Infantry

51 Adams, John - Black, Edward
52 Blackburn, Daniel - Brown, James
53 Brown, J. R. - Coleman, James
54 Coleman, Thornton - Duckwilder, Clayburn
55 Dudley, George - Gilson, James
56 Glasgow, James - Herse, Jerry
57 Hervit, John - Johnson, Arthur B.
58 Johnson, Charles - Lett, William
59 Levis, Hezekiah - McFarland, Allen
60 McFarland, John - Page, David
61 Page, Isaiah - Rider, William H.
62 Ridgeway, John - Sloan, Samuel
63 Sly, William - Teeters, Charles
64 Teeters, Henry W. - Walker, William
65 Walker, Willis - Winters, James

NATIONAL ARCHIVES MICROFILM PUBLICATIONS

66 Winters, Oscar - Zimmerman, Henry

5th United States Colored Infantry Miscellaneous Service Cards

66 Alexander, Arthur - Kyser, Henry
67 Ladd, Andrew - Young, Thomas

6th United States Colored Infantry

68 Abraham, Jacob - Bolier, Abram
69 Boo, David - Carey, Walter
70 Carr, William - Davis, Peter
71 Davis, Robert - Fiderman, William C.
72 Field, Edward - Gustus, John R.
73 Guy, William - Hopkins, James
74 Hosfield, Lewis M. - Johnson, John Henry
75 Johnson, John W. - Lemon, George
76 Lett, Nelson - Miller, John
77 Miller, Lawson L. - Pierce, Alfred B.
78 Pierce, George - Ruff, Jacob
79 Russell, Lloyd - Smith, William H.
80 Snowden, Henry - Van Clief, Emanuel
81 Van Vrankin, William H. - Wilson, Anthony
82 Wilson, Charles - Young, John

6th United States Colored Infantry Miscellaneous Service Cards

82 Abrams, Jacob - Furgerson, Henry
83 Gadsby, John - Young, Richard

6th Louisiana Infantry (African Descent)

84 Aaron, Koff - Chevarre, Ernest
85 Cheveau, Auguste - Guimiase, Julian
86 Gusman, Thomas - Meyer, Wilson
87 Michael, Louis - Sorza, Antoine
88 Span, Octavus - Zenon, Aristide

7th United States Colored Infantry

89 Abraham, John - Bardy, Joseph
90 Bargus, James J. - Bowyer, Littleton
91 Bowzer, Emory - Bundick, Henry
92 Burden, Daniel - Chase, Henry
93 Chase, Isaac - Crawford, George W.
94 Cray, Charles M. - Drummond, William

NATIONAL ARCHIVES MICROFILM PUBLICATIONS

95 Dumpson, George - Gale, Joseph
96 Gamby, Charles - Griffin, Charles W.
97 Griffin, George E. - Hazelton, William
98 Hearn, William E. - Jackson, George H.
99 Jackson, Henry - Johnson, Samuel
100 Johnson, Stephen - Landsell, William
101 Lane, William - Melvin, Sime
102 Merrill, Lewis - Nichols, Lloyd
103 Noonan, William F. - Purnell, James
104 Purnell, John H. - Russell, Thomas
105 Russum, Alexander - Smith, James R.
106 Smith, James W. - Taylor, Daniel
107 Taylor, Levin H. - Vaughn, John H.
108 Veasey, Edward - Whitman, Moses P.
109 Whittica, James - Wright, John Wesley
110 Wright, Joseph - Young, Thomas

7th United States Colored Infantry Miscellaneous Service Cards

110 Adams, Gilbert - Kutchumber, Jacob
111 Landon, Perry H. - Young, Stephen

7th Louisiana Infantry (African Descent)

112 Able, Alfred - Colar, Manuel
113 Cole, Arnold - Holland, John C.
114 Holland, Jules - Myers, Victor
115 Narcisse, James - Swails, George A.
116 Sylvester, Joseph - Zoodrick, Dick

7th Louisiana Infantry (African Descent) Miscellaneous Service Cards

116 Allen, Charles - Whittey, Hiram C.

NATIONAL ARCHIVES MICROFILM PUBLICATIONS

NARA 1

NATIONAL ARCHIVES MICROFILM PUBLICATIONS

Microfilm Publication M1820

COMPILED MILITARY SERVICE RECORDS OF VOLUNTEER UNION SOLDIERS WHO SERVED WITH THE UNITED STATES COLORED TROOPS: 2d Through 7th United States Colored Infantry, Including 3d Tennessee Volunteers (African Descent), 6th Louisiana Infantry (African Descent), 7th Louisiana Infantry (African Descent)

Roll 23

3d United States Colored Infantry

Ladson, Thomas - Miller, Henry

NATIONAL ARCHIVES AND RECORDS ADMINISTRATION

Adson Thomas

Co. L, 3 U.S. Col'd Inf.

Private | Private

CARD NUMBERS.

1 6251605.	26
2 6262610.	27
3 6262693.	28
4 6262775.	29
5 6262865.	30
6 6262951	31
7 9061479	32
8	33
9	34
10	35
11	36
12	37
13	38
14	39
15	40
16	41
17	42
18	43
19	44
20	45
21	46
22	47
23	48
24	49
25	50

Book Mark:

See also

S. 7709 28 - Harw Ren

NARA 8

L. | 3 | U.S.C.T.

Thomas Ladson

, Co. L, 3 Reg't U. S. Col'd Inf.

Appears on

Company Descriptive Book

of the organization named above.

DESCRIPTION.

Age 24 years; height 5 feet 4 3/4 inches.

Complexion Blk

Eyes Blk; hair Blk

Where born S Carolina

Occupation Labrer

ENLISTMENT.

When Sept. 30, 1864.

Where Portsmouth N. H.

By whom Maj Whittesey, term 3 y'rs.

Remarks: Substitute 1st N. H. Dist.

Daggett

(383g) Copyist.

L | 3 | **U.S.C.T.**

Thomas Ladson

Appears with rank of Pvt on

Muster and Descriptive Roll of a Detachment of Substitutes forwarded

for the 3 Reg't U. S. Col'd Inf. Roll dated Concord N. H., Oct 28, 1864.

Where born S. Carolina

Age 24 y'rs; occupation Laborer

When enlisted Sept 30, 1864.

Where enlisted Portsmouth

For what period enlisted 3 years.

Eyes Black; hair Black

Complexion Black; height 5 ft. 4 3/4 in.

When mustered in Sept 30, 1864.

Where mustered in Portsmouth

Bounty paid $ 100; due $ 100

Where credited

Company to which assigned

Remarks: Substitute for Chas. B. Sanborn of Deabrook N H

Book mark:

Davis

(889) Copyist

NARA 6

L | 3 | U.S.C.T.

Thomas Ladson

Pt, Co. I, 3 Reg't U. S. Col'd Infantry.

Appears on

Company Muster Roll

for Nov. & Dec., 1864.

Present or absent Present

Stoppage, $ 100 for

Due Gov't, $ 100 for

Remarks:

Book mark:

D. A. Moore
(358) Copyist

L | 3 | U.S.C.T.

Thomas Ladson

Pvt, Co. I, 3 Reg't U. S. Col'd Infantry.

Appears on

Company Muster Roll

of

for Jany & Feby, 1865.

Present or absent Present

Stoppage, $ 100 for

Due Gov't, $ 100 for

Remarks:

Book mark:

A. L. Moore

(858) Copyist

L | 3 | U.S.C.T.

Thomas Ladson

Pvt., Co. I, 3 Reg't U. S. Col'd Infantry.

Appears on

Company Muster Roll

for Mar. & Apr., 1865.

Present or absent Present.

Stoppage, $ 100 for

Due Gov't, $ 100 for

Remarks: Stop for 1 Cap Letter & 1 Number.

Book mark:

Geo. White.

(858) Copyist

L. | 3 | U.S.C.T.

Thomas Ladson

Pvt., Co. I, 3 Reg't U. S. Col'd Infantry.

Appears on

Company Muster Roll

for May & June, 1865.

Present or absent Present

Stoppage, $ 100 for

Due Gov't, $ 100 for

Remarks: Stop for 1. Cap Letter & Number.

NEXT ROLL ON FILE MUSTER OUT.

Book mark:

W. H. White

(858) Copyist

NARA 10

L. | 3 | U.S.C.T.

Thomas Ladson

Pvt., Co. I, 3 Reg't U. S. Col'd Infantry.

Appears on **Co. Muster-out Roll**, dated

Jacksonville Fla Oct. 31, 1865.

Muster-out to date Oct. 31, 1865.

Last paid to June 30, 1865.

Clothing account:

Last settled ...., 186 ; drawn since $...... 100

Due soldier $ 11 11/100; due U. S. $........ 100

Am't for cloth'g in kind or money adv'd $...... 100

Due U. S. for arms, equipments, &c., $ 6 100

Bounty paid $........ 100; due $........ 100

Remarks: Joined as Private

Book mark: 2840. P.M.G. Apr. 17. 66.
V. 225. P. 142-76.

W. F. White
Copyist.

(861)

NARA II

704

La Force, Benjamin

Co. D, 3 U.S. Col'd Inf.

Private | Corporal

CARD NUMBERS.

1	6255993	26	
2	6256074	27	
3	6256156	28	
4	6256235	29	
5	6256313	30	
6	6256391	31	
7	6256467	32	
8	6256543	33	
9	6256616	34	
10	6256665	35	
11	6256741	36	
12	6256817	37	
13	6256908	38	
14	6257001	39	
15	9060887	40	
16		41	
17		42	
18		43	
19		44	
20		45	
21		46	
22		47	
23		48	
24		49	
25		50	

Book Mark:

See also

NARA 12

S. 14025-90. Mid. W. Cal.

NARA 13

L. | 3 | U.S.C.T.

Benjamin La Force

, Co. D, 3 Reg't U. S. Col'd Inf.

Appears on

Company Descriptive Book

of the organization named above.

DESCRIPTION.

Age 38 years; height 5 feet 3 inches.

Complexion Black

Eyes Black; hair Black

Where born Clark Ky.

Occupation Farmer

ENLISTMENT.

When July 4th, 1863.

Where Philad. Penn.

By whom ; term y'rs.

Remarks:

B. Springsguth Copyist.

(383g)

L | 3 | U.S.C.T.

Benjamin LaFore

Pvt., Co. D, 3 Reg't U. S. Col'd Infantry.

Age 35 years.

Appears on

Company Muster-in Roll

of the organization named above. Roll dated Philada. Pa. July 26 1863.

Muster-in to date July 4, 1863

Joined for duty and enrolled:

When July 4, 1863.

Where Philadelphia Pa

Period 3 years.

Remarks:

Book mark:

E. A. Rankin

(356) Copyist.

L | 3 | U.S.C.T.

Benjamin La Force

Pvt., Co. D, 3 Reg't U. S. Col'd Infantry.

Appears on

Company Muster Roll

for July 26 to Aug. 31, 1863.

Present or absent Present.

Stoppage, $ 100 for

Due Gov't, $ 100 for

Remarks:

Book mark:

E. A. Rankin

(858) Copyist

L | 3 | U.S.C.T.

Benjamin LaForce

Pvt., Co. D, 3 Reg't U. S. Col'd Infantry.

Appears on

Company Muster Roll

for Sept & Oct, 1863.

Present or absent Present.

Stoppage, $ 100 for

Due Gov't, $ 100 for

Remarks:

Book mark:

E. E. Rankin

(358) Copyist

L | 3 | U.S.C.T.

Benjamin LaFore

Pvt., Co. D, 3 Reg't U. S. Col'd Infantry.

Appears on

Company Muster Roll

for Nov. & Dec., 186 3.

Present or absent Present

Stoppage, $ 100 for

Due Gov't, $ 100 for

Remarks:

Book mark:

A. A. Rankin

(358) Copyist

L | 3 | U.S.C.T.

Benjamin La Force

Pvt., Co. D, 3 Reg't U. S. Col'd Infantry.

Appears on

Company Muster Roll

for Jan. & Feb., 1864.

Present or absent Present.

Stoppage, $ 100 for

Due Gov't, $ 100 for

Remarks:

Book mark:

E. A. Rankin

(358) Copyist

L | 3 | U.S.C.T.

Benjamin Lastforce

Pvt, Co. D, 3 Reg't U. S. Col'd Infantry.

Appears on

Company Muster Roll

for Mch & Apr, 186x.

Present or absent Present

Stoppage, $ 100 for

Due Gov't, $ 100 for

Remarks:

Book mark:

J B Ashby

(858) Copyist

L | 3 | U.S.C.T.

Benjamin Lafore

Pvt, Co. D, 3 Reg't U. S. Col'd Infantry.

Appears on

Company Muster Roll

for May & June, 1864.

Present or absent Present

Stoppage, $ 100 for

Due Gov't, $ 100 for

Remarks:

Book mark:

(358) Copyist

NARA 21

L | 3 | U.S.C.T.

Benjamin La Force

Pvt, Co. D, 3 Reg't U. S. Col'd Infantry.

Appears on

Company Muster Roll

for July & Aug, 1864.

Present or absent Present

Stoppage, $ 100 for

Due Gov't, $ 100 for

Remarks: Detailed as Servant to Capt Brower July 20th 1864

Free on or before April 19/61

Book mark:

J H Chrisley
Copyist

(858)

L | 3 | U.S.C.T.

Benjamin LaForce

Pvt, Co. D, 3 Reg't U. S. Col'd Infantry.

Appears on

Company Muster Roll

for Sept & Oct, 186 4.

Present or absent Present

Stoppage, $ 100 for

Due Gov't, $ 100 for

Remarks: Free on or before April 19/64

Book mark:

(358) Copyist

NARA 23

L | 3 | U.S.C.T.

Benjamin Lactrca

Corp, Co. D, 3 Reg't U. S. Col'd Infantry.

Appears on

Company Muster Roll

for Nov & Dec, 1864.

Present or absent Present

Stoppage, $ 100 for

Due Gov't, $ 100 for

Remarks: Appointed Corp Nov 19th 1864 Sp. O. No. 86

Free on or before April 19/61

Book mark:

J H Schooly

(358) Copyist

NARA 24

L | 3 | U.S.C.T.

Benjamin LaForca

Corp, Co. D, 3 Reg't U. S. Col'd Infantry.

Appears on

Company Muster Roll

for Jan & Feb, 1865.

Present or absent Present

Stoppage, $.....100 for .....

Due Gov't, $.....100 for .....

Remarks: Appointed Corpl
Nov 19/64
Free on or before
April 19/61

Book mark:

J H Dohaily
(358) Copyist

L | 3 | U.S.C.T.

Benjamin La Force

Corpl, Co. D, 3 Reg't U. S. Col'd Infantry.

Appears on

Company Muster Roll

for Mch & Apl, 1865.

Present or absent Present

Stoppage, $ 100 for

Due Gov't, $ 100 for

Remarks: Promoted Corpl Nov. 19. 64. S. O No. 86

Free on or before Apl. 19. 61.

Book mark:

Keyler

Copyist

NARA 26

L	3	U.S.C.T.

Benjamin La Force

Cpl, Co. D, 3 Reg't U. S. Col'd Infantry.

Appears on

Company Muster Roll

for May & June, 1865.

Present or absent Present

Stoppage, $ 100 for

Due Gov't, $ 100 for

Remarks: Promoted Corp. Nov. 19/64 Free on or before Apl. 19-61

NEXT ROLL ON FILE MUSTER OUT.

Book mark:

Kimbler

(858) Copyist

L | 3 | U.S.C.T.

Benjamin La Force

Corp., Co. D, 3 Reg't U. S. Col'd Infantry.

Appears on **Co. Muster-out Roll,** dated Jacksonville, Fla, Oct. 31, 1865.

Muster-out to date Oct. 31, 1865.

Last paid to June 30, 1865.

Clothing account:

Last settled....., 186 ; drawn since $.....100

Due soldier $.....100; due U. S. $ 3 02/100

Am't for cloth'g in kind or money adv'd $.....100

Due U. S. for arms, equipments, &c., $ 6 63/100

Bounty paid $.....100; due $ 100 00/100

Remarks: Stoppage for loss of Garrison Equip. 05 cts. Joined as Private ab. Promtd. Nov. 1864.

Book mark:

Kegler

(361) Copyist.

705

La Force, Fielding

Co A, 3 U.S. Col'd Inf.

Private | Corporal

CARD NUMBERS.

1	62555994	26	
2	62560075	27	
3	62561157	28	
4	62562236	29	
5	62563314	30	
6	62563392	31	
7	62564468	32	
8	62565544	33	
9	62566617	34	
10	62566692	35	
11	62567742	36	
12	62567818	37	
13	62569909	38	
14	62570002	39	
15	9060888	40	
16		41	
17		42	
18		43	
19		44	
20		45	
21		46	
22		47	
23		48	
24		49	
25		50	

Book Mark:

See also

NARA 29

L. | 3 | U.S.C.T.

Fielding La Force

, Co. D, 3 Reg't U. S. Col'd Inf.

Appears on

Company Descriptive Book

of the organization named above.

DESCRIPTION.

Age 19 years; height 5 feet 8 inches.

Complexion Black.

Eyes Black; hair Black.

Where born Mead, Ky.

Occupation Farmer.

ENLISTMENT.

When July 4th, 1863.

Where Philad^a Penn^a

By whom G. W. Wagner; term 3 y'rs.

Remarks:

F. Springguth
Copyist.

(383g)

L | 3 | U.S.C.T.

Fielding La Force

Pvt., Co. D, 3 Reg't U. S. Col'd Infantry.

Age 19 years.

Appears on

Company Muster-in Roll

of the organization named above. Roll dated Philada. Pa, July 26, 1863.

Muster-in to date July 4, 1863

Joined for duty and enrolled:

When July 4, 1863.

Where Philadelphia Pa.

Period 3 years.

Remarks:

Book mark:

E. E. Rankin

(856) Copyist.

L | 3 | U.S.C.T.

Fielding LaForce

Pvt., Co. D, 3 Reg't U. S. Col'd Infantry.

Appears on

Company Muster Roll

for July 26 to Aug. 31, 1863.

Present or absent Present.

Stoppage, $ 100 for

Due Gov't, $ 100 for

Remarks:

Book mark:

E. E. Rankin

(358) Copyist

L | 3 | U.S.C.T.

Fielding La Force

Pvt, Co. D, 3 Reg't U. S. Col'd Infantry.

Appears on

Company Muster Roll

for Sept & Oct, 1863.

Present or absent Present

Stoppage, $ 100 for

Due Gov't, $ 100 for

Remarks: Stop for 1 Cup bugle.

Book mark:

E. E. Rankin

(358) Copyist

L | 3 | U.S.C.T.

Fielding La Force

Pvt., Co. D, 3 Reg't U. S. Col'd Infantry.

Appears on

Company Muster Roll

for Nov. & Dec., 1863.

Present or absent Present.

Stoppage, $ 100 for

Due Gov't, $ 100 for

Remarks:

Book mark:

E. E. Rankin

Copyist

(858)

L | 3 | U.S.C.T.

Fielding LaForce

Pvt., Co. D, 3 Reg't U. S. Col'd Infantry.

Appears on

Company Muster Roll

for Jan. & Feb., 1864.

Present or absent Present

Stoppage, $ 100 for

Due Gov't, $ 100 for

Remarks: Stop for Lost Screw.

Book mark:

E. E. Rankin

(858) Copyist

NARA 35

L | 3 | U.S.C.T.

Fielding La Force

Pvt, Co. D, 3 Reg't U. S. Col'd Infantry.

Appears on

Company Muster Roll

for Mch & April, 1864.

Present or absent Present

Stoppage, $ 100 for

Due Gov't, $ 100 for

Remarks:

Book mark:

J W Schooley

(358) Copyist

L | 3 | U.S.C.T.

Fielding LaForce

Pvt, Co. D, 3 Reg't U. S. Col'd Infantry.

Appears on

Company Muster Roll

for May & June, 186 4.

Present or absent Present

Stoppage, $ 100 for

Due Gov't, $ 100 for

Remarks:

Book mark:

(358) Copyist

NARA 37

L | 3 | U.S.C.T.

Fielding LaForce

Pvt, Co. D, 3 Reg't U. S. Col'd Infantry.

Appears on

Company Muster Roll

for July & Aug, 1864.

Present or absent Present

Stoppage, $ .... 100 for ....

Due Gov't, $ .... 100 for ....

Remarks: Free on or before April 19/61

Book mark: ....

J H Sotherly
Copyist

(358)

NARA 38

L | 3 | U.S.C.T.

Fielding La Force

Pvt, Co. D, 3 Reg't U. S. Col'd Infantry.

Appears on

Company Muster Roll

for Sept & Oct, 1864.

Present or absent Present

Stoppage, $ ___ 100 for ___

Due Gov't, $ ___ 100 for ___

Remarks: Free on or before Apr 19/61

Book mark: ___

J. H. Schindley
(358) Copyist

L | 3 | U.S.C.T.

Fielding Lattree

Pvt, Co. D, 3 Reg't U. S. Col'd Infantry.

Appears on

Company Muster Roll

for Nov & Dec, 1864.

Present or absent Present

Stoppage, $ 100 for

Due Gov't, $ 100 for

Remarks: Free on or before April 19/64

Book mark:

(358) Copyist

NARA 40

L | 3 | U.S.C.T.

Fielding La Force

Corp, Co. D, 3 Reg't U. S. Col'd Infantry.

Appears on

Company Muster Roll

for Jan & Feb, 1865.

Present or absent Present

Stoppage, $ 100 for

Due Gov't, $ 100 for

Remarks: Appointed Corpl Feb 1st/65 S.O. No. 5 Free on or before April 19/61

Book mark:

J H Whitly

(858) Copyist

L | 3 | U.S.C.T.

Fielding La Force

Cpl, Co. D, 3 Reg't U. S. Col'd Infantry.

Appears on

Company Muster Roll

for Mch & Apl, 1865.

Present or absent Present

Stoppage, $ ___ 100 for ___

Due Gov't, $ ___ 100 for ___

Remarks: Promoted Corp Feby 1st 65. S.O. No. 5.
Free on or before Apl 19. 61.

Book mark: ___

Kugler
Copyist

(858)

NARA 42

L | 3 | U.S.C.T.

Fielding La Force

6 Yl., Co. D, 3 Reg't U. S. Col'd Infantry.

Appears on

Company Muster Roll

for May & June, 1865.

Present or absent Present

Stoppage, $.......100 for ....

Due Gov't, $.......100 for.......

Remarks: Promoted Corp.
Feby 1, 65.
Free on or before
Apl. 19. 61.

NEXT ROLL ON FILE MUSTER OUT

Book mark:

Kugler
Copyist

(858)

NARA 43

L | 3 | U.S.C.T.

Fielding La Force

Corp., Co. D, 3 Reg't U. S. Col'd Infantry.

Appears on **Co. Muster-out Roll,** dated

Jacksonville Fla. Oct. 31, 1865.

Muster-out to date Oct. 31, 1865.

Last paid to June 30, 1865.

Clothing account:

Last settled ...., 186 ; drawn since $......$\frac{}{100}$

Due soldier $ 3 $\frac{49}{100}$; due U. S. $......$\frac{}{100}$

Am't for cloth'g in kind or money adv'd $......$\frac{}{100}$

Due U. S. for arms, equipments, &c., $ 6 $\frac{63}{100}$

Bounty paid $......$\frac{}{100}$; due $ 100 $\frac{00}{100}$

Remarks: Stoppage for camp & Garrison Equip $1.65. Joined as private Feby 1st/65.

Book mark:

Kugler
Copyist.

(361)

NARA 44

100

Lamb, Cain D.

Co I, 3 U.S. Col'd Inf.

Private | Private

CARD NUMBERS.

1	6261923	26	
2	6262006	27	
3	6262087	28	
4	6262168	29	
5	6262245	30	
6	6262320	31	
7	6262418	32	
8	6263004	33	
9	9061434	34	
10		35	
11		36	
12		37	
13		38	
14		39	
15		40	
16		41	
17		42	
18		43	
19		44	
20		45	
21		46	
22		47	
23		48	
24		49	
25		50	

Book Mark: EB-Y-11-P571

See also

NARA 45

D, 278201[illegible] [illegible]

L. | 3 | U.S.C.T.

Cain D. Lamb

....., Co. I, 3 Reg't U. S. Col'd Inf.

Appears on

Company Descriptive Book

of the organization named above.

DESCRIPTION.

Age 23 years; height 5 feet 5 inches.

Complexion Yellow

Eyes Dark; hair Black

Where born Jackson Co. Ind.

Occupation Farmer

ENLISTMENT.

When July 21, 1863.

Where Phila. Pa.

By whom Lt Col. Wagner, term 3 y'rs.

Remarks: Lost right arm at Battery Wagner shell from James Island Oct. 3rd 1863 Discharged from Hospital at N. York (See Register discharges) May 16 1864

Daggett

(383o) Copyist.

L | 3 | U.S.C.T.

Cain D. Lamb

Pvt., Co. I, 3 Reg't U. S. Col'd Infantry.

Age X years.

Appears on

Company Muster-in Roll

of the organization named above. Roll dated Philad^a Pa. July 26, 1863.

Muster-in to date July 21, 1863

Joined for duty and enrolled:

When July 21 1863

Where Philadelphia Pa.

Period 3 years.

Remarks: Mustered by Capt. Sergeant U.S.A. July 21, 1863.

+ Roll tom

Book mark:

C. E. McLaughlin

(356) Copyist.

L | 3 | U.S.C.T.

Cain D. Lamb

Priv., Co. I, 3 Reg't U. S. Col'd Infantry.

Appears on

Company Muster Roll

for July 26 to Aug. 31, 1863.

Present or absent Present

Stoppage, $ 100 for

Due Gov't, $ 100 for

Remarks:

Book mark:

C. E. McLaughlin

(255) Copyist

NARA 49

L | 3 | U.S.C.T.

Cain D. Lamb

Priv., Co. I, 3 Reg't U. S. Col'd Infantry.

Appears on

Company Muster Roll

for Sep. & Oct., 1863.

Present or absent Absent

Stoppage, $ 100 for

Due Gov't, $ 100 for

Remarks: In Hospital; Supposed at Hilton Head. Wounded Oct. 3d

Book mark:

L E McLaughlin

(858) Copyist

L | 3 | U.S.C.T.

Cain D. Lamb

Priv., Co. I, 3 Reg't U. S. Col'd Infantry.

Appears on

Company Muster Roll

for Nov. & Dec., 1863.

Present or absent Absent

Stoppage, $ 100 for

Due Gov't, $ 100 for

Remarks: In Hospital at Beaufort S. C. wounded.

Book mark:

C. E. McLaughlin

(858) Copyist

L | 3 | U.S.C.T.

Cain D. Lamb

Priv., Co. I, 3 Reg't U. S. Col'd Infantry.

Appears on

Company Muster Roll

for Jan. & Feb., 1864.

Present or absent Absent

Stoppage, $ 100 for

Due Gov't, $ 100 for

Remarks: Absent wounded; Hospital at Beaufort S. C.

Book mark:

C. E. McLaughlin

(355) Copyist

NARA 52

L | 3 | U.S.C.T.

Sam'l D. Lamb

Pvt, Co. I, 3 Reg't U. S. Col'd Infantry.

Appears on

Company Muster Roll

for Mar & Apl, 1864.

Present or absent Absent

Stoppage, $ 100 for

Due Gov't, $ 100 for

Remarks: Wounded in hospital at New York

Book mark:

A. J. Brown

(858) Copyist

NARA 53

L | 3 | U.S.C.T.

Sam' D. Lamb

Pvt, Co. I, 3 Reg't U. S. Col'd Infantry.

Appears on

Company Muster Roll

for May & June, 1864.

Present or absent

Stoppage, $ 100 for

Due Gov't, $ 100 for

Remarks: Discharged on Surgeon's Certificate of Disability May 6. 1864 at New York

Book mark: Discharged May 10. 64

om

A. J. Moore

(858) Copyist

NARA 54

L. | 3 | U.S.C.T.

Cain D. Lamb

Pt., Co. I, 3 Reg't U. S. Col'd Infantry.

Appears on **Co. Muster-out Roll,** dated

Jacksonville, Fla, Oct. 31, 1865.

Muster-out to date ...., 186 .

Last paid to ...., 186 .

Clothing account:

Last settled ...., 186 ; drawn since $ 100

Due soldier $ .... 100; due U. S. $ 100

Am't for cloth'g in kind or money adv'd $ 100

Due U. S. for arms, equipments, &c., $ 100

Bounty paid $ .... 100; due $ 100

Remarks: Joined as Private Discharged on Surg. Cert. Dis. May 6-1864, at N. Y. City by order of Maj. Genl Dix.
Final Statements given

Book mark: C. D. Discharged May 10 1864. E.B.C.F.11.P.5.71.

N. J. White
Copyist.

(861)

Lamb, Cain D.

Pri, Co. S, 3 Reg U.S.C. Inf.

3 Enclosures.

Bed Cards	Descriptive Lists
Burial Records	Final Statements
Certs. of Dis. for Discharge 1	Furloughs
C. M. Charges	Med. Des. Lists
Med. Certificates	Orders

Other papers relating to—

Admission to Hosp'l	Furlough
Casualty Sheet ~~(Officer's)~~ 2	Med. Examination
Confinement	Misc. Information
Contracts	Pay or Clothing
Death or Effects	Personal Reports
Desertions	Rank
Discharge from Hosp'l	Transfer to Hosp'l
Discharge from Service	Transfer to V. R. C.
Duty	Transportation

2

CASUALTY SHEET

OF WOUNDED.

Cain D. Lamb

Private Company "I"

3" Regiment of W. S. C. T.

Volunteers at the battle of Morris

Island. S. C.

Oct 3" 1863.

NARA 57

CASUALTY SHEET.

Name, Cairn D. Lamb

Rank, Private, Company "I", Regiment, 3rd

Arm, U. S. C. T., State,

Place of casualty, Morris Island. S. C.

Nature of casualty, Wounded Slightly in leg

Date of casualty, Oct 3rd 1863

FROM WHAT SOURCE THIS INFORMATION WAS OBTAINED.

Report of Killed, Wounded, and Missing ~~of the~~ ~~Regiment~~.
Occurring Sept 24 to Oct 7, 1863
~~Brigade~~, ~~Division~~, ~~Corps~~, dated Hd Qrs U S Forces
Morris Islands, S. C. Oct 9th 1863.
(Sgd) Alfred H. Terry
Brig Genl Comdg.

Ind 16 Nov

Thos Brosnick
Clerk

CASUALTY SHEET

No. .....

Cain D. Lamb

— of Company "J"

3rd Regiment of U. S. Col'd

State Volunteers. C D 64

NATURE OF CASUALTY.

ampt.

NARA 59

CASUALTY SHEET.

Name: Leain D. Lamb

Rank: —— *Company:* I *Regiment:* 3rd

Arm: —— *State:* U. S. Col'd

Nature of Casualty: arrived Feb. 18th, at St. Josephs Hospital - Ampt. l. arm -

See Hospital Register New England Soldiers Relief association -

Book 5 Page 177

Cpl. N. Y. S.

R. R. Selden

Clerk.

March 20/86

[OFFICE ENDORSEMENT.]

War Department,

ADJUTANT GENERAL'S OFFICE,

February 24, 1876.

The discharge of Pvt Cain D. Lamb, Co. "I", Third Reg't U.S. Colored Troops, is reported as follows:

On Company Muster Roll.

For May & June, 1864, May 6, 1864

Company Muster-out Roll.

May 6th, 1864

Company Descriptive Book.

......, 186

Company Morning Reports.

......, 186

Soldier's Final Statement.

......, 186

Soldier's Record of Death and Interment.

......, 186

Soldier's Inventory of Effects.

......, 186

Soldier's Certificate of Disability for Discharge.

May 10", 1864

Soldier's Individual Muster-out Roll.

......, 186

Regimental Return.

For June, 1864, June 11, 1864

Regimental Quarterly Returns.

......, 186

Regimental Descriptive Book.

......, 186

By Surgeon General.

(......) ......, 186

May 10, 1864, is held to be the correct date, and the Company ~~Muster~~ Rolls will be amended accordingly.

Thomas M. Vincent

Assistant Adjutant General.

E.B. "See letter to 2d Auditor

Noted Hill. 571 of March 10. 1876.

June 22

Duplicate sent the Pension Office.

G. S. A. of Dis. 15
1814

CERTIFICATE OF DISABILITY FOR DISCHARGE

IN THE CASE OF

Cain D. Lamb

a Priv. Co. I reg. 3d Col'd Reg't of U.S. Troops

APPROVED

C. McDougall

Surgeon, U. S. A.,

Medical Director Dep't of the East.

Hd. Qrs. Dept of the East
New York May 6 1864
To be discharged

By Command of
Maj. Genl Dix
Wilson Barstow
Capt & A.D.C.

Received (A. G. Office) Capt & A.D.C., 186.

naaly

En on O.R. of Cas

ARMY OF THE UNITED STATES.

CERTIFICATE

OF DISABILITY FOR DISCHARGE.

Pvt. Cain D. Lamb, of Captain Chas. F. Smith's Company, (I) of the (3rd) third Regiment of United States Colored Troops was enlisted by Lt. Col. Wagner ——— of the ——— Regiment of ——— at Philadelphia, Pa. on the 21st day of July, 1863, to serve 3 years; he was born in Jackson Co in the State of Indiana, is 23 years of age, 5 feet 5 inches high, Light complexion, dark eyes black hair, and by occupation when enlisted a Farmer. During the last two months said soldier has been unfit for duty 60 days.* Wounded in action at Fort Wagner Oct. 3rd 1863

STATION: U.S.A. Genl. Hosp. Centl. Park, N.Y.
DATE: May 3rd 1864

B. A. Clements.
Surgeon U.S.Army
Commanding ~~Company.~~ Hosp.

I CERTIFY, that I have carefully examined the said Pvt. Cain D. Lamb of Captain C. F. Smith's Company, and find him incapable of performing the duties of a soldier because of† amputation of right arm, the result of a gun shot wound received while on duty at Morris Island S.C. October 3rd 1863. Discharged at his own request. Degree of disability Total

B. A. Clements.
Surgeon. U.S.A. In Chge.

DISCHARGED, this 10th day of May, 1864, at New York City

B. A. Clements
Surgeon U.S.Army
Commanding the ~~Regt.~~ Hosp.

The *Soldier* desires to be *addressed* at
Town Evansville *County* Jackson *State* Inda.

* See Note 1 on the back of this. † See Note 2 on the back of this.

[A. G. O. No. 100 & 101—First.] [DUPLICATES.]

707

Lamb, Solomon

Co I, 3 U.S. Col'd Inf.

Private | Private

CARD NUMBERS.

1	6261924	26	
2	6262007	27	
3	6262088	28	
4	6262167	29	
5	6262244	30	
6	6262319	31	
7	6262395	32	
8	6262469	33	
9	6262538	34	
10	6262614	35	
11	6262697	36	
12	6262779	37	
13	6262869	38	
14	6262955	39	
15	9061435	40	
16		41	
17		42	
18		43	
19		44	
20		45	
21		46	
22		47	
23		48	
24		49	
25		50	

Book Mark:

See also

No. 1995792 Porion.

NARA 64

L. | 3 | U.S.C.T.

Solomon Lamb

, Co. I, 3 Reg't U. S. Col'd Inf.

Appears on

Company Descriptive Book

of the organization named above.

DESCRIPTION.

Age 21 years; height 5 feet 4 inches.

Complexion lt yellow

Eyes Dark; hair Black

Where born Jackson Co. Indiana

Occupation Farmer

ENLISTMENT.

When July 21, 1863.

Where Phila. Pa.

By whom Lt Col. Wagner; term 3 y'rs.

Remarks:

Dazzett

(383a) Copyist.

L | 3 | U.S.C.T.

Solomon Lamb

Priv., Co. L, 3 Reg't U. S. Col'd Infantry.

Age 21 years.

Appears on

Company Muster-in Roll

of the organization named above. Roll dated Philada Pa. July 26, 1863

Muster-in to date July 21, 1863

Joined for duty and enrolled:

When July 21 1863.

Where Philadelphia Pa.

Period 3 years.

Remarks: Mustered by Capt. Sergeant, U. S. A. July 21, 1863.

Book mark:

C. E. McLaughlin

(356) Copyist.

L | 3 | U.S.C.T.

Solomon Lamb

Priv., Co. I, 3 Reg't U. S. Col'd Infantry.

Appears on

Company Muster Roll

for July 26 to Aug. 31, 1863.

Present or absent Present

Stoppage, $ 100 for

Due Gov't, $ 100 for

Remarks:

Book mark:

C. E. McLaughlin

(858) Copyist

L | 3 | U.S.C.T.

Solomon Lamb

Priv., Co. I, 3 Reg't U. S. Col'd Infantry.

Appears on

Company Muster Roll

for Sep. + Oct., 1863.

Present or absent Present

Stoppage, $ 100 for

Due Gov't, $ 100 for

Remarks:

Book mark:

C. E. McLaughlin

Copyist

(258)

L | 3 | U.S.C.T.

Solomon Lamb

Priv., Co. I, 3 Reg't U. S. Col'd Infantry.

Appears on

Company Muster Roll

for Nov. & Dec., 1863.

Present or absent Present

Stoppage, $ 100 for

Due Gov't, $ 100 for

Remarks:

Book mark:

C. E. McLaughlin

(858) Copyist

L | 3 | U.S.C.T.

Solomon Lamb

Priv., Co. I, 3 Reg't U. S. Col'd Infantry.

Appears on

Company Muster Roll

for Jan. & Feb., 1864.

Present or absent Present

Stoppage, $ 100 for

Due Gov't, $ 100 for

Remarks:

Book mark:

C. E. McLaughlin

(858) Copyist

G | 3 | U.S.C.T.

Solomon Lamb

Pvt, Co. I, 3 Reg't U. S. Col'd Infantry.

Appears on

Company Muster Roll

for Nov & Apl, 1864.

Present or absent Present

Stoppage, $ 100 for

Due Gov't, $ 100 for

Remarks:

Book mark:

(858) Copyist

G | 3 | U.S.C.T.

Solomon Lamb

Pvt., Co. I, 3 Reg't U. S. Col'd Infantry.

Appears on

Company Muster Roll

for May & June, 1864.

Present or absent Present

Stoppage, $ 100 for

Due Gov't, $ 100 for

Remarks:

Book mark:

(858) Copyist

NARA 72

L | 3 | U.S.C.T.

Solomon Lamb

Pt, Co. I, 3 Reg't U. S. Col'd Infantry.

Appears on

Company Muster Roll

for July & Aug, 1864.

Present or absent Present

Stoppage, $ 100 for

Due Gov't, $ 100 for

Remarks: Free on or before Apl. 19. 61. Stop for 1 Cap letter 01 ch

Book mark:

C J Moore

(358) Copyist

NARA 73

S | 3 | U.S.C.T.

Solomon Lamb

Pt, Co. I, 3 Reg't U. S. Col'd Infantry.

Appears on

Company Muster Roll

for Sept. & Oct., 1864.

Present or absent Present

Stoppage, $ 100 for

Due Gov't, $ 100 for

Remarks: Paid $7.00 per month from enlistment to the 30" Apl. 1864 Back pay due

Book mark:

D J Moore

(858) Copyist

NARA 74

S | 3 | U.S.C.T.

Solomon Lamb

Pvt, Co. I, 3 Reg't U. S. Col'd Infantry.

Appears on

Company Muster Roll

for Nov. & Dec., 1864.

Present or absent Present

Stoppage, $ 100 for

Due Gov't, $ 100 for

Remarks:

Book mark:

C J Moore

(358) Copyist

NARA 75

S | 3 | U.S.C.T.

Solomon Lamb

Pvt, Co. I, 3 Reg't U. S. Col'd Infantry.

Appears on

Company Muster Roll

for Jany & Feby, 1865.

Present or absent Present

Stoppage, $ ___ 100 for ___

Due Gov't, $ ___ 100 for ___

Remarks:

Book mark:

O J Moore
Copyist

(858)

L. | 3 | U.S.C.T.

Solomon Lamb,

Pvt., Co. I, 3 Reg't U. S. Col'd Infantry.

Appears on

Company Muster Roll

for Mar. & Apr., 1865.

Present or absent Present

Stoppage, $ 100 for

Due Gov't, $ 100 for

Remarks: Stop for 1 Musquito Bar.

Book mark:

Dr. G. White.

(358) Copyist

L. | 3 | U.S.C.T.

Solomon Lamb

Pvt., Co. I, 3 Reg't U. S. Col'd Infantry.

Appears on

Company Muster Roll

for May & June, 1865.

Present or absent Present.

Stoppage, $ 100 for

Due Gov't, $ 100 for

Remarks: Stop for 1. Musquito Bar.

NEXT ROLL ON FILE MUSTER OUT.

Book mark:

N. G. White

(358) Copyist

L. | 3 | U.S.C.T.

Solomon Lamb

Pvt., Co. I, 3 Reg't U. S. Col'd Infantry.

Appears on **Co. Muster-out Roll,** dated Jacksonville, Fla. Oct. 31, 1865.

Muster-out to date Oct. 31, 1865.

Last paid to June 30, 1865.

Clothing account:

Last settled....., 186 ; drawn since $.....100

Due soldier $.....9 95/100; due U. S. $.....100

Am't for cloth'g in kind or money adv'd $.....100

Due U. S. for arms, equipments, &c., $.....100

Bounty paid $.....100; due $.....100 100

Remarks: Joined as Private

Book mark:

N. B. White

(361) *Copyist.*

708

Landel, James

Co C, 3 U.S. Col'd Inf.

Private Private

CARD NUMBERS.

1	6254772	26	
2	6254847	27	
3	6254935	28	
4	6255011	29	
5	6255087	30	
6	6255157	31	
7	6255229	32	
8	6255299	33	
9	6255367	34	
10	6255440	35	
11	6255515	36	
12	6255599	37	
13	6255691	38	
14	6255785	39	
15	6255872	40	
16	906077	41	
17		42	
18		43	
19		44	
20		45	
21		46	
22		47	
23		48	
24		49	
25		50	

Book Mark:

See also

L | 3 | U.S.C.T.

James Lansdale

, Co. L, 3 Reg't U. S. Col'd Inf.

Appears on

Company Descriptive Book

of the organization named above.

DESCRIPTION.

Age 25 years; height 5 feet 9 inches.

Complexion Black

Eyes Black; hair Black

Where born Chester Co Penna

Occupation Farmer

ENLISTMENT.

When July 3, 1863

Where Phila.

By whom Lt. Col. Wagner, term 3 y'rs.

Remarks:

Lewis

(383g) Copyist.

L | 3 | U.S.C.T.

James Lansdale

Pvt., Co. C, 3 Reg't U. S. Col'd Infantry.

Appears on

Company Muster Roll

for July 3 to Aug 31, 1863.

Joined for duty and enrolled:

When July 3, 1863.*

Where Philad Pa.*

Period 3 years.*

Present or absent Present

Stoppage, $ 100 for

Due Gov't, $ 100 for

Remarks:

* See enrollment on card from muster-in roll.

Book mark:

C. S. McLaughlin

(358c) Copyist.

L | 3 | U.S.C.T.

James Lumsdale

Pvt., Co. C, 3 Reg't U. S. Col'd Infantry.

Appears on

Company Muster Roll

for Sept & Oct, 1863.

Joined for duty and enrolled:

When July 3, 1863.*

Where Philad. Pa.*

Period 3 years.*

Present or absent

Stoppage, $ 100 for

Due Gov't, $ 100 for

Remarks: Sick in Hospital at Beaufort - S.C. Since Oct. 22. 63. Sur. Certif.

* ☞ See enrollment on card from muster-in roll.

Book mark:

A. McLaughlin.

(358c) Copyist.

L | 3 | U.S.C.T.

James Lumsdale

Pvt., Co. C, 3 Reg't U. S. Col'd Infantry.

Appears on

Company Muster Roll

for Nov. & Dec, 1863.

Joined for duty and enrolled:

When July 3, 1863.*

Where Phila Pa *

Period 3 years.*

Present or absent Present

Stoppage, $ 100 for

Due Gov't, $ 100 for

Remarks:

* ☞ See enrollment on card from muster-in roll.

Book mark:

C. D. McLaughlin

(358c) Copyist.

L | 3 | U.S.C.T.

James Lansdale

Pvt., Co. C, 3 Reg't U. S. Col'd Infantry.

Appears on

Company Muster Roll

for Jan & Feb, 1864.

Joined for duty and enrolled:

When July 3, 1863.*

Where Philad Pa *

Period 3 years.*

Present or absent Present

Stoppage, $ 100 for

Due Gov't, $ 100 for

Remarks:

* ☞ See enrollment on card from muster-in roll.

Book mark:

O. L. McLaughlin

(358c) Copyist.

NARA 85

L | 3 | U.S.C.T.

James Lunsdale

Pvt, Co. C, 3 Reg't U. S. Col'd Infantry.

Appears on

Company Muster Roll

for Mar & Apr, 1864.

Joined for duty and enrolled:

When July 31, 1863.*

Where Phila Pa. *

Period 3 years.*

Present or absent Present

Stoppage, $ 100 for

Due Gov't, $ 100 for

Remarks:

* See enrollment on card from muster-in roll.

Book mark:

C S McLaughlin

Copyist.

(358c)

L. | 3 | U.S.C.T.

James Lansdale,
Pvt., Co. C, 3 Reg't U. S. Col'd Infantry.

Appears on

Company Muster Roll

for May and June, 1864

Joined for duty and enrolled:

When July 3d, 1863.*

Where Philadelphia, Pa.*

Period 3 years.*

Present or absent Present.

Stoppage, $.....100 for .....

Due Gov't, $.....100 for .....

Remarks:

* ☞ See enrollment on card from muster-in roll.

Book mark:

Sharin.

(358c) *Copyist.*

L. | 3 | U.S.C.T.

James Lansdale,
Pvt., Co. C, 3 Reg't U. S. Col'd Infantry.

Appears on

Company Muster Roll

for July and August, 1864

Joined for duty and enrolled:

When July 3d, 1863.*

Where Philadelphia, Pa.*

Period 3 years.*

Present or absent Present

Stoppage, $ 100 for

Due Gov't, $ 100 for

Remarks: Present on or before April 19th, 1864.

* ☞ See enrollment on card from muster-in roll.

Book mark:

Sharin

(358c) *Copyist.*

L. | 3 | U.S.C.T.

James Lansdale

Pvt., Co. C, 3 Reg't U. S. Col'd Infantry.

Appears on

Company Muster Roll

for Sept. & Oct., 1864

Joined for duty and enrolled:

When July 3d., 1863.*

Where Philadelphia, Pa.,*

Period 3 years.*

Present or absent Present.

Stoppage, $..... 100 for .....

Due Gov't, $..... 100 for .....

Remarks: Free on or before April 19th. 1861. Paid seven dollars, per month to April 30th. 1864, Back pay due.

* ☞ See enrollment on card from muster-in roll.

Book mark: .....

Tharin.

(358c) *Copyist.*

L. | 3 | U.S.C.T.

James Lansdale,
Pvt., Co. C, 3 Reg't U. S. Col'd Infantry.

Appears on

Company Muster Roll

for Nov. & Dec., 1864.

Joined for duty and enrolled:

When July 3d., 1863.*

Where Philadelphia, Pa.*

Period 3 years.*

Present or absent Present.

Stoppage, $.....100 for .....

Due Gov't, $.....100 for .....

Remarks: Paid but $7.00 per month to April 30th. 1864, Back pay due.
Free.

* ☞ See enrollment on card from muster-in roll.

Book mark:

Sharon

(358c) *Copyist.*

L. | 3 | U.S.C.T.

James Lansdale,
Pvt., Co. C, 3 Reg't U. S. Col'd Infantry.

Appears on

Company Muster Roll

for Jan. and Feb., 1865.

Joined for duty and enrolled:

When July 3d., 1863.*

Where Philadelphia, Pa.*

Period 3 years.*

Present or absent Present

Stoppage, $ 100 for

Due Gov't, $ 100 for

Remarks: Free.

* ☞ See enrollment on card from muster-in roll.

Book mark:

Sharin

(358c) *Copyist.*

L. | 3 | U.S.C.T.

James Lansdale

Pvt, Co. C, 3 Reg't U. S. Col'd Infantry.

Appears on

Company Muster Roll

for Mch & Apl, 1865.

Joined for duty and enrolled:

When 3 July, 1863.*

Where Phila Pa.*

Period 3 years.*

Present or absent present

Stoppage, $1 78/100 for ordnance.

Due Gov't, $ 100 for

Remarks: Free

* See enrollment on card from muster-in roll.

Book mark:

G. E. Dayton

(358c) Copyist.

L. | 3 | U.S.C.T.

James Lansdale

Pvt, Co. C, 3 Reg't U. S. Col'd Infantry.

Appears on

Company Muster Roll

for May + June, 1865.

Joined for duty and enrolled:

When 3 July, 1863.*

Where Phila, Pa. *

Period 3 years.*

Present or absent present.

Stoppage, $ 1 78/100 for ordnance

Due Gov't, $ 100 for

Remarks: Free

* ☞ See enrollment on card from muster-in roll.

Book mark:

G. E. Dayton

(358c) Copyist.

L. | 3 | U.S.C.T.

James Lansdale

Pvt, Co. C, 3 Reg't U. S. Col'd Infantry.

Appears on

Company Muster Roll

for July + Aug, 1865.

Joined for duty and enrolled:

When 3 July, 1863.*

Where Phila Pa.*

Period 3 years.*

Present or absent present.

Stoppage, $ 45/100 for ordnance

Due Gov't, $ 100 for

Remarks:

* ☞ See enrollment on card from muster-in roll.

Book mark:

G. E. Dayton

(358c) *Copyist.*

L, | 3 | U.S.C.T.

James Landel

Pvt, Co. C, 3 Reg't U. S. Col'd Infantry.

Appears on **Co. Muster-out Roll,** dated Jacksonville Fla, 31 Oct, 1865.

Muster-out to date 31 Oct, 1865.

Last paid to 30 June, 1865.

Clothing account:

Last settled....., 186 ; drawn since $..... 100

Due soldier $ 10 11/100; due U. S. $..... 100

Am't for cloth'g in kind or money adv'd $..... 100

Due Uf for 6 mo. Eq 6 00

Due U. S. for arms, equipments, &c., $..... 100

Bounty paid $..... 100; due $ 100 00/100

Remarks: Private from Enlistment.

Book mark: 1116-79-281638

G. E. Dayton

(361) *Copyist.*

L | 3 | U.S.C.T.

James Landel

Pvt., Co. b, 3 Reg't U. S. Col'd Infantry

Age 27 years.

Appears on

Company Muster-in Roll

of the organization named above. Roll dated Phila Pa July 26, 1863.

Muster-in to date July 3, 1863.

Joined for duty and enrolled:

When July 3, 1863.*

Where Phila Pa. *

Period 3 years.*

Remarks:

*☞ Muster-in roll shows enrollment of all men of this company as of same date and place. See enrollment on subsequent card or cards.

Book mark:

C. S. McLaughlin

(356c) Copyist.

709

Landon, William D. A.

Co K, 3 U.S. Col'd Inf.

2 Lieutenant	2 Lieutenant

CARD NUMBERS.

1 6251390	26
2 6264064	27
3 L-214-07-1865	28
4	29
5	30
6	31
7	32
8	33
9	34
10	35
11	36
12	37
13	38
14	39
15	40
16	41
17	42
18	43
19	44
20	45
21	46
22	47
23	48
24	49
25	50

Book Mark: L-214-07-1865

See also G 14 Indiana; E 1 U S Vet Vol Inf, Reg Army

L | 3 | U.S.C.T.

William D. F. Landon

2d Lt., Co. K, 3 Reg't U. S. Col'd Infantry.

Age 33 years.

Appears on an

Individual Muster-in Roll

of the organization named above. Roll dated Jacksonville, Florida, Oct. 22, 1865.

Muster-in to date Oct 22, 1865.

Joined for duty and enrolled:

When Oct 22, 1865.

Where Jacksonville, Fla.

Period 3 years.

Remarks: Appointed from Civil life. vice C. L. Randall, promoted

Book mark: L-214-CT-1865

Leary

(336) *Copyist.*

L | 3 | U.S.C.T.

William D. F. Landon

2d Lieut, Co. K, 3 Reg't U. S. Col'd Infantry.

Appears on **Co. Muster-out Roll,** dated Jacksonville, Fla, Oct. 31, 1865.

Muster-out to date Oct. 31, 1865.

Last paid to Pay due from enrollment, 186 .

Clothing account:

Last settled....., 186 ; drawn since $.....100

Due soldier $.....100; due U. S. $.....100

Am't for cloth'g in kind or money adv'd $.....100

Due U. S. for arms, equipments, &c., $.....100

Bounty paid $.....100; due $.....100

Remarks:.....

Book mark:.....

E. N. Hunter

(361) *Copyist.*

NARA 99

L | 3 USCT.

Wm D. F. Landon

, Co. , 3 Reg't U.S.C.T.

NOTATION,

L-308. 1865 with

Book mark: L-214-C.T. 1865

War Department,

Adjutant General's Office,

Washington Nov 8, 1865.

Call from

returned with report.

The above book mark was noted on rolls in order to preserve results of search in this case.

C. C. Casey
Copyist.

(475)

710

Lane James

Co C, 3 U.S. Col'd Inf.

Private | Private

CARD NUMBERS.

1	6254771	26	
2	6254846	27	
3	6254934	28	
4	6255010	29	
5	6255086	30	
6	6255156	31	
7	6255228	32	
8	6255298	33	
9	6255366	34	
10	6255439	35	
11	6255514	36	
12	6255598	37	
13	6255692	38	
14	6255786	39	
15	6255873	40	
16	9060773	41	
17		42	
18		43	
19		44	
20		45	
21		46	
22		47	
23		48	
24		49	
25		50	

Book Mark:

See also

L | 3 | U.S.C.T.

James Lane

, Co. G, 3 Reg't U. S. Col'd Inf.

Appears on

Company Descriptive Book

of the organization named above.

DESCRIPTION.

Age 25 years; height 5 feet 8 inches.

Complexion Yellow

Eyes Black, hair Black

Where born Lancaster Co. Penna

Occupation Farmer

ENLISTMENT.

When Jany 3, 1863

Where Ohio

By whom Lt. Col. Wagner, term 3 y'rs.

Remarks:

Hewson

(383g) Copyist.

L | 3 | U.S.C.T.

James Lane

Pvt., Co. L, 3 Reg't U. S. Col'd Infantry.

Age 25 years.

Appears on

Company Muster-in Roll

of the organization named above. Roll dated Phila Pa, July 26, 1863.

Muster-in to date July 3, 1863.

Joined for duty and enrolled:

When July 3, 1863.*

Where Phila Pa *

Period 3 years.*

Remarks:

*☞ Muster-in roll shows enrollment of all men of this company as of same date and place. See enrollment on subsequent card or cards.

Book mark:

C. L. McLaughlin
Copyist.

(356c)

L | 3 | U.S.C.T.

James Lane

Pvt., Co. C, 3 Reg't U. S. Col'd Infantry.

Appears on

Company Muster Roll

for July 3. to Aug 31, 1863.

Joined for duty and enrolled:

When July 3, 1863.*

Where Phila. Pa.*

Period 3 years.*

Present or absent Present

Stoppage, $ 100 for

Due Gov't, $ 100 for

Remarks:

* ☞ See enrollment on card from muster-in roll.

Book mark:

C. M. Laughlin

(358c) Copyist.

L | 3 | U.S.C.T.

James Lane

Pvt., Co. C, 3 Reg't U. S. Col'd Infantry.

Appears on

Company Muster Roll

for Sept & Oct, 1863.

Joined for duty and enrolled:

When July 31, 1863.*

Where Phila Pa.*

Period 3 years.*

Present or absent Present

Stoppage, $ 100 for

Due Gov't, $ 100 for

Remarks:

* ☞ See enrollment on card from muster-in roll.

Book mark:

C. S. McLaughlin
Copyist.

(358c)

L | 3 | U.S.C.T.

James Lane

Pvt., Co. C, 3 Reg't U. S. Col'd Infantry.

Appears on

Company Muster Roll

for Nov. & Dec, 1863.

Joined for duty and enrolled:

When July 3, 1863.*

Where Phila. Pa.*

Period 3 years.*

Present or absent Present

Stoppage, $ 100 for

Due Gov't, $ 100 for

Remarks:

* ☞ See enrollment on card from muster-in roll.

Book mark:

C. L. McLaughlin

(358c) Copyist.

L | 3 | U.S.C.T.

James Lane

Pvt., Co. C, 3 Reg't U. S. Col'd Infantry.

Appears on

Company Muster Roll

for Jan & Feb, 1864.

Joined for duty and enrolled:

When July 3*, 1863.*

Where Phila Pa *

Period 3 years.*

Present or absent Present

Stoppage, $ 100 for

Due Gov't, $ 100 for

Remarks:

* See enrollment on card from muster-in roll.

Book mark:

C. S. McLaughlin

(358c) Copyist.

L | 3 | U.S.C.T.

James Lane

Pvt., Co. C, 3 Reg't U. S. Col'd Infantry.

Appears on

Company Muster Roll

for Mar & Apr, 1864.

Joined for duty and enrolled:

When July 3, 1863.*

Where Phila Pa *

Period 3 years.*

Present or absent Present

Stoppage, $ 100 for

Due Gov't, $ 100 for

Remarks:

* ☞ See enrollment on card from muster-in roll.

Book mark:

C P McLaughlin

(358c) *Copyist.*

L. | 3 | U.S.C.T.

James Lane,

Pvt., Co. C, 3 Reg't U. S. Col'd Infantry.

Appears on

Company Muster Roll

for May and June, 1864

Joined for duty and enrolled:

When July 3 d, 1863.*

Where Philadelphia Pa.*

Period 3 years.*

Present or absent Present.

Stoppage, $ 100 for

Due Gov't, $ 100 for

Remarks:

* ☞ See enrollment on card from muster-in roll.

Book mark:

Sharin

(358c) *Copyist.*

L. | 3 | U.S.C.T.

James Lane,

Pvt., ~~Co.~~ C, 3 Reg't U. S. Col'd Infantry.

Appears on

Company Muster Roll

for July and August, 1864.

Joined for duty and enrolled:

When July 3d., 1863.*

Where Phila. Pa.*

Period 3 years.*

Present or absent Present

Stoppage, $ 100 for

Due Gov't, $ 100 for

Remarks: Freeman on or before April 19th, 1861.

* ☞ See enrollment on card from muster-in roll.

Book mark:

Sharin

(358c) *Copyist.*

C. | 3 | U.S.C.T.

James Lane,

Pvt., Co. C, 3 Reg't U. S. Col'd Infantry.

Appears on

Company Muster Roll

for Sept. & Oct., 1864

Joined for duty and enrolled:

When July 3d., 1863.*

Where Philadelphia, Pa.*

Period 3 years.*

Present or absent Present.

Stoppage, $.....100 for .....

Due Gov't, $.....100 for .....

Remarks: Free on or before April 19th. 1861. Paid seven dollars per month To April 30th. 1864, Backpay due.

* ☞ See enrollment on card from muster-in roll.

Book mark: .....

Sharin.

(358c) *Copyist.*

L. | 3 | U.S.C.T.

James Lane,

Pvt., Co. C, 3 Reg't U. S. Col'd Infantry.

Appears on

Company Muster Roll

for Nov. & Dec., 1864.

Joined for duty and enrolled:

When July 3d, 1863.*

Where Philadelphia, Pa.*

Period 3 years.*

Present or absent. Present.

Stoppage, $.....100 for .....

Due Gov't, $.....100 for .....

Remarks: Paid but $7.00 per month to April 30th. 1864, Back pay due.

Free.

* See enrollment on card from muster-in roll.

Book mark:

Sharin

(358c) *Copyist.*

L. | 3 | U.S.C.T.

James Lane,
Pvt., Co. C, 3 Reg't U. S. Col'd Infantry.

Appears on

Company Muster Roll

for Jan. and Feb., 1865.

Joined for duty and enrolled:

When July 3d., 1863*

Where Philadelphia, Pa.*

Period 3 years.*

Present or absent Present

Stoppage, $ 100 for

Due Gov't, $ 100 for

Remarks: Free.

* ☞ See enrollment on card from muster-in roll.

Book mark:

Sharin.

(358c) *Copyist.*

L. | 3 | U.S.C.T.

James Lane

Pvt, Co. C, 3 Reg't U. S. Col'd Infantry.

Appears on

Company Muster Roll

for Mch & Apl, 1865.

Joined for duty and enrolled:

When 3 July, 1863.*

Where Phila, Pa.*

Period 3 years.*

Present or absent present

Stoppage, $ 98/100 for ordnance.

Due Gov't, $ 100 for

Remarks: Free

* ☞ See enrollment on card from muster-in roll.

Book mark:

G. E. Dayton

(358c) Copyist.

L, | 3 | U.S.C.T.

James Lane

Pvt, Co. C, 3 Reg't U. S. Col'd Infantry.

Appears on

Company Muster Roll

for May & June, 1865.

Joined for duty and enrolled:

When 3 July, 1863.*

Where Philad Pa.*

Period 3 years.*

Present or absent present.

Stoppage, $ 98/100 for ordnance.

Due Gov't, $ 100 for

Remarks: Free

* ☞ See enrollment on card from muster-in roll.

Book mark:

E. E. Dayton

(358c) Copyist.

L. | 3 | U.S.C.T.

James Lane

Pvt, Co. C, 3 Reg't U. S. Col'd Infantry.

Appears on

Company Muster Roll

for July & Aug, 1865.

Joined for duty and enrolled:

When 3 July, 1863.*

Where Phila Pa.*

Period 3 years.*

Present or absent present.

Stoppage, $ 07/100 for ordnance

Due Gov't, $ 95/100 for C. & G. Eq

Remarks:

* ☞ See enrollment on card from muster-in roll.

Book mark:

G. E. Dayton

Copyist.

(358c)

L. | 3 | U.S.C.T.

James Lane

Pvt, Co. C, 3 Reg't U. S. Col'd Infantry.

Appears on **Co. Muster-out Roll,** dated Jacksonville, Fla. 31 Oct, 1865.

Muster-out to date 31 Oct, 1865.

Last paid to 30 June, 1865.

Clothing account:

Last settled ....., 186 ; drawn since $ 100

Due soldier $ ..... 100 ; due U. S. $ 5 86 100

Am't for cloth'g in kind or money adv'd $ 100

Due U. S. for arms, equipments, &c., $ 6 00 100

Bounty paid $ ..... 100 ; due $ 100 00 100

Remarks: Private from Enlistment

Book mark: 255,242

G. E. Dayton

Copyist.

(861)

711

Larkins James

Co A, 3 U.S. Col'd Inf.

Private

CARD NUMBERS.

1	6258446.	26	
2	6258554.	27	
3	6258610.	28	
4	6258687.	29	
5	6258765.	30	
6	6258838.	31	
7	6258916.	32	
8	6258990.	33	
9	6259062.	34	
10	6259136.	35	
11	6259212.	36	
12	6259296.	37	
13	6259388.	38	
14	6252053.	39	
15	6259505.	40	
16	906[illegible]6	41	
17		42	
18		43	
19		44	
20		45	
21		46	
22		47	
23		48	
24		49	
25		50	

Book Mark:

See also

L. | 3. | **U.S.C.T.**

James Larkins.

, Co. F, 3 Reg't U. S. Col'd Inft.

Appears on

Company Descriptive Book

of the organization named above.

DESCRIPTION.

Age 40 years; height 5 feet 8 inches.

Complexion Brown

Eyes Black; hair Black.

Where born Wilmington, Del.

Occupation Farmer

ENLISTMENT.

When July 9, 1863.

Where Philad. Penn.

By whom Capt. Wagner, term 3 y'rs.

Remarks: Mustered in by Capt. Sergeant U.S.A. July 9. 1863.

(383g) Copyist.

L | 3 | U.S.C.T.

James Larkins

Pvt., Co. F, 3 Reg't U. S. Col'd Infantry.

Age 40 years.

Appears on

Company Muster-in Roll

of the organization named above. Roll dated Philadelphia, Pa., Aug. 10, 1863.

Muster-in to date July 11, 1863

Joined for duty and enrolled:

When July 9, 1863.

Where Philadelphia, Pa.

Period 3 years.

Remarks:

Book mark:

Beck

Copyist.

(356)

L | 3 | U.S.C.T.

James Larkins

Pri., Co. F, 3 Reg't U. S. Col'd Infantry.

Appears on

Company Muster Roll

for Aug 10 to 31, 1863.

Present or absent

Stoppage, $ 100 for

Due Gov't, $ 100 for

Remarks:

Deserted from Camp Wm Penn, Pa, Aug 8 63.

Book mark:

J Beck

Copyist

(858)

L | 3 | U.S.C.T.

James Larkin

Priv, Co. F, 3 Reg't U. S. Col'd Infantry.

Appears on

Company Muster Roll

for Sept. & Oct., 1863.

Present or absent Present

Stoppage, $ 100 for

Due Gov't, $ 100 for

Remarks: Stop $10, for apprehension and return from desertion by order of Lt. Col. Wagner being date Sept. 28 '63.

Book mark:

Beck

(858) Copyist

L | 3 | U.S.C.T.

James Larkins

Pri, Co. F, 3 Reg't U. S. Col'd Infantry.

Appears on

Company Muster Roll

for Nov & Dec, 1863.

Present or absent Present

Stoppage, $ 100 for

Due Gov't, $ 100 for

Remarks:

Book mark:

WBuck

(858) Copyist

L | 3 | U.S.C.T.

James Larkins

Priv., Co. F, 3 Reg't U. S. Col'd Infantry.

Appears on

Company Muster Roll

for Jan & Feb, 1864.

Present or absent Present

Stoppage, $ 100 for

Due Gov't, $ 100 for

Remarks:

Book mark:

W Beck

(358) Copyist

L | 3 | U.S.C.T.

James Larkins

Priv, Co. F, 3 Reg't U. S. Col'd Infantry.

Appears on

Company Muster Roll

for Mar. & Apr., 1864.

Present or absent Absent

Stoppage, $ 100 for

Due Gov't, $ 100 for

Remarks:

Sick in Genl Hospital Beaufort, S.C.

Book mark:

Beck

(858) Copyist

NARA 126

2 | 3 | U.S.C.T.

James Larkins

Pvt., Co. F, 3 Reg't U. S. Col'd Infantry.

Appears on

Company Muster Roll

for May & June, 1864.

Present or absent Present

Stoppage, $ 100 for

Due Gov't, $ 100 for

Remarks:

Book mark:

L. B. Sayer

Copyist

(358)

L | 3 | U.S.C.T.

James Larkins

Pvt, Co. F, 3 Reg't U. S. Col'd Infantry.

Appears on

Company Muster Roll

for July & August, 1864.

Present or absent Present

Stoppage, $ 100 for

Due Gov't, $ 100 for

Remarks: Enlisted 19 April 1861

Book mark:

L B Sayer

(858) Copyist

NARA 127

L | 3 | U.S.C.T.

James Larkins

Pvt, Co. F, 3 Reg't U. S. Col'd Infantry.

Appears on

Company Muster Roll

for Sept & Oct, 1864.

Present or absent Present

Stoppage, $ 43/100 for advance.

Due Gov't, $ 100 for

Remarks: Free - Paid but 7.00 per mo from Enlistment to Apl 30-64 Back Pay due

Book mark:

C. B. Sayer
Copyist

(358)

NARA 128

L | 3 | U.S.C.T.

James Larkins

Pvt, Co. F, 3 Reg't U. S. Col'd Infantry.

Appears on

Company Muster Roll

for Nov & Dec, 1864

Present or absent Present

Stoppage, $ 48/100 for Ordnance

Due Gov't, $ 100 for

Remarks: ~~Free~~ - Paid but $7.00 per month to apl 30-64 back pay due + Free on or before april 19 - 1861

Book mark:

C B Singer
Copyist

(858)

NARA 129

L | 3 | U.S.C.T.

James Larkins

Pri, Co. F, 3 Reg't U. S. Col'd Infantry.

Appears on

Company Muster Roll

for Jan & Feby, 1865.

Present or absent Present

Stoppage, $ 43/100 for ordnance

Due Gov't, $ /100 for

Remarks: Free on or before apl 19 1861 - Paid but 7.00 per month from Enlistment to apl 30-64 Back pay due.

Book mark:

C B Sawyer
Copyist

(358)

NARA 130

L | 3 | U.S.C.T.

James Larkins

Pvt, Co. F, 3 Reg't U. S. Col'd Infantry.

Appears on

Company Muster Roll

for March & April, 1865.

Present or absent Present

Stoppage, $ 0. 40/100 for Ord.

Due Gov't, $ ...... 100 for ......

Remarks: Free on or before Apr 19/64
Paid But $7.00 per Month
from Enlistment to April 30/64
Back Pay due.

Book mark:

S. W. Tucker
Copyist

(358)

L | 3 | U.S.C.T.

James Larkens

Pvt, Co. F, 3 Reg't U. S. Col'd Infantry.

Appears on

Company Muster Roll

for May & June, 1865.

Present or absent Present

Stoppage, $ 0 43/100 for Ord

Due Gov't, $ ..... 100 for

Remarks: Free on or before Apr 19 Paid but $7.00 per Month from Enlistment to Apr 30/64 Back Pay due

NEXT ROLL ON FILE MUSTER OUT.

ROLL ON FILE MUSTER OUT

NEXT ROLL ON FILE MUSTER OUT

Book mark:

S. W. Tucker

(858) Copyist

L | 3 | **U.S.C.T.**

James Larkins

Private, Co. F, 3 Reg't U. S. Col'd Infantry.

Appears on a

Detachment Muster-out Roll

of the organization named above. Roll dated Jacksonville, Fla., Oct. 31, 1865.

Muster-out to date Oct. 31, 1865.

Last paid to June 30, 1865

Clothing account:

Last settled ....., 186 ; drawn since $..... 100

Due soldier $..... 100; due U. S. $..... 100

Am't for cloth'g in kind or money adv'd $ 4 90/100

Due U. S. for arms, equipments, &c., $ 6 100

Bounty paid $..... 100 due $ 100 100

Remarks: Private since Enlistment. Mustered out in obedience to Circular No. 44 War Dept, a. G.O. 1865 and G.O. No. 10 Mil. Div. of the Gulf – his services being no longer required.

Book mark:

O. J. Markle,
Copyist.

(349)

NARA 133

L	3	U.S.C.T.

James Lartin

Pvt, Co. F, 3 Reg't U. S. Col'd Infantry.

Appears on **Co. Muster-out Roll,** dated

Jacksonville, Fla Oct 13, 1865.

Muster-out to date ...., 186 .

Last paid to June 30, 1865.

Clothing account:

Last settled ...., 186 ; drawn since $ 100

Due soldier $ 20 87/100; due U. S. $ 100

Am't for cloth'g in kind or money adv'd $ 100

Due U. S. for arms, equipments, &c., $ 6 00/100

Bounty paid $ .... 100; due $ 100 100

Remarks: Stopp'd 4 90 for C & G. E.
Enrolled as Private
Discharged. To remain
in the State Under G. O. No 10
Mil. Div of the Gulf,
Not Paid on this roll

Book mark: ....

(861)

S. W. Tucker
Copyist.

712

Lavern Alfred

Co B, 3 U.S. Col'd Inf.

Private | Private

CARD NUMBERS.

1	6251803.	26	
2	6251521.	27	
3	6251880.	28	
4	6254578.	29	
5	6254664.	30	
6		31	
7		32	
8		33	
9		34	
10		35	
11		36	
12		37	
13		38	
14		39	
15		40	
16		41	
17		42	
18		43	
19		44	
20		45	
21		46	
22		47	
23		48	
24		49	
25		50	

Book Mark:

See also

L | 3 | **U.S.C.T.**

Alfred Lavern

Appears with rank of Pvt on

Muster and Descriptive Roll of a Detachment of Substitutes forwarded

for the 3 Reg't U. S. Col'd Inf. Roll dated Chelley Hills Pa Camp Wm Penn, Feb 10, 1865.

Where born Canada West

Age 35 y'rs; occupation Barber

When enlisted ....., 186 .

Where enlisted .....

For what period enlisted 3 years.

Eyes Brown; hair Blk

Complexion Dk; height 5 ft. 10 in.

When mustered in Dec 30, 1864.

Where mustered in Hector Pf Pa

Bounty paid $ 100; due $ 100

Where credited .....

Company to which assigned .....

Remarks: Sub for Reuben F. Davis. Hector Pf Potter Co 144 Sub Dist 18 Enl Dist

Book mark: .....

Davis

(339) Copyist

NARA 136

Sick

+ Entire entry can-
celed on roll except
"sick"

JAN. 19
1891
6251803

L. | 9. | **U.S.C.T.**

Alfred Laverne

Appears with rank of Private on

Muster and Descriptive Roll of a Detachment of Drafted Men and Substitutes forwarded

for the 9 Reg't U. S. Col'd Inf. Roll dated Chelten Hills, Pa. Camp William Penn, May 8th, 1865.

Where born Canada West.

Age 35 years; occupation Barber

~~Drafted and~~ mustered in:

When Dec. 30th, 1864.

Where Hector, Pa.

Period 3 years.

Eyes Brown; hair Bld.

Complexion Dark; height 5 ft. 10 in.

Paid bounty and advance pay, $ 100

Bounty due $ 100

Where credited

Company to which assigned

Remarks: Substitute for Reuben F. Davis. Hector, Potter Co., Pa. 18 144 Cong. Dist.

Book mark:

J. B. Casey

(840) Copyist

NARA 138

L | 3 | **U.S.C.T.**

Alfred Lavanne

Appears with rank of Pvt on

Muster and Descriptive Roll of a Detachment of Substitutes forwarded

for the 3 Reg't U. S. Col'd Inf. Roll dated

Not Dated, , 186 .

Where born Canada, West.

Age 35 y'rs; occupation Barber

When enlisted , 186 .

Where enlisted

For what period enlisted 3 years.

Eyes Brown; hair Blk

Complexion Dark; height 5 ft. 10 in.

When mustered in Dec 30, 1864.

Where mustered in Hector Tp

Bounty paid $ 100; due $ 100

Where credited

Company to which assigned

Remarks: Sub for Reuben T Davis. Hector Tp Potter co. Pa 18-144 Dist.

Book mark:

Saltis
Copyist

(339)

L | 3 | U.S.C.T.

Alfred Laverne,

Pvt, Co. B, 3 Reg't U. S. Col'd Infantry.

Appears on

Company Muster Roll

for May and June, 1863.

Joined for duty and enrolled:

When Substitute, 186 .*

Where *

Period 3 years.*

Present or absent Present.

Stoppage, $ 100 for

Due Gov't $ 100 for

Remarks: Free on or before April 19. 61. Joined Co. May 1st 1863.

NEXT ROLL ON FILE MUSTER OUT.

* ☞ See enrollment on card from muster-in roll.

Book mark:

Calloway.

(358c) Copyist.

NARA 148

L | 3 | U.S.C.T.

Alfred Lavern

Priv., Co. B, 3 Reg't U. S. Col'd Infantry.

Appears on **Co. Muster-out Roll,** dated Jacksonville Fla, Oct. 31, 1865.

Muster-out to date Oct 31, 1865.

Last paid to June 30, 1865.

Clothing account:

Last settled....., 186 ; drawn since $.....100

Due soldier $ 40 30/100; due U. S. $.....100

Am't for cloth'g in kind or money adv'd $.....100

Due U. S. for arms, equipments, &c., $ 6 00/100

Bounty paid $.....100; due $.....100

Remarks: Private from enrollment.

Book mark:

T. M. Jackson

(361) Copyist.

713

Lawrence Henry

Co F, 3 U.S. Col'd Inf.

Corporal | Private

CARD NUMBERS.

1	6258403	26	
2	6258486	27	
3	6258564	28	
4	6258641	29	
5	6258720	30	
6	6258839	31	
7	6258917	32	
8	6258991	33	
9	6259063	34	
10	6259137	35	
11	6259213	36	
12	6259297	37	
13	6259389	38	
14	6259467	39	
15	9061117	40	
16		41	
17		42	
18		43	
19		44	
20		45	
21		46	
22		47	
23		48	
24		49	
25		50	

Book Mark:

See also

NARA 142

L. | 3 | U.S.C.T.

Henry Lawrence

, Co. F, 3 Reg't U. S. Col'd Inf.

Appears on

Company Descriptive Book

of the organization named above.

DESCRIPTION.

Age 45 years; height 5 feet 11 inches.

Complexion Light Yellow

Eyes Dark brown, hair Gray.

Where born Philada. Penna.

Occupation Bootblack.

ENLISTMENT.

When July 10, 1863.

Where Philada. Penna.

By whom Lt. Col. Wagner; term 3 y'rs.

Remarks: Mustered in by Capt. Sergeant U.S.A. July 10. 1863. Scar from Cut near left Eye. Letters "H&L" Brig in full sail and 2 Stars in India Ink on right fore-arm.

R. Springsguth Copyist.

(383g)

L | 3 | U.S.C.T.

Henry Lawrence

Capt., Co. F., 3 Reg't U. S. Col'd Infantry.

Age 43 years.

Appears on

Company Muster-in Roll

of the organization named above. Roll dated Philadelphia, Pa. Aug. 10, 1863.

Muster-in to date July 10, 1863

Joined for duty and enrolled:

When July 10, 1863.

Where Philadelphia, Pa.

Period 3 years.

Remarks:

Book mark:

Beck

(856) Copyist.

NARA 144

L | 3 | U.S.C.T.

Henry Lawrence

Corp., Co. F, 3 Reg't U. S. Col'd Infantry.

Appears on

Company Muster Roll

for Aug 10 to 31, 1863.

Present or absent Present

Stoppage, $ 100 for

Due Gov't, $ 100 for

Remarks:

Book mark:

Beck

(258) Copyist

L | 3 | U.S.C.T.

Henry Lawrence

Sergt., Co. F, 3 Reg't U. S. Col'd Infantry.

Appears on

Company Muster Roll

for Sept. & Oct., 1863.

Present or absent Present

Stoppage, $ 100 for

Due Gov't, $ 100 for

Remarks:

Book mark:

Beck

Copyist

(858)

L | 3 | U.S.C.T.

Henry Lawrence

Sergt., Co. F, 3 Reg't U. S. Col'd Infantry.

Appears on

Company Muster Roll

for Nov & Dec, 1863.

Present or absent Present

Stoppage, $ 100 for

Due Gov't, $ 100 for

Remarks:

Book mark:

Wieck

(858) Copyist

L | 3 | U.S.C.T.

Henry Lawrence

Sergt., Co. F, 3 Reg't U. S. Col'd Infantry.

Appears on

Company Muster Roll

for Jan & Feb, 1864.

Present or absent Present

Stoppage, $ 100 for

Due Gov't, $ 100 for

Remarks:

Book mark:

(358) Copyist

L | 3 | U.S.C.T.

Henry Lawrence

Priv, Co. F, 3 Reg't U. S. Col'd Infantry.

Appears on

Company Muster Roll

for Mar & Apr, 1864.

Present or absent Present

Stoppage, $ 100 for

Due Gov't, $ 100 for

Remarks:

Book mark:

Beck

(358) Copyist

L | 3 | U.S.C.T.

Henry Lawrence

Corp., Co. F, 3 Reg't U. S. Col'd Infantry.

Appears on

Company Muster Roll

for May & June, 1864

Present or absent Absent

Stoppage, $ ..... 100 for .....

Due Gov't, $ ..... 100 for .....

Remarks: in Gen Hospt Jacksonville Fla

Book mark:

L. B. Sayer

(358) Copyist

L | 3 | U.S.C.T.

Henry Lawrence

Pvt., Co. F, 3 Reg't U. S. Col'd Infantry.

Appears on

Company Muster Roll

for July & August, 1864.

Present or absent Present

Stoppage, $ 100 for

Due Gov't, $ 100 for

Remarks: Free on or before 19 April 1861

Book mark:

L. B. Sayer

(858) *Copyist*

NARA 151

L | 3 | U.S.C.T.

Henry Laurence

Mu., Co. F, 3 Reg't U. S. Col'd Infantry.

Appears on

Company Muster Roll

for Sept. & Oct., 1864.

Present or absent Present

Stoppage, $ 2 13/100 for Ordnance

Due Gov't, $ ___ 100 for

Remarks: Free—Paid but 7.00 per mo from Enlistment to Apl 30-64 Back Pay due

Book mark:

C. B. Sayer
Copyist

(858)

NARA 152

L | 3 | U.S.C.T.

Henry Lawrence

Pvt., Co. F, 3 Reg't U. S. Col'd Infantry.

Appears on

Company Muster Roll

for Nov & Dec, 1864.

Present or absent Present

Stoppage, $ 2 13/100 for Ordnance

Due Gov't, $ ___ /100 for

Remarks: + ~~Free~~ - Paid but $7.00 per month from enlistment to Apl 30-64 back pay due
+ Free man before April 19 1861

Book mark:

C. B. Sayer
Copyist

(358)

NARA 153

L | 3 | U.S.C.T.

Henry Laurine

Priv, Co. F, 3 Reg't U. S. Col'd Infantry.

Appears on

Company Muster Roll

for Jany & Feby, 1865.

Present or absent Present

Stoppage, $ 2 13/100 for ordnance

Due Gov't, $ ___ /100 for ___

Remarks: Free man before Apr 19 1861 - Paid but $7.00 per month from enlistment to Apr 30 - 64 back pay due

Book mark:

C. B. Sawyer
Copyist

(358)

L | 3 | U.S.C.T.

Henry Lawrence

Pvt, Co. F, 3 Reg't U. S. Col'd Infantry.

Appears on

Company Muster Roll

for March & April, 1865.

Present or absent Present

Stoppage, $ 2 13/100 for Ord

Due Gov't, $ 100 for

Remarks: Free on or before Apr 19/61
Paid. But $7.00 per Month
from Enlistment to Apr 30/64
Back Pay Due

Book mark:

L. W. Tucker

(358) Copyist

NARA 155

L | 3 | U.S.C.T.

Henry Lawrence

Pvt, Co. F, 3 Reg't U. S. Col'd Infantry.

Appears on

Company Muster Roll

for May & June, 1865.

Present or absent Present

Stoppage, $ 2 13/100 for Ord

Due Gov't, $ ___ 100 for

Remarks: Free on or before Apl 19 '61
Paid but $7.00 per Month
from Enlistment to April 30 '64
Back pay due

NEXT ROLL ON FILE MUSTER OUT.

Book mark:

S. W. Tucker
Copyist

(858)

L | 3 | U.S.C.T.

Henry Lawrence

Pvt, Co. D, 3 Reg't U. S. Col'd Infantry.

Appears on **Co. Muster-out Roll,** dated Jacksonville Fla Oct 31, 1865.

Muster-out to date Oct 31, 1865.

Last paid to June 30, 1865.

Clothing account:

Last settled....., 186 ; drawn since $.....100

Due soldier $ 20 60/100; due U. S. $.....100

Am't for cloth'g in kind or money adv'd $.....100

Due U. S. for arms, equipments, &c., $ 6 00/100

Bounty paid $.....100; due $ 100 100

Remarks: Joined as Corpl, Apptd Sergt Sept 1st 1863 reduced to ranks March 8, 64

Book mark:

E. W. Tucker

(361) Copyist.

NARA 157

NARA 158

S. 7709?6 - 2 New. Reg.

NARA 159

L. | 3 | U.S.C.T.

Solomon Leeks

, Co. I, 3 Reg't U. S. Col'd Inf.

Appears on

Company Descriptive Book

of the organization named above.

DESCRIPTION.

Age 22 years; height 5 feet 6½ inches.

Complexion Blk

Eyes Blk ; hair Blk.

Where born Central America

Occupation Cook

ENLISTMENT.

When Sept. 23, 1864.

Where Concord N. H.

By whom Maj. Whittlesey ; term 3 y'rs.

Remarks Substitute 2nd N. H. Dist

Daggett
Copyist.

(383g)

L | 3 | **U.S.C.T.**

Solomon Leeks

Appears with rank of Pvt on

Muster and Descriptive Roll of a Detachment of Substitutes forwarded

for the 3 Reg't U. S. Col'd Inf. Roll dated

Concord N H, Oct 28, 1864.

Where born Central America

Age 22 y'rs; occupation Cook

When enlisted Sept 23, 1864.

Where enlisted Concord

For what period enlisted 3 years.

Eyes Black; hair Black

Complexion Black; height 5 ft. 6½ in.

When mustered in Sept 23, 1864.

Where mustered in Concord

Bounty paid $ 100; due $ 100

Where credited

Company to which assigned

Remarks: Substitute for Samuel R. Shepherd of Ward 5 Manchester N H,

Book mark:

Davis

(339) Copyist

G | 3 | U.S.C.T.

Solomon Leeks

Pvt., Co. I, 3 Reg't U. S. Col'd Infantry.

Appears on

Company Muster Roll

for Nov. & Dec, 1864.

Present or absent Present

Stoppage, $ 100 for

Due Gov't, $ 100 for

Remarks:

Book mark:

A. L. Moore

(255) Copyist

G | 3 | U.S.C.T.

Solomon Geeks

R, Co. I, 3 Reg't U. S. Col'd Infantry.

Appears on

Company Muster Roll

for Jany & Feby, 186 5.

Present or absent Present

Stoppage, $ 100 for

Due Gov't, $ 100 for

Remarks:

Book mark:

O. Brown

(258) Copyist

L. | 3 | U.S.C.T.

Solomon Leake

Pvt., Co. I, 3 Reg't U. S. Col'd Infantry.

Appears on

Company Muster Roll

for Mar. & Apr., 186 5.

Present or absent Present

Stoppage, $ 100 for

Due Gov't, $ 100 for

Remarks: Stop for 1. Canteen.

Book mark:

J. E. White

Copyist

(858)

NARA 164

L.	3	U.S.C.T.

Solomon Leeko

Pvt., Co. I, 3 Reg't U. S. Col'd Infantry.

Appears on

Company Muster Roll

for May & June, 1865.

Present or absent Present.

Stoppage, $ .... 100 for ....

Due Gov't, $ .... 100 for ....

Remarks: Stop for 1. Canteen.

NEXT ROLL ON FILE MUSTER OUT.

Book mark: ....

N. G. White
Copyist

(858)

L. | 3 | U.S.C.T.

Solomon Leake

Pvt., Co. D, 3 Reg't U. S. Col'd Infantry.

Appears on **Co. Muster-out Roll,** dated Jacksonville, Fla., Oct. 31, 1865.

Muster-out to date Oct. 31, 1865.

Last paid to June 30 1865.

Clothing account:

Last settled....., 186 ; drawn since $.....100

Due soldier $ 31 99/100; due U. S. $.....100

Am't for cloth'g in kind or money adv'd $.....100

Due U. S. for arms, equipments, &c., $ 6 100

Bounty paid $.....100; due $.....100

Remarks: Joined as Private

Book mark :

J. B. White,

(861) Copyist.

Alexander

Co. K, 3 U.S. Col'd Inf.

Private | Private

CARD NUMBERS.

1	6260739	26	
2	6260839	27	
3	6260919	28	
4	6261000	29	
5	6261081	30	
6	6261160	31	
7	6261237	32	
8	6261310	33	
9	6261384	34	
10	6261461	35	
11	6261538	36	
12	6261623	37	
13	6261717	38	
14	6252037	39	
15	6261808	40	
16	9061318	41	
17	a-338-RCY-1866	42	
18		43	
19		44	
20		45	
21		46	
22		47	
23		48	
24		49	
25		50	

Book Mark: a-338-RCY-1866

See also

L. | 3 | U.S.C.T.

Alexander Lee

, Co. H, 3 Reg't U. S. Col'd Inf.

Appears on

Company Descriptive Book

of the organization named above.

DESCRIPTION.

Age 21 years; height 5 feet 10 inches.

Complexion Yellow

Eyes Black; hair Black

Where born Chester Co. Penn.

Occupation Farmer

ENLISTMENT.

When July 18, 1863.

Where Phila. Penn.

By whom Lt Col. Wagner, term 3 y'rs.

Remarks:

Daggett

(383g) Copyist.

L | 3 | U.S.C.T.

Alexander Lee

Pvt., Co. H, 3 Reg't U. S. Col'd Infantry.

Age 21 years.

Appears on

Company Muster-in Roll

of the organization named above. Roll dated Philadelphia Pa July 25, 1863.

Muster-in to date July 18, 1863.

Joined for duty and enrolled:

When July 18, 1863.

Where Phila. Pa.

Period 3 years.

Remarks:

Book mark:

C G Smith

(356) Copyist.

L | 3 | U.S.C.T.

Alexander Lee

Pri, Co. H, 3 Reg't U. S. Col'd Infantry.

Appears on

Company Muster Roll

for July 25 to Aug 31, 1863.

Present or absent Present

Stoppage, $ 100 for

Due Gov't, $ 100 for

Remarks: To be stopped one (1) Knapsack $2.14

Book mark:

O G Smith

(358) Copyist

L | 3 | U.S.C.T.

Alexander Lee

Pri, Co. H, 3 Reg't U. S. Col'd Infantry.

Appears on

Company Muster Roll

for Sept & Oct, 1863.

Present or absent Present

Stoppage, $ 100 for

Due Gov't, $ 100 for

Remarks:

Book mark:

O G Smith

(358) Copyist

L | 3 | U.S.C.T.

Alexander Lee

Pri, Co. H, 3 Reg't U. S. Col'd Infantry.

Appears on

Company Muster Roll

for Nov & Dec, 1863.

Present or absent Present

Stoppage, $ 100 for

Due Gov't, $ 100 for

Remarks:

Book mark:

O W Smith

Copyist

(858)

L | 3 | U.S.C.T.

Alexander Lee

Pri, Co. H, 3 Reg't U. S. Col'd Infantry.

Appears on

Company Muster Roll

for Jan & Feb, 1864

Present or absent Present

Stoppage, $ 100 for

Due Gov't, $ 100 for

Remarks:

Book mark:

O G Smith

(358) Copyist

L | 3 | U.S.C.T.

Alexander Lee

Pvt., Co. H, 3 Reg't U. S. Col'd Infantry.

Appears on

Company Muster Roll

for March & April, 1864

Present or absent Present

Stoppage, $ 100 for

Due Gov't, $ 100 for

Remarks: Stop for one Knapsack, one Haversack & one Canteen.

Book mark:

(358) W F Rogers Copyist

L | 3 | U.S.C.T.

Alexander Lee

Pri., Co. H, 3 Reg't U. S. Col'd Infantry.

Appears on

Company Muster Roll

for May & June, 1864.

Present or absent Present

Stoppage, $ 100 for

Due Gov't, $ 100 for

Remarks: Stop for 1 Haversack, 1 Canteen, 1 Knap-sack

Book mark:

Henderson

(358) *Copyist*

L | 3 | U.S.C.T.

Alexander Lee

Pvt., Co. H, 3 Reg't U. S. Col'd Infantry.

Appears on

Company Muster Roll

for July & Aug., 186 4

Present or absent Present

Stoppage, $ 100 for

Due Gov't, $ 100 for

Remarks: Stop for one Knapsack, one Haversack, one Canteen, $2.76. Free on or before April 19, 1861.

Book mark:

W F Ragan

(358) Copyist

L | 3 | U.S.C.T.

Alexander Lee

Pvt., Co. H, 3 Reg't U. S. Col'd Infantry.

Appears on

Company Muster Roll

for Sept. & Oct., 1864.

Present or absent Present

Stoppage, $ 100 for

Due Gov't, $ 100 for

Remarks: Free. Paid $7.00 for mo. from enlistment to Feb'y 29, 1864. Back pay due.

Book mark:

(358)

W Z Rogers

Copyist

L | 3 | U.S.C.T.

Alexander Lee

Pvt., Co. H, 3 Reg't U. S. Col'd Infantry.

Appears on

Company Muster Roll

for Nov. & Dec., 1864.

Present or absent Present

Stoppage, $ 100 for

Due Gov't, $ 100 for

Remarks: Free. Paid $7.00 pr. mo. from enlistment to July 29, 1864. Back pay due.

Book mark:

W F Rogan

(858) Copyist

L | 3 | U.S.C.T.

Alexander Lee

Pvt., Co. H, 3 Reg't U. S. Col'd Infantry.

Appears on

Company Muster Roll

for Jan'y & Feby, 1865.

Present or absent Present

Stoppage, $ —— 47/100 for Clothing, Camp & Garrison Equipage.

Due Gov't, $ ..... 100 for .....

Remarks: Free on or before April 19, 1861.

Book mark: .....

W. P. Regan

(358) Copyist

L | 3 | U.S.C.T.

Alexander Lee

Pvt, Co. H, 3 Reg't U. S. Col'd Infantry.

Appears on

Company Muster Roll

for Mar. & Apr., 1865.

Present or absent Present.

Stoppage, $ 49/100 for C & Cl.

Due Gov't, $ 100 for

Remarks: Free.

Book mark:

(858) Copyist

NARA 180

L.	3	U.S.C.T.

Alexander Lee.

Pri., Co. H, 3 Reg't U. S. Col'd Infantry.

Appears on

Company Muster Roll

for May & June, 1865.

Present or absent Present.

Stoppage, $ 0. 43/100 for Ord & $0.49 for C & G. E.

Due Gov't, $ ..... 100 for

Remarks: Free on or before Apr. 19/61.

NEXT ROLL ON FILE MUSTER OUT

Book mark: [illegible]

[illegible]

(358)

Copyist

JAN. 19 1891

6261717

G. O. No. 39.

L | 3 | U.S.C.T.

Alexander Lee

Pvt, Co. H, 3 Reg't U. S. Col'd Infantry.

Appears on **Co. Muster-out Roll,** dated Jacksonville Fla, Oct. 31, 1865.

Muster-out to date Oct. 31, 1865.

Last paid to June 30, 1865.

Clothing account:

Last settled....., 186 ; drawn since $.....100

Due soldier $.....100; due U. S. $ 3.80/100

Am't for cloth'g in kind or money adv'd $.....100

Due U. S. for arms, equipments, &c., $.....100

Bounty paid $ none/100; due $ 100.00/100

Remarks: Pvt from enrollment. Discharged without waiting sentence of G. C. M.

Book mark: See A 338. Vol. 4. Feb 8/66 (over)

(361) Copyist.

JAN. 19 ☆1891☆
6261808

V. 140. P. 117, 72.

NARA 184

L | 3 | U.S.C.T.

Alexander Lee,

, Co. "K", 3" Reg't. U.S.C.T.

NOTATION.

Book mark: A. 338. V.C.T. 1866.

War Department,

Adjutant General's Office,

Washington, Dec. 6, 1866

Call from

returned with report.

The above book mark was noted on rolls in order to preserve results of search in this case.

E. P. Cravaizier

(475) *Copyist.*

L | 3 | U.S.C.T.

Alexander Lee

Private, Co. H, 3 Reg't U. S. Col'd Infantry.

Appears on a

Detachment Muster-out Roll

of the organization named above. Roll dated Philadelphia, Pa., Feb. 27, 1867.

Muster-out to date Oct. 31, 1865.

Last paid to June 30, 1865

Clothing account:

Last settled ....., 186 ; drawn since $.....100

Due soldier $.....100; due U. S. $.....100

Am't for cloth'g in kind or money adv'd $.....100

Due U. S. for arms, equipments, &c., $.....100

Bounty paid $.....100 due $.....100

Remarks: Sentenced by G. O. 39 hd. Qrs. deptmt. Florida, Tallahassee Nov. 13, 1865 to be Confined at hard labor for Two Years at such place as the Commanding Officer may direct with loss of all pay now due or to

Book mark: V. 140 P. 117. 72. Sentenced

[Over]

C. J. Markle,

(349) Copyist.

NARA 186

JAN. 19
6252037
1891

become due. Charge Mutiny.
Released from Confinement by Ex 38 O.
25 head 2rs. deptmt of the Gulf
Feb. 17, 1867 and ordered to report
to Chief M.O. Pennsylvania for
his discharge. On the Muster Out
Roll of this Co. dated Oct. 31, 1865
the statement is made Due the
Gov't for Clothing $3.80 drew
Clothing while in Confinement
$71.50.

by G.O. 39 head 2rs. deptmt.
Florida, Tallahassee Nov. 13, 1865
to be confined at hard labor for
Two Years at such place as the
Commanding Officer may direct
with loss of all pay now due or
to become due.

Lee, Alexander

Pri. Co. H, 3 Reg't U. S. C. Inf.

1 Enclosures.

Bed Cards	Descriptive Lists
Burial Records	Final Statements
Certs. of Dis. for Discharge	Furloughs
C. M. Charges 1	Med. Des. Lists
Med. Certificates	Orders

Other papers relating to—

Admission to Hosp'l	Furlough
Casualty Sheet (Officer's)	Med. Examination
Confinement	Misc. Information
Contracts	Pay or Clothing
Death or Effects	Personal Reports
Desertions	Rank
Discharge from Hosp'l	Transfer to Hosp'l
Discharge from Service	Transfer to V. R. C.
Duty	Transportation

NARA 188

Charge — Mutiny

Specification. — In this that he Private Alexander Lee Co. H, 3rd. W.J. C.T. did engage in a mutiny to resist the authority of his superior Officers in the execution of their office and did excite and encourage others to resist in like manner as which time and in connection wherewith numerous enlisted men discharged their firearms with intent to kill Lieut Col. Brown and Lieut. Brown, his superior Officers in the execution of their Office, This at Jacksonville, Fla. on the 29th day of Oct 1865.

Official

J. Holt.

Judge Advocate General.

3.

A=G=Mis=Vol1=1867.

Lee Andrew

Co. E, 3 U.S. Col'd Inf.

Private Sergeant

CARD NUMBERS.

1	6257155.	26	
2	6257235.	27	
3	6257327.	28	
4	6257408.	29	
5	6257481.	30	
6	6257536.	31	
7	6257620.	32	
8	6257702.	33	
9	6257776.	34	
10	6257855.	35	
11	6257934.	36	
12	6258004.	37	
13	6258096.	38	
14	6258190.	39	
15	6258284.	40	
16	9060985	41	
17		42	
18		43	
19		44	
20		45	
21		46	
22		47	
23		48	
24		49	
25		50	

Book Mark:

See also

NARA 191

S.C. 1129386 P.O. M.O.M.
S 2962790 and W.D.

L. | 3 | U.S.C.T.

Andrew Lee

....., Co. E, 3 Reg't U. S. Col'd Inf.

Appears on

Company Descriptive Book

of the organization named above.

DESCRIPTION.

Age 27 years; height 5 feet 7 inches.

Complexion Black

Eyes Black; hair Black;

Where born Chester, Penn.a

Occupation Farmer

ENLISTMENT.

When July 16th, 1863.

Where Philad.a Penn.a

By whom Col. Wagner; term 3 y'rs.

Remarks:

R. Springsmith

(3834) Copyist.

L | 3 | U.S.C.T.

Andrew Lee

Pvt., Co. E, 3 Reg't U. S. Col'd Infantry.

Age 37 years.

Appears on

Company Muster-in Roll

of the organization named above. Roll dated Phila Pa, Aug 1, 1863.

Muster-in to date July 6, 1863

Joined for duty and enrolled:

When July 6, 1863.

Where Philadelphia Pa

Period 3 years.

Remarks:

Book mark:

S. O. York
Copyist.

(856)

L | 3 , U.S.C.T.

Anderson Lee

Pvt., Co. E, 3 Reg't U. S. Col'd Infantry.

Appears on

Company Muster Roll

for Aug. 1 to 31, 1863.

Present or absent Present.

Stoppage, $ 100 for

Due Gov't, $ 100 for

Remarks:

Book mark:

Daggett

(858) Copyist

L | 3 | U.S.C.T.

Andrew Lee

Pris., Co. E, 3 Reg't U. S. Col'd Infantry.

Appears on

Company Muster Roll

for Sept & Oct, 1863.

Present or absent Present

Stoppage, $ 100 for

Due Gov't, $ 100 for

Remarks:

Book mark:

S. P. York

(858) Copyist

L | 3 | U.S.C.T.

Andrew Lee

Pvt, Co. E, 3 Reg't U. S. Col'd Infantry.

Appears on

Company Muster Roll

for Nov & Dec, 1865.

Present or absent Present

Stoppage, $ 100 for

Due Gov't, $ 100 for

Remarks:

Book mark:

S P York

(358) Copyist.

L | 3 | U.S.C.T.

Andrew Lee

Priv., Co. E, 3 Reg't U. S. Col'd Infantry.

Appears on

Company Muster Roll

for Jany & Feby, 1864.

Present or absent Present

Stoppage, $ 100 for

Due Gov't, $ 100 for

Remarks:

Book mark:

D. O. York

Copyist

(858)

NARA 198

L | 3 | U.S.C.T.

Andrew Lee

Corpl Co. E, 3 Reg't U. S. Col'd Infantry.

Appears on

Company Muster Roll

for March & April, 1864.

Present or absent Present

Stoppage, $ ---- 100 for ----

Due Gov't, $ ---- 100 for ----

Remarks Stop price Shelter Tent one Haversack

Book mark:

(858)

S P York
Copyist

L | 3 | U.S.C.T.

Andrew Lee

Corpl, Co. E, 3 Reg't U. S. Col'd Infantry.

Appears on

Company Muster Roll

for May & June, 1864

Present or absent Present

Stoppage, $ ..... 100 for .....

Due Gov't, $ ..... 100 for .....

Remarks: .....

Book mark: .....

S W Forness

Copyist

(358)

NARA 200

L | 3 | U.S.C.T.

Andrew Lee.

Corpl, Co. E, 3 Reg't U. S. Col'd Infantry.

Appears on

Company Muster Roll

for July & Aug, 1864

Present or absent Present

Stoppage, $ ___ 100 for ___

Due Gov't, $ ___ 100 for ___

Remarks: Free on or before April 19. 1861

Book mark: ___

S W Forress
Copyist

(858)

NARA 201

L | 3 | U.S.C.T.

Andrew Lee

Sergt, Co. E, 3 Reg't U.S. Col'd Infantry.

Appears on

Company Muster Roll

for Sept & Oct, 1864

Present or absent Present

Stoppage, $ ... 100 for ...

Due Gov't, $ ... 100 for ...

Remarks: Paid $7 pr month from enlistment to April 30/64. back pay due

Book mark: ...

S W Forrell

Copyist

(858)

NARA 288

L | 3 | U.S.C.T.

Andrew Lee

Serg't Co. E, 3 Reg't U. S. Col'd Infantry.

Appears on

Company Muster Roll

for Oct & Dec, 1864

Present or absent Present

Stoppage, $ ..... 100 for .....

Due Gov't, $ ..... 100 for .....

Remarks: Paid $7 per month from enlistment to June 30/64. back pay due.

Book mark:

S W Jones

(358) Copyist

L | 3 | U.S.C.T.

Andrew Lee

Sergt, Co. E, 3 Reg't U. S. Col'd Infantry.

Appears on

Company Muster Roll

for Jany & Feb, 1865.

Present or absent Present

Stoppage, $ 100 for

Due Gov't, $ 100 for

Remarks: Paid $7 per month from enlistment to June 30/64, back pay due.

Book mark:

S W Fowler

(858) Copyist

NARA 284

L | 3 | U.S.C.T.

Andrew Lee

Sergt, Co. E, 3 Reg't U. S. Col'd Infantry.

Appears on

Company Muster Roll

for March & April, 1865.

Present or absent Present

Stoppage, $ ..... 100 for .....

Due Gov't, $ ..... 100 for .....

Remarks: Paid $7 - per mo. from enlistment to Apr 30, 64 & back pay due.

Book mark: .....

(858) Joseph Stewart
Copyist

L | 3 | U.S.C.T.

Andrew Lee

Sergt., Co. E, 3 Reg't U. S. Col'd Infantry.

Appears on

Company Muster Roll

for May & June, 1865.

Present or absent Present

Stoppage, $ 100 for

Due Gov't, $ 100 for

Remarks: Paid $7 per month from enlistment to Apr. 30. 64 back pay due.

Book mark:

W. D. Hoisington

(858) Copyist

L | 3 | U.S.C.T.

Andrew Lee

Sergt, Co. E, 3 Reg't U. S. Col'd Infantry.

Appears on

Company Muster Roll

for July & Aug, 1865.

Present or absent Present

Stoppage, $ 100 for

Due Gov't, $ 100 for

Remarks:

Book mark:

Joseph Stewart

(358) Copyist

L. | 3 | U.S.C.T.

Andrew Lee

Sergt, Co. E, 3 Reg't U. S. Col'd Infantry.

Appears on **Co. Muster-out Roll,** dated Jacksonville Fla, Oct 31, 1865.

Muster-out to date Oct 31, 1865.

Last paid to June 30, 1865.

Clothing account:

Last settled ....., 186 ; drawn since $ 100

Due soldier $ 20 92/100; due U. S. $ 100

Am't for cloth'g in kind or money adv'd $ 100

Due U. S. for arms, equipments, &c., $ 9 00/100

Bounty paid $ ..... 100; due $ 100

Remarks: Route from enlistment Promoted to Corporal April 19, 1864, to Sergt September 22, 1864

Book mark:

Joseph Stewart

(361) Copyist.

717

Lee Jacob

Co. I, 3 U.S. Col'd Inf.

Private | Private

CARD NUMBERS.

1 6251603	26
2 6262612	27
3 6262695	28
4 6262777	29
5 6262867	30
6 6262953	31
7 9061476	32
8	33
9	34
10	35
11	36
12	37
13	38
14	39
15	40
16	41
17	42
18	43
19	44
20	45
21	46
22	47
23	48
24	49
25	50

Book Mark:

See also

S. 770927 - 2nd Reg.

NARA 218

L. | 3 | U.S.C.T.

Jacob Lee

, Co. I, 3 Reg't U. S. Col'd Inf.

Appears on

Company Descriptive Book

of the organization named above.

DESCRIPTION.

Age 20 years; height 5 feet 2 inches.

Complexion Blk

Eyes Blk; hair Blk

Where born Virginia

Occupation Farmer

ENLISTMENT.

When Sept. 14, 1864.

Where Concord N.H.

By whom Maj. Whittlesey; term 3 y'rs.

Remarks: Substitute 2d N.H. Dist

Daggett

(383g) Copyist.

L | 3 | **U.S.C.T.**

Jacob Lee

Appears with rank of Pvt on

Muster and Descriptive Roll of a Detachment of Substitutes forwarded

for the 3 Reg't U. S. Col'd Inf. Roll dated Concord N H, Oct 28, 1864.

Where born Virginia

Age 20 y'rs; occupation Farmer

When enlisted Sept 14, 1864.

Where enlisted Concord

For what period enlisted 3 years.

Eyes Black; hair Black

Complexion Black; height 5 ft. 6 in.

When mustered in Sept 14, 1864.

Where mustered in Concord

Bounty paid $ 100; due $ 100

Where credited

Company to which assigned

Remarks: Substitute for Chas. C. Phillips of New London N H,

Book mark:

Samb

(339) Copyist

3 U.S.C.T.

Jacob Lee

, Co. I, 3 Reg't U. S. Col'd Infantry.

Appears on

Company Muster Roll

for Nov. & Dec, 1864.

Present or absent Present

Stoppage, $ 100 for

Due Gov't, $ 100 for

Remarks:

Book mark:

(858) Copyist

NARA 213

L | 3 | U.S.C.T.

Jacob Lee

Pvt., Co. I, 3 Reg't U. S. Col'd Infantry.

Appears on

Company Muster Roll

for Jany & Feby, 1865.

Present or absent Present

Stoppage, $ 100 for

Due Gov't, $ 100 for

Remarks:

Book mark:

O J Moore

(858) Copyist

NARA 214

L	3	U.S.C.T.

Jacob Lee

Pvt., Co. I, 3 Reg't U. S. Col'd Infantry.

Appears on

Company Muster Roll

for Mar. & Apr., 1865.

Present or absent Present.

Stoppage, $ .... 100 for ....

Due Gov't, $ .... 100 for ....

Remarks: Stop for 1. Cap Letter, 1. Number, 1. Canteen.

Book mark: ....

(858)

N. J. White
Copyist

NARA 215

L. | 3 | U.S.C.T.

Jacob Lee

Pvt., Co. I, 3 Reg't U. S. Col'd Infantry.

Appears on

Company Muster Roll

for May & June, 1865.

Present or absent Present.

Stoppage, $ 100 for

Due Gov't, $ 100 for

Remarks: Stop for 1. Cap Letter & Number, 1. Canteen.

NEXT ROLL ON FILE MUSTER OUT.

Book mark:

N. J. White
Copyist

(358)

NARA 216

L.	3	U.S.C.T.

Jacob Lee

Pvt., Co. I, 3 Reg't U. S. Col'd Infantry.

Appears on **Co. Muster-out Roll**, dated

Jacksonville, Fla, Oct. 31, 1865.

Muster-out to date Oct. 31, 1865.

Last paid to June 30, 1865.

Clothing account:

Last settled ...., 186 ; drawn since $......$\frac{}{100}$

Due soldier $.........$\frac{}{100}$; due U. S. $4 $\frac{04}{100}$

Am't for cloth'g in kind or money adv'd $......$\frac{}{100}$

Due U. S. for arms, equipments, &c., $6 $\frac{}{100}$

Bounty paid $.........$\frac{}{100}$; due $.........$\frac{}{100}$

Remarks: Joined as Private.

Book mark: V. 225. P. 143:76

N. J. White,
Copyist.

(361)

NARA 217

Lee, James

Co. A, 3 U.S. Col'd Inf.

Private

CARD NUMBERS.

1 6252366	26
2 6252443	27
3 6252528	28
4 6252604	29
5 6252680	30
6 6252756	31
7 6252830	32
8 6252906	33
9 6252979	34
10 6253053	35
11 6253130	36
12 6253215	37
13 6253305	38
14 6253401	39
15 6253543	40
16 9060589	41
17 2206 D 1888	42
18	43 Ahm
19	44
20	45
21	46
22	47
23	48
24	49
25	50

Book Mark: 2206-D-(EB)-88- S-172
Vol 8-RC7-/67. EB-Vol 11-P-493

See also

L | 3 | U.S.C.T.

James Lee

, Co. A, 3 Reg't U. S. Col'd Inf.

Appears on

Company Descriptive Book

of the organization named above.

DESCRIPTION.

Age 40 years; height 5 feet 4 1/4 inches.

Complexion Yellow

Eyes black; hair gray

Where born Carlisle Penna

Occupation Laborer

ENLISTMENT.

When June 26, 1863

Where Phila. Pa.

By whom Lt Col Wagner, term 3 y'rs.

Remarks:

J Everson

(383y) Copyist.

J | 3 | U.S.C.T.

Lee James

Pvt., Co. A, 3 Reg't U. S. Col'd Infantry

Age 40 years.

Appears on

Company Muster-in Roll

of the organization named above. Roll dated Phila. Pa, Aug. 3, 1863.

Muster-in to date June 26, 1863.

Joined for duty and enrolled:

When June 26, 1863.*

Where Phila. Pa. *

Period 3 years.*

Remarks:

*☞ Muster-in roll shows enrollment of all men of this company as of same date and place. See enrollment on subsequent card or cards.

Book mark: See 2206-D(EB) 88

D. A. Boyd

(356c) *Copyist.*

NARA 220

L | 3 | U.S.C.T.

James Lee

Privt, Co. A. 3 Reg't U. S. Col'd Infantry.

Appears on

Company Muster Roll

for Aug. 3 to Aug. 31, 1863.

Joined for duty and enrolled:

When June 26, 186 .*

Where Phila. Pa. *

Period 3 years.*

Present or absent Present

Stoppage, $ 100 for

Due Gov't $ 100 for

Remarks: Canteen due U.S. 44 c. (age 40 yrs. Mustered in June 26/63. Phila. Pa.)

* See enrollment on card from muster-in roll.

Book mark:

J. A. Boyd
Copyist.

(358c)

G | 3 | U.S.C.T.

James Lee

Pvt., Co. A. 3 Reg't U. S. Col'd Infantry.

Appears on

Company Muster Roll

for Sept. and Oct., 1863.

Joined for duty and enrolled:

When June 26, 186 .*

Where Phila., Pa. *

Period 3 years.*

Present or absent Present

Stoppage, $ 100 for

Due Gov't $ 100 for

Remarks:

* ☞ See enrollment on card from muster-in roll.

Book mark:

S. M. Boyd

(358c) Copyist.

G | 3 | U.S.C.T.

James Lee

Pvt., Co. A. 3 Reg't U. S. Col'd Infantry.

Appears on

Company Muster Roll

for Nov. & Dec., 1863.

Joined for duty and enrolled:

When June 26, 186 .*

Where Phila. Pa. *

Period 3 years.*

Present or absent Present

Stoppage, $ 100 for

Due Gov't $ 100 for

Remarks:

* See enrollment on card from muster-in roll.

Book mark:

J. A. Boyd

(358c) Copyist.

G | 3 | U.S.C.T.

James Lee

Pvt., Co. A. 3 Reg't U. S. Col'd Infantry.

Appears on

Company Muster Roll

for Jany & Feby., 1864.

Joined for duty and enrolled:

When June 26, 1863.*

Where Phila. Pa. *

Period 3 years.*

Present or absent Absent

Stoppage, $ 100 for

Due Gov't $ 100 for

Remarks: Absent sick at Hilton Head S. C. Feby 1

* See enrollment on card from muster-in roll.

Book mark:

(358c) D. A. Boyd Copyist.

L | 3 | U.S.C.T.

James Lee

Pvt, Co. A. 3 Reg't U. S. Col'd Infantry.

Appears on

Company Muster Roll

for March & Apl., 1864.

Joined for duty and enrolled:

When June 26, 1863.*

Where Phila. Pa. *

Period 3 years.*

Present or absent Absent

Stoppage, $ 100 for

Due Gov't $ 100 for

Remarks: Absent sick.

* ☞ See enrollment on card from muster-in roll.

Book mark:

D. A. Boyd

(358c) Copyist.

L | 3 | U.S.C.T.

James Lee

Privt, Co. A. 3 Reg't U. S. Col'd Infantry.

Appears on

Company Muster Roll

for May & June, 1864.

Joined for duty and enrolled:

When June 26", 1863.*

Where Phila Pa,*

Period 3 years.*

Present or absent Absent,

Stoppage, $ 100 for

Due Gov't $ 100 for

Remarks: In Hosp. Hilton Head since Feb, 7' 1864,

* See enrollment on card from muster-in roll.

Book mark:

(358c)

Copyist.

L | 3 | U.S.C.T.

James Lee

Pvt, Co. A. 3 Reg't U. S. Col'd Infantry.

Appears on

Company Muster Roll

for July & Aug, 1864

Joined for duty and enrolled:

When June 26, 1863.*

Where Phila Pa *

Period 3 years.*

Present or absent Absent

Stoppage, $ 100 for

Due Gov't $ 100 for

Remarks: sick since Feb. 7. 1864 in Hosp. Hilton Head S. C.

* See enrollment on card from muster-in roll.

Book mark:

S. Duncan
Copyist.

(358c)

NARA 227

L. | 3 | U.S.C.T.

James Lee,

Private, Co. A. 3 Reg't U. S. Col'd Infantry.

Appears on

Company Muster Roll

for Sept. & Oct., 1864.

Joined for duty and enrolled:

When June 26, 1863.*

Where Phila., Pa.*

Period 3 years.*

Present or absent Absent.

Stoppage, $ 100 for

Due Gov't $ 100 for

Remarks: Sick in hospital Jacksonville, Fla., since Mar. 12, 1864.

* See enrollment on card from muster-in roll.

Book mark:

E. H. Woodford,
Copyist.

(358c)

L | 3 | U.S.C.T.

James Lee

Privt, Co. A. 3 Reg't U. S. Col'd Infantry.

Appears on

Company Muster Roll

for Nov. & Dec, 1864.

Joined for duty and enrolled:

When June 26, 1863.*

Where Phila. Pa.*

Period 3 years.*

Present or absent Absent.

Stoppage, $ 100 for

Due Gov't $ 100 for

Remarks: Sick Hosp. Jackson [redacted] Since March 12 '64.

* ☞ See enrollment on card from muster-in roll.

Book mark:

(358c) Copyist.

L | 3 | U.S.C.T.

James Lee

Priv't, Co. A. 3 Reg't U. S. Col'd Infantry.

Appears on

Company Muster Roll

for Jan & Feby, 1865.

Joined for duty and enrolled:

When June "6", 1863.*

Where Phila Pa.*

Period 3 years.*

Present or absent Absent.

Stoppage, $ 100 for

Due Gov't $ 100 for

Remarks: Sick on Transport bound for Hilton Head, or Beaufort S.C. March 14 1864.

* See enrollment on card from muster-in roll.

Book mark:

G M Rowe

(358c) Copyist.

NARA 230

L | 3 | U.S.C.T.

James Lee

Pvt, Co. A. 3 Reg't U. S. Col'd Infantry.

Appears on

Company Muster Roll

for March & April, 1865.

Joined for duty and enrolled:

When June 26, 1863.*

Where Phila, Pa *

Period 3 years.*

Present or absent Absent

Stoppage, $ 100 for

Due Gov't $ 100 for

Remarks: Sick on transport, bound for H. Head, S C. March 14"

* See enrollment on card from muster-in roll.

Book mark:

(358c) J. L. Norris Copyist.

L | 3 | U.S.C.T.

James D. Lee

Pvt, Co. A. 3 Reg't U. S. Col'd Infantry.

Appears on

Company Muster Roll

for May & June, 1865.

Joined for duty and enrolled:

When June 26, 1863.*

Where Phila, Pa *

Period 3 years.*

Present or absent Absent

Stoppage, $ 100 for

Due Gov't $ 100 for

Remarks: Sick on transport bound for H. Head, S. C. Mch 14. 1864.

* ☞ See enrollment on card from muster-in roll.

Book mark:

(358c) J. L. Morris Copyist.

L | 3 | U.S.C.T.

James Lee

Pvt, Co. A. 3 Reg't U. S. Col'd Infantry.

Appears on

Company Muster Roll

for July & August, 1865.

Joined for duty and enrolled:

When June 26, 1863.*

Where Phila, Pa *

Period 3 years.*

Present or absent Absent

Stoppage, $ 100 for

Due Gov't $ 100 for

Remarks: Sick on board transport bound for Hilton Head March 14, 1864

* ☞ See enrollment on card from muster-in roll.

Book mark: Dril April 4/64. E.B.U. 11. P. 483. / 97-120

J. L. Morris

(358c) Copyist.

NARA 233

L | 3 | U.S.C.T.

James Lee

Pvt, Co. A, 3 Reg't U. S. Col'd Infantry.

Appears on **Co. Muster-out Roll,** dated

Jacksonville, Fla, Oct 31, 1865.

Muster-out to date ...., 186 .

Last paid to ...., 186 .

Clothing account:

Last settled ...., 186 ; drawn since $......100

Due soldier $.........100; due U. S. $.........100

Am't for cloth'g in kind or money adv'd $.........100

Due U. S. for arms, equipments, &c., $.........100

Bounty paid $.........100; due $.........100

Remarks: Sent sick on board Transport bound for Hilton Head, S.C. March 14, 64. Missing since.

Book mark: 553/83. A.G.O. — April 12' 88, See 2206 — (over)

J. L. Norris
Copyist.

(861)

NARA 234

JAN. 19 6253543 1891

D. (E.B.) - 88.
A.G.O. Died on Hosp. Str.
Cosmopolitan Apl. 4/64
of Chronic Diarrhoea, See
B. 172, vols 5 B.C.T. 1867
& E.B. V. 11. P. 493.

NARA 235

L | 3 | U.S.C. Inf.

James Lee.

, Co A, 3 Reg't U.S.C. Inf.

NOTATION.

Book mark: 2206 — D — '88

~~Record and Pension~~ A. G. Office,

WAR DEPARTMENT,

Washington, Apl. 10, 1888.

admitted to G. H. Jacksonville, Fla, Mar. 12. '64 and was transferred Mar. 14. '64; admitted to No 15, G. H. Beaufort, S. C. Mar. 15, '64 with chronic Diarrhoea and died Apl. 6. '64. of said disease.

Egan

(438) *Copyist.*

Lee, James

Pvt. Co. A, 3 Reg't U.S.C. Inf.

4 Enclosures.

Bed Cards	Descriptive Lists
Burial Records 1	Final Statements
Certs. of Dis. for Discharge	Furloughs
C. M. Charges	Med. Des. Lists
Med. Certificates	Orders

Other papers relating to—

Admission to Hosp'l	Furlough
Casualty Sheet ~~(Officer's)~~ 1	Med. Examination
Confinement	Misc. Information
Contracts	Pay or Clothing
Death or Effects 2	Personal Reports
Desertions	Rank
Discharge from Hosp'l	Transfer to Hosp'l
Discharge from Service	Transfer to V. R. C.
Duty	Transportation

NARA 237

U. S. A. Genl Hosp[l] No 15
Beaufort S. C.

A. B. Snow Surgeon in Charge

Letter of transmittal of
Mortuary record, and
inventory of Effects of Private
James Lee. Co A. 8th Regt N. H. V. I.

8

U. S. A. Gen. Hospital No 15 —
Beaufort S. C. Apr. 6th 1864

L. Thomas Adjt. Gen. U. S.
General

It becomes my duty to inform you that James Lee, Private Co A. 8th U. S. C. Troops died in this Hospital this day of Chronic Diarrhoea
I cannot make out his final statement as I have not received his description List
I herewith transmit an inventory of his effects. also a mortuary record.

Respectfully
A. B. Crow
Surgeon Vol. Eng. and Surgeon in
charge U. S. A. Gen. Hosp No 15 —

NARA 239

[OFFICE ENDORSEMENT.]

War Department,

ADJUTANT GENERAL'S OFFICE,

November 8, 1875,

The death of James Lee Private, Co. A, Third Reg't U. S. Colored Troops, is reported as follows:

On Company Muster Rolls

From Dec 31/63 to Aug 31, 1865 "Absent sick", 186

Company Muster-out Roll.

"Sent sick on board transport bound for Hilton Head S.C. March 14th 1864 - missing since", 186

Company Descriptive Book.

........................, 186

Company Morning Reports.

........................, 186

Soldier's Final Statement.

........................, 186

Soldier's Record of Death and Interment.

........................, 186

Soldier's Inventory of Effects.

........................, 186

Soldier's Certificate of Disability for Discharge.

........................, 166

Soldier's Individual Muster-out Roll.

........................, 186

Regimental Return.

For ...., 186 , ..., 186

Regimental Quarterly Returns.

........................, 186

Regimental Descriptive Book.

........................, 186

By Surgeon General,

(Nov 22-67) "Died April 4", 1864

April 4, 1864, is held to be the correct date, and the Company ~~Muster~~ Out Rolls will be amended accordingly.

Thomas M. Vincent

C.B. 11/483.

Assistant Adjutant General.

See letter to 2d Aud. Dec. 3. 1875.

Co "A" 1864 ✓ 25 1/2

CASUALTY SHEET

No. ______

James Lee.

Pvt of Company A

3d Regiment of U.S.C.T.,

State Volunteers.

~~NATURE OF~~ CASUALTY.

Died; April 4. 1864,

Noted.

W.S.P.

Enc'd. R. of Cas.

NARA 240

CASUALTY SHEET.

Name: James Lee.

Rank: Private *Company:* A *Regiment:* 3d

Arm: U. S. C. T. *State:* -

Nature of Casualty: Death

CAUSE OF CASUALTY—(NAME OF DISEASE, &C.)

Chronic Diarrhoea

DEGREE OF DISABILITY.

BY WHOM CERTIFIED.

J. J. Woodward

A. S. U. S. A.

DATE OF DISCHARGE, DEATH, &C.

April 4th 1864.

PLACE OF DISCHARGE, DEATH, &C.

Steamer Cosmopolitan,

BY WHOM DISCHARGED.

FROM WHAT SOURCE THIS INFORMATION WAS OBTAINED.

D. 172. Vol 5. R. C. T. 1864

REMARKS.

Wm G Powers,
Clerk.

(170)

NARA 241

H. O6. S (E.B.) 78
Mortuary Record of Private
James Lee Co A, 8th Reg. U.S.C.T.

U.S.A. Gen. Hospital No 15
Beaufort S.C. Apr 6th 1864

A. B. Snow Surgeon in Charge

8

Adjt. Genl's Office.
April 10. 1886.

Accepted as referring
to James Lee. Co A.
3rd. U.S. Colored Troops.

Thomas Ward.
Asst. Adjt Genl.

1/9

Complete 9/6

Pvt James Lee
Co "A" 8" U.S. C.T.

Died April 6" 1864.

A.G.O.
No final papers can be
obtained in this case from
Medical Dept. See
S409. Vol. 4. R.C.S. 1866,
EB

Ent on d Ref. C.

NARA 242

Mortuary Record of Private James Lee Co. A. 8th Reg. U.S.C. Troops

Name of person interred	James Lee
Number and locality of grave	Lot No 14. Grave No 548 Beaufort Cemetery
Hospital No of deceased	15
Reg.t Company and rank	Private Co. A. 8th Reg. U.S.C. Troops
Residence before enlistment	
Conjugal condition and if married residence of widow	Married Mrs Elizabeth Lee Philadelphia Penn.
Cause of death	Chronic Diarrhoea
Age of deceased	50 years
Nativity	South Carolina
Reference	
Date of death and burial	April 6th 1864.

A duplicate of this record has been forwarded to the Sexton and another remains in this Hospital.

To

The Sexton of Beaufort S.C.

Sir. It becomes my duty to inform you that the person above described died at this Hospital as herein stated and that it is desired his remains should be interred with the usual military honors.

Respectfully

W. B. Shaw

Surgeon Vol. Eng. and Surgeon in Chg U.S.A. Gen'l Hosp No 15.

U.S.A. Gen'l Hosp No 15
Beaufort S.C. April 6th 1864

S 172 Vol. 5. R&P. 1867.

File

R. OF A. 2735 / 13 R.O.L.

Rec'd A.G.O. Nov 23d 1867

Surgeon General's Office,

Record and Pension Division,

November 22d, 1867.

Respectfully returned to Asst. Adjt. Genl. E. D. Pelouze, A. G. O.

Priv. James Lee, Co. A, 3d U.S. C. T. is reported on the records of this office as having died on Hosp. Str. "Cosmopolitan," April 4, 1864, of "Chronic Diarrhoea."

Noted on M O Roll

Wm B. D.

RECEIVED, ADJUTANT GENERAL'S OFFICE. NOV 23 1867

By Order of the Surgeon General:

J. J. Woodward

Brevet Lt. Col. and Asst. Surgeon, U. S. A.

J. J. S.

(50)

R. of A., Vol. 13 No. 2735

NARA 244

War Department,

ADJUTANT GENERAL'S OFFICE,

Washington, Nov 12th, 1867.

Bvt Lieut Colonel J. J. Woodward,
Assistant Surgeon. U. S. Army.
Surgeon General's Office.
Washington. D. C.

Colonel,

I have respectfully to inquire if the records of the Surgeon Generals Office furnish any evidence of the death, discharge or disposition made of Private James Lee. Co. "A" 5th U. S. Colored Troops, who is borne upon the Muster-out Roll of said Company on file in this Office as "Sent sick on board Transport bound for Hilton Head. S. C. March 14th 1864. Missing since."

(over.)

NARA 245

Very Respectfully
Your obedient servant.
L. H. Pelouze
Asst Adjutant General

NARA 248

Lee, John

Co. L, 3 U.S. Col'd Inf.

Private | Private

CARD NUMBERS.

1 6261925.	26
2 6262008.	27
3 6262043.	28
4 6262123.	29
5 6262200.	30
6 6262276.	31
7 6262419.	32
8 6263012.	33
9 9061437	34
10	35
11	36
12	37
13	38
14	39
15	40
16	41
17	42
18	43
19	44
20	45
21	46
22	47
23	48
24	49
25	50

Book Mark:

See also

HARRA 247

L | 3 | U.S.C.T.

John Lee

, Co. I, 3 Reg't U. S. Col'd Inf.

Appears on

Company Descriptive Book

of the organization named above.

DESCRIPTION.

Age 23 years; height 5 feet 8 inches.

Complexion Lt Brown

Eyes Hazel; hair Black

Where born Philadelphia Pa.

Occupation Laborer

ENLISTMENT.

When July 22", 1863

Where Phila. Pa.

By whom Lt Col. Wagner, term 3 y'rs.

Remarks: Died in Genl Hospital Jacksonville Fla. (see register of deaths)

Daggett

(383a) Copyist.

MARR 248

L | 3 | U.S.C.T.

John Lee

Priv., Co. L, 3 Reg't U. S. Col'd Infantry.

Age 23 years.

Appears on

Company Muster-in Roll

of the organization named above. Roll dated Philad^a Pa. July 26, 1863.

Muster-in to date July 22, 1863

Joined for duty and enrolled:

When July 22 1863.

Where Philadelphia Pa.

Period 3 years.

Remarks: Mustered by Capt. Sergeant U. S. A. July 22, 1863.

Book mark:

C. E. McLaughlin
Copyist.

(356)

L | 3 | U.S.C.T.

John Lee

Priv., Co. I, 3 Reg't U. S. Col'd Infantry.

Appears on

Company Muster Roll

for July 26 to Aug 31, 1863.

Present or absent Present

Stoppage, $ 100 for

Due Gov't, $ 100 for

Remarks:

Book mark:

C E McLaughlin

(256) Copyist

L | 3 | U.S.C.T.

John Lee

Corp., Co. I, 3 Reg't U. S. Col'd Infantry.

Appears on

Company Muster Roll

for Sept & Oct., 1863

Present or absent Present

Stoppage, $ 100 for

Due Gov't, $ 100 for

Remarks: Stop 1 Letter.
Promoted Oct. 25, 1863.

Book mark:

L. E. McLaughlin
Copyist

(858)

L | 3 | U.S.C.T.

John Lee

Corp., Co. I, 3 Reg't U. S. Col'd Infantry.

Appears on

Company Muster Roll

for Nov. & Dec., 1863.

Present or absent Present

Stoppage, $ 100 for

Due Gov't, $ 100 for

Remarks: Promoted Oct. 25, 1863.

Book mark:

C. E. McLaughlin

(858)

Copyist

L | 3 | U.S.C.T.

John Lee

Corp., Co. I, 3 Reg't U. S. Col'd Infantry.

Appears on

Company Muster Roll

for Jan. & Feb., 1864.

Present or absent Present

Stoppage, $ 100 for

Due Gov't, $ 100 for

Remarks:

Book mark:

C. E. McLaughlin

(358) Copyist

G | 3 | U.S.C.T.

John Lee

Corpl, Co. I, 3 Reg't U. S. Col'd Infantry.

Appears on

Company Muster Roll

for Mar & Apl, 1864.

Present or absent Present

Stoppage, $ 100 for

Due Gov't, $ 100 for

Remarks:

Book mark:

(358) Copyist

L | 3 | U.S.C.T.

John Lee

Pl, Co. I, 3 Reg't U. S. Col'd Infantry.

Appears on

Company Muster Roll

for May & June, 1864.

Present or absent

Stoppage, $ 100 for

Due Gov't, $ 100 for

Remarks: Reduced to the ranks May 3. 1864 Died in U. S. Genl Hospl. Jacksonville Fla. June 1 '64

Book mark:

D J Moore

(358) Copyist

L. | 3 | U.S.C.T.

John Lee

Pvt., Co. D, 3 Reg't U. S. Col'd Infantry.

Appears on **Co. Muster-out Roll,** dated Jacksonville Fla. Oct. 31, 1865.

Muster-out to date ....., 186 .

Last paid to Feb. 29, 1864.

Clothing account:

Last settled....., 186 ; drawn since $.....100

Due soldier $.....100; due U. S. $.....100

Am't for cloth'g in kind or money adv'd $.....100

Due U. S. for arms, equipments, &c., $.....100

Bounty paid $.....100; due $.....100

Remarks: Joined as Private. Appointed Corp. Oct. 25 1863. Died June 1. 1864 at Jacksonville, Fla. of Dysentery. Final Statement forwd.

Book mark: V. 146. P. 129. 72. - V. 117. P. 241. 70 - P. O. 23. P. 108. 71 - 975-70

N. G. White.

(361) *Copyist.*

Lee, John

Pri, Co. D, 3 Reg't U. S. C. Inf.

1 Enclosures.

Bed Cards	Descriptive Lists
Burial Records	Final Statements 1
Certs. of Dis. for Discharge	Furloughs
C. M. Charges	Med. Des. Lists
Med. Certificates	Orders

Other papers relating to—

Admission to Hosp'l	Furlough
Casualty Sheet (Officer's)	Med. Examination
Confinement	Misc. Information
Contracts	Pay or Clothing
Death or Effects	Personal Reports
Desertions	Rank
Discharge from Hosp'l	Transfer to Hosp'l
Discharge from Service	Transfer to V. R. C.
Duty	Transportation

NARA 257

A.G. Cert sent
2d Auditor

ADJUTANT GENERAL'S OFFICE
Octo 3rd 1864.
Duplicate with Inventory sent 2d Auditor.

2d Co. "I"

FINAL STATEMENT

OF

Private John Lee Co. I

3rd Reg't of U. S. C. T.

VOLUNTEERS, (A.G.O.)

Died June 2nd 1864

NOTE 1.—*Two* of these certificates (or duplicates) are to be given to each volunteer soldier who may be discharged previously to the discharge of his company, that he may at once receive from the Paymaster the pay, &c., due him, and the captain or other officer commanding the company will certify to the act of the delivery of the duplicate certificates; on these certificates the Soldier is "entitled to" his *discharge*, and should also present his discharge to the Paymaster to have the payment endorsed on it. The discharge is to be given back to the Soldier by the Paymaster; the latter only retaining as his voucher the duplicate certificates.

NOTE 2.—If the Soldier is entitled to pay for the use of his horse, the Company Commander will certify to that fact, and also to the time he has pay due for having been so mounted on his own horse.

NOTE 3.—Amounts due the Sutler and Laundress must be entered on the Muster Roll on which the death, desertion, &c., is reported, as well as on the final statement, otherwise the amount cannot be collected from the United States.

NOTE 4.— This blank will be used for deceased volunteers as well as others.

RECEIVED OCT 1 1864 ADJUTANT GEN'L'S OFFICE

Entitled to R.

[OFFICE ENDORSEMENT.]

War Department,

ADJUTANT GENERAL'S OFFICE,

.................., 187

The death of Pvt John Lee, Co. "I", Third Reg't U.S. Colored Troops, is reported as follows:

On Company Muster Roll.
For May & June, 1864, June 1st, 1864

Company Muster-out Roll.
at Jacksonville Fla June 1st, 1864

Company Descriptive Book.
June 1, 1864

Company Morning Reports.
June 1, 1864

Soldier's Final Statement.
June 2nd, 1864

Soldier's Record of Death and Interment.
.................., 186

Soldier's Inventory of Effects.
.................., 186

Soldier's Certificate of Disability for Discharge.
.................., 186

Soldier's Individual Muster-out Roll.
.................., 186

Regimental Return.
For June, 1864, May 6, 1864

Regimental Quarterly Returns. dec'd Soldiers
June 1st, 1864

Regimental Descriptive Book.
June 1, 1864

By Surgeon General.
(..........) ...., 186

June 1, 1864 is held to be the correct date, and the Company Muster Roll will be amended accordingly.

Assistant Adjutant General.

NARA 288

I certify, on honor, that John Lee a Private of Captain Charles F. Smith's Company (I) of the 3d Regiment of U S Colored Troops **VOLUNTEERS**, of the State of _____, born in Philadelphia, State of Pennsylvania, aged 23 years; 5 feet 8 inches high; Dr Brown complexion, Hazel eyes, Black hair, and by occupation a Laborer, having joined the company on its original organization at Philadelphia Pa, and enrolled in it at the muster into the service of the United States at Philadelphia Pa, on the Twenty Second day of July, 1863, (or was mustered in service as a recruit, by _____, at _____, on the _____ day of _____, 186 , to serve in the Regiment,) for the term of Three years: and having served **HONESTLY** and **FAITHFULLY** with his Company in Camp & Field to the present date, is now entitled to a **DISCHARGE** by reason of Death

(Died June 9 1864 see Inventory)

The said Private John Lee was last paid by Paymaster Maj. Lockwood to include the 29th day of February, 1864, and has pay due him from that time to the present date; he is entitled to pay and subsistence for **TRAVELING** to place of enrollment and whatever other allowances are authorized to volunteer soldiers, or militia, so discharged. He has received Sixty one $\frac{20}{100}$ dollars, advanced by the United States on account of **CLOTHING.**

There is to be stopped from him, on account of the State of _____, or other authorities for **CLOTHING**, &c., received on entering service, _____ $\frac{}{100}$ dollars; also, for expenses of SUBSISTENCE for TRAVELING from place of enrollment to the place of rendezvous, amounting to _____ $\frac{}{100}$ dollars: and on account of the United States for **EXTRA CLOTHING** received in kind from _____ and for other stoppages, viz:

_____ amounting to _____ $\frac{}{100}$ dollars; and he has been SUBSISTED for TRAVELING to his place of enrollment, up to the _____, 186 .

He is indebted to _____, **SUTLER,** _____ $\frac{}{100}$ dollars.
He is indebted to _____, **LAUNDRESS,** _____ $\frac{}{100}$ dollars.

Given in Duplicate, at Jacksonville Fla, this 21st day of September, 1864.

Charles F. Smith
Capt 3d U.S.C.T.
Commanding Company.

[A. G. O. No. 95.]

Lee Richard

Co C, 3 U.S. Col'd Inf.

Private Private

CARD NUMBERS.

1	6 2 5 4 7 7 3	26	
2	6 2 5 4 8 4 8	27	
3	6 2 5 4 8 9 8	28	
4	6 2 5 4 9 7 4	29	
5	6 2 5 5 6 5 0	30	
6	6 2 5 5 1 2 4	31	
7	6 2 5 5 2 2 7	32	
8	6 2 5 5 2 9 7	33	
9	6 2 5 5 3 6 5	34	
10	6 2 5 5 4 3 8	35	
11	6 2 5 5 5 1 3	36	
12	6 2 5 5 5 9 7	37	
13	6 2 5 5 6 9 6	38	
14	6 2 5 5 7 8 4	39	
15	6 2 5 5 8 7 1	40	
16	9 0 6 0 7 7 5	41	
17	A-126-RCY-1867	42	
18		43	
19		44	
20		45	
21		46	
22		47	
23		48	
24		49	
25		50	

Book Mark: A, 126, Vol 5, R.C.Y. 67

See also

NARA 268

S-834061-2d. and
S-942996-[redacted] a. m.

NARA 261

L 3 | U.S.C.T.

Richard Lee

, Co. C, 3 Reg't U. S. Col'd Inf.

Appears on

Company Descriptive Book

of the organization named above.

DESCRIPTION.

Age 20 years; height 6 feet 1 inches.

Complexion Blck

Eyes Blck; hair Blck

Where born Phila Penna.

Occupation Laborer

ENLISTMENT.

When July 3, 1863.

Where Phila

By whom Lt col Wagner; term 3 y'rs.

Remarks:

Henssen

(383g) Copyist.

L | 3 | U.S.C.T.

Richard Lee

Pvt., Co. b, 3 Reg't U. S. Col'd Infantry.

Age 21 years.

Appears on

Company Muster-in Roll

of the organization named above. Roll dated Philadelphia Pa, July 26, 1863.

Muster-in to date July 3, 1863.

Joined for duty and enrolled:

When July 3, 1863.*

Where Philadelphia Pa *

Period 3 years.*

Remarks:

*☞ Muster-in roll shows enrollment of all men of this company as of same date and place. See enrollment on subsequent card or cards.

Book mark:

C. S. McLaughlin

(356c) Copyist.

L | 3 | U.S.C.T.

Richard Lee

Pvt., Co. C, 3 Reg't U. S. Col'd Infantry.

Appears on

Company Muster Roll

for July 3 to Aug 31, 1863.

Joined for duty and enrolled:

When July 3, 1863.*

Where Phila. Pa. *

Period 3 years.*

Present or absent Present

Stoppage, $ 100 for

Due Gov't, $ 100 for

Remarks:

* ☞ See enrollment on card from muster-in roll.

Book mark:

C. S. McLaughlin

(358c) Copyist.

L | 3 | U.S.C.T.

Richard Lee

Corpl., Co. C, 3 Reg't U. S. Col'd Infantry.

Appears on

Company Muster Roll

for Sept & Oct, 1863.

Joined for duty and enrolled:

When July 3, 1863.*

Where Philad Pa.*

Period 3 years.*

Present or absent Present

Stoppage, $ 100 for

Due Gov't, $ 100 for

Remarks:

* ☞ See enrollment on card from muster-in roll.

Book mark:

C. M. Laughlin

(358c) Copyist.

L | 3 | U.S.C.T.

Richard Lee

Corpl, Co. C, 3 Reg't U. S. Col'd Infantry.

Appears on

Company Muster Roll

for Nov & Dec, 1863.

Joined for duty and enrolled:

When July 3, 1863.*

Where Phila Pa *

Period 3 years.*

Present or absent Present

Stoppage, $ 100 for

Due Gov't, $ 100 for

Remarks:

* ☞ See enrollment on card from muster-in roll.

Book mark:

C P McLaughlin

(358c) Copyist.

L | 3 | U.S.C.T.

Richard Lee

Corpl., Co. C, 3 Reg't U. S. Col'd Infantry.

Appears on

Company Muster Roll

for Jan & Feb, 1864

Joined for duty and enrolled:

When July 3, 1863.*

Where Phila Pa.*

Period 3 years.*

Present or absent Present

Stoppage, $ 100 for

Due Gov't, $ 100 for

Remarks:

* See enrollment on card from muster-in roll.

Book mark:

C. S. McLaughlin
Copyist.

(358c)

L | 3 | U.S.C.T.

Richard Lee

Corpl., Co. C, 3 Reg't U. S. Col'd Infantry.

Appears on

Company Muster Roll

for Mar & Apr, 1864.

Joined for duty and enrolled:

When July 3, 1863.*

Where Phila Pa.*

Period 3 years.*

Present or absent Present

Stoppage, $ 100 for

Due Gov't, $ 100 for

Remarks:

* See enrollment on card from muster-in roll.

Book mark:

C L McLaughlin
Copyist.

(358c)

L. | 3 | U.S.C.T.

Richard Lee,

Pvt., Co. C, 3 Reg't U. S. Col'd Infantry.

Appears on

Company Muster Roll

for May and June, 1864.

Joined for duty and enrolled:

When July 3d, 1863.*

Where Philadelphia,*

Period 3 years.*

Present or absent. Present.

Stoppage, $.....100 for .....

Due Gov't, $.....100 for .....

Remarks:.....

* ☞ See enrollment on card from muster-in roll.

Book mark:.....

Sharin

(358c) *Copyist.*

L. 3 U.S.C.T.

Richard Lee,

Pvt., Co. C, 3 Reg't U. S. Col'd Infantry.

Appears on

Company Muster Roll

for July and August, 1864.

Joined for duty and enrolled:

When July 3d, 1863.*

Where Phila. Pa.*

Period 3 years.*

Present or absent Present.

Stoppage, $ 100 for

Due Gov't, $ 100 for

Remarks: Free on or before April 19th. 1861.

* See enrollment on card from muster-in roll.

Book mark:

Sharin

(358c) *Copyist.*

NARA 270

L. | 3 | U.S.C.T.

Richard Lee,

Pvt., Co. C, 3 Reg't U. S. Col'd Infantry.

Appears on

Company Muster Roll

for Sept. & Oct., 1864

Joined for duty and enrolled:

When July 3d., 1863.*

Where Philadelphia, Pa. *

Period 3 years.*

Present or absent Present.

Stoppage, $ .... 100 for ....

Due Gov't, $ .... 100 for ....

Remarks: Free on or before April 19th. 1861. Paid seven dollars per month to April 30th. 1864. Back pay due.

* See enrollment on card from muster-in roll.

Book mark:

Harris.

(358c) Copyist.

L. | 3 | U.S.C.T.

Richard Lee,
Pvt., Co. C, 3 Reg't U. S. Col'd Infantry.

Appears on

Company Muster Roll

for Nov. & Dec., 1864.

Joined for duty and enrolled:

When July 3d, 1863.*

Where Philadelphia, Pa.*

Period 3 years.*

Present or absent Present.

Stoppage, $ 100 for

Due Gov't, $ 100 for

Remarks: Paid bal $7.00 per month to April 30th. 1864, Back pay due.
Free.

* See enrollment on card from muster-in roll.

Book mark:

Sharin

(358c) *Copyist.*

L. | 3 | U.S.C.T.

Richard Lee,

Pvt., Co. C, 3 Reg't U. S. Col'd Infantry.

Appears on

Company Muster Roll

for Jan. and Feb., 1865.

Joined for duty and enrolled:

When July 3d., 1863.*

Where Philadelphia, Pa.*

Period 3 years.*

Present or absent. Present.

Stoppage, $..... 100 for .....

Due Gov't, $..... 100 for .....

Remarks: Free.

* ☞ See enrollment on card from muster-in roll.

Book mark:

Sharin

(358c) *Copyist.*

L. | 3 | U.S.C.T.

Richard Lee

Pvt, Co. C, 3 Reg't U. S. Col'd Infantry.

Appears on

Company Muster Roll

for Mch & Apl, 1865.

Joined for duty and enrolled:

When 3 July, 1863.*

Where Phila. Pa.*

Period 3 years.*

Present or absent present

Stoppage, $ 29/100 for ordnance.

Due Gov't, $ 100 for

Remarks: Free

* ☞ See enrollment on card from muster-in roll.

Book mark: H. 2. D. Fla. Nov 13/65 (over.)

G. E. Dayton

(358c) *Copyist.*

JAN. 19
6255597
1891
G. O. 39

L, | 3 | U.S.C.T.

Richard Lee

Pvt, Co. C, 3 Reg't U. S. Col'd Infantry.

Appears on

Company Muster Roll

for May + June, 1865.

Joined for duty and enrolled:

When 3 July, 1863.*

Where Phila Pa.*

Period 3 years.*

Present or absent present.

Stoppage, $ 29/100 for ordnance

Due Gov't, $ 100 for

Remarks: Free

* ☞ See enrollment on card from muster-in roll.

Book mark:

G. E. Dayton

(358c) Copyist.

L. | 3 | U.S.C.T.

Richard Lee

Pvt, Co. C, 3 Reg't U. S. Col'd Infantry.

Appears on

Company Muster Roll

for July + Aug, 1865.

Joined for duty and enrolled:

When 3 July, 1863.*

Where Phila Pa.*

Period 3 years.*

Present or absent present

Stoppage, $ $\frac{}{100}$ for

Due Gov't, $ $\frac{60}{100}$ for Clg. Eq.

Remarks:

* See enrollment on card from muster-in roll.

Book mark:

G. E. Dayton

(358c) *Copyist.*

L, | 3 | U.S.C.T.

Richard Lee

Pvt, Co. C; 3 Reg't U. S. Col'd Infantry.

Appears on **Co. Muster-out Roll,** dated Jacksonville Fla. 31 Oct, 1865.

Muster-out to date ....., 186 .

Last paid to 30 June, 1865.

Clothing account:

Last settled....., 186 ; drawn since $.....100

Due soldier $.....100; due U. S. $ 7 80 100

Am't for cloth'g in kind or money adv'd $.....100

Due U. S. for arms, equipments, &c., $.....100

Bounty paid $.....100; due $ 100 100

Remarks: Promoted to Corp'l Oct 21/63. reduced to ranks June 2/64 Discharge withheld awaiting sentence G. C. M.

Book mark: A 126 Vol 5 R.C.F. 1867

G. E. Dayton

(861) Copyist.

L | 3" | U.S.C.T.

Richard Lee

, Co. C, 3" Reg't U.S.C.T.

NOTATION.

Book mark: A. 126. Rel. J. 1867

War Department,

Adjutant General's Office,

Washington, Dec. 18", *1867*

Call from

returned with report.

The above book mark was noted on rolls in order to preserve results of search in this case.

E. P. Conrazier

(475) *Copyist.*

Lee Robert H.

Co K, 3 U.S. Col'd Inf.

Private | Corporal

CARD NUMBERS.

1	6 2 6 3 0 8 0	26
2	6 2 6 3 1 5 6	27
3	6 2 6 3 2 4 0	28
4	6 2 6 3 3 2 4	29
5	6 2 6 3 4 0 0	30
6	6 2 6 3 4 7 7	31
7	6 2 6 3 5 5 2	32
8	6 2 6 3 6 2 4	33
9	6 2 6 3 6 9 6	34
10	6 2 6 3 7 6 9	35
11	6 2 6 3 8 4 7	36
12	6 2 6 3 9 3 4	37
13	6 2 6 4 0 2 6	38
14	6 2 6 4 0 7 6	39
15	9 0 6 1 5 4 6	40
16		41
17		42
18		43
19		44
20		45
21		46
22		47
23		48
24		49
25		50

Book Mark:

See also

L. | 3 | U.S.C.T.

Robert H. Lee

, Co. K., 3 Reg't U. S. Col'd Inf.

Appears on

Company Descriptive Book

of the organization named above.

DESCRIPTION.

Age 18 years; height 5 feet 5 1/2 inches.

Complexion Dark

Eyes Black; hair Black C.

Where born Philadelphia Penna,

Occupation Peddler

ENLISTMENT.

When July 23, 1863.

Where Phila. Pa,

By whom Lt Col Wagner; term 3 y'rs.

Remarks: Appointed Corporal July 20 1865 per S.O. No. 7 Reg. H. 2.

Gaggett

(383g) Copyist.

L. | 3 | U.S.C.T.

Robert H. Lee,

Pvt., Co. K, 3 Reg't U. S. Col'd Infantry.

Age 18 years.

Appears on

Company Muster-in Roll

of the organization named above. Roll dated Phila., Pa. Aug. 10, 1863.

Muster-in to date July 23, 1863

Joined for duty and enrolled:

When July 23, 1863.

Where Phila., Pa.,

Period 3 years.

Remarks:

Book mark:

Blastin

(856) Copyist.

NARA 282

L | 3 | U.S.C.T.

Robert H. Lee,

Pvt., Co. K, 3 Reg't U. S. Colored Infantry.

Appears on

Company Muster Roll

for Aug. 10 to Aug. 31, 1863.

Present or absent Present

Stoppage, $ ___ 100 for ___

Due Gov't, $ ___ 100 for ___

Remarks: Stoppage for Camp equipments $0.44.

Book mark: ___

Hastie
Copyist.

(858)

L | 3 | U.S.C.T.

Robert H. Lee,

Pvt, Co. K, 3 Reg't U. S. Colored Infantry.

Appears on

Company Muster Roll

for Sept & Oct, 1863.

Present or absent Present,

Stoppage, $ 100 for

Due Gov't, $ 100 for

Remarks:

Book mark:

Hastie

Copyist.

(358)

L | 3 | U.S.C.T.

Robert H. Lee,

Pvt., Co. K, 3 Reg't U. S. Colored Infantry.

Appears on

Company Muster Roll

for Nov. + Dec., 1863.

Present or absent Present.

Stoppage, $ 100 for

Due Gov't, $ 100 for

Remarks: Stoppage Camp Equipments $0.44

Book mark:

Hastie

Copyist.

(858)

4 | 3 | U.S.C.T.

Robert H. Lee

Pvt, Co. K, 3 Reg't U. S. Colored Infantry.

Appears on

Company Muster Roll

for Jan. & Feb, 1864.

Present or absent Present

Stoppage, $ 100 for

Due Gov't, $ 100 for

Remarks: Stop for camp equipments $2.58

Book mark:

Hastie

(358) Copyist.

L | 3 | U.S.C.T.

Robert H. Lee

Pr., Co. K, 3 Reg't U. S. Colored Infantry.

Appears on

Company Muster Roll

for Mar & Apr, 1864.

Present or absent Present

Stoppage, $ 100 for

Due Gov't, $ 100 for

Remarks:

Book mark:

Rudolph

(358)

Copyrd.

L | 3 | U.S.C.T.

Robert H. Lee

Pvt., Co. K, 3 Reg't U. S. Colored Infantry.

Appears on

Company Muster Roll

for May & June, 1864.

Present or absent Present

Stoppage, $ 100 for

Due Gov't, $ 100 for

Remarks: Due US. for wiper and screw-driver 43¢

Book mark:

Randolph

Copyist.

(358)

L | 3 | U.S.C.T.

Robert H. Lee

Pvt, Co. K, 3 Reg't U. S. Colored Infantry.

Appears on

Company Muster Roll

for July & Aug, 1864.

Present or absent Present

Stoppage, $ 100 for

Due Gov't, $ 100 for

Remarks: Free on or before Apr 19/61 Due U.S. for ordnance 93c

Book mark:

Randolph

(358) Copyist.

L | 3 | U.S.C.T.

Robert H. Lee

Pvt, Co. K, 3 Reg't U. S. Colored Infantry.

Appears on

Company Muster Roll

for Sept & Oct, 1864.

Present or absent Present

Stoppage, $ 100 for

Due Gov't, $ 100 for

Remarks: Paid $7 00 pr. mo from enlist't to Feb 29 64 back pay due

Book mark:

Randolph

Copyist.

(358)

L | 3 | U.S.C.T.

Robert H. Lee

Pr., Co. K, 3 Reg't U. S. Colored Infantry.

Appears on

Company Muster Roll

for Nov & Dec, 1864.

Present or absent Present

Stoppage, $ 100 for

Due Gov't, $ 100 for

Remarks: Paid $7 per month from enlist't to Feb 29 64 Back pay due

Book mark:

Randolph

Copyist.

(858)

L | 3 | U.S.C.T.

Robert H. Lee

Pvt., Co. K, 3 Reg't U. S. Colored Infantry.

Appears on

Company Muster Roll

for Jan & Feb, 186 5.

Present or absent Present

Stoppage, $ 100 for

Due Gov't, $ 100 for

Remarks: Paid $7.00 per month from enlist't to Feb 29/64 Back pay due

Book mark:

Randolph

(358) Copyist.

L | 3 | U.S.C.T.

Robert H. Lee

Pvt., Co. K, 3 Reg't U. S. Colored Infantry.

Appears on

Company Muster Roll

for March & April, 1865.

Present or absent Present

Stoppage, $ 100 for

Due Gov't, $ 0. 90/100 for Ordnance

Remarks: Free on or before April 19th 1861.

Book mark:

E. H. Hunter

Copyist.

(358)

L | 3 | U.S.C.T.

Robert H. Lee

Pvt., Co. K, 3 Reg't U. S. Colored Infantry.

Appears on

Company Muster Roll

for May & June, 1865.

Present or absent Present

Stoppage, $ ..... 100 for .....

Due Gov't, $ 0.90/100 for Ordnance.

Remarks: Free on or before April 19th 1861. Paid but $7.00 per month from enlistment to Feb. 29th 1864. Back pay due.

NEXT ROLL ON FILE MUSTER OUT

Book mark:

E. H. Hunter

(358) Copyist.

NARA 294

L | 3 | U.S.C.T.

Robert H. Lee

Corpl., Co. K, 3 Reg't U. S. Col'd Infantry.

Appears on **Co. Muster-out Roll**, dated

Jacksonville, Fla Oct. 31, 1865.

Muster-out to date Oct. 31, 1865.

Last paid to June 30, 1865.

Clothing account:

Last settled ...., 186 ; drawn since $......$\frac{}{100}$

Due soldier $.........$\frac{}{100}$; due U. S. $ 36 $\frac{45}{100}$

Am't for cloth'g in kind or money adv'd $......$\frac{}{100}$

Due U. S. for arms, equipments, &c., $.........$\frac{}{100}$

Bounty paid $.........$\frac{}{100}$; due $ 100 $\frac{x}{100}$

Remarks: App'd Corpl. July 20th 1865. (Joined as private)

Book mark: 10.872. 2° A. June 16th/68.

E. H. Hunter
Copyist.

(361)

Lenox Thomas

Co E, 3 U.S. Col'd Inf.

Private | Private

CARD NUMBERS.

1	6257156.	26	
2	6257236.	27	
3	6257328.	28	
4	6257409.	29	
5	6257483.	30	
6	6257566.	31	
7	6257649.	32	
8	6257732.	33	
9	6257808.	34	
10	6257890.	35	
11	6257968.	36	
12	6258046.	37	
13	6258138.	38	
14	6258231.	39	
15	6258318.	40	
16	9060986	41	
17		42	
18		43	
19		44	
20		45	
21		46	
22		47	
23		48	
24		49	
25		50	

Book Mark:

See also

S-1975-413 P.O. [illegible]

NARA 297

G | 3 | U.S.C.T.

Thomas Lenox

, Co. E, 3 Reg't U. S. Col'd Inf.

Appears on

Company Descriptive Book

of the organization named above.

DESCRIPTION.

Age 20 years; height 5 feet 9 inches.

Complexion Brown

Eyes Black; hair Black

Where born Harford, Md.

Occupation Farmer

ENLISTMENT.

When July 6th, 1863.

Where Philada Penna

By whom Col. Wagner; term 3 y'rs.

Remarks:

(383g) P. Springgutt Copyist.

L | 3 | U.S.C.T.

Thomas Lenox

Asst, Co. E, 3 Reg't U. S. Col'd Infantry.

Age 30 years.

Appears on

Company Muster-in Roll

of the organization named above. Roll dated

Phila Pa, Aug 1, 1863.

Muster-in to date July 6, 1863

Joined for duty and enrolled:

When July 6, 1863.

Where Phila Pa

Period 3 years.

Remarks:

Book mark:

S O York
Copyist.

(856)

L. | 3 | U.S.C.T.

Thomas Lenox

Pvt., Co. E, 3 Reg't U. S. Col'd Infantry.

Appears on

Company Muster Roll

for Aug. 1 to 31, 1863.

Present or absent Present.

Stoppage, $ ..... 100 for .....

.....

Due Gov't, $ ..... 100 for .....

.....

Remarks: .....

.....

.....

.....

.....

.....

.....

.....

.....

Book mark: .....

Daggett

(358) Copyist

L | 3 | U.S.C.T.

Thomas Lenox

Pvt, Co. E, 3 Reg't U. S. Col'd Infantry.

Appears on

Company Muster Roll

for Sept & Oct, 1863.

Present or absent Present

Stoppage, $ 100 for

Due Gov't, $ 100 for

Remarks: Pay stoppage for Canteen

Book mark:

S. P. York

(858) Copyist

L | 3 | U.S.C.T.

Thomas Lenox

Ariz, Co. E, 3 Reg't U. S. Col'd Infantry.

Appears on

Company Muster Roll

for Nov & Dec, 1865.

Present or absent Present

Stoppage, $ 100 for

Due Gov't, $ 100 for

Remarks: Stops for Canteen

Book mark:

S A York

Copyist

(858)

L | 3 | U.S.C.T.

Thomas Lenox

Asst., Co. E, 3 Reg't U. S. Col'd Infantry.

Appears on

Company Muster Roll

for Jany & Feby, 1864.

Present or absent Present

Stoppage, $ 100 for

Due Gov't, $ 100 for

Remarks:

Book mark:

S O York

Copyist

(858)

L | 3 | U.S.C.T.

Thomas Lenox

Priv., Co. E, 3 Reg't U. S. Col'd Infantry.

Appears on

Company Muster Roll

for March & April, 1864.

Present or absent Present

Stoppage, $ ..... 100 for .....

Due Gov't, $ ..... 100 for .....

Remarks: Stole piece Shelter Tent one wifes

Book mark: .....

(858) S. P. York Copyist

3 U.S.C.T.

Thomas Denoy

Pvt., Co. E, 3 Reg't U. S. Col'd Infantry.

Appears on

Company Muster Roll

for May & June, 1864

Present or absent Present

Stoppage; $ 100 for

Due Gov't, $ 100 for

Remarks:

Book mark:

S W Finnesy

Copyist

(858)

L | 3 | U.S.C.T.

Thomas Henry

Pvt., Co. E, 3 Reg't U. S. Col'd Infantry.

Appears on

Company Muster Roll

for July & Aug, 186 4

Present or absent Present

Stoppage, $ ..... 100 for .....

Due Gov't, $ ..... 100 for .....

Remarks: Freeman or before April 19, 1861.

Book mark: .....

S W Forrest

Copyist

(358)

G | 3 | U.S.C.T.

Thomas Lenox

Pvt., Co. E, 3 Reg't U. S. Col'd Infantry.

Appears on

Company Muster Roll

for Sept & Oct, 1864

Present or absent Present

Stoppage, $ ..... 100 for One Screw Driver

Due Gov't, $ ..... 100 for .....

Remarks: Paid $7 per Month from enlistment to April 30/64. back pay due

Book mark: .....

S W Forrest

Captain

(358)

NARA 307

L | 3 | U.S.C.T.

Thomas Lenox

Pvt., Co. E, 3 Reg't U. S. Col'd Infantry.

Appears on

Company Muster Roll

for Nov & Dec, 1864

Present or absent Present

Stoppage, $ ___ 100 for Screw driver

Due Gov't, $ ___ 100 for

Remarks: Paid $ 7 pr month from enlistment to April 30/64. back pay due

Book mark:

S W Forrest
Copyist

(858)

L | 3 | U.S.C.T.

Thomas Lenox

Pvt., Co. E, 3 Reg't U. S. Col'd Infantry.

Appears on

Company Muster Roll

for Jany & Feby, 1865.

Present or absent Present

Stoppage, $ 100 for One Spoon

dinner

Due Gov't, $ 100 for

Remarks: Paid $7. for month from enlistment to June 30/64. back pay due

Book mark:

S W Fiske

Copyist

(358)

L | 3 | U.S.C.T.

Thomas Lenox

Pvt, Co. E, 3 Reg't U. S. Col'd Infantry.

Appears on

Company Muster Roll

for March & April, 1865.

Present or absent Present

Stoppage, $ 100 for Commutation

Due Gov't, $ 100 for

Remarks: Paid $7 per mo. from enlistment to Apr 30. 64. back pay due.

Book mark:

Joseph Stewart

(858) Copyist

L | 3 | U.S.C.T.

Thomas Lowr

Pvt, Co. E, 3 Reg't U. S. Col'd Infantry.

Appears on

Company Muster Roll

for May & June, 1865.

Present or absent Present

Stoppage, $ 100 for

Due Gov't, $ 100 for

Remarks: Paid $7 per month from enlistment to Apr 30" 64. back pay due.

Book mark:

W L Houston
Copyist

(858)

L. | 3 | U.S.C.T.

Thomas Lennox

Pvt, Co. E, 3 Reg't U. S. Col'd Infantry.

Appears on

Company Muster Roll

for July & Aug, 186 5.

Present or absent absent

Stoppage, $ 100 for one letter

one No.

Due Gov't, $ 100 for

Remarks: Teamster Quarter-masters Dept Jacksonville

Book mark:

Joseph Stewart

(858) Copyist

L | 3 | U.S.C.T.

Thomas Lenox

Pvt., Co. E, 3 Reg't U. S. Col'd Infantry.

Appears on **Co. Muster-out Roll,** dated Jacksonville Fla, Oct 31, 1865.

Muster-out to date Oct 31, 1865.

Last paid to June 30, 1865.

Clothing account:

Last settled....., 186 ; drawn since $.....100

Due soldier $.....100; due U. S. $ 32 48/100

Am't for cloth'g in kind or money adv'd $.....100

Due U. S. for arms, equipments, &c., $ 6 97/100

Bounty paid $.....100; due $.....100

Remarks: Private from enlistment. Stoppage for Camp and Garrison Equipage lost. $4.52

Book mark:

Joseph Stewart

(361) *Copyist.*

Leonard Peter

Co K, 3 U.S. Col'd Inf.

Private Private

CARD NUMBERS.

1	6259565.	26	
2	6263082.	27	
3	6263158.	28	
4	6263204.	29	
5	6263284.	30	
6	6263361.	31	
7	6263479.	32	
8	6263554.	33	
9	6263626.	34	
10	6263698.	35	
11	6263771.	36	
12	6263875.	37	
13	6264171.	38	
14	9061548.	39	
15		40	
16		41	
17		42	
18		43	
19		44	
20		45	
21		46	
22		47	
23		48	
24		49	
25		50	

Book Mark:

See also

L. | 3 | U.S.C.T.

Peter Leonard

, Co. K, 3 Reg't U. S. Col'd Inf.

Appears on

Company Descriptive Book

of the organization named above.

DESCRIPTION.

Age 32 years; height 5 feet 8 inches.

Complexion Dark

Eyes Black; hair Black

Where born Winchester Va.

Occupation Barber

ENLISTMENT.

When July 18, 1863.

Where Phila. Pa.

By whom Lt Col Wagner; term 3 y'rs.

Remarks: Scar over left eye. Died of Pneumonia February 10th 1865 at Jacksonville Fla. Appointed Corporal Sept. 8th 1863 Reduced to the ranks Mar. 14th 1864

Daggett

(383g) Copyist.

L | 3 | U.S.C.T.

Peter Leonhard,

Pv, Co. K, 3 Reg't U. S. Col'd Infantry.

Age 32 years.

Appears on

Company Muster-in Roll

of the organization named above. Roll dated Phila., Pa., Aug. 10, 1863.

Muster-in to date July 18, 1863

Joined for duty and enrolled:

When July 18, 1863.

Where Phila., Pa.

Period 3 years.

Remarks: Sub.

Book mark:

Hastie.

(356) Copyist.

NARA 316

L | 3 | U.S.C.T.

Peter Leonard

Appears with rank of Pvt on

Muster and Descriptive Roll of a Detachment of Substitutes forwarded

for the 3 Reg't U. S. Col'd Inf. Roll dated

Pittsburg July 21, 1863.

Where born Winchester Va

Age 32 y'rs; occupation Barber

When enlisted July 18, 1863.

Where enlisted Pittsburg

For what period enlisted 3 years.

Eyes Blk; hair Blk

Complexion Dk; height 5 ft. 8 in.

When mustered in July 18, 1863.

Where mustered in Pittsburg

Bounty paid $ 100; due $ 100

Where credited

Company to which assigned K

Remarks: Sub for David Darr 1st Ward

Book mark:

Sands
Copyist

(339)

K | 3 | U.S.C.T.

Felix Leonard,

Pvt., Co. K, 3 Reg't U. S. Colored Infantry.

Appears on

Company Muster Roll

for Aug. 1st to Aug. 31, 1863.

Present or absent Present.

Stoppage, $.....100 for .....

Due Gov't, $.....100 for .....

Remarks: Sub.

Book mark: .....

Hastie

(358) Copyist.

K | 3 | U.S.C.T.

Peter Leonard,

Sergt., Co. K, 3 Reg't U. S. Colored Infantry.

Appears on

Company Muster Roll

for Sept. & Oct., 1863.

Present or absent Present,

Stoppage, $ 100 for

Due Gov't, $ 100 for

Remarks:

Book mark:

Hastie

(358) *Copyist.*

L | 3 | U.S.C.T.

Peter Leonard

Sgt., Co. K, 3 Reg't U. S. Colored Infantry.

Appears on

Company Muster Roll

for Nov. & Dec., 1863.

Present or absent Present

Stoppage, $ 100 for

Due Gov't, $ 100 for

Remarks: Promoted Corpl. Sept. 8, 1863, per Genl order No. 23 from Reg. Hd Qrs.

Book mark:

Hastie

(358) Copyist.

L. | 3 | U.S.C.T.

Peter Leonard,

Corp. Co. K, 3 Reg't U. S. Colored Infantry.

Appears on

Company Muster Roll

for Jan. & Feb., 1864.

Present or absent Present,

Stoppage, $ 100 for

Due Gov't, $ 100 for

Remarks: Appointed Corp. Sept. 8/63 per Gen Ord No. 23 from Reg. Hd Qrs.

Book mark:

Hastie

(358) Copyist.

L | 3 | U.S.C.T.

Peter Leonard

Pvt., Co. K, 3 Reg't U. S. Colored Infantry.

Appears on

Company Muster Roll

for Mar & Apr, 1864.

Present or absent Present

Stoppage, $ 100 for

Due Gov't, $ 100 for

Remarks: Reduced from Corp Mar 14/64 per G.O. 14 Reg H.Q.

Book mark:

Randolph

(358) Copyist.

L | 3 | U.S.C.T.

Peter Leonard

Pvt., Co. K, 3 Reg't U. S. Colored Infantry.

Appears on

Company Muster Roll

for May & June, 1864.

Present or absent Present

Stoppage, $ 100 for

Due Gov't, $ 100 for

Remarks:

Book mark:

Rudolph

(358) Copyist.

L | 3 | U.S.C.T.

Peter Leonard

Pvt., Co. K, 3 Reg't U. S. Colored Infantry.

Appears on

Company Muster Roll

for July & Aug, 1864.

Present or absent Present

Stoppage, $ 100 for

Due Gov't, $ 100 for

Remarks: Free on or before Apr 19/61

Book mark:

Randolph

(358) Copyist.

NARA 324

L | 3 | U.S.C.T.

Peter Leonard

Pri, Co. K, 3 Reg't U. S. Colored Infantry.

Appears on

Company Muster Roll

for Sept & Oct, 1864.

Present or absent Present

Stoppage, $ 100 for

Due Gov't, $ 100 for

Remarks: Due U.S. for ordnance $1.50. Paid $7.00 per month from Jul 1st '63 to Feb 29/64. Back pay due. On daily duty Company tailor.

Book mark:

Randolph

(358) Copyist.

L | 3 | U.S.C.T.

Peter Leonard

Pvt., Co. K, 3 Reg't U. S. Colored Infantry.

Appears on

Company Muster Roll

for Nov & Dec, 1864.

Present or absent Present

Stoppage, $ 100 for

Due Gov't, $ 100 for

Remarks: Paid $7 per month from enlist't to Feb 29 '64. Back pay due. On daily duty Company tailor - Due Soldier on Clothing a/c $1-05-

Book mark:

Randolph

(358) Copyist.

L | 3 | U.S.C.T.

Peter Leonard

Pvt., Co. K, 3 Reg't U. S. Colored Infantry.

Appears on

Company Muster Roll

for Jan & Feb, 186 5.

Present or absent

Stoppage, $ 100 for

Due Gov't, $ 100 for

Remarks: Died of disease at Jacksonville Fla. Feb 10 '65 Paid Gov't $7 per month from enlist't to Feb 29/64 Back pay due

Book mark: 95-461

Randolph

(858) Copyist.

NARA 327

L	3	U.S.C.T.

Peter Leonard

Pvt., Co. K, 3 Reg't U. S. Col'd Infantry.

Appears on **Co. Muster-out Roll,** dated

Jacksonville, Fla., Oct. 31, 1865.

Muster-out to date ...., 186 .

Last paid to Aug. 31, 1864.

Clothing account:

Last settled ...., 186 ; drawn since $......$\frac{}{100}$

Due soldier $..........$\frac{}{100}$; due U. S. $..........$\frac{}{100}$

Am't for cloth'g in kind or money adv'd $......$\frac{}{100}$

Due U. S. for arms, equipments, &c., $..........$\frac{}{100}$

Bounty paid $..........$\frac{}{100}$; due $..........$\frac{}{100}$

Remarks: Died at Jacksonville, Fla. Feb. 10th 1865. Final statements and Inventory of effects forwarded Feb. 15th 1865.

Book mark: 95.461. H. B.V. V. 140. P. 148.72

E. H. Hunter
Copyist.

(361)

Leonard, Peter

Pri, Co. K, 3 Reg't U. S. C. Inf.

1 Enclosures.

Bed Cards	Descriptive Lists
Burial Records	Final Statements 1
Certs. of Dis. for Discharge	Furloughs
C. M. Charges	Med. Des. Lists
Med. Certificates	Orders

Other papers relating to—

Admission to Hosp'l	Furlough
Casualty Sheet (Officer's)	Med. Examination
Confinement	Misc. Information
Contracts	Pay or Clothing
Death or Effects	Personal Reports
Desertions	Rank
Discharge from Hosp'l	Transfer to Hosp'l
Discharge from Service	Transfer to V. R. C.
Duty	Transportation

A. G. O. July 29. 1865.
Pro. of C. of A. & P. M. recd,
for $15, 85, sent 2d Auditor.
J. D.

ADJUTANT GENERAL'S OFFICE.
Mch 3" 1865.
Duplicate with Inventory sent 2d Auditor.

5 Co. K. ✓

FINAL STATEMENT

17, OF

Peter Leonard Co. K

3d Reg't of U. S. C. Troops

7 US

VOLUNTEERS.

Died Feby 8" 1865.

NOTE 1.—*Two* of these certificates (or duplicates) are to be given to each Volunteer Soldier or drafted man who may be discharged previously to the discharge of his company, that he may at once receive from the Paymaster the pay, &c., due him, and the captain or other COMMISSIONED officer commanding the company will certify to the act of the delivery of the duplicate certificates; on these certificates the Soldier is "entitled to" his *discharge*, and should also present his discharge to the Paymaster to have the payment endorsed on it. The discharge is to be given back to the Soldier by the Paymaster; the latter only retaining as his voucher the duplicate certificates.

NOTE 2.—If the Soldier is entitled to pay for the use of his horse, the Company Commander will certify to that fact on the back of both these final statements, and also to the time he has pay due for having been so mounted on his own horse.

NOTE 3.—When a Soldier is furnished with final statements, his descriptive list, if he has one, should be taken up by the officer who gives the Soldier these statements, and endorsed with a statement to this effect by the officer. This endorsement should exhibit a full statement of the time for which the Soldier was allowed pay on his final statements, the clothing account, and all other charges against him or in his favor, so as to comprise a complete exhibit of his account. It will then be transmitted to the company commander of the Soldier, who will enter all the data necessary to a full understanding of the Soldier's account on the muster roll upon which the Soldier's discharge is reported. The descriptive list will then be destroyed. The object of this is, that the remaining portion of the Soldier's account may be settled upon the receipt of these muster rolls, and the Soldier receive any pay or allowances that may be due him at the time of his discharge, and which may not appear on his final statements from the fact that his descriptive list is incomplete. These accounts for back pay, &c., are settled by the 2d Auditor of the Treasury Department.

NOTE 4.—Charges for loss or injury to ordnance, horse equipments, and other miscellaneous charges, should appear under the heading of "Other Stoppages."

NOTE 5.—Bounty paid by State authorities, and not by the United States, will not be entered on this statement.

NOTE 6.—Amounts due the Sutler and Laundress must be entered on the muster roll on which the discharge, death, desertion, &c., is reported, as well as on the final statement, otherwise the amount cannot be collected from the United States.

NOTE 7.—This blank will be used for deceased volunteers and drafted men, as well as for others.

NOTE 8.—Where a Soldier dies in Hospital or on detached service, his descriptive list, if he has one, should be sent with his final statements, in duplicate, to the Adjutant General, Washington, D. C.

Entd. on R. S.

ADJUTANT GEN'LS. OFFICE 1865

[OFFICE ENDORSEMENT.]

War Department,

ADJUTANT GENERAL'S OFFICE,

........................, 187

The death of Pvt Peter Leonard, Co. K, 3rd Reg't U.S. Colored Troops, is reported as follows:

On Company Muster Roll,
For Jany & Feby 1865, Feby 10, 1865

Company Muster-out Roll.
At Jacksonville Fla Feby 10, 1865

✓ Company Descriptive Book.
February 10, 1865.

✓ Company Morning Reports.
February 10, 1865.

Soldier's Final Statement.
Feby 8th, 1865

Soldier's Record of Death and Interment.
........................, 186

Soldier's Inventory of Effects.
........................, 186

Soldier's Certificate of Disability for Discharge.
........................, 186

Soldier's Individual Muster-out Roll.
........................, 186

Regimental Return.
For Feby, 1865, Feby 10, 1865

Regimental Quarterly Returns. Dec'd Soldiers
Feby 10, 1865

✓ Regimental Descriptive Book.
No record, 186

By Surgeon General.
(........................), 186

Feby 10, 1865, is held to be the correct date, ~~and the~~ Company Muster Roll will be amended accordingly.

Assistant Adjutant General.

NARA 338

I certify, on honor, that Peter Leonard a Private of Captain A C Wells Company (K) of the 3d Regiment of U S C Troops VOLUNTEERS, ~~of the State of~~ —, born in Winchester, State of Virginia, aged 32 years; 5 feet 8 inches high; Black complexion, Black eyes, Black hair, and by occupation a Barber, having joined the company on its original organization at Phila Pa, and enrolled in it at the muster into the service of the United States at Phila Pa, on the 18th day of July, 1863, (or was mustered in service as a recruit, by ......, at ......, on the ...... day of ......, 186 , or was drafted and mustered into the service of the United States from the ...... Enrollment District of the State of ......, at ......, on the ...... day of ......, 186 ,) to serve in the Regiment, for the term of Three Years: and having served HONESTLY and FAITHFULLY with his Company in The Field to the present date, is now entitled to a **DISCHARGE** by reason of Death

The said Peter Leonard was last paid by Paymaster Maj J C Dewey to include the 31st day of August, 1864, and has pay due him from that time to the present date; he is entitled to pay and subsistence for TRAVELING to place of enrollment, and whatever other allowances are authorized to volunteer soldiers, drafted men, or militia, so discharged. He has received from the United States CLOTHING amounting to 13 84/100 dollars, since the 18th day of July, 1864, when his clothing account was last settled. He has received from the United States ...... /100 dollars advanced BOUNTY.

There is to be stopped from him, on account of the State of ......, or other authorities, for CLOTHING, &c., received on entering service, ... /100 dollars; and for other stoppages, viz: ...... /100 dollars.

He has been furnished with TRANSPORTATION in kind from the place of his discharge to ......; and he has been SUBSISTED for TRAVELING to his place of enrollment, up to the ......, 186 .

He is indebted to Mark Tomlinson SUTLER, 10 00/100 dollars.

He is indebted to ......, LAUNDRESS, ... /100 dollars.

Given in Duplicate, at Jacksonville Fla, this 14th day of February, 1865

C W Brown
1st Lt 3d USCT
Commanding Company.

[A. G. O. No. 95—First.]

(A.G.O. Circ. 8 Feb 1875)
see Circ. ...

Free before April 19/61. He was paid bounty of $10 per month from Enlistment to Feb 29th 1864. Back pay due

Lewell, Isaac

Co G, 3 U.S. Col'd Inf.

Private Private

CARD NUMBERS.

1	62595-96.	26	
2	62596 73.	27	
3	62597 5-6.	28	
4	62 59835.	29	
5	62 59912.	30	
6	62 59995.	31	
7	62600 74.	32	
8	62601 54.	33	
9	62600230	34	
10	62603 09.	35	
11	62603 86.	36	
12	62604 72.	37	
13	62605 64.	38	
14	62606 46.	39	
15	90001 246	40	
16		41	
17		42	
18		43	
19		44	
20		45	
21		46	
22		47	
23		48	
24		49	
25		50	

Book Mark:

See also

G | 3 | U.S.C.T.

Isaac ~~Sewell~~ Lewell x

....., Co. G., 3 Reg't U. S. Col'd Inf.

Appears on

Company Descriptive Book

of the organization named above.

DESCRIPTION.

Age 24 years; height 6 feet ..... inches.

Complexion Black

Eyes Black; hair Black

Where born Baltimore Md.

Occupation Stevedore

ENLISTMENT.

When July 13, 1863.

Where Phila. Penna.

By whom Lt Col Wagner, term 3 y'rs.

Remarks:

x Corrected by William

Daggett

(383g) Copyist.

S | 3 | U.S.C.T.

Isaac Lewell

Pvt, Co. G, 3 Reg't U. S. Col'd Infantry.

Age 22 years.

Appears on

Company Muster-in Roll

of the organization named above. Roll dated Philad^a Pa, July 25, 1863.

Muster-in to date July 13, 1863

Joined for duty and enrolled:

When July 13, 1863.

Where Philadelphia, Pa

Period 3 years.

Remarks:

Book mark:

(856) Copyist.

L | 3 | U.S.C.T.

Isaac Lewell

Pvt, Co. G, 3 Reg't U. S. Col'd Infantry.

Appears on

Company Muster Roll

for July 13/63 to Aug 31, 1863.

Present or absent Present

Stoppage, $ 100 for

Due Gov't, $ 100 for

Remarks:

Book mark:

(858) Copyist

L | 3 | U.S.C.T.

Isaac Lewell

Pvt, Co. G, 3 Reg't U. S. Col'd Infantry.

Appears on

Company Muster Roll

for Sept & Oct, 1863.

Present or absent Present

Stoppage, $ 100 for

Due Gov't, $ 100 for

Remarks:

Book mark:

W S Rose

(858) Copyist

L | 3 | U.S.C.T.

Isaac Lewell

Pvt, Co. G, 3 Reg't U. S. Col'd Infantry.

Appears on

Company Muster Roll

for Nov & Dec, 1863.

Present or absent Present

Stoppage, $ 100 for

Due Gov't, $ 100 for

Remarks:

Book mark:

(858) Copyist

L | 3 | U.S.C.T.

Isaac Lewell

Pvt, Co. G, 3 Reg't U. S. Col'd Infantry.

Appears on

Company Muster Roll

for Jan & Feb, 1864.

Present or absent Present

Stoppage, $ 100 for

Due Gov't, $ 100 for

Remarks:

Book mark:

W J Rose

(858) Copyist

L | 3 | U.S.C.T.

Isaac Lewell

Pvt., Co. G, 3 Reg't U. S. Col'd Infantry.

Appears on

Company Muster Roll

for Mch. & Apl., 1864.

Present or absent Present

Stoppage, $ 100 for

Due Gov't, $ 100 for

Remarks:

Book mark:

Randall

Copyist

(858)

L | 3 | U.S.C.T.

Isaac Lewel

Pvt, Co. G, 3 Reg't U. S. Col'd Infantry.

Appears on

Company Muster Roll

for May & June, 1864.

Present or absent Present

Stoppage, $ 100 for

Due Gov't, $ 100 for

Remarks:

Book mark:

Standard

Copyist

(858)

NARA 340

L | 3 | U.S.C.T.

Isaac Levell

~~Private,~~ Co. G, 3 Reg't U. S. Col'd Infantry.

Appears on

Company Muster Roll

for July and August, 1864.

Present or absent Present.

Stoppage, $ 100 for

Due Gov't, $ 100 for

Remarks: Free on or before ~~Feby~~ Apr. 19, 1861.

[1] As it appears on Roll.

Book mark:

Keeper.

(858) Copyist

L | 3 | U.S.C.T.

Isaac Lewell

Pri, Co. G, 3 Reg't U. S. Col'd Infantry.

Appears on

Company Muster Roll

for Sept + Oct, 1864.

Present or absent Present

Stoppage, $ 100 for

Due Gov't, $ 100 for

Remarks: Free on or before Apr 19-1861 Paid but $7. per month from date of enlistment to Feb 28-1864 Back pay due

Book mark:

C C Parker

(858) Copyist

L | 3 | U.S.C.T.

Isaac Lewel

Pvt., Co. G, 3 Reg't U. S. Col'd Infantry.

Appears on

Company Muster Roll

for Nov. & Dec., 1864.

Present or absent Present

Stoppage, $ 100 for

Due Gov't, $ 100 for

Remarks: Free, on or before April 19th 1861. Paid but $7. per Mo. from date of Enlistment to Feb. 29th 1864, Back pay due. Stop for Wiper, 1/2 Shelter tent.

Book mark:

Randall

(858) Copyist

L | 3 | U.S.C.T.

Isaac Lewell

Pvt., Co. G, 3 Reg't U. S. Col'd Infantry.

Appears on

Company Muster Roll

for Jan. & Feb., 1865.

Present or absent Present

Stoppage, $ 100 for

Due Gov't, $ 100 for

Remarks: Free, on or before April 19th 1861. Paid but $7. per Mo. from date of Enlistment, to Feb. 29th 1864. Back pay due.

Book mark:

Rainsdale

(858) Copyist

L | 3 | U.S.C.T.

Isaac Tewell.

Priv., Co. G, 3 Reg't U. S. Col'd Infantry.

Appears on

Company Muster Roll

for Mch & Apr., 1865.

Present or absent Present

Stoppage, $ 100 for

Due Gov't, $ 100 for

Remarks: Paid but $7 per month from date of enlistment to Feb 29, 1864. Back pay due. Stop for wipes, ½ shelter tent. Free April 19, 1861.

Book mark:

Sandy

(858) Copyist

L | 5 | U.S.C.T.

Isaac Lewell

Pvt., Co. G, 3 Reg't U. S. Col'd Infantry.

Appears on

Company Muster Roll

for May and June, 1865.

Present or absent Present

Stoppage, $ 100 for

Due Gov't, $ 100 for

Remarks: Free. Paid but $7 per mo. from date of Enlistment to Feb. 29, 1864. Back pay due. Stop wiper ½ Shelter Tent.

NEXT ROLL ON FILE MUSTER OUT.

Book mark:

Leary

Copyist

(858)

NARA 346

S. | 3 | U.S.C.T.

Isaac Lewell

Pri, Co. G, 3 Reg't U. S. Col'd Infantry.

Appears on **Co. Muster-out Roll,** dated

Jacksonville Fla, Oct. 31, 1865.

Muster-out to date Oct. 31, 1865.

Last paid to June 30, 1865.

Clothing account:

Last settled ...., 186 ; drawn since $......$\frac{}{100}$

Due soldier $ 3 $\frac{17}{100}$; due U. S. $......$\frac{}{100}$

Am't for cloth'g in kind or money adv'd $......$\frac{}{100}$

Due U. S. for arms, equipments, &c., $......$\frac{}{100}$

Bounty paid $......$\frac{}{100}$; due $ 100 $\frac{}{100}$

Remarks: Stop. for Ordnance $6.00. Private from enlistment.

Book mark: ....

J. J. Stearns
Copyist.

(361)

NARA 347

125

Lewis Charles

Co. B, 3 U.S. Col'd Inf.

Private | Private

CARD NUMBERS.

1	6253599	26	
2	6253682	27	
3	6253763	28	
4	6253846	29	
5	6253928	30	
6	6254007	31	
7	6254083	32	
8	6254161	33	
9	6254239	34	
10	6254318	35	
11	6254397	36	
12	6254483	37	
13	6254611	38	
14	6254712	39	
15	9060685	40	
16		41	
17		42	
18		43	
19		44	
20		45	
21		46	
22		47	
23		48	
24		49	
25		50	

Book Mark:

See also

NARA 348

L | 3 | U.S.C.T.

Charles Lewis

, Co. B, 3 Reg't U. S. Col'd Inf.

Appears on

Company Descriptive Book

of the organization named above.

DESCRIPTION.

Age 28 years; height 5 feet 6 inches.

Complexion Black

Eyes Black; hair Black

Where born Camden Co N.J.

Occupation Labour

ENLISTMENT.

When June 30, 1863.

Where Philadelphia

By whom Lt Col Wagner; term 3 y'rs.

Remarks:

Henzten

Copyist.

(383g)

L. | 3 | U.S.C.T.

Charles Lewis

Priv, Co. B, 3 Reg't U. S. Col'd Infantry.

Age 28 years.

Appears on

Company Muster-in Roll

of the organization named above. Roll dated Phil, Pa, Aug 7, 1863.

Muster-in to date June 30, 1863.

Joined for duty and enrolled:

When June 30, 1863.*

Where Phil, Pa,*

Period 3 years.*

Remarks:

*☞ Muster-in roll shows enrollment of all men of this company as of same date and place. See enrollment on subsequent card or cards.

Book mark:

Martin

(356c) Copyist.

L. | 3 | U.S.C.T.

Charles Lewis

Priv., Co. B, 3 Reg't U. S. Col'd Infantry.

Appears on

Company Muster Roll

for July & Aug, 1863.

Joined for duty and enrolled:

When June 30, 1863.*

Where Phil. Pa. *

Period 3 years.*

Present or absent Present.

Stoppage, $ 100 for

Due Gov't $ 100 for

Remarks:

* ☞ See enrollment on card from muster-in roll.

Book mark:

Martin

(358c) *Copyist.*

L. | 3 | U.S.C.T.

Charles Lewis

Priv., Co. B, 3 Reg't U. S. Col'd Infantry.

Appears on

Company Muster Roll

for Sept & Oct., 1863.

Joined for duty and enrolled:

When June 30., 1863.*

Where Phil., Pa.,*

Period 3 years.*

Present or absent Present.

Stoppage, $ 100 for

Due Gov't $ 100 for

Remarks:

* ☞ See enrollment on card from muster-in roll.

Book mark:

Martin

(358c) Copyist.

L. | 3 | U.S.C.T.

Charles Lewis

Priv., Co. B, 3 Reg't U. S. Col'd Infantry.

Appears on

Company Muster Roll

for Nov. & Dec., 1863.

Joined for duty and enrolled:

When June 30, 1863.*

Where Phil., Pa.,*

Period 3 years.*

Present or absent Present.

Stoppage, $ 100 for

Due Gov't $ 100 for

Remarks:

* See enrollment on card from muster-in roll.

Book mark:

Martin

(858c) Copyist.

L. | 3 | U.S.C.T.

Charles Lewis

Pvt., Co. B, 3 Reg't U. S. Col'd Infantry.

Appears on

Company Muster Roll

for Jan & Feb, 1864.

Joined for duty and enrolled:

When June 30, 1863.*

Where Phil. Pa.*

Period 3 years.*

Present or absent Present

Stoppage, $ 100 for

Due Gov't $ 100 for

Remarks:

* ☞ See enrollment on card from muster-in roll.

Book mark:

Martin

(358c) Copyist.

L | 3 | U.S.C.T.

Charles Lewis

Pvt., Co. B, 3 Reg't U. S. Col'd Infantry.

Appears on

Company Muster Roll

for Mar & Apr, 1864.

Joined for duty and enrolled:

When June 30, 1863.*

Where Philadelphia Pa *

Period 3 years.*

Present or absent Present

Stoppage, $ 100 for

Due Gov't, $ 100 for

Remarks: Stop for 1 Mipes

* See enrollment on card from muster-in roll.

Book mark:

J. M. Farley

(358c) Copyist.

L | 3 | U.S.C.T.

Charles Lewis

Priv., Co. B, 3 Reg't U. S. Col'd Infantry.

Appears on

Company Muster Roll

for May & June, 1864.

Joined for duty and enrolled:

When June 30, 1863.*

Where Philad. Pa *

Period 3 years.*

Present or absent Present

Stoppage, $ 100 for

Due Gov't, $ 100 for

Remarks:

* ☞ See enrollment on card from muster-in roll.

Book mark:

Washington

(358c) Copyist.

L | 3 | U.S.C.T.

Charles Lewis

Priv., Co. B, 3 Reg't U. S. Col'd Infantry.

Appears on

Company Muster Roll

for May June July & Aug, 1864.

Joined for duty and enrolled:

When June 30, 1863.*

Where Philad. Pa *

Period 3 years.*

Present or absent Present

Stoppage, $ 100 for

Due Gov't $ 100 for

Remarks: Free on or before April 19th 1861.

* ☞ See enrollment on card from muster-in roll.

Book mark:

Washington

(358c) Copyist.

NARA 357

L | 3 | U.S.C.T.

Charles Lewis

Priv, Co. B, 3 Reg't U. S. Col'd Infantry.

Appears on

Company Muster Roll

for Sept. & Oct, 1864.

Joined for duty and enrolled:

When June 30, 1863.*

Where Phila^d Pa *

Period 3 years.*

Present or absent Present

Stoppage, $ 100 for

Due Gov't $ 100 for

Remarks: Free on or before April 19th 1861 - Due soldier dif^c pay ($6 per Mo.) from June 27th/63 to Apr. 30th/64

* See enrollment on card from muster-in roll.

Book mark:

(358c) Washington

Copyist.

NARA 358

L	3	U.S.C.T.

Charles Lewis

Priv, Co. B, 3 Reg't U. S. Col'd Infantry.

Appears on

Company Muster Roll

for Sept. Oct. Nov. & Dec, 1864.

Joined for duty and enrolled:

When June 30, 1863*

Where Phila^d Pa *

Period 3 years.*

Present or absent Present

Stoppage, $ 100 for

Due Gov't $ 100 for

Remarks: Free on or before April 19" 1861. Stop for 1 Canteen, due soldier dif pay $6 per mo from June 29" 1863. to Apl. 30" 1864

* See enrollment on card from muster-in roll.

Book mark:

Wauling [illegible]
Copyist.

(358c)

L | 3 | U.S.C.T.

Charles Lewis

Pvt, Co. B, 3 Reg't U. S. Col'd Infantry.

Appears on

Company Muster Roll

for from Aug 31/64 to Feb 28, 1865.

Joined for duty and enrolled:

When June 3d, 1863.*

Where Phila Pa *

Period 3 years.*

Present or absent Present

Stoppage, $ 100 for

Due Gov't $ 100 for

Remarks: Joined on or before April 19th 1861. Stop for 1 canteen Due soldier diff pay $6 per mo from Enrolment to Apr. 30 1864

* ☞ See enrollment on card from muster-in roll.

Book mark:

Washington

(358c) Copyist.

L | 3 | U.S.C.T.

Charles Lewis

Pvt, Co. B, 3 Reg't U. S. Col'd Infantry.

Appears on

Company Muster Roll

for Mch & Apl, 1865.

Joined ~~for duty~~ and enrolled:

When June 30, 1863*

Where Philadp Pa *

Period 3 years.*

Present or absent Not Stated

Stoppage, $ 100 for canteen

Due Gov't, $ 100 for

Remarks: Free on or before Apl 19/61. Due Soldier diff pay $6 per mo. from enrollment to Apl 30, 1864

* See enrollment on card from muster-in roll.

Book mark:

M. M. Jackson

Copyist.

(358c)

L | 3 | U.S.C.T.

Charles Lewis

Pvt., Co. B, 3 Reg't U. S. Col'd Infantry.

Appears on

Company Muster Roll

for May and June, 1863.

Joined for duty and enrolled:

When June 30, 1863.*

Where Phila. Pa. *

Period 3 years.*

Present or absent

Stoppage, $ 100 for

Due Gov't $ 100 for

Remarks: Due soldier dif. pay $6 per mo. from enrollment to April 30, 64. Died in Post Hospital Jacksonville Fla. May 1st 1863.

NEXT ROLL ON FILE MUSTER OUT.

* ☞ See enrollment on card from muster-in roll.

Book mark:

Calloway.

(358c) Copyist.

NARA 362

L | 3 | U. S. C. T.

Charles Lewis

Pri, Co. B, 3 Reg't U. S. Col'd Inf.

Appears on **Co. Muster-out Roll**, dated

Jacksonville, Fla Oct. 31, 1865.

Muster-out to date ____, 186 .

Last paid to ____, 186 .

Clothing account:

Last settled ____, 186 ; drawn since $____ 100

Due soldier $____ 100; due U. S. $____ 100

Am't for cloth'g in kind or money adv'd $____ 100

Due U. S. for arms, equipments, &c., $____ 100

Bounty paid $____ 100 due $____ 100

Remarks: Enrolled as private Died at Jacksonville, Fla, May 1, '63. Final statement given.

Book mark; ~~4T~~. 918. 115,859
(Over)

W. M. Jackson
(861) Copyist.

JAN. 19 6254712 ☆1891☆

V249. P7077.

Lewis, Charles

Pri., Co. B, 3 Reg't U.S.C. Inf.

1 Enclosures.

Bed Cards	Descriptive Lists
Burial Records	Final Statements 1
Certs. of Dis. for Discharge	Furloughs
C. M. Charges	Med. Des. Lists
Med. Certificates	Orders

Other papers relating to—

Admission to Hosp'l	Furlough
Casualty Sheet (Officer's)	Med. Examination
Confinement	Misc. Information
Contracts	Pay or Clothing
Death or Effects	Personal Reports
Desertions	Rank
Discharge from Hosp'l	Transfer to Hosp'l
Discharge from Service	Transfer to V. R. C.
Duty	Transportation

NARA 365

A.G.O. Aug. 24, 1865.
Pro. of C. of Ad & P. M. rec't,
for $11, 50 sent 2d Auditor,
Jo.

ADJUTANT GENERAL'S OFFICE
May 20th 1865
Duplicate with Inventory sent 2d Auditor.

18. Co. B

FINAL STATEMENT

OF

Private Chas. Lewis

3d Reg't of U.S.C. Troops

VOLUNTEERS.

Died May 1st 1865.

NOTE 1.—*Two* of these certificates (or duplicates) are to be given to each volunteer soldier who may be discharged previously to the discharge of his company, that he may at once receive from the Paymaster the pay, &c., due him, and the captain or other officer commanding the company will certify to the act of the delivery of the duplicate certificates; on these certificates the Soldier is "entitled to" his *discharge*, and should also present his discharge to the Paymaster to have the payment endorsed on it. The discharge is to be given back to the Soldier by the Paymaster; the latter only retaining as his voucher the duplicate certificates.

NOTE 2.—If the Soldier is entitled to pay for the use of his horse, the Company Commander will certify to that fact, and also to the time he has pay due for having been so mounted on his own horse.

NOTE 3.—Amounts due the Sutler and Laundress must be entered on the Muster Roll on which the death, desertion, &c., is reported, as well as on the final statement, otherwise the amount cannot be collected from the United States.

NOTE 4.—This blank will be used for deceased volunteers as well as others.

Entd on O. Rol. C.

NARA 36C

I certify, on honor, that Charles Lewis a Private of Captain F.M. Coles Company (B) of the 3d Regiment of U.S.C. Troops **VOLUNTEERS**, of the State of ——, born in Camden County State of New Jersey, aged 28 years; 5 feet 6 inches high; Black complexion, Blk eyes, Blk hair, and by occupation a Laborer, having joined the company on its original organization at Philadelphia Pa and enrolled in it at the muster into the service of the United States at Philadelphia Pa on the 30th day of June, 1863, (or was mustered in service as a recruit, by ——, at ——, on the —— day of ——, 186 , to serve in the Regiment,) for the term of Three Years: and having served **HONESTLY** and **FAITHFULLY** with his Company in The Field to the present date, is now entitled to a **DISCHARGE** by reason of Death

The said Charles Lewis was last paid by Paymaster Maj Dewey to include the 31st day of August, 1864, and has pay due him from that time to the present date; he is entitled to pay and subsistence for **TRAVELING** to place of enrollment and whatever other allowances are authorized to volunteer soldiers, or militia, so discharged. He has received Thirty four and 86/100 dollars, advanced by the United States on account of **CLOTHING.** due soldier difference of Pay 6.00 per mo from enrollment to apl 30th 1864 Three on or before apl 19th 1861

There is to be stopped from him, on account of the State of ——, or other authorities for **CLOTHING**, &c., received on entering service, ——/100 dollars; also, for expenses of SUBSISTENCE for TRAVELING from place of enrollment to the place of rendezvous, amounting to ——/100 dollars: and on account of the United States for **EXTRA CLOTHING** received in kind from —— and for other stoppages, viz: Canteen ——, amounting to ——/100 dollars; and he has been SUBSISTED for TRAVELING to his place of enrollment, up to the ——, 186 .

He is indebted to Mark Tomlinson, **SUTLER**, Twenty three 50/100 dollars.

He is indebted to ——, **LAUNDRESS**, ——/100 dollars.

Given in Duplicate, at Jacksonville Fla, this 1st day of May, 1865.

F.M. Coles
Capt Co B 3d U.S.C. Troops
Commanding Company.

[A. G. O. No. 95.]

Lewis Charles

Co. E, 3 U.S. Col'd Inf.

Private | Private

CARD NUMBERS.

1	6257189.	26	
2	6257239.	27	
3	6257326.	28	
4	6257407.	29	
5	6257482.	30	
6	6257567.	31	
7	6257650.	32	
8	6257733.	33	
9	6257809.	34	
10	6257891.	35	
11	6257971.	36	
12	6258049.	37	
13	6258141.	38	
14	6258234.	39	
15	6258321.	40	
16	9061027	41	
17		42	
18		43	
19		44	
20		45	
21		46	
22		47	
23		48	
24		49	
25		50	

Book Mark:

See also

NARA 368

L.	3	U.S.C.T.

Charles Lewis

........, Co. E, 3 Reg't U. S. Col'd Inf.

Appears on

Company Descriptive Book

of the organization named above.

DESCRIPTION.

Age 19 years; height — feet — inches.

Complexion Black.

Eyes Black; hair Black.

Where born Chester, Penna.

Occupation Laborer.

ENLISTMENT.

When July 26th, 1863.

Where Philada Penna.

By whom Lt Col. Wagner; term 3 y'rs.

Remarks:

(383c) R. Springfield Copyist.

L | 3 | **U.S.C.T.**

Charles Lewis

Priv., Co. E, 3 Reg't U. S. Col'd Inf.

Age 19 years.

Appears on

Company Muster-in Roll

of the organization named above. Roll dated Phila Pa, Aug 1, 1863.

Muster-in to date July 26 1863.

Joined for duty and enrolled:

When July 26, 1863.

Where Phila Pa

Period 3 years.

Remarks:

Book mark:

S. O. York

(356) Copyist.

L. | 3 | U.S.C.T.

Charles N. Lewis

Pvt., Co. E, 3 Reg't U. S. Col'd Infantry.

Appears on

Company Muster Roll

for Aug. 1 to 31, 1863.

Present or absent Present

Stoppage, $ 100 for

Due Gov't, $ 100 for

Remarks:

Book mark:

Daggett

(858) Copyist

NARA 371

L | 3 | U.S.C.T.

Charles Lewis

Pvt., Co. E, 3 Reg't U. S. Col'd Infantry.

Appears on

Company Muster Roll

for Sept & Oct, 1863.

Present or absent Present

Stoppage, $ 100 for

Due Gov't, $ 100 for

Remarks:

Book mark:

S. P. York

(358) Copyist

L | 3 | U.S.C.T.

Charles Lewis

Ariz, Co. E, 3 Reg't U. S. Col'd Infantry.

Appears on

Company Muster Roll

for Nov & Dec, 1863.

Present or absent Present

Stoppage, $ 100 for

Due Gov't, $ 100 for

Remarks:

Book mark:

S. P. York

(358) Copyist

L | 3 | U.S.C.T.

Charles Lewis

Ass't, Co. E, 3 Reg't U. S. Col'd Infantry.

Appears on

Company Muster Roll

for Jany & Feby, 1864.

Present or absent Present

Stoppage, $ 100 for

Due Gov't, $ 100 for

Remarks:

Book mark:

S. O. York

(358) Copyist

L | 3 | U.S.C.T.

Charles Lewis

Priv., Co. E, 3 Reg't U. S. Col'd Infantry.

Appears on

Company Muster Roll

for March & April, 1864.

Present or absent Present

Stoppage, $ 100 for

Due Gov't, $ 100 for

Remarks: Stole wrench & Gun cover

Book mark:

D. O. York

(858) Copyist

3 U.S.C.T.

Pvt. Charles Lewis, Co. E, 3 Reg't U. S. Col'd Infantry.

Appears on

Company Muster Roll

for May & June 1864

Present or absent Present

Stoppage, $ ..... 100 for .....

Due Gov't, $ ..... 100 for .....

Remarks: .....

Book mark: .....

S W Furness
Copyist

(858)

NARA 376

L | 3 | U.S.C.T.

Charles Lewis

Priv, Co. E, 3 Reg't U. S. Col'd Infantry.

Appears on

Company Muster Roll

for July & Aug, 1864

Present or absent Present

Stoppage, $ ---- 100 for ----

Due Gov't, $ ---- 100 for ----

Remarks: Free on or before April 19, 1861

Book mark: ----

S W Forrest
Copyist

(858)

L | 3 | U.S.C.T.

Charles Lewis

Pvt., Co. E, 3 Reg't U. S. Col'd Infantry.

Appears on

Company Muster Roll

for Sept & Oct, 1864

Present or absent Not Stated

Stoppage, $ ..... 100 for .....

Due Gov't, $ ..... 100 for .....

Remarks: Paid $7 pr month from enlistment to June 30/64. back pay due

Book mark: .....

S W Gomes

Copyist

(358)

L | 3 | U.S.C.T.

Charles Lewis

Pvt, Co. E, 3 Reg't U. S. Col'd Infantry.

Appears on

Company Muster Roll

for Nov & Dec, 1864

Present or absent Not Stated

Stoppage, $ ...... 100 for ......

Due Gov't, $ ...... 100 for ......

Remarks: Paid $7. per month from enlistment to April 30/64. back pay due.

Book mark:

S W Frost
Copyist

(358)

NARA 379

L | 3 | U.S.C.T.

Charles Lewis

Pvt, Co. E, 3 Reg't U. S. Col'd Infantry.

Appears on

Company Muster Roll

for Jany & Feby 1865

Present or absent Not stated

Stoppage, $ ---- 100 for ----

Due Gov't, $ ---- 100 for ----

Remarks: Paid $7. pr. month from enlistment to April 30/64. back pay due.

Book mark:

S W Powell
Copyist

(358)

E | 3 | U.S.C.T.

Charles Lewis

Priv, Co. E, 3 Reg't U. S. Col'd Infantry.

Appears on

Company Muster Roll

for March & April, 1865.

Present or absent Present

Stoppage, $ 100 for

Due Gov't, $ 100 for

Remarks: Paid $7 per mo. from enlistment to Apr. 30, 64 back pay due

Book mark:

Joseph Stewart

(858) Copyist

L | 3 | U.S.C.T.

Charles Lewis

Pvt, Co. E, 3 Reg't U. S. Col'd Infantry.

Appears on

Company Muster Roll

for May & June, 1865.

Present or absent Present

Stoppage, $ 100 for

Due Gov't, $ 100 for

Remarks: Paid $7 per month from enlistment to Apr 30" 64 back pay due.

Book mark:

W R Houston

(858)

Copyist

R | 3 | U.S.C.T.

Charles Lewis

Priv., Co. E, 3 Reg't U. S. Col'd Infantry.

Appears on

Company Muster Roll

for July & Aug, 1865.

Present or absent Present

Stoppage, $ 100 for

Due Gov't, $ 100 for

Remarks:

Book mark:

Joseph Stewart

(858) Copyist

L | 3 | U.S.C.T.

Charles Lewis

Pvt., Co. E, 3 Reg't U. S. Col'd Infantry.

Appears on **Co. Muster-out Roll,** dated Jacksonville Fla, Oct 31, 1865.

Muster-out to date Oct 31, 1865.

Last paid to June 30, 1865.

Clothing account:

Last settled....., 186 ; drawn since $.....100

Due soldier $.....100; due U. S. $ 4 29/100

Am't for cloth'g in kind or money adv'd $.....100

Due U. S. for arms, equipments, &c., $ 6 20/100

Bounty paid $.....100; due $.....100

Remarks: Private from enlistment. Stoppage for camp and Garrison equipage lost $7.19

Book mark:

Joseph Stewart

(361) Copyist.

727

Lewis, Francis

Co C, 3 U.S. Col'd Inf.

Corporal | Sergeant

CARD NUMBERS.

1	6254729	26	
2	6254809	27	
3	6254893	28	
4	6254969	29	
5	6255045	30	
6	6255119	31	
7	6255191	32	
8	6255261	33	
9	6255330	34	
10	6255396	35	
11	6255473	36	
12	6255550	37	
13	6255643	38	
14	6255739	39	
15	6255835	40	
16	9060736	41	
17		42	
18		43	
19		44	
20		45	
21		46	
22		47	
23		48	
24		49	
25		50	

Book Mark:

See also

Д. 1495718 Ротатя

NARA 386

L | 3 | U.S.C.T.

Francis Lewis

, Co. C, 3 Reg't U. S. Col'd Inf.

Appears on

Company Descriptive Book

of the organization named above.

DESCRIPTION.

Age 19 years; height 5 feet 8 inches.

Complexion Yellow

Eyes Blk ; hair Blk

Where born Montgomery Penna

Occupation Teamster

ENLISTMENT.

When July 3, 1863

Where Phila Pa.

By whom Lt Col Wagner; term 3 y'rs.

Remarks:

J Herriston
Copyist.

(383g)

L | 3 | U.S.C.T.

Francis Lewis

Corpl, Co. G, 3 Reg't U. S. Col'd Infantry.

Age 40 years.

Appears on

Company Muster-in Roll

of the organization named above. Roll dated Phila Pa July 26, 1863.

Muster-in to date July 3, 1863.

Joined for duty and enrolled:

When July 3, 1863.*

Where Phila Pa *

Period 3 years.*

Remarks:

*☞ Muster-in roll shows enrollment of all men of this company as of same date and place. See enrollment on subsequent card or cards.

Book mark:

C. H. McLaughlin

(356c) Copyist

L | 3 | U.S.C.T.

Francis Lewis

Corpl., Co. C, 3 Reg't U. S. Col'd Infantry.

Appears on

Company Muster Roll

for July 3 to Aug 31, 1863.

Joined for duty and enrolled:

When July 3, 1863.*

Where Phila. Pa.*

Period 3 years.*

Present or absent Present

Stoppage, $ 100 for

Due Gov't, $ 100 for

Remarks:

* ☞ See enrollment on card from muster-in roll.

Book mark:

C. S. McLaughlin

(358c) Copyist.

L | 3 | U.S.C.T.

Francis Lewis

Corpl, Co. C, 3 Reg't U. S. Col'd Infantry.

Appears on

Company Muster Roll

for Sept. & Oct., 1863.

Joined for duty and enrolled:

When July 3, 1863.*

Where Phila Pa.*

Period 3 years.*

Present or absent Present.

Stoppage, $ 100 for

Due Gov't, $ 100 for

Remarks:

* ☞ See enrollment on card from muster-in roll.

Book mark:

C. S. McLaughlin
Copyist.

(358c)

L | 3 | U.S.C.T.

Francis Lewis

Corpl., Co. C, 3 Reg't U. S. Col'd Infantry.

Appears on

Company Muster Roll

for Nov. & Dec, 1863.

Joined for duty and enrolled:

When July 31, 1863.*

Where Philad. Pa.*

Period 3 years.*

Present or absent Present

Stoppage, $ 100 for

Due Gov't, $ 100 for

Remarks:

* ☞ See enrollment on card from muster-in roll.

Book mark:

C. T. McLaughlin

(358c) Copyist.

L | 3 | U.S.C.T.

Francis Lewis

Corpl., Co. C, 3 Reg't U. S. Col'd Infantry.

Appears on

Company Muster Roll

for Jan. & Feb, 1864.

Joined for duty and enrolled:

When July 3, 1863.*

Where Phila Pa. *

Period 3 years.*

Present or absent Present

Stoppage, $ 100 for

Due Gov't, $ 100 for

Remarks:

* ☞ See enrollment on card from muster-in roll.

Book mark:

C M Laughlin

(358c) Copyist.

L | 3 | U.S.C.T.

Francis Lewis

Corpl., Co. C, 3 Reg't U. S. Col'd Infantry.

Appears on

Company Muster Roll

for Mar & Apr, 1864.

Joined for duty and enrolled:

When July 3, 1863.*

Where Phila Pa *

Period 3 years.*

Present or absent Present

Stoppage, $ 100 for

Due Gov't, $ 100 for

Remarks:

* ☞ See enrollment on card from muster-in roll.

Book mark:

A. L. McLaughlin

(358c) *Copyist.*

NARA 393

L. | 3 | U.S.C.T.

Francis Lewis,

Corporal Co. C, 3 Reg't U. S. Col'd Infantry.

Appears on

Company Muster Roll

for May and June, 1864

Joined for duty and enrolled:

When July 3d, 1863.*

Where Philadelphia, Pa.*

Period 3 years.*

Present or absent Present.

Stoppage, $ ______ 100 for ______

Due Gov't, $ ______ 100 for ______

Remarks:

* See enrollment on card from muster-in roll.

Book mark:

J. Lewis[?]
Copyist.

(358c)

a. | 3 | U.S.C.T.

Francis Lewis,

Corporal, Co. C, 3 Reg't U. S. Col'd Infantry.

Appears on

Company Muster Roll

for July & August, 186 4.

Joined for duty and enrolled:

When July 3d., 186 3*

Where Philadelphia, Pa.*

Period 3 years.*

Present or absent Present

Stoppage, $ 100 for

Due Gov't, $ 100 for

Remarks: Free on or before April 19th. 1861.

* ☞ See enrollment on card from muster-in roll.

Book mark:

Sharin.

(358c) *Copyist.*

NARA 393

L | 3 | U.S.C.T.

Francis Lewis,

Corporal Co. C, 3 Reg't U. S. Col'd Infantry.

Appears on

Company Muster Roll

for Sept. & Oct., 1864

Joined for duty and enrolled:

When July 3d., 1863.*

Where Philadelphia, Pa.*

Period 3 years.*

Present or absent Present

Stoppage, $ 100 for

Due Gov't, $ 100 for

Remarks: Free on or before April 19th. 1861. Paid seven dollars per month to April 30th. 1864 Back pay due.

* ☞ See enrollment on card from muster-in roll.

Book mark:

Lewis

(358c) *Copyist.*

L. | 3 | U.S.C.T.

Francis Lewis,

Corpl, Co. C, 3 Reg't U. S. Col'd Infantry.

Appears on

Company Muster Roll

for Nov. & Dec., 1864

Joined for duty and enrolled:

When July 3d., 1863.*

Where Philadelphia, Pa.*

Period 3 years.*

Present or absent Present

Stoppage, $..... 100 for .....

Due Gov't, $..... 100 for .....

Remarks: Paid but $7.00 per month to April 30 1864, Back pay due.

Free.

* See enrollment on card from muster-in roll.

Book mark:

Sharon

(358c) *Copyist.*

NARA 397

L | 3 | U.S.C.T.

Francis Lewis

Copl, Co. C, 3 Reg't U. S. Col'd Infantry.

Appears on

Company Muster Roll

for Jan. and Feb., 1865.

Joined for duty and enrolled:

When July 3d., 1863*

Where Philadelphia, Pa.*

Period 3 years.*

Present or absent Present.

Stoppage, $ 100 for

Due Gov't, $ 100 for

Remarks: Free.

* See enrollment on card from muster-in roll.

Book mark:

Tharin
Copyist.

(358c)

L. | 3 | U.S.C.T.

Francis Lewis

Corp., Co. C, 3 Reg't U. S. Col'd Infantry.

Appears on

Company Muster Roll

for Mch + Apl, 1865.

Joined for duty and enrolled:

When 3 July, 1863.*

Where Phila. Pa.*

Period 3 years.*

Present or absent present.

Stoppage, $ 43/100 for ordnance

Due Gov't, $ 100 for

Remarks: Free.

* See enrollment on card from muster-in roll.

Book mark:

G. E. Dayton

(358c) Copyist.

L. | 3 | U.S.C.T.

Francis Lewis

Corp., Co. C, 3 Reg't U. S. Col'd Infantry.

Appears on

Company Muster Roll

for May & June, 1865.

Joined for duty and enrolled:

When 3 July, 1863.*

Where Phila, Pa.*

Period 3 years.*

Present or absent present.

Stoppage, $ 43/100 for ordnance

Due Gov't, $ /100 for

Remarks: Free

* ☞ See enrollment on card from muster-in roll.

Book mark:

G. E. Dayton

(358c) Copyist.

L. | 3 | U.S.C.T.

Francis Lewis

Sgt, Co. C, 3 Reg't U. S. Col'd Infantry.

Appears on

Company Muster Roll

for July + Aug, 1865.

Joined for duty and enrolled:

When 3 July, 1863.*

Where Phila, Pa: *

Period 3 years.*

Present or absent present

Stoppage, $ 02/100 for ordnance.

Due Gov't, $ /100 for

Remarks: Promoted to Sergt from Corp. July 2/65, vice Booth, dec'd.

* ☞ See enrollment on card from muster-in roll.

Book mark:

G. E. Dayton

(358c) Copyist.

L. | 3 | U.S.C.T.

Francis Lewis

Sgt., Co. C, 3 Reg't U. S. Col'd Infantry.

Appears on **Co. Muster-out Roll,** dated Jacksonville Fla: 31 Oct, 1865.

Muster-out to date 31 Oct, 1865.

Last paid to 30 June, 1865.

Clothing account:

Last settled....., 186 ; drawn since $.....100

Due soldier $ 18 34/100; due U. S. $.....100

Am't for cloth'g in kind or money adv'd $.....100

Due U. S. for arms, equipments, &c., $ 9 60/100

Bounty paid $.....100; due $ 100 00/100

Remarks: Joined as Corpl. Promoted to Sergt July 3/65.

Book mark: 94.540

G. E. Dayton,

(861) Copyist.

NARA 402

Lewis, Henry

Co. L, 3 U.S. Col'd Inf.

Private	Private

CARD NUMBERS.

1 6251801.	26
2 6260476.	27
3 6260568.	28
4 6260650.	29
5 9061219	30
6	31
7	32
8	33
9	34
10	35
11	36
12	37
13	38
14	39
15	40
16	41
17	42
18	43
19	44
20	45
21	46
22	47
23	48
24	49
25	50

Book Mark:

See also

NARA 403

D-3078813-Aud. N.D

L. | 3 | U.S.C.T.

Henry Lewis

, Co. I, 3 Reg't U. S. Col'd Inf.

Appears on

Company Descriptive Book

of the organization named above.

DESCRIPTION.

Age 18 years; height 5 feet 6 inches.

Complexion Black

Eyes Hazel; hair Black

Where born Penna

Occupation Laborer

ENLISTMENT.

When Dec. 22, 1864.

Where Reading Penna. 8th Dist. Pa.

By whom ; term 3 y'rs.

Remarks: Substitute

Daggett

(383y) Copyist.

L | 3 | **U.S.C.T.**

Henry Lewis

Appears with rank of Pvt on

Muster and Descriptive Roll of a Detachment of Substitutes forwarded

for the 3 Reg't U. S. Col'd Inf. Roll dated Chestnut Hill Pa Camp Wm Penn, Feb 10, 1865.

Where born Penn

Age 18 y'rs; occupation Laborer

When enlisted ....., 186 .

Where enlisted .....

For what period enlisted 3 years.

Eyes Hazel; hair Blk

Complexion Blk; height 5 ft. 6 in.

When mustered in Dec 22, 1864.

Where mustered in Reading Pa

Bounty paid $ 100; due $ 100

Where credited .....

Company to which assigned .....

Remarks: Sub for Geo. Filbert Wornelsdorf 4/8. Sub-Dist. 8 Enl Dist.

Book mark: .....

Saunt

(339) Copyist

NARA 486

L | 3 | U.S.C.T.

Henry Lewis

Priv., Co. G, 3 Reg't U. S. Col'd Infantry.

Appears on

Company Muster Roll

for Mch. & Apr., 1865.

Present or absent Present

Stoppage, $ 100 for

Due Gov't, $ 100 for

Remarks:

Book mark:

Sando

Copyist

(858)

L | 3 | U.S.C.T.

Henry Lewis

Pvt., Co. G, 3 Reg't U. S. Col'd Infantry.

Appears on

Company Muster Roll

for May and June, 1865.

Present or absent Present

Stoppage, $ 100 for

Due Gov't, $ 100 for

Remarks:

NEXT ROLL ON FILE MUSTER OUT.

Book mark:

Leary

(858) Copyist

NARA 48B

G. | 3 | U.S.C.T.

Henry Lewis

Pri., Co. G, 3 Reg't U. S. Col'd Infantry.

Appears on **Co. Muster-out Roll,** dated Jacksonville Fla., Oct. 31, 1865.

Muster-out to date Oct. 31, 1865.

Last paid to June 30, 1865.

Clothing account:

Last settled....., 186 ; drawn since $.....100

Due soldier $.....100; due U. S. $ 44 44/100

Am't for cloth'g in kind or money adv'd $.....100

Due U. S. for arms, equipments, &c., $.....100

Bounty paid $.....100; due $.....100

Remarks: Stop for Comp. & Gas Equipage $4.95 and for Ordnance $6.10. Private from enlistment.

Book mark:

(361) [illegible] Copyist.

L

Lewis, Henry

, Co. Reg't

1 Inclosures.

Bed Cards	Final Statements
Burial Records	Furloughs or L. of A
Certs. of Dis. for Discharge	Med. Certificates
C. M. Charges	Med. Des. Lists
Descriptive Lists	Orders
Discharge Certificates	Pris. of War Record
Enlistment Papers 1	Resignations

Other papers relating to—

Admission to Hosp'l	Furlough or L. of A.
Casualty Sheet	Med. Examination
Confinement	Misc. Information
Contracts	Pay or Clothing
Death or Effects	Personal Reports
Desertion	Rank
Discharge from Hosp'l	Transfer to Hosp'l
Discharge from Service	Transfer to V. R. C.
Duty	Transportation

NARA 418

DECLARATION OF SUBSTITUTE.

I, George Filbert Col, desiring to ENLIST in the Army of the United States, for THREE YEARS, *Do declare*, That I am Eighteen years and Seven months of age; that I have never been discharged from the United States service on account of disability or by sentence of a court martial; and I know of no impediment to my serving honestly and faithfully as a soldier for three years.

GIVEN at Reading Pa
the 22nd day of December 1864

WITNESS:

Geo D Seaf

henry lewis

No. 223

Henry Lewis Col

Enlisted at Reading Pa

As Substitute for

George Filbert Col

On the 22nd day of December, 1864,

By

Geo W Durell

Geo W Harrison

Martin Luther

Board of Enrollment,

8th Dist. of Penna

49.

NARA 411

(No. 39.)

SUBSTITUTE

VOLUNTEER ENLISTMENT.

STATE OF Pennsylvania ~~TOWN~~ City OF Reading

I, Henry Lewis Coles, born in the State of Penna, aged Eighteen years, and by occupation a Tanner, DO HEREBY ACKNOWLEDGE to have agreed with George Filbert, Esq., of Womelsdorf 45th Dist 8th Dist Pa

to become his **SUBSTITUTE** in the Military Service, for a sufficient consideration paid and delivered to me, on the Twenty Second day of December, 1864; and having thus agreed with said George Filbert, I DO HEREBY ACKNOWLEDGE to have enlisted this Twenty Second day of December, 1864, to serve as a ***Soldier*** in the **Army of the United States of America,** for the period of *THREE YEARS*, unless sooner discharged by proper authority. I do also agree to accept such bounty, pay, rations, and clothing as are, or may be, established by law for soldiers. And I do solemnly swear that I will bear true and faithful allegiance to the ***United States of America;*** that I will serve them honestly and faithfully against all their enemies or opposers whomsoever; and that I will observe and obey the orders of the President of the United States and the orders of the officers appointed over me, according to the Rules and Articles of War.

SWORN and subscribed to, at Reading Pa
this 22nd of December, 1864.
BEFORE Geo W. Snell
Capt & Pro Mar 8th Dist Pa

Henry Lewis

A Substitute Not Entitled to Bounty

We certify, on honor, That we have carefully examined the above-named Volunteer Substitute agreeably to the Regulations, and that, in our opinion, he is free from all bodily defects and mental infirmity which would in any way disqualify him from performing the duties of a soldier; that he was entirely sober when enlisted; that he is of lawful age, (not under 18 years;) and that, in accepting him as duly qualified to perform the duties of an able-bodied soldier, and as a Substitute in lieu of George Filbert Enrolled, ~~drafted~~ in Womelsdorf 45th Dist 8th Dist Pa, 186 , we have strictly observed the Regulations which govern in such cases. This soldier has Hazel eyes, Black hair, Black complexion; is 5 feet 6 inches high.

Geo W. Snell
Provost Marshal.

George W. Marcein
Commissioner of Board.

Martin Luther
Surgeon of Board.

Board of Enrollment of 8th *Dist. of* Penna

Lewis, John

Co. L, 3 U.S. Col'd Inf.

Private Private

CARD NUMBERS.

1	6259601	26	
2	6259677	27	
3	6259760	28	
4	6259838	29	
5	6259915	30	
6	6259998	31	
7	6260077	32	
8	6260157	33	
9	6260233	34	
10	6260312	35	
11	6260389	36	
12	6260475	37	
13	6260567	38	
14	6260649	39	
15	9061224	40	
16		41	
17		42	
18		43	
19		44	
20		45	
21		46	
22		47	
23		48	
24		49	
25		50	

Book Mark:

See also

NARA 413

S. 2899661 And WD

G | 3 | U.S.C.T.

John Lewis

, Co. G, 3 Reg't U. S. Col'd Inf.

Appears on

Company Descriptive Book

of the organization named above.

DESCRIPTION.

Age 22 years; height 5 feet 6 inches.

Complexion Brown

Eyes Black; hair Black

Where born Near Burlington N.J.

Occupation Farmer

ENLISTMENT.

When July 16, 1863.

Where Phila^da Penna.

By whom Lt. Col Wagner, term 3 y'rs.

Remarks:

Daggett

(383y) Copyist.

NARA 415

L | 3 | U.S.C.T.

John Lewis

Pvt, Co. G, 3 Reg't U. S. Col'd Infantry.

Age 21 years.

Appears on

Company Muster-in Roll

of the organization named above. Roll dated

Philada, Pa July 20, 1863.

Muster-in to date July 16, 1863

Joined for duty and enrolled:

When July 11, 1863.

Where Philadelphia, Pa

Period 3 years.

Remarks:

Book mark:

Lossbrez

(856) *Copyist.*

L | 3 | U.S.C.T.

John Lewis

Pvt, Co. G, 3 Reg't U. S. Col'd Infantry.

Appears on

Company Muster Roll

for July 13/63 to Aug 31/1863.

Present or absent Present

Stoppage, $ 100 for

Due Gov't, $ 100 for

Remarks:

Book mark:

Wooster

(858) Copyist

L | 3 | U.S.C.T.

John Lewis

Pvt, Co. G, 3 Reg't U. S. Col'd Infantry.

Appears on

Company Muster Roll

for Sept & Oct, 1863.

Present or absent Present

Stoppage, $ 100 for

Due Gov't, $ 100 for

Remarks:

Book mark:

(858) Copyist

L | 3 | U.S.C.T.

John Lewis

Pvt, Co. G, 3 Reg't U. S. Col'd Infantry.

Appears on

Company Muster Roll

for Nov & Dec, 1863.

Present or absent Present

Stoppage, $ 100 for

Due Gov't, $ 100 for

Remarks:

Book mark:

W D Blake

(858) Copyist

NARA 419

L | 3 | U.S.C.T.

John Lewis

Pvt, Co. G, 3 Reg't U. S. Col'd Infantry.

Appears on

Company Muster Roll

for Jan & Feb, 1864.

Present or absent Present

Stoppage, $ 100 for

Due Gov't, $ 100 for

Remarks:

Book mark:

W. D. [illegible]

(858) Copyist

L | 3 | U.S.C.T.

John Lewis

Pvt., Co. G, 3 Reg't U. S. Col'd Infantry.

Appears on

Company Muster Roll

for Mch. & Apl., 1864

Present or absent Present

Stoppage, $ 100 for

Due Gov't, $ 100 for

Remarks:

Book mark:

Randall

(858) Copyist

L | 3 | U.S.C.T.

John Lewis

Pvt., Co. G, 3 Reg't U. S. Col'd Infantry.

Appears on

Company Muster Roll

for May & June, 1864.

Present or absent Present

Stoppage, $ 100 for

Due Gov't, $ 100 for

Remarks:

Book mark:

Randall

(858) Copyist

L | 3 | U.S.C.T.

John Lewis

~~Private~~ Co. G, 3 Reg't U. S. Col'd Infantry.

Appears on

Company Muster Roll

for July & Aug., 1864.

Present or absent Present

Stoppage, $ 100 for

Due Gov't, $ 100 for

Remarks: Free on or before ~~Feby~~ Apr. 19, 1861.

Not appears on Roll.

Book mark:

Keeper.

(858) Copyist

L | 3 | U.S.C.T.

John Lewis

Pri, Co. G, 3 Reg't U. S. Col'd Infantry.

Appears on

Company Muster Roll

for Sept & Oct, 1864.

Present or absent Present

Stoppage, $ 100 for

Due Gov't, $ 100 for

Remarks: Free on or before Apr 19-1861 Paid but $7. per month from date of enlistment to Feb 29-1864 Back pay due

Book mark:

C C Parkin

(858) Copyist

L | 3 | U.S.C.T.

John Lewis

Pvt., Co. G, 3 Reg't U. S. Col'd Infantry.

Appears on

Company Muster Roll

for Nov. & Dec., 1864.

Present or absent Present

Stoppage, $ 100 for

Due Gov't, $ 100 for

Remarks: Free on or before April 19th 1861. Paid but $7. per Mo. from date of enlistment to Feb. 29th 1864. Back pay due. Stop for Wiper, Screw Driver, Canteen, Haversack, ½ Shelter tent.

Book mark:

Randall

Copyist

(858)

L | 3 | U.S.C.T.

John Lewis

Pvt., Co. G, 3 Reg't U. S. Col'd Infantry.

Appears on

Company Muster Roll

for Jan. & Feb., 1865.

Present or absent Present

Stoppage, $ 100 for

Due Gov't, $ 100 for

Remarks: Free, on or before April 19th 1861. Paid but $7. per. Mo. from date of Enlistment to Feb. 29th 1864. Back pay due. Stop for Screw Driver, Wiper, Haversack, Canteen, ½ Shelter Tent.

Book mark:

Randall

(858) Copyist

L | 3 | U.S.C.T.

John Lewis

Pvt., Co. G, 3 Reg't U. S. Col'd Infantry.

Appears on

Company Muster Roll

for Mch. & Apr., 1865.

Present or absent Present

Stoppage, $ 100 for

Due Gov't, $ 100 for

Remarks: Paid bnty $7 per month from date of enlistment to Feb. 29, 1864. Back pay due. Stop for wiper, screw driver, haversack, canteen, 1/2 shelter tent. Free April 19, 1861.

Book mark:

Sandy

(858) Copyist

NARA 427

L | 3 | U.S.C.T.

John Lewis

Pvt, Co. G, 3 Reg't U. S. Col'd Infantry.

Appears on

Company Muster Roll

for May and June, 1865.

Present or absent Present

Stoppage, $ 100 for

Due Gov't, $ 100 for

Remarks: Free. Paid but $7 per m. from date of enlistment to Oct. 29, 1864. Back pay due. Stop screw Driver, wiper, Haversack, canteen, 1/2 Shelter Tent.

NEXT ROLL ON FILE MUSTER OUT.

Book mark:

(858)

Leavy
Copyist

G. | 3 | U.S.C.T.

John Lewis

Pvt., Co. G, 3 Reg't U. S. Col'd Infantry.

Appears on **Co. Muster-out Roll,** dated Jacksonville Fla., Oct. 31, 1865.

Muster-out to date Oct. 31, 1865.

Last paid to June 30, 1865.

Clothing account:

Last settled....., 186 ; drawn since $.....100

Due soldier $.....100; due U. S. $ 18 96/100

Am't for cloth'g in kind or money adv'd $.....100

Due U. S. for arms, equipments, &c., $.....100

Bounty paid $.....100; due $ 100 100

Remarks: Stop for Ordnance $6.20.

Private Brown enlistment.

Book mark: 266.016

(361) J. B. Stearns *Copyist.*

730

Lewis Lucine

Co ....., 3 U.S. Col'd Inf.

Private Private

CARD NUMBERS.

1 6251471	26
2	27
3	28
4	29
5	30
6	31
7	32
8	33
9	34
10	35
11	36
12	37
13	38
14	39
15	40
16	41
17	42
18	43
19	44
20	45
21	46
22	47
23	48
24	49
25	50

Book Mark:

See also

NARA 430

L | 3 | U.S.C.T.

Lucius Lewis

Appears with rank of Priv on

Muster and Descriptive Roll of a Detachment of U. S. Vols. forwarded

for the 3 Reg't U. S. Col'd Infantry. Roll dated

Greensburg Pa., Mar 14, 1865.

Where born Fayette Co Penn

Age 19 y'rs; occupation Laborer

When enlisted March 14, 1865.

Where enlisted Greensburg Pa

For what period enlisted 1 years.

Eyes black; hair Curly

Complexion Mulatto; height 5 ft. 8 in.

When mustered in March 14, 1865.

Where mustered in Greensburg Pa

Bounty paid $ 33 1/3 100; due $ 66 2/3 100

Where credited Cong Dist S D 121 63 Jefferson Fayette Co Penn

Company to which assigned

Remarks:

No other w/c on Rolls of Regt

Book mark:

S P York Copyist.

(339)

Lewis Lucius

, Co. K, 3 Reg't U. S. C. T.

3 Enclosures.

Bed Cards	Final Statements
Burial Records	Furloughs or L. of A
Certs. of Dis. for Discharge	Med. Certificates
C. M. Charges	Med. Des. Lists
Descriptive Lists	Orders
Discharge Certificates	Pris. of War Record
Enlistment Papers 2	Resignations

Other papers relating to—

Admission to Hosp'l	Furlough or L. of A
Casualty Sheet	Med. Examination
Confinement	Misc. Information
Contracts	Pay or Clothing
Death or Effects	Personal Reports
Desertion	Rank
Discharge from Hosp'l	Transfer to Hosp'l
Discharge from Service	Transfer to V. R. C.
Duty	Transportation

DECLARATION OF RECRUIT.

I, Lucius Lewis, desiring to VOLUNTEER as a Soldier in the Army of the United States, for the term of ~~THREE~~ YEARS, Do Declare, That I am 19 years and — months of age; that I have never been discharged from the United States service on account of disability or by sentence of a court martial, or by order before the expiration of a term of enlistment; and I know of no impediment to my serving honestly and faithfully as a soldier for ~~three~~ one years.

GIVEN at Greensburg Pa
the 14th day of Mar 1865

Witness: Samuel B McMillen

Lucious Lewis

No. ____

Lucius Lewis

Volunteered at Greensburg Pa

Mar 14th, 1865,

By Wm Bender

Capt & Pro Mar 21st Dist Pa

~~Regiment of~~

____ enlistment; last served in Company ( )

____ Reg't of ____

Discharged ____, 18 .

CONSENT IN CASE OF MINOR.

I, ____________, Do certify, That I am the ____________ of ____________; that the said ____________ is ____________ years of age; and I do hereby freely give my CONSENT to his volunteering as a SOLDIER in the ARMY OF THE UNITED STATES for the period of THREE YEARS.

GIVEN at ____________
the ______ day of ____________

Witness:

____

____

(A. G. O. No. 74 & 76.)

NOTE 1.—This blank will be used for both enlistments and re-enlistments—enlistment of veterans, &c., &c., in the volunteer service. They will be made out in duplicate in all cases—one to accompany the recruiting return of the superintendent (not the recruiting officer) to the Adjutant General, and one to accompany the accounts of the officer who pays bounty, &c. The Regiment and Company in which the soldier last served should be given on the back.

NOTE 2.—An enlistment holds to service. A muster-in must, in all cases, precede payment of pay, bounty, pension, &c. A muster-in roll-must, in all cases, be filed in the Adjutant General's Office as evidence of muster-in. The mustering officer, commissary, or assistant commissary of musters, as the case may be, will countersign both enlistments as having mustered the soldier into the service of the United States before either of them is given to the disbursing officer.

VOLUNTEER ENLISTMENT.

STATE OF Pennsylvania

TOWN OF Greensburg

I, Lucius Lewis, born in Fayette Co, in the State of Penna, aged 19 years, and by occupation a Laborer, Do HEREBY ACKNOWLEDGE to have volunteered this 14" day of March, 1865, to serve as a **Soldier** in the **Army of the United States of America**, for the period of ~~THREE~~ one YEAR~~S~~, unless sooner discharged by proper authority: Do also agree to accept such bounty, pay, rations, and clothing, as are, or may be, established by law for volunteers. And I, Lucius Lewis, do solemnly swear, that I will bear true faith and allegiance to the ***United States of America***, and that I will serve them honestly and faithfully against all their enemies or opposers whomsoever; and that I will observe and obey the orders of the President of the United States, and the orders of the officers appointed over me, according to the Rules and Articles of War.

Sworn and subscribed to, at Greensburg Pa
this 14" day of March, 1865, } Lucious Lewis
BEFORE Wm Blewitter
Capt & Pro Mar 21st Dist Pa

I CERTIFY, ON HONOR, That I have carefully examined the above-named Volunteer, agreeably to the General Regulations of the Army, and that, in my opinion, he is free from all bodily defects and mental infirmity, which would in any way disqualify him from performing the duties of a soldier.

Sub Dist 63

F C Robinson
EXAMINING SURGEON.
21st Dist Pa

I CERTIFY, ON HONOR, That I have minutely inspected the Volunteer previously to his enlistment, and that he was entirely sober when enlisted; that, to the best of my judgment and belief, he is of lawful age; and that, in accepting him as duly qualified to perform the duties of an able-bodied soldier, I have strictly observed the Regulations which govern the recruiting service. This soldier has Black *eyes*, Curly *hair*, Mulatto *complexion*, is 5 *feet* 8 *inches* high.

Wm Blewitter
Capt & Pro Mar 21st Dist Pa
Regiment of ______ *Volunteers*,
RECRUITING OFFICER.

(A. G. O. No. 74 & 76.)

Certificate for the Signature of the Mustering Officer, Commissary, or Assistant Commissary of Musters, as the case may be.

Mustered into the service of the United States, for ~~three~~ one years or during the war, from date of enlistment in Co. K, 3d Regiment of Colored U.S. Volunteers, on the 14" day of March, 1865, at Greensburg Pa and credited to 63 ~~Ward (or~~ Sub-district,) ~~in the Town of~~ Jefferson Tp, in the County of Fayette 21st Congressional District, in the State of Penna

Bounty paid at time of Muster-in:

U. S. Bounty, ______

Local Bounty, ______

Sworn to his Residence

Wm Blewitter
Capt & Pro Mar
21st Dist Pa

DECLARATION OF RECRUIT.

I, Lucius Lewis, desiring to VOLUNTEER as a Soldier in the Army of the United States, for the term of ~~THREE~~ one YEAR, Do Declare, That I am 19 years and —— months of age; that I have never been discharged from the United States service on account of disability or by sentence of a court martial, or by order before the expiration of a term of enlistment; and I know of no impediment to my serving honestly and faithfully as a soldier for ~~three~~ one year.

GIVEN at Greensburg Pa

the 14th day of March 1865

Witness:

Samuel B. McGwillen

Lucious Lewis

No. 335

Lucius Lewis

Volunteered at Greensburg Pa

Mar 14th, 1865,

By Wm B. Lowther

Capt 4th Inf Mar 21st [illegible]

Regiment of

enlistment; last served in Company ( )

Reg't of

Discharged , 18 .

3rd Regt. Colored Vols.

CONSENT IN CASE OF MINOR.

I, ______________, Do certify, That I am the ______________ of ______________; that the said ______________ is ______________ years of age; and I do hereby freely give my CONSENT to his volunteering as a SOLDIER in the ARMY OF THE UNITED STATES for the period of THREE YEARS.

GIVEN at ______________

the ________ day of ______________

Witness:

____

____

(A. G. O. No. 74 & 76.)

NOTE 1.—This blank will be used for both enlistments and re-enlistments—enlistment of veterans, &c., &c., in the volunteer service. They will be made out in duplicate in all cases—one to accompany the recruiting return of the superintendent (not the recruiting officer) to the Adjutant General, and one to accompany the accounts of the officer who pays bounty, &c. The Regiment and Company in which the soldier last served should be given on the back.

NOTE 2.—An enlistment holds to service. A muster-in roll must, in all cases, precede payment of pay, bounty, pension, &c. A muster-in roll must, in all cases, be filed in the Adjutant General's Office as evidence of muster-in. The mustering officer, commissary, or assistant commissary of musters, as the case may be, will countersign both enlistments as having mustered the soldier into the service of the United States before either of them is given to the disbursing officer.

VOLUNTEER ENLISTMENT.

STATE OF Pennsylvania | TOWN OF Greensburg

I, Lucius Lewis, born in Fayette Co, in the State of Penna, aged 19 years, and by occupation a Laborer, DO HEREBY ACKNOWLEDGE to have volunteered this 14th day of March, 1865, to serve as a **Soldier** in the **Army of the United States of America**, for the period of ~~THREE~~ one YEARS, unless sooner discharged by proper authority: Do also agree to accept such bounty, pay, rations, and clothing, as are, or may be, established by law for volunteers. And I, Lucius Lewis, do solemnly swear, that I will bear true faith and allegiance to the ***United States of America,*** and that I will serve them honestly and faithfully against all their enemies or opposers whomsoever; and that I will observe and obey the orders of the President of the United States, and the orders of the officers appointed over me, according to the Rules and Articles of War.

Sworn and subscribed to, at Greensburg Pa
this 14th day of March, 1865,
BEFORE Wm Bleoritter
Capt & Prov Mar 21st Dist Pa

Lucious Lewis

I CERTIFY, ON HONOR, That I have carefully examined the above-named Volunteer, agreeably to the General Regulations of the Army, and that, in my opinion, he is free from all bodily defects and mental infirmity, which would in any way disqualify him from performing the duties of a soldier.

F C Robinson
EXAMINING SURGEON.
21st Dist Pa

I CERTIFY, ON HONOR, That I have minutely inspected the Volunteer previously to his enlistment, and that he was entirely sober when enlisted; that, to the best of my judgment and belief, he is of lawful age; and that, in accepting him as duly qualified to perform the duties of an able-bodied soldier, I have strictly observed the Regulations which govern the recruiting service. This soldier has Blk *eyes,* Curly *hair,* Mulatto *complexion,* is 5 *feet* 8 *inches* high.

Wm Bleoritter
Capt & Prov Mar 21st Dist Pa
~~*Regiment of*~~ ~~*Volunteers,*~~
RECRUITING OFFICER.

(A. G. O. No. 74 & 76.)

Certificate for the Signature of the Mustering Officer, Commissary, or Assistant Commissary of Musters, as the case may be.

Mustered into the service of the United States, for ~~three~~ one years or during the war, from date of enlistment, in Co. K, 32 Regiment of Colored Volunteers, on the 14th day of March, 1864, at Greensburg Pa and credited to 63 ~~Ward, (or~~ Sub-district,) ~~in the Town of~~ Jefferson Tp, in the County of Fayette Co 21st Congressional District, in the State of Penna

Bounty paid at time of Muster-in:

U. S. Bounty, ——

Local Bounty, ——

Sworn to his residence

Wm Bleoritter
Capt & Pro Mar
21st Dist Pa

NARA 436

[illegible] Pulley

Lewis, Puley

Co K, 3 U.S. Col'd Inf.

Private | Corporal

CARD NUMBERS.

1	6263081	26	
2	6263157.	27	
3	6263241.	28	
4	6263325.	29	
5	6263401.	30	
6	6263478.	31	
7	6263553.	32	
8	6263625.	33	
9	6263697.	34	
10	6263770.	35	
11	6263848.	36	
12	6263890.	37	
13	6263983.	38	
14	6264075.	39	
15	9061547	40	
16		41	
17		42	
18		43	
19		44	
20		45	
21		46	
22		47	
23		48	
24		49	
25		50	

Book Mark:

See also

D-1340888-P.O.MVM

L. | 3 | U.S.C.T.

Peely Lewis

, Co. K., 3 Reg't U. S. Col'd Inf.

Appears on

Company Descriptive Book

of the organization named above.

DESCRIPTION.

Age 21 years; height 5 feet 7 inches.

Complexion Black

Eyes Brown; hair Black

Where born Pittsburg Penna.

Occupation Labor

ENLISTMENT.

When July 15, 1863

Where Phila. Pa.

By whom Lt. Col. Wagner; term 3 y'rs.

Remarks: Appointed Corporal Mar. 10 1865 per S.O. No. 12 Reg. H. 2.

Daggett

(383g) Copyist.

NARA 439

L. | 3 | U.S.C.T.

Puley Lewis,

Pvt., Co. K, 3 Reg't U. S. Col'd Infantry.

Age 21 years.

Appears on

Company Muster-in Roll

of the organization named above. Roll dated

Phila., Pa., Aug. 10, 1863.

Muster-in to date July 15, 1863

Joined for duty and enrolled:

When July 15, 1863.

Where Phila., Pa.

Period 3 years.

Remarks: Sub.

Book mark:

Hastie

Copyist.

(856)

L | 3 | **U.S.C.T.**

Pully Lewis

Appears with rank of Pvt on

Muster and Descriptive Roll of a Detachment of Substitutes forwarded

for the 3 Reg't U. S. Col'd Inf. Roll dated

Pittsburg, July 21, 1863.

Where born Pittsburg Pa

Age 21 y'rs; occupation Laborer

When enlisted July 15, 1863.

Where enlisted Pittsburg

For what period enlisted 3 years.

Eyes Brown; hair Blk

Complexion Blk; height 5 ft. 7 in.

When mustered in July 15, 1863.

Where mustered in Pittsburg

Bounty paid $ 100; due $ 100

Where credited

Company to which assigned Co E

Remarks: Sub for Capt. Kunkerly, South Pittsburg.

Book mark:

Sands

(339) Copyist

AAAA 441

L. | 3 | U.S.C.T.

Lesley Lewis,

Pvt., Co. K, 3 Reg't U. S. Colored Infantry.

Appears on

Company Muster Roll

for Aug. 15 to Aug. 31, 1863.

Present or absent Present

Stoppage, $ 100 for

Due Gov't, $ 100 for

Remarks: Sub.

Book mark:

Hastie

(358) Copyist.

L. | 3 | U.S.C.T.

Perley Lewis,

Pvt, Co. K, 3 Reg't U. S. Colored Infantry.

Appears on

Company Muster Roll

for Sept. & Oct., 1863,

Present or absent Present,

Stoppage, $.....100 for .....

.....

Due Gov't, $.....100 for .....

.....

Remarks: .....

.....

.....

.....

.....

.....

.....

.....

.....

Book mark: .....

Hastie

(358) Copyist.

L. | 3 | U.S.C.T.

Peeby Lewis,

Pvt, Co. K, 3 Reg't U. S. Colored Infantry.

Appears on

Company Muster Roll

for Nov. & Dec., 1863.

Present or absent Present,

Stoppage, $ 100 for

Due Gov't, $ 100 for

Remarks: Stop for camp Equipments $0.44

Book mark:

Hastie.

(858) *Copyist.*

L | 3 | U.S.C.T.

Peely Lewis,

Pvt., Co. K, 3 Reg't U. S. Colored Infantry.

Appears on

Company Muster Roll

for Jan. & Feb., 1864.

Present or absent Present

Stoppage, $ 100 for

Due Gov't, $ 100 for

Remarks: Stop for ordnance

80.20

Book mark:

Hastie

(858) *Copyist.*

L | 3 | U.S.C.T.

Peeby Lewis

Fir, Co. K, 3 Reg't U. S. Colored Infantry.

Appears on

Company Muster Roll

for Mar & Apr, 1864

Present or absent Present

Stoppage, $ 100 for

Due Gov't, $ 100 for

Remarks: Due US. for ordnance 20¢

Book mark:

Randolph
Copyist.

(858)

NARA 44K

L | 3 | U.S.C.T.

Pvt. Lewis

Pvt., Co. K, 3 Reg't U. S. Colored Infantry.

Appears on

Company Muster Roll

for May & June, 1864.

Present or absent Present

Stoppage, $ 100 for

Due Gov't, $ 100 for

Remarks: Due US. for 2 wipers screw-drivers, ball-screw and spring-vise #1.06; Knapsack, haversack & piece shelter-tent #3 2a

Book mark:

Randolph

(358) Copyist.

NARA 447

L | 3 | U.S.C.T.

Pelly Lewis

Pri, Co. K, 3 Reg't U. S. Colored Infantry.

Appears on

Company Muster Roll

for July & Aug, 1864

Present or absent Present

Stoppage, $ .... 100 for ....

Due Gov't, $ .... 100 for ....

Remarks: Free on or before Apr 19/61 Due U.S. for ordnance $,06; for Camp equipage $3,99

Book mark: ....

Randolph

(358) Copyist.

L | 3 | U.S.C.T.

Pelly Lewis

Pvt., Co. K, 3 Reg't U. S. Colored Infantry.

Appears on

Company Muster Roll

for Sept & Oct, 1864.

Present or absent Present

Stoppage, $ 100 for

Due Gov't, $ 100 for

Remarks: Paid $7.00 per mo. from enlist't to Dec 31 63 Back pay due

Book mark:

Randolph

(358) Copyist.

NARA 449

L | 3 | U.S.C.T.

Pelly Lewis

Pri, Co. K, 3 Reg't U. S. Colored Infantry.

Appears on

Company Muster Roll

for Nov & Dec, 1864

Present or absent Present

Stoppage, $ 100 for

Due Gov't, $ 100 for

Remarks: Paid $7 per month from enlist't to Feb 29/64 Back pay due

Book mark:

Randolph
Copyist.

(358)

L | 3 | U.S.C.T.

Pelly Lewis

Pvt., Co. K, 3 Reg't U. S. Colored Infantry.

Appears on

Company Muster Roll

for Jan & Feb, 1865.

Present or absent Present

Stoppage, $ 100 for

Due Gov't, $ 100 for

Remarks: Paid $7 per month from enlistment to Feb 29/64 Back pay due

Book mark:

Randolph

(858) Copyist.

L | 3 | U.S.C.T.

Peely Lewis

Corpl., Co. K, 3 Reg't U. S. Colored Infantry.

Appears on

Company Muster Roll

for March & April, 1865.

Present or absent Present

Stoppage, $ 100 for

Due Gov't, $ 100 for

Remarks: Free on or before April 19th 1861. Pen & but $7.00 per month from enlistment to Dec. 31st 1863 Back pay due. Appointed Corporal Mar. 16th 1865. per. S. O. No. 12. Reg. Hd. Qrs.

Book mark:

E. U. Hunter

(858) Copyist.

NARA 458

L | 3 | U.S.C.T.

Peely Lewis

Corp'l, Co. K, 3 Reg't U. S. Colored Infantry.

Appears on

Company Muster Roll

for May & June, 1865.

Present or absent Present

Stoppage, $ 100 for

Due Gov't, $ 100 for

Remarks: Free on or before April 19th 1861. Appointed corporal March 10th 1865. Paid but $7.00 per month from enlistment to Dec. 31st 1863. Back pay due.

NEXT ROLL ON FILE MUSTER OUT.

Book mark:

E. H. Munter

(858) Copyist.

L | 3 | U.S.C.T.

Peely Lewis

Corpl., Co. K, 3 Reg't U. S. Col'd Infantry.

Appears on **Co. Muster-out Roll,** dated Jacksonville, Fla., Oct. 31, 1865.

Muster-out to date Oct. 31, 1865.

Last paid to June 30, 1865.

Clothing account:

Last settled....., 186 ; drawn since $.....100

Due soldier $.....100; due U. S. $ 33 05/100

Am't for cloth'g in kind or money adv'd $.....100

Due U. S. for arms, equipments, &c., $ 6 00/100

Bounty paid $.....100; due $.....100

Remarks: Substitute, Appd Corpl. March 10th 1865. Joined as private.

Book mark:

E. H. Hunter

(361) *Copyist.*

NARA 434

Lewis Samuel

Co K, 3 U.S. Col'd Inf.

Private | Corporal

CARD NUMBERS.

1 6260757	26
2 6260838	27
3 6260880	28
4 6260962	29
5 6261043	30
6 6261122	31
7 6261199	32
8 6261309	33
9 6261383	34
10 6261431	35
11 6261508	36
12 6261584	37
13 6261675	38
14 6261766	39
15 9061317	40
16	41
17	42
18	43
19	44
20	45
21	46
22	47
23	48
24	49
25	50

Book Mark:

See also

S-1478391- Aud. W. D.
S. 2009713 - Aud W. D. (P. Doc)

L. | 3 | U.S.C.T.

Samuel Louis

....., Co. H., 3 Reg't U. S. Col'd Inf.

Appears on

Company Descriptive Book

of the organization named above.

DESCRIPTION.

Age 22 years; height 5 feet 7 inches.

Complexion Brown

Eyes Brown; hair Brown

Where born Phila. Penn.

Occupation Dyer

ENLISTMENT.

When July 18, 1863.

Where Phila. Penn.

By whom Lt Col Wagner; term 3 y'rs.

Remarks: Appointed Corpl. Sept. 20/63 Sergt. Oct. 26 1863 See Corporals & Sergeants.

Daggett

(383y) Copyist.

L | 3 | U.S.C.T.

Samuel Lewis

Pvt., Co. H, 3 Reg't U. S. Col'd Infantry.

Age 22 years.

Appears on

Company Muster-in Roll

of the organization named above. Roll dated Philadelphia Pa July 25, 1863.

Muster-in to date July 18, 1863

Joined for duty and enrolled:

When July 18, 1863.

Where Phila'd Pa

Period 3 years.

Remarks:

Book mark:

O G Smith

(856) Copyist.

L | 3 | U.S.C.T.

Samuel Lewis

Pri, Co. H, 3 Reg't U. S. Col'd Infantry.

Appears on

Company Muster Roll

for July 25 to Aug 31, 1863.

Present or absent Present

Stoppage, $ 100 for

Due Gov't, $ 100 for

Remarks:

Book mark:

C H Smith

(358) Copyist

L | 3 | U.S.C.T.

Samuel Lewis

Sergt., Co. H, 3 Reg't U. S. Col'd Infantry,

Appears on

Company Muster Roll

for Sept & Oct, 1863.

Present or absent Present

Stoppage, $ 100 for

Due Gov't, $ 100 for

Remarks: To be stopped one (1) Canteen Appointed Sergt. Oct. 26

Book mark:

O H Smith

(358) Copyist

L | 3 | U.S.C.T.

Samuel Lewis

5th Sergt, Co. H, 3 Reg't U. S. Col'd Infantry.

Appears on

Company Muster Roll

for Nov & Dec, 1863.

Present or absent Present

Stoppage, $ 100 for

Due Gov't, $ 100 for

Remarks:

Book mark:

O G Smith

Copyist

(858)

L 3 U.S.C.T.

Samuel Lewis

Sergt., Co. H, 3 Reg't U. S. Col'd Infantry.

Appears on

Company Muster Roll

for Jan & Feb, 186 4.

Present or absent Present

Stoppage, $ 100 for

Due Gov't, $ 100 for

Remarks:

Book mark:

O. G. Smith

Copyist

(358)

NARA 462

L | 3 | U.S.C.T.

Samuel Lewis

Sergt., Co. H, 3 Reg't U. S. Col'd Infantry.

Appears on

Company Muster Roll

for March & April, 1864.

Present or absent Present

Stoppage, $ 100 for

Due Gov't, $ 100 for

Remarks: Stop for one Knapsack, one Canteen, one Non Com. Off. Sword, Belt & Plate.

Book mark:

W. F. Rogan

(358) Copyist

RARA 403

L | 3 | U.S.C.T.

Samuel Lewis

Serg't, Co. H, 3 Reg't U. S. Col'd Infantry.

Appears on

Company Muster Roll

for May & June, 1864.

Present or absent Present

Stoppage, $ 100 for

Due Gov't, $ 100 for

Remarks: Stop for 1 Knapsack, 2 Canteen, 1 Haversack, 1 Non. Com. Off. sword, 1 Belt & plate

Book mark:

Henderson

(358) Copyist

L | 3 | U.S.C.T.

Samuel Lewis

Pvt., Co. H, 3 Reg't U. S. Col'd Infantry.

Appears on

Company Muster Roll

for July & Aug., 1864.

Present or absent Present

Stoppage, $ 100 for

Due Gov't, $ 100 for

Remarks: Sergeant from Oct. 26, 1863 to Aug. 10, 1864. Free on or before April 19, 1861. Stop for one Non. Com. Off. sword belt & plate, one cartridge box & plate, one cartridge box, belt & plate, $2.35; for 2 canteens, one Haversack $1.31.

Book mark:

W F Rogan

(358) Copyist

L | 3 | U.S.C.T.

Samuel Lewis

Pvt., Co. H, 3 Reg't U. S. Col'd Infantry.

Appears on

Company Muster Roll

for Sept. & Oct., 1864.

Present or absent Present

Stoppage, $ 100 for

Due Gov't, $ 100 for

Remarks: Free. Paid $700 pr. mo. from enlistment to Feby 29, 1864. Back pay due. Sergeant from Oct. 26, 1863 to August 20, 1864.

Book mark:

W T Rogers

(358) Copyist

NARA 466

L | 3 | U.S.C.T.

Samuel Lewis

Corp'l, Co. H, 3 Reg't U. S. Col'd Infantry.

Appears on

Company Muster Roll

for Nov. & DEC., 1864.

Present or absent Present

Stoppage, $ ..... 100 for

Due Gov't, $ ..... 100 for

Remarks: Free. Paid $7.00 pr. mo. from enlistment to Feby 29, 1864. Back pay due. App. Corp'l from Pvt. DEC. 5, 1864. See S.O. No 88, Hd Qrs. 3d USCT.

Book mark:

W F Ragan
Copyist

(358)

L | 3 | U.S.C.T.

Samuel Lewis

Corp'l, Co. H, 3 Reg't U. S. Col'd Infantry.

Appears on

Company Muster Roll

for Jan'y & Feb'y, 186 5.

Present or absent Present

Stoppage, $ 2 46/100 for Ord. & Ord. Stores &

$1.14 for clothing, Camp & Garrison Equipage

Due Gov't, $ ..... 100 for .....

Remarks: Free on or before April 19, 1861. Appd Corp'l from Pvt. Dec. 5, 1864. S.O. No 88, Hd Qrs. 3 U.S.C.T. Sergt. from Oct. 26, 1863 to Aug. 10, 1864.

Book mark:

W F Ragan

(358) Copyist

NARA 468

L. | 3 | U.S.C.T.

Samuel Lewis.

Corp'l, Co. H, 3 Reg't U. S. Col'd Infantry.

Appears on

Company Muster Roll

for Mar. & Apr., 1865.

Present or absent Present.

Stoppage, $ 2 40/100 for ord and $1 10/100 for C & G. E.

Due Gov't, $ ...... 100 for ......

Remarks: Sergt. from Oct. 26/63 to Aug. 10/64. Ap'd Corp'l from Priv. Dec. 5/64. Free

Book mark:

Pol
Copyist

(358)

NARA 469

L. | 3 | U.S.C.T.

Samuel Lewis

Corpl, Co. H, 3 Reg't U. S. Col'd Infantry.

Appears on

Company Muster Roll

for May & June, 1865.

Present or absent Present.

Stoppage, $ 2.67/100 for Ord & $1.14/100 for C & G E.

Due Gov't, $ ___ 100 for ___

Remarks: Sergt from Oct. 28/63 to Aug. 10/64. Appt'd Corpl Dec. 5/64. Free on or before Apr. 19/61.

NEXT ROLL ON FILE MUSTER OUT.

Book mark: ___

Pal
Copyist

(358)

L. | 3 | U.S.C.T.

Samuel Lewis.

Corpl, Co. H, 3 Reg't U. S. Col'd Infantry.

Appears on **Co. Muster-out Roll,** dated Jacksonville Fla, Oct. 31, 1865.

Muster-out to date Oct. 31, 1865.

Last paid to June 30, 1865.

Clothing account:

Last settled ....., 186 ; drawn since $ 100

Due soldier $ ..... 100; due U. S. $ 19. 01/100

Am't for cloth'g in kind or money adv'd $ 100

Due U. S. for arms, equipments, &c., $ 6. 00/100

Bounty paid $ none 100; due $ 100. 00/100

Remarks: Private at enrollment. Apptd Corpl Sept. 1/63. Apptd Sergt Oct. 26/63. Reduced to ranks Aug. 10/64. Apptd Corpl Dec. x 1864.
x Roll torn.

Book mark:

Pal

(861) Copyist.

733

Lewis, Thomas

Co. E, 3 U.S. Col'd Inf.

Private | Private

CARD NUMBERS.

1 6257154	26
2 6257275	27
3 6258390	28
4 90609824	29
5	30
6	31
7	32
8	33
9	34
10	35
11	36
12	37
13	38
14	39
15	40
16	41
17	42
18	43
19	44
20	45
21	46
22	47
23	48
24	49
25	50

Book Mark:

See also

NARA 472

G. | 3 | U.S.C.T.

Thomas Law al. Lewis

....., Co. E., 3 Reg't U. S. Col'd Inf.

Appears on

Company Descriptive Book

of the organization named above.

DESCRIPTION.

Age 26 years; height 5 feet 6 inches.

Complexion Brown

Eyes Black; hair Black

Where born Penn.a

Occupation Laborer

ENLISTMENT.

When July 2nd, 186 3.

Where Philad.a Penn.a

By whom Col. Wagner; term 3 y'rs.

Remarks: see Charles Lewis

G. Springsmith

(383y) Copyist.

L | 3 | U.S.C.T.

Thomas Law

Pvt., Co. E, 3 Reg't U. S. Col'd Infantry.

Age 29 years.

Appears on

Company Muster-in Roll

of the organization named above. Roll dated

Phila Pa, Aug 1, 1863.

Muster-in to date July 6, 1863

Joined for duty and enrolled:

When July 6, 1863.

Where Phila Pa

Period 3 years.

Remarks:

File With Thomas Lewis

Book mark:

S. P. York

(356) Copyist.

NARA 474

L | 3 | U.S.C.T.

Thomas Lewis

Pvt., Co. E, 3 Reg't U. S. Col'd Infantry.

Appears on

Company Muster Roll

for Aug. 1 to 31, 1863.

Present or absent

Stoppage, $ 100 for

Due Gov't, $ 100 for

Remarks: Deserter from Camp Wm Penn, but date not noted on morning report Book prior to August 13th 1863.

Book mark:

Sagatt

(858) Copyist

L | 3 | **U.S.C.T.**

Thomas Lewis +

....., Co. E, 3 Reg't U. S. Col'd Infantry.

Appears on **Co. Muster-out Roll,** dated Jacksonville Fla, Oct 31, 186 5.

Muster-out to date ....., 186 .

Last paid to ....., 186 .

Clothing account:

Last settled....., 186 ; drawn since $.....100

Due soldier $.....100; due U. S. $.....100

Am't for cloth'g in kind or money adv'd $.....100

Due U. S. for arms, equipments, &c., $ 100

Bounty paid $.....100; due $.....100

Remarks: A.G.O.

Roll for august 1863

+ Entire entry in Red

Book mark :

---

(861) Joseph Stewart

Copyist.

NARA 476

154

Lewis William Henry

Co F, 3 U.S. Col'd Inf.

Private | Private

CARD NUMBERS.

1	6258447.	26	
2	6258555.	27	
3	6258688.	28	
4	6258766.	29	
5	6258840.	30	
6	6258918.	31	
7	6258992.	32	
8	6259064.	33	
9	6259138.	34	
10	6259214.	35	
11	6259298.	36	
12	6259390.	37	
13	6259468.	38	
14	9061118	39	
15		40	
16		41	
17		42	
18		43	
19		44	
20		45	
21		46	
22		47	
23		48	
24		49	
25		50	

Book Mark:

See also

NARA 477

5744958 P.O. gf.
S-1014618 " "
S. 1468262 Aud W.D.
S. 1564909 Aud. W. D.
S 1568593 Po. Army
S. 1573287 Aud W.D
R. & P. 521702
S 1618466 Aud W.D.
S-2107624 P.O. Dett R.D+O

NARA 478

F. | 3 | U.S.C.T.

Wm. R. Lewis

........, Co. F, 3 Reg't U.S. Col'd Inft.

Appears on

Company Descriptive Book

of the organization named above.

DESCRIPTION.

Age 23 years; height 5 feet 4 inches.

Complexion Black.

Eyes —— ; hair ——

Where born New York N.Y.

Occupation Oil Cloth maker

ENLISTMENT.

When July 11, 1863.

Where Philada Penna

By whom Lt. Col. Wagner; term 3 y'rs.

Remarks: Mustered in by Capt. Sergeant U.S.A. July 11. 1863

R. Springgutt
(383g) Copyist.

L | 3 | U.S.C.T.

William H. Lewis

Pri., Co. F, 3 Reg't U. S. Col'd Infantry.

Age 23 years.

Appears on

Company Muster-in Roll

of the organization named above. Roll dated Philada, Pa., Aug 10, 1863.

Muster-in to date July 11, 1863

Joined for duty and enrolled:

When July 11, 1863.

Where Philadelphia, Pa.

Period 3 years.

Remarks:

Book mark:

Beck

(856) Copyist.

L | 3 | U.S.C.T.

William H. Lewis

Priv., Co. F, 3 Reg't U. S. Col'd Infantry.

Appears on

Company Muster Roll

for Aug 10 to 31, 1863.

Present or absent

Stoppage, $ 100 for

Due Gov't, $ 100 for

Remarks:

Deserted from Camp Wm Penn, Pa, Aug 10 '63

Book mark:

JBeck

Copyist

(358)

L | 3 | U.S.C.T.

William H. Lewis

Pri, Co. F, 3 Reg't U. S. Col'd Infantry.

Appears on

Company Muster Roll

for Nov & Dec, 1863.

Present or absent Present

Stoppage, $ 100 for

Due Gov't, $ 100 for

Remarks: Gained from desertion Dec. 24 '63

Book mark:

Beck

(858) Copyist

L | 3 | U.S.C.T.

William H. Lewis

Priv., Co. F, 3 Reg't U. S. Col'd Infantry.

Appears on

Company Muster Roll

for Jan & Feb, 1864.

Present or absent Present

Stoppage, $ 100 for

Due Gov't, $ 100 for

Remarks: Stopt $30 for apprehension as deserter.

Book mark:

Beck

(858) Copyist

L | 3 | U.S.C.T.

William H. Lewis

Priv., Co. F, 3 Reg't U. S. Col'd Infantry.

Appears on

Company Muster Roll

for Mar & Apr., 1864.

Present or absent Absent

Stoppage, $ 100 for

Due Gov't, $ 100 for

Remarks:
Sick in Hospital
Jacksonville, Fla.
Stop $30 for desertion

Book mark:

Beck

(858) Copyist

L | 3 | U.S.C.T.

William H. Lewis

Pvt., Co. F, 3 Reg't U. S. Col'd Infantry.

Appears on

Company Muster Roll

for May & June, 1864.

Present or absent Present

Stoppage, $ 100 for

Due Gov't, $ 100 for

Remarks:

Book mark:

L. B. Sayre

(858) Copyist

NARA 485

L | 3 | U.S.C.T.

William H Lewis

Pri, Co. F, 3 Reg't U. S. Col'd Infantry.

Appears on

Company Muster Roll

for July & August, 1864

Present or absent Present

Stoppage, $ ____ 100 for ____

Due Gov't, $ ____ 100 for ____

Remarks: Free on or before 19 Apl 1861

Book mark:

C B Sayer
Copyist

(358)

NARA 486

L | 3 | U.S.C.T.

William H Lewis

Prvt, Co. F, 3 Reg't U. S. Col'd Infantry.

Appears on

Company Muster Roll

for Sept & Oct, 1864.

Present or absent Present

Stoppage, $ 48/100 for Ordnance

Due Gov't, $ 100 for

Remarks: Free - Stopd $30.00 for legal apprehension as deserter by order of Brig Genl A H Terry

Book mark:

C B Snyder
Copyist

(858)

NARA 487

L | 3 | U.S.C.T.

William H. Lewis

Pvt, Co. F, 3 Reg't U. S. Col'd Infantry.

Appears on

Company Muster Roll

for Nov & Dec, 1864

Present or absent Present

Stoppage, $ ___ 100 for ___

Due Gov't, $ ___ 100 for ___

Remarks: ~~Free~~ - Stop $30. for legal apprehension for desertion by order Brig Genl A H Terry H.Q. Morris Island S C Dec 28 1863 + Free on or before Apl 19-1861

Book mark: ___

C. B. Senger
Copyist

(358)

NARA 483

L | 3 | U.S.C.T.

William H Lewis

Pri, Co. F, 3 Reg't U. S. Col'd Infantry.

Appears on

Company Muster Roll

for Jany & Feby, 1865.

Present or absent Present

Stoppage, $ 13/100 for ordnance

Due Gov't, $ 100 for

Remarks: Free on or before April 19 1861 - Stop $30. for legal apprehension from desertion by order of Brig Gen. A H Terry Dist HdQrs Morris Island S C December 28-64

Book mark:

C B Sawyer
Copyist

(358)

G | 3 | U.S.C.T.

William H. Lewis

Pvt, Co. F, 3 Reg't U. S. Col'd Infantry.

Appears on

Company Muster Roll

for March & April, 1865.

Present or absent Present

Stoppage, $ 100 for

Due Gov't, $ 100 for

Remarks: Free on or before Apr 19, 1861. Stop $30.00 for legal apprehension for Desertion. By order of Brig Genl Terry.

Book mark:

S. W. Tucker

(358) Copyist

L | 3 | U.S.C.T.

William H. Lewis

Pvt, Co. F, 3 Reg't U. S. Col'd Infantry.

Appears on

Company Muster Roll

for May & June, 1865.

Present or absent Present

Stoppage, $ 100 for

Due Gov't, $ 100 for

Remarks: Stop $30 for Legal Apprehension as Deserter By order of Brig Gen Terry

NEXT ROLL ON FILE MUSTER OUT.

Book mark:

S. W. Tucker

(258) Copyist

NARA 491

L	3	U.S.C.T.

William Henry Lewis

Pvt, Co. F, 3 Reg't U. S. Col'd Infantry.

Appears on **Co. Muster-out Roll,** dated

Jacksonville Fla, Oct 31, 1865.

Muster-out to date Oct 31, 1865.

Last paid to June 30, 1865.

Clothing account:

Last settled ......, 186 ; drawn since $......100

Due soldier $ 2 75/100; due U. S. $......100

Am't for cloth'g in kind or money adv'd $......100

Due U. S. for arms, equipments, &c., $ 6 100

Bounty paid $......100; due $ 100 100

Remarks: Stop $4 92 for C & G. E.

Enrolled as Private

Book mark: V. 225 P. 140-76 - over

S. W. Tucker
Copyist.

(361)

NARA 492

Lewis. Wm. H.

P., Co. F., 3 Reg't U.S.C.T.

1 Enclosures.

Bed Cards	Descriptive Lists
Burial Records	Final Statements
Certs. of Dis. for Discharge	Furloughs
C. M. Charges	Med. Des. Lists
Med. Certificates	Orders

Other papers relating to—

Admission to Hosp'l 1	Furlough
Casualty Sheet (Officer's)	Med. Examination
Confinement	Misc. Information
Contracts	Pay or Clothing
Death or Effects	Personal Reports
Desertions	Rank
Discharge from Hosp'l	Transfer to Hosp'l
Discharge from Service	Transfer to V. R. C.
Duty	Transportation

Sept 29. 65

Wm. H. Lewis,
Co. F, 3 U.S.C.T.

Adm. to Hosp.

Jacksonville

Micanopy Fla.
Sept. 24th 1865

Surgeon A. M. Barnes
Chief Med. Officer
Div. East Fla.

Surgeon

I have the honor to request that Private Wm. H. Lewis Co "F" be admitted to Hospital

Very Respty.
Your Obt. Servt.
H. Porter
Asst. Surg. 3d U.S.C.T.

NARA 495

133

Lincoln Isaac

Co D, 3 U.S. Col'd Inf.

Sergeant | Corporal

CARD NUMBERS.

1	6255959	26	
2	6256076	27	
3	6256158	28	
4	6256237	29	
5	6256315	30	
6	6256363	31	
7	6256438	32	
8	6256514	33	
9	6256649	34	
10	6257095	35	
11	90608910	36	
12		37	
13		38	
14		39	
15		40	
16		41	
17		42	
18		43	
19		44	
20		45	
21		46	
22		47	
23		48	
24		49	
25		50	

Book Mark:

See also

L. | 3 | U.S.C.T.

Isaac Lincoln.

, Co. D, 3 Reg't U. S. Col'd Inf.

Appears on

Company Descriptive Book

of the organization named above.

DESCRIPTION.

Age 21 years; height 5 feet 5 inches.

Complexion Brown

Eyes Black; hair Black

Where born Charles Co. Md.

Occupation Machinist

ENLISTMENT.

When July 4th, 1863.

Where Philad.a Penn.

By whom Lt Col. Wagner, term 3 y'rs.

Remarks:

E. Springsteen

(383y) Copyist.

L | 3 | U.S.C.T.

Isaac Lincoln

Sgt., Co. D, 3 Reg't U. S. Col'd Infantry.

Age 21 years.

Appears on

Company Muster-in Roll

of the organization named above. Roll dated Philada Pa July 26 1863.

Muster-in to date July 4, 1863

Joined for duty and enrolled:

When July 4, 1863.

Where Philadelphia Pa.

Period 3 years.

Remarks:

Book mark:

E. E. Rankin

(356) Copyist.

NARA 498

L | 3 | U.S.C.T.

Isaac Lincoln

Pvt 1, Co. D, 3 Reg't U. S. Col'd Infantry.

Appears on

Company Muster Roll

for July 26 to Aug. 31, 1863.

Present or absent Present

Stoppage, $ 100 for

Due Gov't, $ 100 for

Remarks: Reduced from Sgt. to the ranks by order Lt. Col. Wagner, Aug. 1/63. Due U. S. 1 Canteen .44¢

Book mark:

E. E. Rankin

(358) Copyist

L | 3 | U.S.C.T.

Isaac Lincoln

Pvt., Co. D, 3 Reg't U. S. Col'd Infantry.

Appears on

Company Muster Roll

for Sept & Oct, 1863.

Present or absent Present.

Stoppage, $ 100 for

Due Gov't, $ 100 for

Remarks: Stop for 1 cap bugle

Book mark:

E. L. Rankin

(358) Copyist

L | 3 | U.S.C.T.

Isaac Lincoln

Pvt., Co. D, 3 Reg't U. S. Col'd Infantry.

Appears on

Company Muster Roll

for Nov. & Dec., 1863.

Present or absent Present.

Stoppage, $ 100 for

Due Gov't, $ 100 for

Remarks:

Book mark:

E. E. Rankin

(358) Copyist

L | 3 | U.S.C.T.

Isaac Lincoln

Pvt., Co. D, 3 Reg't U. S. Col'd Infantry.

Appears on

Company Muster Roll

for Jan. & Feb., 1864

Present or absent Present.

Stoppage, $.....100 for .....

.....

Due Gov't, $..... 100 for.....

.....

Remarks:.....

.....

.....

.....

.....

.....

.....

.....

.....

.....

Book mark:.....

E. E. Rankin

Copyist

(358)

NARA 502

L | 3 | U.S.C.T.

Isaac Lincoln

Corp, Co. D, 3 Reg't U. S. Col'd Infantry.

Appears on

Company Muster Roll

for Mch & April, 1864.

Present or absent Present

Stoppage, $ 100 for

Due Gov't, $ 100 for

Remarks: Stop for 1 Canteen
Appointed Mch 13" 1864
Genl O. No 12 by Order
Lt Col. Doubleday

Book mark:

J H F Okeley
Copyist

(358)

NARA 503

L | 3 | U.S.C.T.

Isaac Lincoln

Corp, Co. D, 3 Reg't U. S. Col'd Infantry.

Appears on

Company Muster Roll

for May & June, 1864.

Present or absent Absent

Stoppage, $ 100 for

Due Gov't, $ 100 for

Remarks: Stop for 1 Canteen

Book mark:

J. H. Shirley

(858) Copyist

NARA 504

L | 3 | U.S.C.T.

Isaac Lincoln

Corp, Co. D, 3 Reg't U. S. Col'd Infantry.

Appears on

Company Muster Roll

for July & Aug, 1864.

Present or absent Absent

Stoppage, $ 100 for

Due Gov't, $ 100 for

Remarks: Stp for 1 Canteen
Sick in Hospital
Jacksonville Fla, since
July 7"/64
Free on or before
April 19/61

Book mark:

J H Schindler
Copyist

(858)

NARA 505

L | 3 | U.S.C.T.

Isaac Lincoln

Corp, Co. D, 3 Reg't U. S. Col'd Infantry.

Appears on

Company Muster Roll

for Sept Oct, 1864

Present or absent

Stoppage, $ 100 for

Due Gov't, $ 100 for

Remarks: Stp for 1 Canteen
Died at Genl Hospital
Jacksonville Fla. Sept
25" 1864 by reason of
[illegible]

Book mark:

J. H. Schirley
Copyist

(858)

NARA 586

L | 3 | U.S.C.T.

Isaac Lincoln

Cpl, Co. D, 3 Reg't U. S. Col'd Infantry.

Appears on **Co. Muster-out Roll**, dated

Jacksonville Fla, Oct 31, 1865.

Muster-out to date ...., 186 .

Last paid to ...., 186 .

Clothing account:

Last settled ...., 186 ; drawn since $ 100

Due soldier $ .... 100 ; due U. S. $ 100

Am't for cloth'g in kind or money adv'd $ 100

Due U. S. for arms, equipments, &c., $ 100

Bounty paid $ .... 100 ; due $ 100

Remarks: Died in Hospital at Jacksonville Fla of Ascites Sept. 25/64 - Final statement forward - Sept 25 - 1864.

Book mark: See. 7.S. P-V. 37 P. 25675 (over)

Kugler
Copyist.

(861)

JAN. 19 6257095 1891

V-224-P-87-75

Lincoln, Isaac

Cpl, Co. D, 3 Reg't Wfct.

3 Enclosures.

Bed Cards	Descriptive Lists
Burial Records	Final Statements 2
Certs. of Dis. for Discharge	Furloughs
C. M. Charges	Med. Des. Lists
Med. Certificates	Orders

Other papers relating to—

Admission to Hosp'l	Furlough
Casualty Sheet (Officer's)	Med. Examination
Confinement	Misc. Information
Contracts	Pay or Clothing
Death or Effects	Personal Reports
Desertions	Rank
Discharge from Hosp'l	Transfer to Hosp'l
Discharge from Service	Transfer to V. R. C.
Duty	Transportation

A.G.O.
Des. list sent 2d Auditor,
R

Co. D

25.

FINAL STATEMENT

OF

Corporal Isaac Lincoln

3d Reg't of US Colored Troops

VOLUNTEERS.

Died Sept 25th 1864

NOTE 1.—*Two* of these certificates (or duplicates) are to be given to each volunteer soldier who may be discharged previously to the discharge of his company, that he may at once receive from the Paymaster the pay, &c., due him, and the captain or other officer commanding the company will certify to the act of the delivery of the duplicate certificates; on these certificates the Soldier is "entitled to" his *discharge*, and should also present his discharge to the Paymaster to have the payment endorsed on it. The discharge is to be given back to the Soldier by the Paymaster; the latter only retaining as his voucher the duplicate certificates.

NOTE 2.—If the Soldier is entitled to pay for the use of his horse, the Company Commander will certify to that fact, and also to the time he has pay due for having been so mounted on his own horse.

NOTE 3.—Amounts due the Sutler and Laundress must be entered on the Muster Roll on which the death, desertion, &c., is reported, as well as on the final statement, otherwise the amount cannot be collected from the United States.

NOTE 4.—This blank will be used for deceased volunteers as well as others.

ADJUTANT GENERAL'S OFFICE.
Octo 19" 1864.
Duplicate with Inventory sent 2d Auditor.

RECEIVED ADJUTANT GEN'S OFFICE
OCT 18 1864

Entd. L. C. Roll C
Lent 8

NARA 516

I certify, on honor, that Isaac Simeon a Corporal of Captain Lovett Brown Company (D) of the 3d Regiment of US Colored VOLUNTEERS, of the State of Pennsylvania, born in Charles County State of Maryland, aged 21 years; 5 feet 5 inches high; Brown complexion, Black eyes, Black hair, and by occupation a Machinist, having joined the company on its original organization at Philadelphia, and enrolled in it at the muster into the service of the United States at Philadelphia, on the Fourth day of July, 1863, (or was mustered in service ~~as a recruit~~, by Captain Sergeant, at Phila., on the Fourth day of July, 1863, to serve in the Regiment,) for the term of Three Years: and having served **HONESTLY** and **FAITHFULLY** with his Company in the Field to the present date, is now entitled to a **DISCHARGE** by reason of Death Caused by ascites

The said Corporal Isaac Simeon was last paid by Paymaster Major Sothman to include the 29th day of February, 1864, and has pay due him from that time to the present date; he is entitled to pay and subsistence for **TRAVELING** to place of enrollment and whatever other allowances are authorized to volunteer soldiers, or militia, so discharged. He has received ______ $\frac{}{100}$ dollars, advanced by the United States on account of **CLOTHING**.

There is to be stopped from him, on account of the State of ______, or other authorities for **CLOTHING**, &c., received on entering service, ______ $\frac{}{100}$ dollars; also, for expenses of SUBSISTENCE for TRAVELING from place of enrollment to the place of rendezvous, amounting to ______ $\frac{}{100}$ dollars: and on account of the United States for **EXTRA CLOTHING** received in kind from ______ and for other stoppages, viz: ______ amounting to ______ $\frac{}{100}$ dollars; and he has been SUBSISTED for TRAVELING to his place of enrollment, up to the ______, 186 .

He is indebted to ______, **SUTLER**, ______ $\frac{}{100}$ dollars.

He is indebted to ______, **LAUNDRESS**, ______ $\frac{}{100}$ dollars.

Given in Duplicate, at Jacksonville Fla, this 25 day of September, 1864

______

[A. G. O. No. 95.]

Asst Surg 127 Regt
~~Commanding Company~~.
In Charge Gen Hospital

NARA 511

A.G.O.
Des. list sent 2d Auditor.
R

ADJUTANT GENERAL'S OFFICE.
Octo 19" 1864.
Duplicate with Inventory sent 2d Auditor.

Co. D

25.

FINAL STATEMENT

OF

Corporal Isaac Lincoln

3d Reg't of US Colored Troops

VOLUNTEERS.

Died Sept 25th 1864

NOTE 1.—*Two* of these certificates (or duplicates) are to be given to each volunteer soldier who may be discharged previously to the discharge of his company, that he may at once receive from the Paymaster the pay, &c., due him, and the captain or other officer commanding the company will certify to the act of the delivery of the duplicate certificates; on these certificates the Soldier is "entitled to" his *discharge*, and should also present his discharge to the Paymaster to have the payment endorsed on it. The discharge is to be given back to the Soldier by the Paymaster; the latter only retaining as his voucher the duplicate certificates.

NOTE 2.—If the Soldier is entitled to pay for the use of his horse, the Company Commander will certify to that fact, and also to the time he has pay due for having been so mounted on his own horse.

NOTE 3.—Amounts due the Sutler and Laundress must be entered on the Muster Roll on which the death, desertion, &c., is reported, as well as on the final statement, otherwise the amount cannot be collected from the United States.

NOTE 4.— This blank will be used for deceased volunteers as well as others.

RECEIVED. OCT 18 1864 ADJUTANT GEN'L'S OFFICE

Entd. L.C. Bof C
Dent B

NARA 512

I certify, on honor, that Isaac Lincoln a Corporal of Captain Scott Bruns Company (D) of the 3d Regiment of US Colored VOLUNTEERS, of the State of Pennsylvania, born in Charles County State of Maryland, aged 21 years; 5 feet 5 inches high; Brown complexion, Black eyes, Black hair, and by occupation a Machinist, having joined the company on its original organization at Philadelphia, and enrolled in it at the muster into the service of the United States at Philadelphia, on the Fourth day of July, 1863, (~~or~~ was mustered in service ~~as a recruit~~, by Captain Sergeant, at Phila, on the Fourth day of July, 1863, to serve in the Regiment,) for the term of Three Years; and having served **HONESTLY** and **FAITHFULLY** with his Company in the field to the present date, is now entitled to a **DISCHARGE** by reason of Death Camp Syp. ascites (Died Sept 25" 1864 see Inventory)

The said Corporal Isaac Lincoln was last paid by Paymaster Major Jackson to include the twenty ninth day of February, 1864, and has pay due him from that time to the present date; he is entitled to pay and subsistence for **TRAVELING** to place of enrollment and whatever other allowances are authorized to volunteer soldiers, or militia, so discharged. He has received ______ $\frac{}{100}$ dollars, advanced by the United States on account of **CLOTHING.**

There is to be stopped from him, on account of the State of ______, or other authorities for **CLOTHING**, &c., received on entering service, ______ $\frac{}{100}$ dollars; also, for expenses of SUBSISTENCE for TRAVELING from place of enrollment to the place of rendezvous, amounting to ______ $\frac{}{100}$ dollars: and on account of the United States for **EXTRA CLOTHING** received in kind from 24.01. ~~and for other stoppages, viz:~~

______ amounting to ______ $\frac{}{100}$ dollars; and he has been SUBSISTED for TRAVELING to his place of enrollment, up to the ______, 186 .

He is indebted to ______, **SUTLER**, ______ $\frac{}{100}$ dollars.

He is indebted to ______, **LAUNDRESS**, ______ $\frac{}{100}$ dollars.

Given in Duplicate, at Jacksonville Fla, this 28th day of September, 1864.

P. Beeler
Asst Surg 127 NYV
~~Commanding Company.~~
In Charge Gen Hospital

[A. G. O. No. 95.]

NARA 513

INVENTORY OF THE EFFECTS

OF

Cupnau Isaac Sinclair

Late of Company D

3d *Reg't of* US Colored

Volunteers, who died at Jacksonville Fla

on the 25 *day of* September 1864

NARA 514

Inventory of the effects of Isaac Simpson late a Corporal of Captain Loritz Brown Company D of the 3d Regiment of US Colored Volunteers, who was enrolled as a Corporal at Philadelphia in the State of Pennsylvania on the 4th day of July 1863, and mustered into the service of the United States as a Corporal on the 4th day of July 1863, at Phila. in Company D, 3d Regiment of US Colored Volunteers, to serve 3 years or during the war; he was born in Charles County in the State of Maryland; he was 21 years of age, 5 feet 5 inches high, Brown complexion, Black eyes, Black hair, and by occupation, when enrolled, a Machinist; he died in USA Genl. Hospital, at Jacksonville Florida on the 25th day of September 1864, by reason of Ascitis

INVENTORY.

Articles.	No.	Articles.	No.	Articles.	No.
Hats		Pairs trowsers		Knapsacks	1
Caps	1	Pairs flannel drawers	1	Rubber Blanket	1
Forage caps		Pairs cotton drawers			
Great coats		Flannel shirts			
Uniform coats	1	Cotton shirts			
Uniform jackets		Pairs boots			
Flannel sack coats		Pairs shoes			
Blouses		Pairs socks	1	Money. Specie	$ —
Stable frocks		Blankets Woolen	1		
Fatigue overalls		Haversacks		Money. Notes	$

I certify, on honor, that the above inventory comprises all the effects of Corporal Isaac Simpson, deceased, and that the effects are in the hands of Asst Surg 127 USCT in charge at USA Genl. Hospital Jacksonville Fla to be disposed of by a Council of Administration.

(DUPLICATES.)

Station: Jacksonville Florida

Date: September 26 1864

[A. G. O. No. 104.]

Asst Surg 127 USCT
~~Commanding the Company.~~
In charge USA Genl. Hospital

NARA 515

FINAL STATEMENT

OF

Corporal Isaac Sinclair

3d Reg't of NS Colored

VOLUNTEERS.

NOTE 1.—*Two* of these certificates (or duplicates) are to be given to each volunteer soldier who may be discharged previously to the discharge of his company, that he may at once receive from the Paymaster the pay, &c., due him, and the captain or other officer commanding the company will certify to the act of the delivery of the duplicate certificates; on these certificates the Soldier is "entitled to" his *discharge*, and should also present his discharge to the Paymaster to have the payment endorsed on it. The discharge is to be given back to the Soldier by the Paymaster; the latter only retaining as his voucher the duplicate certificates.

NOTE 2.—If the Soldier is entitled to pay for the use of his horse, the Company Commander will certify to that fact, and also to the time he has pay due for having been so mounted on his own horse.

NOTE 3.—Amounts due the Sutler and Laundress must be entered on the Muster Roll on which the death, desertion, &c., is reported, as well as on the final statement, otherwise the amount cannot be collected from the United States.

NOTE 4.– This blank will be used for deceased volunteers as well as others.

NARA 516

I certify, on honor, that Isaac Simeon a Corporal of Captain Lovett Brown Company (D) of the 3d Regiment of US Colored VOLUNTEERS, of the State of Pennsylvania, born in Charles County State of Maryland, aged 21 years; 5 feet 5 inches high; Brown complexion, Black eyes, Black hair, and by occupation a Machinist, having joined the company on its original organization at Philadelphia, and enrolled in it at the muster into the service of the United States at Philadelphia, on the Fourth day of July, 1863, (or was mustered in service ~~as a recruit~~, by Captain Sergeant, at Phila., on the Fourth day of July, 1863, to serve in the Regiment,) for the term of Three Years: and having served **HONESTLY** and **FAITHFULLY** with his Company in the Field to the present date, is now entitled to a **DISCHARGE** by reason of Death Caused by Ascites

The said Corporal Isaac Simeon was last paid by Paymaster Major [illegible] to include the 29th day of February, 1864, and has pay due him from that time to the present date; he is entitled to pay and subsistence for **TRAVELING** to place of enrollment and whatever other allowances are authorized to volunteer soldiers, or militia, so discharged. He has received ______ $\frac{}{100}$ dollars, advanced by the United States on account of **CLOTHING.**

There is to be stopped from him, on account of the State of ______, or other authorities for **CLOTHING**, &c., received on entering service, ______ $\frac{}{100}$ dollars; also, for expenses of SUBSISTENCE for TRAVELING from place of enrollment to the place of rendezvous, amounting to ______ $\frac{}{100}$ dollars: and on account of the United States for **EXTRA CLOTHING** received in kind from ______ and for other stoppages, viz:

______

______ amounting to ______ $\frac{}{100}$ dollars; and he has been SUBSISTED for TRAVELING to his place of enrollment, up to the ______, 186 .

He is indebted to ______, **SUTLER**, ______ $\frac{}{100}$ dollars.

He is indebted to ______, **LAUNDRESS**, ______ $\frac{}{100}$ dollars.

Given in Duplicate, at Jacksonville Fla., this 25 day of September, 1864.

______

[illegible] Surg [illegible]
~~Commanding Company~~.
[illegible] in Charge [illegible] Genl. Hospital

[A. G. O. No. 95.]

NARA 817

130

Lisles George

Co E, 3 U.S. Col'd Inf.

Private Private

CARD NUMBERS.

1	6 2 5	1 5 7	26
2	6 2 5	2 3 7	27
3	6 2 5	3 2 9	28
4	6 2 5	4 1 0	29
5	6 2 5	4 8 4	30
6	6 2 5	5 6 8	31
7	6 2 5	6 5 1	32
8	6 2 5	7 3 4	33
9	6 2 5	8 1 0	34
10	6 2 5	8 9 2	35
11	6 2 5	9 6 9	36
12	6 2 5	8 0 4	37
13	6 2 5	8 1 4 6	38
14	6 2 5	8 2 3 3	39
15	6 2 5	8 3 2 0	40
16	9060987		41
17			42
18			43
19			44
20			45
21			46
22			47
23			48
24			49
25			50

Book Mark:

See also

S. 684770. P.G. off-
S_ 2202023 column

NARA 519

G.	3	U.S.C.T.

George Lisle

............, Co. E, 3 Reg't U. S. Col'd Inf.

Appears on

Company Descriptive Book

of the organization named above.

DESCRIPTION.

Age 28 years; height 5 feet 9 inches.

Complexion Brown

Eyes Black; hair Black.

Where born Bedford, Penn^a^.

Occupation Farmer

ENLISTMENT.

When July 8th, 1863.

Where Philad^a^ Penn^a^.

By whom Col. Wagner; term 3 y'rs.

Remarks:

(383g) R. Springsguth Copyist.

L | 3 | U.S.C.T.

George Lisles

Priv., Co. E., 3 Reg't U. S. Col'd Infantry.

Age 28 years.

Appears on

Company Muster-in Roll

of the organization named above. Roll dated

Phila Pa, Aug 1, 1863.

Muster-in to date July 8, 1863

Joined for duty and enrolled:

When July 8, 1863.

Where Phila Pa

Period 3 years.

Remarks:

Book mark:

S O York

(356) Copyist.

L | 3 | U.S.C.T.

George Lisle

Pvt., Co. E, 3 Reg't U. S. Col'd Infantry.

Appears on

Company Muster Roll

for Aug. 1 to 31, 1863.

Present or absent Present.

Stoppage, $ 100 for

Due Gov't, $ 100 for

Remarks:

Book mark:

Dagnitt

(858) Copyist

L | 3 | U.S.C.T.

George Lisles

Priv., Co. E, 3 Reg't U. S. Col'd Infantry.

Appears on

Company Muster Roll

for Sept & Oct, 1863.

Present or absent Present

Stoppage, $ 100 for

Due Gov't, $ 100 for

Remarks:

Book mark:

S. P. York

Copyist

(858)

L | 3 | U.S.C.T.

George Lisle

Priv., Co. E, 3 Reg't U. S. Col'd Infantry.

Appears on

Company Muster Roll

for Nov & Dec, 1863.

Present or absent Present

Stoppage, $ 100 for

Due Gov't, $ 100 for

Remarks:

Book mark:

S O York

(858) Copyist

L | 3 | U.S.C.T.

George Leslie

Priv., Co. E, 3 Reg't U. S. Col'd Infantry.

Appears on

Company Muster Roll

for Jany & Feby, 1864

Present or absent Present

Stoppage, $ 100 for

Due Gov't, $ 100 for

Remarks:

Filed with George Leslie

Book mark:

S O York

Copyist

(858)

L | 3 | U.S.C.T.

George Lisle

Priv., Co. E, 3 Reg't U. S. Col'd Infantry.

Appears on

Company Muster Roll

for March & April, 1864.

Present or absent Present

Stoppage, $ 100 for

Due Gov't, $ 100 for

Remarks Stole Knapsack wrench & wiper

Book mark:

S. P. York

(858) Copyist

NARA 526

L | 3 | U.S.C.T.

George Lisle

Pvt, Co. E, 3 Reg't U. S. Col'd Infantry.

Appears on

Company Muster Roll

for May & June, 1864

Present or absent Present

Stoppage, $ 100 for

Due Gov't, $ 100 for

Remarks:

Book mark:

S W Forrest
Copyist

(858)

NARA 527

L | 3 | U.S.C.T.

George Lisle

Pri, Co E, 3 Reg't U.S. Col'd Infantry.

Appears on

Company Muster Roll

for July & Aug, 1864

Present or absent Present

Stoppage, $ .... 100 for ....

Due Gov't, $ .... 100 for ....

Remarks: Free on or before April 19 1861

Book mark: ....

S W Forrest
Copyist

(858)

NARA 328

G | 3 | U.S.C.T.

George Lisle

Pvt, Co E, 3 Reg't U. S. Col'd Infantry.

Appears on

Company Muster Roll

for Sept & Oct, 1864

Present or absent present

Stoppage, $ 100 for

Due Gov't, $ 100 for

Remarks Paid $7 per month from enlistment to June 30/64. back pay due

Book mark:

S W Jones

(858)

Copyist

NARA 529

L | 3 | U.S.C.T.

George Lisle

Priv, Co. E, 3 Reg't U. S. Col'd Infantry.

Appears on

Company Muster Roll

for Nov & Dec, 1864.

Present or absent Present

Stoppage, $ .... 100 for ....

Due Gov't, $ .... 100 for ....

Remarks: Paid $7. pr Month from enlistment to April 30/64 back pay due

Book mark: ....

S W Fones
Copyist

(858)

NARA 530

L | 3 | U.S.C.T.

George Lisle

Pvt., Co. E, 3 Reg't U. S. Col'd Infantry.

Appears on

Company Muster Roll

for Jany & Feby, 1865

Present or absent Present

Stoppage, $ ---- 100 for ----

Due Gov't, $ ---- 100 for ----

Remarks: Paid $7 per month from enlistment to April 30/64. back pay due

Book mark:

S W Forrest
Copyist

(858)

L | 3 | U.S.C.T.

George Lisle

Pvt., Co. E, 3 Reg't U. S. Col'd Infantry.

Appears on

Company Muster Roll

for March & April, 1865.

Present or absent Present

Stoppage, $ ..... 100 for .....

Due Gov't, $ ..... 100 for .....

Remarks: Paid $7 per mo from enlistment to Apr. 30, 64. back pay due.

Book mark:

(858) Joseph Stewart

Copyist

NARA 532

L | 3 | U.S.C.T.

George Lisle

Pri., Co. E, 3 Reg't U. S. Col'd Infantry.

Appears on

Company Muster Roll

for May & June, 1865

Present or absent Present

Stoppage, $ ..... 100 for .....

Due Gov't, $ ..... 100 for .....

Remarks: Paid $7 per month from enlistment to Apr 30" 64. Back pay due.

Book mark: .....

W L Harrison
Copyist

(858)

L. | 3 | U.S.C.T.

George Lisle

Pvt., Co. E, 3 Reg't U. S. Col'd Infantry.

Appears on

Company Muster Roll

for July & Aug, 186 5.

Present or absent Present

Stoppage, $ 100 for

Due Gov't, $ 100 for

Remarks:

Book mark:

(858) Joseph Stewart

Copyist

L | 3 | U.S.C.T.

George Lisle

Priv., Co. E, 3 Reg't U. S. Col'd Infantry.

Appears on **Co. Muster-out Roll,** dated Jacksonville Fla., Oct 31, 186 5.

Muster-out to date Oct 31, 186 5.

Last paid to June 30, 186 5.

Clothing account:

Last settled....., 186 ; drawn since $..... 100

Due soldier $ 23 13/100; due U. S. $..... 100

Am't for cloth'g in kind or money adv'd $..... 100

Due U. S. for arms, equipments, &c., $ 6 00/100

Bounty paid $..... 100; due $..... 100

Remarks: Private from enlistment. Stoppage for Camp and Garrison Equipage $ 7.45

Book mark:

(361) Joseph Stewart

Copyist.

737

Liles James M.

Co E, 3 U.S. Col'd Inf.

Private | Private

CARD NUMBERS.

1	6 2 5 7 1 5 8	26	
2	6 2 5 7 2 3 8	27	
3	6 2 5 7 3 3 0	28	
4	6 2 5 7 4 1 1	29	
5	6 2 5 7 4 8 5	30	
6	6 2 5 7 5 6 9	31	
7	6 2 5 7 6 5 2	32	
8	6 2 5 7 7 3 5	33	
9	6 2 5 7 8 1 1	34	
10	6 2 5 7 8 9 3	35	
11	6 2 5 7 9 7 0	36	
12	6 2 5 8 0 4 8	37	
13	6 2 5 8 1 3 9	38	
14	6 2 5 8 2 3 2	39	
15	6 2 5 8 3 1 9	40	
16	9060988	41	
17		42	
18		43	
19		44	
20		45	
21		46	
22		47	
23		48	
24		49	
25		50	

Book Mark:

See also

NARA 536

S1434175 - P.O. aff
S1438128 " "

NARA 537

G. | 3 | U.S.C.T.

James M. Lisle

, Co. E, 3 Reg't U. S. Col'd Inf.

Appears on

Company Descriptive Book

of the organization named above.

DESCRIPTION.

Age 20 years; height 6 feet — inches.

Complexion Brown

Eyes Black; hair Black

Where born Bedford, Penna.

Occupation Porter

ENLISTMENT.

When July 8th, 1863.

Where Philada Penna

By whom Col. Wagner; term 3 y'rs.

Remarks:

(383g) R. Springsguth Copyist.

L | 3 | U.S.C.T.

James M Lisles

Pvt., Co. E, 3 Reg't U. S. Col'd Infantry.

Age 20 years.

Appears on

Company Muster-in Roll

of the organization named above. Roll dated Phila Pa, Aug 1, 1863.

Muster-in to date July 8, 1863

Joined for duty and enrolled:

When July 8, 1863.

Where Phila Pa

Period 3 years.

Remarks:

Book mark:

S O York

Copyist.

(356)

NARA 329

L. | 3 | U.S.C.T.

James M. Lisle

Pvt., Co. E, 3 Reg't U. S. Col'd Infantry;

Appears on

Company Muster Roll

for Aug. 1 to 31, 1863.

Present or absent Present.

Stoppage, $ 100 for

Due Gov't, $ 100 for

Remarks:

Book mark:

Daggett

(858) Copyist

L | 3 | U.S.C.T.

James M. Lisles

Pvt., Co. E, 3 Reg't U. S. Col'd Infantry.

Appears on

Company Muster Roll

for Sept & Oct, 1863.

Present or absent Present

Stoppage, $ 100 for

Due Gov't, $ 100 for

Remarks:

Book mark:

S. P. York

(858) Copyist

L | 3 | U.S.C.T.

James M Lisle

Ass't, Co. E, 3 Reg't U. S. Col'd Infantry.

Appears on

Company Muster Roll

for Nov & Dec, 1863.

Present or absent Present

Stoppage, $ 100 for

Due Gov't, $ 100 for

Remarks:

Book mark:

D. O. York

Copyist

(858)

NARA 542

L | 3 | U.S.C.T.

James M. Leslie

Priv., Co. E, 3 Reg't U. S. Col'd Infantry.

Appears on

Company Muster Roll

for Jany & Feby, 1864.

Present or absent Present

Stoppage, $ .... 100 for ....

Due Gov't, $ .... 100 for ....

Remarks: ....

File with James M Leslie

Book mark: ....

S. P. York
Copyist

(358)

NARA 543

L	3	U.S.C.T.

James W. Lisle

Pri , Co. E, 3 Reg't U. S. Col'd Infantry.

Appears on

Company Muster Roll

for March & April, 1864.

Present or absent Present

Stoppage, $ .... 100 for ....

Due Gov't, $ .... 100 for ....

Remarks Stoppage Shelter Tent Canteen & Gun wiped

Book mark: ....

S. O. York
Copyist

(858)

NARA 544

L | 3 | U.S.C.T.

James W Leisle

Pvr., Co. E, 3 Reg't U.S. Col'd Infantry.

Appears on

Company Muster Roll

for May & June, 1864

Present or absent Present

Stoppage, $ .... 100 for ....

Due Gov't, $ .... 100 for ....

Remarks: Stop for 1 pr Shelter tent, 1 Canteen 1 Wiper

Book mark: ....

S W Forrest
Copyist.

(858)

NARA 545

Y	3	U.S.C.T.

James H Lisle

Cpr., Co. E, 3 Reg't U. S. Col'd Infantry.

Appears on

Company Muster Roll

for July & Aug, 1864

Present or absent Present

Stoppage, $ ____ 100 for ____

Due Gov't, $ ____ 100 for ____

Remarks: Free on or before April 19, 1861

Book mark: ____

S W Forrest
Copyist

(858)

NARA 546

L | 3 | U.S.C.T.

James N Lisle

Pvt, Co. E, 3 Reg't U. S. Col'd Infantry.

Appears on

Company Muster Roll

for Sept & Oct, 1864

Present or absent Present

Stoppage, $ 100 for One Wiper

Due Gov't, $ 100 for

Remarks: Paid $7 pr Month from enlistment to April 30/64. back pay due

Book mark:

S W Forrest
Copyist

(858)

E | 3 | U.S.C.T.

James McLisle

Pvt, Co. E, 3 Reg't U. S. Col'd Infantry.

Appears on

Company Muster Roll

for Nov & Dec, 1864

Present or absent Present.

Stoppage, $ 100 for Gun wiper

Due Gov't, $ 100 for

Remarks: Paid $7 per month from enlistment to April 30/64, back pay due

Book mark:

S W Gomes

Copyist

(358)

L | 3 | U.S.C.T.

James McGisse

Pvt, Co. E, 3 Reg't U. S. Col'd Infantry.

Appears on

Company Muster Roll

for Jany & Feby, 186 6

Present or absent Present

Stoppage, $ ..... 100 for .....

Due Gov't, $ ..... 100 for .....

Remarks: Paid $7 per month from enlistment to April 30/64, back pay due

Book mark: .....

S W Jones

Copyist

(858)

NARA 349

L | 3 | U.S.C.T.

James N. Lisle
Pvt, Co. E, 3 Reg't U. S. Col'd Infantry.

Appears on

Company Muster Roll

for March & April, 1865.

Present or absent Present

Stoppage, $ 100 for

Due Gov't, $ 100 for

Remarks: Paid $7 per mo. from enlistment to Apr. 30, 64 back pay due

Book mark:

Joseph Stewart

(858) Copyist

NARA 558

L | 3 | U.S.C.T.

James W. Lisle

Pri., Co. E, 3 Reg't U. S. Col'd Infantry.

Appears on

Company Muster Roll

for May & June, 1865.

Present or absent Present

Stoppage, $ ...... 100 for

Due Gov't, $ ...... 100 for

Remarks: Paid $7 per month from enlistment to Apr 30" 64. back pay due

Book mark:

W L Harrison
(858) Copyist

L | 3 | U.S.C.T.

James M. Lisle

Pvt, Co. E, 3 Reg't U. S. Col'd Infantry.

Appears on

Company Muster Roll

for July & Aug, 186 5.

Present or absent absent

Stoppage, $ 100 for

Due Gov't, $ 100 for

Remarks: Teamster Quartermasters Dept Jacksonville

Book mark:

(858) Joseph Stewart Copyist

L | 3 | U.S.C.T.

James M. Lisle

Pvt, Co. E, 3 Reg't U. S. Col'd Infantry.

Appears on **Co. Muster-out Roll,** dated Jacksonville Fla, Oct 31, 1865.

Muster-out to date Oct 31, 1865.

Last paid to June 30, 1865.

Clothing account:

Last settled ....., 186 ; drawn since $ 100

Due soldier $ ..... 04/100; due U. S. $ 100

Am't for cloth'g in kind or money adv'd $ 100

Due U. S. for arms, equipments, &c., $ 6 43/100 +

Bounty paid $ ..... 100; due $ 100

Remarks: Private from enlistment.

+ as it appears on rolls

Book mark:

Joseph Stewart

(361) Copyist.

738

Lockhold Thomas B.

Co D, 3 U.S. Col'd Inf.

Sergeant	Sergeant

CARD NUMBERS.

1	26
2	27
3 See Rockhold	Thomas
4	29
5	30
6	31
7	32
8	33
9	34
10	35
11	36
12	37
13	38
14	39
15	40
16	41
17	42
18	43
19	44
20	45
21	46
22	47
23	48
24	49
25	50

Book Mark:

See also

NARA CSS

739

Lockwood, Winson

Co. G, 3 U.S. Col'd Inf.

Private Pinate

CARD NUMBERS.

1	6 2 5 9 5 9 7	26
2	6 2 5 9 6 7 4	27
3	6 2 5 9 7 5 7	28
4	6 2 5 9 8 3 6	29
5	6 2 5 9 9 1 3	30
6	6 2 5 9 9 9 6	31
7	6 2 6 0 0 7 5	32
8	6 2 6 0 1 5 5	33
9	6 2 6 0 2 3 1	34
10	6 2 6 0 3 1 0	35
11	6 2 6 0 3 8 7	36
12	6 2 6 0 4 7 3	37
13	6 2 6 0 5 6 5	38
14	6 2 6 0 6 4 7	39
15	9 0 6 1 2 2 0 7	40
16		41
17		42
18		43
19		44
20		45
21		46
22		47
23		48
24		49
25		50

Book Mark:

See also

NARA 555

[illegible] to County Court Phila. Co. Apl 185[illegible] [illegible] R

L. | 3 | U.S.C.T.

Winson Lockwood

....., Co. G, 3 Reg't U. S. Col'd Inf.

Appears on

Company Descriptive Book

of the organization named above.

DESCRIPTION.

Age 18 years; height 5 feet 5 inches.

Complexion Brown

Eyes Black; hair Black

Where born Chester Penna

Occupation Laborer

ENLISTMENT.

When July 14, 1863.

Where Philada Penna.

By whom Wm. Wagner; term 3 y'rs.

Remarks:

Daggett

(383w) Copyist.

L | 3 | U.S.C.T.

Winson Lockwood

Pvt, Co. G, 3 Reg't U. S. Col'd Infantry.

Age 18 years.

Appears on

Company Muster-in Roll

of the organization named above. Roll dated Philad^a, Pa July 20, 1863.

Muster-in to date July 14, 1863

Joined for duty and enrolled:

When July 14, 1863.

Where Philadelphia, Pa

Period 3 years.

Remarks:

Book mark:

(856) Copyist.

L | 3 | U.S.C.T.

Wimson Lockwood

Pvt, Co. G, 3 Reg't U. S. Col'd Infantry.

Appears on

Company Muster Roll

for July 13/63 to Aug 31, 1863.

Present or absent Present

Stoppage, $ 100 for

Due Gov't, $ 100 for

Remarks:

Book mark:

(858) Copyist

L | 3 | U.S.C.T.

Wilson Lockwood

Pvt, Co. G, 3 Reg't U. S. Col'd Infantry.

Appears on

Company Muster Roll

for Sept & Oct, 186 3

Present or absent Present

Stoppage, $ 100 for

Due Gov't, $ 100 for

Remarks:

Book mark:

W Lockwood

(858) Copyist

L | 3 | U.S.C.T.

Wilson Lockwood

Pvt, Co. G, 3 Reg't U. S. Col'd Infantry.

Appears on

Company Muster Roll

for Nov & Dec, 1863.

Present or absent Present

Stoppage, $ 100 for

Due Gov't, $ 100 for

Remarks:

Book mark:

(858) Copyist

NARA 561

L | 3 | U.S.C.T.

Winson Lockwood

Pvt., Co. G, 3 Reg't U. S. Col'd Infantry.

Appears on

Company Muster Roll

for Jan & Feb, 1864.

Present or absent Absent

Stoppage, $ 100 for

Due Gov't, $ 100 for

Remarks: In Hospital on Hilton Head Island, S.C. since Feb 6, 1864

Book mark:

W. Ross

(858) Copyist

L | 3 | U.S.C.T.

Winson Lockwood

Pvt., Co. G, 3 Reg't U. S. Col'd Infantry.

Appears on

Company Muster Roll

for Mch. & Apl., 1864.

Present or absent Present

Stoppage, $ 100 for

Due Gov't, $ 100 for

Remarks:

Book mark:

Randall

(868) Copyist

L | 3 | U.S.C.T.

Wilson Lockwood

Pvt, Co. G, 3 Reg't U. S. Col'd Infantry.

Appears on

Company Muster Roll

for May & June, 1864.

Present or absent Present

Stoppage, $ 100 for

Due Gov't, $ 100 for

Remarks:

Book mark:

Randall

(858) Copyist

NARA 564

L | 3 | U.S.C.T.

Winson Lockwood

Private, Co. G, 3 Reg't U. S. Col'd Infantry.

Appears on

Company Muster Roll

for July and August, 1864.

Present or absent Present

Stoppage, $ .... 100 for ....

Due Gov't, $ .... 100 for ....

Remarks: Free on or before

ˣ ~~Feby~~ Apr. 19, 1861.

ˣ As it appears on Roll

Book mark: ....

Keefer.
Copyist

(858)

L | - 3 | U.S.C.T.

Stinson Lockwood

Pvt, Co. G, 3 Reg't U. S. Col'd Infantry.

Appears on

Company Muster Roll

for Sept + Oct, 1864.

Present or absent Present

Stoppage, $ 100 for

Due Gov't, $ 100 for

Remarks: Free on or before Apr 19-1861 Paid but $7. per month from date of enlistment to Apr 30-1864 Back pay due

Book mark:

C C Parker

(858) Copyist

L | 3 | U.S.C.T.

Winson Lockwood

Pvt., Co. G, 3 Reg't U. S. Col'd Infantry.

Appears on

Company Muster Roll

for Nov. & Dec., 1864

Present or absent Present

Stoppage, $ 100 for

Due Gov't, $ 100 for

Remarks: Free, on or before April 19th 1861. Paid but $7. per. Mo. from date of Enlistment, to Apr. 30th 1864 Back paydue. Stop for Canteen.

Book mark:

Randall

(858) Copyist

L | 3 | U.S.C.T.

Winson Lockwood

Pvt., Co. G, 3 Reg't U. S. Col'd Infantry.

Appears on

Company Muster Roll

for Jan. & Feb., 1865.

Present or absent Present

Stoppage, $ 100 for

Due Gov't, $ 100 for

Remarks: Free, on or before April 19th 1861. Paid but $7. per. Mo. from date of Enlistment, to Apr. 30th 1864. Back pay due, Stop for Cantecin.

Book mark:

Randall

(858) Copyist

L | 3 | U.S.C.T.

Winson Lockwood.

Ind., Co. G, 3 Reg't U. S. Col'd Infantry.

Appears on

Company Muster Roll

for March & Apr., 1865.

Present or absent Present.

Stoppage, $ 100 for

Due Gov't, $ 100 for

Remarks: Paid but $7 per month from date of enlistment to Apr. 30, 1864. Back pay due. Stop for canteen.
Free April 19, 1861.

Book mark:

Sandoz
Copyist

(858)

L | 3 | U.S.C.T.

Winson Lockwood

Pvt., Co. G, 3 Reg't U. S. Col'd Infantry.

Appears on

Company Muster Roll

for May and June, 1865.

Present or absent Present

Stoppage, $ 100 for

Due Gov't, $ 100 for

Remarks: Free. Paid but $7 per mo. from date of Enlistment to Apr. 30, 1864. Back pay due. Stop Canteen.

NEXT ROLL ON FILE MUSTER OUT.

Book mark:

Leary

(858) Copyist

G. | 3 | U.S.C.T.

Winson Lockwood

Pvt., Co. G, 3 Reg't U. S. Col'd Infantry.

Appears on **Co. Muster-out Roll,** dated Jacksonville Fla., Oct. 31, 1865.

Muster-out to date Oct. 31, 1865.

Last paid to June 30, 1865.

Clothing account:

Last settled....., 186 ; drawn since $.....100

Due soldier $.....100; due U. S. $ 13 73 100

Am't for cloth'g in kind or money adv'd $.....100

Due U. S. for arms, equipments, &c., $.....100

Bounty paid $.....100; due $ 100 100

Remarks: Stop for Ordnance $6.00.

Private from enlistment.

Book mark:

J. F. Stearns

(361) Copyist.

Lodine George

Co B, 3 U.S. Col'd Inf.

Corporal | Private

CARD NUMBERS.

1	6253558	26	
2	6253641	27	
3	6253762	28	
4	6253845	29	
5	6253922	30	
6	6254004	31	
7	6254080	32	
8	6254158	33	
9	6254236	34	
10	6254301	35	
11	6254394	36	
12	6254480	37	
13	6254575	38	
14	6254660	39	
15	9060642	40	
16		41	
17		42	
18		43	
19		44	
20		45	
21		46	
22		47	
23		48	
24		49	
25		50	

Book Mark:

See also

L | 3 | U.S.C.T.

George Lodine

, Co. B, 3 Reg't U. S. Col'd Inf.

Appears on

Company Descriptive Book

of the organization named above.

DESCRIPTION.

Age 49 years; height 5 feet 5 inches.

Complexion Black

Eyes brown; hair black

Where born Chester Co. Penn

Occupation Laborer

ENLISTMENT.

When June 30, 186 .

Where Philadelphia

By whom Lt Col Wagner, term 3 y'rs.

Remarks:

Horatio

(383g) Copyist.

L. | 3 | U.S.C.T.

George Lodine

Corp, Co. B, 3 Reg't U. S. Col'd Infantry.

Age 40 years.

Appears on

Company Muster-in Roll

of the organization named above. Roll dated Phil. Pa., Aug 7, 1863.

Muster-in to date June 30, 1863.

Joined for duty and enrolled:

When June 30, 1863.*

Where Phil. Pa.

Period 3 years.*

Remarks:

*☞ Muster-in roll shows enrollment of all men of this company as of same date and place. See enrollment on subsequent card or cards.

Book mark:

Martin

(356e) Copyist.

L | 3 | U.S.C.T.

George Lodine

Corp. Co. B, 3 Reg't U. S. Col'd Infantry.

Appears on

Company Muster Roll

for July & Aug, 1863.

Joined for duty and enrolled:

When June 30, 1863.*

Where Phila. Pa.*

Period 3 years.*

Present or absent Present

Stoppage, $ 100 for

Due Gov't $ 100 for

Remarks: Apptd Corp. July 4, 1863. reduced to ranks July 29, 1863.

* See enrollment on card from muster-in roll.

Book mark:

Martin

(858c) Copyist.

L | 3 | U.S.C.T.

George Lodine

Priv., Co. B, 3 Reg't U. S. Col'd Infantry.

Appears on

Company Muster Roll

for Sept Oct, 1863.

Joined for duty and enrolled:

When June 30, 1863.*

Where Phil. Pa *

Period 3 years.*

Present or absent Present

Stoppage, $ 100 for

Due Gov't $ 100 for

Remarks: Pay due from date of original muster.

* ☞ See enrollment on card from muster-in roll.

Book mark:

Martin

(358c) Copyist.

L. | 3 | U.S.C.T.

George Lodine

Priv., Co. B, 3 Reg't U. S. Col'd Infantry.

Appears on

Company Muster Roll

for Nov. & Dec, 1863.

Joined for duty and enrolled:

When June 30, 1863*

Where Phil. Pa.*

Period 3 years.*

Present or absent Present

Stoppage, $ 100 for

Due Gov't $ 100 for

Remarks:

* ☞ See enrollment on card from muster-in roll.

Book mark:

Martin

(858c) Copyist.

NARA 577

L. | 3 | U.S.C.T.

George Lodine

Priv., Co. B, 3 Reg't U. S. Col'd Infantry.

Appears on

Company Muster Roll

for Jan & Feb, 1864.

Joined for duty and enrolled:

When June 30, 1863.*

Where Phil. Pa.,*

Period 3 years.*

Present or absent Present

Stoppage, $ 100 for

Due Gov't $ 100 for

Remarks:

* ☞ See enrollment on card from muster-in roll.

Book mark:

Martin

(358c) Copyist.

L | 3 | U.S.C.T.

George Lodine

Pvt., Co. B, 3 Reg't U. S. Col'd Infantry.

Appears on

Company Muster Roll

for Mar & Apr, 1864.

Joined for duty and enrolled:

When June 30, 1863.*

Where Philadelphia Pa.*

Period 3 years.*

Present or absent Present

Stoppage, $ ..... 100 for .....

Due Gov't, $ ..... 100 for .....

Remarks: On daily duty in R. & M. since Apr 29/64 by S.O. No 15 Hd. Qrs. 3rd U.S.C.T. dated Apr. 29. 1864

* See enrollment on card from muster-in roll.

Book mark:

J. McFarly

(358c) Copyist.

NARA 579

L | 3 | U.S.C.T.

George Lodine

Priv ; Co. B, 3 Reg't U. S. Col'd Infantry.

Appears on

Company Muster Roll

for May & June, 1864.

Joined for duty and enrolled:

When June 30, 1863.*

Where Philad. Pa *

Period 3 years.*

Present or absent Present

Stoppage, $ 100 for

Due Gov't, $ 100 for

Remarks: On daily duty in R.Q.M. Dept. since Apr. 29/64 by S.O. No 15 Hd Qrs. 3rd U.S.C.T. dated Jacksonville Fla. Apr. 29/64

* See enrollment on card from muster-in roll.

Book mark:

W Washington
Copyist.

(358c)

L | 3 | U.S.C.T.

George Lodine

Pvt., Co. B, 3 Reg't U. S. Col'd Infantry.

Appears on

Company Muster Roll

for May June July & Aug., 1864.

Joined for duty and enrolled:

When June 30, 186 3*

Where Philad. Pa *

Period 3 years.*

Present or absent Present

Stoppage, $ 100 for

Due Gov't $ 100 for

Remarks: Returned to Co. from daily duty in R. 2 M. D. August 23rd 1864.

Free on or before April 19th 1861

* See enrollment on card from muster-in roll.

Book mark:

Washington

(858c) Copyist.

NARA 581

L | 3 | U.S.C.T.

George Lodine

Priv, Co. B, 3 Reg't U. S. Col'd Infantry.

Appears on

Company Muster Roll

for Sept & Oct, 1864.

Joined for duty and enrolled:

When June 30, 1863.*

Where Phila^d Pa *

Period 3 years.*

Present or absent Present

Stoppage, $ 100 for

Due Gov't $ 100 for

Remarks: Free on or before April 19th 1861 – Due soldier dif. pay ($6 per Mo.) from June 29th/63 to Apr. 30th/64

* See enrollment on card from muster-in roll.

Book mark:

WWaddington
(858c) Copyist.

L | 3 | U.S.C.T.

George Lodine

Priv., Co. B, 3 Reg't U. S. Col'd Infantry.

Appears on

Company Muster Roll

for Sept. Oct. Nov & Dec, 1864.

Joined for duty and enrolled:

When June 30, 186 3.*

Where Philad Pa *

Period 3 years.*

Present or absent Present

Stoppage, $ 100 for

Due Gov't $ 100 for

Remarks: Free on or before April 19th 1861. Stop for 1 Canteen 1/2 $ Sent. Due Soldier dif pay $6 per mo from June 29th 1863. to Apr. 30th 1864

* ☞ See enrollment on card from muster-in roll.

Book mark:

Washington

(858c) Copyist.

NARA 583

L | 3 | U.S.C.T.

George Lodine

Priv, Co. B, 3 Reg't U. S. Col'd Infantry.

Appears on

Company Muster Roll

for from Aug 31/64 to Feb 28, 1865.

Joined for duty and enrolled:

When June 30, 1863.*

Where Phila^d Pa *

Period 3 years.*

Present or absent Present

Stoppage, $ 100 for

Due Gov't $ 100 for

Remarks: Free on or before April 19th 1861. Stop for 1 Canteen 1/2 S Tent. Due Soldier dif $6 per mo from Enrolment to Apr 30th 1864

* See enrollment on card from muster-in roll.

Book mark:

Washington
Copyist.

(358c)

NARA 584

L | 3 | U.S.C.T.

George Lodine

Priv, Co. B, 3 Reg't U. S. Col'd Infantry.

Appears on

Company Muster Roll

for Mch & Apl, 1865

Joined for duty and enrolled:

When June 30, 1863*

Where Phila, Pa *

Period 3 years.*

Present or absent Present

Stoppage, $ 100 for 1 canteen 1/2 S. Tent

Due Gov't, $ 100 for

Remarks: Free on or before Apl 19/61. Due soldier dif. pay $6 per mo. from enrollment to Apl 30, 1864.

* See enrollment on card from muster-in roll.

Book mark:

W. M. Jackson
Copyist.

(358c)

L | 3 | U.S.C.T.

George Rodine,

Pvt, Co. B, 3 Reg't U. S. Col'd Infantry.

Appears on

Company Muster Roll

for May & June, 186 5.

Joined for duty and enrolled:

When June 30, 186 3*

Where Phila. Pa.,*

Period 3 years.*

Present or absent Present.

Stoppage, $ 100 for 1 canteen, 1/2 Shirt.

Due Gov't $ 100 for

Remarks: Due soldier dif. pay $6 per mo. from enrollment to Apl 30. 1864. Free on or before Apl 19. 61

NEXT ROLL ON FILE MUSTER OUT.

* See enrollment on card from muster-in roll.

Book mark:

Calloway

(358c) Copyist.

L | 3 | U.S.C.T.

George Lodine

Pvt., Co. B, 3 Reg't U. S. Col'd Infantry.

Appears on **Co. Muster-out Roll,** dated Jacksonville, Fla, Oct. 31, 1865.

Muster-out to date Oct. 31, 1865.

Last paid to June 30, 1865.

Clothing account:

Last settled....., 186 ; drawn since $.....100

Due soldier $.....100; due U. S. $ 16 75/100

Am't for cloth'g in kind or money adv'd $.....100

Due U. S. for arms, equipments, &c., $ 6 00/100

Bounty paid $.....100; due $ 100 100

Remarks: Enrolled as Corpl. Reduced to ranks July 29, '63.

Book mark: 439026

J. M. McJackson
Captain

(361)

NARA 567

741

Loudon, Caesar

Co. 2, 3 U.S. Col'd Inf.

Private Private

CARD NUMBERS.

1	6251423	26	
2	6262321	27	
3	6262396	28	
4	6262470	29	
5	6262539	30	
6	6262615	31	
7	6262698	32	
8	6262780	33	
9	6262870	34	
10	6262956	35	
11	9061470	36	
12		37	
13		38	
14		39	
15		40	
16		41	
17		42	
18		43	
19		44	
20		45	
21		46	
22		47	
23		48	
24		49	
25		50	

Book Mark:

See also

L. | 3 | U.S.C.T.

Caesar London

....., Co. V, 3 Reg't U. S. Col'd Inf.

Appears on

Company Descriptive Book

of the organization named above.

DESCRIPTION.

Age 20 years; height 5 feet 8 inches.

Complexion Black

Eyes Black; hair Black

Where born Port Crane Florida

Occupation Laborer

ENLISTMENT.

When Mch. 10th/1864, ~~186~~ .

Where Jacksonville Fla.

By whom Capt. Smith; term 3 y'rs.

Remarks:

Daggett

(383g) Copyist.

L. | 3 | U.S.C.T.

Caesar London

Appears with rank of Private on

Muster and Descriptive Roll of a Detachment of U. S. Vols. forwarded

for the 3 Reg't U. S. Col'd Infantry. Roll dated Jacksonville Florida, Mar. 29, 1864.

Where born Fort Crane Florida

Age 20 y'rs; occupation Laborer

When enlisted Mch. 10, 1864.

Where enlisted Jacksonville Fla.

For what period enlisted 3 years.

Eyes Black; hair Black

Complexion Black; height 5 ft. 8 in.

When mustered in Mch. 29, 1864.

Where mustered in Jacksonville Fla.

Bounty paid $10 $\frac{}{100}$; due $ $\frac{}{100}$

Where credited

Company to which assigned "I"

Remarks:

Book mark:

Gaggett

(339) Copyist.

3 | U.S.C.T.

Cesar London

Pvt., Co. I, 3 Reg't U. S. Col'd Infantry.

Appears on

Company Muster Roll

for May & April, 1864.

Present or absent Present

Stoppage, $ 100 for

Due Gov't, $ 100 for

Remarks:

Book mark:

(858) Copyist

NARA 591

L | 3 | U.S.C.T.

Casar London

Pvt., Co. I, 3 Reg't U. S. Col'd Infantry.

Appears on

Company Muster Roll

for May & June, 1864.

Present or absent Present

Stoppage, $ 100 for

Due Gov't, $ 100 for

Remarks:

Book mark:

J. Moore
Copyist

(358)

L | 3 | U.S.C.T.

Lewis Landon

R, Co. I, 3 Reg't U. S. Col'd Infantry.

Appears on

Company Muster Roll

for July & Aug, 186 4.

Present or absent Present

Stoppage, $ 100 for

Due Gov't, $ 100 for

Remarks:

Book mark:

D J Moore

(358) Copyist

G | 3 | U.S.C.T.

Caesar London

Pvt., Co. I, 3 Reg't U. S. Col'd Infantry.

Appears on

Company Muster Roll

for Sept & Oct, 1864.

Present or absent Present

Stoppage, $ 100 for

Due Gov't, $ 100 for

Remarks:

Book mark:

(256) Copyist

NARA 594

S | 3 | U.S.C.T.

Caesar London

Pvt., Co. I, 3 Reg't U. S. Col'd Infantry.

Appears on

Company Muster Roll

for Nov. & Dec., 1864.

Present or absent Present

Stoppage, $ .... 100 for

Due Gov't, $ .... 100 for

Remarks:

Book mark:

J. Moore

(358) Copyist

G | 3 | U.S.C.T.

Caesar London

Pvt., Co. I, 3 Reg't U. S. Col'd Infantry.

Appears on

Company Muster Roll

for Jany & Feby, 1865.

Present or absent Present

Stoppage, $ 100 for

Due Gov't, $ 100 for

Remarks:

Book mark:

(358) Copyist

L. | 3 | U.S.C.T.

Caesar London

Pvt., Co. I, 3 Reg't U. S. Col'd Infantry.

Appears on

Company Muster Roll

for Mar. & Apr., 1865.

Present or absent Present.

Stoppage, $ 100 for

Due Gov't, $ 100 for

Remarks:

Book mark:

A. G. White

(858) Copyist

L. | 3 | U.S.C.T.

Caesar London

Pvt., Co. I, 3 Reg't U. S. Col'd Infantry.

Appears on

Company Muster Roll

for May & June, 1865.

Present or absent Present.

Stoppage, $ 100 for

Due Gov't, $ 100 for

Remarks:

NEXT ROLL ON FILE MUSTER OUT.

Book mark:

J. F. White.

(858) Copyist

NARA 598

L.	3	U.S.C.T.

Caesar London

Pvt., Co. I, 3 Reg't U. S. Col'd Infantry.

Appears on **Co. Muster-out Roll**, dated

Jacksonville, Fla, Oct. 31, 1865.

Muster-out to date Oct. 31, 1865.

Last paid to June 30, 1865.

Clothing account:

Last settled ...., 186 ; drawn since $...... 100

Due soldier $ 21 62/100; due U. S. $...... 100

Am't for cloth'g in kind or money adv'd $...... 100

Due U. S. for arms, equipments, &c., $...... 100

Bounty paid $...... 100; due $ 100 100

Remarks: Joined as Private

Book mark: V. 225. P. 14676

N. F. White

(861) *Copyist.*

Seasar Loudon

, Co. I, 3 Reg't U.S.C.T.

Enclosures.

Bed Cards	Final Statements
Burial Records	Furloughs or L. of A
Certs. of Dis. for Discharge	Med. Certificates
C. M. Charges	Med. Des. Lists
Descriptive Lists	Orders
Discharge Certificates	Pris. of War Record
Enlistment Papers	Resignations

Other papers relating to—

Admission to Hosp'l	Furlough or L. of A
Casualty Sheet	Med. Examination
Confinement	Misc. Information
Contracts	Pay or Clothing
Death or Effects	Personal Reports
Desertion	Rank
Discharge from Hosp'l	Transfer to Hosp'l
Discharge from Service	Transfer to V. R. C.
Duty	Transportation

NARA 688

MICROFILM PUBLICATION M 1845

COMPILED MILITARY SERVICE RECORDS
OF VOLUNTEER UNION SOLDIERS WHO SERVED WITH
THE UNITED STATES COLORED TROOPS (USCT)
THIRD INFANTRY

PERSONAL PAPERS' TARGET SHEET

PLEASE NOTE THE CHECKED INFORMATION ABOUT THE PERSONAL PAPERS IN THIS FILE:

☐ NO PERSONAL PAPERS WERE FOUND IN THIS FILE WHEN THE RECORDS WERE ARRANGED FOR MICROFILMING.

☒ 1 PERSONAL PAPER(S) FOUND IN THIS FILE WHEN THE RECORDS WERE ARRANGED FOR MICROFILMING.

NARA 601

DECLARATION OF RECRUIT.

I, Ceasar London desiring to VOLUNTEER as a Soldier in the Army of the United States, for the term of THREE YEARS, Do Declare, That I am Twenty years and .... months of age; that I have never been discharged from the United States service on account of disability or by sentence of a court martial, or by order before the expiration of a term of enlistment; and I know of no impediment to my serving honestly and faithfully as a soldier for three years.

GIVEN at Jacksonville Fla
the tenth day of March 1864

Witness:
Chas F Smith
Capt 3d U.S.C.T.

Ceasar his X mark London

No. 3

Caesar London
Volunteered at Jacksonville Fla.
10th day of March 1864,
By Capt Chas F Smith
3 rd Regiment of U.S.C.T.

1st enlistment; ~~last served in Company~~ (—)
.... Reg't of ....
Discharged .... 18 .

CONSENT IN CASE OF MINOR.

I, ... Do CERTIFY, That I am the .... of ....; that the said .... is .... years of age; and I do hereby freely give my CONSENT to his volunteering as a SOLDIER in the ARMY OF THE UNITED STATES for the period of THREE YEARS.

GIVEN at ....
the .... day of ....

Witness:

(A. G. O. No. 74 & 76.)

NOTE 1.—This blank will be used for both enlistments and re-enlistments—enlistment of veterans, &c., &c., in the volunteer service. They will be made out in duplicate in all cases—one to accompany the recruiting return of the superintendent (not the recruiting officer) to the Adjutant General, and one to accompany the accounts of the officer who pays bounty, &c. The Regiment and Company in which the soldier last served should be given on the back.

NOTE 2.—An enlistment holds to service. A muster-in must, in all cases, precede payment of pay, bounty, pension, &c. A muster-in roll must, in all cases, be filed in the Adjutant General's Office as evidence of muster-in. The mustering officer, commissary or assistant commissary of musters, as the case may be, will countersign both enlistments as having mustered the soldier into the service of the United States before either of them is given to the disbursing officer.

Received From Second Auditor Sep, 1st. 1892.

NARA 602

VOLUNTEER ENLISTMENT.

STATE OF Florida

TOWN OF Jacksonville

I, Ceasar London born in Port Crane in the State of Florida aged Twenty years, and by occupation a Labour Do HEREBY ACKNOWLEDGE to have volunteered this Tenth day of ~~Feb~~ March 1864, to serve as a **Soldier** in the **Army of the United States of America**, for the period of THREE YEARS, unless sooner discharged by proper authority: Do also agree to accept such bounty, pay, rations, and clothing, as are, or may be, established by law for volunteers. And I, Ceasar London do solemnly swear, that I will bear true faith and allegiance to the ***United States of America***, and that I will serve them honestly and faithfully against all their enemies or opposers whomsoever; and that I will observe and obey the orders of the President of the United States, and the orders of the officers appointed over me, according to the Rules and Articles of War.

Sworn and subscribed to, at Jacksonville
this tenth day of March 1864,
BEFORE Chas F Smith
Capt 3d U S C T

Ceasar his x mark London

I CERTIFY, ON HONOR, That I have carefully examined the above-named Volunteer, agreeably to the General Regulations of the Army, and that, in my opinion, he is free from all bodily defects and mental infirmity, which would in any way disqualify him from performing the duties of a soldier.

C G Polk
Ass Surg. 3 U S C T
EXAMINING SURGEON.

I CERTIFY, ON HONOR, That I have minutely inspected the Volunteer, Ceasar London previously to his enlistment, and that he was entirely sober when enlisted; that, to the best of my judgment and belief, he is of lawful age; and that, in accepting him as duly qualified to perform the duties of an able-bodied soldier, I have strictly observed the Regulations which govern the recruiting service. This soldier has Black eyes, Black hair, Black complexion, is Five feet Eight inches high.

Chas F Smith Capt
Third Regiment of U S C T ~~Volunteers,~~
RECRUITING OFFICER.

(A. G. O. No. 74 & 76.)

Mustered into the service of the United States, for three years or during the war, from date of enlistment, in Company I 3d Regiment of U S C T ~~Volunteers~~, on the 29 day of March, 1864, at Jacksonville Fla.

[illegible]
Capt [illegible]
Mustering Officer

74L

Loudon, John

Co B, 3 U.S. Col'd Inf.

Private Private

CARD NUMBERS.

1	6253600	26
2	6254576	27
3	6254481	28
4	6254395	29
5	6254316	30
6	6254237	31
7	6254159	32
8	6254081	33
9	6254095	34
10	6253926	35
11	6253847	36
12	6253764	37
13	6253683	38
14	6254663	39
15	9060682	40
16		41
17		42
18		43
19		44
20		45
21		46
22		47
23		48
24		49
25		50

Book Mark:

See also

NARA 604

S. 2076934 Pomon

L | 3 | U.S.C.T.

John London

, Co. B, 3 Reg't U. S. Col'd Inf.

Appears on

Company Descriptive Book

of the organization named above.

DESCRIPTION.

Age 17 years; height 5 feet 5 inches.

Complexion Yellow

Eyes Brown; hair Brown

Where born Lancaster Co Penn

Occupation Laborer

ENLISTMENT.

When June 30, 1863

Where Philadelphia

By whom Lt Col Wagner, term 3 y'rs.

Remarks:

H Everson

(383y) Copyist.

L. | 3 | U.S.C.T.

John Loudon

Pvt, Co. B, 3 Reg't U. S. Col'd Infantry.

Age 18 years.

Appears on

Company Muster-in Roll

of the organization named above. Roll dated Phil. Pa., Aug 7, 1863.

Muster-in to date June 30, 1863.

Joined for duty and enrolled:

When June 30, 1863.*

Where Phil. Pa.

Period 3 years.*

Remarks:

*☞ Muster-in roll shows enrollment of all men of this company as of same date and place. See enrollment on subsequent card or cards.

Book mark:

Martin

(356c)

Copyist.

L | 3 | U.S.C.T.

John Loudon

Pvt, Co. B, 3 Reg't U. S. Col'd Infantry.

Appears on

Company Muster Roll

for July & Aug., 1863.

Joined for duty and enrolled:

When June 30, 1863.*

Where Phil. Pa.*

Period 3 years.*

Present or absent Present.

Stoppage, $ 100 for

Due Gov't $ 100 for

Remarks:

* See enrollment on card from muster-in roll.

Book mark:

(858c) J. Martin

Copyist.

NARA 688

G. | 3 | U.S.C.T.

John Loudon

Priv, Co. B, 3 Reg't U. S. Col'd Infantry.

Appears on

Company Muster Roll

for Sept. Oct., 1863.

Joined for duty and enrolled:

When June 30, 1863.*

Where Phil. Pa.*

Period 3 years.*

Present or absent Present.

Stoppage, $ 100 for

Due Gov't $ 100 for

Remarks: Pay due from date of original muster.

* ☞ See enrollment on card from muster-in roll.

Book mark:

Martin

(858c) Copyist.

L. | 3 | U.S.C.T.

John Loudon

Priv., Co. B, 3 Reg't U. S. Col'd Infantry.

Appears on

Company Muster Roll

for Nov & Dec, 1863.

Joined for duty and enrolled:

When June 30, 1863.*

Where Phil. Pa.*

Period 3 years.*

Present or absent. Present.

Stoppage, $ 100 for

Due Gov't $ 100 for

Remarks: Pay due from date of original muster.

* See enrollment on card from muster-in roll.

Book mark:

Martin

(858c) Copyist.

L. | 3 | U.S.C.T.

John Loudon

Priv, Co. B, 3 Reg't U. S. Col'd Infantry.

Appears on

Company Muster Roll

for Jan & Feb, 1863

Joined for duty and enrolled:

When June 30, 1863.*

Where Phil Pa *

Period 3 years.*

Present or absent Present

Stoppage, $ 100 for

Due Gov't $ 100 for

Remarks:

* ☞ See enrollment on card from muster-in roll.

Book mark:

Martin

(858c) *Copyist.*

NARA 611

L | 3 | U.S.C.T.

John London

Priv, Co. B, 3 Reg't U. S. Col'd Infantry.

Appears on

Company Muster Roll

for Mar & Apr, 1864.

Joined for duty and enrolled:

When June 30, 1863*

Where Philadelphia Pa*

Period 3 years.*

Present or absent Present

Stoppage, $ 100 for

Due Gov't, $ 100 for

Remarks: Stop for 1 wiper 1 cone wrench 1 cart box plate, 1 knapsack

* See enrollment on card from muster-in roll.

Book mark:

J. McFarily
Copyist.

(358c)

L | 3 | U.S.C.T.

John London

Priv., Co. B, 3 Reg't U. S. Col'd Infantry.

Appears on

Company Muster Roll

for May & June, 1864.

Joined for duty and enrolled:

When June 30, 1863.*

Where Philad. Pa *

Period 3 years.*

Present or absent Absent

Stoppage, $ 100 for

Due Gov't, $ 100 for

Remarks: On detached service in Forage Gard near Jacksonville Fla since June 17th 1864 by S.O. No. 126 dated Hd. 2nd Dist. of Fla. Jacksonville Fla. June 17th 1864.

* See enrollment on card from muster-in roll.

Book mark:

Washington

(358c) Copyist.

L | 3 | U.S.C.T.

John London

Pvt., Co. B, 3 Reg't U. S. Col'd Infantry.

Appears on

Company Muster Roll

for May June July & Aug, 1864.

Joined for duty and enrolled:

When June 30, 1863.*

Where Philadelphia Pa *

Period 3 years.*

Present or absent Absent

Stoppage, $ 100 for

Due Gov't $ 100 for

Remarks: Relieved of detach'd service & waiting transportation from Jacksonville to this Post

* ☞ See enrollment on card from muster-in roll.

Book mark:

Washington

(858c) Copyist.

NARA 614

L | 3 | U.S.C.T.

John London

Priv, Co. B, 3 Reg't U. S. Col'd Infantry.

Appears on

Company Muster Roll

for Sept & Oct, 1864.

Joined for duty and enrolled:

When June 30", 1863.*

Where Phila^d Pa *

Period 3 years.*

Present or absent Present

Stoppage, $ 100 for

Due Gov't $ 100 for

Remarks: Free on or before April 19" 1861 - Due soldier dif. pay ($6. per mo.) from June 29"/63 to Feb 29"/64

* See enrollment on card from muster-in roll.

Book mark:

(358c) Wanning ton Copyist.

NARA 615

L | 3 | U.S.C.T.

John Loudon

Priv, Co. B, 3 Reg't U. S. Col'd Infantry.

Appears on

Company Muster Roll

for Sept Oct Nov & Dec, 1864.

Joined for duty and enrolled:

When June 30, 1863.*

Where Phila^d Pa *

Period 3 years.*

Present or absent Present

Stoppage, $ 100 for

Due Gov't $ 100 for

Remarks: Free on or before April 19" 1861. Stop for 1 Haversack. Due Soldier dif pay *6 per mo. from June 29" 1863. to Apr. 30" 1864

* See enrollment on card from muster-in roll.

Book mark:

(858c) Washington Copyist.

L | 3 | U.S.C.T.

John London

Priv., Co. B, 3 Reg't U. S. Col'd Infantry.

Appears on

Company Muster Roll

for Jany Aug 31/64 to Feb 28, 1865.

Joined for duty and enrolled:

When June 30, 1863.*

Where Phila Pa *

Period 3 years.*

Present or absent Present

Stoppage, $ 100 for

Due Gov't $ 100 for

Remarks: Free on or before April 19th 1861. Slip for 1 Hanover Due Soldier diff pay $6 per mo from Enrolment to Apr 30 1864

* See enrollment on card from muster-in roll.

Book mark:

Waddington

(358c) Copyist.

L 3 U.S.C.T.

John London

Pvt., Co. B, 3 Reg't U. S. Col'd Infantry.

Appears on

Company Muster Roll

for Mch & Apl, 1865.

Joined ~~for duty~~ and enrolled:

When June 30, 1863*

Where Phila, Pa. *

Period 3 years.*

Present or absent Present

Stoppage, $ 100 for 1 Haversack

Due Gov't, $ 100 for

Remarks: Free on or before Apl 19/61. Due Soldier dif pay $6 per mo. from enrollment to Apl. 30/64

* See enrollment on card from muster-in roll.

Book mark:

M. M. Jackson

(358c) Copyist.

L | 3 | U.S.C.T.

Pvt John London,

, Co. B, 3 Reg't U. S. Col'd Infantry.

Appears on

Company Muster Roll

for May & June, 1865.

Joined for duty and enrolled:

When June 30, 1863.*

Where Phila. Pa. *

Period 3 years.*

Present or absent Present.

Stoppage, $ 100 for 1 Haversack.

Due Gov't $ 100 for

Remarks: One soldier dif. pay $6 per mo. from enrollment to Apl 30. 64. Free on or before Apl. 19, 61

NEXT ROLL ON FILE MUSTER OUT.

* ☞ See enrollment on card from muster-in roll.

Book mark:

Calloway.

(358c) Copyist.

L 3 U.S.C.T.

John London

Pvt., Co. B, 3 Reg't U. S. Col'd Infantry.

Appears on **Co. Muster-out Roll,** dated Jacksonville, Fla., Oct. 31, 1865.

Muster-out to date Oct. 31, 1865.

Last paid to June 30, 1865.

Clothing account:

Last settled....., 186 ; drawn since $.....100

Due soldier $.....100; due U. S. $ 43 21/100

Am't for cloth'g in kind or money adv'd $.....100

Due U. S. for arms, equipments, &c., $ 6 00/100

Bounty paid $.....100; due $ 100 100

Remarks: Private from enrollment.

Book mark:

W. M. Dickson

(361) Copyist

743

Loughman, William Jr.

Co G, 3 U.S. Col'd Inf.

Private | Private

CARD NUMBERS.

1	625960 2	26	
2	625967 8	27	
3	625976 1	28	
4	625983 9	29	
5	625991 6	30	
6	625999 9	31	
7	626067 8	32	
8	626015 8	33	
9	626023 4	34	
10	626031 3	35	
11	626039 0	36	
12	626047 7	37	
13	626056 9	38	
14	625197 1	39	
15	626067 6	40	
16	90612285	41	
17		42	
18		43	
19		44	
20		45	
21		46	
22		47	
23		48	
24		49	
25		50	

Book Mark:

See also

NARA 621

S863779 - Pogartl
O962087 Poof
O962088 Pollutin
Rep383897 -
5993277 - 2 and
Rep401149 -

L. | 3 | U.S.C.T.

William H. Loughman

, Co. G., 3 Reg't U. S. Col'd Inf.

Appears on

Company Descriptive Book

of the organization named above.

DESCRIPTION.

Age 17 years; height 5 feet 5½ inches.

Complexion D. Brown

Eyes Brown; hair Black

Where born Milford Delaware

Occupation Sailor

ENLISTMENT.

When July 16, 186 .

Where Philada Pa.

By whom Lt Col Magee, term 3 y'rs.

Remarks:

Daggett

(383g) Copyist.

L | 3 | U.S.C.T.

William H. Loughman

Pvt G, Co....., 3 Reg't U. S. Col'd Infantry.

Age 21 years.

Appears on

Company Muster-in Roll

of the organization named above. Roll dated Philad.a, Pa July 20, 1863.

Muster-in to date July 16, 1863

Joined for duty and enrolled:

When July 16, 1863.

Where Philadelphia, Pa

Period 3 years.

Remarks:

Book mark:

(856) Copyist.

L | 3 | U.S.C.T.

William H. Loughman

Pvt, Co. G, 3 Reg't U. S. Col'd Infantry.

Appears on

Company Muster Roll

for July 13/63 to Aug 31, 1863.

Present or absent Present

Stoppage, $ 100 for

Due Gov't, $ 100 for

Remarks:

Book mark:

Wolloz

(858) Copyist

L | 3 | U.S.C.T.

William H. Loughman
Pvt, Co. G, 3 Reg't U. S. Col'd Infantry.

Appears on

Company Muster Roll

for Sept & Oct, 186 3

Present or absent Present

Stoppage, $ 100 for

Due Gov't, $ 100 for

Remarks:

Book mark:

(868) Copyist

Lt 3 U.S.C.T.

William H. Loughman

Pvt, Co. G, 3 Reg't U. S. Col'd Infantry.

Appears on

Company Muster Roll

for Nov & Dec, 1863.

Present or absent Present

Stoppage, $ 100 for

Due Gov't, $ 100 for

Remarks:

Book mark:

Walker

(858)

Copyist

L | 3 | U.S.C.T.

William H. Loughman

Pvt, Co. G, 3 Reg't U. S. Col'd Infantry.

Appears on

Company Muster Roll

for Jan & Feb, 1864.

Present or absent Present

Stoppage, $ 100 for

Due Gov't, $ 100 for

Remarks:

Book mark:

W J Bloz

(858) Copyist

L | 3 | U.S.C.T.

William H. Loughman

Pvt., Co. G, 3 Reg't U. S. Col'd Infantry.

Appears on

Company Muster Roll

for Mch. & Apl., 1864.

Present or absent Present

Stoppage, $ 100 for

Due Gov't, $ 100 for

Remarks:

Book mark:

Randall

(858) Copyist

L | 3 | U.S.C.T.

William H. Laughman

Pvt., Co. G, 3 Reg't U. S. Col'd Infantry.

Appears on

Company Muster Roll

for May & June, 1864

Present or absent Present

Stoppage, $ 100 for

Due Gov't, $ 100 for

Remarks:

Book mark:

Randall

(858) Copyist

L | 3 | U.S.C.T.

William R. Loughman

~~Private~~, Co. G, 3 Reg't U. S. Col'd Infantry.

Appears on

Company Muster Roll

for July and August, 1864.

Present or absent Present.

Stoppage, $ 100 for

Due Gov't, $ 100 for

Remarks: Free on or before ~~Feby~~ Apr. 19, 1861.

* As it appears on Roll.

Book mark:

Keefer.

(858) Copyist

L | 3 | U.S.C.T.

William H. Loughman

Pvt, Co. G, 3 Reg't U. S. Col'd Infantry.

Appears on

Company Muster Roll

for Sept & Oct, 1864.

Present or absent Present

Stoppage, $ 100 for

Due Gov't, $ 100 for

Remarks: Free on or before Apr 19-1861 Paid but $7. per month from date of enlistment to Feb 28-1864 Back pay due

Book mark:

C C Parker

(858) Copyist

L | 3 | U.S.C.T.

William H. Loughman

Pvt., Co. G, 3 Reg't U. S. Col'd Infantry.

Appears on

Company Muster Roll

for Nov. & Dec., 1864

Present or absent Present

Stoppage, $ 100 for

Due Gov't, $ 100 for

Remarks: Free, on or before April 19th 1861. Paid but $7. per Mo. from date of Enlistment to Feb. 29th 1864. Back pay due.

Book mark:

Randall

(858) Copyist

L | 3 | U.S.C.T.

William H. Loughman

Pvt., Co. G, 3 Reg't U. S. Col'd Infantry.

Appears on

Company Muster Roll

for Jan. & Feb., 1865.

Present or absent Present

Stoppage, $ 100 for

Due Gov't, $ 100 for

Remarks: Free, on or before April 19th 1861. Paid but $7. per Mo. from date of Enlistment to Feb. 29th 1864. Back pay due.

Book mark:

Randall

Copyist

(858)

NARA 634

L	3	U.S.C.T.

William H. Loughman.

Priv., Co. G, 3 Reg't U. S. Col'd Infantry.

Appears on

Company Muster Roll

for Mch & Apr., 1865.

Present or absent Present

Stoppage, $ 100 for

Due Gov't, $ 100 for

Remarks: Paid but $7 per month from date of enlistment to Feb. 29, 1864. Back pay due.
Free April 19, 1861.

Book mark:

(858)

Sandz
Copyist

L | 3 | U.S.C.T.

William H. Loughman

Pvt., Co. G, 3 Reg't U. S. Col'd Infantry.

Appears on

Company Muster Roll

for May and June, 1865.

Present or absent Present

Stoppage, $ 100 for

Due Gov't, $ 100 for

Remarks: Pres. Paid but $7. per mo. from date of enlistment to Feb. 29, 1864. Back pay due.

NEXT ROLL ON FILE MUSTER OUT.

Book mark:

Lary

Copyist

(858)

L | 3 | U.S.C.T.

William H. Loughman

Private, Co. G, 3 Reg't U. S. Col'd Infantry.

Appears on a

Detachment Muster-out Roll

of the organization named above. Roll dated Jacksonville, Fla., Oct. 31, 1865.

Muster-out to date Oct. 31, 1865.

Last paid to June 30, 1865

Clothing account:

Last settled ....., 186 ; drawn since $..... 100

Due soldier $ 6 78/100 ; due U. S. $..... 100

Am't for cloth'g in kind or money adv'd $..... 100

Due U. S. for arms, equipments, &c., $..... 20/100

Bounty paid $..... 100 due $ 100 100

Remarks: Private from enlistment. Mustered out in obedience to Circ. No. 44 War Dept. A. G. O. 1865 & G. O. No. 10 Mil. Div. Gulf 1865 — his services being no longer required.

Book mark:

O. J. Markle,

(349) Copyist.

G. | 3 | U.S.C.T.

William H. Loughman

Pri., Co. G, 3 Reg't U. S. Col'd Infantry.

Appears on **Co. Muster-out Roll,** dated Jacksonville Fla., Oct. 31, 1865.

Muster-out to date ....., 186 .

Last paid to June 30, 1865.

Clothing account:

Last settled....., 186 ; drawn since $.....100

Due soldier $.....6 78/100; due U. S. $.....100

Am't for cloth'g in kind or money adv'd $.....100

Due U. S. for arms, equipments, &c., $.....100

Bounty paid $.....100; due $ 100 100

Remarks: Stop for Ordnance 20¢. Absent from enlistment. Discharge given - will not be paid on this Roll. Discharged to remain in the State by G. O. No. 10. Mil. Div. Gulf. 1865.

Book mark:

J. J. Steatns

(361) Copyist.

Coveridge, Romulus C.

Co. H, 3 U.S. Col'd Inf.

1 Lieutenant | Captain

CARD NUMBERS.

1	6253545	26	
2	6253629	27	
3	6253713	28	
4	6253795	29	
5	6253874	30	
6	6253954	31	
7	6254032	32	
8	6254110	33	
9	6254188	34	
10	6254265	35	
11	6254344	36	
12	6254422	37	
13	6254516	38	
14	6251925	39	
15	6251391	40	
16	6254705	41	
17	6251956	42	
18	6261845	43	
19	9428466	44	
20	L. 21 - C.T. - 1863	45	
21	L. 21 C.T. 1863	46	
22		47	
23		48	
24		49	
25		50	

Book Mark: L. 21 - C.T. - 1863.

See also

RoP 412588
S. 1481495. R.O.M. M.
S-2788299 R.O. Retd
A4 1687113

NARA 640

L | 3 | U.S.C.T.

Romulus C. Loveridge

1st Lt, Co. ......, 3 Reg't U. S. Col'd Inf.

Appears on

Regimental Descriptive Book

(List of Commissioned Officers)

of the regiment named above.

Rank 1st Lieut.

Date of appointment July 10 1863.

Remarks:

Sabine
Copyist.

(384)

L. | 3 | U.S.C.T.

Romulus C. Loveridge

1st Lieut, Co B, 3 Reg't U. S. Col'd Infantry.

Age 24 years.

Appears on

Company Muster-in Roll

of the organization named above. Roll dated Phil. Pa., Aug 7, 1863.

Muster-in to date July 25, 1863.

Joined for duty and enrolled:

When July 25, 1863.*

Where Philadelphia Pa.

Period 3 years.*

Remarks:

*☞ Muster-in roll shows enrollment of all men of this company as of same date and place. See enrollment on subsequent card or cards.

Book mark: L 21 – C.T. – 1863.

D. Martin

(356c) Copyist.

L. | 3 | U.S.C.T.

Romulus C. Loveridge
1st Lieut, Co. B, 3 Reg't U. S. Col'd Infantry.

Appears on

Company Muster Roll

for Sept & Oct., 1863.

Joined for duty and enrolled:

When July 10, 1863.*

Where *

Period ..... years.*

Present or absent #

Stoppage, $ ..... 100 for .....

Due Gov't, $ ..... 100 for .....

Remarks: On Special duty as A. A. D. C. on the staff of the Genl. Commdg. Brig. Since Sep. 12, 1863.
#Name appears in column of names present (over)

* See enrollment on card from muster-in roll.

Book mark:

W. H. Martin

(858c) Copyist.

JAN.19 6253713 ☆1891☆

with line drawn
through it.

L. | 3 | U.S.C.T.

Romulus le Loveridge

1st Lieut, Co. B, 3 Reg't U. S. Col'd Infantry.

Appears on

Company Muster Roll

for Nov. & Dec, 1863.

Joined for duty and enrolled:

When July 10, 1863.*

Where *

Period 3 years.*

Present or absent Absent.

Stoppage, $ 100 for

Due Gov't $ 100 for

Remarks: On special duty as A. A. G. on the Staff of the Col. Commdg. Brigade since Sept. 12. 63.

* ☞ See enrollment on card from muster-in roll.

Book mark:

Martin

(358c) Copyist.

L. | 3 | U.S.C.T.

Romulus B. Loveridge

1st Lieut, Co. B, 3 Reg't U. S. Col'd Infantry.

Appears on

Company Muster Roll

for Jan. & Feb., 1864.

Joined for duty and enrolled:

When....., 186 .*

Where .....*

Period 3 years.*

Present or absent Present

Stoppage, $.....100 for.....

Due Gov't $.....100 for.....

Remarks: On Special duty as A. A. D. C. on the staff of the Col. Commd'g Brigade since Sep. 17. 63.

* ☞ See enrollment on card from muster-in roll.

Book mark:.....

Martin

(858c) Copyist.

L | 3 | U.S.C.T.

Romulus C Loveridge

1 Lieut, Co. B, 3 Reg't U. S. Col'd Infantry.

Appears on

Company Muster Roll

for Mch + Apr, 1864.

Joined for duty and enrolled:

When July 10, 1863.*

Where *.

Period 3 years.*

Present or absent Present

Stoppage, $ 100 for

Due Gov't $ 100 for

Remarks: Returned to Regt from Special duty as A.A.D.C. Mch 15 1864. In command of company since Mar 15/64

* See enrollment on card from muster-in roll.

Book mark:

J. M. Hardy
Copyist.

(358c)

L | 3 | U.S.C.T.

Romulus C. Lovridge

1st Lt., Co. B, 3 Reg't U. S. Col'd Infantry.

Appears on

Company Muster Roll

for May and June, 1864.

Joined for duty and enrolled:

When July 10th, 1863.*

Where *

Period 3 years.*

Present or absent Present

Stoppage, $ 100 for

Due Gov't, $ 100 for

Remarks: In command of Co. since March 15th 1864. Due $10 per month for responsibility of Arms & Accoutrements

* See enrollment on card from muster-in roll.

Book mark:

Washington

(358c) Copyright.

NARA 648

L | 3 | U.S.C.T.

Romulus C. Lowridge

1st Lt, Co. B, 3 Reg't U. S. Col'd Infantry.

Appears on

Company Muster Roll

for May June July & Aug., 1864.

Joined for duty and enrolled:

When July 10", 1863.*

Where *

Period 3 years.*

Present or absent Present

Stoppage, $ 100 for

Due Gov't, $ 100 for

Remarks: In command of Company since March 15" 1864 Due $10. per Month for responsibilities of arms & accoutrements

* See enrollment on card from muster-in roll.

Book mark:

W Washington
Copyist.

(358c)

NARA 649

L. | 3 | U.S.C.T.

Romulus C. Loveridge
1st Lieut, Co. B, 3 Reg't U. S. Col'd Infantry.

Appears on

Company Muster Roll

for July & Aug., 1864.

Joined for duty and enrolled:

When....., 186 .*

Where .....*

Period ..... years.*

Present or absent Present

Stoppage, $..... 100 for.....

Due Gov't $..... 100 for .....

Remarks: Apptd. 1st Lieut. in 3d Reg. U.S.C.T. July 10. 63. by President & U.S. reported for duty and assigned to Co. B. July 22. 1863.

* ☞ See enrollment on card from muster-in roll.

Book mark: .....

W N Martin

(858c) Copyist.

L | 3 | U.S.C.T.

Romulus C. Lowrey

1st Lt, Co. B, 3 Reg't U. S. Col'd Infantry.

Appears on

Company Muster Roll

for Sept & Oct, 1864.

Joined for duty and enrolled:

When July 10th, 1863.*

Where *

Period 3 years.*

Present or absent Present

Stoppage, $ 100 for

Due Gov't $ 100 for

Remarks: In Command of Company since March 15th 1864

* See enrollment on card from muster-in roll.

Book mark:

W Washington

(358c) Copyist.

Lt | 3 | U.S.C.T.

Romulus C. Lowndes

1st Lt., Co. B, 3 Reg't U. S. Col'd Infantry.

Appears on

Company Muster Roll

for Sept. Oct. Nov & Dec, 1864.

Joined for duty and enrolled:

When July 10th, 1863.*

Where *

Period 3 years.*

Present or absent Present

Stoppage, $ 100 for

Due Gov't $ 100 for

Remarks: In Command of Company since March 15th 1864.

* See enrollment on card from muster-in roll.

Book mark:

Waddington

(358c) Copyist.

NARA 652

L | 3 | U.S.C.T.

Romulus C. Lorridge

1st Lt., Co. B, 3 Reg't U. S. Col'd Infantry.

Appears on

Company Muster Roll

for from Aug 31"/64 to Feb 28, 1865.

Joined for duty and enrolled:

When July 10", 1863.*

Where *

Period 3 years.*

Present or absent Absent

Stoppage, $ 100 for

Due Gov't $ 100 for

Remarks: Relieved of Command of Co. & detached as Pro. Marshal Fernandina Fla. Jan. 14" 1865. per S.O. No 3 Par IIII dated Hd Qrs. D.F. Jan. 3rd 1865

* See enrollment on card from muster-in roll.

Book mark:

(858c) Wauntington Copyist.

L | 3 | U.S.C.T.

Romulus C. Loveridge
1 Lt., Co. B, 3 Reg't U. S. Col'd Infantry.

Appears on

Company Muster Roll

for Mch & Apl, 1865.

Joined for duty and enrolled:

When July 10, 1863.*

Where *

Period 3 years.*

Present or absent Absent

Stoppage, $ 100 for

Due Gov't, $ 100 for

Remarks: Detached as Pro Marshal per S.O. No. 3 D.F. Jany 3/65

* See enrollment on card from muster-in roll.

Book mark:

W. M. Jackson
Capt.

(358c)

L | 3 | U.S.C.T.

Romulus Loveridge,

1st Lt., Co. B, 3 Reg't U. S. Col'd Infantry.

Appears on

Company Muster Roll

for May and June, 1865.

Joined for duty and enrolled:

When July 10, 1863*

Where *

Period 3 years.*

Present or absent Absent.

Stoppage, $ 100 for

Due Gov't $ 100 for

Remarks: Detached as Pro. Marshall per S. O. No. 3 Hd. Qrs. 2nd Dist. Fla. Jany 3d 1865.

NEXT ROLL ON FILE MUSTER OUT.

* See enrollment on card from muster-in roll.

Book mark:

Calloway

(858c) Copyist.

L | 3 | U.S.C.T.

Romulus C. Lovridge

Capt., Co. H, 3 Reg't U. S. Col'd Infantry.

Age 24 years.

Appears on an

Individual Muster-in Roll

of the organization named above. Roll dated Jacksonville, Fla, Oct 28, 1865.

Muster-in to date Sept 26, 1865.

Joined for duty and enrolled:

When Sept 26, 1865.

Where Jacksonville, Fla.

Period 3 years.

Remarks: Promoted from 1st Lt. Co. "B" same Regt. vice Sherman Omant promoted

Book mark:

(336) Leary
Copyist.

NARA 656

L | 3rd | **U.S.C.T.**

Romulus C. Loveridge

1st Lt., Co. B, 3 Reg't U. S. Col'd Infantry.

Appears on an

Individual Muster-out Roll

of the organization named above. Roll dated

Jacksonville Fla. Oct. 28, 1865.

Muster-out to date Sept. 25, 1865.

Last paid to Aug. 31, 1865.

Clothing account:

Last settled ...., 186 ; drawn since $......100

Due soldier $.........100; due U. S. $.........100

Am't for cloth'g in kind or money adv'd $......100

Due U. S. for arms, equipments, &c., $.........100

Bounty paid $.........100; due $.........100

Remarks: Mustered out to accept appointment of Capt. Co. H. same Regt. Vice Capt. S. Conant promoted.

Book mark: ....

(848) Paull

Copyist.

L. | 3 | U.S.C.T.

Romulus C. Lovewidge

Capt., Co. H, 3 Reg't U. S. Col'd Infantry.

Appears on **Co. Muster-out Roll,** dated Jacksonville Fla Oct. 31, 1865.

Muster-out to date ....., 186 .

Last paid to Aug. 31, 1865.

Clothing account:

Last settled....., 186 ; drawn since $.....100

Due soldier $.....100; due U. S. $.....100

Am't for cloth'g in kind or money adv'd $.....100

Due U. S. for arms, equipments, &c., $.....100

Bounty paid $.....100; due $.....100

Remarks: Joined as 1st Lt. Co. B. Promoted to Capt. Co. H. date of apptmt Sept 1/65. Mustered as Capt. Oct. 28/65 to date Sept. 26/65 Due $40 for Co. responsibility for command of Co. B. 3rd U. S. C. T. during Sept. Oct. Nov. & Dec. 1864. Discharge given will not (over)

Book mark: .....

Pol

(361) Copyist.

JAN. 19 6261845 ☆1891☆

be paid on this roll.
Discharged to remain
in the State under
G.O. No. 10. Mil. Div.
of the Gulf.

L | 3 | U.S.C.T.

Romulus C. Lovridge

Capt., Co. H, 3 Reg't U. S. Col'd Infantry.

Appears on a

Detachment Muster-out Roll

of the organization named above. Roll dated Jacksonville, Fla., Oct. 31, 1865.

Muster-out to date Oct. 31, 1865.

Last paid to Aug. 31, 1865

Clothing account:

Last settled ....., 186 ; drawn since $.....100

Due soldier $.....100; due U. S. $.....100

Am't for cloth'g in kind or money adv'd $.....100

Due U. S. for arms, equipments, &c., $.....100

Bounty paid $.....100 due $.....100

Remarks: Due $40 for Company responsibility for Command of Co. B. 3d U. S. C. T. during Sept. Oct. Nov. & Dec. 1864. Joined as 1st Lt. Co. "B" promoted to Capt. Co. H. date of appointment Sept. 1, 1865 - mustered Oct. 28, 1865.

Book mark:

[Over]

C. J. Markle,

(349) Copyist.

NARA 666

JAN. 19
6251956
C1891

to date Sept. 26, 1865. Has
Satisfied the Mustering Officer
that he is not indebted to
the Government. Mustered out
in obedience to Circular No. 44
War Dept. A. G. O. 1865 = their
Services being no longer required
and discharged to remain in the
State - under G. O. No. 10 Mil. Div.
of the Gulf 1865.

NARA 661

L | 3 | U.S.C.T.

Romulus C. Loveridge

1 Lieut, Co. B, 3 Reg't U. S. Col'd Infantry.

Appears on **Co. Muster-out Roll,** dated

Jacksonville, Fla. Oct 31, 1865.

Muster-out to date ...., 186 .

Last paid to ...., 186 .

Clothing account:

Last settled ...., 186 ; drawn since $...... 100

Due soldier $........ 100; due U. S. $........ 100

Am't for cloth'g in kind or money adv'd $...... 100

Due U. S. for arms, equipments, &c., $........ 100

Bounty paid $........ 100; due $........ 100

Remarks: Officer who ceased to belong to this Company.

Book mark: ....

---

(861) W. H. Jackson
Copyist.

NARA 662

L. | 3 | U.S.C.T.

Romulus C. Loveridge
Capt., Co. H, 3 Reg't U.S.C.T.

NOTATION.

Book mark: L. 21 C. T. 1863

Record and Pension Office,

WAR DEPARTMENT,

Washington, Apl. 20, 1895.

Under the provisions of the act of Congress, approved June 3, 1884, and the acts amendatory thereof, this officer is considered by this Department as commissioned to the grade of

Captain

Co. H, 3 Reg't U.S. Colored Troops

to take effect from Sept. 1, 1865,

vice Sherman Conant, promoted

See also Co. H. 2d Conn. H.A.

A.G.N.

(442) *Copyist.*

L | 3 | U.S.C.T.

Romulus C. Loveridge

1st Lieut., Co. B, 3 Reg't U.S.C. Inf.

NOTATION.

Book mark: L-21-CJ-1863

The Adjutant General's Office,

WAR DEPARTMENT,

Washington, Aug. 26, *1910.*

Under the provisions of the act of Congress, approved February 24, 1897, this officer is held and considered by this Department to have been mustered into the service of the United States in the grade of 1st Lieut.,

Co. B, 3 Reg't U.S.C. Inf.,

to take effect from July 22, 1863, to fill an original vacancy.

W. W. Gibson

(A. G. O. 188) *Copyist.*

NARA GSA

Loveridge, Romulus C.

Capt., Co. H, 3 Reg't U. S. C. T.,

6 Enclosures.

Bed Cards	Final Statements
Burial Records	Furloughs or L. of A
Certs. of Dis. for Discharge	Med. Certificates
C. M. Charges	Med. Des. Lists
Descriptive Lists	Orders 1
Discharge Certificates	Pris. of War Record
Enlistment Papers	Resignations 1

Other papers relating to—

Admission to Hosp'l	Furlough or L. of A 1
Casualty Sheet	Med. Examination
Confinement	Misc. Information 2
Contracts	Pay or Clothing
Death or Effects	Personal Reports 1
Desertion	Rank
Discharge from Hosp'l	Transfer to Hosp'l
Discharge from Service	Transfer to V. R. C.
Duty	Transportation

NARA 663

MICROFILM PUBLICATION M 1845

COMPILED MILITARY SERVICE RECORDS
OF VOLUNTEER UNION SOLDIERS WHO SERVED WITH
THE UNITED STATES COLORED TROOPS (USCT)
THIRD INFANTRY

PERSONAL PAPERS' TARGET SHEET

PLEASE NOTE THE CHECKED INFORMATION ABOUT THE PERSONAL PAPERS IN THIS FILE:

☐ NO PERSONAL PAPERS WERE FOUND IN THIS FILE WHEN THE RECORDS WERE ARRANGED FOR MICROFILMING.

☒ 7 PERSONAL PAPER(S) FOUND IN THIS FILE WHEN THE RECORDS WERE ARRANGED FOR MICROFILMING.

Hd Qrs Montgomery Brig
Feb 13th 1864.

S.O. No 40

1st Lieut. D. C. Forwidge relieved from duty as A.D.C. and appointed A.A.A. Genl

Head Quarters Montgomery's Brigade
Jacksonville Florida
February 13th 1864

Special Order
No. 40

1st Lt. R. C. Loveridge 3rd U.S.C.T. is hereby relieved of duty as Act. A.D.C. and announced as Act. Asst. Adj't Genl Montgomery's Brigade. and will be obeyed respected accordingly.

James Montgomery
Col. 2nd S.C. Vols. Comdg. Colored Brigade

Office of Provost Mar

Fernandina Fla Feb 10/65

Lt. R. C. Loveridge

3rd U.S.C.T. & Pro. Mar.

Forwards to Capt. J. W. Johnson letter of transmittal in Regard to 1 prisoner forwarded to him.

Mr. McEntire

late Capt. U.S.C.T.

Office of Provost Marshal
Fernandina Fla. February 10/65

Captain –

I have the honor to forward to you by direction of Capt. F. M. Webster Comdg Post a Mr. McEntire – late a Capt. in the 35th U. S. C. T.

Very Respectfully your Obt Svt
R. C. Lovenidge
1 Lt. 3rd U. S. C. T.
Provost Marshal

To

Capt. James W. ~~Webster~~ Johnson
3rd U. S. C. T.
Provost Marshal D. F. Dept. South
Jacksonville Fla.

NARA 670

557. Office Pro Mar
Fernandina Fla
May 20th 1865

L. R. B. 43. L. (DF) vol 2.

Loveridge R. C.
1st Lieut 3rd U.S.C.T.
Actg Pro Mar

Respectfully request a leave of absence for (30) Days

Hd. Qrs. U.S. Forces Fort Clinch Fla. May 22nd 1865
Respectfully forwarded
Approved
Frank W. Webster
Capt 3rd U.S.C.T.
Comdg Post.

HEAD QUARTERS, DIST. OF FLORIDA,
H.Q. E.M.B.
4th Separate Brigade, D. S.
JACKSONVILLE, Fla. May 25 1865
Respy forwarded Approved
Not to leave the Dist without reporting at these Head Qrs
Hughes
Brig Gen Vol

RECEIVED HD QRS
MAY
25
1865
DIST OF FLA. S.

RECEIVED HD QRS
MAY
28
1865
DEPT. SOUTH

NARA 671

Office Provost Marshal
Fernandina Fla. May 20th 1865.

Major:-

I have the honor to request a leave of absence for thirty (30) days in order to visit my home in the North.

I entered the U. S. service in the fall of 1862, and have received during this period but one leave of absence and that for four (4) days only.

Very respectfully,
Your obt. Svt.
R. C. Lovendge
1st Lt. 3d U.S.C.T. &
Provost Marshal

Major W. L. M. Burger
Asst. Adjt. Genl D.S.

NARA 672

Loveridge, Ale.
Priv.; Co. ____, 3 Reg't Wsc T.

Leave of Absence Papers

(File mark: L. 18 C. T. L. A. B., 1865.)

Cannot be found on Leave of Absence File. Investigation shows that the papers were disposed of as indicated below:

Returned ____________________

Filed with ____________________

Vide E R B V 3 a 414

~~A. L. 21 of 63~~

Not found

Leave of Absence transferred to Personal Paper files

(461)

NARA 673

S 29 C. T. R. B. 1865

Syracuse N. Y.
June 19th. 1865.

Lovridge R. C.
1st. Lt. 3d U. S. C. T.

Tenders his resignation as 1st. Lt. 3d U. S. C. T. and for reasons given requests that its acceptance bear date July 10th. 1865.

Recd A G O June 21, 65

War Dept. A. G. Office,
June 21st, 1865.

Respectfully returned to 1st Lieut. R. C. Loveridge, 3rd U. S. Col'd Troops, No. 169 Wall St. New York City.

Officers absent from their commands, tendering their resignations on account of any other reason than that of physical disability, must in all cases forward them through the prescribed military channels.

By order of the Secretary of War:

C. W. Foster
A. A. Genl. Vols.

E. B. M. 3. M. Page 348.

Syracuse N. Y.
June 19th 1865.

Bvt. Lt. Col. C. W. Foster
Chief of Bureau for Colored Troops

Colonel:—

I have the honor to hereby tender my resignation as 1st Lt. 32d. U.S.C.T. on condition that the settlement of my account with the Government be deferred until I obtain the necessary certificates from the proper Departments.

I would respectfully state that I am now on a leave of absence of thirty days commencing June 10th/65. That I entered the service in the Fall of 1862. and having been absent from my regiment but four days, since my enlistment. I would respectfully request, that the acceptance of my resignation be dated July 10th 1865.

Very respectfully,
Your obedient servant,
R. C. Lovewell
1st Lt. 32d U.S.C.T.

P. O. Address
69 Wall St. New York.

NARA 675

I Romulus C. Lovering do solemnly swear, that I received on the twenty sixth day of September 1865 a Commission as Captain in the Third U. S. C. Infantry. Volunteers - bearing date of September 1st 1865. that since the 26th day of September 1865 I have actually performed the duties of Captain in said Co., on detached service - as Provost-Marshal Jacksonville Fla., that I was last borne on the muster rolls of Co. "B" in the aforesaid Regt as 1st Lieut - on the 31st day of August 1865 - and that I have made every effort to be mustered without success, from the fact of there being no Mustering Officer on duty at this post. —

Romulus C. Lovering
Capt. Co. H. 3d U. S. C. Infantry.

I being in Command of the 3d U. S. C. T in the time covered by the above affidavit do solemnly swear that the above statement of Capt. Romulus C. Lovering is true and correct - to the best - of my knowledge & belief

F. W. Bardwell
Col. 3. U. S. C. T.
Comdg. Regt.

Personally came and appeared before me the above named Capt. R. C. Lovering & Jno W Bardwell. who have sworn and subscribed to the above statement at Jacksonville Fla this 28th day of Oct. 1865 —

W M Robinson.
Capt. 10th U. S. C. A. & Comdg of Musters

NARA 676

Adjutant General's Office,
OFFICIAL BUSINESS.
Saml Breck
Assistant Adjutant General.

WASHINGTON

POST
JUN 20

1st Lieut. R. C. Loveridge
3d U. S. Colored Troops.
No. X69. Wall. Street
New York. City.

No number 169 Wall
Not for 64

NARA 677

Cox, Denton

Co D, 3 U.S. Col'd Inf.

Private | Corporal

CARD NUMBERS.

1 62559995	26
2 62561108	27
3 62560411	28
4 62570093	29
5 90608819	30
6	31
7	32
8	33
9	34
10	35
11	36
12	37
13	38
14	39
15	40
16	41
17	42
18	43
19	44
20	45
21	46
22	47
23	48
24	49
25	50

Book Mark:

See also

NARA 678

D.	3	U.S.C.T.

Denton Cox.

........, Co. D, 3 Reg't U. S. Col'd Inf.

Appears on

Company Descriptive Book

of the organization named above.

DESCRIPTION.

Age 33 years; height 6 feet — inches.

Complexion Brown

Eyes Black; hair Black

Where born Cadiz Ohio

Occupation Farmer.

ENLISTMENT.

When July 4th, 1863.

Where Philada Penna

By whom Lt. Col. Wagner; term 3 y'rs.

Remarks:

J. Springsmith
Copyist.

(383g)

L | 3 | U.S.C.T.

Denton Lox

Pvt., Co. D, 3 Reg't U. S. Col'd Infantry.

Age 33 years.

Appears on

Company Muster-in Roll

of the organization named above. Roll dated Philada, Pa, July 26, 1863.

Muster-in to date July 4, 1863

Joined for duty and enrolled:

When July 4, 1863.

Where Philadelphia Pa

Period 3 years.

Remarks:

Book mark:

E. C. Rankin

(856) Copyist.

L | 3 | U.S.C.T.

x Denton Loy

Corpl., Co. D, 3 Reg't U. S. Col'd Infantry.

Appears on

Company Muster Roll

for July 26 to Aug't 31, 186 .

Present or absent not stated

Stoppage, $ 100 for

Due Gov't, $ 100 for

Remarks: x Entire entry cancelled

Book mark:

Parkinson, Comp'r

(358) Copyist

L | 3 | U.S.C.T.

Denton Lox

Corp., Co. D, 3 Reg't U. S. Col'd Infantry.

Appears on

Company Muster Roll

for July 26 to Aug. 31, 1863.

Present or absent

Stoppage, $ 100 for

Due Gov't, $ 100 for

Remarks: Appointed Corpl. July 25/63 Killed in Action August 26/63. Due U.S. 1 Canteen .44¢

Book mark:

E. E. Rankin

(358) Copyist

NARA 682

L | 3 | U.S.C.T.

Denton Lox

Cpl, Co. D, 3 Reg't U. S. Col'd Infantry.

Appears on **Co. Muster-out Roll,** dated

Jacksonville Fla, Oct. 31, 1865.

Muster-out to date ...., 186 .

Last paid to ...., 186 .

Clothing account:

Last settled ...., 186 ; drawn since $......100

Due soldier $.........100; due U. S. $.........100

Am't for cloth'g in kind or money adv'd $.........100

Due U. S. for arms, equipments, &c., $.........100

Bounty paid $.........100; due $.........100

Remarks: Killed in the siege of Ft. Wagner Morris Island S.C. Aug 26/63. Final statement forward. Aug. 28/63

Book mark: See 2685-1878. F.S.

(over)

Kugler
Copyist.

(361)

Lox, Denton,

Corpl. Co. D, 3 Reg't U. S. C. Inf

2 Enclosures.

Bed Cards	Descriptive Lists
Burial Records	Final Statements /
Certs. of Dis. for Discharge	Furloughs
C. M. Charges	Med. Des. Lists
Med. Certificates	Orders

Other papers relating to—

Admission to Hosp'l	Furlough
Casualty Sheet ~~(Officer's)~~ /	Med. Examination
Confinement	Misc. Information /
Contracts	Pay or Clothing
Death or Effects	Personal Reports
Desertions	Rank
Discharge from Hosp'l	Transfer to Hosp'l
Discharge from Service	Transfer to V. R. C.
Duty	Transportation

NARA 68A

V Co. D.

16.

FINAL STATEMENT

OF

Corporal Desilton Lox

3rd Reg't of U.S. Colored Troops

VOLUNTEERS.

Died Aug 26/63

NOTE 1.—*Two* of these certificates (or duplicates) are to be given to each volunteer soldier who may be discharged previously to the discharge of his company, that he may at once receive from the Paymaster the pay, &c., due him, and the captain or other officer commanding the company will certify to the act of the delivery of the duplicate certificates; on these certificates the Soldier is "entitled to" his *discharge*, and should also present his discharge to the Paymaster to have the payment endorsed on it. The discharge is to be given back to the Soldier by the Paymaster; the latter only retaining as his voucher the duplicate certificates.

NOTE 2.—If the Soldier is entitled to pay for the use of his horse, the Company Commander will certify to that fact, and also to the time he has pay due for having been so mounted on his own horse.

NOTE 3.—Amounts due the Sutler and Laundress must be entered on the Muster Roll on which the death, desertion, &c., is reported, as well as on the final statement, otherwise the amount cannot be collected from the United States.

NOTE 4.– This blank will be used for deceased volunteers as well as others.

Inventory and Final Stmt received before

ADJUTANT GENERAL'S OFFICE,

May 11th 1864.

Duplicate, with Inventory, sent 2d Auditor.

Ent'd on O. R. C.

Rec'd A. G. O. Sept 30, 1863,

NARA 685

I certify, on honor, that Denton Lox a Corporal of Captain J L Brower's Company (D) of the 3rd Regiment of United States Colored Troops ~~VOLUNTEERS, of the State of~~ ________, born in Cadiz State of Ohio, aged 33 years; 6 feet 0 inches high; Black complexion, Black eyes, Black hair, and by occupation a Farmer, having joined the company on its original organization at Philadelphia, and enrolled in it at the muster into the service of the United States at Philadelphia, on the 26 day of July, 1863, (or was mustered in service as a recruit, by ________, at ________, on the ________ day of ________, 186 , to serve in the Regiment,) for the term of Three years unless sooner discharged and having served HONESTLY and FAITHFULLY with his Company in South Carolina ~~to the present date, is now entitled to a DISCHARGE by reason of~~ has been killed in the trenches opposite Fort Wagner Morris Island South Carolina

The said Corporal Denton Lox was enrolled on the ~~was last paid by Paymaster~~ 4th day of July 1863 ~~to include the ________ day of ________, 186~~, and has pay due him from that time to the present date; he is entitled to pay and subsistence for TRAVELING to place of enrollment and whatever other allowances are authorized to volunteer soldiers, or militia, so discharged. He has received 28 97/100 dollars, advanced by the United States on account of CLOTHING.

There is to be stopped from him, on account of the State of ________, or other authorities for CLOTHING, &c., received on entering service, ________ /100 dollars; also, for expenses of SUBSISTENCE for TRAVELING from place of enrollment to the place of rendezvous, amounting to ________ /100 dollars: and on account of the United States for EXTRA CLOTHING received in kind from ________ and for other stoppages, viz:

____

________ amounting to ________ /100 dollars; and he has been SUBSISTED for TRAVELING to his place of enrollment, up to the ________

________, 186 .

He is indebted to ________, SUTLER, ________ /100 dollars.

He is indebted to ________, LAUNDRESS, ________ /100 dollars.

Given in Duplicate, at Morris Island, this 26 day of August, 1863.

John Lovett Brower
Captain
Commanding Company.

[A. G. O. No. 95.]

NARA 686

CASUALTY SHEET.

No. ....

Denton Loy

Corporal of Company D.

3d Regiment of U.S. Col'd Troops

State Volunteers.

NATURE OF CASUALTY.

~~Died~~ Nov. 10. 1863.

P.M. Rect.

NARA 687

CASUALTY SHEET.

Name: Denton Lex

Rank: Corporal   Company: D.   Regiment: 3

Arm: Col'd Troops   State: U.S.

Nature of Casualty: Death

CAUSE OF CASUALTY—(NAME OF DISEASE, &C.)

DEGREE OF DISABILITY.

BY WHOM CERTIFIED.

Rep. of proceeds of effects & P. M. Rect. Adj. O. to 2d Aud.

DATE OF ~~DISCHARGE~~, ~~DEATH~~, &c.

Nov. 10. 1863

PLACE OF DISCHARGE, DEATH, &c.

BY WHOM DISCHARGED.

FROM WHAT SOURCE THIS INFORMATION WAS OBTAINED.

Mem. of S. O. Rect. service page 192.

REMARKS.

Amt. proceeds $ 11.61

(Transmitted as per Rect. book.

A. J. Ball
Clerk.

(119)

754. S. M. S. 1863

Hd Qrs 3 Regt. U. S. C. Troops
Morris Island SC Dec 14-1863

Tighlman. B. C.
Col. Comdg. 3d U. S. C. Troops

Reports of casualties in 3d U. S. C. Troops desired by Major Genl Hitchcock

Hd Qrs. 3 Brig Morris I. Dec 18/63

Respectfully forwarded

(sgd.) James Montgomery
Col. Comdg Brigade

Hd Qrs. U. S. Forces
Morris Island SC.
Dec 21-/63

Respectfully forwarded.

(sgd). Alf H. Terry
Brig Genl Comdg.

Division Lock
D 3 USCT.

Recd Hd Qrs M. S. Dec 19 1865

(Copy)

H. Qrs. 5th U. S. C. T.
Morris Island S. C. Dec 14th 1863

Col. E. W. Smith
A. Adjt. Genl. Dept South

Sir:

I have the honor to transmit the report desired by Major General Hitchcock as required by your letter of Dec. 18th:

The 5th Regt U. S. Colored Troops first reported for active service Morris Island S. C. Augt 18th 1863. Since that time there have been. Killed officers, none. Enlisted men, (11) eleven.

Wounded officers, none, Enlisted men, (11) eleven

Missing, none.

These casualties have all occurred in the trenches and batteries on Morris Island S. C, in fair fight according to the usages of War. The only instance of unusual or barbarous treatment was this, – On the night of 26th Augt the Rifle pits in front of Fort Wagner were taken and a party from this Regt was sent out in advance to dig cover. Three were Killed, 2 wounded and one missing (Corpl Dentin Lock. Co "D".) – Two days afterwards his body was found by our advance Sappers, stripped and tied to the trigger of a torpedo, so that morning, it would have caused an explosion.

Probably he had in the dark, advanced beyond the proposed line and was there killed by the fire from the Fort. and his body found by the enemy and converted into a trap.

Very Respectfully Your obt. Servt.
(sgd) B. C. Tilghman
Col. 3d U. S. C. T.

Head. Qrs. Dept of the South
Folly Isl. S. C. Dec. 29. 1863
Official.
Ed. W. Smith
A. A. Genl.

Loyd, Henry D.

Co. L, 3 U.S. Col'd Inf.

Private Private

CARD NUMBERS.

1	625360 1	26	
2	625368 4	27	
3	625376 5	28	
4	625384 8	29	
5	625392 7	30	
6	625400 6	31	
7	625408 2	32	
8	625416 0	33	
9	625424 8	34	
10	625431 7	35	
11	625439 6	36	
12	625444 8 2	37	
13	625457 7	38	
14	625194 1	39	
15	625450 0	40	
16	9060683	41	
17		42	
18		43	
19		44	
20		45	
21		46	
22		47	
23		48	
24		49	
25		50	

Book Mark:

See also

S. 1361575. A. W. Sybe
S. 1434635 and W. D.
S 1519268 Po Ivy
S. 1998705. P.O. Mel
M.S. 1106440

NARA 693

L | 3 | U.S.C.T.

Henry D Loyd

Co. B, 3 Reg't U. S. Col'd Inf.

Appears on

Company Descriptive Book

of the organization named above.

DESCRIPTION.

Age 30 years; height 5 feet 7 inches.

Complexion black

Eyes black; hair black

Where born Chester Co Penn

Occupation Laborer

ENLISTMENT.

When June 30, 1863

Where Philadelphia

By whom Lt Col Wagner; term 3 y'rs.

Remarks:

Hennessy

(383g) Copyist.

L. | 3 | U.S.C.T.

Henry D. Loyd

Priv, Co. B, 3 Reg't U. S. Col'd Infantry.

Age 30 years.

Appears on

Company Muster-in Roll

of the organization named above. Roll dated Phil. Pa, Aug 7, 1863.

Muster-in to date June 30, 1863.

Joined for duty and enrolled:

When June 30, 1863.*

Where Phil. Pa.*

Period 3 years.*

Remarks:

*☞ Muster-in roll shows enrollment of all men of this company as of same date and place. See enrollment on subsequent card or cards.

Book mark:

Martin

(356c) Copyrt.

L | 3 | U.S.C.T.

Henry D. Loyd

Priv., Co. B, 3 Reg't U. S. Col'd Infantry.

Appears on

Company Muster Roll

for July & Aug, 1863.

Joined for duty and enrolled:

When June 20, 1863.*

Where Phil, Pa, *

Period 3 years.*

Present or absent Present.

Stoppage, $ 100 for

Due Gov't $ 100 for

Remarks:

* ☞ See enrollment on card from muster-in roll.

Book mark:

Martin

(858c) Copyist.

L | 3 | U.S.C.T.

Henry Loyd

Priv., Co. B, 3 Reg't U. S. Col'd Infantry.

Appears on

Company Muster Roll

for Sept Oct, 1863.

Joined for duty and enrolled:

When June 30, 1863.*

Where Phil. Pa. *

Period 3 years.*

Present or absent Present.

Stoppage, $.....100 for.....

Due Gov't $.....100 for.....

Remarks: Pay due from date of original muster.

* ☞ See enrollment on card from muster-in roll.

Book mark:

Martin

(358c) Copyist.

L. | 3 | U.S.C.T.

Henry H. Loyd

Pvt., Co. B, 3 Reg't U. S. Col'd Infantry.

Appears on

Company Muster Roll

for Nov. & Dec, 1863.

Joined for duty and enrolled:

When June 30, 1863.*

Where Phil. Pa. *

Period 3 years.*

Present or absent Present

Stoppage, $ 100 for

Due Gov't $ 100 for

Remarks: Pay due from date of original muster.

* ☞ See enrollment on card from muster-in roll.

Book mark:

Martin

(358c) Copyist.

L. | 3 | U.S.C.T.

Henry D. Loyd

Pvt., Co. B, 3 Reg't U. S. Col'd Infantry.

Appears on

Company Muster Roll

for Jan. & Feb., 186 4.

Joined for duty and enrolled:

When June 30, 186 3.*

Where Phil. Pa.*

Period 3 years.*

Present or absent Present.

Stoppage, $.....100 for.....

Due Gov't $.....100 for.....

Remarks:.....

* ☞ See enrollment on card from muster-in roll.

Book mark:.....

Martin

(858c) Copyist.

L | 3 | U.S.C.T.

Henry D. Lord

Pvt., Co. B, 3 Reg't U. S. Col'd Infantry.

Appears on

Company Muster Roll

for Mar & Apr, 186 4

Joined for duty and enrolled:

When June 30, 186 3.*

Where Philadelphia Pa *

Period 3 years.*

Present or absent Present

Stoppage, $ 100 for

Due Gov't, $ 100 for

Remarks: Stop for 1 Canteen 1 Haversack

* See enrollment on card from muster-in roll.

Book mark:

J. M. Fauly

(358c) Copyist.

L | 3 | U.S.C.T.

Henry D. Loyd

Priv., Co. B, 3 Reg't U. S. Col'd Infantry.

Appears on

Company Muster Roll

for May & June, 1864.

Joined for duty and enrolled:

When June 30, 1863.*

Where Philad. Pa *

Period 3 years.*

Present or absent Present

Stoppage, $ 100 for

Due Gov't, $ 100 for

Remarks:

* ☞ See enrollment on card from muster-in roll.

Book mark:

Washington

(358c) Copyist.

L | 3 | U.S.C.T.

Henry D. Loyd

Pvt, Co. B, 3 Reg't U. S. Col'd Infantry.

Appears on

Company Muster Roll

for May June July & Aug, 1864.

Joined for duty and enrolled:

When June 30, 1863.*

Where Philad. Pa *

Period 3 years.*

Present or absent Present

Stoppage, $ 100 for

Due Gov't $ 100 for

Remarks: Free on or before April 19th 1861.

* ☞ See enrollment on card from muster-in roll.

Book mark:

Waddington

(358c) Copyist.

NARA 702

L | 3 | U.S.C.T.

Henry D. Loyd

Priv, Co. B, 3 Reg't U. S. Col'd Infantry.

Appears on

Company Muster Roll

for Sept & Oct, 1864.

Joined for duty and enrolled:

When June 30, 1863.*

Where Phila d Pa *

Period 3 years.*

Present or absent Present

Stoppage, $ 100 for

Due Gov't $ 100 for

Remarks: Free on or before April 19" 1861 — Due soldier dif^c pay ($6 per mo.) from June 29"/63 to Apr. 30"/64

* See enrollment on card from muster-in roll.

Book mark:

Waddington
Copyist.

(858c)

L | 3 | U.S.C.T.

Henry D. Loyd

Pvt., Co. B, 3 Reg't U. S. Col'd Infantry.

Appears on

Company Muster Roll

for Sept Oct Nov & Dec, 186 4

Joined for duty and enrolled:

When June 30, 186 3.*

Where Phila Pa *

Period 3 years.*

Present or absent Present

Stoppage, $ 100 for

Due Gov't $ 100 for

Remarks: Free on or before April 19th 1861. Due soldier diff pay $6 per mo. from June 29th 1863 to Apr. 30 1864

* See enrollment on card from muster-in roll.

Book mark:

Waddington

(358c) Copyist.

L | 3 | U.S.C.T.

Henry D. Loyd

Pvt., Co. B, 3 Reg't U. S. Col'd Infantry.

Appears on

Company Muster Roll

for from Aug 31/64 to Feb 28, 1865.

Joined for duty and enrolled:

When June 30, 1863.*

Where Phila Pa *

Period 3 years.*

Present or absent Present

Stoppage, $ 100 for

Due Gov't $ 100 for

Remarks: Free on or before April 19th 1861. Due soldier dif pay from Enrolment to Apr 30th 1864

* ☞ See enrollment on card from muster-in roll.

Book mark:

Washington

(358c) Copyist.

NARA 785

L | 3 | U.S.C.T.

Henry D. Loyd

Priv, Co. B, 3 Reg't U. S. Col'd Inf.

Appears on

Company Muster Roll

for Mch & Apl 1865.

Joined for duty and enrolled:

When June 30, 1863.*

Where Phila, Pa. *

Period 3 years.*

Present or absent Present

Stoppage, $ 100 for

Due Gov't, $ 100 for

Valuation of horse, $ 100

Valuation of horse equipments, $ 100

Remarks: Free on or before Apl 19/61. Due soldier dif pay $6 per mo from enrollment to Apl 30/64

*See enrollment on card from muster-in roll.

Book-mark :

W M Jackson
Copyist.

(358c)

L | 3 | U.S.C.T.

Henry D. Loyd,

Pvt., Co. B, 3 Reg't U. S. Col'd Inf.

Appears on

Company Muster Roll

for May and June 1865

Joined for duty and enrolled:

When June 20, 1863*

Where Phila. Pa.*

Period 3 years.*

Present or absent Present.

Stoppage, $ 100 for

Due Gov't, $ 100 for

Valuation of horse, $ 100

Valuation of horse equipments, $ 100

Remarks: Free on or before Apl 19 1861 Due soldier [illegible] $6 per mo. from enrollment to Apl 30 1864.

NEXT ROLL ON FILE MUSTER OUT.

*See enrollment on card from muster-in roll.

Book-mark:

Calloway

(358c) Copyist.

L | 3 | U.S.C.T.

Henry D. Loyd

Private, Co. B, 3 Reg't U. S. Col'd Infantry.

Appears on a

Detachment Muster-out Roll

of the organization named above. Roll dated Jacksonville, Fla., Oct. 31, 1865.

Muster-out to date Oct. 31, 1865.

Last paid to June 30, 1865

Clothing account:

Last settled ×~~June 30, 1865~~; drawn since $ 100

Due soldier $ ..... 100; due U. S. $ 6 11/100

Am't for cloth'g in kind or money adv'd $ 100

Due U. S. for arms, equipments, &c., $ 100

Bounty paid $ ..... 100 due $ 100 100

Remarks: Private from Enrollment.

× As it is on the Roll.

Book mark:

O. J. Markle, Copyist.

(349)

L | 3 | U.S.C.T.

Henry D. Lloyd

Prin, Co. B, 3 Reg't U. S. Col'd Infantry.

Appears on **Co. Muster-out Roll,** dated Jacksonville, Fla, Oct. 31, 1865.

Muster-out to date ....., 186 .

Last paid to June 30, 1865.

Clothing account:

Last settled....., 186 ; drawn since $.....100

Due soldier $.....100; due U. S. $.....6 11/100

Am't for cloth'g in kind or money adv'd $.....100

Due U. S. for arms, equipments, &c., $.....100

Bounty paid $.....100; due $ 100 100

Remarks: Mustered out to remain in the South Private from enrollment. Discharge given—Will not be paid on this Roll.

Book mark: .....

W. M. Jackson

(361) Copyist.

Lukere, John

Co. L, 3 U.S. Col'd Inf.

Private | Private

CARD NUMBERS.

1 62518 02	26
2 62532 16	27
3 62533 06	28
4 62534 02	29
5 62534 78	30
6 9060590	31
7	32
8	33
9	34
10	35
11	36
12	37
13	38
14	39
15	40
16	41
17	42
18	43
19	44
20	45
21	46
22	47
23	48
24	49
25	50

Book Mark:

See also

NARA 710

S1062190-Po f. 8
S.2192.205 Po mm

L | 3 | U.S.C.T.

John Lukens

, Co. A, 3 Reg't U. S. Col'd Inf.

Appears on

Company Descriptive Book

of the organization named above.

DESCRIPTION.

Age 19 years; height 5 feet 8 inches.

Complexion Mulatto

Eyes Dark; hair Dark

Where born Virginia

Occupation Drayer

ENLISTMENT.

When , 186 .

Where

By whom ; term 3 y'rs.

Remarks: Substitute Mustered Jan 6th 1865 at West Chester, Pa. from 7th Dist

Stevenson

(383g) Copyist.

L | 3 | U.S.C.T.

John Lukens

Appears with rank of Pvt on

Muster and Descriptive Roll of a Detachment of Substitutes forwarded

for the 3 Reg't U. S. Col'd Inf. Roll dated Shelley Hill Pa Camp Wm Penn, Feb 10, 1865.

Where born Va

Age 19 y'rs; occupation Waiter

When enlisted ____, 186 .

Where enlisted ____

For what period enlisted 3 years.

Eyes Dk; hair Dk

Complexion Mull; height 5 ft. 8 in.

When mustered in Jan 6, 1865.

Where mustered in N. Chester Pa

Bounty paid $ 100; due $ 100

Where credited ____

Company to which assigned ____

Remarks: Sub for Andrew J. Hershberger Salsbury 65 Sub. Dist. 7 Enl Dist

Book mark: ____

Lewis

Copyist

Star pricked on right-
fore arm

6251802
JAN. 19
1891

L | 3 | U.S.C.T.

John Lukers

Pvt, Co. A. 3 Reg't U. S. Col'd Infantry.

Appears on

Company Muster Roll

for March & April, 1865.

Joined for duty and enrolled:

When Jan 6, 1865.*

Where Westchester Pa *

Period 3 years.*

Present or absent Present

Stoppage, $ 100 for

Due Gov't $ 100 for

Remarks: Stops - one haversack Knapsack

* ☞ See enrollment on card from muster-in roll.

Book mark:

J. L. Morris

(358c) Copyist.

L	3	U.S.C.T.

John Luckens

Pvt, Co. A. 3 Reg't U. S. Col'd Infantry.

Appears on

Company Muster Roll

for May & June, 1865.

Joined for duty and enrolled:

When Jany 6, 1865.*

Where Westchester, Pa *

Period 3 years.*

Present or absent Present

Stoppage, $ 100 for

Due Gov't $ 100 for

Remarks: Stops one painted knapsack.

* See enrollment on card from muster-in roll.

Book mark:

J. L. Morris

(358c) Copyist.

L | 3 | U.S.C.T.

Pvt John Luckers, Co. A. 3 Reg't U. S. Col'd Infantry.

Appears on

Company Muster Roll

for July & August, 1865.

Joined for duty and enrolled:

When Jany 6, 1865.*

Where Westchester, Pa *

Period 3 years.*

Present or absent Present

Stoppage, $ $\frac{}{100}$ for

Due Gov't $3 $\frac{10}{100}$ for C & G. Equipage

Remarks:

* ☞ See enrollment on card from muster-in roll.

Book mark:

J. L. Morris

(358c) Copyist.

NARA 717

L | 3 | U.S.C.T.

John Lukers

Pvt, Co. A, 3 Reg't U. S. Col'd Infantry.

Appears on **Co. Muster-out Roll,** dated Jacksonville, Fla., Oct 31, 1865.

Muster-out to date Oct 31, 1865.

Last paid to June 30, 1865.

Clothing account:

Last settled....., 186 ; drawn since $.....100

Due soldier $ 10 39/100; due U. S. $.....100

Am't for cloth'g in kind or money adv'd $.....100

Due U. S. for arms, equipments, &c., $ 0 03/100

Bounty paid $ 100 00/100; due $.....100

Remarks: Private since enlistment.

Book mark: 3657. 2d Aud. June 1/67 P. 225. P. 120. 76.

J. L. Morris

(361) Copyist.

Lukens, John

....., Co. ....., 3 Reg't U.S.C.T.

1 Enclosures.

Bed Cards	Final Statements
Burial Records	Furloughs or L. of A.
Certs. of Dis. for Discharge	Med. Certificates
C. M. Charges	Med. Des. Lists
Descriptive Lists	Orders
Discharge Certificates	Pris. of War Record
Enlistment Papers /	Resignations

Other papers relating to—

Admission to Hosp'l	Furlough or L. of A.
Casualty Sheet	Med. Examination
Confinement	Misc. Information
Contracts	Pay or Clothing
Death or Effects	Personal Reports
Desertion	Rank
Discharge from Hosp'l	Transfer to Hosp'l
Discharge from Service	Transfer to V. R. C.
Duty	Transportation

DECLARATION OF SUBSTITUTE.

I, John Lukers (col'd) desiring to ENLIST in the Army of the United States, for THREE YEARS, *Do declare*, That I am nineteen years and no months of age; that I have never been discharged from the United States service on account of disability or by sentence of a court martial; and I know of no impediment to my serving honestly and faithfully as a soldier for three years.

~~Sworn and Subscribed before me~~

GIVEN at West Chester Pa

~~Capt. & Pro. Mar. [illegible] Dist. Pa.~~ the 6th day of January AD 1865

WITNESS:

O. S. Ring

John his X mark Lukers

"Substitute not entitled to bounty 11/13.

D

No. 3

John Lukens (Col'd)

Enlisted at West Chester, Pa

As Substitute for

Andrew J. Hershberger

On the 6th day of January, 1865.

By

E. L. Christman Capt & Pro Mar

John C. Price Commissioner

R. H. Smith Surgeon

Board of Enrollment

7th Dist. of Penn'a

[illegible]

NARA 729

(No. 39.)

SUBSTITUTE
VOLUNTEER ENLISTMENT.

STATE OF Pennsylvania TOWN OF West-Chester

I, John Lukers (Col'd) born in the State of Virginia, aged Nineteen years, and by occupation a Waiter Do HEREBY ACKNOWLEDGE to have agreed with Andrew J. Hershberger, Esq., of Sadsbury twp. Chester County Pennsylvania to become his **SUBSTITUTE** in the Military Service, for a sufficient consideration paid and delivered to me, on the Sixth day of January, 1865; and having thus agreed with said Andrew J. Hershberger, I DO HEREBY ACKNOWLEDGE to have enlisted this Sixth day of January 1865, to serve as a ***Soldier*** in the **Army of the United States of America,** for the period of *THREE YEARS*, unless sooner discharged by proper authority: I do also agree to accept such bounty, pay, rations, and clothing, as are, or may be, established by law for soldiers. And I do solemnly swear that I will bear true and faithful allegiance to the ***United States of America;*** that I will serve them honestly and faithfully against all their enemies or opposers whomsoever: and that I will observe and obey the orders of the President of the United States, and the orders of the Officers appointed over me, according to the Rules and Articles of War.

SWORN and subscribed to, at West-Chester Pa
this sixth day of January 1865.
BEFORE E. L. Christman
Capt & Pro: Marshal
7th Dist. Pa

John his X mark Lukers

witness C. S. Price

We certify, on honor, That we have carefully examined the above-named Volunteer Substitute agreeably to the Regulations, and that, in our opinion, he is free from all bodily defects and mental infirmity which would in any way disqualify him from performing the duties of a soldier; that he was entirely sober when enlisted; that he is of lawful age, (not under 18 years;) and that, in accepting him as duly qualified to perform the duties of an able-bodied soldier, and as a Substitute in lieu of Andrew J. Hershberger Enrolled ~~drafted~~ in Sadsbury twp. Ches. Coy Pennsylvania, ~~186~~, we have strictly observed the Regulations which govern in such cases. This soldier has dark eyes, dark hair, Mulatto complexion; is five feet eight inches high

E. L. Christman
Capt & *Provost Marshal.*

John C. Price
Commissioner of Board.

R. H. Smith
Surgeon of Board

Board of Enrollment of 7th *Dist. of* Penn'a.

Lyman John N.

Co. A & S, 3 U.S. Col'd Inf.

Maj. Surgeon | Surgeon

CARD NUMBERS.

1 6252116	26
2 6252121	27
3 6252131	28
4 6252147	29
5 62522978	30
6 9928447	31
7 S 86 - C.T. - 1863	32
8	33
9	34
10	35
11	36
12	37
13	38
14	39
15	40
16	41
17	42
18	43
19	44
20	45
21	46
22	47
23	48
24	49
25	50

Book Mark: E.B. V. 11, P. 474 - L. 77 - V-11 - L. 7 - 73 - S 86 - C.T. - 1863.

See also

S788,259 Q vol 1
P409584-

NARA 723

L | 3 | U.S.C.T.

Jno. N. Lyman

Surg, Co. ......, 3 Reg't U. S. Col'd Inf.

Appears on

Regimental Descriptive Book

(List of Commissioned Officers)

of the regiment named above.

Rank Surgeon

Date of appointment Aug 4 1863.

Remarks Discharged on tender of resignation, Dec. 31, 1863, by order of Sec. of War. S.O. 562, Dated Dec. 19, '63.

(384)

Sabine
Copyist.

L. | 3d Regt. | U.S.C.T.

John A Lyman

Rank Major Surgeon, 3 Reg't U. S. Col'd Infantry.

Age 24 years.

Appears on

Field and Staff Muster-in Roll

of the organization named above. Roll dated Philadelphia Pa., Aug 12, 1863.

Muster-in to date Aug 12, 1863.

Joined for duty and enrolled:

When Aug 4, 1863.

Where Washington D.C.

Period 3 years.

Valuation of horse, $ 100

Valuation of horse equipments, $ 100

Remarks: Appointment of the Secty of War dated Aug 4th 1863 and accepted Aug. 5th 1863.

Book mark:

F. C. Dickerson.

(354) Copyist.

L. | 3 Regt | U.S.C.T.

John N. Lyman.

Rank Surgeon, 3 Reg't U. S. Col'd Infantry.

Appears on

Field and Staff Muster Roll

for Aug. 31, 1863.

Present or absent Present

Stoppage, $ 100 for

Due Gov't, $ 100 for

Valuation of horse, $ 100

Valuation of horse equipments, $ 100

Remarks:

Book mark:

F. C. Dickerson.

(357) Copyist

NARA 726

L. | 3d | U.S.C.T.

John N. Lyman,

Rank Surgeon, 3 Reg't U. S. Col'd Infantry.

Appears on

Field and Staff Muster Roll

for Sept. & Oct., 1863.

Present or absent Absent.

Stoppage, $ 100 for

Due Gov't, $ 100 for

Valuation of horse, $ 100

Valuation of horse equipments, $ 100

Remarks: Absent sick.

Book mark:

F. C. Dickerson.
Copyist

(857)

L | 3d Regt. | U.S.C.T.

John N. Lyman.

Rank Surg, 3 Reg't U. S. Col'd Infantry.

Appears on

Field and Staff Muster Roll

for Nov. & Dec, 1863.

Present or absent Absent.

Stoppage, $ 100 for

Due Gov't, $ 100 for

Valuation of horse, $ 100

Valuation of horse equipments, $ 100

Remarks: Resignation accepted. Special Order No 562. War Dept. Dec. 19th, 1863.

Book mark:

F. C. Dickerson.

(357)

Copyist

L. | 3d Regt | U.S.C.T.

John N. Lyman.

Rank Sergt., 3 Reg't U. S. Col'd Inf.

Appears on

Field and Staff Muster-out Roll

of the organization named above. Roll dated Jacksonville Fla, Oct 31, 1865.

Muster-out to date ....., 186 .

Last paid to ....., 186 .

Clothing account:

Last settled....., 186 ; drawn since $.....100

Due soldier $.....100; due U. S. $.....100

Am't for cloth'g in kind or money adv'd $.....100

Due U. S. for arms, equipments, &c., $ 100

Bounty paid $.....100; due $.....100

Remarks: Discharged on tender of resignation Dec. 31st 1864 per S.O. 562. from Sec. of War

Book mark: Discharged Dec. 19/63 over.

F. C. Dickerson,

(360) Copyist.

NARA 729

JAN. 19 1891

6252298

E. B. V11 P474 & L.
77. V.11. C. 7.75.
3456. C.

NARA 738

L. | 3 | U.S.C.T.

John H. Lyman

Surgeon, Co. ......, 3 Reg't U.S. Colored T.

NOTATION.

~~E.B. 11.474 L. 77 Oct. 1875 with~~
Book mark: S. 86 C.T. 1863

War Department,

Adjutant General's Office,

Washington, October 19, 1875.

Discharged December 19. 1863

S.O. 562. War Dept. Adj. O Dec 19. 63

A. M. Muzzy
(438) Copyist.

NARA-731

Lyman, John N.

Surg, Co. , 3 Reg't U. S. C. T.

9 Enclosures.

Bed Cards	Final Statements
Burial Records	Furloughs or L. of A
Certs. of Dis. for Discharge	Med. Certificates 5
C. M. Charges	Med. Des. Lists
Descriptive Lists	Orders
Discharge Certificates	Pris. of War Record
Enlistment Papers	Resignations 1

Other papers relating to—

Admission to Hosp'l	Furlough or L. of A 2
Casualty Sheet	Med. Examination
Confinement	Misc. Information 1
Contracts	Pay or Clothing
Death or Effects	Personal Reports
Desertion	Rank
Discharge from Hosp'l	Transfer to Hosp'l
Discharge from Service	Transfer to V. R. C.
Duty	Transportation

NARA 732

Lyman John N.

______, Co. ______, 3 Reg't USC I

12 Enclosures.

Bed Cards	Final Statements
Burial Records	Furloughs or L. of A.
Certs. of Dis. for Discharge	Med. Certificates 5
C. M. Charges	Med. Des. Lists
Descriptive Lists	Orders 3
Discharge Certificates	Pris. of War Record
Enlistment Papers	Resignations 1

Other papers relating to—

Admission to Hosp'l	Furlough or L. of A. 2
Casualty Sheet	Med. Examination
Confinement	Misc. Information 1
Contracts	Pay or Clothing
Death or Effects	Personal Reports
Desertion	Rank
Discharge from Hosp'l	Transfer to Hosp'l
Discharge from Service	Transfer to V. R. C.
Duty	Transportation

NARA 733

MICROFILM PUBLICATION M 1845

COMPILED MILITARY SERVICE RECORDS
OF VOLUNTEER UNION SOLDIERS WHO SERVED WITH
THE UNITED STATES COLORED TROOPS (USCT)
THIRD INFANTRY

PERSONAL PAPERS' TARGET SHEET

PLEASE NOTE THE CHECKED INFORMATION ABOUT THE PERSONAL PAPERS IN THIS FILE:

☐ NO PERSONAL PAPERS WERE FOUND IN THIS FILE WHEN THE RECORDS WERE ARRANGED FOR MICROFILMING.

☒ 12 PERSONAL PAPER(S) FOUND IN THIS FILE WHEN THE RECORDS WERE ARRANGED FOR MICROFILMING.

Lo. 1 - 4² Brig.

Surgeon J. N. Lyman, of the 3rd Regt U.S. Vols, having applied for a certificate on which to ground an application for leave of absence, I do hereby certify that I have carefully examined this officer, and find that he is suffering from an attack of Acute Dysentery of ten days standing -

And that, in consequence thereof, he is, in my opinion, unfit for duty. I further declare my belief that he will not be able to resume his duties in a less period than twenty days - I would therefore recommend leave of absence within the Department for that length of time

Morris Island S.C.
Sept. 17th 1863

Lincoln R. Stone
Surgeon 54th Mass Vols.

NARA 736

B.609 L. Morris I. S.C.

504

Morris Island S.C.
L.1. 4th Brig. Sept 18th 1863

Lyman John N.
Surgeon 3d U.S.C.T.

Application for 20 days leave of absence on Surgeons cer-tificate [EB. 61]

One Enclosure

Approved & Resp'y forwarded.
B. C. Tilghman
Col: 3d U.S.C.T.

Morris Island S.C. Sept. 19th 1863
Respectfully forwarded
James Montgomery
Col. Comdg. 4th Brigade

Head Quarters U.S. Forces
Morris Isld. S.C. Sept. 19. 1863
Respectfully referred to Surgeon C. J. H. Buzzell, 3rd N.H. Vols. Recorder of Medical Examining Board, who will cause the within named Surgeon Lyman 3d U.S.C.T. to appear before the Board as early as practicable
By Order of
Brig. Gen. Alfred H. Terry
Adrian Terry
Capt. & A.A. Genl.

Recd. H.d. Q. Morris I. S.C. Sept. 20. 1863

Head Quarters U.S. Forces
Morris Island S.C. Sept. 20, 63
Respectfully forwarded.
Alf. H. Terry
Brig Genl
Comg Post

883. Sept. 18th
Lyman. John N. Surgeon 3. U.S.C.T.

Application for 20 days leave of absence on Surgeon's Certif. of disability.

Approved & Resp'y forwarded.
B. C. Tilghman.
Col: 3d U.S.C.T.

Leave of absence for 20 days without the Dept is hereby granted Surg John L Lyman 3d U.S.C.T. on surg certif ~~of disab~~

NARA 737

Morris Island, S. C. Sept 18th 1863.
Hosp't Dept. 3rd Regt. U. S. Col'd Troops

Lt. Col. Ed. W. Smith
A. A. Genl. Dept. South.

Sir I have the honor to request a leave of absence for twenty days to visit Beaufort. S. C. on account of ill health. Surgeons Certificate of Disability for Duty enclosed.

Very respectfully
Your obt Servt —
John N. Lyman
Surgeon 3rd U. S. C. Troops

NARA 738

490

Beaufort S.C. Oct. 3rd 1863

Application for leave of Absence

Surg. John Lyman 3rd U.S. Col. Vols

Hd. Qrs. U. S. Forces
Port Royal Island
Beaufort S.C.
Oct. 3. 1863

E-13-273- H.Q. U.S.F.P.R.I. 1863

Respectfully Forwarded

R. Saxton

Brig. Genl. Commdg.

Granted

Special order
554/5.

NARA 739

U.S. General Hospital No 2
Beaufort S.C. Oct 3 1863

Col

I respectfully ask leave of Absence for the benefit of my health. referring you to the accompanying Surgeons Certificate

Very Respectfully
Your Obedient Servant
John N. Lyman
Surg" 3d U.S. Col'd Vols"

Lt Col Edw W. Smith
Asst Adjt Genl
Dept of the South

Surgeons Certificate

In the case of

Surg John Lyman 3rd Ill Vol Vol

Approved

F W Hayden
Surgeon U.S. Vols
Pres't Med. Board.

A. C. Benedict Surg U S Vols
Recorder Med Board

0

Surgeon's Certificate

Surgeon John Lyman 3rd U. S. Col. Infantry Vols. having applied for a certificate on which to ground an application for a leave of Absence I do hereby certify that I have carefully examined the above named officer and find that he is suffering with Chronic Dysentery and extreme debility resulting therefrom. And that in consequence thereof he is unfit for duty. And I further declare my belief that he will not be able to resume his duties in a less period than forty days, and that a change of climate is necessary to save life.

Dated at Beaufort S.C.
this 3rd day of Oct. 1863

A. C. Benedict
Surgeon U.S. Vols.

NARA 742

Beaufort S. Carolina
Oct. 23d 1863
L. 8. C.T. R.B. 1863

John A. Lyman
Surgeon 3d U.S.C.T.

Tenders his Resignation

Reason. Ill health.

Encloses Surgeons Certificate
~~With 280/63.~~

(2 Enc.)

Note - See par. 26. S.O.
562 - 1863

file

John A. Lyman was enrolled on the 4th of August and mustered into the service of the U.S. as surgeon of the 3d U.S. C.T. to serve three years or during the war.
On muster roll of F. & Staff of said regt for Aug 31st he is reported present for duty. On roll for Sept & Oct (latest on file) "absent sick".

Recd. A.G. Off. Dec 18th/63
[illegible] Taggart [illegible]

NARA 793

General Hospital No. 2. Beaufort S. Carolina
Oct. 23d 1863

Brig.d General L. Thomas
Adjutant General U.S.A.
Sir:

I have the honor to tender my resignation as Surgeon of the 3d U.S. Col.d Troops — based on reasons set forth in accom-panying Surgeons certificate.

I am, General, very respectfully
Your Obed.t Servt
John H. Lyman
Surgeon 3d U.S. Col.d Troops

Beaufort S.C. Oct 24. 1863

Surgeon's Certificate
in the case of

John N. Lyman
Surgeon 3rd U.S. Cold. Infty.

Approved
J. V. Hayden
Surgeon U.S. Vols.
President Med. Ex Board

A. C. Benedict Surg U.S.V.
Recorder Med. Ex Board

NARA 745

Surgeon's Certificate

John Lyman Surgeon 3rd U.S. Cold. Infantry Regt. having applied for a Certificate on which to ground his Resignation. I do hereby certify that I have carefully examined this Officer and find that he is suffering from "Chronic Dysentery" and debility resulting therefrom, and in consequence thereof he is in my opinion unfit for Military service. He has had repeated attacks of Chronic Diarrhoea and Dysentery during the past two years. I further declare my belief that he will not be fit for Active service in a less period than One year. I would respectfully recom=mend that his resignation be accepted in order to save life.

Dated at Beaufort S.C.
this 24th day of October 1863

J W Applegate
Asst Surgeon U.S. Vols.

NARA 746

506

General Hosp.l No: 2
Beaufort S.C.
Oct: 26th 1863

John P. [illegible]
Surgeon U. S. Col.d Troops

Asks if any action has been taken upon his application for Leave of absence, made out and forwarded Oct: 2nd 1863.
Earnestly requests to be sent North, on account of his failing health. Has had Chronic Diarrhoea for two years and states that unless ordered North, cannot live long. Also states that his resignation has been written, and is only awaiting certificate from Washington, before forwarding the same.

E. B. – 317 – H – [illegible] – 8 [illegible] – P – R – 2 – 1863

Respectfully forwarded
J. Dayton [illegible]
Brig. [illegible]
Com.d [illegible]

Head Quarters Dept. South
Folly Island Oct 29/63
E.B. 2208 DS1 1863
Respectfully referred to Surgeon Whitz Med. Dir. D.S.
By Command of
Maj. Gen. Gillmore
W. L. M. Burger
A.A.G.

Recommended to be sent North –
[illegible]
Med [illegible]
Dept [illegible]

Grant leave of absence 20 days while awaiting arrival of papers

Q. A. Gillmore
Maj Genl.

S0554

HARM 747

Genl Hospital Beaufort S. Carolina Oct. 26th 1863

Lt. Colonel E. Smith
Asst. Adjt. Genl. Folly Island S.C.

Sir:

Will you be kind enough to inform me if any action has yet been taken upon my application for a leave of absence to go North, in consequence of ill health?—

It was made out Oct. 2nd and forwarded to you through the A. Adjt. Genl. here—

I am in a very delicate state of health having Chronic Dysentery of which I have had repeated attacks, and scarcely been free from, except about four months previous to my coming to this Department for the last two years, during which time I have been in the service — I am now rapidly failing, and I am confident that unless I can get North that I can not live long—

Upon the recommendation of the Medical Examining Board I have made out my Resignation which is is now in the A. Adjt. Genl's Office, here and will be forwarded to you as soon as I receive the proper Certificates of non indebtedness from the Chief of Ordnance and Second auditor

NARA 748

in Washington — Now, owing to my application for leave of absence having so long ago been sent in, and more especially owing to my delicate health, and the certainty that I will surely die if obliged to remain long in this Department, can I not be sent North at once, and then await the result of my resignation? By granting my request you will confer upon me the greatest favor imaginable.

I am, Colonel Very Respectfully
Your Obedt Servt
John N. Lyman,
Surgeon 3d U. S. Colored Troops

L. C. C. T. 1863,

Pulaski N. Y. Nov 28th/63

~~Wait Sec/63.~~

John N. Lyman,

Surg. 3d U. S. C. Troops,

Surgeons Certificate.

Recd. A.G.O. Dec 1st/63,

NARA 750

I hereby Certify that I have examined Surgeon John N Lyman of 3d N.S.C.T and find he has Chronic Diarrhea that he is very weak and unable to travel I therefore request that his present leave of absence which expires Dec 1st 1863 be extended twenty days

Dated Pulaski Nov 28d 1863

Frank S Lord M D

State of New York
County of Oswego }

On this 28d day of November 1863 before me personally appeared the above named Frank S Lord and made oath that he executed the foregoing Certificate and that the said Certificate is true and correct - And I certify that the said Frank S Lord is a Physician and Surgeon of large practice and reputed Skill residing at Pulaski in said County And that no Army Surgeon is or resides in this vicinity

B. F. Rhodes
Justice of the Peace

NARA 751

L. 10. C.O. L.A. 1863.

Pulaski. N.Y.
Dec 19th/63.
~~Wash. Dec 6/63.~~

John N. Lyman
Surg. 3rd U.S. C. Troops

Surgeons Certificate

Rec'd. A.G.O. Dec 23/63

NARA 752

I hereby certify that I have this day carefully examined John N. Lyman Surg. 3rd U.S. Col'd Troops, and find him suffering from Chronic Diarrhoea and general debility resulting therefrom, that he is weak and unable to travel.

I would therefore request that his present leave of absence, which expires Dec. 20th 1863 be extended twenty days –

Dated Pulaski Dec. 19th 1863.

Frank S. Low M.D.

State of New York
County of Oswego

On this 19th day of December 1863 before me personally appeared the above named Frank S. Low and made oath, that he executed the foregoing certificate, and that the said certificate is true and correct – And I certify that the said Frank S. Low is a Physician and Surgeon of large practice, and reputed skill, residing at Pulaski in said County and that no Army Surgeon is or resides in this vicinity –

B. F. Rhodes
Justice of the Peace

Lyman John W.
Surgeon 9th N. C. V.

NARA 704

SPECIAL ORDERS, No. 562.

WAR DEPARTMENT,
ADJUTANT GENERAL'S OFFICE,
Washington, December 19th, 1863.

(Extract.)

* * * * *

26. Surgeon *John N. Lyman*, 3d U. S. Colored Troops, having tendered his resignation, on account of physical disability, is hereby honorably discharged the service of the United States, with condition that he shall receive no final payments, until he has satisfied the Pay Department that he is not indebted to the Government.

* * * * *

By order of the Secretary of War:

E. D. TOWNSEND,
Assistant Adjutant General.

OFFICIAL:

Assistant Adjutant General.

Major Foster (

NARA 753

John N. Lyman
3 U.S.C.T.

562
(26)

562
26

SPECIAL ORDERS, No. 562.

WAR DEPARTMENT,
ADJUTANT GENERAL'S OFFICE,
Washington, December 19th, 1863.

(Extract.)

* * * * *

26. Surgeon *John N. Lyman*, 3d U. S. Colored Troops, having tendered his resignation, on account of physical disability, is hereby honorably discharged the service of the United States, with condition that he shall receive no final payments, until he has satisfied the Pay Department that he is not indebted to the Government.

* * * * *

By order of the Secretary of War:

E. D. TOWNSEND,
Assistant Adjutant General.

OFFICIAL:

E D Townsend
Assistant Adjutant General.

Paymaster General
copy

NARA 757

J. N. Gyman

3 U.S.C.I.

NARA 738

Geo: Duplicate received 27/12/83.

SPECIAL ORDERS, No. 562.

WAR DEPARTMENT,
ADJUTANT GENERAL'S OFFICE,
Washington, December 19th, 1863.

(Extract.)

* * * * *

26. Surgeon *John N. Lyman*, 3d U. S. Colored Troops, having tendered his resignation, on account of physical disability, is hereby honorably discharged the service of the United States, with condition that he shall receive no final payments, until he has satisfied the Pay Department that he is not indebted to the Government.

* * * * *

By order of the Secretary of War:

E. D. TOWNSEND,
Assistant Adjutant General.

OFFICIAL:

E D Townsend
Assistant Adjutant General.

Copy of the
circuit

NARA 739

749

Lynn George

Co. L, 3 U.S. Col'd Inf.

Private

CARD NUMBERS.

1	6226 1922	26	
2	6226 2005	27	
3	6226 2086	28	
4	6226 2166	29	
5	6226 2243	30	
6	6226 2318	31	
7	6226 2394	32	
8	6226 2468	33	
9	6226 2537	34	
10	6226 2613	35	
11	6226 2696	36	
12	6226 2778	37	
13	6226 2868	38	
14	6226 2954	39	
15	9061436	40	
16		41	
17		42	
18		43	
19		44	
20		45	
21		46	
22		47	
23		48	
24		49	
25		50	

Book Mark:

See also

L. | 3 | U.S.C.T.

George Lynn

, Co. I, 3 Reg't U. S. Col'd Inf.

Appears on

Company Descriptive Book

of the organization named above.

DESCRIPTION.

Age 34 years; height 5 feet 8 inches.

Complexion Brown

Eyes Black; hair Black

Where born Madison Co Ky.

Occupation Teamster

ENLISTMENT.

When July 21, 1863.

Where Philada. Pa.

By whom Lt Col. Wagner, term 3 y'rs.

Remarks:

Dayett

(383g) Copyist.

L | 3 | U.S.C.T.

George Lynn

Priv., Co. L, 3 Reg't U. S. Col'd Infantry.

Age x years.

Appears on

Company Muster-in Roll

of the organization named above. Roll dated Philad^a Pa. July 26, 1863.

Muster-in to date July 21, 1863

Joined for duty and enrolled:

When July 21, 1863.

Where Philadelphia Pa.

Period 3 years.

Remarks: Mustered by Capt. Sergeant U.S.A. July 21, 1863.

+ Roll tom

Book mark:

C. E. McLaughlin

(856) Copyist.

L | 3 | U.S.C.T.

George Lynn

Priv., Co. I, 3 Reg't U. S. Col'd Infantry.

Appears on

Company Muster Roll

for July 26 to Aug. 31, 1863.

Present or absent Present

Stoppage, $ 100 for

Due Gov't, $ 100 for

Remarks:

Book mark:

C. E. McLaughlin

(858) Copyist

L | 3 | U.S.C.T.

George Lynn

Priv., Co. I, 3 Reg't U. S. Col'd Infantry.

Appears on

Company Muster Roll

for Sep. & Oct., 1863.

Present or absent Present

Stoppage, $ 100 for

Due Gov't, $ 100 for

Remarks:

Book mark:

C. E. McLaughlin

(858) Copyist

L | 3 | U.S.C.T.

George Lynn

Priv., Co. I, 3 Reg't U. S. Col'd Infantry.

Appears on

Company Muster Roll

for Nov. & Dec., 1863.

Present or absent Present

Stoppage, $ 100 for

Due Gov't, $ 100 for

Remarks:

Book mark:

C. E. McLaughlin

(858) Copyist

L | 3 | U.S.C.T.

George Lynn

Priv., Co. I, 3 Reg't U. S. Col'd Infantry.

Appears on

Company Muster Roll

for Jan. & Feb., 1864.

Present or absent Present

Stoppage, $ 100 for

Due Gov't, $ 100 for

Remarks:

Book mark:

C. E. McLaughlin

(358) Copyist

G | 3 | U.S.C.T.

George Lynn

Pvt., Co. L, 3 Reg't U. S. Col'd Infantry.

Appears on

Company Muster Roll

for Mar & Apl, 1864.

Present or absent Present

Stoppage, $ 100 for

Due Gov't, $ 100 for

Remarks:

Book mark:

S Moore

(358) Copyist

L | 3 | U.S.C.T.

George Lynn

Pvt, Co. I, 3 Reg't U. S. Col'd Infantry.

Appears on

Company Muster Roll

for May & June, 1864.

Present or absent Present

Stoppage, $ 100 for

Due Gov't, $ 100 for

Remarks:

Book mark:

(858) Copyist

NARA 768

L | 3 | U.S.C.T.

George Lyam

Pvt, Co. I, 3 Reg't U. S. Col'd Infantry.

Appears on

Company Muster Roll

for July + Aug, 1864

Present or absent Present

Stoppage, $ ____ 100 for ____

Due Gov't, $ ____ 100 for ____

Remarks: Free on or before Apl. 19, 1861. Stop for 1 Cap letter 01 ct

Book mark: ____

C J Moon

(358) Copyist

L | 3 | U.S.C.T.

George Lyons

Pvt, Co. I, 3 Reg't U. S. Col'd Infantry.

Appears on

Company Muster Roll

for Sept & Oct, 1864.

Present or absent Present

Stoppage, $ 100 for

Due Gov't, $ 100 for

Remarks: Paid $7.00 per month from enlistment to the 29th Feby 1864 Back pay due

Book mark:

D J Moore

(858) Copyist

L | 3 | U.S.C.T.

George Lynn

Pvt, Co. I, 3 Reg't U. S. Col'd Infantry.

Appears on

Company Muster Roll

for Nov. & Dec, 1864.

Present or absent Present

Stoppage, $ 100 for

Due Gov't, $ 100 for

Remarks:

Book mark:

C J Moore

(858) Copyist

L | 3 | U.S.C.T.

George Lyon

Pvt, Co. I, 3 Reg't U. S. Col'd Infantry.

Appears on

Company Muster Roll

for Jany & Feby, 1865.

Present or absent Present

Stoppage, $ 100 for

Due Gov't, $ 100 for

Remarks:

Book mark:

A J Moore

Copyist

(358)

NARA 772

L. | 3 | U.S.C.T.

George Lyon.

Pt., Co. I, 3 Reg't U. S. Col'd Infantry.

Appears on

Company Muster Roll

for Mar. & Apr., 1865.

Present or absent Present.

Stoppage, $.......100 for ....

Due Gov't, $.......100 for ....

Remarks: ....

Book mark: ....

N. F. White.
Copyist

(858)

L. | 3 | U.S.C.T.

George Lynn.

Pvt., Co. I, 3 Reg't U. S. Col'd Infantry.

Appears on

Company Muster Roll

for May & June, 1865.

Present or absent Present.

Stoppage, $ 100 for

Due Gov't, $ 100 for

Remarks:

NEXT ROLL ON FILE MUSTER OUT.

Book mark:

A. G. White

(858) Copyist

NARA 774

L.	3	U.S.C.T.

George Lynn

Pt., Co. I, 3 Reg't U. S. Col'd Infantry.

Appears on **Co. Muster-out Roll**, dated

Jacksonville, Fla, Oct. 31, 1865.

Muster-out to date Oct. 31, 1865.

Last paid to June 30, 1865.

Clothing account:

Last settled ...., 186 ; drawn since $ ...... $\frac{}{100}$

Due soldier $ 11 $\frac{10}{100}$; due U. S. $ ...... $\frac{}{100}$

Am't for cloth'g in kind or money adv'd $ ...... $\frac{}{100}$

Due U. S. for arms, equipments, &c., $ ...... $\frac{}{100}$

Bounty paid $ ...... $\frac{}{100}$; due $ 100 $\frac{}{100}$

Remarks: Joined as Private

Book mark: V. 92. P. 150. C9.

N. J. White
Copyist.

(361)

NARA 775

13[illegible] [redacted] 760-R

Lyons, Theodore

Co. D, 3 U.S. Col'd Inf.

Private | Private

CARD NUMBERS.

1	6251522	26	
2	6256949	27	
3	6257036	28	
4	9060891	29	
5		30	
6		31	
7		32	
8		33	
9		34	
10		35	
11		36	
12		37	
13		38	
14		39	
15		40	
16		41	
17		42	
18		43	
19		44	
20		45	
21		46	
22		47	
23		48	
24		49	
25		50	

Book Mark:

See also

L. | 3 | U.S.C.T.

Theodore Lyons.

, Co. D, 3 Reg't U. S. Col'd Inf.

Appears on

Company Descriptive Book

of the organization named above.

DESCRIPTION.

Age 35 years; height 5 feet 6 inches.

Complexion Black.

Eyes Black; hair Black

Where born —

Occupation Barber

ENLISTMENT.

When December 7th, 1864.

Where Buffalo, New York

By whom —; term 3 y'rs.

Remarks:

(383g) Copyist.

L | 9. **U.S.C.T.**

Theodore Lyons.

Appears with rank of Private on

Muster and Descriptive Roll of a Detachment of Drafted Men and Substitutes forwarded

for the 9 Reg't U. S. Col'd Inf. Roll dated Chestnut Hills, Pa.

Camp William Penn, May 8th, 1865.

Where born

Age 25 years; occupation

~~Drafted and~~ mustered in:

When Dec. 7th, 1864.

Where Buffalo, N.Y.

Period 3 years.

Eyes Blk; hair Blk.

Complexion Black; height 5 ft. 6 in.

Paid bounty and advance pay, $ 100

Bounty due $ 100

Where credited

Company to which assigned

Remarks: Substitute

Expense for arrest paid $16.

Book mark:

J. B. Crary

(340) Copyist

NARA 778

L | 3 | U.S.C.T.

Theodore Lyons

Sgt, Co. D, 3 Reg't U. S. Col'd Infantry.

Appears on

Company Muster Roll

for May & June, 1865.

Present or absent Present

Stoppage, $ ______ 100 for ______

Due Gov't, $ ______ 100 for ______

Remarks: Stop 10 40/100 expense of arrest.

NEXT ROLL ON FILE MUSTER OUT.

Book mark: ______

Kugler
Copyist

(358)

NARA 779

L	3	U.S.C.T.

Theodore Lyons

Pvt, Co. D, 3 Reg't U. S. Col'd Infantry.

Appears on **Co. Muster-out Roll,** dated

Jacksonville Fla, Oct 31, 1865.

Muster-out to date Oct 31, 1865.

Last paid to June 30, 1865.

Clothing account:

Last settled ...., 186 ; drawn since $ ...... $\frac{}{100}$

Due soldier $ 22 $\frac{40}{100}$; due U. S. $ ...... $\frac{}{100}$

Am't for cloth'g in kind or money adv'd $ ...... $\frac{}{100}$

Due U. S. for arms, equipments, &c., $ 6 $\frac{43}{100}$

Bounty paid $ ...... $\frac{}{100}$; due $ ...... $\frac{}{100}$

Remarks: Private from enlistment.
Stoppage for Camp & Garrison Equip. 62 cents

Book mark:

C. Kugler
Copyist.

(861)

Lyons, Theodore, Chas Pierce

, Co. , Reg't

Enclosures.

Bed Cards	Final Statements
Burial Records	Furloughs or L. of A
Certs. of Dis. for Discharge	Med. Certificates
C. M. Charges	Med. Des. Lists
Descriptive Lists 1	Orders
Discharge Certificates	Pris. of War Record
Enlistment Papers	Resignations

Other papers relating to—

Admission to Hosp'l	Furlough or L. of A
Casualty Sheet	Med. Examination
Confinement	Misc. Information
Contracts	Pay or Clothing
Death or Effects	Personal Reports
Desertion	Rank
Discharge from Hosp'l	Transfer to Hosp'l
Discharge from Service	Transfer to V. R. C.
Duty	Transportation

NARA 781

) FROM MILITARY PROVOST MARSHAL'S OFFICE,

PHILADELPHIA.

Philadelphia March 14th, 1865.

S.	HAIR.	ENLISTED.		DESERTED.		APPREHENDED.	
		WHEN.	WHERE.	WHEN.	WHERE.	WHEN.	WHERE.
ck	Black	Dec. 7, 64	Buffalo, N.Y. (3 yrs.)	Dec 1864	Elmira N.Y.	Jan 23/65	Wayne Co. Pa.

harges.

(Signed) Sam. Yohe
Capt. & Pro. Marshal
11th Dist. Pa.

I Certify that the above is Correct Copy:

Edward W. Terry
~~Capt.~~ Lieut Co. "H" 188th P.V. In Charge of Deserters.

NARA 782

Nr carded Theodore Lyons 43 U.S.C.T.
belongs to Co. 3

DESCRIPTIVE LIST OF DESERTERS FORWARDED FROM MILITARY PROVOST MARSHAL'S OFFICE,

DISTRICT OF PHILADELPHIA.

Filed Oct. 3, 1901.
J.H.V.

Philadelphia March 14th, 1865.

NO.	NAME.	RANK.	CO.	REG'T.	AGE.	HEIGHT. FT.	HEIGHT. IN.	COMPLEXION.	EYES.	HAIR.	ENLISTED. WHEN.	ENLISTED. WHERE.	DESERTED. WHEN.	DESERTED. WHERE.	APPREHENDED. WHEN.	APPREHENDED. WHERE.
1	Theodore Lyons alias Thos. Peirce	Pvt.		Substitute	25	5	6	Black	Black	Black	Dec. 7. 64	Buffalo, N.Y. (3 yrs.)	Dec 1864	Elmira N.Y.	Jan 23/65	Wayne Co. Pa.

Jan. 1899. This paper was formerly filed with the records of Camp ... for the organization of colored troops in the Enrolment Div. R. & P.O.

REMARKS. Expenses for arrest $16.00. Written charges.

(Signed) Sam. Yohe
Capt. & Pro. Marshal
11th Dist. Pa.

I Certify that the above is Correct. Copy.

Station- Easton Pa.

Date- March 14, 1865-

Edward W. Terry
Lieut ~~Capt.~~ Co. ... In Charge of Deserters.

Theodore Lyons
alias Thos. Pierce
Custer

Hd. Qrs. Camp Wm. Penn.
March 31. 1865.

Wagner Lewis
Lt. Col. 88th P.V. Commdg.

Acknowledges receipt
Of one Colored Deserter
Theodore Lyons alias Lince

cod 3. ~~43~~

REC'D PRO. MAR. OFFICE PHILA
MAR. 31
1865.
29

NARA 785

Head-Quarters Camp "William Penn"

CHELTEN HILLS, PA.

March 31st 1865

Received of Private John Thomas (in charge)

one man: Deserter.

Theodore Lyons, alias Pierce
with Charges, Specifications and
Descriptive List.

~~who were assigned to Regt. U. S. C. T.~~

Louis Wagner
Lt.-Col. 88th Pa. Vols.,
Comd'g Post.

100-a

Lyons, William

Co. —, 3 U.S. Col'd Inf.

—

CARD NUMBERS.

1 43136097	20
2	21
3	22
4	23
5	24
6	25
7	26
8	27
9	28
10	29
11	30
12	31
13	32
14	33
15	34
16	35
17	36
18	37
19	38

Number of medical cards herein 0

Number of personal papers herein 0

BOOK MARK:

See also Sub. for Robert Wilson

L | 3 | U.S.C.T.

William Lyons.

Appears with rank of _____ on

Muster and Descriptive Roll

of a detachment of U.S.C. Substitutes & drafted recruits forwarded for 3rd Regt U.S.C. Inf. Roll dated Springfield Ills, Nov 2, 1864.

Where born Ills

Age 18 years; occupation Laborer

When enlisted Sept 22, 1864.

Where enlisted Alton.

For what period enlisted one years.

Eyes blk; hair blk

Complexion blk; height 5 ft. 8 in.

When mustered in Sept 22, 1864.

Where mustered in Alton.

Bounty paid $ ____ 100; due $ ____ 100

Clothing account:

Last settled ____, 186 ; drawn since $32 $\frac{64}{100}$

Date of first muster ____, 186 .

Company to which assigned ____

Remarks: Substitute for Robert Wilson - Residence when enlisted 12 Dist. 22 Sub Dist Ill.

Book mark: ____

G. C. Nott

(356m) Copyist.

NARA 788

751

Maddox Dennis

Co —, 3 U.S. Col'd Inf.

—	—

CARD NUMBERS.

1	6252076	26	
2	6252098	27	
3		28	
4		29	
5		30	
6		31	
7		32	
8		33	
9		34	
10		35	
11		36	
12		37	
13		38	
14		39	
15		40	
16		41	
17		42	
18		43	
19		44	
20		45	
21		46	
22		47	
23		48	
24		49	
25		50	

Book Mark:

See also

M. | 3 Inf. | **U.S.C.T.**

Dennis Maddox

....., Co. 3 Reg't U. S. Col'd Infantry.

Appears on

Descriptive List of Deserters

dated November 17, 1865.

Deserted:

When After Draft, 186 .

Where .....

Arrested:

When Jany 18, 1865.

Where Charles Co. Md.

Remarks: Drafted and failed to report as ordered, was arrested and turned over to Col. John Woolley, Prov. Mar. 8th Army Corps Balto. Md. as a deserter, and the reward allowed for his apprehension and delivery $30 00/100

Book mark: .....

J. S. Stearns

(851) Copyist.

M. | 3 | U.S.C.T.

Dennis Madox

....., Co. 3 Reg't U. S. Col'd Infantry.

Appears on

Descriptive List of Deserters

dated November 23, 1865.

Deserted:

When After Draft, 186 .

Where .....

Arrested:

When Jan 18, 1865.

Where Charles Co Md

Remarks: Drafted and failed to report as ordered was arrested and turned over to Col Colin Woolley Pro Mar 8th Army Corps Balto Md. as a deserter and the reward allowed $30.00.

Drafted Sept 21/64 at (over)

Book mark: .....

J J Stearns

(351) Copyist.

JAN. 19
6252098
c1891

Ellicotts Mills Md for
1 year. -
21 years of age -
not taken up on muster
rolls of Regt=

752

Mapmaker, Enoch

Co 1, 3 U.S. Col'd Inf.

CARD NUMBERS.

1	62520 93	26	
2	62521 09	27	
3		28	
4		29	
5		30	
6		31	
7		32	
8		33	
9		34	
10		35	
11		36	
12		37	
13		38	
14		39	
15		40	
16		41	
17		42	
18		43	
19		44	
20		45	
21		46	
22		47	
23		48	
24		49	
25		50	

Book Mark:

See also

M. | 3 | U.S.C.T.

Enoch Magruder

....., Co. 3 Reg't U. S. Col'd Infantry.

Appears on

Descriptive List of Deserters

dated November 23, 1865.

Deserted:

When After Draft, 186 .

Where .....

Arrested:

When Feb. 3, 1865.

Where .....

Remarks: Drafted and failed to report as ordered was arrested and turned over to Lieut John Woolley Pro. Mar. 8th Army Corps Balto Md as a deserter and the reward allowed for his apprehension and delivery $30.00 (Over)

Book mark: .....

J. A. Stearns

(851) Copyist.

JAN. 19

6252093

☆1891☆

37 years of age.
Drafted July 9/64 at
Ellicotts Mills Md
for 3 yrs -

Not taken up on muster
rolls of Regt -

M. | 3. | **U.S.C.T.**

Enoch Magruder

....., Co. ....., 3 Reg't U. S. Col'd Infantry.

Appears on

Descriptive List of Deserters

dated December 20, 1865.

Deserted:

When After Draft, 186 .

Where .....

Arrested:

When Feb 3, 1865.

Where .....

Remarks: Failed to report as ordered was arrested and turned over to Col John Wooley Pro Mar 8 Army Corps Balto Md as a deserter and the reward allowed for his apprehension & delivery $30.00

Book mark: .....

J J Stearns

(851) Copyist.

753

Maley, Abner

Co. A, 3 U.S. Col'd Inf.

Private | Private.

CARD NUMBERS.

1	6261926	26	
2	6262009	27	
3	6262089	28	
4	6262169	29	
5	6262246	30	
6	6262322	31	
7	6262397	32	
8	6262471	33	
9	6262540	34	
10	6262616	35	
11	6262699	36	
12	6262781	37	
13	6262871	38	
14	6262957	39	
15	9061438	40	
16		41	
17		42	
18		43	
19		44	
20		45	
21		46	
22		47	
23		48	
24		49	
25		50	

Book Mark:

See also

S. 2421592 And. [illegible]
S - 3145802 - P. Dect

No. 3 U.S.C.T.

Abner Malery

, Co. I, 3 Reg't U. S. Col'd Inf.

Appears on

Company Descriptive Book

of the organization named above.

DESCRIPTION.

Age 38 years; height 5 feet 5 inches.

Complexion Lt Brown

Eyes Dark; hair Black

Where born Ross Co. Ohio

Occupation Farmer

ENLISTMENT.

When July 20, 1863.

Where Phila. Pa.

By whom Lt Col. Wagner, term 3 y'rs.

Remarks:

× as appears on Roll.

Daggett

(383g) Copyist.

NARA 799

M | 3 | U.S.C.T.

Abner Malery

Pri, Co. D, 3 Reg't U. S. Col'd Infantry.

Age 38 years.

Appears on

Company Muster-in Roll

of the organization named above. Roll dated

Philada Pa. July 26, 1863.

Muster-in to date July 20, 1863

Joined for duty and enrolled:

When July 20 1863.

Where Philadelphia Pa.

Period 3 years.

Remarks: Mustered by Capt. Sergeant U.S.A. July 20, 1863.

Book mark:

C E McLaughlin
Copyist.

(856)

W | 3 | U.S.C.T.

Abner Malery

Priv., Co. I, 3 Reg't U. S. Col'd Infantry.

Appears on

Company Muster Roll

for July 26 to Aug. 31, 1863.

Present or absent Present

Stoppage, $ 100 for

Due Gov't, $ 100 for

Remarks: Stoppages 1 Canteen 44 cts.

Book mark:

C. E. McLaughlin

Copyist

(253)

NV | 3 | U.S.C.T.

Abner Mallery

Priv., Co. I, 3 Reg't U. S. Col'd Infantry.

Appears on

Company Muster Roll

for Sep. & Oct., 1863.

Present or absent Present

Stoppage, $ 100 for

Due Gov't, $ 100 for

Remarks: Stop 1 Canteen 1 Cartridge box belt plate

Book mark:

C E McLaughlin

(858) Copyist

M | 3 | U.S.C.T.

Abner Mallery

Priv., Co. I, 3 Reg't U. S. Col'd Infantry.

Appears on

Company Muster Roll

for Nov. & Dec., 1863

Present or absent Present

Stoppage, $ 100 for

Due Gov't, $ 100 for

Remarks: Stop for 1 Canteen 1 Cartridge box belt-plate.

Book mark:

C. E. McLaughlin

(858) Copyist

M | 3 | U.S.C.T.

Abner Mallery

Priv., Co. I, 3 Reg't U. S. Col'd Infantry.

Appears on

Company Muster Roll

for Jan. & Feb., 1864.

Present or absent Present

Stoppage, $ 100 for

Due Gov't, $ 100 for

Remarks:

Book mark:

C. E. McLaughlin

(858) Copyist

No. 3 U.S.C.T.

Abner Mallory

Pvt., Co. I, 3 Reg't U. S. Col'd Infantry.

Appears on

Company Muster Roll

for Mar & Apl, 1864.

Present or absent Present

Stoppage, $ 100 for

Due Gov't, $ 100 for

Remarks:

Book mark:

D. Brown

(858) Copyist

M 3 U.S.C.T.

Abner Mallery

Pvt., Co. I, 3 Reg't U. S. Col'd Infantry.

Appears on

Company Muster Roll

for May & June, 1864.

Present or absent Present

Stoppage, $ 100 for

Due Gov't, $ 100 for

Remarks:

Book mark:

(258) Copyist

NARA 806

M | 3 | U.S.C.T.

Abner Kalbery

Vol, Co. I, 3 Reg't U. S. Col'd Infantry.

Appears on

Company Muster Roll

for July & Aug, 1864.

Present or absent Present

Stoppage, $ ____ 100 for ____

Due Gov't, $ ____ 100 for ____

Remarks: Free on or before Apl. 19. 1861

Book mark: ____

C J Moore
Copyist

(358)

NARA 807

M	3	U.S.C.T.

Abner Mallory

Pvt, Co. I, 3 Reg't U. S. Col'd Infantry.

Appears on

Company Muster Roll

for Sept & Oct, 1864.

Present or absent Present

Stoppage, $ 100 for

Due Gov't, $ 100 for

Remarks: Paid $7.00 per month from enlistment to the 30" Apl. '64 Back pay due

Book mark:

P J Moore

(358) *Copyist*

NARA 808

M | 3 | U.S.C.T.

Abner Mallery

Pt, Co. I, 3 Reg't U. S. Col'd Infantry.

Appears on

Company Muster Roll

for Nov. & Dec., 1864.

Present or absent Present

Stoppage, $ ——— 100 for

Due Gov't, $ ——— 100 for

Remarks:

Book mark:

O. S. Moore

(858) Copyist

No. 3 U.S.C.T.

Abner Mallery

Pd., Co. I, 3 Reg't U. S. Col'd Infantry.

Appears on

Company Muster Roll

for Jany & Feby, 1865.

Present or absent Present

Stoppage, $ 100 for

Due Gov't, $ 100 for

Remarks:

Book mark:

(358) Copyist

M. | 3 | U.S.C.T.

Abner Mallery

Pvt., Co. I, 3 Reg't U. S. Col'd Infantry.

Appears on

Company Muster Roll

for Mar. & Apr., 1865.

Present or absent Present.

Stoppage, $ 100 for

Due Gov't, $ 100 for

Remarks:

Book mark:

W. F. White.

Copyist

(358)

M. | 3 | U.S.C.T.

Abner Mallery

Pt., Co. I, 3 Reg't U. S. Col'd Infantry.

Appears on

Company Muster Roll

for May & June, 1865.

Present or absent Present.

Stoppage, $ 100 for

Due Gov't, $ 100 for

Remarks:

NEXT ROLL ON FILE MUSTER OUT

Book mark:

A. G. White

(858) *Copyist*

M. | 3 | U.S.C.T.

Abner Mallery

Pvt., Co. I, 3 Reg't U. S. Col'd Infantry.

Appears on **Co. Muster-out Roll,** dated Jacksonville, Fla. Oct. 31, 1865.

Muster-out to date Oct. 31, 1865.

Last paid to June 30, 1865.

Clothing account:

Last settled....., 186 ; drawn since $.....100

Due soldier $ 38 87/100; due U. S. $.....100

Am't for cloth'g in kind or money adv'd $.....100

Due U. S. for arms, equipments, &c., $.....100

Bounty paid $.....100; due $ 100 100

Remarks: Joined as Private

Book mark:

J. F. White

(361) *Copyist.*

NARA 813

154

Morgan, Henry A

Co. F, 3 U.S. Col'd Inf.

Private Private

CARD NUMBERS.

1	6258450	26	
2	6258526	27	
3	6258573	28	
4	6258650	29	
5	6258729	30	
6	6258841	31	
7	6258919	32	
8	6258993	33	
9	6259065	34	
10	6259139	35	
11	6259215	36	
12	6259299	37	
13	6259391	38	
14	6252054	39	
15	6259506	40	
16	9061120	41	
17		42	
18		43	
19		44	
20		45	
21		46	
22		47	
23		48	
24		49	
25		50	

Book Mark:

See also

No. 3 **U.S.C.T.**

Henry A. Mangen

....., Co. F, 3 Reg't U. S. Col'd Inf.

Appears on

Company Descriptive Book

of the organization named above.

DESCRIPTION.

Age 29 years; height 5 feet 3¼ inches.

Complexion Light Yellow.

Eyes Dark brown; hair Black

Where born Chester, Orange Co. N.Y.

Occupation Barber

ENLISTMENT.

When July 10, 1863.

Where Philad.a Penn.a

By whom Capt. Wagner; term 3 y'rs.

Remarks: Better "F" in India ink on left fore-arm. Small scar on second joint of left fore-finger. Small scar on outside of left knee.

Mustered in by Capt. Sergeant U.S.A. July 10. 1863.

R. Springsmith

(383g) Copyist.

M | 3 | U.S.C.T.

Henry A. Mangen

Priv., Co. F, 3 Reg't U. S. Col'd Infantry.

Age 29 years.

Appears on

Company Muster-in Roll

of the organization named above. Roll dated Philada, Pa., Aug 10, 1863.

Muster-in to date July 10, 1863

Joined for duty and enrolled:

When July 10, 1863.

Where Philadelphia, Pa.

Period 3 years.

Remarks:

Book mark:

WBeck

(856) Copyist.

M | 3 | U.S.C.T.

Henry A. Mangen

Priv., Co. F, 3 Reg't U. S. Col'd Infantry.

Appears on

Company Muster Roll

for Aug 10 to 31, 1863.

Present or absent Present

Stoppage, $ ..... 100 for .....

Due Gov't, $ ..... 100 for .....

Remarks: .....

Book mark: .....

Beck

Copyist

(358)

M | 3 | U.S.C.T.

Henry A. Mangen

Corpl., Co. F, 3 Reg't U. S. Col'd Infantry.

Appears on

Company Muster Roll

for Sept. & Oct., 1863.

Present or absent Present

Stoppage, $ 100 for

Due Gov't, $ 100 for

Remarks:

Stop for one Haversack & one canteen.

Book mark:

Beck

(858) Copyist

M | 3 | U.S.C.T.

Henry A. Mangen

Corpl., Co. F, 3 Reg't U. S. Col'd Infantry.

Appears on

Company Muster Roll

for Nov & Dec, 1863.

Present or absent Present

Stoppage, $ 100 for

Due Gov't, $ 100 for

Remarks:

Book mark:

Beck

(358) Copyist

m | 3 | U.S.C.T.

Henry A. Mangen

Corp., Co. F, 3 Reg't U. S. Col'd Infantry.

Appears on

Company Muster Roll

for Jan & Feb, 1864.

Present or absent Present

Stoppage, $ 100 for

Due Gov't, $ 100 for

Remarks:

Book mark:

Beck

(358) Copyist

M | 3 | U.S.C.T.

Henry A. Mangen

Pvt, Co. F, 3 Reg't U. S. Col'd Infantry.

Appears on

Company Muster Roll

for Mar & Apr, 1864.

Present or absent Absent

Stoppage, $ 100 for

Due Gov't, $ 100 for

Remarks: Reduced.
Sick in Hospital
* ~~Jacksonville Fla~~
Beaufort, S.C.

* as it appears on Roll

Book mark:

JBeck

(858) Copyist

M | 3 | U.S.C.T.

Henry Mangen

Pvt. Co. F, 3 Reg't U. S. Col'd Infantry.

Appears on

Company Muster Roll

for May & June, 1864.

Present or absent Present

Stoppage, $ 100 for

Due Gov't, $ 100 for

Remarks:

Book mark:

(358) Copyist

NARA 622

M | 3 | U.S.C.T.

Henry Mangen

Pvt., Co. F, 3 Reg't U. S. Col'd Infantry.

Appears on

Company Muster Roll

for July & August, 1864.

Present or absent Absent

Stoppage, $ .... 100 for ....

....

Due Gov't, $ .... 100 for ....

....

Remarks: Free on or before 19 Apl 1861 stop one Haversack

Book mark: ....

(358) C. B. Sayer
Copyist

NARA 823

M | 3 | U.S.C.T.

Henry Mangen

Pvt., Co. F, 3 Reg't U. S. Col'd Infantry.

Appears on

Company Muster Roll

for Sept & Oct, 1864.

Present or absent Present

Stoppage, $ 48/100 for Ordnance

Due Gov't, $ /100 for

Remarks: Free - Paid but 7.00 per mo from enlistment to Apl 30 1864 Back Pay due

Book mark:

C. B. Sayer
Copyist

(358)

NARA 824

M | 3 | U.S.C.T.

Henry Mangen

Pvt, Co. F, 3 Reg't U. S. Col'd Infantry.

Appears on

Company Muster Roll

for Nov & Dec, 1864.

Present or absent Present

Stoppage, $ $\frac{43}{100}$ for ordnance

Due Gov't, $ $\frac{}{100}$ for

Remarks: + ~~Free~~ - Paid bal $7.00 per month from Enlistment to April 30 '64 back pay due + Free man before April 19 - 1861

Book mark:

C B Sayer
Copyist

(358)

NARA 825

M | 3 | U.S.C.T.

Henry D Mangen

Ay, Co. F, 3 Reg't U. S. Col'd Infantry.

Appears on

Company Muster Roll

for Jany & Feby, 1865.

Present or absent Present

Stoppage, $ 43/100 for ordnance

Due Gov't, $ /100 for

Remarks: Free on or before Apl 19 1864 Paid but $7.00 per month from Enlistment to Apl 30 64 back pay due

Book mark:

C B Seger
Copyist

(858)

No. 3 U.S.C.T.

Henry A. Manzer

Pvt, Co. F, 3 Reg't U. S. Col'd Infantry.

Appears on

Company Muster Roll

for March & April, 1865.

Present or absent Present

Stoppage, $ 0 43/100 for Ord

Due Gov't, $ 100 for

Remarks: Free on or before Apr 19
Paid Bal $7.00 per Month
from Enlistment to April 30 '64
Back Pay Due.

Book mark:

S. W. Tucker

(358) Copyist

No. 3 U.S.C.T.

Henry A. Manzen

Pvt., Co. F, 3 Reg't U. S. Col'd Infantry.

Appears on

Company Muster Roll

for May & June, 1865.

Present or absent Present

Stoppage, $ 0 43/100 for Ord.

Due Gov't, $ 100 for

Remarks: Free on or before Apr 19 '61
Paid bounty $7.00 per month
from Enlistment to April 30 '64
Back Pay due

NEXT ROLL ON FILE MUSTER OUT

Book mark:

S. W. Tucker

(858) Copyist

M | 3 | U.S.C.T.

Henry A. Mangen

Private, Co. F, 3 Reg't U. S. Col'd Infantry.

Appears on a

Detachment Muster-out Roll

of the organization named above. Roll dated Jacksonville, Fla., Oct. 31, 1865.

Muster-out to date Oct. 31, 1865.

Last paid to June 30, 1865

Clothing account:

Last settled ....., 186 ; drawn since $..... 100

Due soldier $..... 100; due U. S. $..... 100

Am't for cloth'g in kind or money adv'd $ 5 90/100

Due U. S. for arms, equipments, &c., $ 6 100

Bounty paid $..... 100 due $ 100 100

Remarks: Private since Enlistment. Mustered out in obedience to Circular No. 44 War Dept. a.G.O. 1865 and G.O. No. 10 Mil Div. of the Gulf – his services being no longer required.

Book mark:

O. J. Markle,

(349) Copyist.

M | 3 | U.S.C.T.

Henry A Mangero

Pvt, Co. B, 3 Reg't U. S. Col'd Infantry.

Appears on **Co. Muster-out Roll,** dated

Jacksonville Fla Oct 31, 1865.

Muster-out to date ...., 186 .

Last paid to June 30, 1865.

Clothing account:

Last settled.........., 186 ; drawn since $...... 100

Due soldier $ .... 100; due U. S. $ 9 57/100

Am't for cloth'g in kind or money adv'd $...... 100

Due U. S. for arms, equipments, &c., $ 6 00/100

Bounty paid $.......... 100; due $ 100 100

Remarks: Stop $8.9c for C & G. E

Enrolled as Private

Discharged - To remain in

the State Under G. O No. 10. -

Mil Div of the Gulf.

Not Paid on this roll,

Book mark: ....

---

(861) G. W. Tucker

Copyist.

Manly J. Alexander

Co A, 3 U.S. Col'd Inf.

Private | Private

CARD NUMBERS.

1	6261929	26	
2	6262012	27	
3	6262092	28	
4	6262172	29	
5	6262249	30	
6	6262325	31	
7	6262400	32	
8	6262476	33	
9	6262542	34	
10	6262619	35	
11	6262702	36	
12	6262788	37	
13	6262878	38	
14	6262963	39	
15	9061439	40	
16		41	
17		42	
18		43	
19		44	
20		45	
21		46	
22		47	
23		48	
24		49	
25		50	

Book Mark:

See also

NARA 831

S-827388-O.D. aff

S1056631 P.O. M & M

S1793025-Aud W.D.

O. 2197950 P.O. Rect. R

NARA 832

M. | 3 | U.S.C.T.

Alexander Manly

, Co. F., 3 Reg't U. S. Col'd Inf.

Appears on

Company Descriptive Book

of the organization named above.

DESCRIPTION.

Age 18 years; height 5 feet 5 inches.

Complexion Lt Brown

Eyes Dark; hair Black

Where born Philadelphia Pa.

Occupation Farmer

ENLISTMENT.

When July 21, 1863.

Where Phila. Pa.

By whom Lt Col Wagner, term 3 y'rs.

Remarks:

Dayett

(383o) Copyist.

M | 3 | U.S.C.T.

Alexander Manly

Priv., Co. A, 3 Reg't U. S. Col'd Infantry.

Age 18 years.

Appears on

Company Muster-in Roll

of the organization named above. Roll dated Philada Pa. July 26, 1863.

Muster-in to date July 21, 1863

Joined for duty and enrolled:

When July 21, 1863.

Where Philadelphia Pa.

Period 3 years.

Remarks: Mustered by Capt. Sergeant, U. S. A. July 21, 1863.

Book mark:

C. E. McLaughlin

(856) Copyist.

N | 3 | U.S.C.T.

Alexander Manly

Pvt., Co. I, 3 Reg't U. S. Col'd Infantry.

Appears on

Company Muster Roll

for July 2 to Aug. 31, 1863.

Present or absent Present

Stoppage, $ 100 for

Due Gov't, $ 100 for

Remarks:

Book mark:

C. E. McLaughlin

(358) Copyist

M | 3 | U.S.C.T.

Alexander Manly

Priv., Co. I, 3 Reg't U. S. Col'd Infantry.

Appears on

Company Muster Roll

for Sep. & Oct., 1863.

Present or absent Present

Stoppage, $ 100 for

Due Gov't, $ 100 for

Remarks: Stop 1 Canteen 1 Bugle 1 Letter.

Book mark:

C. E. McLaughlin

Copyist

(858)

M | 3 | U.S.C.T.

Alexander Manley

Priv., Co. I, 3 Reg't U. S. Col'd Infantry.

Appears on

Company Muster Roll

for Nov. & Dec., 1863.

Present or absent Present

Stoppage, $ 100 for

Due Gov't, $ 100 for

Remarks: Stop for 1 Canteen 1 Bugle 1 Letter.

Book mark:

C. E. McLaughlin

(858) Copyist

M | 3 | U.S.C.T.

Alexander Manley

Priv., Co. I, 3 Reg't U. S. Col'd Infantry.

Appears on

Company Muster Roll

for Jan. & Feb., 1864.

Present or absent Present

Stoppage, $ 100 for

Due Gov't, $ 100 for

Remarks:

Book mark:

C. E. McLaughlin

(858) Copyist

No. 3 U.S.C.T.

Alexander Manley

Pt., Co. I, 3 Reg't U. S. Col'd Infantry.

Appears on

Company Muster Roll

for Mar & Apl, 1864.

Present or absent Present

Stoppage, $ 100 for

Due Gov't, $ 100 for

Remarks:

Book mark:

(858) Copyist

Md 3 U.S.C.T.

Alexander Manly

Pvt, Co. I, 3 Reg't U. S. Col'd Infantry.

Appears on

Company Muster Roll

for May & June, 1864.

Present or absent Present

Stoppage, $ 100 for

Due Gov't, $ 100 for

Remarks:

Book mark:

(858) Copyist

NARA 840

M | 3 | U.S.C.T.

Alexander Manley

Pvt, Co. I, 3 Reg't U. S. Col'd Infantry.

Appears on

Company Muster Roll

for July & Aug, 1864

Present or absent Present

Stoppage, $ 100 for

Due Gov't, $ 100 for

Remarks: Free on or before Apl. 19. 1861

Book mark:

D J Moore
Copyist

(858)

NARA 841

M | 3 | U.S.C.T.

Alexander Manley

Pvt., Co. I, 3 Reg't U. S. Col'd Infantry.

Appears on

Company Muster Roll

for Sept & Oct, 1864.

Present or absent Present

Stoppage, $ .... 100 for ....

Due Gov't, $ .... 100 for ....

Remarks: Paid $7.00 per month from enlistment to the 29" Feby 1864 Back pay due

Book mark:

D J Brown
Copyist

(358)

No. 3 U.S.C.T.

Alexander Manly

Pvt., Co. I, 3 Reg't U. S. Col'd Infantry.

Appears on

Company Muster Roll

for Nov. & Dec., 1864.

Present or absent Present

Stoppage, $ 100 for

Due Gov't, $ 100 for

Remarks:

Book mark:

A. Moore

(858) Copyist

Md 3 U.S.C.T.

Alexander Manly

Sgt, Co. I, 3 Reg't U. S. Col'd Infantry.

Appears on

Company Muster Roll

for Aug & Feby, 1865.

Present or absent Present

Stoppage, $ 100 for

Due Gov't, $ 100 for

Remarks:

Book mark:

(858) Copyist

M. | 3 | U.S.C.T.

Alexander Manly

Pvt., Co. I, 3 Reg't U. S. Col'd Infantry.

Appears on

Company Muster Roll

for Mar. & Apr., 1865.

Present or absent Present.

Stoppage, $ 100 for

Due Gov't, $ 100 for

Remarks: Stop for 1. Mosquito Bar, 1. Cartridge Box Plate, 1. Cap Letter.

Book mark:

R. G. White.

(858) Copyist

NARA 845

M. | 3 | U.S.C.T.

Alexander Manly

Pvt., Co. I, 3 Reg't U. S. Col'd Infantry.

Appears on

Company Muster Roll

for May & June, 1865.

Present or absent Present.

Stoppage, $ .... 100 for ....

Due Gov't, $ .... 100 for ....

Remarks: Stop for 1. Musquito Bar, 1. Cartridge Box Plate, 1. Cap Letter.

NEXT ROLL ON FILE MUSTER OUT.

Book mark: ....

N. J. White
Copyist

(858)

M. | 3 | U.S.C.T.

Alexander Manly

Pvt., Co. D, 3 Reg't U. S. Col'd Infantry.

Appears on **Co. Muster-out Roll,** dated Jacksonville, Fla, Oct. 31, 1865.

Muster-out to date Oct. 31, 1865.

Last paid to June 30, 1865.

Clothing account:

Last settled....., 186 ; drawn since $.....100

Due soldier $ 24 51/100; due U. S. $.....100

Am't for cloth'g in kind or money adv'd $.....100

Due U. S. for arms, equipments, &c., $.....100

Bounty paid $.....100; due $ 100 100

Remarks: Joined as Private.

Book mark:

W. G. White.

(361) *Copyist.*

150

Manley, George

Co. E, 3 U.S. Col'd Inf.

Private | Private

CARD NUMBERS.

1	6251805	26	
2	6260573	27	
3	6260654	28	
4	9061226	29	
5		30	
6		31	
7		32	
8		33	
9		34	
10		35	
11		36	
12		37	
13		38	
14		39	
15		40	
16		41	
17		42	
18		43	
19		44	
20		45	
21		46	
22		47	
23		48	
24		49	
25		50	

Book Mark:

See also

as-1799825

M. | 3 | U.S.C.T.

George Manly

, Co. G., 3 Reg't U. S. Col'd Inf.

Appears on

Company Descriptive Book

of the organization named above.

DESCRIPTION.

Age 30 years; height 5 feet 7 inches.

Complexion Brown

Eyes Black; hair Black

Where born Virginia

Occupation Laborer

ENLISTMENT.

When Dec. 19, 1864.

Where Hollidaysburg Pa.

By whom Capt. Loyd; term 1 y'rs.

Remarks: Substitute

Daggett

(3534) Copyist.

M | 3 | U.S.C.T.

George Manley

Appears with rank of Pvt on

Muster and Descriptive Roll of a Detachment of Substitutes forwarded

for the 3 Reg't U. S. Col'd Inf. Roll dated
Chelten Hill Pa
Camp Wm. Penn, Feb 10, 1865.

Where born Va

Age 30 y'rs; occupation Laborer

When enlisted Dec 19, 1864.

Where enlisted Hollidaysburg

For what period enlisted one years.

Eyes Blk; hair Blk

Complexion Brown; height 5 ft. 7 in.

When mustered in Dec 19, 1864.

Where mustered in Hollidaysburg

Bounty paid $ 100; due $ 100

Where credited

Company to which assigned

Remarks: Sub for M. Bolerett. Millville

Book mark:

Sauers
Copyist

(339)

M | 3 | U.S.C.T.

George Maney

Pvt., Co. G, 3 Reg't U. S. Col'd Infantry.

Appears on

Company Muster Roll

for May and June, 1865.

Present or absent Present

Stoppage, $ 100 for

Due Gov't, $ 100 for

Remarks:

NEXT ROLL ON FILE MUSTER OUT.

Book mark:

Leary

(858) Copyist

NARA 852

M. | 3 | U.S.C.T.

George Manly

Pri., Co. G., 3 Reg't U. S. Col'd Infantry.

Appears on **Co. Muster-out Roll**, dated

Jacksonville Fla., Oct. 31, 1865.

Muster-out to date Oct. 31, 1865.

Last paid to June 30, 1865.

Clothing account:

Last settled ...., 186 ; drawn since $......$\frac{}{100}$

Due soldier $.........$\frac{}{100}$; due U. S. $ 21 $\frac{66}{100}$

Am't for cloth'g in kind or money adv'd $......$\frac{}{100}$

Due U. S. for arms, equipments, &c., $.........$\frac{}{100}$

Bounty paid $.........$\frac{}{100}$; due $.........$\frac{}{100}$

Remarks: Stop for Ordnance $6.01.

Private from enlistment.

Book mark: ....

J. J. Stearns
Copyist.

(361)

Marseilles, Samuel S.

Co. A, 3 U.S. Col'd Inf.

Field Staff

1st Lieutenant, Captain

CARD NUMBERS.

1	62528 07	26	42971086
2	62521 17	27	42971107
3	62521 22	28	42971151
4	62521 32	29	m-37-07-1863
5	62521 41	30	
6	62521 55	31	
7	62521 70	32	
8	62521 84	33	
9	62521 97	34	
10	62522 10	35	
11	62522 24	36	
12	62522 36	37	
13	62522 48	38	
14	62522 59	39	
15	62519 26	40	
16	62513 92	41	
17	62522 76	42	
18	62535 19	43	
19	62523 01	44	
20	62529 07	45	
21	94284 52	46	
22	40756 976	47	
23	42971 259	48	
24	42971 265	49	
25	42971 284	50	

Book Mark: L 228. Vol 3. R.C.R.

m-37-07-1863

See also

S. 1095088. P.O.M. [illegible]

S. 1502034 S. of V.

S 2666074 and W D

A. G. 1500182

NARA 855

M | 3 | U.S.C.T.

Saml. S. Marseilles

Adjt. Co. , 3 Reg't U. S. Col'd Inf.

Appears on

Regimental Descriptive Book

(List of Commissioned Officers)

of the regiment named above.

Rank Adjt.

Date of appointment ~~June 30~~ 1863.

Remarks ~~x Appntd. 1st. Lt., June 30, 1863.~~
~~†Must^d in as adjt., July 6, 1863.~~
Reported for duty July 6, 1863.
Apptd. 1st. Lt. & adjt., July 28, '63.
Must^d. Aug. 1, 1863.
Apptd. capt., June 5 '65. Mu^d. o^t. at Tallahassee, June 27, '65.

† As it appears.

Sabine
Copyist.

(384)

M | 3 | U.S.C.T.

+ ~~Samuel S. Marseilles~~

1st Lieut, Co. A, 3 Reg't U. S. Col'd Infantry.

Age × ~~33~~ years.

Appears on

Company Muster-in Roll

of the organization named above. Roll dated Phila. Pa, Aug. 3, 1863.

Muster-in to date July 18, 1863.

Joined for duty and enrolled:

When ....., 186 .*

Where ..... *

Period ..... years.*

Remarks: Mustered in by Capt. Sergeant U.S.A July 18, 1863 and mustered out by Capt. Sergeant U.S.A Aug. 1, 63.

× as it appears on roll.

*☞ Muster-in roll shows enrollment of all men of this company as of same date and place. See enrollment on subsequent card or cards.

Book mark: M-37-CJ-1863

I A Boyd

(356c) Copyist.

M. | 3rd Regt. | U.S.C.T.

Samuel S. Marseilles.

Rank 1st Lt Adj., 3 Reg't U. S. Col'd Infantry.

Age 33 years.

Appears on

Field and Staff Muster-in Roll

of the organization named above. Roll dated Philadelphia Pa., Aug 12, 1863.

Muster-in to date Aug 1, 1863.

Joined for duty and enrolled:

When July 28th, 1863.

Where Washington D. C.

Period 3 years.

Valuation of horse, $ 100

Valuation of horse equipments, $ 100

Remarks: Appointment of the Secty of war dated July 28-1863 and accepted July 30th 1863.

Book mark:

F. C. Dickerson.

(354) Copyist.

M. | 3d Regt. | U.S.C.T.

Samuel S Marseilles.

Rank Adjt, 3 Reg't U. S. Col'd Infantry.

Appears on

Field and Staff Muster Roll

for Aug. 31, 1863.

Present or absent Present.

Stoppage, $.....100 for.....

.....

Due Gov't, $.....100 for.....

.....

Valuation of horse, $.....100

Valuation of horse equipments, $.....100

Remarks:.....

.....

.....

.....

.....

.....

.....

.....

.....

.....

Book mark:.....

F. C. Dickerson.

(357) Copyist

M. | 3d Regt | U.S.C.T.

Samuel S. Marseilles.

Rank Adj't, 3 Reg't U. S. Col'd Infantry.

Appears on

Field and Staff Muster Roll

for Sept & Oct, 1863.

Present or absent Present.

Stoppage, $.....100 for.....

Due Gov't, $.....100 for.....

Valuation of horse, $.....100

Valuation of horse equipments, $.....100

Remarks:.....

Book mark:.....

F. C. Dickerson,

(357)

Copyist

M. | 3d Regt | U.S.C.T.

Samuel S Marseilles,

Rank Adjt, 3 Reg't U. S. Col'd Infantry.

Appears on

Field and Staff Muster Roll

for Nov. & Dec., 1863.

Present or absent Present

Stoppage, $ 100 for

Due Gov't, $ 100 for

Valuation of horse, $ 100

Valuation of horse equipments, $ 100

Remarks:

Book mark:

F. C. Dickerson,

(857) Copyist

M. | 3d. Regt | U.S.C.T.

Samuel S. Morseilles

Rank 1st Lt & Adjt, 3 Reg't U. S. Col'd Infantry.

Appears on

Field and Staff Muster Roll

for Jan. & Feb., 1864.

Present or absent Present.

Stoppage, $ ____ 100 for ____

Due Gov't, $ ____ 100 for ____

Valuation of horse, $ ____ 100

Valuation of horse equipments, $ ____ 100

Remarks: Detached - a - a - a - Gen on Staff of Col Connely 2d B. Foster Div.

Book mark: ____

F. C. Dickerson.

Copyist

(357)

M | 3 | U.S.C.T.

Samel. S. Marseilles
1st Lieut. 3 U.S.C.T.

Return

of the 2d Brigade, Foster's Division, 10th A. C.
(Dist. of Florida, Dept. of the South),

for the month of Feb., 1864,
dated Jacksonville Fla
March, 1864,

shows the following with regard to the officer named above:

Post or station Jacksonville Fla

Remarks: A.A.A. Genl. as per Gen. Order No. 9. Hd Qrs. 2d Brigade March 1. 1864

Book mark:

A C Black
Copyist.

(546)

M | 3 | USCT

Saml. S. Marseilles
1st Lieut 3. USCT

Return

of the 2d Brigade, 2d Provisional Division
(Dist. of Florida), Dept. of the South,

for the month of March, 1864
dated Jacksonville Florida
April 5th, 1864,

shows the following with regard to the officer named above:

Post or station Jacksonville Florida

Remarks: A.A.A. Genl. G.O. No. 9, Head Qrs. 2. Brigade March 1st. 1864

Book mark:

A C Black

(546)

Copyist.

NARA 864

M. | 3d Regt. | U.S.C.T.

Samuel S. Marseilles

Rank 1st Lt & Adj't 3 Reg't U. S. Col'd Infantry.

Appears on

Field and Staff Muster Roll

for March & April, 1864.

Present or absent Present.

Stoppage, $ 100 for

Due Gov't, $ 100 for

Valuation of horse, $ 100

Valuation of horse equipments, $ 100

Remarks: Detached as a-a-a-G. to the Artillery Brigade.

Book mark:

F. C. Dickerson.

(357) Copyist

M | 3 U.S.C.T.

Saml. S. Marseilles
1st Lieut. & adjt. 3rd U.S.C.T.

Return

of the Artillery Brigade, District of Florida,
Department of the South,

for the month of April, 1864,
dated Jacksonville Fla
May 1, 1864,

shows the following with regard to the officer named above:

Post or station Jacksonville Fla

Remarks: actg asst. adjt. Genl
Genl Orders No 5. Par. II 10th
Corps. Actg Defences April
24 1864

Book mark:

A C Black

(546) Copyist.

M. | 3d Regt | U.S.C.T.

Samuel S. Marsellus

Rank 1st Lt Adjt 3 Reg't U. S. Col'd Infantry.

Appears on

Field and Staff Muster Roll

for May & June, 1864.

Present or absent Present.

Stoppage, $.....100 for.....

.....

Due Gov't, $.....100 for.....

.....

Valuation of horse, $.....100

Valuation of horse equipments, $.....100

Remarks:.....

.....

.....

.....

.....

.....

.....

.....

Book mark:.....

F. C. Dickerson,

(357) Copyist

Me | 3d Regt. | U.S.C.T.

Saml S Marseilles.

Rank 1st Adjt 3 Reg't U. S. Col'd Infantry.

Appears on

Field and Staff Muster Roll

for July & Aug, 1864.

Present or absent Present

Stoppage, $ 100 for

Due Gov't, $ 100 for

Valuation of horse, $ 100

Valuation of horse equipments, $ 100

Remarks:

Book mark:

F. C. Dickerson

(357) Copyist.

M. | 3d. Regt | U.S.C.T.

Samuel S. Marseilles

Rank 1st Lt. and Adj., 3 Reg't U. S. Col'd Infantry.

Appears on

Field and Staff Muster Roll

for Sept. & Oct., 1864.

Present or absent Present.

Stoppage, $ 100 for

Due Gov't, $ 100 for

Valuation of horse, $ 100

Valuation of horse equipments, $ 100

Remarks:

Book mark:

F. C. Dickerson,

(357) Copyist.

M. | 3d. Regt. | U.S.C.T.

Samuel S. Marseilles

Rank 1st Lieut Adjt., 3 Reg't U. S. Col'd Infantry.

Appears on

Field and Staff Muster Roll

for Nov & Dec, 1864.

Present or absent Present.

Stoppage, $ 100 for

Due Gov't, $ 100 for

Valuation of horse, $ 100

Valuation of horse equipments, $ 100

Remarks:

Book mark:

F. C. Dickerson

(857) Copyist

M. | 3d Regt | U.S.C.T.

Samuel S. Marsilles,

Rank 1st Lt Adj 3 Reg't U. S. Col'd Infantry.

Appears on

Field and Staff Muster Roll

for Jan & Feb, 1865.

Present or absent Present.

Stoppage, $ 100 for

Due Gov't, $ 100 for

Valuation of horse, $ 100

Valuation of horse equipments, $ 100

Remarks:

Book mark:

F. C. Dickerson,

Corpl

(357)

NARA 871

M | 3 | U.S.C.T.

S. S. Marseilles

1st Lt. and Adjt 3 Regt U.S.C.T.

Return

of the District of Florida, Dept. of the South,

for the month of March, 1865,

dated Jacksonville Fla

April 1st, 1865,

shows the following with regard to the officer named above:

Post or station Jacksonville Fla

Remarks: Post Adjutant Since March 14. 1865. per G.O. 1. Post H.Q. 1865

Book mark:

Curtis Clark
Copyist.

(546)

M. 3d Regt U.S.C.T.

Samuel S Marseilles

Rank 1st Lieut Adjt, 3 Reg't U. S. Col'd Infantry.

Appears on

Field and Staff Muster Roll

for March & April, 1865.

Present or absent Present.

Stoppage, $ 100 for

Due Gov't, $ 100 for

Valuation of horse, $ 100

Valuation of horse equipments, $ 100

Remarks:

Book mark:

F. C. Dickerson

(357) Copyist

M 1 3 | W.S.b.J.

Samuel S. Marseilles
1st Lieut & adjt. 3 Regt U.S.C.T.

Return

of the District of Florida, Dept. of the South,

for the month of April, 1865,

dated Jacksonville Fla

May 2, 1865,

shows the following with regard to the officer named above:

Post or station Jacksonville

Remarks: Post Adjutant Since Mar 14, 1865 pr G.O. 1 Post H.Q.

Book mark:

Curtis Clark

(546) Copyist.

M. | 3d Regt | U.S.C.T.

Samuel S Marseilles.

Rank Adjt, 3 Reg't U. S. Col'd Infantry.

Appears on

Field and Staff Muster Roll

for May & June, 1865.

Present or absent Absent

Stoppage, $ 100 for

Due Gov't, $ 100 for

Valuation of horse, $ 100

Valuation of horse equipments, $ 100

Remarks: On duty at Tallahassee, Fla. S.O. No 94. D. F. May 20th/65.

Book mark:

F. C. Dickerson.

(357) Copyist

M 1 3 W.S.6.7.

Samuel S. Marseilles
1st Lieut and adjt 3 Regt U.S. 6.7

Return

of the District of Florida, Dept. of the South,

for the month of June, 1865,
dated Jacksonville Fla
July 4, 1865,
shows the following with regard to the officer named above:

Post or station Tallahassee Fla
Remarks: Post Adjutant

Book mark:

Curtis Clark
Copyist.

(546)

VI | 3rd | **U.S.C.T.**

Samuel S. Marsilles

1st Lt. & Adj't, Co. ....., 3 Reg't U. S. Col'd Infantry.

Appears on an

Individual Muster-out Roll

of the organization named above. Roll dated Tallahassee Fla., June 22, 1865.

Muster-out to date June 22, 1865.

Last paid to Feb. 28, 1865.

Clothing account:

Last settled....., 186 ; drawn since $..... 100

Due soldier $..... 100 ; due U. S. $..... 100

Am't for cloth'g in kind or money adv'd $..... 100

Due U. S. for arms, equipments, &c., $..... 100

Bounty paid $..... 100 ; due $..... 100

Remarks: Appointed from civil life by the Secretary of War. Mustered out to accept promotion to Captain. Vice Charles F. Smith resigned. There is to be

Book mark: .....

Paull

(848) Copyist.

JAN. 19 6251926 1891

stopped from his pay
the value of 244 rations
drawn from Gov't.
Is entitled to $10. per
month extra pay for
duty as Adjutant in ad-
dition to pay as 1st Lieut.
of Infantry.

M. | 3d Regt. | U.S.C.T.

Samuel S Marsilles,

Rank 1st Lt Adjt, 3 Reg't U. S. Col'd Infantry.

Appears on

Field and Staff Muster Roll

for July & Aug., 1865.

Present or absent Absent

Stoppage, $ 100 for

Due Gov't, $ 100 for

Valuation of horse, $ 100

Valuation of horse equipments, $ 100

Remarks: Appointed Captain June 5th 1865.* Mustered June 23-65.

* As appears on roll.

Book mark:

F. C. Dickerson,
Copyist.

(357)

M | 3 | U.S.C.T.

Samuel S. Marsilles

Capt., Co. I, 3 Reg't U. S. Col'd Infantry.

Age 33 years.

Appears on an

Individual Muster-in Roll

of the organization named above. Roll dated Tallahassee, Fla, Aug 12, 1865.

Muster-in to date June 23, 1865.

Joined for duty and enrolled:

When June 23, 1865.

Where Tallahassee, Fla.

Period 3 years.

Remarks: Joined as 1st Lieut and Adj't. at Philadelphia Pa. Aug 1st 1863 by virtue of appointment from the Sec. of War. Promoted from 1st Lieut and Adj't. to Captain Co. I. same Regiment vice Charles F. Smith resigned. (over

Book mark:

Leary

(336) Copyist.

JAN. 19
6251392
☆1891☆

to date June 23d, 1865.

M 1 | 3 | U.S.C.T.

Samuel S. Marseilles

Adjt, Capt., Co. S, 3 Reg't U. S. Colored Inf.

Appears on **Returns** as follows:

Aug. 1863 - Present appointed by the President June 30. 1863 Reported for duty July 6. 1863.

Sept. 1863 - Presence or absence not stated.

Oct. 1863 to Jany 1864 - Present

Febry 1864 - Absent, detached A. A. A. Genl. on Staff of Col. Comd'g 2 Brig. Foalers Div. since Feb. 25. '64.

March 1864 - Absent detached as A. A. A. Genl. on Staff of Col. Comd'g 2 Brig. 2 Div. Feb. 25. '63.

April 1864 - Present, detached as A. A. A. G. from Febry 25. 1864 - to Apl. 21. 1864 & from Apl. 27. 1864 to Apl. 30. 1864. [over

Book mark:

O. T. Seyler

(546) Copyist.

JAN. 21. 40756976 1899.

May 1864 - Present on duty
June 1864 - Present in arrest since June 15. '64.
July 1864 to March 1865 - Present
April 1865 - Present Post Adj't. pr. G.O. No. 1 Post H. Qrs. Mar. 14, '65
May & June 1865 - Present Post Adjutant pr. G.O. No. 1 May 28. '65
July 1865 - Presence or absence not stated Promoted Capt. and assigned to Co. I, 3 U.S.C.T.
(Capt. Co. I.) Present
Aug. & Sept. 1865 - Present.

M | 3 | U.S.C.T.

Samuel S. Marsilles

1st Lieut, Co. A, 3 Reg't U. S. Col'd Infantry.

Appears on **Co. Muster-out Roll,** dated Jacksonville, Fla, Oct 31, 1865.

Muster-out to date ....., 186 .

Last paid to ....., 186 .

Clothing account:

Last settled....., 186 ; drawn since $.....100

Due soldier $.....100; due U. S. $.....100

Am't for cloth'g in kind or money adv'd $.....100

Due U. S. for arms, equipments, &c., $.....100

Bounty paid $.....100; due $.....100

Remarks: Mustered out Aug 1/63, to accept Commission as Adjutant 3d U. S. C. T.

Book mark:

(361) J. L. Morris
Copyist.

M. | 3d Regt. | U.S.C.T.

Samuel G. Marseilles

Rank 1st Lt Adjt, 3 Reg't U. S. Col'd Inf.

Appears on

Field and Staff Muster-out Roll

of the organization named above. Roll dated Jacksonville Fla, Oct 31, 1865.

Muster-out to date Oct 31, 1865.

Last paid to ....., 186 .

Clothing account:

Last settled....., 186 ; drawn since $.....100

Due soldier $.....100; due U. S. $.....100

Am't for cloth'g in kind or money adv'd $.....100

Due U. S. for arms, equipments, &c., $ 100

Bounty paid $.....100; due $.....100

Remarks: Appointed Captain June 5th 1865.

Book mark:

F. C. Dickerson.

(360) *Copyist.*

NARA 865

M. | 3 | U.S.C.T.

Saml. S. Marseilles

Capt., Co. I, 3 Reg't U. S. Col'd Infantry.

Appears on Co. Muster-out Roll, dated

Jacksonville Fla., Oct. 31, 1865.

Muster-out to date Oct. 31, 1865.

Last paid to June 30, 1865.

Clothing account:

Last settled ...., 186 ; drawn since $......100

Due soldier $..........100; due U. S. $..........100

Am't for cloth'g in kind or money adv'd $......100

Due U. S. for arms, equipments, &c., $..........100

Bounty paid $..........100; due $..........100

Remarks: Joined as 1st Lieut. Appointed 1st Lieut. and Adjt. Aug. 1. 1863. Appd. Capt. June 23. 1865. Due $10 pr month for Arms &c. from 31st July 1865. In Command of Company from 31st July, 1865.

Book mark: L. 228. Vol. 3. R. C. H. 65.

Cover

N. J. White
Copyist.

(861)

JAN. 19 6262907 1891

Has not complied with Par. 71. Mustering Regulations.

M | 3 | U.S.C.T.

Samuel S. Marseilles

1st Lieut. & Adjt., 3 Reg't U.S.C. Inf.

NOTATION.

Book mark: M 37 CT 1863

The Adjutant General's Office,

WAR DEPARTMENT,

Washington, March 17, 1909.

Under the provisions of the act of Congress, approved February 24, 1897, this officer is held and considered by this Department to have been mustered into the service of the United States in the grade of 1st Lt. & adjt.

Co. —, 3 Reg't U.S.C. Infantry,

to take effect from July 28, 1863, to fill an original vacancy.

W. H. Gibson

(A. G. O. 188) *Copyist.*

Marseilles, Saml. S.

Capt. Co. —, 3 Regt U. S. C. Inf.

5 Enclosures.

Bed Cards	Descriptive Lists
Burial Records	Final Statements
Certs. of Dis. for Discharge	Furloughs
C. M. Charges	Med. Des. Lists
Med. Certificates	Orders 2

Other papers relating to—

Admission to Hosp'l	Furlough
Casualty Sheet (Officer's)	Med. Examination
Confinement	Misc. Information 3
Contracts	Pay or Clothing
Death or Effects	Personal Reports
Desertions	Rank
Discharge from Hosp'l	Transfer to Hosp'l
Discharge from Service	Transfer to V. R. C.
Duty	Transportation

Hd. Qrs. Dist. of Fla.
Jacksonville, Fla.
September 20th 64.

Hatch, Jno. P.
Brig Genl Comdg

In accordance with instructions reforwards proceedings of a Genl Court Martial in case of Lieut Marseilles. Adjt. 3d Regt U.S.C.T. with copies of Gen. Orders No 53. publishing the same. &c. &c.

RECEIVED HD. QRS
SEP
25
1864
DEPT. SOUTH

NARA 898

Headquarters District of Florida,

JACKSONVILLE, Fla., September 20th 1864.

Capt. W. L. M. Burger -
Asst. Adjt. General D. S.

Captain:

In accordance with instructions, I have the honor to reforward the proceedings of General Court Martial in case of Lieut. Marseilles, Adjutant of the 3rd Regt. U. S. Colored Troops, with copies of General Orders No. 53, cur. ser. from these Headquarters, publishing the same. General Birney issued no order publishing his action on this case.

I am, Captain,
Very respectfully -
Your Obdt. Servt.
Geo. F. Israel
Brig. Genl Comdg.

S. S. Marseilles

3 U.S.C.T.

Genl Order 1

March 14/66

3 USCT

Head Qrs. Post of Jacksonville
March 14th 1865.

General Order
No 1

II. In obedience to Special Orders No. 60. Par. II. Head Quarters Dep't of the South dated Hilton Head S.C. March 10th 1865, the undersigned assumes command of the Post of Jacksonville.

All standing orders will remain in force until further orders.

1st Lieut. S. S. Marseilles Adj't. 3d U. S. C. T. will act as Post Adjutant.

(signed) B. C. Tillman
Col. 3d U. S. C. T.
Commanding Post.

Official
Saml. S. Marseilles
1st Lieut and Adjutant 3d U.S. C.T.
Acting Post adjutant.

Head Quarters Post of Jacksonville
March 14th. 1865.

General Order
No. 1

In obedience to Special Order No. 60, Par. II. Head Quarters Dept. of the South dated Hilton Head S.C. March 10th 1865, the undersigned assumes command of the Post of Jacksonville.

All standing orders will remain in force until further orders.

1st Lieut. S. S. Marseilles Adjt. 3d U. S. C. T. will act as Post Adjutant.

B. C. Tilghman
Col: 3d USCT.
Comdg Post

Official
Saml S. Marseilles
Lt. & Adj. 3d U.S.C.T.
Actg. Post Adjt

NARA 894

Marsalles S. S.
Adjt 3d U.S.C.T.

1865 March 18th

General Order No. 6

Tilghman B. C.
Col. 3d U.S.C.T.

Assumes Command
Post of Jacksonville

Recd. Mar. 18 1865

NARA 895

Head Qurs. Post of Jacksonville
March 14th 1865.

General Order }
No 1 }

II. In obedience to Special Orders No. 60. Par. II. Head Quarters Dept of the South dated Hilton Head S.C. March 10th 1865, the undersigned assumes command of the Post of Jacksonville.
All standing orders will remain in force until further orders.
1st Lieut. S. S. Marseilles Adjt. 3d U. S. C. T. will act as Post Adjutant.

(Signed) B. C. Tilghman
Col. 3d U. S. C. T.
Commanding Post.

Official
Sam. S. Marseilles
1st Lieut and Adjutant 3d U.S.C.T.
Acting Post Adjutant.

Sam. S. Marseilles

Captain

3rd U. S. C. Pro

3rd Reg. Ct.

Chf M. & D. O.
Phila Nov. 22/80
Duplicates sent
Pay Receipts

N. Acct
JHB.

Recd. Chf. M. O. Phila Nov 24/80 25623

NARA 897

City of Philadelphia }
State of Pennsylvania } S. S.

Before H. Tunison an alderman and Ex. Officio Justice of the peace in and for the said city of Philadelphia, personally came Saml. S. Marseilles Capt. 3rd U.S. C.T. and being duly sworn according to law, doth depose and say, I received my appointment from the President of the U.S. as first (1st) Lieut. in the 3rd U.S. C.T. at Lambertville Hunterdon County New Jersey, and accepted the same at the same place, at which time I was a civilian residing in the town of Lambertvill. N. J. have never received any allowance or pay for travelling expenses.

(signed) Samuel. S. Marseilles
Capt. 3rd U.S. C.T.

Sworn to and Subscribed before me this 21st day of November A.D. 1865
(signed) H. Tunison
Alderman
& Ex. O. Jus. of the peace

Seal

I certify that the above is a true copy
Saml. S. Marseilles
Capt. 3rd U.S.C.T.

Exp. furn. to Pay Dept.
Nov. 21, 1865

Dept South for June, July & Aug^st '64 furnish no evidence of trial — S.O. of the same Commands and of the same dates furnish no evidence of arrest or release — Letters Sent Bks no inf. —

[illegible]

Saml. S. Marseilles
1st Lieut & Adjt. 3rd U.S.C.T.

Div of S Commands
Answers Enquiry

NARA 899

Adjutant General's Office,

COLORED TROOPS BRANCH,

Mr Ellenbrook Oct 18th, 1875

Vol. C. T., 187

Wanted in the case of Samuel S. Marseilles, 1st Lieut. Co. Adjt

3rd Reg't U S C Troops

Cause of arrest & whether tried-

Present "In arrest since June 15" 1864" - Regt Ret for June 1864

A. J. G.

Respectfully,

E A Woodward
Chief Clerk.
Per H Salton

Adjutant General's Office,

Division of Discontinued Commands.

Oct 22d, 1875.

Vol. C. T., 187

Reply in case of Lieut S. S. Marseilles Adjutant

3d Reg't U. S. C. T.

Regtl Records show that he was relieved from duty, by instructions from the Genl Comdg, June 15" 64 and he again signs orders as Adjt July 15" 64 - No Cond. Mory Reports on file - Records of Dist Fla - June 13.64 A letter was received from Lieut M in regard to an affray with another officer of his regt and was referred to Dist Pro Mar for investigation - June 17" 64 - The Pro Mar forwards Charges & Specifications against Lieut M which were "referred for trial by G.C.M." June 19.64 There is no further record - G.O. Dist Florida and G.O

over

Marshal Andrew

Co K, 3 U.S. Col'd Inf.

Private | Private

CARD NUMBERS.

1	6251566	26	
2	6263085	27	
3	6263161	28	
4	6263244	29	
5	6263328	30	
6	6263404	31	
7	6263439	32	
8	6263517	33	
9	6263589	34	
10	6263660	35	
11	6263772	36	
12	6263849	37	
13	6263935	38	
14	6264027	39	
15	6264114	40	
16	9061551	41	
17		42	
18		43	
19		44	
20		45	
21		46	
22		47	
23		48	
24		49	
25		50	

Book Mark:

See also

S. 205-0349 P.O. m m

SS Lee R. Robbins Atty

Norwich

Conn

11/3/36

J.R.

A. G. 201 - 8/20/34 - LDB

NARA 902

M. | 3 | U.S.C.T.

Andrew H. Marshall

, Co. K., 3 Reg't U. S. Col'd Inf.

Appears on

Company Descriptive Book

of the organization named above.

DESCRIPTION.

Age 22 years; height 5 feet 4 1/2 inches.

Complexion Black

Eyes Black; hair Black

Where born Winchester Va.

Occupation Laborer

ENLISTMENT.

When July 15, 1863.

Where Phila. Pa.

By whom Lt Col Wagner; term 3 y'rs.

Remarks: Scar over left eye. Appointed Corporal Apr. 6 1864 Reduced to the Ranks Dec. 14" 1864 per G.O. No. 36 Reg. Hd. Qrs

Daggett Copyist.

(383g)

NARA 903

M | 3 | U.S.C.T.

S. H. Marshal

Appears with rank of Pvt on

Muster and Descriptive Roll of a Detachment of Substitutes forwarded

for the 3 Reg't U. S. Col'd Inf. Roll dated

Pittsburg, July 21, 1863.

Where born Winchester Va

Age 22 y'rs; occupation Laborer

When enlisted July 15, 1863.

Where enlisted Pittsburg

For what period enlisted 3 years.

Eyes Blk; hair Blk

Complexion Blk; height 5 ft. 4½ in.

When mustered in July 15, 1863.

Where mustered in Pittsburg

Bounty paid $ 100; due $ 100

Where credited

Company to which assigned K

Remarks: Sub for John Haberman, Lower St-clair Tp

Book mark:

Sauls
Copyist

(339)

M. | 3 | U.S.C.T.

H. H. Marshall,

Pvt., Co. K, 3 Reg't U. S. Col'd Infantry.

Age 22 years.

Appears on

Company Muster-in Roll

of the organization named above. Roll dated Phila., Pa., Aug. 10, 1863.

Muster-in to date July 15, 1863

Joined for duty and enrolled:

When July 15, 1863.

Where Phila., Pa.,

Period 3 years.

Remarks: Sub.,

Book mark:

Hastie

(856) Copyist.

H. | 3 | U.S.C.T.

Andrew
*A. H. Marshall,

Pvt., Co. K, 3 Reg't U. S. Colored Infantry.

Appears on

Company Muster Roll

for Aug. 10 to Aug. 31, 1863.

Present or absent Present.

Stoppage, $ 100 for

Due Gov't, $ 100 for

Remarks: Subs. Stoppage for Camp Equipments $0.44

* Unit appears on roll.

Book mark:

Pastie

(358) Copyist.

WM 3 U.S.C.T.

Andrew H. Marshall,

Pvt., Co. K, 3 Reg't U. S. Colored Infantry.

Appears on

Company Muster Roll

for Sept. & Oct., 1863.

Present or absent Present,

Stoppage, $ 100 for

Due Gov't, $ 100 for

Remarks:

Book mark:

Hastie

(358) Copyist.

N. | 3 | U.S.C.T.

Andrew F. Marshall,

Pvt., Co. K, 3 Reg't U. S. Colored Infantry.

Appears on

Company Muster Roll

for Nov. & Dec., 1863.

Present or absent Present

Stoppage, $ 100 for

Due Gov't, $ 100 for

Remarks: Stop for Camp Equipments $0.88

Book mark:

Plastie,

(358) Copyist.

M. | 3 | U.S.C.T.

Andrew H. Marshall,

Pvt., Co. K, 3 Reg't U. S. Colored Infantry.

Appears on

Company Muster Roll

for Jan. & Feb., 1864.

Present or absent Present

Stoppage, $ 100 for

Due Gov't, $ 100 for

Remarks: Stop for ordnance $6.20; for camp Equipments $3.46.

Book mark:

Hastie

(358) Copyist.

M | 3 | U.S.C.T.

Andrew H. Marshall

Corp, Co. K, 3 Reg't U. S. Colored Infantry.

Appears on

Company Muster Roll

for Mar & Apr, 1864.

Present or absent Present

Stoppage, $ 100 for

Due Gov't, $ 100 for

Remarks: Appointed Corp Apr 6/64 G.O. 20 Reg Hq.

Book mark:

Randolph

(858) Copyist.

M | 3 | U.S.C.T.

Andrew H. Marshall

Corp., Co. K, 3 Reg't U. S. Colored Infantry.

Appears on

Company Muster Roll

for May & June, 1864.

Present or absent Present

Stoppage, $ 100 for

Due Gov't, $ 100 for

Remarks:

Book mark:

Randolph

(358) Copyist.

M | 3 | U.S.C.T.

Andrew H. Marshall

Corp. Co. K, 3 Reg't U. S. Colored Infantry.

Appears on

Company Muster Roll

for July & Aug, 186 4.

Present or absent Present

Stoppage, $ 100 for

Due Gov't, $ 100 for

Remarks: Free on or before Apr 19/61

Book mark:

Randolph

(358) Copyist.

M | 3 | U.S.C.T.

Andrew H. Marshall

Corp., Co. K, 3 Reg't U. S. Colored Infantry.

Appears on

Company Muster Roll

for Sept & Oct, 1864

Present or absent Present

Stoppage, $ 100 for

Due Gov't, $ 100 for

Remarks: Paid $7.00 pr. month fr. enlist't to Feb 29th 64 Back pay due.

Book mark:

Randolph

(358) Copyist.

M. | 3 | U.S.C.T.

Andrew H. Marshall

Pvt., Co. K, 3 Reg't U. S. Colored Infantry.

Appears on

Company Muster Roll

for Nov & Dec, 1864

Present or absent Present

Stoppage, $ 100 for

Due Gov't, $ 100 for

Remarks: P's $7 per month from enlist't to Feb 29 '64 Back pay due. Reduced from Corp Dec '14 '64 per G.O. 56 Reg H.Q.

Book mark:

Randolph

Copyist.

(358)

M. | 3 | U.S.C.T.

Andrew H. Marshall

Pvt., Co. K, 3 Reg't U. S. Colored Infantry.

Appears on

Company Muster Roll

for Jan & Feb, 186 4.

Present or absent Present

Stoppage, $ 100 for

Due Gov't, $ 100 for

Remarks: Paid $7 per month from enlist'mt to Feb 29 '64 Back pay due Reduced from Corp. Dec 14/64 G.O. 56 Regt'l H'd Qr

Book mark:

Randolph

Copyist.

(858)

M | 3 | U.S.C.T.

Andrew H. Marshall

Pvt., Co. K, 3 Reg't U. S. Colored Infantry.

Appears on

Company Muster Roll

for March & April, 1865.

Present or absent Present

Stoppage, $ 100 for

Due Gov't, $ 100 for

Remarks: Free on or before April 19th 1861. Paid but $7.00 per month from enlistment to Feb. 29th 1864. Back pay due. Reduced from Corporal Dec. 14th 1864 per. G.O. No. 56 Reg. H.Q.

Book mark:

E. H. Hunter

(358) Copyist.

722 | 3 | U.S.C.T.

Andrew H. Marshall

Pvt., Co. K, 3 Reg't U. S. Colored Infantry.

Appears on

Company Muster Roll

for May & June, 1865.

Present or absent Present

Stoppage, $ 100 for

Due Gov't, $ 100 for

Remarks: Free on or before April 19th 1861. Reduced from corporal Dec. 14th 1864. Paid but $7.00 per month from enlistment to Feb. 29th 1864. Back pay due.

NEXT ROLL ON FILE MUSTER OUT:

Book mark:

E. H. Hunter

(358) Copyist.

NARA 917

M | 3 | U.S.C.T.

Andrew H. Marshall

Pvt., Co. K, 3 Reg't U. S. Col'd Infantry.

Appears on **Co. Muster-out Roll,** dated Jacksonville, Fla., Oct. 31, 1865.

Muster-out to date Oct. 31, 1865.

Last paid to June 30, 1865.

Clothing account:

Last settled....., 186 ; drawn since $.....100

Due soldier $.....100; due U. S. $ 12 79/100

Am't for cloth'g in kind or money adv'd $.....100

Due U. S. for arms, equipments, &c., $ 6. 00/100

Bounty paid $.....100; due $.....100

Remarks: Substitute. Appd. Corp. April 6th 1864. Reduced to the ranks Dec. 14th 1864. (Joined as private.)

Book mark: 2162 P.M.G. Apl. 18/66.

E. H. Heusler

(361) Copyist.

151

Martin, Aaron

Co. E, 3 U.S. Col'd Inf.

Private Private

CARD NUMBERS.

1	6258052	26	
2	6258144	27	
3	6258276	28	
4	6258386	29	
5	9061054	30	
6	407576905	31	
7		32	
8		33	
9		34	
10		35	
11		36	
12		37	
13		38	
14		39	
15		40	
16		41	
17		42	
18		43	
19		44	
20		45	
21		46	
22		47	
23		48	
24		49	
25		50	

Book Mark:

See also

S. 1063021 P. O. M. M.
R & P 394673 -
R & P. 462603
M. D. 918791

NARA 919

NARA 828

M. | 3 | U.S.C.T.

Aaron Martin

....., Co. ~~E~~, 3 Reg't U. S. Col'd Inf.

Appears on

Company Descriptive Book

of the organization named above.

DESCRIPTION.

Age 19 years; height 5 feet 11 inches.

Complexion Black

Eyes Black; hair Black,

Where born Florida

Occupation Laborer

ENLISTMENT.

When April 7th, 1865.

Where .....

By whom .....; term ..... y'rs.

Remarks: *Never mustered into Service

*Descriptive List forwarded to the G. O. Genl July 18th 1865.

*Written in Pencil.

R. Springgate

(383g) Copyist.

M | 3 | U.S.C.T.

Aaron Martin

Pvt., Co. E, 3 Reg't U. S. Col'd Infantry.

Appears on

Company Muster Roll

for March & April, 1865.

Present or absent Present

Stoppage, $ 100 for

Due Gov't, $ 100 for

Remarks: Recruit not mustered

Book mark:

Joseph Stewart

(858) Copyist

HRRR 922

M | 3 | U.S.C.T.

Aaron Martin

Pvt., Co. E, 3 Reg't U. S. Col'd Infantry.

Appears on

Company Muster Roll

for May & June, 1865.

Present or absent Present

Stoppage, $ 100 for

Due Gov't, $ 100 for

Remarks: Recruit — Due from enlistment

Book mark:

(858) Copyist

M | 3 | U.S.C.T.

Aaron Martin

Pvt, Co. E, 3 Reg't U. S. Col'd Infantry.

Appears on

Company Muster Roll

for July & Aug, 1865.

Present or absent

Stoppage, $ 100 for

Due Gov't, $ 100 for

Remarks: Deserted

Book mark:

Joseph Stewart

(858) Copyist

NARA 924

M 3 | U.S.C.T.

Aaron Martin

Pvt, Co. E, 3 Reg't U. S. Col'd Inf.

Appears on **Returns** as follows:

April 1865 - Apl. 6 '65 Jacksonville Recruit from Depot.

May 1865 - Absent with leave at Lake City

June & July 1865 - On duty Teamster pr. S.O. No. 48 Post Hd. Qrs. June 26. '65.

Book mark:

O. T. Taylor
Copyist.

(546)

M | 3 | **U.S.C.T.**

Aaron Martin

Priv., Co. E, 3 Reg't U. S. Col'd Infantry.

Appears on **Co. Muster-out Roll,** dated Jacksonville Fla, Oct 31, 1865.

Muster-out to date ....., 186 .

Last paid to ....., 186 .

Clothing account:

Last settled....., 186 ; drawn since $.....100

Due soldier $.....100; due U. S. $.....100

Am't for cloth'g in kind or money adv'd $.....100

Due U. S. for arms, equipments, &c., $.....100

Bounty paid $.....100; due $.....100

Remarks: Deserted at Jacksonville Fla. July 15. 1865. Descriptive Roll forwarded to A.M.G.O. Aug. 20. 1865. 19 years of age. Enrolled (over)

Book mark: .....

Joseph Stewart

(861) Copyist.

NARA 926

JAN. 19 6258386 ☆1891☆

April 7/65 at Jacksonville
Fla for 3 yrs - Not
mustered in -

NARA 327

100

Martin, George

Co C, 3 U.S. Col'd Inf.

Private | Private

CARD NUMBERS.

1	6254774	26	
2	6254849	27	
3	6254936	28	
4	6255012	29	
5	6255088	30	
6	6255158	31	
7	6255230	32	
8	6255300	33	
9	6255368	34	
10	6255441	35	
11	6255516	36	
12	6255600	37	
13	6255693	38	
14	6255787	39	
15	6255874	40	
16	9060777	41	
17		42	
18		43	
19		44	
20		45	
21		46	
22		47	
23		48	
24		49	
25		50	

Book Mark:

See also

NARA 928

D. 2430358 Fourom

Cert. in lieu 10/17/19 to former soldier.

-- Ewm

NARA 929

M | 3 | U.S.C.T.

George Martin

Co. C, 3 Reg't U. S. Col'd Inf.

Appears on

Company Descriptive Book

of the organization named above.

DESCRIPTION.

Age 22 years; height 5 feet 10 inches.

Complexion Yellow

Eyes Blk; hair Blk

Where born Clark Co Va

Occupation Farmer

ENLISTMENT.

When July 3, 1863

Where Phila

By whom Lt Col Wagner; term 3 y'rs.

Remarks:

(383g) S Houston Copyist.

M | 3 | U.S.C.T.

George Martin

Pvt., Co. B, 3 Reg't U. S. Col'd Infantry.

Age 22 years.

Appears on

Company Muster-in Roll

of the organization named above. Roll dated Phila Pa, July 26, 1863.

Muster-in to date July 3, 1863.

Joined for duty and enrolled:

When July 3, 1863.*

Where Phila Pa *

Period 3 years.*

Remarks:

*☞ Muster-in roll shows enrollment of all men of this company as of same date and place. See enrollment on subsequent card or cards.

Book mark:

C P McLaughlin

(356c) Copyin

M | 3 | U.S.C.T.

George Martin

Pvt., Co. C, 3 Reg't U. S. Col'd Infantry.

Appears on

Company Muster Roll

for July 31 to Aug 31, 1863.

Joined for duty and enrolled:

When July 3, 1863.*

Where Phila Pa.*

Period 3 years.*

Present or absent Present

Stoppage, $ 100 for

Due Gov't, $ 100 for

Remarks:

* See enrollment on card from muster-in roll.

Book mark:

C. S. McLaughlin

(358c) Copyist.

M | 3 | U.S.C.T.

George Martin

Pvt., Co. C, 3 Reg't U. S. Col'd Infantry.

Appears on

Company Muster Roll

for Sept & Oct, 1863.

Joined for duty and enrolled:

When July 5, 1863.*

Where Phila Pa.*

Period 3 years.*

Present or absent Present

Stoppage, $ 100 for

Due Gov't, $ 100 for

Remarks:

* ☞ See enrollment on card from muster-in roll.

Book mark:

C. S. McLaughlin

(358c) Copyist.

M | 3 | U.S.C.T.

George Martin

Pvt., Co. C, 3 Reg't U. S. Col'd Infantry.

Appears on

Company Muster Roll

for Nov. & Dec, 1863.

Joined for duty and enrolled:

When July 31, 1863.*

Where Phila Pa. *

Period 3 years.*

Present or absent Present

Stoppage, $ 100 for

Due Gov't, $ 100 for

Remarks:

* ☞ See enrollment on card from muster-in roll.

Book mark:

C. M. Laughlin

(358c) Copyist.

M | 3 | U.S.C.T.

George Martin

Pvt., Co. C, 3 Reg't U. S. Col'd Infantry.

Appears on

Company Muster Roll

for Jan & Feb, 1864.

Joined for duty and enrolled:

When Jan 3, 1863.*

Where Phila Pa *

Period 3 years.*

Present or absent Present

Stoppage, $ 100 for

Due Gov't, $ 100 for

Remarks:

* ☞ See enrollment on card from muster-in roll.

Book mark:

C. D. McLaughlin

(358c) Copyist.

M | 3 | U.S.C.T.

George Martin

Pvt., Co. C, 3 Reg't U. S. Col'd Infantry.

Appears on

Company Muster Roll

for Mar & Apr, 1864.

Joined for duty and enrolled:

When July 3, 1863.*

Where Phila Pa *

Period 3 years.*

Present or absent Present

Stoppage, $ 100 for

Due Gov't, $ 100 for

Remarks:

* ☞ See enrollment on card from muster-in roll.

Book mark:

C. L. McLaughlin

(358c) *Copyist.*

M. | 3 | U.S.C.T.

George Martin,

Pvt., Co. C, 3 Reg't U. S. Col'd Infantry.

Appears on

Company Muster Roll

for May and June, 1864

Joined for duty and enrolled:

When July 3d, 1863*

Where Philadelphia, Pa.*

Period 3 years.*

Present or absent Present.

Stoppage, $.....100 for .....

Due Gov't, $.....100 for .....

Remarks:.....

* ☞ See enrollment on card from muster-in roll.

Book mark:.....

Sharin

(358c) *Copyist.*

M. | 3 | U.S.C.T.

George Martin,

Pvt., Co. C, 3 Reg't U. S. Col'd Infantry.

Appears on

Company Muster Roll

for July and Aug., 1864

Joined for duty and enrolled:

When July 3d, 1863*

Where Philadelphia, Pa.*

Period 3 years.*

Present or absent Present

Stoppage, $ 100 for

Due Gov't, $ 100 for

Remarks: Free on or before April 19th. 1861.

* ☞ See enrollment on card from muster-in roll.

Book mark:

Thomas

(358c) *Copyist.*

M. | 3 | U.S.C.T.

George Martin,

Pvt., Co. C, 3 Reg't U. S. Col'd Infantry.

Appears on

Company Muster Roll

for Sept & Oct, 1864.

Joined for duty and enrolled:

When July 3d, 1863*

Where Philadelphia, Pa.*

Period 3 years.*

Present or absent Present.

Stoppage, $ 100 for

Due Gov't, $ 100 for

Remarks: Free on or before April 19th. 1861. Paid seven dollars per month to April 30th. 1864, Back pay due.

* ☞ See enrollment on card from muster-in roll.

Book mark:

Sharin.

(358c) *Copyist.*

M. | 3 | U.S.C.T.

George Martin,
Pvt., Co. C, 3 Reg't U. S. Col'd Infantry.

Appears on

Company Muster Roll

for Nov. & Dec., 1864

Joined for duty and enrolled:

When July 3d., 1863.*

Where Philadelphia Pa.*

Period 3 years.*

Present or absent Present

Stoppage, $..... 100 for .....

Due Gov't, $..... 100 for .....

Remarks: Paid but $7.00 per month to April 30th. 1864, Back pay due.
Free.

* ☞ See enrollment on card from muster-in roll.

Book mark:

Martin

(358c) *Copyist.*

M. | 3 | U.S.C.T.

George Martin,

Pvt., Co. C, 3 Reg't U. S. Col'd Infantry.

Appears on

Company Muster Roll

for Jan. and Feb., 1865.

Joined for duty and enrolled:

When July 3d, 1863.*

Where Philadelphia, Pa.*

Period 3 years.*

Present or absent x Present

Stoppage, $..... 100 for .....

Due Gov't, $..... 100 for .....

Remarks: Free.

* ☞ See enrollment on card from muster-in roll.

Book mark:

x Added by J. L. F., Nov 24/13

Sharin

(358c) *Copyist.*

M. | 3 | U.S.C.T.

George Martin

Pvt, Co. C, 3 Reg't U. S. Col'd Infantry.

Appears on

Company Muster Roll

for Mch & Apl, 1865.

Joined for duty and enrolled:

When 3 July, 1863.*

Where Phila Pa.*

Period 3 years.*

Present or absent present

Stoppage, $ 100 for

Due Gov't, $ 100 for

Remarks: Free

* See enrollment on card from muster-in roll.

Book mark:

G. E. Dayton

(358c) *Copyist.*

M. 3 U.S.C.T.

George Martin

Pvt, Co. C, 3 Reg't U. S. Col'd Infantry.

Appears on

Company Muster Roll

for May & June, 1865.

Joined for duty and enrolled:

When 3 July, 1863.*

Where Phila Pa; *

Period 3 years.*

Present or absent present,

Stoppage, $ 100 for

Due Gov't, $ 100 for

Remarks: Free

* ☞ See enrollment on card from muster-in roll.

Book mark:

G. E. Dayton

(358c) Copyist.

M. | 3 | U.S.C.T.

George Martin

Pvt, Co. C, 3 Reg't U. S. Col'd Infantry.

Appears on

Company Muster Roll

for July + Aug, 1865.

Joined for duty and enrolled:

When 3 July, 1863.*

Where Phila Pa.*

Period 3 years.*

Present or absent present.

Stoppage, $ 23/100 for ordnance

Due Gov't, $ /100 for

Remarks:

* ☞ See enrollment on card from muster-in roll.

Book mark:

G. E. Dayton

(358c) *Copyist.*

HARA 944

M. | 3 | U.S.C.T.

George Martin

Pvt, Co. C, 3 Reg't U. S. Col'd Infantry.

Appears on **Co. Muster-out Roll,** dated Jacksonville, Fla. 31 Oct, 1865.

Muster-out to date 31 Oct, 1865.

Last paid to 30 June, 1865.

Clothing account:

Last settled ....., 186 ; drawn since $ 100

Due soldier $ 4 13/100; due U. S. $ 100

Am't for cloth'g in kind or money adv'd $ 100

Due U. S. for arms, equipments, &c., $ 6 23/100

Bounty paid $ ..... 100; due $ 100 00/100

Remarks: Private from Enlistment.

Book mark:

F. E. Dayton

(361) *Copyist.*

Martin Jacob 76th

Co A, 3 U.S. Col'd Inf.

Wagoner | Private

CARD NUMBERS.

1	6260725	26	
2	6260806	27	
3	6260889	28	
4	6261001	29	
5	6261051	30	
6	6261132	31	
7	6261210	32	
8	6261311	33	
9	6261385	34	
10	6261463	35	
11	6261540	36	
12	6261624	37	
13	6261718	38	
14	6261809	39	
15	9061349	40	
16		41	
17		42	
18		43	
19		44	
20		45	
21		46	
22		47	
23		48	
24		49	
25		50	

Book Mark:

See also

NARA 946

3.639324 P.O.-311 m

M. | 3 | U.S.C.T.

Jacob Martin

....., Co. H., 3 Reg't U. S. Col'd Inf.

Appears on

Company Descriptive Book

of the organization named above.

DESCRIPTION.

Age 31 years; height 5 feet 6 inches.

Complexion Brown

Eyes Black; hair Black

Where born Chester Co. Penn.

Occupation Farmer

ENLISTMENT.

When July 20, 1863.

Where Philada. Penn.

By whom Col Wagner; term 3 y'rs.

Remarks: Mustered as teamster.

Daggett

(383g) Copyist.

M | 3 | U.S.C.T.

Jacob Martin

Wagoner, Co. H, 3 Reg't U. S. Col'd Infantry.

Age 31 years.

Appears on

Company Muster-in Roll

of the organization named above. Roll dated Philadelphia Pa July 25, 1863.

Muster-in to date July 20, 1863

Joined for duty and enrolled:

When July 20, 1863.

Where Phila d Pa.

Period 3 years.

Remarks:

Book mark:

O. G. Smith

(356) Copyist.

NARA 949

Me | 3 | U.S.C.T.

Jacob Martin

Wagoner, Co. H, 3 Reg't U. S. Col'd Infantry.

Appears on

Company Muster Roll

for July 25 to Aug 31, 1863.

Present or absent Present

Stoppage, $ ..... 100 for .....

Due Gov't, $ ..... 100 for .....

Remarks:

Book mark:

O G Smith

Copyist

(358)

NARA PSS

M | 3 | U.S.C.T.

Jacob Martin

Teamster, Co. H, 3 Reg't U. S. Col'd Infantry.

Appears on

Company Muster Roll

for Sept & Oct, 1863.

Present or absent Present

Stoppage, $ 100 for

Due Gov't, $ 100 for

Remarks:

Book mark:

O P Smith

(358) Copyist

M | 3 | U.S.C.T.

Jacob Martin

Pri, Co. H, 3 Reg't U. S. Col'd Infantry.

Appears on

Company Muster Roll

for Nov & Dec, 1863.

Present or absent Present

Stoppage, $ 100 for

Due Gov't, $ 100 for

Remarks:

Book mark:

C. G. Smith

Copyist

(358)

No. 3 U.S.C.T.

Jacob Martin

Teamster, Co. H, 3 Reg't U. S. Col'd Infantry.

Appears on

Company Muster Roll

for Jan & Feb, 1864.

Present or absent Present

Stoppage, $ 100 for

Due Gov't, $ 100 for

Remarks:

Book mark:

O Y Smith

Copyist

(358)

M | 3 | U.S.C.T.

Jacob Martin

Wagg'nr, Co. H, 3 Reg't U. S. Col'd Infantry.

Appears on

Company Muster Roll

for March & April, 1864.

Present or absent Present

Stoppage, $ 100 for

Due Gov't, $ 100 for

Remarks:

Book mark:

W F Rogan

Copyist

(358)

M | 3 | U.S.C.T.

Jacob Martin

Wagoner, Co. H, 3 Reg't U. S. Col'd Infantry.

Appears on

Company Muster Roll

for May & June, 1864.

Present or absent Present

Stoppage, $ 100 for

Due Gov't, $ 100 for

Remarks:

Book mark:

Henderson

(358) Copyist

NARA 955

M | 3 | U.S.C.T.

Jacob Martin

Pvt., Co. H, 3 Reg't U. S. Col'd Infantry.

Appears on

Company Muster Roll

for July & Aug., 1864.

Present or absent Present

Stoppage, $ ..... 100 for .....

Due Gov't, $ ..... 100 for .....

Remarks: Free on or before April 19, 1861.

Book mark: .....

W T Ragan
Copyist

(858)

M | 3 | U.S.C.T.

Jacob Martin

Pvt., Co. H, 3 Reg't U. S. Col'd Infantry.

Appears on

Company Muster Roll

for Sept. & Oct., 1864.

Present or absent Present

Stoppage, $ 100 for

Due Gov't, $ 100 for

Remarks: Free. Paid $7.00 pr. mo. from enlistment to July 29, 1864. Back pay due.

Book mark:

W. B. Ragan

(358) Copyist

M | 3 | U.S.C.T.

Jacob Martin

Pvt., Co. H, 3 Reg't U. S. Col'd Infantry.

Appears on

Company Muster Roll

for Nov. & Dec., 1864

Present or absent Present

Stoppage, $ 100 for

Due Gov't, $ 100 for

Remarks: Free. Paid $70.00 for mo. from enlistment to July 29, 1864. Back pay due.

Book mark:

W. F. Regan

(858) Copyist

M | 3 | U.S.C.T.

Jacob Martin

Pvt., Co. H, 3 Reg't U. S. Col'd Infantry.

Appears on

Company Muster Roll

for Jan'y & Feb'y, 1865.

Present or absent Present

Stoppage, $ — 2/100 for Clothing Camp and Garrison Equipage.

Due Gov't, $ ..... 100 for .....

Remarks: Free on or before April 19, 1861.

Book mark:

U A Rogers

(858) Copyist

NARA 959

M. | 3 | U.S.C.T.

Jacob Martin.

Priv, Co. H, 3 Reg't U. S. Col'd Infantry.

Appears on

Company Muster Roll

for Mar. & Apr., 1865.

Present or absent Present.

Stoppage, $ $\frac{02}{100}$ for C&G.E.

Due Gov't, $ $\frac{}{100}$ for

Remarks: Free.

Book mark:

Pal

Copyist

(358)

M. | 3 | U.S.C.T.

Jacob Martin

Pvt., Co. H, 3 Reg't U. S. Col'd Infantry.

Appears on

Company Muster Roll

for May & June, 1865.

Present or absent Present.

Stoppage, $ 0. 02/100 for C & G.C.

Due Gov't, $ ..... 100 for .....

Remarks: Free on or before Apr. 19/61.

NEXT ROLL ON FILE MUSTER OUT.

Book mark:

Pol

(358) Copyist

M. | 3 | U.S.C.T.

Jacob Martin.

Pvt., Co. H, 3 Reg't U. S. Col'd Infantry.

Appears on **Co. Muster-out Roll,** dated Jacksonville Fla Oct. 31, 1865.

Muster-out to date Oct. 31, 1865.

Last paid to June 30, 1865.

Clothing account:

Last settled....., 186 ; drawn since $.....100

Due soldier $ 16. 80/100; due U. S. $.....100

Am't for cloth'g in kind or money adv'd $.....100

Due U. S. for arms, equipments, &c., $.....100

Bounty paid $.....100; due $ 100. 00/100

Remarks: Teamster at enrollment. Returned to ranks Nov. 1/63

Book mark: 7850 P.M.G. Apr. 7/66.

Pol

(361) Copyist.

NARA 962

Martin Jacob

Co. ——, 3 Reg't. U.S.C. Inf.

(Philippine Insurrection.) (CIVIL WAR)

—— Inclosures.

Bed Cards	Ex. Preliminary to M. O.
Burial Records	Final Statements
Certs. of Dis. for Discharge	Fines
C. M. Charges	Furloughs or L. of A.
Descriptive Lists	Med. Certificates
Descriptive and Assignment Cards	Med. Des. Lists
Discharge Certificates	Orders
Enlistment Papers	Resignations

Other papers relating to—

Admission to Hosp'l	Furlough or L. of A.
Confinement	Med. Examination
Contracts	Misc. Information
Death or Effects	Pay or Clothing
Desertion	Personal Reports
Discharge from Hosp'l	Rank
Discharge from Service	Transfer to Hosp'l
Duty	Transportation

NARA 963

MICROFILM PUBLICATION M 1845

COMPILED MILITARY SERVICE RECORDS
OF VOLUNTEER UNION SOLDIERS WHO SERVED WITH
THE UNITED STATES COLORED TROOPS (USCT)
THIRD INFANTRY

PERSONAL PAPERS' TARGET SHEET

PLEASE NOTE THE CHECKED INFORMATION ABOUT THE PERSONAL PAPERS IN THIS FILE:

☐ NO PERSONAL PAPERS WERE FOUND IN THIS FILE WHEN THE RECORDS WERE ARRANGED FOR MICROFILMING.

☑ __1__ PERSONAL PAPER(S) FOUND IN THIS FILE WHEN THE RECORDS WERE ARRANGED FOR MICROFILMING.

NARA 964

Stu 1461, 1864,

LANCASTER, PA.

September 17, 1864.

STEVENS, THADDEUS

Captain and Provost Marshal,

9th District Pa.

D 723 C T 1864

Requests to be furnished with the date of the enlistment of Jacob Martin. Co. "D" 3. U.S. C. T.

Adjutant General's Office

September 17th 1864

Respectfully referred to Major C. W. Foster. A. A. Genl.

E. D. Townsend

Asst. Adjt. Genl.

F

a.S.

Rec'd A. G. O. (Bureau C. T.) Sept 17, 1864

ADJUTANT GENERAL'S OFFICE RECEIVED SEPT 16 1864

Rec'd A. G. O. Sept. 16/64

49½ Rec'd Sept 22/64

War Dept, A. G. Office.

Sept. 20", 1864.

Respectfully returned to Captain Thaddeus Stevens, Provost Marshal 9" District Pennsylvania, Lancaster, Penn. with the information that the name of Jacob Martin does not appear on the rolls of Company "D", 3d U.S. Colored Troops, on file in this office. On the Muster-in Roll of Company "H" of said Regiment, Jacob Martin is reported enrolled and mustered into service July 20", 1864

By order of the Secretary of War:

C. W. Foster

A. A. Gen'l Vols.

E. B. Vol 1 Page 434

NARA 965

Provost Marshal's Office,
Ninth District, Penna.

Lancaster, Pa., September 14th 1864

Brig. Genl. L. Thomas
Adjutant General U.S.A.
Washington D.C.

General

I respectfully request to be informed the date of the enlistment of Jacob Martin, Co D. 3rd Regt. U.S. C. T.

Very Respectfully
Your Obdt. Servant
Thaddeus Stevens Jr.
Capt. & Pro. Mar.
9th Dist. Penna.

Martin, John L.

Co. B, 3 U.S. Col'd Inf.

Sergeant Sergeant

CARD NUMBERS.

1	6257112	26	
2	6257197	27	
3	6257285	28	
4	6257441	29	
5	6257364	30	
6	6257526	31	
7	6257610	32	
8	6257693	33	
9	6257773	34	
10	6257853	35	
11	6257932	36	
12	6258001	37	
13	6258093	38	
14	6258187	39	
15	6258281	40	
16	9060989	41	
17		42	
18		43	
19		44	
20		45	
21		46	
22		47	
23		48	
24		49	
25		50	

Book Mark:

See also

M | 3 | U.S.C.T.

John F. Martin

, Co. E, 3 Reg't U. S. Col'd Inf.

Appears on

Company Descriptive Book

of the organization named above.

DESCRIPTION.

Age 33 years; height 5 feet 10 inches.

Complexion Brown

Eyes Black; hair Black

Where born Lancaster, Penna.

Occupation Mason

ENLISTMENT.

When July 6th, 1863.

Where Philada Penna

By whom Col. Wagner; term 3 y'rs.

Remarks:

R. Springgarth

(383g) Copyist.

M | 3 | U.S.C.T.

John L. Martin

Sergt., Co. E., 3 Reg't U. S. Col'd Infantry.

Age_____years.

Appears on

Company Muster-in Roll

of the organization named above. Roll dated

Philad Pa, Aug 1, 1863.

Muster-in to date July 6, 1863

Joined for duty and enrolled:

When July 6, 1863.

Where Philad Pa

Period 3 years.

Remarks:

Book mark:

S. P. York

(856) Copyist.

M. | 3 | U.S.C.T.

John Martin

Sergt., Co. E, 3 Reg't U. S. Col'd Infantry.

Appears on

Company Muster Roll

for Aug. 1 to 31, 1863.

Present or absent Present

Stoppage, $ 100 for

Due Gov't, $ 100 for

Remarks:

Book mark:

Daggett

(858) Copyist

M | 3 | U.S.C.T.

John Martin

Sergt, Co. E, 3 Reg't U. S. Col'd Infantry.

Appears on

Company Muster Roll

for Sept & Oct, 1863.

Present or absent Present

Stoppage, $ 100 for

Due Gov't, $ 100 for

Remarks:

Book mark:

S. O. York

Copyist

(358)

M | 3 | U.S.C.T.

John L. Martin

1st Sgt., Co. E, 3 Reg't U. S. Col'd Infantry.

Appears on

Company Muster Roll

for Nov & Dec, 1863.

Present or absent Present

Stoppage, $ 100 for

Due Gov't, $ 100 for

Remarks: Stop for Canteen

Book mark:

A. D. York

Copyist

(358)

M | 3 | U.S.C.T.

John L. Martin

Sergt., Co. E, 3 Reg't U. S. Col'd Infantry.

Appears on

Company Muster Roll

for Jany & Feby, 1864.

Present or absent Present

Stoppage, $ 100 for

Due Gov't, $ 100 for

Remarks: Stop for Canteen

Book mark:

S O York

(358) Copyist

NARA 973

M | 3 | U.S.C.T.

John L. Martin
Sergt., Co. E, 3 Reg't U. S. Col'd Infantry.

Appears on

Company Muster Roll

for March & April, 1864.

Present or absent Present

Stoppage, $ ......100 for

Due Gov't, $ ......100 for

Remarks: Stop. piece Shelter Tent

Book mark:

S. O. York
Copyist

(858)

M | 3 | U.S.C.T.

John L. Martin

Sergt. Co. E, 3 Reg't U. S. Col'd Infantry.

Appears on

Company Muster Roll

for May & June, 1866

Present or absent Present

Stoppage, $ ..... 100 for .....

Due Gov't, $ ..... 100 for .....

Remarks: .....

Book mark: .....

S W Jones

Copyist

(858)

NARA 975

M | 3 | U.S.C.T.

John L. Martin

Sergt Co. E, 3 Reg't U. S. Col'd Infantry.

Appears on

Company Muster Roll

for July & Augt 1864

Present or absent Present

Stoppage, $ 100 for

Due Gov't, $ 100 for

Remarks: Free on or before April 19. 1861.

Book mark:

S W Forrest

(858) Copyist

NARA 976

M | 3 | U.S.C.T.

John L. Martin

Sergt., Co. E, 3 Reg't U.S. Col'd Infantry.

Appears on

Company Muster Roll

for Sept & Oct, 1864

Present or absent Present

Stoppage, $ ...... 100 for ......

Due Gov't, $ ...... 100 for ......

Remarks: Paid $7. per Month from enlistment to Apr 30. 1864. back pay due.

Book mark: ......

S W Forrest
Copyist

(858)

NARA 977

M | 3 | U.S.C.T.

John L. Martin

Sergt., Co. E, 3 Reg't U.S. Col'd Infantry.

Appears on

Company Muster Roll

for Nov & Dec, 1864

Present or absent Present

Stoppage, $ .... 100 for ....

Due Gov't, $ .... 100 for ....

Remarks: Paid $7. per month from enlistment to April 30/64 back pay due

Book mark:

S W Forrest
Copyist

(858)

NARA 978

M | 3 | U.S.C.T.

John L. Martin

Sgt. Co. E, 3 Reg't U. S. Col'd Infantry.

Appears on

Company Muster Roll

for Jany & Feb, 1865

Present or absent Present

Stoppage, $ ---- 100 for ----

Due Gov't, $ ---- 100 for ----

Remarks: Paid $7. per month from enlistment to April 30/64. back pay due

Book mark:

S W Farrell
Copyist

(858)

NARA 979

M | 3 | U.S.C.T.

John L. Martin

Sergt, Co. E, 3 Reg't U. S. Col'd Infantry.

Appears on

Company Muster Roll

for March & April, 1865.

Present or absent Present

Stoppage, $ ___ 100 for ___

Due Gov't, $ ___ 100 for ___

Remarks: Paid $7- per mo. from enlistment to Apr. 30, 64. back pay due.

Book mark: 9S2503...

Joseph Stewart
Copyist

(858)

M | 3 | U.S.C.T.

John L Martin

Serg't, Co. E, 3 Reg't U. S. Col'd Infantry.

Appears on

Company Muster Roll

for May & June, 1865.

Present or absent Present

Stoppage, $ ..... 100 for .....

Due Gov't, $ ..... 100 for .....

Remarks: Paid $7 per month from enlistment to Apr 30" 64 back pay due.

Book mark:

N L Johnston

(858) Copyist

NARA 981

M | 3, | U.S.C.T.

John L. Martin

Sergt., Co. E, 3 Reg't U. S. Col'd Infantry.

Appears on

Company Muster Roll

for July & Aug, 1865.

Present or absent Present

Stoppage, $ 100 for

Due Gov't, $ 100 for

Remarks:

Book mark:

Joseph Stewart

(358) *Copyist*

M | 3 | U.S.C.T.

John L. Martin

Sgt, Co. E, 3 Reg't U. S. Col'd Infantry.

Appears on **Co. Muster-out Roll,** dated Jacksonville Fla Oct 31, 1865.

Muster-out to date Oct 31, 1865.

Last paid to June 30, 1865.

Clothing account:

Last settled ....., 186 ; drawn since $ 100

Due soldier $ 7 05/100; due U. S. $ 100

Am't for cloth'g in kind or money adv'd $ 100

Due U. S. for arms, equipments, &c., $ 9 00/100

Bounty paid $ ..... 100; due $ 100

Remarks: Sergt from Enlistment Stoppage for camp camp & Garrison Equipage lost $6.50

Book mark: 372.730

(361) Joseph Stewart
Copyist.

NARA 983

Martin, Robert R.

Co. A, 3 U.S. Col'd Inf.

1st Lieutenant 1st Lieutenant

CARD NUMBERS.

1	62618 69	26	
2	6261952	27	
3	6262036	28	
4	6262116	29	
5	6262194	30	
6	6262269	31	
7	6262346	32	
8	6262421	33	
9	6262494	34	
10	6262565	35	
11	6262647	36	
12	6262722	37	
13	6262813	38	
14	6262908	39	
15	94284 77	40	
16		41	
17		42	
18		43	
19		44	
20		45	
21		46	
22		47	
23		48	
24		49	
25		50	

Book Mark:

See also

NARA 984

S. 1201531 [illegible]

2. Mrs. Hastone 6/20/32

M | 3 | U.S.C.T.

Robert R. Martin

1st Lt., Co....., 3 Reg't U. S. Col'd Inf.

Appears on

Regimental Descriptive Book

(List of Commissioned Officers)

of the regiment named above.

Rank 1st Lieut.

Date of appointment July 18 1863.

Remarks:

Sabine

(384) *Copyist.*

M | 3 | U.S.C.T.

Robert R. Martin

1 Lt., Co. I, 3 Reg't U. S. Col'd Infantry.

Age 23 years.

Appears on

Company Muster-in Roll

of the organization named above. Roll dated Philad^a Pa. July 26, 1863.

Muster-in to date July 26, 1863

Joined for duty and enrolled:

When July 18, 1863.

Where Philadelphia Pa.

Period 3 years.

Remarks: Mustered into the Service of the U. S. by Captain Sergeant U.S.A. 26th July 1863

Book mark:

C. E. McLaughlin

(856) Copyist.

NARA 587

M | 3 | U.S.C.T.

Robert R. Martin

1 Lt., Co. I, 3 Reg't U. S. Col'd Infantry.

Appears on

Company Muster Roll

for July 26 to Aug. 31, 1863.

Present or absent Present

Stoppage, $ 100 for

Due Gov't, $ 100 for

Remarks:

Book mark:

C. E. McLaughlin

(858) Copyist

NARA 983

M | 3 | U.S.C.T.

Robert R. Martin

1 Lt.; Co. I, 3 Reg't U. S. Col'd Infantry.

Appears on

Company Muster Roll

for Sep. & Oct., 1863.

Present or absent Present

Stoppage, $ 100 for

Due Gov't, $ 100 for

Remarks: Extra pay due as Commander of the Co. from July 21st to August 31st 1863.

Book mark:

C. E. McLaughlin
Copyist

(358)

M. | 3 | U.S.C.T.

Robert R. Martin

1 Lt, Co. I, 3 Reg't U. S. Col'd Infantry.

Appears on

Company Muster Roll

for Nov. & Dec., 1863.

Present or absent Present

Stoppage, $ 100 for

Due Gov't, $ 100 for

Remarks:

Book mark:

C. E. McLaughlin

(858) Copyist

M | 3 | U.S.C.T.

Robert R. Martin

1 Lt., Co. I, 3 Reg't U. S. Col'd Infantry.

Appears on

Company Muster Roll

for Jan. & Feb., 1864.

Present or absent Present

Stoppage, $ 100 for

Due Gov't, $ 100 for

Remarks:

Book mark:

C. E. McLaughlin

(858) Copyist

M | 3 | U.S.C.T.

Robert R. Martin

1 Lt, Co. I, 3 Reg't U. S. Col'd Infantry.

Appears on

Company Muster Roll

for Mar & Apr, 1864.

Present or absent Present

Stoppage, $ 100 for

Due Gov't, $ 100 for

Remarks:

Book mark:

(858) Copyist

No. 3 U.S.C.T.

Robert R. Martin

1 Lt, Co. I, 3 Reg't U. S. Col'd Infantry.

Appears on

Company Muster Roll

for May & June, 1864.

Present or absent Present

Stoppage, $ 100 for

Due Gov't, $ 100 for

Remarks: Enlisted man employed as waiter from June 20 to June 30 11 days

Book mark:

(858) Copyist

NARA 993

M | 3 | U.S.C.T.

Robert R. Martin

1 Lt., Co. I, 3 Reg't U. S. Col'd Infantry.

Appears on

Company Muster Roll

for July & Aug, 1864.

Present or absent present

Stoppage, $ 100 for

Due Gov't, $ 100 for

Remarks: Employed enlisted man waiter from June 20 to 30 11 days. In command of the Company from June 19 64 to Aug 31 1864 Ten dollars per month due for responsibility of Arms &c. 2 Mos. & 20 days $27 33/100

Book mark:

D J Moore
Copyist

(858)

M | 3 | U.S.C.T.

Robert R. Martin

1 Lt, Co. I, 3 Reg't U. S. Col'd Infantry.

Appears on

Company Muster Roll

for Sept & Oct, 1864

Present or absent Present

Stoppage, $ 100 for

Due Gov't, $ 100 for

Remarks: Due $10.00 for responsibility & arms &c for the month of Sept, (only) In command of the company from the 1st to the 30 of Sept. 1864

Book mark:

A. Moore
Copyist

(858)

NARA 995

M | 3 | U.S.C.T.

Robert R. Martin

1. Lt., Co. I, 3 Reg't U. S. Col'd Infantry.

Appears on

Company Muster Roll

for Nov. & Dec., 1864.

Present or absent Present

Stoppage, $.......100 for

Due Gov't, $.......100 for

Remarks: Due $10 00 for responsibility of arms & for the month of Sept. In command of the Company from the 1 to the 30 of Sept. 1864

Book mark:

C. J. Mann

(858) Copyist

NARA 996

N | 3 | U.S.C.T.

Robert A. Martin

1 Lt, Co. I, 3 Reg't U. S. Col'd Infantry.

Appears on

Company Muster Roll

for Jany & Feby, 1865.

Present or absent Present

Stoppage, $ 100 for

Due Gov't, $ 100 for

Remarks: Due $ 10 00/100 Responsibility of Arms &c. for the month of Sept. In command of the Company from the 1. to the 30 of Sept 1864

Book mark:

A. Nixon
Copyist

(858)

M. | 3 | U.S.C.T.

Robert R. Martin

1st Lt., Co. I, 3 Reg't U. S. Col'd Infantry.

Appears on

Company Muster Roll

for Mar. & Apr., 1865.

Present or absent Present.

Stoppage, $ 100 for

Due Gov't, $ 100 for

Remarks: One $10. for the Responsibility of arms etc. for month of September 1864.
In Command of Company from 1st to 30th Sept. 1864.

Book mark:

W. F. White

(858) Copyist

M. | 3 | U.S.C.T.

Robert R. Martin

1st Lt., Co. I, 3 Reg't U. S. Col'd Infantry.

Appears on

Company Muster Roll

for May & June, 1865.

Present or absent Present.

Stoppage, $ 100 for

Due Gov't, $ 100 for

Remarks: Due $10. for Responsibility of Arms &c. for month of Sept. 1864.
In Command of Company from 1st to 30th Sept. 1864
Due $10. pr month for Responsibility of Arms &c. from May 10th 65. to June 30th 65.
In Command of Company from May 10th 65. to June.

NEXT ROLL ON FILE MUSTER OUT.

Book mark:

N. G. White

(858) Copyist

NARA 999

M.	3	U.S.C.T.

Robert R. Martin

1st Lieut., Co. I, 3 Reg't U. S. Col'd Infantry.

Appears on **Co. Muster-out Roll,** dated

Jacksonville Fla. Oct. 31, 1865.

Muster-out to date Oct. 31, 1865.

Last paid to June 30, 1865.

Clothing account:

Last settled ...., 186 ; drawn since $......100

Due soldier $..........100; due U. S. $..........100

Am't for cloth'g in kind or money adv'd $......100

Due U. S. for arms, equipments, &c., $..........100

Bounty paid $..........100; due $..........100

Remarks: Joined as 1st Lieut. Due $10. pr. month for Responsibility of Arms &c. from June 30. 1865. to July 31. 1865. In Command of Company from June 30. 1865. to July 31. 1865.

Book mark: L. 228. Vol. 3. R.C.H. 65.

Cover

(361) A. J. White. Copyist.

JAN. 19
6262908
1891

Has satisfied the Mustering Officer that he is not indebted to the Government.

Martin, Robert R.

1st Sgt, Co. I, 3 Reg't U.S.C. Inf.

2 Enclosures.

Bed Cards	Descriptive Lists
Burial Records	Final Statements
Certs. of Dis. for Discharge	Furloughs
C. M. Charges	Med. Des. Lists
Med. Certificates	Orders

Other papers relating to—

Admission to Hosp'l	Furlough
Casualty Sheet (Officer's)	Med. Examination
Confinement	Misc. Information 2
Contracts	Pay or Clothing
Death or Effects	Personal Reports
Desertions	Rank
Discharge from Hosp'l	Transfer to Hosp'l
Discharge from Service	Transfer to V. R. C.
Duty	Transportation

Robert R. Martin
1st Lieutenant
3d U. S. C. Troops.

3d U.S.C.T.

Chf M. & D. O.
Phil Nov. 22/65.
duplicate sent
Pay Dept.

Noted
JB

recd chf. M.O. Phila Nov. 24/65.

City of Philadelphia
State of Pennsylvania } ss.

Before, H. Tunison an Alderman and ex-officio Justice of the Peace, in, and for the said City of Philadelphia, personally came Robert R. Martin, 1st Lieut Co. I. 3rd Regt. U.S.C.T. and being duly sworn according to law, doth depose, and say, "I received my appointment from the President of the U.S. as 1st Lieutenant 3d Regt U.S.C.T. at Washington City D.C. and accepted the same at the same place, at which time I was a soldier in the service of the United States. I have never received any allowances or pay for travelling expenses.

Robt. R. Martin.
1st Lieut Co. I. 3d U.S.C.T.

Sworn to, and subscribed before me, this 22d day of November A D 1865.
H. Tunison
Alderman
& Ex O.T. the Peace

Dup. copies sent Col Taggart Nov. 22 1865.

NARA1004

Robert R. Martin ✓
1st Lieut Co "I" 3d US C T

Dis of D Commandt
answers inquiry

NARA1005

Adjutant General's Office,

COLORED TROOPS BRANCH,

Mr Ellerbrook

Feby 19" , 1876

Vol. C. T., 187

Wanted in the case of Robert R. Martin 1st Lieut, Co. "I",

Third Reg't U. S. C. Troops

Cause of arrest & record of trial-if any-

"Present 'In arrest'" - Regt Rpt for October 1864

H. J. G.

Respectfully,

E. A. Woodward

Chief Clerk.

S. F. Halton

Adjutant General's Office,

Div of Discntd Commands

Feby 25, 1876

Vol. C. T., 187

Reply in case of Robert R. Martin, 1st Lieut, Co. "I",

3d Reg't U. S. C. T.

Hdqrs. Dist. of Fla, Jacksonville, Fla, Jany 11, '65 G.O. No. 5 — Charge 1st: "Drunkenness on duty." Charge 2d: — "Disobedience of Orders." Plea: "Not Guilty" — Finding: "Not Guilty." And the Court does, therefore: — "Acquit him" 1st Lieut R. R. Martin, 3d U. S. C. Troops.

"Approved"

By order of Brig. Genl. E. P. Scammon

(Sgd.) Thomas J. Robinson

A. A. A. General.

C. A. G.

Mason John

Co F, 3 U.S. Col'd Inf.

Private Private

CARD NUMBERS.

1	6258452	26	
2	6258528	27	
3	6258614	28	
4	6258692	29	
5	6258770	30	
6	6258845	31	
7	6258923	32	
8	6258996	33	
9	6259068	34	
10	6259142	35	
11	6259218	36	
12	6259302	37	
13	6259394	38	
14	6259540	39	
15	9061119	40	
16		41	
17		42	
18		43	
19		44	
20		45	
21		46	
22		47	
23		48	
24		49	
25		50	

Book Mark:

See also

NARA1007

M. | 3. | U.S.C.T.

John Mason

, Co. F, 3 Reg't U.S. Col'd Inf't

Appears on

Company Descriptive Book

of the organization named above.

DESCRIPTION.

Age 17 years; height 5 feet 3 1/4 inches.

Complexion Yellow

Eyes Brown; hair Black.

Where born Philada. Penna.

Occupation Farmer

ENLISTMENT.

When July 8, 1863.

Where Philada. Penna.

By whom G. Col. Wagner; term 3 y'rs.

Remarks: Scar from cut on top of right knee— Mustered in by Capt. Sergeant U.S.A. July 8. 1863.

R. Springgarth
Copyist.

(383g)

M | 3 | U.S.C.T.

John Mason

Pri., Co. F, 3 Reg't U. S. Col'd Infantry.

Age 17 years.

Appears on

Company Muster-in Roll

of the organization named above. Roll dated Philad^a, Pa., Aug. 10, 1863.

Muster-in to date July 8, 1863

Joined for duty and enrolled:

When July 8, 1863.

Where Philadelphia, Pa.

Period 3 years.

Remarks:

Book mark:

Beck

(356) Copyist.

M | 3 | U.S.C.T.

John Mason

Priv., Co. F, 3 Reg't U. S. Col'd Infantry.

Appears on

Company Muster Roll

for Aug 10 to 31, 1863.

Present or absent Present

Stoppage, $ 100 for

Due Gov't, $ 100 for

Remarks: Canteen and Haversack shot away in action Aug 19 '63

Book mark:

WBeck
Copyist

(858)

M | 3 | U.S.C.T.

John Mason

Priv., Co. F, 3 Reg't U. S. Col'd Infantry.

Appears on

Company Muster Roll

for Sept. & Oct., 1863.

Present or absent Present

Stoppage, $ 100 for

Due Gov't, $ 100 for

Remarks:

Stop for one Knapsack,

Book mark:

Beck

(858) Copyist

Pvt | 3 | U.S.C.T.

John Mason

Priv., Co. F, 3 Reg't U. S. Col'd Infantry.

Appears on

Company Muster Roll

for Nov & Dec, 1863.

Present or absent Present

Stoppage, $ 100 for

Due Gov't, $ 100 for

Remarks:

Book mark:

Beck

(258)

Copyist

NARA 1812

M | 3 | U.S.C.T.

John Mason

Priv., Co. F, 3 Reg't U. S. Col'd Infantry.

Appears on

Company Muster Roll

for Jan & Feb., 1864.

Present or absent Present

Stoppage, $ 100 for

Due Gov't, $ 100 for

Remarks: Stop for one Knapsack

Book mark:

(358) Copyist

M | 3 | U.S.C.T.

John Mason

Priv., Co. F, 3 Reg't U. S. Col'd Infantry.

Appears on

Company Muster Roll

for Mar & Apr, 1864.

Present or absent Absent

Stoppage, $ 100 for

Due Gov't, $ 100 for

Remarks:

in arrest waiting sentence Genl Court Martial Jacksonville, Fla.

Book mark:

W Beck

(858) Copyist

M | 3 | U.S.C.T.

John Mason

Pvt, Co. F, 3 Reg't U. S. Col'd Infantry.

Appears on

Company Muster Roll

for May & June, 1864

Present or absent Not Stated

Stoppage, $ 100 for

Due Gov't, $ 100 for

Remarks:

Book mark:

C B Sayer
Copyist

(858)

M | 3 | U.S.C.T.

John Mason

Cor, Co. F, 3 Reg't U. S. Col'd Infantry.

Appears on

Company Muster Roll

for July & Aug't, 1864.

Present or absent Absent

Stoppage, $ ___ 100 for ___

Due Gov't, $ ___ 100 for ___

Remarks: In arrest Jacksonville Fla (Free on or before 19" Apl 1861) In confinement Jacksonville Fla since 6 March 6-1864

Book mark: ___

C. B. Sayer
Copyist

(858)

NARA1016

M | 3 | U.S.C.T.

John Mason

Pri., Co. F, 3 Reg't U. S. Col'd Infantry.

Appears on

Company Muster Roll

for Sept & Oct, 1864.

Present or absent Present

Stoppage, $ 43/100 for Ordnance

Due Gov't, $ /100 for

Remarks: Free - Paid but 7.00 per mo from Enlistment to Dec 31-63 Back Pay due

Book mark:

C. B. Sayer

(858) Copyist

NARA1017

M | 3 | U.S.C.T.

John Mason

Pvt., Co. F, 3 Reg't U. S. Col'd Infantry.

Appears on

Company Muster Roll

for Nov & Dec, 1864.

Present or absent Not Stated

Stoppage, $ 43/100 for Ordnance

Due Gov't, $ /100 for

Remarks: + ~~Fre~~ Paid but $7.00 per month from Enlistment to Dec 31-63 back pay due
+ Free on or before April 19-1861

Book mark:

L B Sayre
Copyist

(358)

M | 3 | U.S.C.T.

John Mason

Mu, Co. F, 3 Reg't U. S. Col'd Infantry.

Appears on

Company Muster Roll

for Jany & Feby, 1865.

Present or absent Present

Stoppage, $ 40/100 for ordnance

Due Gov't, $ 100 for

Remarks: Free on or before Apl 19-1861
Reed pay $7.00 per Muster from
Enlistment till December 31-63
Back pay due sentenced to
death by Gen C M - Apl 1864
Pardoned by President M. S. Feby 65

Book mark:

C B Sayer
(358) Copyist

No. | 3 | U.S.C.T.

John Mason

Pvt, Co. F, 3 Reg't U. S. Col'd Infantry.

Appears on

Company Muster Roll

for March & April, 1865.

Present or absent Present

Stoppage, $ 0 43/100 for Ord

Due Gov't, $ 100 for

Remarks: Free on or before Apl 19
Paid Bty $7.00 per Month
from Enlistment to April 30 64
Back Pay due

Book mark:

S. W. Tucker

(858) Copyist

No. 3 U.S.C.T.

John Mason

Pvt, Co. F, 3 Reg't U. S. Col'd Infantry.

Appears on

Company Muster Roll

for May & June, 1865.

Present or absent absent

Stoppage, $ 0 48/100 for Ord

Due Gov't, $ 100 for

Remarks: Free on or before Apr 19
Paid bounty $7.00 per month
from Enlistment to Dec 31/63
Back Pay Due
Absent in Confinement

NEXT ROLL ON FILE MUSTER OUT.

Book mark:

S. W. Tucker

(858) Copyist

No. 3 U.S.C.T.

John Mason

Pvt., Co. I, 3 Reg't U. S. Col'd Infantry.

Appears on **Co. Muster-out Roll,** dated Jacksonville Fla Oct 31, 1865.

Muster-out to date ....., 186 .

Last paid to ....., 186 .

Clothing account:

Last settled....., 186 ; drawn since $.....100

Due soldier $.....100; due U. S. $.....100

Am't for cloth'g in kind or money adv'd $.....100

Due U. S. for arms, equipments, &c., $.....100

Bounty paid $.....100; due $.....100

Remarks: Deserted Oct 26-1865 from Guard House at Jacksonville Fla, Enrolled as Private

Book mark: V. 140 P 158. 72

(361) S. W. Smith
Copyist.

HARH1822

MICROFILM PUBLICATION M 1845

COMPILED MILITARY SERVICE RECORDS
OF VOLUNTEER UNION SOLDIERS WHO SERVED WITH
THE UNITED STATES COLORED TROOPS (USCT)
THIRD INFANTRY

PERSONAL PAPERS' TARGET SHEET

PLEASE NOTE THE CHECKED INFORMATION ABOUT THE PERSONAL PAPERS IN THIS FILE:

☐ NO PERSONAL PAPERS WERE FOUND IN THIS FILE WHEN THE RECORDS WERE ARRANGED FOR MICROFILMING.

☒ 4 PERSONAL PAPER(S) FOUND IN THIS FILE WHEN THE RECORDS WERE ARRANGED FOR MICROFILMING.

Mason, John

P, Co. F, 3 Reg't U. S. C. T.

3 Enclosures.

Bed Cards	Final Statements
Burial Records	Furloughs or L. of A
Certs. of Dis. for Discharge	Med. Certificates
C. M. Charges	Med. Des. Lists
Descriptive Lists	Orders 5
Discharge Certificates	Pris. of War Record
Enlistment Papers	Resignations

Other papers relating to—

Admission to Hosp'l	Furlough or L. of A
Casualty Sheet	Med. Examination
Confinement	Misc. Information
Contracts	Pay or Clothing
Death or Effects	Personal Reports
Desertion	Rank
Discharge from Hosp'l	Transfer to Hosp'l
Discharge from Service	Transfer to V. R. C.
Duty	Transportation

NARA1024

War Department
Feby 6th 65

Special Order
No 60
In relation to John Mason

3 U.S.C.T.

RECEIVED HD QTS
FEB
18
1865
DIST. OF FLA.

NARA1025

SPECIAL ORDERS, No. 60.

WAR DEPARTMENT,
ADJUTANT GENERAL'S OFFICE,
Washington, February 6th, 1865.

(*Extract.*)

* * * * *

2. Private *John Mason*, 3d U. S. Colored Troops, sentenced by General Court Martial, convened by General Orders, No. 9, Headquarters, Provisional Division, Jacksonville, Florida, March 2d, 1864, to be shot, is hereby pardoned, and will be restored to duty with his regiment.

* * * * *

By order of the President of the United States :

E. D. TOWNSEND,

Assistant Adjutant General.

OFFICIAL:

E D Townsend

Assistant Adjutant General.

Headquarters Dept of the South,
Hilton Head. S.C. Feby 12th 1865
"Official"

Thorndike D. Hodges.

Capt 33rd U.S.C.T.
Actg Asst Adjt Genl,

[stamp] DEPT SOUTH

C.O. 3rd U.S. Col. Troops,

Hd. Dept of South

Rcd. H. Qr. 3d U.S.C.T.
Feb. 19th 1865

NARA1026

finished

RECEIVED
FEB
14
1866
ADJUTANT GEN'LS OFFICE

HARR1027

SPECIAL ORDERS, No. 60.

WAR DEPARTMENT,
ADJUTANT GENERAL'S OFFICE,
Washington, February 6th, 1865.

(*Extract.*)

* * * * *

2. Private *John Mason*, 3d U. S. Colored Troops, sentenced by General Court Martial, convened by General Orders, No. 9, Headquarters, Provisional Division, Jacksonville, Florida, March 2d, 1864, to be shot, is hereby pardoned, and will be restored to duty with his regiment.

* * * * *

By order of the President of the United States :

E. D. TOWNSEND,

Assistant Adjutant General.

OFFICIAL :

Assistant Adjutant General.

Lieut Col Wreck

Mason, Jno.

3" U.S.C.T.

HARA1829

E

SPECIAL ORDERS, No. 60.

WAR DEPARTMENT,
ADJUTANT GENERAL'S OFFICE,
Washington, February 6th, 1865.

(*Extract.*)

* * * * *

2. Private *John Mason*, 3d U. S. Colored Troops, sentenced by General Court Martial, convened by General Orders, No. 9, Headquarters, Provisional Division, Jacksonville, Florida, March 2d, 1864, to be shot, is hereby pardoned, and will be restored to duty with his regiment.

* * * * *

By order of the President of the United States:

E. D. TOWNSEND,
Assistant Adjutant General.

OFFICIAL:

Assistant Adjutant General.

Geo. Foster

No evidence of a trial on file with General Orders Dist. of Fla., or Dist. of East Fla. for 1865.
Co. and Regtl. Records on file furnish no information regarding the date and cause of his arrest in 1864.
Mg Report dated Febry 20/65, reports: "Private John Mason returned to his Company for duty. (Pardoned by Pt. U. S)"
Report dated May 4/65, reports: "Private John Mason in arrest at Jacksonville, Fla.,
Report dated July 13/65, reports: "Private John Mason retd. to this Company for duty, from arrest July 13/65."
Report dated July 22/65, reports: "Private John Mason in arrest for Mutiny in this Company."
Morning Rep't dated Oct. 25/65, reports: - "Private John Mason returned in arrest." — No further report in this case on file. Other records of the Co. and Regt. on file furnish no information regarding his desertion in October 1865.

C. A. G.

J. A. G.
Feby 3/76

John Mason
Pvt Co F 3d U S C T
Div of F. D. Commands
Answer inquiry

NARA1031

Adjutant General's Office,

COLORED TROOPS BRANCH,

Mr Ellerbrook

5

January 13th, 1876

Vol. C. T., 187

Wanted in the case of John Mason Private, Co. "F", Third Reg't U. S. C. Troops 1st Cause of arrest. Record of Trial & Pardon.
"In arrest awaiting sentence G.C.M." M Rolls from Feby 29-64 to Dec 31-1864
Present for duty. "Sentenced to death by G.C.M. Apl 1864. pardoned by Prest U.S.
Feby 1865" M.R. for Jany & Feby 1865. 2nd Cause of Confinement – record of trial –
"Absent in confinement" M.R. for May & June 1865 & R. Ro for July, August
& Sept 1865 – "Deserted Oct 26.65 from Guard House Jacksonville" M.O. Roll.

Respectfully,

H. J. G.

E. A. Woodward
Chief Clerk.
S. F. Halton

Adjutant General's Office,

Div. of Direct Commands

Jany 31, 1876

Vol. C. T., 187

Reply in case of John Mason, Co. "F", 3d Reg't U.S.C.T.

1st Records of Prisoners confined, Pro. Mar. Jacksonville, Fla. report: "John Mason Co. F, 3d U.S.C.T., confined May 8/64, awaiting promulgation of sentence." ("Date, offense and charges on which confined not reported.) There is no order promulgating sentence or ordering his release on file with General Orders Dept of the South for 1864, Special Orders Dept. of the South for 1864, or 1865, or General or Special Orders Dist. of Fla. for 1864 or 1865.

2d A Roll of Prisoners confined at Jacksonville Fla. reports John Mason Co "F" 3d U.S.C.T. confined May 3/65 by Pro. Marshal – charge "Theft" – released June 12/65."

(over)

Matthews William

Co —, 3 U.S. Col'd Inf.

CARD NUMBERS.

1 6252087	26
2	27
3	28
4	29
5	30
6	31
7	32
8	33
9	34
10	35
11	36
12	37
13	38
14	39
15	40
16	41
17	42
18	43
19	44
20	45
21	46
22	47
23	48
24	49
25	50

Book Mark:

See also

RMP 760163

M. | 3 | **U.S.C.T.**

William Matthews

....., Co. ....., 3 Reg't U. S. Col'd Infantry.

Appears on

Descriptive List of Deserters

dated November 23, 1865.

Deserted:

When After Draft, 186 .

Where .....

Arrested:

When Mch 14, 1865.

Where .....

Remarks: Drafted and failed to report as ordered was arrested and turned over to Col John Woolley Pro Mal 8th Army Corps Baltimore Md as a deserter and the reward allowed for his apprehension and delivery $30.00 (over)

Book mark: .....

J. B. Stearns

(851) Copyist.

JAN. 19

6252087

☆1891☆

21 years of age
drafted Nov* 19/64 at
Ellicotts Mills and
for 1 year—

Not taken up on
Muster rolls of Regt.

* Corrected by P.J.G. Dec. 18. 1903

766

Mattingly Henry

Co —, 3 U.S. Col'd Inf.

CARD NUMBERS.

1 6252069	26
2	27
3	28
4	29
5	30
6	31
7	32
8	33
9	34
10	35
11	36
12	37
13	38
14	39
15	40
16	41
17	42
18	43
19	44
20	45
21	46
22	47
23	48
24	49
25	50

Book Mark:

See also

M. | 3 Inf. | **U.S.C.T.**

Henry Mattingly

....., Co. ....., 3 Reg't U. S. Col'd Infantry.

Appears on

Descriptive List of Deserters

dated October 30, 1865.

Deserted:

When After Draft, 186 .

Where .....

Arrested:

When June 18, 1865.

Where Charles Co. Md

Remarks: Drafted and failed to report as ordered was arrested and turned over to Lieut. John Wooley, Pro. Mar. 8th A.C. Baltimore Md. as a deserter, and the reward allowed for his apprehension and delivery $30.00

Orr

Book mark: .....

J. A. Stearns

(351) Copyist.

JAN. 19
6252069
1891

Drafted July 18/64 at
Ellicott's Mills Md for
3 yrs - 21 years of age -
Not taken upon muster
rolls of Regt -

167

May, Isaac

Co. E, 3 U.S. Col'd Inf.

Private Private

CARD NUMBERS.

1	6251424	26	
2	6257491	27	
3	6257572	28	
4	6257655	29	
5	6257738	30	
6	6257814	31	
7	6257897	32	
8	6257974	33	
9	6258057	34	
10	6258149	35	
11	6258241	36	
12	6252026	37	
13	6258360	38	
14	9061031	39	
15		40	
16		41	
17		42	
18		43	
19		44	
20		45	
21		46	
22		47	
23		48	
24		49	
25		50	

Book Mark:

See also

NARA1040

S 578570 P.O. aff

A-1670560 - P.O. Mem

R&P 5217379

A. 3014379 P.O. Rct

M. | 3 | U.S.C.T.

Isaac May

, Co. E, 3 Reg't U. S. Col'd Inf.

Appears on

Company Descriptive Book

of the organization named above.

DESCRIPTION.

Age 25 years; height 5 feet 10 inches.

Complexion Black

Eyes Black; hair Black

Where born Florida

Occupation Laborer

ENLISTMENT.

When February 13, 1864.

Where Baldwin

By whom Capt Burke, term 3 y'rs.

Remarks:

(383g) Copyist.

M | 3 | U.S.C.T.

Isaac May

Pvt., Co. E, 3 Reg't U.S. Col'd Infantry.

Appears on

Company Muster Roll

for Jany & Feby, 1864.

Present or absent Present

Stoppage, $ 100 for

Due Gov't, $ 100 for

Remarks: Never mustered into service there being no Mustering officer present

Book mark:

S O York

Copyist

(858)

M. | 3 | U.S.C.T.

Isaac May

Appears with rank of Private on

Muster and Descriptive Roll of a Detachment of U. S. Vols. forwarded

for the 3 Reg't U. S. Col'd Infantry. Roll dated Jacksonville Florida Mar 29, 1864.

Where born Baldwin, Florida

Age 25 y'rs; occupation Laborer

When enlisted Feb. 13, 1864.

Where enlisted Baldwin Fla.

For what period enlisted 3 years.

Eyes Black; hair Black

Complexion Black; height 5 ft. 10 in.

When mustered in Mch. 29, 1864.

Where mustered in Jacksonville Fla.

Bounty paid $ 10 100; due $ 100

Where credited

Company to which assigned "E"

Remarks:

Book mark:

Saggett

(339) Copyist.

NARA1844

M | 3 | U.S.C.T.

Isaac May

Pri, Co. E, 3 Reg't U.S. Col'd Infantry.

Appears on

Company Muster Roll

for March & April, 1864

Present or absent Present

Stoppage, $ 100 for

Due Gov't, $ 100 for

Remarks:

Book mark:

(858) S. O. York Copyist

NARA1045

M | 3 | U.S.C.T.

Isaac May

Pvt., Co. E, 3 Reg't U. S. Col'd Infantry.

Appears on

Company Muster Roll

for May & June 1864

Present or absent Present

Stoppage, $ ..... 100 for .....

Due Gov't, $ ..... 100 for .....

Remarks: .....

Book mark: .....

S W Forrest
Copyist

(858)

M | 3 | U.S.C.T.

Isaac May

Pvt., Co. E, 3 Reg't U. S. Col'd Infantry.

Appears on

Company Muster Roll

for July & Aug, 1864

Present or absent Present

Stoppage, $ 100 for

Due Gov't, $ 100 for

Remarks: Free on or before April 19 1861

Book mark:

S W Grimes

(858) Copyist

No. 3 U.S.C.T.

Isaac May

Pvt., Co. E, 3 Reg't U. S. Col'd Infantry.

Appears on

Company Muster Roll

for Sept & Oct, 1864

Present or absent Present

Stoppage, $ 100 for

Due Gov't, $ 100 for

Remarks: Paid in full to August 31. 1864,

Book mark:

S W Fowler

Copyist

(358)

No. 3 U.S.C.T.

Isaac May

Pvt., Co. E, 3 Reg't U. S. Col'd Infantry.

Appears on

Company Muster Roll

for Nov & Dec, 1864

Present or absent Present

Stoppage, $ ..... 100 for .....

Due Gov't, $ ..... 100 for .....

Remarks: Paid in full to Aug 31/64.

Book mark: .....

S W Fornes

(358)

Copyist

M | 3 | U.S.C.T.

Isaac May

Pvt., Co. E, 3 Reg't U. S. Col'd Infantry.

Appears on

Company Muster Roll

for Jany & Feby, 186 5

Present or absent Present

Stoppage, $ ..... 100 for .....

Due Gov't, $ ..... 100 for .....

Remarks: Paid in full to August 31/64

Book mark: .....

S W Jones

(358) Copyist

M | 3 | U.S.C.T.

Isaac May

Pvt, Co. E, 3 Reg't U. S. Col'd Infantry.

Appears on

Company Muster Roll

for March & April, 1865.

Present or absent Present

Stoppage, $ 100 for

Due Gov't, $ 100 for

Remarks: Paid in full to Aug 31. 64

Book mark:

Joseph Stewart

(358) Copyist

M | 3 | U.S.C.T.

Isaac May

Pvt., Co. E, 3 Reg't U. S. Col'd Infantry.

Appears on

Company Muster Roll

for May & June, 1865.

Present or absent Present

Stoppage, $ 100 for

Due Gov't, $ 100 for

Remarks: Paid in full to Aug. 31" 64.

Book mark:

(358) Copyist

M | 3 | U.S.C.T.

Isaac May

Pvt, Co. E, 3 Reg't U. S. Col'd Infantry.

Appears on

Company Muster Roll

for July & Aug, 186 5.

Present or absent Present

Stoppage, $ 100 for

Due Gov't, $ 100 for

Remarks:

Book mark:

Joseph Stewart

(858) Copyist

M | 3 | U.S.C.T.

Isaac May

Private, Co. E, 3 Reg't U. S. Col'd Infantry.

Appears on a

Detachment Muster-out Roll

of the organization named above. Roll dated Jacksonville, Fla., Oct. 31, 1865.

Muster-out to date Oct. 31, 1865.

Last paid to June 30, 1865

Clothing account:

Last settled ....., 186 ; drawn since $..... 100

Due soldier $ 5 42/100; due U. S. $..... 100

Am't for cloth'g in kind or money adv'd $..... 100

Due U. S. for arms, equipments, &c., $ 6 100

Bounty paid $..... 100 due $..... 100

Remarks: Stoppage for Camp and Garrison Equipage Lost $4.52. Private from Enlistment. Mustered out in obedience to Circular No. 44 A. G. O. War Dept. 1865 and G. O. No. 10 Hd Qrs. Mil. Dir. Gulf

Book mark: 675 1881

[Over]

O. J. Markle,

(349) Copyist.

NARA1054

JAN. 19 6252026 1891

1865, his services being
no longer required.

M | 3 | U.S.C.T.

Isaac May

Pvt., Co. E, 3 Reg't U. S. Col'd Infantry.

Appears on **Co. Muster-out Roll,** dated Jacksonville Fla, Oct 31, 186 5.

Muster-out to date Oct 31, 186 5.

Last paid to June 30, 186 5.

Clothing account:

Last settled....., 186 ; drawn since $.....100

Due soldier $ 5 42/100; due U. S. $.....100

Am't for cloth'g in kind or money adv'd $.....100

Due U. S. for arms, equipments, &c., $ 6 1+/100

Bounty paid $.....100; due $.....100

Remarks: Private from enlistment. Discharge given, not paid on this roll. Stoppage for camp and garrison Equipage # 4.57+
Desires to remain South. (over)

Book mark: 675. 181. M.O. on file.

as it appears on roll.
+ tone from roll.

Joseph Stewart
Copyist.

(861)

JAN. 19 6258360 1891

Under General orders
No. 10 Hd. Qrs. Mil. Div.
Gulf - Series 1864.

Added Sept. 26/98 CNA

NARA1057

Isaac May

________, Co. ________, 3 Reg't U.S.C.T.

________ Enclosures.

Bed Cards	Final Statements
Burial Records	Furloughs or L. of A
Certs. of Dis. for Discharge	Med. Certificates
C. M. Charges	Med. Des. Lists
Descriptive Lists	Orders
Discharge Certificates	Pris. of War Record
Enlistment Papers	Resignations

Other papers relating to—

Admission to Hosp'l	Furlough or L. of A
Casualty Sheet	Med. Examination
Confinement	Misc. Information
Contracts	Pay or Clothing
Death or Effects	Personal Reports
Desertion	Rank
Discharge from Hosp'l	Transfer to Hosp'l
Discharge from Service	Transfer to V. R. C.
Duty	Transportation

DECLARATION OF RECRUIT.

I, Isaac Gray desiring to VOLUNTEER as a Soldier in the Army of the United States, for the term of THREE YEARS, Do Declare, That I am twenty five years and ——— months of age; that I have never been discharged from the United States service on account of disability or by sentence of a court martial, or by order before the expiration of a term of enlistment; and I know of no impediment to my serving honestly and faithfully as a soldier for three years.

GIVEN at Baldwin Fla
the 13th day of February 1864

Witness:
Capt E. P. Barker

Isaac his X mark Gray

No. 4

Isaac Gray
Volunteered at Baldwin Fla
February 13th 1864,
By Capt Edw'd P Barker
3rd Regiment of U.S.C.T.

1st enlistment; ~~last served in Company~~ (—)
Reg't of

Discharged ——— 18 .

Received From Second Auditor Sep, 1st. 1892.

NOTE 1.—This blank will be used for both enlistments and re-enlistments—enlistment of veterans, &c., &c., in the volunteer service. They will be made out in duplicate in all cases—one to accompany the recruiting return of the superintendent (not the recruiting officer) to the Adjutant General, and one to accompany the accounts of the officer who pays bounty, &c. The Regiment and Company in which the soldier last served should be given on the back.

NOTE 2.—An enlistment holds to service. A muster-in must, in all cases, precede payment of pay, bounty, pension, &c. A muster-in roll must, in all cases, be filed in the Adjutant General's Office as evidence of muster-in. The mustering officer, commissary, assistant commissary of musters, as the case may be, will countersign both enlistments as having mustered the soldier into the service of the United States before either of them is given to the disbursing officer.

CONSENT IN CASE OF MINOR.

I, ... Do CERTIFY, That I am the .... of ....; that the said .... is .... years of age; and I do hereby freely give my CONSENT to his volunteering as a SOLDIER in the ARMY OF THE UNITED STATES for the period of THREE YEARS.

GIVEN at ....
the .... day of ....

Witness:

(A. G. O. No. 74 & 76.)

NARA1059

VOLUNTEER ENLISTMENT.

STATE OF Florida **TOWN OF** Baldwin

I, Isaac May born in Savanah in the State of Georgia aged twenty five years, and by occupation a Shiner DO HEREBY ACKNOWLEDGE to have volunteered this thirteenth day of February 1864, to serve as a ***Soldier*** in the **Army of the United States of America,** for the period of *THREE YEARS*, unless sooner discharged by proper authority: Do also agree to accept such bounty, pay, rations, and clothing, as are, or may be, established by law for volunteers. And I, Isaac May do solemnly swear, that I will bear true faith and allegiance to the ***United States of America,*** and that I will serve them honestly and faithfully against all their enemies or opposers whomsoever; and that I will observe and obey the orders of the President of the United States, and the orders of the officers appointed over me, according to the Rules and Articles of War.

Sworn and subscribed to, at Jacksonville this 18th day of March 1864 BEFORE Capt. E. P. Barker

his
Isaac X May
mark

I CERTIFY, ON HONOR, That I have carefully examined the above-named Volunteer, agreeably to the General Regulations of the Army, and that, in my opinion, he is free from all bodily defects and mental infirmity, which would in any way disqualify him from performing the duties of a soldier.

C. G. P[illegible], Ass
Surgeon 3 U.S.C. Troops
EXAMINING SURGEON.

I CERTIFY, ON HONOR, That I have minutely inspected the Volunteer, Isaac May previously to his enlistment, and that he was entirely sober when enlisted; that, to the best of my judgment and belief, he is of lawful age; and that, in accepting him as duly qualified to perform the duties of an able-bodied soldier, I have strictly observed the Regulations which govern the recruiting service.—This soldier has black *eyes,* black *hair,* dark *complexion,* is five *feet* five *inches* high.

Capt. Edmund P. Barker
Third *Regiment of* U.S.C.T. *Volunteers,*
RECRUITING OFFICER.

(A. G. O. No. 74 & 76.)

Mustered into the service of the United States, for three years or during the war, from date of enlistment, in Company ___ 3rd Regiment of U.S.C.T. Volunteers, on the 29 day of March 1864 at Jacksonville Fla.

[illegible]
Capt. [illegible]
Mustering Officer

165

Mary Williams

Co E, 3 U.S. Col'd Inf.

Private | Private

CARD NUMBERS.

1	26
2	27
3	28
4 See Williams, Mary	29
5	30
6	31
7	32
8	33
9	34
10	35
11	36
12	37
13	38
14	39
15	40
16	41
17	42
18	43
19	44
20	45
21	46
22	47
23	48
24	49
25	50

Book Mark:

See also

Mayhew, Samuel

Co E, 3 U.S. Col'd Inf.

Private Private

CARD NUMBERS.

1	6257159	26	
2	6257240	27	
3	6257358	28	
4	6258383	29	
5	9060991	30	
6		31	
7		32	
8		33	
9		34	
10		35	
11		36	
12		37	
13		38	
14		39	
15		40	
16		41	
17		42	
18		43	
19		44	
20		45	
21		46	
22		47	
23		48	
24		49	
25		50	

Book Mark:

See also

No. 3 U.S.C.T.

Samuel Mahew

, Co. E, 3 Reg't U. S. Col'd Inf.

Appears on

Company Descriptive Book

of the organization named above.

DESCRIPTION.

Age 18 years; height 5 feet 8 inches.

Complexion —

Eyes —; hair —

Where born —

Occupation —

ENLISTMENT.

When July 6th, 1863.

Where Philad.a Penn.a

By whom Col. Wagner; term 3 y'rs.

Remarks: Died in Beaufort Hospital Sept. 1. 1863 of Wounds.

See: Death No. 1.

B. Springsteen

(383y) Copyist.

NARA 1863

M | 3 | U.S.C.T.

Samuel Mayhew

Priv., Co. E, 3 Reg't U. S. Col'd Infantry.

Age 18 years.

Appears on

Company Muster-in Roll

of the organization named above. Roll dated Phila Pa, Aug 1, 1863.

Muster-in to date July 6, 1863

Joined for duty and enrolled:

When July 6, 1863.

Where Phila Pa

Period 3 years.

Remarks:

Book mark:

S O York

(856) Copyist.

M. | 3 | U.S.C.T.

Samuel Mayhew

Pvt., Co. E, 3 Reg't U. S. Col'd Infantry.

Appears on

Company Muster Roll

for Aug. 1 to 31, 1863.

Present or absent Absent.

Stoppage, $ 100 for

Due Gov't, $ 100 for

Remarks: Wounded on the night of thirteenth of August and in Hospital.

Book mark:

Daggett

(858) Copyist

M | 3 | U.S.C.T.

Samuel Mayhew

Pvt., Co. E, 3 Reg't U. S. Col'd Infantry.

Appears on

Company Muster Roll

for Sept & Oct, 1863.

Present or absent

Stoppage, $ 100 for

Due Gov't, $ 100 for

Remarks: Died in Hospital at Beaufort S.C. Sept 1/63

Book mark: No 80. 660. Met 9. 63

S. P. York

Copyist

(858)

M | 3 | **U.S.C.T.**

Samuel Mayhew

Priv., Co. E, 3 Reg't U. S. Col'd Infantry.

Appears on Co. Muster-out Roll, dated

Jacksonville Fla, Oct 31, 1865.

Muster-out to date ....., 186 .

Last paid to ....., 186 .

Clothing account:

Last settled....., 186 ; drawn since $.....100

Due soldier $.....100; due U. S. $.....100

Am't for cloth'g in kind or money adv'd $.....100

Due U. S. for arms, equipments, &c., $ 100

Bounty paid $.....100; due $.....100

Remarks: Died of wounds+ at Beaufort S. C. Sept 1st 1863. Final statement forwarded to A.G.O. Sept 18th 1863.

Book mark: 80,660.

+ as it appears on roll.

Joseph Stewart

(861) Copyist.

Mayhew, Samuel

Pri., Co. E, 3 Reg't U.S.C. Inf.

3 Enclosures.

Bed Cards	Descriptive Lists
Burial Records /	Final Statements /
Certs. of Dis. for Discharge	Furloughs
C. M. Charges	Med. Des. Lists
Med. Certificates	Orders

Other papers relating to—

Admission to Hosp'l	Furlough
Casualty Sheet ~~(Officer's)~~ /	Med. Examination
Confinement	Misc. Information
Contracts	Pay or Clothing
Death or Effects	Personal Reports
Desertions	Rank
Discharge from Hosp'l	Transfer to Hosp'l
Discharge from Service	Transfer to V. R. C.
Duty	Transportation

NARA1069

CASUALTY SHEET.

No. ....

Samuel Mayhew

Private of Company E.

3 Regiment of U.S. Col. Troops

State Volunteers.

NATURE OF CASUALTY.

~~Died~~ Nov. 10. 1863.

R. W. Roc.

NARA1069

CASUALTY SHEET.

Name: Samuel Mayhew

Rank: Private Company: E. Regiment: 3d

Arm: Col' Troops State: U.S.

Nature of Casualty: Death.

CAUSE OF CASUALTY—(NAME OF DISEASE, &C.)

DEGREE OF DISABILITY.

BY WHOM CERTIFIED.

Report of proceeds of effects & P.M. Rect. A.G.O. to 2d Aud.

DATE OF ~~DISCHARGE~~, ~~DEATH~~, &c.

Nov. 10. 1863

PLACE OF DISCHARGE, DEATH, &c.

BY WHOM DISCHARGED.

FROM WHAT SOURCE THIS INFORMATION WAS OBTAINED.

Mem.! of S.O. Rect. Series Page 192

REMARKS.

Amt. proceeds \$5.45.

(Transmitted as per Rect-book)

A. J. Ball

Clerk.

(119)

6. 8.

14

FINAL STATEMENT

OF

Private Samuel Mayhew

Third Reg't of W. S. Iowa Troops

~~VOLUNTEERS.~~

Died Sept 1-63

NOTE 1.—*Two* of these certificates (or duplicates) are to be given to each volunteer soldier who may be discharged previously to the discharge of his company, that he may at once receive from the Paymaster the pay, &c., due him, and the captain or other officer commanding the company will certify to the act of the delivery of the duplicate certificates; on these certificates the Soldier is "entitled to" his *discharge*, and should also present his discharge to the Paymaster to have the payment endorsed on it. The discharge is to be given back to the Soldier by the Paymaster; the latter only retaining as his voucher the duplicate certificates.

NOTE 2.—If the Soldier is entitled to pay for the use of his horse, the Company Commander will certify to that fact, and also to the time he has pay due for having been so mounted on his own horse.

NOTE 3.—Amounts due the Sutler and Laundress must be entered on the Muster Roll on which the death, desertion, &c., is reported, as well as on the final statement, otherwise the amount cannot be collected from the United States.

NOTE 4.– This blank will be used for deceased volunteers as well as others.

ADJUTANT GENERAL'S OFFICE,

May 11th 1864

Duplicate, with Inventory, sent 2d Auditor.

Entd on A R C

HARR1871

I certify, on honor, that Samuel Mayhew a Private of Captain E P Barker Company (E) of the third Regiment of U S Colored Troops ~~VOLUNTEERS~~, of the State of Pennsylvania, born in Chester County, State of Pennsylvania, aged 18 years; 5 feet 11 inches high; Brown complexion, Dark eyes, dark hair, and by occupation a Farmer, having joined the company on its original organization at Camp William Penn and enrolled in it at the muster into the service of the United States at Philadelphia, on the Sixth day of July, 1863, (~~or~~ was mustered in service as a recruit, by Capt Sargent U S A, at Camp Wm Penn, on the sixth day of July, 1863, to serve in the Regiment,) for the term of three years or during the war: and having served **HONESTLY** and **FAITHFULLY** with his Company in the Department of the South to the date of his death ~~at date~~ is now entitled to a **DISCHARGE** by reason of Death

The said _____ was last paid by Paymaster _____ to include the _____ day of _____, 186 , and has pay due him from that time to the present date; he is entitled to pay and subsistence for **TRAVELING** to place of enrollment and whatever other allowances are authorized to volunteer soldiers, or militia, so discharged. He has received Twenty eight $\frac{77}{100}$ dollars, advanced by the United States on account of **CLOTHING.**

There is to be stopped from him, on account of the State of _____, or other authorities for **CLOTHING**, &c., received on entering service, _____ $\frac{}{100}$ dollars; also, for expenses of SUBSISTENCE for TRAVELING from place of enrollment to the place of rendezvous, amounting to _____ $\frac{}{100}$ dollars: and on account of the United States for **EXTRA CLOTHING** received in kind from _____ and for other stoppages, viz:

_____ amounting to _____ $\frac{}{100}$ dollars; and he has been SUBSISTED for TRAVELING to his place of enrollment, up to the _____, 186 .

He is indebted to _____, **SUTLER**, _____ $\frac{}{100}$ dollars.

He is indebted to _____, **LAUNDRESS**, _____ $\frac{}{100}$ dollars.

Given in Duplicate, at Morris Island, this 12th day of October, 1863.

E P Barker Capt
Commanding Company.

[A. G. O. No. 95.]

Samuel Mayhew
Lt. E. 3d USCS

Mortuary Record of Private Samuel Mayhew, Co E. 3d U.S.C.I.
Deceased at General Hospital No 6. Beaufort S.C. Sept 1st, 1863.

Name & Rank.	Private Samuel Mayhew.
Regt & Company	Co E. 3d U.S. Colored Infantry
Where Deceased	General Hospital No 6. Beaufort S.C.
When	Sept 1st, 1863.
Disease or Injury	Shot through the Pelvis.
Place of Birth	Unknown
Residence	Philadelphia
Married or Single	Single
Effects	None

I certify that the above is a correct transcript from the Records of Hospital No 6.

A. W. Greenleaf
Act Surg 2d S.C. in charge

110

Mayhew, William

Co. C, 3 U.S. Col'd Inf.

Private Private

CARD NUMBERS.

1	6255996	26	
2	6256077	27	
3	6256159	28	
4	6256238	29	
5	6256316	30	
6	6256393	31	
7	6256469	32	
8	6256545	33	
9	6256618	34	
10	6256693	35	
11	6256770	36	
12	6256857	37	
13	6256950	38	
14	6252012	39	
15	6257077	40	
16	9060892	41	
17		42	
18		43	
19		44	
20		45	
21		46	
22		47	
23		48	
24		49	
25		50	

Book Mark:

See also

No. 3 U.S.C.T.

William Mayhew

, Co. D, 3 Reg't U. S. Col'd Inf.

Appears on

Company Descriptive Book

of the organization named above.

DESCRIPTION.

Age 20 years; height 5 feet 8 inches.

Complexion Brown.

Eyes Black; hair Black

Where born Floyd, Ind.

Occupation Cooper

ENLISTMENT.

When July 4th, 1863.

Where Phila. Penn.

By whom Lt. Col. Wagner, term 3 y'rs.

Remarks:

(383y) Copyist.

NARA1076

M | 3 | U.S.C.T.

William Mayhew

Pvt, Co. D, 3 Reg't U. S. Col'd Infantry.

Appears on **Co. Muster-out Roll,** dated

Jacksonville Fla, Oct. 31, 1865.

Muster-out to date ...., 186 .

Last paid to June 30, 1865.

Clothing account:

Last settled ...., 186 ; drawn since $......$\frac{}{100}$

Due soldier $.........$\frac{}{100}$; due U. S. $17 $\frac{74}{100}$

Am't for cloth'g in kind or money adv'd $......$\frac{}{100}$

Due U. S. for arms, equipments, &c., $ 6 $\frac{23}{100}$

Bounty paid $.........$\frac{}{100}$; due $ 100 $\frac{00}{100}$

Remarks: Privat from enlistment. Stoppages for Camp & Garrison Equip. .06 cts Enlisted men discharged to remain in the State according to G.O. No. 10. 1865, Mil Div. of the Gulf. Discharge given will not be paid on this roll.

Book mark: ....

(361) C Kugler Copyist.

M | 3 | U.S.C.T.

William Mayhew

Pvt., Co. D, 3 Reg't U. S. Col'd Infantry.

Age 20 years.

Appears on

Company Muster-in Roll

of the organization named above. Roll dated Philada Pa, July 26, 1863.

Muster-in to date July 4, 1863

Joined for duty and enrolled:

When July 4, 1863.

Where Philadelphia Pa.

Period 3 years.

Remarks:

Book mark:

E. E. Rankin

(356) Copyist.

In | 3 | U.S.C.T.

William Mayhew

Pvt., Co. D, 3 Reg't U. S. Col'd Infantry.

Appears on

Company Muster Roll

for July 26 to Aug. 31, 186 3.

Present or absent Present

Stoppage, $ 100 for

Due Gov't, $ 100 for

Remarks:

Book mark:

E. A. Rankin

Copyist

(358)

M 3 U.S.C.T.

William Mayhew

Pvt., Co. D, 3 Reg't U. S. Col'd Infantry.

Appears on

Company Muster Roll

for Sept. & Oct., 1863.

Present or absent Present.

Stoppage, $ 100 for

Due Gov't, $ 100 for

Remarks:

Book mark:

E. E. Rankin

Copyist

(358)

Pr | 3 | U.S.C.T.

William Mayhew

Pvt., Co. D, 3 Reg't U. S. Col'd Infantry.

Appears on

Company Muster Roll

for Nov. & Dec., 1863.

Present or absent Present

Stoppage, $ 100 for

Due Gov't, $ 100 for

Remarks:

Book mark:

E. A. Rankin

(858) Copyist

M | 3 | U.S.C.T.

William Mayhew

Pvt., Co. D, 3 Reg't U. S. Col'd Infantry.

Appears on

Company Muster Roll

for Jan. & Feb., 1864.

Present or absent Present.

Stoppage, $ 100 for

Due Gov't, $ 100 for

Remarks: Stop for 1 Knapsack & Straps 1 Wiper.

Book mark:

E. E. Rankin,
Copyist

(358)

NARA1082

M | 3 | U.S.C.T.

William Mahew

Pvt, Co. D, 3 Reg't U. S. Col'd Infantry.

Appears on

Company Muster Roll

for Mch & April, 1864.

Present or absent Present

Stoppage, $......100 for ......

Due Gov't, $......100 for ......

Remarks: ......

Book mark: ......

J H Shirley

(358) Copyist

H | 3 | U.S.C.T.

William Mayhew

Pat, Co. D, 3 Reg't U. S. Col'd Infantry.

Appears on

Company Muster Roll

for May June, 186 4.

Present or absent Present

Stoppage, $ 100 for

Due Gov't, $ 100 for

Remarks:

Book mark:

(358) Copyist

M | 3 | U.S.C.T.

William Maghew

Pat, Co. D, 3 Reg't U. S. Col'd Infantry.

Appears on

Company Muster Roll

for July & Aug, 186 4.

Present or absent Present

Stoppage, $ 100 for

Due Gov't, $ 100 for

Remarks: Enrolled April 19/61

Book mark:

(358) Copyist

M | 3 | U.S.C.T.

William Mahew

Pvt, Co. D, 3 Reg't U. S. Col'd Infantry.

Appears on

Company Muster Roll

for Sept & Oct, 1864.

Present or absent Present

Stoppage, $ 100 for

Due Gov't, $ 100 for

Remarks: Free on or before April 19/61

Book mark:

J H Shigley
(358) Copyist

NARA 1085

NARA1086

M | 3 | U.S.C.T.

William Mahew

Pvt, Co. D, 3 Reg't U. S. Col'd Infantry.

Appears on

Company Muster Roll

for Nov & Dec, 1864.

Present or absent Present

Stoppage, $.......100 for

Due Gov't, $.......100 for

Remarks: Stop for 1 Cop Bugle

Free on or before April 19/61

Book mark:

(358) J W Ch[illegible] Copyist

NARA 1097

M | 3 | U.S.C.T.

Wm May Lew

Pvt, Co. D, 3 Reg't U. S. Col'd Infantry.

Appears on

Company Muster Roll

for Jany & Feb, 1865.

Present or absent Present

Stoppage, $ 100 for

Due Gov't, $ 100 for

Remarks: Ptd for 1 Co of Bugler
Free on or before April 19/61

Book mark:

J H Schrisley

(358) Copyist

NARA1088

M. | 3 | U.S.C.T.

William Mayhew

Pvt., Co. D, 3 Reg't U. S. Col'd Infantry.

Appears on

Company Muster Roll

for Mch & Apl, 1865.

Present or absent Present

Stoppage, $ 100 for

Due Gov't, $ 100 for

Remarks: Stop. 1 screw driver 1 wiper, 2 cup tugler 1 letter, 1 number, 1/2 shelter tent.
Free on or before Apl. 19-61.

Book mark:

Kugler
Copyist

(358)

NARA1089

M. | 3 | U.S.C.T.

William Murphew

Pvt, Co. D, 3 Reg't U. S. Col'd Infantry.

Appears on

Company Muster Roll

for May & June, 1865.

Present or absent Present

Stoppage, $ 100 for

Due Gov't, $ 100 for

Remarks: Stop 1 screw

Driver. 1 wiper, 2 cap.

Bugles, 1 Letter, 1 number,

1/2 shelter tent.

Free on or before

Apl. 19-61.

NEXT ROLL ON FILE MUSTER OUT.

Book mark:

Kingsley
Copyist

(358)

M | 3 | U.S.C.T.

William Mayhew

Private, Co. D, 3 Reg't U. S. Col'd Infantry.

Appears on a

Detachment Muster-out Roll

of the organization named above. Roll dated Jacksonville, Fla., Oct. 31, 1865.

Muster-out to date Oct. 31, 1865.

Last paid to June 30, 1865

Clothing account:

Last settled ....., 186 ; drawn since $..... 100

Due soldier $..... 100; due U. S. $ 17 74/100

Am't for cloth'g in kind or money adv'd $..... 100

Due U. S. for arms, equipments, &c., $ 6 23/100

Bounty paid $..... 100 due $ 100 100

Remarks: Stopped for Camp and Garrison 5 cts. Private from Enlistment. Mustered out in obedience to Circular No. 44 War Dept. A. G. O., 1865 G.O. No. 10 Head Qrs. Mil. Division

Book mark:

[Over]

O. J. Markle,

(349) Copyist.

JAN.19 6252012 1891

Gulf 1865 – his services being no longer required.

NARA1092

McCall, Marion

Co C, 3 U.S.Col'd Inf.

Private Private

CARD NUMBERS.

1	6251816	26	
2	6251662	27	
3	6255603	28	
4	6255696	29	
5	6255790	30	
6	6251984	31	
7	6255912	32	
8	9060836	33	
9		34	
10		35	
11		36	
12		37	
13		38	
14		39	
15		40	
16		41	
17		42	
18		43	
19		44	
20		45	
21		46	
22		47	
23		48	
24		49	
25		50	

Book Mark:

See also

M 3 U.S.C.T.

Marion McCall

, Co. C, 3 Reg't U. S. Col'd Inf.

Appears on

Company Descriptive Book

of the organization named above.

DESCRIPTION.

Age 20 years; height 5 feet 1 inches.

Complexion Black

Eyes Black; hair Black

Where born S. C.

Occupation Cook

ENLISTMENT.

When June 19, 1865

Where Nashville

By whom ; term 3 y'rs.

Remarks:

Copyist.

(383g)

M | 3 | U.S.C.T.

Marion McCall

Appears with rank of Pvt. on

Muster and Descriptive Roll of a Detachment of Substitutes forwarded

for the 3 Reg't U. S. Col'd Inf. Roll dated Chelten Hills Pa Camp Wm Penn Feb 10, 1865.

Where born S. Carolina

Age 20 y'rs; occupation Cook

When enlisted , 186 .

Where enlisted

For what period enlisted 3 years.

Eyes Blk ; hair Blk

Complexion Blk ; height 5 ft. 1 in.

When mustered in Jan 19, 1865.

Where mustered in Norristown Pa

Bounty paid $ 100 ; due $ 100

Where credited

Company to which assigned

Remarks: Sub for Addison Morey. Salisbury. 5 Sub Dist. 6 Cong dist.

Book mark:

Sands
Copyist

(339)

N | 3 | **U.S.C.T.**

Marion McCall

Appears with rank of Pvt on

Muster in and Descriptive Roll of a Detachment of Substitutes forwarded

for the 3 Reg't U. S. Col'd Inf. Roll dated

Norristown Pa Jan, 1865.

Where born South Carolina

Age 20 y'rs; occupation Cook

When enlisted Jan 19, 1865.

Where enlisted Norristown Pa

For what period enlisted 3 years.

Eyes Black; hair Black

Complexion Black; height 5 ft. 1 in.

When mustered in Jan 19, 1865.

Where mustered in Norristown Pa

Bounty paid $ 100; due $ 100

Where credited

Company to which assigned C

Remarks: Substitute for Addison Morey, Salisbury. 5-5-

Sub. Dist. 6 Enroll Dist Pa

Book mark:

Davis

(339) *Copyist*

M. | 3 | U.S.C.T.

Morrison McCall

Pvt., Co. C, 3 Reg't U. S. Col'd Infantry.

Appears on

Company Muster Roll

for Mch & Apl, 1865.

Joined for duty and enrolled:

When 19 Jan, 1865.*

Where Monistown *

Period 3 years.*

Present or absent present.

Stoppage, $ 100 for

Due Gov't, $ 100 for

Remarks:

* ☞ See enrollment on card from muster-in roll.

Book mark:

G. E. Dayton

(358c) *Copyist.*

M. | 3. | U.S.C.T.

Marion McCall

Pvt, Co. C, 3 Reg't U. S. Col'd Inf

Appears on

Company Muster Roll

for May & June 1865.

Joined for duty and enrolled:

When 4 Jan, 1865.*

Where Camden NJ *

Period 3 years.*

Present or absent present

Stoppage, $ 100 for

Due Gov't, $ 100 for

Valuation of horse, $ 100

Valuation of horse equipments, $ 100

Remarks:

* ☞ See enrollment on card from muster-in roll.

Book-mark:

G. E. Dayton

(358c) Copyist.

No. 3 U.S.C.T.

Marion McCall

Pvt, Co. C, 3 Reg't U. S. Col'd Infantry.

Appears on

Company Muster Roll

for July + Aug, 1865.

Joined for duty and enrolled:

When 17 Jany, 1865.*

Where Norristown Pa. *

Period 3 years.*

Present or absent present.

Stoppage, $ 23/100 for ordnance

Due Gov't, $ /100 for

Remarks:

* ☞ See enrollment on card from muster-in roll.

Book mark:

G. E. Dayton

(358c) *Copyist.*

Mc | 3 | U.S.C.T.

Marion McCall

Private, Co. C, 3 Reg't U. S. Col'd Infantry.

Appears on a

Detachment Muster-out Roll

of the organization named above. Roll dated Jacksonville, Fla., Oct. 31, 1865.

Muster-out to date Oct. 31, 1865.

Last paid to June 30, 1865

Clothing account:

Last settled ....., 186 ; drawn since $..... 100

Due soldier $..... 100; due U. S. $ 40 68/100

Am't for cloth'g in kind or money adv'd $..... 100

Due U. S. for arms, equipments, &c., $ 6 23/100

Bounty paid $..... 100 due $..... 100

Remarks: Private from Enlistment. Mustered out in obedience to Circular No. 44 War Department A. G. O. 1865, his services being no longer required.

Book mark:

O. J. Markle,

(349) Copyist.

M. | 3 | U.S.C.T.

Marion McCall

Pvt., Co. C, 3 Reg't U. S. Col'd Infantry.

Appears on **Co. Muster-out Roll,** dated Jacksonville Fla. 31 Oct, 1865.

Muster-out to date 31 Oct, 1865.

Last paid to 30 June, 1865.

Clothing account:

Last settled....., 186 ; drawn since $.....100

Due soldier $.....100; due U. S. $ 40 68/100

Am't for cloth'g in kind or money adv'd $.....100

Due U. S. for arms, equipments, &c., $ 6 23/100

Bounty paid $.....100; due $.....100

Remarks: Private from Enlistment Discharged to remain in the State under G.O. No 10 Mil Div of the Gulf. Discharge given. Will not be paid on this roll.

Book mark: Muster out roll (over)

G. E. Dayton

(361) Copyist.

NARA1101

JAN. 19 1891

6255912

on file V. 105 P24-69
836-1882.

1/2

McCaughan, John S.

Field & Staff

Co D, 3 U.S. Col'd Inf.

2d Lieutenant | 1st Lieutenant & Qr. Master

CARD NUMBERS.

1	62535477	26	
2	62521118	27	
3	62521123	28	
4	62521133	29	
5	62521142	30	
6	62521156	31	
7	62521171	32	
8	62521185	33	
9	62521198	34	
10	62522211	35	
11	62522225	36	
12	62522237	37	
13	62522249	38	
14	62522260	39	
15	62522271	40	
16	62522302	41	
17	9428453	42	
18		43	
19		44	
20		45	
21		46	
22		47	
23		48	
24		49	
25		50	

Book Mark: D 179 Vol. 7 C.T. 1868.

See also:

NARA1102

S. 2014397 [illegible]
Al. Ex. Dec. [illegible]
letter J.S. McCaughan
6/20/24
S. to Comm Act. 1/22/25 J. Fl.

Me | 3 | U.S.C.T.

John D. McCaughan

Q.M., Co....., 3 Reg't U. S. Col'd Inf.

Appears on

Regimental Descriptive Book

(List of Commissioned Officers)

of the regiment named above.

Rank Q.M.

Date of appointment July 4 1863.

Remarks: Appd. q.m. July 28, '63, 1st lieut., and mustered, Aug. 1, 1863.

Appd. 2d lieut., July 4, 1863.

(384) Copyist.

M. | 3 | U.S.C.T.

#John S McCaughan

2d Lieut, Co. B, 3 Reg't U. S. Col'd Infantry.

Age 20 years.

Appears on

Company Muster-in Roll

of the organization named above. Roll dated Phil. Pa., Aug. 7, 1863.

Muster-in to date July 10, 1863.

Joined for duty and enrolled:

When July 10, 1863.*

Where Philadelphia Pa.*

Period 3 years.*

Remarks: Mustered out by Capt. Sergeant. Aug. 1. 63.

#Name cancelled by line drawn through it.

*☞ Muster-in roll shows enrollment of all men of this company as of same date and place. See enrollment on subsequent card or cards.

Book mark:

Martin

(356c) Copyist.

M. | 3d Regt. | U.S.C.T.

John S. McCaughan.

Rank 1st Lt. 2nd Mustr, 3 Reg't U. S. Col'd Infantry.

Age 20 years.

Appears on

Field and Staff Muster-in Roll

of the organization named above. Roll dated Philadelphia Pa, Aug 1st, 1863.

Muster-in to date Aug 1, 1863.

Joined for duty and enrolled:

When July 28, 1863.

Where Washington D. C.

Period 3 years.

Valuation of horse, $ 100

Valuation of horse equipments, $ 100

Remarks: Appointment of the Sect of war dated July 28th 1863 and accepted July 30-1863

Book mark:

F. C. Dickerson.

(354)

Copyist.

M. | 3d Regt | U.S.C.T.

John S. McCoughan

Rank 2d Lieut, 3 Reg't U. S. Col'd Infantry.

Appears on

Field and Staff Muster Roll

for Aug. 31, 1863.

Present or absent Present.

Stoppage, $ 100 for

Due Gov't, $ 100 for

Valuation of horse, $ 100

Valuation of horse equipments, $ 100

Remarks: Appointed 2nd Lieut July 4-1863 Appointed 2d Lt. July 28-1863.

Book mark:

F. C. Dickerson.

(357)

Copyist

M. | 3d Regt | U.S.C.T.

John S. McCaughan

Rank Lt Maj, 3 Reg't U. S. Col'd Infantry.

Appears on

Field and Staff Muster Roll

for Sept & Oct, 1863.

Present or absent Present

Stoppage, $ 100 for

Due Gov't, $ 100 for

Valuation of horse, $ 100

Valuation of horse equipments, $ 100

Remarks:

Book mark:

F. C. Dickerson

(357)

Copyist

M. | 3d Regt | U.S.C.T.

John S McCaughan

Rank Lt M, 3 Reg't U. S. Col'd Infantry.

Appears on

Field and Staff Muster Roll

for Nov. & Dec., 1863.

Present or absent Present

Stoppage, $ 100 for

Due Gov't, $ 100 for

Valuation of horse, $ 100

Valuation of horse equipments, $ 100

Remarks: Recd no pay for July - 1863.

Book mark:

F. C. Dickerson.

(357)

Copyist

M. | 3d Regt | U.S.C.T.

John S. McCoyton

Rank 1st Lt & Q. M., 3 Reg't U. S. Col'd Infantry.

Appears on

Field and Staff Muster Roll

for Jan. & Feb, 1864.

Present or absent Absent.

Stoppage, $ 100 for

Due Gov't, $ 100 for

Valuation of horse, $ 100

Valuation of horse equipments, $ 100

Remarks: Absent sick at Hilton Head S. C.

Book mark:

F. C. Dickerson,

(357)

Copyist

M. | 3d Regt. | U.S.C.T.

John S. McCaughan

Rank 1st Lt & 2nd Lt Reg't U. S. Col'd Infantry.

Appears on

Field and Staff Muster Roll

for March & April, 1864.

Present or absent Present

Stoppage, $ 100 for

Due Gov't, $ 100 for

Valuation of horse, $ 100

Valuation of horse equipments, $ 100

Remarks: Pay due as 2d Lieut. from July 10-1863 to July 31-1863.

Book mark:

F. C. Dickerson.

(357)

Copyist

NARA1112

M. | 3d Regt | **U.S.C.T.**

John S. McCaughan.

Rank 1st Lt Qm, 3 Reg't U. S. Col'd Infantry.

Appears on

Field and Staff Muster Roll

for May & June, 1864.

Present or absent Present

Stoppage, $ ______ 100 for ______

Due Gov't, $ ______ 100 for ______

Valuation of horse, $ ______ 100

Valuation of horse equipments, $ ______ 100

Remarks: ______

Book mark: ______

F. C. Dickerson.
Copyist

(357)

M. | 3d Regt. | U.S.C.T.

Jno S. McCaughan

Rank 1st Lt & Q.M., 3 Reg't U. S. Col'd Infantry.

Appears on

Field and Staff Muster Roll

for July & Aug, 1864.

Present or absent Present

Stoppage, $ 100 for

Due Gov't, $ 100 for

Valuation of horse, $ 100

Valuation of horse equipments, $ 100

Remarks:

Book mark:

F. C. Dickerson

(357) Copyist.

M. | 3d Regt | U.S.C.T.

John S. McCaughan

Rank 1st Lt Q.M., 3 Reg't U. S. Col'd Infantry.

Appears on

Field and Staff Muster Roll

for Sept & Oct, 1864.

Present or absent Absent.

Stoppage, $ 100 for

Due Gov't, $ 100 for

Valuation of horse, $ 100

Valuation of horse equipments, $ 100

Remarks: Absent with leave for 30 days S.O. No 366. D. F. Oct. 18-1864.

Book mark:

F. C. Dickerson.

(357) Copyist.

M. | 3d Regt | U.S.C.T.

Jno S. McCaughan.

Rank 1st Lieut R. I. M. 2, 3 Reg't U. S. Col'd Infantry.

Appears on

Field and Staff Muster Roll

for Nov. & Dec, 1864.

Present or absent Present.

Stoppage, $.....100 for.....

.....

Due Gov't, $.....100 for.....

.....

Valuation of horse, $.....100

Valuation of horse equipments, $.....100

Remarks:.....

.....

.....

.....

.....

.....

.....

.....

.....

Book mark:.....

F. C. Dickerson.

(857)

Copyist

M. | 3d Regt | U.S.C.T.

John S McCaughan.

Rank 1st Lt, 3 Reg't U. S. Col'd Infantry.

Appears on

Field and Staff Muster Roll

for Jan. & Feb, 1865.

Present or absent Present

Stoppage, $ 100 for

Due Gov't, $ 100 for

Valuation of horse, $ 100

Valuation of horse equipments, $ 100

Remarks:

Book mark:

F. C. Dickerson,

(357) Copyist

NARA1117

M. | 3d. Regt | **U.S.C.T.**

John S. McCaughan.

Rank 1st Lieut Regtl Adjt., 3 Reg't U. S. Col'd Infantry.

Appears on

Field and Staff Muster Roll

for March & April, 1865.

Present or absent Present.

Stoppage, $ .... 100 for ....

Due Gov't, $ .... 100 for ....

Valuation of horse, $ 100

Valuation of horse equipments, $ 100

Remarks: ....

Book mark: ....

F. C. Dickerson,

(357) Copyist

M. | 3d Regt. | U.S.C.T.

Jno. S. McCaughan.

Rank 2d Lt., 3 Reg't U. S. Col'd Infantry.

Appears on

Field and Staff Muster Roll

for May & June, 1865.

Present or absent Absent.

Stoppage, $.....100 for.....

Due Gov't, $.....100 for.....

Valuation of horse, $.....100

Valuation of horse equipments, $.....100

Remarks: On duty at Tallahassee. Fla. S. O. No 94, D. F. May. 20th 65.

Book mark:

F. C. Dickerson.

(357)

Copyist

M. | 3d Regt. | U.S.C.T.

John S. McCaughan

Rank 1st Lt. & Q.M., 3 Reg't U. S. Col'd Infantry.

Appears on

Field and Staff Muster Roll

for July & August, 1865.

Present or absent Absent.

Stoppage, $ 100 for

Due Gov't, $ 100 for

Valuation of horse, $ 100

Valuation of horse equipments, $ 100

Remarks: Absent on sick leave since Aug 8th 1865.

Book mark:

F. C. Dickerson,

(357)

Copyist.

MARA1129

M. | 3rd Regt. | U.S.C.T.

John S. McCaughan.

Rank 1st Lt 2r M., 3 Reg't U. S. Col'd Inf.

Appears on

Field and Staff Muster-out Roll

of the organization named above. Roll dated

Jacksonville Fla Oct 31, 1865.

Muster-out to date ...., 186 .

Last paid to ...., 186 .

Clothing account:

Last settled ...., 186 ; drawn since $......100

Due soldier $............100; due U. S. $............100

Am't for cloth'g in kind or money adv'd $......100

Due U. S. for arms, equipments, &c., $ 100

Bounty paid $............100; due $............100

Remarks: Discharged for disability per S.O. 461 A.G.O. Aug 26th. 1865.

Book mark: D. 179. Vol. 7 C. T. 1868

F. C. Dickerson.
Copyist.

(360)

NARA1121

McCaughan, John S.

+ R. Q. M.

1 Lt, Co. , Reg't

13 Enclosures.

Bed Cards	Final Statements
Burial Records	Furloughs or L. of A
Certs. of Dis. for Discharge	Med. Certificates 6
C. M. Charges	Med. Des. Lists
Descriptive Lists	Orders 1
Discharge Certificates	Pris. of War Record
Enlistment Papers	Resignations 2

Other papers relating to—

Admission to Hosp'l	Furlough or L. of A ✓
Casualty Sheet	Med. Examination
Confinement	Misc. Information 2
Contracts	Pay or Clothing
Death or Effects	Personal Reports
Desertion	Rank
Discharge from Hosp'l	Transfer to Hosp'l
Discharge from Service	Transfer to V. R. C.
Duty	Transportation

MARA1122

John J. Mc Caughan was mustered in as 1st Lieut and Regtl Qr mr. 3d Regt U. S. C. T. Augt 1863. On Return of that Regt for the month of May 1865 (latest on file) he is reported "Acting Regl Qr. mr. at Baldwin"

Strength Com'd — 32
" Enlisted — 910 W.A.

599

B 370 M (CS) 1864

Jacksonville Florida
October 4th 1864

McCaughan John S. Lieut.
& R. Q. M. 3rd U.S.C.T.

Respectfully requests Leave of Absence for thirty days on account of Physical Disability (Orig. enclosures)

Head Qurs. 3rd U.S.C.T.
Jacksonville Florida
October 4th 1864

Approved and Respy. forwarded
B. C. Tilghman
Col. 3rd U.S.C.T.

Headquarters, District of Fla.,
Fourth Separate Brigade, D. S.
Jacksonville, Oct. 5th 1864.

Respectfully referred to Dr. H. O. Marcy Chief Medical Officer for the action of the examining board.

By command of
Brig.-Genl. Jno. P. Hatch
Thorndike D. Hodges
Capt. & A. A. G.

Recd. H. D. F. Oct. 4/64

Office of Med. Off.
B. 370 M. (CS) 1864 Gen.

Respctly Forwarded approved attention called to enclosed certificate of U S Med Ex Board.

H. O. Marcy
Surg. U.S.C.T.
Chf Med Off D.F.

Headquarters, District of Fla.,
Fourth Separate Brigade, D. S.
Jacksonville, Oct. 7th 1864.

Respectfully forwarded, Approved.

Jno. P. Hatch
Brig. Gen. Comd'g.

HEADQUARTERS, Dept of the South
H Bpenspot
Hilton Head, S.C. Oct 11th 1864

Respectfully referred to the Act. Med. Director D.S. for recommendation

By Command of
Maj. Gen. J. G. Foster
W. L. M. Burger
Asst. Adj. Gen.

OCT 16 1864 DEPT. SOUTH

E.B. M.D.O. D.S. 219. B.
OFFICE MEDICAL DIRECT. Dept. of the South
Hilton Head, S.C. Oct 18th 1864

Respectfully returned to Hd. Qrs. D.S. The lenght of time during which this Diarrhoea has existed the present condition of this Officer & the uncertainty of his recovery according to the Surgeons Certificate render this case one for resignation more then for leave of absence, in view of the seeming emergency of the case however, it is recommended that this leave of absence be granted provided this Officer immediatly tenders his resignation with the necessary Med Certificates thereto attached.

W. R. Ramsey
Asst. Surg. U.S.A.
Act. Med. Dir. D.S.

See SO 366. Par II 3d dug Oct 18 1864

Jacksonville Florida
October 4th 1864.

Captain:

I have the honor to request "Leave of Absence" for thirty days, on account of physical disability: your attention is respectfully invited to the enclosed "Surgeons certificate of disability".

I have the honor to be very respectfully
Your Most Obedient Servant
John S. McCaughan
1st Lieut. & R.Q.M. 3rd U.S.C.T.

Captain
W. S. M. Burger
A. A. G. Dept. the South.

Office Surgeon
3d Regt. U.S.C.T.
Jacksonville Fla
Oct. 4th 1864

A. M. Barnes
Surgeon
3d U.S.C.T.

Certificate of Disability in the case of I. S. McCaughan
1st Lieut & Reg. Qr. M. 3d U.S.C.T.

PB. 370 m (01) 1864

1st Sergt and Regimental Qr Master, John S. McCaughan of the 3d Regt. of the U. S. Colored Troops having applied for a certificate upon which to ground an application for leave of absence. I do hereby certify that I have carefully examined this Officer and find that he has been suffering from Chronic Diarrhoea for the past Ten Months and that in consequence thereof he is in my opinion unfit for duty. I further declare my belief that the prospect of his recovery is distant and uncertain and that a change of climate, to one at least Ten degrees north of this latitude is indispensable to save his life.

Dated at Jacksonville Fla this 4th day of October 1864

Alonzo M. Barnes
Surgeon
3d Regt. U.S.C.T.

NARA1127

8B370. M(IIS) 1864

Oct 44

NARA1128

Office U.S.A. Med. Ex. Board Dist. F.
Jacksonville Fla. Oct. 7. 1864

At a regular meeting of the board the case of 1st Lieut and R.Q.M. 3d USCT came before us. he having applied for leave of absence to go north on Surg Certificate. We learn that he was first taken ill with Remittent Fever in Nov. 1863, on Morris Island S.C. Somewhat later was taken with Diarrhoea which soon assumed a chronic type. During the months of Feb. & March 1864 was in Hospital at Hilton Head. Rejoined his reg. in April but was little improved. The diarrhoea has continued with brief intermissions until the present. He has now great loss of flesh & strength, and very frequent dejections not controlled by medicine. Believing it necessary that he go North for recovery, we recommend that leave of absence be granted.

H. O. Marcy Surg 35 USCT.
Pres USA Med Ex board Dist Fla.

A. Greenleaf
Asst Surg 34 U.S.C.T.
Recorder Med. Ex Board

NARA1129

Certificate for leave of absence on account of Sickness.

1st Lieut J. H. McCaughan R. Q. M. of the 3d Regiment U.S.C.T.

having applied for a certificate of Leave of Absence

I do hereby certify that I have carefully examined this Officer and find that he is Suffering from Chronic Diarrhoea Contracted [illegible] 1864 in the line of duty

and that in consequence thereof he is, in my opinion unfit for duty and not able to travel. I further declare my belief that he will not be able to resume his duties in a less period.

Twenty days (20)

Prospect of recovery Good

Dated at Pittsburgh Pa this 18th day of November 1864.

James Bryan

SURGEON U. S. Vol's.
In Charge of Hospital.

M 116 R.C.T. 1864.

Mansfield, Penn.
M. 73. N. [illegible] Jan. 18 / 1864.

McCaughan John S.
Lieut. & R.Q.M. 3d U.S.C.T.

Forwards Surgeons Certificate of Disability to account for continued absence from Regt.

(1 Enc)

Chg. Col. Foster

Rec'd. A.G.O. Nov 22d/64

Mansfield Penna.
Nov. 18th '64.

John S. McCaughan Lieut.
& R. Q. M. 3rd U. S. C. T.
respectfully transmits
"Certificate of disability."

(1 Enc.)

Rec'd Adj. Nov. 21/64

Mansfield Penna.
Nov. 18th 64

General:

Enclosed I have the honor to transmit Surgeons "Certificate for leave of absence on account of sickness".

I have the honor to be very respectfully
Your Most Obedient Servant
John S. McCaughan
Lieut. & R.Q.M. 3rd U.S.C.T.

General L. Thomas
A. G. U. S. A.

F. 17. D. Pro. Office
Tallahassee Fla
July 17th 1865

McCaughan J S Lieut &
R.Q.M 3rd U.S. C T rstd Qrk

Respectfully requests Leave of Absence on account of Physical disability

Hd Qrs Post
Tallahassee Fla
July 17th 1865
Respectfully forwarded
approved
James Miller
Capt 7th U.S. Infty
Comdg Post

(One enclosure.)

Recd Hd Qr Dept of Fla, Tallahassee, July 20/65.

NARA1134

Qr. Mrs Office
Tallahassee Florida:
July 17th 1865

Lieut. A. C. Pretz
A. A. A. G.

Sir

I respectfully request Leave of Absence for thirty days on account of Physical disability.
I have the honor to be Very Respectfully
Your Obedient Servant
John S. McCaughan
Lieut. & Regl. 3rd U.S.C. T. Adjt.

Qr Mrs Office
M 100 C.T. Rec'd Vol. 1 Eng. Dpt.
July 17th 65

McCaughan J. S. Lieut
& R.Q.M. 3rd U.S.C. T. & A.Q.M.

Respectfully tenders his resignation

Hd. Qrs Post
Tallahassee Fla
July 17th 1865
Respectfully forwarded
Approved
James Curry
Capt 7th U S Inft
Comdg Post

(One enclosure)
(two enclosures)

Rec'd H. Q. Dep't of Fla., Tallahassee, July 20 '65.

Head Quarters
Dept. of Florida
Tallahassee
August 4th 1865

Respectfully forwarded
Approved
John Newton
Maj Genl
Comdg

NARA1136

Qr Mrs Office
Tallahassee Fla
July 17th 1865

Colonel

I here by respectfully tender my resignation as 1st Lieut & R Q M 3rd U S C T on account of Physical disability to perform duty in this climate

I have the honor to be Very Respectfully Your Obedient Servant
John S. McCaughan
Lieut & R Q M 3rd U S C T & A A Q M

To
Bvt Col C. W. Foster
A. A. G Chief of Bureau of Col Tp
Washington D.C

Direct reply to me at Wintersett
Madison County
Iowa

Tallahassee Fla.
July 18th 1865

Porter Watson
Act. Lieut. 3rd U.S.C.T.

Certificate of disability
of John S. McCaughan
Lieut. & R.Q.M. 3rd U.S.C.T.

No. 1. 2. Dept of Fla., Tallahassee, July 20/65.

NARA 1138

1st Lieut John S. McLaughlin Quartermaster 3d U.S.C.T. having applied for a certificate on which to ground an application for leave of absence I do certify that I have carefully examined this officer and find that he is suffering from Chronic Diarrhoea which he has had for more than twelve months. He is very much debilitated from the effects of the disease and in consequence thereof he is in my opinion unfit for duty

I further declare my belief that the prospect of his recovery is distant and uncertain and that a change of climate is indispensable to save life

I would respectfully urge that permission be granted him to visit the North

Dated at Tallahassee Fla. July 18th 1865

Watson Porter
Asst. Surg. 3d U.S.C.T.

July, 65

Rec'd H. L. Dept of Fla., Tallahassee July 20/65.

1st Lieut John S. McCaughn Quartermaster 3d U.S.C.T. having applied for a certificate of disability — I do hereby certify that I have carefully examined this Officer and find that he has been suffering for more than twelve months from Chronic Diarrhoea and in consequence thereof he is in my opinion unfit for duty I further declare my belief that the prospect of his recovery is distant and in this Climate very uncertain

I would respectfully urge that his resignation be accepted.

Dated at Tallahassee Fla. this 18th July 1865.

Watson Porter
Asst. Surg. 3d U.S.C.T.

Med Examining Board
Post of Jacksonville
Aug 7th 1865

Alonzo M. Barnes
Surgeon U.S.C.T.
Recorder

Proceedings of Med. Ex. Board
in the case of Lieut. J. S. McCaughan

At a meeting of the Medical Examining Board for the Post of Jacksonville held at Jacksonville Fla August 1st 1865, the case of Lieut John S. McCaughan Quartermaster 3d Regt. U.S.C. Troops was presented.
The board find that this officer has been suffering for the past 12 months with Chronic Diarrhoea, which has resisted treatment, until he has become debilitated to such an extent as to render him unfit for duty.

In view of the fact that the prospect of his recovery is distant and uncertain, the board recommend that his resignation as an officer in the service of the United States be accepted.

Alonzo M. Barnes
Surgeon 3d U.S.C.T.
Recorder.

J. M. Applegate
Surg. USA. President

HARA1143

M.100 C.T. R.B. 1865.

Philadelphia, Pa.
August 22. 65.

John J. McLaughan
Lieut. R.Q.M. 3d W. Cav.

Tenders his resignation

3 Enclosures

Vol. Resign. ap. or.
No 46 R. of A. Aug.
26th 65. A.G.O.

Recd A.G.O. Aug 24. 65

HARR1144

Philadelphia Penna
August 22nd 1865.

Colonel:

Enclosed I have the honor to transmit my Resignation supported by medical certificates and approved by Department Boards. I am very ill and have been granted "Leave of absence" on that account, I therefore respectfully request that my resignation be accepted without delay. Please send reply to me at "Winterset, Madison County, Iowa"

Very respectfully Your Obt. Servt.
John S. McCaughan
Lieut. & R. Q. M. 3rd U. S. C. T.

Col. C. H. Foster
A. A. G.

War Dept. Adjt General's Office
Washington Aug 26. 1865

Special Order
No # 461

Discharges Jno S. McCaughan
1st Lieut - R.Q.M. 5th U.S.C.T.

NARA 146

War Department
Adjutant General's Office
Washington Aug 26th 1865

Special Order
No. 461

{Extract}

x x x

34. The following named Officers, having tendered their resignations, are hereby honorably discharged the Service of the United States, on account of physical disability, with the condition that they shall receive no final payments, until they have satisfied the Pay Department that they are not indebted to the Government

1st Lieutenant and Regimental Quartermaster John S. McCaughan 3d U.S. Colored Troops.

x x x

Official
E. D. Townsend (signed)
Assistant Adjutant Genl

By Order of the Secretary of War
(signed) E. D. Townsend
Assistant Adjutant Genl

Official
L. McHenry
Capt & A. A. Genl.

NARA1147

McCullough, John A

Co. A, 3 U.S. Col'd Inf.

Private | Private

CARD NUMBERS.

1	6252367	26	
2	6252444	27	
3	6252529	28	
4	6252605	29	
5	6252681	30	
6	6252757	31	
7	6252831	32	
8	6252907	33	
9	6252980	34	
10	6253054	35	
11	6253131	36	
12	6253217	37	
13	6253307	38	
14	6253483	39	
15	6253528	40	
16	9060591	41	
17		42	
18		43	
19		44	
20		45	
21		46	
22		47	
23		48	
24		49	
25		50	

Book Mark:

See also

Mg 3 | U.S.C.T.

John H. McCullough

, Co. A, 3 Reg't U. S. Col'd Inf.

Appears on

Company Descriptive Book

of the organization named above.

DESCRIPTION.

Age 20 years; height 5 feet 7¼ inches.

Complexion Black

Eyes Black; hair Black

Where born West Chester Penna

Occupation Laborer

ENLISTMENT.

When June 26, 1863

Where Phila Pa

By whom Lt Col Wagner; term 3 y'rs.

Remarks:

Houston

(383g) Copyist.

M | 3 | U.S.C.T.

John H. McCullough

Pvt., Co. A, 3 Reg't U. S. Col'd Infantry.

Age 20 years.

Appears on

Company Muster-in Roll

of the organization named above. Roll dated Phila. Pa., Aug. 3, 1863.

Muster-in to date June 26, 1863.

Joined for duty and enrolled:

When June 26, 1863.*

Where Phila. Pa. *

Period 3 years.*

Remarks:

*☞ Muster-in roll shows enrollment of all men of this company as of same date and place. See enrollment on subsequent card or cards.

Book mark:

(356c) J. A. Boyd Copyist.

Mc | 3 | U.S.C.T.

J. H. McCullough

Corpl., Co. A. 3 Reg't U. S. Col'd Infantry.

Appears on

Company Muster Roll

for Aug. 3 to Aug 31, 1863.

Joined for duty and enrolled:

When June 26, 186 .*

Where Phila. Pa. *

Period 3 years.*

Present or absent Present

Stoppage, $ 100 for

Due Gov't $ 100 for

Remarks: Canteen due U. S. 44¢.

* See enrollment on card from muster-in roll.

Book mark:

J. A. Boyd

(358c) Copyist.

Mc | 3 | U.S.C.T.

John H. McCullough
Pvt., Co. A. 3 Reg't U. S. Col'd Infantry.

Appears on

Company Muster Roll

for Sept & Oct, 1863.

Joined for duty and enrolled:

When June 26, 186 .*

Where Phila. Pa. *

Period 3 years.*

Present or absent Present

Stoppage, $ 100 for

Due Gov't $ 100 for

Remarks: Due U.S. 1 bayonet & scabbard.

* ☞ See enrollment on card from muster-in roll.

Book mark:

(358c) I. A. Boyd
Copyist.

Mc | 3 | U.S.C.T.

John H. McCullough

Private, Co. A. 3 Reg't U. S. Col'd Infantry.

Appears on

Company Muster Roll

for Nov & Dec, 1863.

Joined for duty and enrolled:

When June 26, 186 .*

Where Phila. Pa. *

Period 3 years.*

Present or absent Present

Stoppage, $ 100 for

Due Gov't $ 100 for

Remarks:

* ☞ See enrollment on card from muster-in roll.

Book mark:

(358c) Jas Boyd *Copyist.*

Mc | 3 | U.S.C.T.

John H. McCullough

Corpl., Co. A. 3 Reg't U. S. Col'd Infantry.

Appears on

Company Muster Roll

for Jany & Feby, 1864.

Joined for duty and enrolled:

When June 26, 1863.*

Where Phila. Pa. *

Period 3 years.*

Present or absent Absent

Stoppage, $ 100 for

Due Gov't $ 100 for

Remarks: Absent sick at Hilton Head, S.C. Feby. 7, 1864.

* ☞ See enrollment on card from muster-in roll.

Book mark:

(358c) J. A. Boyd

Copyist.

Mc | 3 | U.S.C.T.

John H. McCullough

Pvt., Co. A. 3 Reg't U. S. Col'd Infantry.

Appears on

Company Muster Roll

for March and April, 1864.

Joined for duty and enrolled:

When June 26, 1863.*

Where Phila. Pa. *

Period 3 years.*

Present or absent Present

Stoppage, $ 100 for

Due Gov't $ 100 for

Remarks: Stop 1 Haversack 1 Canteen.

* ☞ See enrollment on card from muster-in roll.

Book mark:

(358c) J. Boyd

Copyist.

M | 3 | U.S.C.T.

John H. McCullough

Pvt, Co. A. 3 Reg't U. S. Col'd Infantry.

Appears on

Company Muster Roll

for May & June, 1864.

Joined for duty and enrolled:

When June 26", 1863.*

Where Philad. Pa.,*

Period 3 years.*

Present or absent Present.

Stoppage, $ 100 for

Due Gov't $ 100 for

Remarks Stop 1 Painted Haversack, 2 Canteens,

* ☞ See enrollment on card from muster-in roll.

Book mark:

(358c)

Copyist.

Mc | 3 | U.S.C.T.

John H. McCullough

Pvt, Co. A. 3 Reg't U. S. Col'd Infantry.

Appears on

Company Muster Roll

for July & Aug, 1864

Joined for duty and enrolled:

When June 26, 1863.*

Where Phila Pa *

Period 3 years.*

Present or absent Present

Stoppage, $ 100 for

Due Gov't $ 100 for

Remarks: Free on or before April 19. 1861. Stop 1 Painted Haversack. 2 Canteens 1.15/100 dolls.

* See enrollment on card from muster-in roll.

Book mark:

S. Duncan
Copyist.

(358c)

Mc. | 3 | U.S.C.T.

John H. McCullough,
Private, Co. A. 3 Reg't U. S. Col'd Infantry.

Appears on

Company Muster Roll

for Sept. & Oct., 1864.

Joined for duty and enrolled:

When June 26, 1863.*

Where Phila., Pa.*

Period 3 years.*

Present or absent Present.

Stoppage, $ 100 for

Due Gov't $ 100 for

Remarks: Paid seven dollars per month from enlistment to dec. 31, 1863. Back pay due. Stop one private's waist-belt, one W. B. plate, one wiper, one screw driver and one worm. (over.)

* See enrollment on card from muster-in roll.

Book mark:

E. H. Woodford
Copyist.

(358c)

JAN. 19 6252980 1891

one cap pouch, and one
bayonet scabbard.
Free on or before Apr. 19, 1861.

Mo 3 **U.S.C.T.**

John H. McCullough

Privt., Co. A. 3 Reg't U. S. Col'd Infantry.

Appears on

Company Muster Roll

for Nov & Dec, 1864.

Joined for duty and enrolled:

When June 26th, 1863.*

Where Phila Pa.*

Period 3 years.*

Present or absent present.

Stoppage, $ 100 for

Due Gov't $ 100 for

Remarks: Stop. one W. Belt and W. Belt plate, one Musket, one Screw driver and cam wrench, one Cap Pouch, one Bayonet Scabbard and one painted Haversack. (Over)

* See enrollment on card from muster-in roll.

Book mark:

J. M. Round

(358c) Copyist.

NARA1160

JAN. 19 6253054 1891

Paid Seven dollars per
month and back pay due
from June 26/63, to Dec 31/63.
Free man before Apr 19, 1861

Mc 3 U.S.C.T.

John H. McCollough

Pvt., Co. A. 3 Reg't U. S. Col'd Infantry.

Appears on

Company Muster Roll

for Jan & Feb, 1865.

Joined for duty and enrolled:

When June 26th, 1863.*

Where Philad. Pa.*

Period 3 years.*

Present or absent present

Stoppage, $ 100 for

Due Gov't $ 100 for

Remarks: Stops one W. Belt one W. B. Plate, one Wiper, one Screw Driver and one wrench, one Cap Pouch, one Bayonet Scabbard, one painted Haversack, and one Canteen, Paid seven dollars per month (over)

* See enrollment on card from muster-in roll.

Book mark:

G. M. Rowe

(358c) Copyist.

JAN. 19 6253131 ☆1891☆

and Back Pay due from
June 26' 1863. to Dec 31' 1863
Free on or before Apr. 19,
1861,

NARA1163

Mc | 3 | U.S.C.T.

John H. McCullough

Pvt, Co. A. 3 Reg't U. S. Col'd Infantry.

Appears on

Company Muster Roll

for March & April, 1865.

Joined for duty and enrolled:

When June 26, 1863.*

Where Phila, Pa *

Period 3 years.*

Present or absent Present

Stoppage, $ 100 for

Due Gov't $ 100 for

Remarks: Stop one W. Belt, one W. B. Plate, one Cap pouch, one bayonet scabbard, S. R. M. Two screw drivers & Cone wrenches one wiper, one painted Haversack and one Canteen. (over)

* See enrollment on card from muster-in roll.

Book mark:

J. L. Norris
Copyist.

(358c)

MARM 164

99

JAN. 19
6253217
☆1891☆

Pay on or before April 19. 1861.

NARA 1165

Mc | 3 | U.S.C.T.

John H. McCullough

Pvt, Co. A. 3 Reg't U. S. Col'd Infantry.

Appears on

Company Muster Roll

for May & June, 1865.

Joined for duty and enrolled:

When June 26, 1863.*

Where Phila, Pa *

Period 3 years.*

Present or absent Present

Stoppage, $ 100 for

Due Gov't $ 100 for

Remarks: Stop one wiper, one W.B. Plate, one Cap pouch, one bayonet scabbard S.R.M. two cone wrenches one W. belt, one painted Haversack, two canteens and one half S. Tent (over)

* See enrollment on card from muster-in roll.

Book mark:

J. L. Norris
Copyist.

(358c)

NARA1166

JAN. 19 6253307 1891

Free on or before April 19. 1861.

Mc | 3 | U.S.C.T.

John H. McCullough

Pvt, Co. A. 3 Reg't U. S. Col'd Infantry.

Appears on

Company Muster Roll

for July & August, 1865.

Joined for duty and enrolled:

When June 26, 1863.*

Where Phila, Pa *

Period 3 years.*

Present or absent Present

Stoppage, $ 23/100 for Ordnance

Due Gov't $ 8 75/100 for C & G Equipage

Remarks:

* ☞ See enrollment on card from muster-in roll.

Book mark:

(358c) J. L. Morris

Copyist.

Mc. | 3 | U.S.C.T.

John H. McCullough

Pvt., Co. A, 3 Reg't U. S. Col'd Infantry.

Appears on **Co. Muster-out Roll,** dated Jacksonville, Fla, Oct. 31, 1865.

Muster-out to date ....., 186 .

Last paid to ....., 186 .

Clothing account:

Last settled....., 186 ; drawn since $.....100

Due soldier $.....100; due U. S. $.....100

Am't for cloth'g in kind or money adv'd $.....100

Due U. S. for arms, equipments, &c., $.....100

Bounty paid $.....100; due $.....100

Remarks: Discharged at Jacksonville, Fla, on Surgeon's Cert. of disab. Oct 11. 65. Final Statements given.

Book mark: 3098. P.M.G. Apl 18/66.
244.046

J. L. Morris

(361) Copyist.

McCullough, John H.

Pri, Co. a, 3 Reg't U.S.C. Inf.

1 Enclosures.

Bed Cards	Descriptive Lists
Burial Records	Final Statements
Certs. of Dis. for Discharge 1	Furloughs
C. M. Charges	Med. Des. Lists
Med. Certificates	Orders

Other papers relating to—

Admission to Hosp'l	Furlough
Casualty Sheet (Officer's)	Med. Examination
Confinement	Misc. Information
Contracts	Pay or Clothing
Death or Effects	Personal Reports
Desertions	Rank
Discharge from Hosp'l	Transfer to Hosp'l
Discharge from Service	Transfer to V. R. C.
Duty	Transportation

No. 11. R. of Dis. 35

1865

CERTIFICATE OF DISABILITY FOR DISCHARGE

IN THE CASE OF

John H. McCullough

a private Co. A.

Third Reg't of U.S. C.T.

Head-Quarters. Department of Florida
Medical. Director's Office.
Tallahassee Sept 20/65

Approved.

Alex B. Hasson

Surgeon. U. S. Army.
Medical-Director.

HdQrs Dept of Florida
Septbr 29. 1865

To be discharged
By Command of
Maj Genl Foster
Chas Mundee
Asst Adjt Genl

Received (A. G. Office.) ...., 186

RECEIVED NOV 2 1865 ADJUTANT GEN'LS OFFICE

Ew on. C.R. of Cas.

NARA1171

ARMY OF THE UNITED STATES.

CERTIFICATE OF DISABILITY FOR DISCHARGE

Private John H. McCullough of Captain George D. Harts Company, (A.) of the Third Regiment of the United States Cold Troops was enlisted by Lieut Col. Waggner of the 88th Regiment of Pa. Vols at Philadelphia, Pa. on the 26th day of June, 1863, to serve 3 years; he was born in Westchester in the State of Pennsylvania, is 20 years of age, 5 feet 7 1/2 inches high, black complexion, black eyes, black hair, and by occupation when enlisted a Laborer. During the last two months said soldier has been unfit for duty 60 days.* He is subject to fits contracted since he entered the service while in the regular channel of duty. I deem it unsafe to trust him with anything.

STATION: Jacksonville Fla
DATE: Sept. 11th 1865

William E. Capua
2nd Lieut 3d U.S.C.T.
Commanding Company.

I CERTIFY, that I have carefully examined the said J. H. McCullough of Captain Geo. D. Harts Company, and find him incapable of performing the duties of a soldier because of† Epilepsy. The seizures occurring as often as twice weekly. His disability has been contracted since his enlistment. The degree of disability is one third (1/3). He is unfitted for all soldierly duties. This is a probable case for pension. This man is unfitted for the Veteran Reserve Corps by reason of the above disability.

A. M. Barnes
Surgeon. 3d U.S.C.T.

DISCHARGED, this Eleventh day of October, 1865, at Gainesville Fla.

J. L. Brower
Lieut Col. 3d U.S.C.T.
Commanding the Reg't.

The *Soldier* desires to be *addressed* at

Town.................... *County*.................... *State*....................

*See Note 1 on the back of this. † See Note 2 on the back of this.

[A. G. O., No. 100 & 101—First.] [DUPLICATES.]

NARA1172

117

McCune, George

Co H, 3 U.S. Col'd Inf.

Private | Private

CARD NUMBERS.

1	6260761	26	
2	6260922	27	
3	6261004	28	
4	6261084	29	
5	6261163	30	
6	6261240	31	
7	6261314	32	
8	6261388	33	
9	6261466	34	
10	6261543	35	
11	6261628	36	
12	6261722	37	
13	6261813	38	
14	9061320	39	
15		40	
16		41	
17		42	
18		43	
19		44	
20		45	
21		46	
22		47	
23		48	
24		49	
25		50	

Book Mark:

See also

NARA1173

Mc | 3 | U.S.C.T.

George McCune

............, Co. H, 3 Reg't U. S. Col'd Inf.

Appears on

Company Descriptive Book

of the organization named above.

DESCRIPTION.

Age 53 years; height 5 feet 3 inches.

Complexion Black

Eyes Black; hair Black

Where born "Unknown" Ky.

Occupation Farmer

ENLISTMENT.

When July 17, 1863.

Where Philada Penn,

By whom Lt Col Wagner; term 3 y'rs.

Remarks:

Daggett
Copyist.

(383g)

Mc | 3 | U.S.C.T.

George McBurne

Pri, Co. H, 3 Reg't U. S. Col'd Infantry.

Age 33 years.

Appears on

Company Muster-in Roll

of the organization named above. Roll dated Philadelphia Pa July 25, 1863.

Muster-in to date July 17, 1863

Joined for duty and enrolled:

When July 17, 1863.

Where Philadelphia Pa

Period 3 years.

Remarks:

Book mark:

O J Smith

Copyist.

(856)

NARA1175

Mc | 3 | U.S.C.T.

George McCune

Pri, Co. H, 3 Reg't U. S. Col'd Infantry.

Appears on

Company Muster Roll

for July 25 to Aug 31, 1863.

Present or absent Present.

Stoppage, $ ____ 100 for ____

Due Gov't, $ ____ 100 for ____

Remarks: ____

Book mark: ____

C Y Smith

(358) Copyist

Mc | 3 | U.S.C.T.

George McBurns

Pri, Co. H, 3 Reg't U. S. Col'd Infantry.

Appears on

Company Muster Roll

for Sept & Oct, 1863.

Present or absent Present

Stoppage, $ 100 for

Due Gov't, $ 100 for

Remarks: To be stopped one (1) Canteen

Book mark:

O G Smith

Copyist

(358)

NARA1177

Mc	3	U.S.C.T.

George McCune

Pri, Co. H, 3 Reg't U. S. Col'd Infantry.

Appears on

Company Muster Roll

for Nov & Dec, 1863.

Present or absent Present

Stoppage, $ ___ 100 for ___

Due Gov't, $ ___ 100 for ___

Remarks: ___

Book mark: ___

C G Smith
Copyist

(858)

Mc | 3 | U.S.C.T.

George McCune

Pri, Co. H, 3 Reg't U. S. Col'd Infantry.

Appears on

Company Muster Roll

for Jan & Feb, 1864.

Present or absent Present

Stoppage, $ 100 for

Due Gov't, $ 100 for

Remarks:

Book mark:

C Smith

(358) *Copyist*

Mc | 3 | U.S.C.T.

George McGaw

Pvt., Co. H, 3 Reg't U. S. Col'd Infantry.

Appears on

Company Muster Roll

for March & April, 1864.

Present or absent Present

Stoppage, $ 100 for

Due Gov't, $ 100 for

Remarks:

Book mark:

W F Ragan

(358) Copyist

Inc. | 3 | U.S.C.T.

George Mc. Crane

Pri., Co. H, 3 Reg't U. S. Col'd Infantry.

Appears on

Company Muster Roll

for May & June, 1864.

Present or absent Present

Stoppage, $ 100 for

Due Gov't, $ 100 for

Remarks:

Book mark:

Henderson

(358) *Copyist*

Mc | 3 | U.S.C.T.

George McCane

Pvt., Co. H, 3 Reg't U. S. Col'd Infantry.

Appears on

Company Muster Roll

for July & Aug., 1864.

Present or absent Present

Stoppage, $ 100 for

Due Gov't, $ 100 for

Remarks:

Book mark:

W F Rogers

(358) Copyist

Mc | 3 | U.S.C.T.

George McCane

Pvt., Co. H, 3 Reg't U. S. Col'd Infantry.

Appears on

Company Muster Roll

for Sept. & Oct., 1864.

Present or absent Present

Stoppage, $ 100 for

Due Gov't, $ 100 for

Remarks: Slave. Paid $7.00 pr. mo. from enlistment to Feby 29, 1864. Back pay due, 2 mos.

Book mark:

W I Rayner

Copyist

(358)

Mc | 3 | U.S.C.T.

George McCune

Pvt., Co. H, 3 Reg't U. S. Col'd Infantry.

Appears on

Company Muster Roll

for Nov. & Dec., 1864.

Present or absent

Stoppage, $ 100 for

Due Gov't, $ 100 for

Remarks: Slave. Paid $700 for mo. from enlistment to Feby 29, 1864. Back pay due, 2 mos.

Book mark:

W F Rogan

(358) Copyist

Mc | 3 | U.S.C.T.

George McCune

Pvt....., Co. H, 3 Reg't U. S. Col'd Infantry.

Appears on

Company Muster Roll

for Jan'y & Feb'y, 1865.

Present or absent Present

Stoppage, $ — 5/100 for Clothing Camp & Garrison Equipage.

Due Gov't, $ ..... 100 for .....

Remarks: .....

Book mark: .....

W F Rogan

(358) *Copyist*

NARA1185

Mc	3	U.S.C.T.

George McClune.

Pvt, Co. H, 3 Reg't U.S. Col'd Inf.

Appears on

Company Muster Roll

for Mar. & Apr., 1865

Present or absent Present.

Stoppage, $ 1.00/100 for C & G.E.

Due Gov't, $ ...... 100 for

Remarks:

Book mark:

Pal
Copyist

(358)

M. | 3 | U.S.C.T.

George McGuire.

Pri., Co. H, 3 Reg't U. S. Col'd Infantry.

Appears on

Company Muster Roll

for May & June, 1865.

Present or absent Present.

Stoppage, $ 1.00/100 for C & B. E.

Due Gov't, $ ..... 100 for .....

Remarks:

NEXT ROLL ON FILE MUSTER OUT.

Book mark:

Pa

(358) *Copyist*

M. | 3 | U.S.C.T.

George McLenine,

Pvt, Co. H, 3 Reg't U. S. Col'd Infantry.

Appears on **Co. Muster-out Roll,** dated Jacksonville Fla Oct. 31, 1865.

Muster-out to date Oct. 31, 1865.

Last paid to June 30, 1865.

Clothing account:

Last settled....., 186 ; drawn since $.....100

Due soldier $ 23 75/100; due U. S. $.....100

Am't for cloth'g in kind or money adv'd $.....100

Due U. S. for arms, equipments, &c., $ 6. 00/100

Bounty paid $ none/100; due $ 100. 00/100

Remarks: Pvt from enrollment.

Book mark:

Pal

Copyist.

(361)

McDonald Henry

Co F, 3 U.S. Col'd Inf.

Private | Private

CARD NUMBERS.

1	62584449	26	
2	62585225	27	
3	62586612	28	
4	62586901	29	
5	62587667	30	
6	62588433	31	
7	62589221	32	
8	62589995	33	
9	62590667	34	
10	62591441	35	
11	62592067	36	
12	62592217	37	
13	62593017	38	
14	62593993	39	
15	62595539	40	
16	90611212	41	
17		42	
18		43	
19		44	
20		45	
21		46	
22		47	
23		48	
24		49	
25		50	

Book Mark:

See also

No. 3 | U.S.C.T.

Henry McDonald,

, Co. F, 3 Reg't U.S. Col'd Inft.

Appears on

Company Descriptive Book

of the organization named above.

DESCRIPTION.

Age 30 years; height 5 feet 6 inches.

Complexion Dark

Eyes Brown; hair Black

Where born Philad. Pa.

Occupation Farmer

ENLISTMENT.

When July 11, 1863.

Where Philad. Pa.

By whom Capt. Wagner, term 3 y'rs.

Remarks: Scar from cut across right wrist. Pock-marked. Mustered in by Capt. Sergeant U.S.A. July 11. 1863.

(383g) Copyist.

Mc | 3 | U.S.C.T.

Henry McDonald

Pri., Co. F, 3 Reg't U. S. Col'd Infantry.

Age 30 years.

Appears on

Company Muster-in Roll

of the organization named above. Roll dated Philad.a, Pa., Aug. 10, 1863.

Muster-in to date July 11, 1863

Joined for duty and enrolled:

When July 11, 1863.

Where Philadelphia, Pa.

Period 3 years.

Remarks:

Book mark:

Beck

(856) Copyist.

Mc | 3 | U.S.C.T.

Henry McDonald

Priv., Co. F, 3 Reg't U. S. Col'd Infantry.

Appears on

Company Muster Roll

for Aug 10 to 31, 1863.

Present or absent Present

Stoppage, $ 100 for

Due Gov't, $ 100 for

Remarks:

Book mark:

Beck

(358) Copyist

Mc | 3 | U.S.C.T.

Henry McDonald

Priv., Co. F, 3 Reg't U. S. Col'd Infantry.

Appears on

Company Muster Roll

for Sept & Oct, 1863.

Present or absent Present

Stoppage, $ 100 for

Due Gov't, $ 100 for

Remarks:

Book mark:

Beck

(358) Copyist

Mc | 3 | U.S.C.T.

Henry McDonald

Priv., Co. F, 3 Reg't U. S. Col'd Infantry.

Appears on

Company Muster Roll

for Nov & Dec, 1863.

Present or absent Present

Stoppage, $ 100 for

Due Gov't, $ 100 for

Remarks:

Book mark:

Beck

(358) Copyist

Mc | 3 | U.S.C.T.

Henry McDonald

Priv., Co. F, 3 Reg't U. S. Col'd Infantry.

Appears on

Company Muster Roll

for Jan & Feb., 1864.

Present or absent Present

Stoppage, $ 100 for

Due Gov't, $ 100 for

Remarks:

Book mark:

WBeck

(858) Copyist

NARA1195

Mc | 3 | U.S.C.T.

Henry McDonald

Priv, Co. F, 3 Reg't U. S. Col'd Infantry.

Appears on

Company Muster Roll

for Mar & Apr, 1864.

Present or absent Present

Stoppage, $ 100 for

Due Gov't, $ 100 for

Remarks:

Book mark:

(358)

Beck
Copyist

M'C | 3 | U.S.C.T.

Henry McDonald

Pvt. Co. F, 3 Reg't U. S. Col'd Infantry.

Appears on

Company Muster Roll

for May & June, 1864.

Present or absent Present

Stoppage, $ ..... 100 for .....

.....

Due Gov't, $ ..... 100 for .....

.....

Remarks: .....

.....

.....

.....

.....

.....

.....

.....

.....

.....

Book mark: .....

L. B. Sayer

(358) Copyist

NARA1197

Mc | 3 | U.S.C.T.

Henry McDonald

Pvt, Co. F, 3 Reg't U. S. Col'd Infantry.

Appears on

Company Muster Roll

for July & August, 1864.

Present or absent Absent

Stoppage, $ ---- 100 for ----

Due Gov't, $ ---- 100 for ----

Remarks: Free on or before 19 April 1861
Stop one cap letter

Book mark:

C. B. Seeger
Copyist

(358)

NARA1198

Mc | 3 | U.S.C.T.

Henry McDonald

Pvt., Co. F, 3 Reg't U. S. Col'd Infantry.

Appears on

Company Muster Roll

for Sept & Oct, 1864.

Present or absent Absent

Stoppage, $ ---- 100 for ----

Due Gov't, $ ---- 100 for ----

Remarks: Pre- sick in G.H. Beaufort S.C. since Sept 8-1864

Book mark: ----

C. B. Sayer
Copyist

(858)

Mc | 3 | U.S.C.T.

Henry McDonald

Pvt, Co. F, 3 Reg't U. S. Col'd Infantry.

Appears on

Company Muster Roll

for Nov & Dec, 1864.

Present or absent Absent

Stoppage, $ ---- 100 for ----

Due Gov't, $ ---- 100 for ----

Remarks: ~~Free~~ - Paid but $7.00 per month from enlistment to Apl 30-64 back pay due. Entered on Descriptive List - Sick at Genl Hospital Beaufort S.C. since Sept 8-1864 & Free on or before Apl 19-1861

Book mark:

(358)

C B Sayer
Copyist

Mc | 3 Inf. | U.S.C.T.

Henry McDonald

Pri., Co. H, 3 Reg't U. S. Col'd Infantry.

Appears on

Descriptive List of Deserters

dated November 30, 1864.

Deserted:

When Nov. 18, 1864.

Where North on furlough

Arrested:

When ....., 186 .

Where .....

Remarks: Due U. S. for transportation $9.43/100

Book mark: .....

J. D. Stearns

(851) Copyist.

NARA1201

Mc | 3 | U.S.C.T.

Henry McDonal

Pvt., Co. F, 3 Reg't U. S. Col'd Infantry.

Appears on

Company Muster Roll

for Jany & Feby, 1865

Present or absent Absent

Stoppage, $ ...... 100 for ......

Due Gov't, $ ...... 100 for ......

Remarks: Free on or before Apl 19 1861 – Sick in Genl Hospital Beaufort S.C. since Sept 8. 1864

Book mark: ......

C B Sawyer
Copyist

(858)

No. 3 U.S.C.T.

Henry McDonald

Pvt, Co. F, 3 Reg't U. S. Col'd Infantry.

Appears on

Company Muster Roll

for March & April, 1865.

Present or absent Absent

Stoppage, $ 100 for

Due Gov't, $ 100 for

Remarks: Free on or before Apr 19/61
Paid Bounty $ per Month
from Enlistment to April 30/64
Back Pay due, Sick
in Gen Hosp Beaufort S.C.
Since Sept 8. 1864.

Book mark:

E. W. Tucker

(358) Copyist

No. 1 **3** **U.S.C.T.**

Henry McDonald

Pvt, Co. F, 3 Reg't U. S. Col'd Infantry.

Appears on

Company Muster Roll

for May & June, 1865.

Present or absent Absent

Stoppage, $ 100 for

Due Gov't, $ 100 for

Remarks: Free on or before Apr. 19/61
Paid bus $7.00 per Month
from Enlistment to April 30/64
Back Pay due. Entered
on Descriptive list, absent
Sick in Gen Hosp Beaufort
S.C. Since Sept 8. 64.

NEXT ROLL ON FILE MUSTER OUT.

Book mark:

J. W. Tucker

(858) Copyist

NARA1204

Mc | 3 | U.S.C.T.

~~Thomas~~ +Henry McDonald

Pvt, Co. F, 3 Reg't U. S. Col'd Infantry.

Appears on Co. Muster-out Roll, dated

Jacksonville Fla Oct 31, 1865.

Muster-out to date ...., 186 .

Last paid to ...., 186 .

Clothing account:

Last settled ...., 186 ; drawn since $.......100

Due soldier $..........100; due U. S. $..........100

Am't for cloth'g in kind or money adv'd $.......100

Due U. S. for arms, equipments, &c., $..........100

Bounty paid $..........100; due $..........100

Remarks: Received unofficial information of Desertion from Regimental Hospital Enrolled as Private 30 years of age. Enrolled & mustered in July 11/63 over

Book mark: V. 140 P 158, 72

+ corrected by Thos. E. Hatch Exr.

S. W. Tucker
Copyist.

(861)

JAN. 19

6259539

☆1891☆

at Camp Wm. Penn Pa
for 3 years.

770

McBorney Warriman

Co. F, 3 U.S. Col'd Inf.

Private Private

CARD NUMBERS.

1	6251653	26	
2	6251810	27	
3	6259307	28	
4	6259399	29	
5	6259473	30	
6	9061129	31	
7		32	
8		33	
9		34	
10		35	
11		36	
12		37	
13		38	
14		39	
15		40	
16		41	
17		42	
18		43	
19		44	
20		45	
21		46	
22		47	
23		48	
24		49	
25		50	

Book Mark:

See also

NARA1207

Mc	3	U.S.C.T.

Warrioman McDowrie

, Co. F, 3 Reg't U.S. Col'd Inft.

Appears on

Company Descriptive Book

of the organization named above.

DESCRIPTION.

Age 18 years; height 5 feet 3 inches.

Complexion Black

Eyes Black; hair Black

Where born — Virginia

Occupation Laborer

ENLISTMENT.

When January 13th, 1865.

Where Norristown

By whom 6 Distr. Penn, term 3 y'rs.

Remarks: Mustered in by
6th Distr. of Penna
January 13th 1865.
Substitute

R. Springsmith

(383g) Copyist.

M | 3 | U.S.C.T.

Warren or McDownie

Appears with rank of Pvt on

Muster in and Descriptive Roll of a Detachment of Substitutes forwarded

for the 3 Reg't U. S. Col'd Inf. Roll dated

Norristown Pa Jan, 1865.

Where born Virginia

Age 18 y'rs; occupation Laborer

When enlisted Jan 13, 1865.

Where enlisted Norristown Pa

For what period enlisted 3 years.

Eyes Black; hair Black

Complexion Black; height 5 ft. 3 in.

When mustered in Jan 13, 1865.

Where mustered in Norristown Pa

Bounty paid $ 100; due $ 100

Where credited

Company to which assigned F

Remarks Substitute for William Everett. North Whitehall 39 sub Dist. 6 Enroll. Dist Pa

Book mark:

Davis

(339) Copyist

NARA1209

M | 3 | U.S.C.T.

Warriman McDowney

Appears with rank of Pvt on

Muster and Descriptive Roll of a Detachment of Substitutes forwarded

for the 3 Reg't U. S. Col'd Inf. Roll dated Chelten Hills Pa Camp Wm Penn, Feb 18, 1865

Where born Virginia

Age 18 y'rs; occupation Laborer

When enlisted , 186 .

Where enlisted

For what period enlisted 3 years.

Eyes Blk; hair Blk

Complexion Blk; height 5 ft. 3 in.

When mustered in Jan 13, 1865

Where mustered in Norristown Pa

Bounty paid $ 100; due $ 100

Where credited

Company to which assigned

Remarks: Sub for Wm Everett N. Whitehall 5 9 Sub Dist - 6 Cong Dist

Book mark:

Sdiers

(339) Copyist

No. 3 U.S.C.T.

Waterman McDowrie

Pvt., Co. F, 3 Reg't U. S. Col'd Infantry.

Appears on

Company Muster Roll

for March & April, 1865.

Present or absent Present

Stoppage, $ 100 for

Due Gov't, $ 100 for

Remarks: Joined Company as a Recruit April 6/65 at Jacksonville Fla

Book mark:

S. W. Tucker

(358) Copyist

NARA 211

Mc 3 U.S.C.T.

Watterman McDowey

Pvt., Co. F, 3 Reg't U. S. Col'd Infantry.

Appears on

Company Muster Roll

for May & June, 1865.

Present or absent Present

Stoppage, $ 100 for

Due Gov't, $ 100 for

Remarks:

NEXT ROLL ON FILE MUSTER OUT

Book mark:

S. W. Tucker

(858) Copyist

Sb | 3 | U.S.C.T.

Waterman McDowery

Pvt, Co. F, 3 Reg't U. S. Col'd Infantry.

Appears on **Co. Muster-out Roll,** dated Jacksonville Fla Oct 31, 1865.

Muster-out to date Oct 31, 1865.

Last paid to June 30, 1865.

Clothing account:

Last settled....., 186 ; drawn since $.....100

Due soldier $ 18 14/100; due U. S. $.....100

Am't for cloth'g in kind or money adv'd $.....100

Due U. S. for arms, equipments, &c., $ 6 00/100

Bounty paid $.....100; due $.....100

Remarks: Enrolled as Private

Book mark: 5269 P.M.G. June 2. 66.

S. W. Tucker

(361) Copyist.

NARA1213

McGee, John W.

Co. E, 3 U.S. Col'd Inf.

Corporal Sergeant

CARD NUMBERS.

1	6257117	26	
2	6257201	27	
3	6257288	28	
4	6257369	29	
5	6257439	30	
6	6257524	31	
7	6257608	32	
8	6257691	33	
9	6257845	34	
10	6258375	35	
11	9060990	36	
12		37	
13		38	
14		39	
15		40	
16		41	
17		42	
18		43	
19		44	
20		45	
21		46	
22		47	
23		48	
24		49	
25		50	

Book Mark:

See also

NARA1214

Mc | 3 | U.S.C.T.

John W. McGee

, Co. E, 3 Reg't U. S. Col'd Inf.

Appears on

Company Descriptive Book

of the organization named above.

DESCRIPTION.

Age 19 years; height 5 feet 10 inches.

Complexion Brown

Eyes Black; hair Black.

Where born Harrison Ohio.

Occupation Farmer

ENLISTMENT.

When July 6th, 1863.

Where Philada Penna

By whom Col. Wagner; term 3 y'rs.

Remarks: Died in U. S. Genl Hospital at St Augustine Fla. Sept. 2nd 1864 of Remitt Fever.
See: Register of Deaths.

R. Springsguth
Copyist.

(383g)

Mc | 3 | U.S.C.T.

John W. McGee

, Co. E, 3 Reg't U. S. Col'd Infantry.

Age 19 years.

Appears on

Company Muster-in Roll

of the organization named above. Roll dated Phila Pa, Aug 1, 1863.

Muster-in to date July 6, 1863

Joined for duty and enrolled:

When July 6, 1863.

Where Phila Pa

Period 3 years.

Remarks:

Book mark:

S P York

(856) Copyist.

Mc | 3 | U.S.C.T.

John W. McGee

Corp., Co. E, 3 Reg't U. S. Col'd Infantry.

Appears on

Company Muster Roll

for Aug. 1 to 31, 1863.

Present or absent Present.

Stoppage, $ 100 for

Due Gov't, $ 100 for

Remarks:

Book mark:

Daggett

(858) Copyist

Mc | 3 | U.S.C.T.

John W McGee

Corpl Co. E, 3 Reg't U. S. Col'd Infantry.

Appears on

Company Muster Roll

for Sept & Oct, 1863.

Present or absent Present

Stoppage, $ 100 for

Due Gov't, $ 100 for

Remarks:

Book mark:

S. A. York

(858) Copyist

Mc | 3 | U.S.C.T.

John W. McGee

Corpl., Co. E, 3 Reg't U. S. Col'd Infantry.

Appears on

Company Muster Roll

for Nov & Dec, 186 3.

Present or absent Present

Stoppage, $ 100 for

Due Gov't, $ 100 for

Remarks:

Book mark:

S. T. York Copyist

(858)

No. | 3 | U.S.C.T.

John W McGee

1st Sgt, Co. E, 3 Reg't U. S. Col'd Infantry.

Appears on

Company Muster Roll

for Jany & Feby, 1864.

Present or absent Present

Stoppage, $ 100 for

Due Gov't, $ 100 for

Remarks:

Book mark:

S. O York

Copyist

(858)

Me | 3 | U.S.C.T.

John W. McGee

Sergt., Co. E, 3 Reg't U. S. Col'd Infantry.

Appears on

Company Muster Roll

for March & April, 1864

Present or absent Present

Stoppage, $ 100 for

Due Gov't, $ 100 for

Remarks: Stole piece Shelter Tent

Book mark:

S. P. York

Copyist

(858)

NARA 1221

M.G. 3 U.S.C.T.

John W. McGee

Sergt. Co. E, 3 Reg't U. S. Col'd Infantry.

Appears on

Company Muster Roll

for May & June, 1864

Present or absent Present

Stoppage, $ 100 for

Due Gov't, $ 100 for

Remarks:

Book mark:

S. W. Jones

(858) Copyist

McC | 3 | U.S.C.T.

John W McGee

1st Sergt Co. E, 3 Reg't U. S. Col'd Infantry.

Appears on

Company Muster Roll

for July & Aug, 1864

Present or absent Present

Stoppage, $ 100 for

Due Gov't, $ 100 for

Remarks: In Hospital at St Augustine Fla, since Augt 4/64. 1st Sergeant from Jan 7/64 to Aug 3/64. Sergt pay due from Jan 7/64

Book mark:

S W Jones

(358) Copyist

HARA1223

Mc 3 | U.S.C.T.

John W McGee

Sergt, Co. E, 3 Reg't U.S. Col'd Infantry.

Appears on

Company Muster Roll

for Sept & Oct, 1864

Present or absent

Stoppage, $ 100 for

Due Gov't, $ 100 for

Remarks: Died in Hospital St Augustine Fla.

Book mark: Died Sept 25. 1864
D.B. 4 978

S W Forrest
Copyist

(858)

Mc | 3 | U.S.C.T.

John W. McGee

Sergt, Co. E, 3 Reg't U. S. Col'd Infantry.

Appears on **Co. Muster-out Roll,** dated Jacksonville Fla, Oct 31, 1865.

Muster-out to date ....., 186 .

Last paid to ....., 186 .

Clothing account:

Last settled....., 186 ; drawn since $.....100

Due soldier $.....100; due U. S. $.....100

Am't for cloth'g in kind or money adv'd $.....100

Due U. S. for arms, equipments, &c., $.....100

Bounty paid $.....100; due $.....100

Remarks: Died, Disease+, at St. Augustine Sept 2, 1864. Final statement forwarded to A. G. O. Sept 8, 1864.

Book mark: 290.106

+ as it appears on roll

Joseph Stewart

(361) Copyist.

McGee, John H.

Sgt., Co. E, 3 Reg't U. S. C. Inf.

1 Enclosures.

Bed Cards	Descriptive Lists
Burial Records	Final Statements 1
Certs. of Dis. for Discharge	Furloughs
C. M. Charges	Med. Des. Lists
Med. Certificates	Orders

Other papers relating to—

Admission to Hosp'l	Furlough
Casualty Sheet (Officer's)	Med. Examination
Confinement	Misc. Information
Contracts	Pay or Clothing
Death or Effects	Personal Reports
Desertions	Rank
Discharge from Hosp'l	Transfer to Hosp'l
Discharge from Service	Transfer to V. R. C.
Duty	Transportation

NARA1226

[OFFICE ENDORSEMENT.]

War Department,

ADJUTANT GENERAL'S OFFICE,

Jany 16th, 1883.

The death of Sgt John W. McGee, Co E, 3d Reg't U. S. Colored Troops, is reported as follows:

On Company Muster Roll.

For Sept & Oct, 1864 no date, 186

Company Muster-out Roll.

September 2nd, 1864

Company Descriptive Book.

, 186

Company Morning Reports.

, 186

Soldier's Final Statement.

September 2d, 1864

Soldier's Record of Death and Interment.

, 186

Soldier's Inventory of Effects.

, 186

Soldier's Certificate of Disability for Discharge.

, 186

Soldier's Individual Muster-out Roll.

, 186

Regimental Return.

For Sept 1864 Sept 2d, 1864

Regimental Quarterly Returns.

(3rd Qr 64) Sept 2d, 1864

Regimental Descriptive Book.

, 186

By Surgeon General.

(, 186

September 2d, 1864 is held to be the correct date, and the Company Muster Roll will be amended accordingly.

L. B. 14/978

W M Barlow
Assistant Adjutant General.

Dmg

noted
Dla

---

26. Co. E

FINAL STATEMENT

OF

Sergt John W. McGee

2d Reg't of U. S. Col'd Troops,

VOLUNTEERS.

Died Sept 2d 1864

NOTE 1.—*Two* of these certificates (or duplicates) are to be given to each volunteer soldier who may be discharged previously to the discharge of his company, that he may at once receive from the Paymaster the pay, &c., due him, and the captain or other officer commanding the company will certify to the act of the delivery of the duplicate certificates; on these certificates the Soldier is "entitled to" his *discharge*, and should also present his discharge to the Paymaster to have the payment endorsed on it. The discharge is to be given back to the Soldier by the Paymaster; the latter only retaining as his voucher the duplicate certificates.

NOTE 2.—If the Soldier is entitled to pay for the use of his horse, the Company Commander will certify to that fact, and also to the time he has pay due for having been so mounted on his own horse.

NOTE 3.—Amounts due the Sutler and Laundress must be entered on the Muster Roll on which the death, desertion, &c., is reported, as well as on the final statement, otherwise the amount cannot be collected from the United States.

NOTE 4.—This blank will be used for deceased volunteers as well as others.

Entd on C. R. of Dmg

NARA1227

I certify, on honor, that John W McGee a Sergt of Captain E P Barker Company (E) of the 8th Regiment of U.S.C.T. VOLUNTEERS, of the State of U.S., born in Harrison Co, State of Ohio, aged 19 years; 5 feet 10 inches high; Black complexion, Black eyes, Black hair, and by occupation a Laborer, having joined the company on its original organization at Philadelphia, and enrolled in it at the muster into the service of the United States at Philadelphia, on the 8th day of July, 1863, (or was musterod in service as a recruit, by Capt Sargent, at Philadelphia, on the first day of August, 1863, to serve in the Regiment,) for the term of Three years: and having served **HONESTLY** and **FAITHFULLY** with his Company in to the present date, is now entitled to a **DISCHARGE** by reason of

A.G.O. Disch Sept 2d 8th Box sec Inv No

The said John W McGee was last paid by Paymaster McConnell to include the 30th day of April, 1864, and has pay due him from that time to the present date; he is entitled to pay and subsistence for **TRAVELING** to place of enrollment and whatever other allowances are authorized to volunteer soldiers, or militia, so discharged. He has received ~~$47.66~~ 47 66/100 dollars, advanced by the United States on account of **CLOTHING.** 47.66

There is to be stopped from him, on account of the State of ______, or other authorities for **CLOTHING**, &c., received on entering service, ______ /100 dollars; also, for expenses of SUBSISTENCE for TRAVELING from place of enrollment to the place of rendezvous, amounting to ______ /100 dollars: and on account of the United States for **EXTRA CLOTHING** received in kind from ______ and for other stoppages, viz:

______ amounting to ______ /100 dollars; and he has been SUBSISTED for TRAVELING to his place of enrollment, up to the ______, 186 .

He is indebted to ______, **SUTLER**, ______ /100 dollars.

He is indebted to ______, **LAUNDRESS**, ______ /100 dollars.

Given in Duplicate, at Jacksonville Fla, this 2nd day of Sept, 1864.

E P Barker

Capt Co. E. 8th U.S.C.T.
Commanding Company.

[A. G. O. No. 95.]

NARA1228

McGill, William

Co C, 3 U.S. Col'd Inf.

Private | Private

CARD NUMBERS.

1	6254775	26	
2	6254850	27	
3	6254937	28	
4	6255013	29	
5	6255089	30	
6	6255159	31	
7	6255231	32	
8	6255301	33	
9	6255369	34	
10	6255442	35	
11	6255517	36	
12	6255601	37	
13	6255694	38	
14	6255788	39	
15	6255875	40	
16	906077	41	
17		42	
18		43	
19		44	
20		45	
21		46	
22		47	
23		48	
24		49	
25		50	

Book Mark:

See also

NNRA1229

Mc | 3 | U.S.C.T.

William McGill

, Co. C, 3 Reg't U. S. Col'd Inf.

Appears on

Company Descriptive Book

of the organization named above.

DESCRIPTION.

Age 28 years; height 5 feet 11½ inches.

Complexion Blk

Eyes Blk; hair Blk

Where born Lancaster Co Penna

Occupation Farmer

ENLISTMENT.

When June 3, 1863.

Where Phila

By whom Lt. Col. Haynes, term 3 y'rs.

Remarks:

(383g) Copyist.

HARA1238

Mc | 3 | U.S.C.T.

Wm. McGill

Pvt., Co. C, 3 Reg't U. S. Col'd Infantry.

Age 28 years.

Appears on

Company Muster-in Roll

of the organization named above. Roll dated Philu Pa., July 26, 1863.

Muster-in to date July 3, 1863.

Joined for duty and enrolled:

When July 3, 1863.*

Where Philu Pa *

Period 3 years.*

Remarks:

*☞ Muster-in roll shows enrollment of all men of this company as of same date and place. See enrollment on subsequent card or cards.

Book mark:

C T McLaughlin

(356c) Copyist.

Mc | 3 | U.S.C.T.

Wm. McGill

Pvt, Co. C, 3 Reg't U. S. Col'd Infantry.

Appears on

Company Muster Roll

for July 3 to Aug 31, 1863.

Joined for duty and enrolled:

When July 3, 1863.*

Where Phila Pa. *

Period 3 years.*

Present or absent Present

Stoppage, $ 100 for

Due Gov't, $ 100 for

Remarks:

* ☞ See enrollment on card from muster-in roll.

Book mark:

C. S. McLaughlin,
Copyist.

(358c)

M | 3 | U.S.C.T.

Wm. McGill

Pvt., Co. C, 3 Reg't U. S. Col'd Infantry.

Appears on

Company Muster Roll

for Sept & Oct, 1863.

Joined for duty and enrolled:

When July 3, 1863.*

Where Phila Pa *

Period 3 years.*

Present or absent Present

Stoppage, $ 100 for

Due Gov't, $ 100 for

Remarks:

* ☞ See enrollment on card from muster-in roll.

Book mark:

C. S. McLaughlin

(358c) Copyist.

Mc | 3 | U.S.C.T.

Wm. McGill

Pvt., Co. C, 3 Reg't U. S. Col'd Infantry.

Appears on

Company Muster Roll

for Nov. & Dec, 1863.

Joined for duty and enrolled:

When July 3, 1863.*

Where Phila Pa.*

Period 3 years.*

Present or absent Present

Stoppage, $ 100 for

Due Gov't, $ 100 for

Remarks:

* ☞ See enrollment on card from muster-in roll.

Book mark:

C. S. McLaughlin
Copyist.

(358c)

NARA1234

Mc | 3 | U.S.C.T.

Wm. McGill

Pvt., Co. C, 3 Reg't U. S. Col'd Infantry.

Appears on

Company Muster Roll

for Jan & Feb., 1864.

Joined for duty and enrolled:

When July 3, 1864.*

Where Phila Pa *

Period 3 years.*

Present or absent Present

Stoppage, $ 100 for

Due Gov't, $ 100 for

Remarks:

* See enrollment on card from muster-in roll.

Book mark:

C. S. McLaughlin
Copyist.

(358c)

Mc | 3 | U.S.C.T.

Wm McGill

Pvt., Co. C, 3 Reg't U. S. Col'd Infantry.

Appears on

Company Muster Roll

for Mar & Apr, 1864.

Joined for duty and enrolled:

When July 3, 1863.*

Where Phila, Pa, *

Period 3 years.*

Present or absent Present

Stoppage, $ 100 for

Due Gov't, $ 100 for

Remarks:

* ☞ See enrollment on card from muster-in roll.

Book mark:

C S McLaughlin

(358c) Copyist.

Mc. | 3 | U.S.C.T.

William McGill,

Pvt., Co. C, 3 Reg't U. S. Col'd Infantry.

Appears on

Company Muster Roll

for May and June, 1864

Joined for duty and enrolled:

When July 3d, 1863*

Where Philadelphia, Pa.*

Period 3 years.*

Present or absent Present.

Stoppage, $.....100 for .....

Due Gov't, $.....100 for .....

Remarks:.....

* ☞ See enrollment on card from muster-in roll.

Book mark:.....

Sharin

(358c) *Copyist.*

Mc | 3 | U.S.C.T.

William McGill,

Pvt., Co. C, 3 Reg't U. S. Col'd Infantry.

Appears on

Company Muster Roll

for July and Aug., 1864

Joined for ~~duty~~ and enrolled:

When July 3d, 1863.*

Where Phila. Pa.*

Period 3 years.*

Present or absent Present.

Stoppage, $.....100 for .....

Due Gov't, $ 2 100 for .....

Remarks: Freed on or before April 19th. 1861.

* ☞ See enrollment on card from muster-in roll.

Book mark: .....

Sharin

(358c)

Copyist.

Mc | 3 | U.S.C.T.

William McGill,

Pvt., Co. C, 3 Reg't U. S. Col'd Infantry.

Appears on

Company Muster Roll

for Sept & Oct, 1864

Joined for duty and enrolled:

When July 3d, 1863*

Where Philadelphia, Pa.*

Period 3 years.*

Present or absent Present

Stoppage, $ ..... 100 for .....

Due Gov't, $ ..... 100 for .....

Remarks: Free on or before April 19th. 1861, Paid seven dollars per month to April 30th. 1864. Back pay due.

* ☞ See enrollment on card from muster-in roll.

Book mark:

Sharin

(358c) *Copyist.*

Mc. | 3 | U.S.C.T.

William McGill,

Pvt., Co. C, 3 Reg't U. S. Col'd Infantry.

Appears on

Company Muster Roll

for Nov. & Dec., 1864

Joined for duty and enrolled:

When July 3d., 1863.*

Where Philadelphia, Pa.*

Period 3 years.*

Present or absent Present.

Stoppage, $ 100 for

Due Gov't, $ 100 for

Remarks: Paid but $7.00 per month to April 30th. 1864. Back pay due.

Free.

* ☞ See enrollment on card from muster-in roll.

Book mark:

Sherin

(358c) *Copyist.*

Me. | 3 | U.S.C.T.

William McGill,

Pvt., Co. C, 3 Reg't U. S. Col'd Infantry.

Appears on

Company Muster Roll

for Jan. and Feb., 1865.

Joined for duty and enrolled:

When July 3d., 1863.*

Where Philadelphia, Pa.*

Period 3 years.*

Present or absent Present.

Stoppage, $..... 100 for .....

Due Gov't, $..... 100 for .....

Remarks: Free.

* See enrollment on card from muster-in roll.

Book mark: .....

(358c)

Copyist.

Mo. | 3 | U.S.C.T.

William McGill

Pvt., Co. C, 3 Reg't U. S. Col'd Infantry.

Appears on

Company Muster Roll

for Mch & Apl, 1865.

Joined for duty and enrolled:

When 3 July, 1863.*

Where Phila Pa.*

Period 3 years.*

Present or absent present

Stoppage, $1 50/100 for ordnance.

Due Gov't, $ 100 for

Remarks: Free

* ☞ See enrollment on card from muster-in roll.

Book mark:

G. E. Dayton

(358c) Copyist.

M. | 3 | U.S.C.T.

William McGill

Pvt, Co. C, 3 Reg't U. S. Col'd Infantry.

Appears on

Company Muster Roll

for May + June, 1865.

Joined for duty and enrolled:

When 3 July, 1863.*

Where Phila, Pa.*

Period 3 years.*

Present or absent present.

Stoppage, $ 1 50/100 for ordnance

Due Gov't, $ 100 for

Remarks: Free

* See enrollment on card from muster-in roll.

Book mark:

G. E. Dayton

(358c) *Copyist.*

M | 3 | U.S.C.T.

William McGill

Pvt, Co. C, 3 Reg't U. S. Col'd Infantry.

Appears on

Company Muster Roll

for July + Aug, 1865.

Joined for duty and enrolled:

When 3 July, 1863.*

Where Phila Pa.*

Period 3 years.*

Present or absent present.

Stoppage, $ 100 for

Due Gov't, $ 100 for

Remarks:

* ☞ See enrollment on card from muster-in roll.

Book mark:

G. E. Dayton

(358c)

Copyist.

NARA1244

M. | 3 | U.S.C.T.

William McGill

Pvt, Co. C, 3 Reg't U. S. Col'd Infantry.

Appears on **Co. Muster-out Roll**, dated

Jacksonville, Fla, 31 Oct, 1865.

Muster-out to date 31 Oct, 1865.

Last paid to 30 June, 1865.

Clothing account:

Last settled ...., 186 ; drawn since $......100

Due soldier $ 17 10/100; due U. S. $........100

Am't for cloth'g in kind or money adv'd $......100

Due U.S. for C & G. Eq $4.90

Due U. S. for arms, equipments, &c., $........100

Bounty paid $........100; due $ 100 00/100

Remarks: Stop for Transportation $5 86

Book mark: ....

G. E. Dayton
Copyist.

(361)

NARA1245

McGill Wm

, Co. C, 3 Reg't U.S.C.T.

2 Enclosures.

Bed Cards	Final Statements
Burial Records	Furloughs or L. of A
Certs. of Dis. for Discharge	Med. Certificates
C. M. Charges	Med. Des. Lists
Descriptive Lists	Orders
Discharge Certificates	Pris. of War Record
Enlistment Papers	Resignations

Other papers relating to—

Admission to Hosp'l	Furlough or L. of A 1
Casualty Sheet	Med. Examination
Confinement	Misc. Information 1
Contracts	Pay or Clothing
Death or Effects	Personal Reports
Desertion	Rank
Discharge from Hosp'l	Transfer to Hosp'l
Discharge from Service	Transfer to V. R. C.
Duty	Transportation

Jacksonville Fla
Aug. 11th 1865

Heap John G.
1st Lieut. 3rd U.S.C.T.
E.B.P.10

asks a Furlough for Private William McGill of Co. C 3rd U.S.C.T.
(one enclosure)

Head Qrs 3rd U.S.C.T.
Jacksonville Fla
August 11th 1865

Respectfully forwarded approved. There are at present none of the regt. absent on furlough. One application already in. There are (894) eight hundred & ninety four enlisted men belonging to the regiment.

J. N. Bardwell
Lt Col. 3rd U.S.C.T. Commdg

P.I.B. 115
Head quarters
Post of Jacksonville Fla
August 12th 1865
Respectfully forwarded
Approved.
W. W. Marple
Colonel 34th U.S.C.T.
Commanding Post

Head Qrs Dist of East Fla
Jacksonville Fla
E.M.B. 3 818. Aug 11. 1865
Resp forwarded
approved
[illegible]
Brig Gen Vols

Jacksonville Fla
Aug 11th 1865

Capt J. S. Ramson
Asst Adjt Gen. Dept of Fla

Captain:-

I have the honor to request a furlough of thirty days, for Private William McGill of Co E 3rd U.S.C.T., for general good soldierly conduct.

This man lost a friend a short time since, who left him some property, to obtain which, it is necessary that he should go home.

Very Respectfully
Your Obedient Servant
John G. Hearse
1st Lieut Comdg the Company

Phila. Post Hospital.
November 18th 1865

Huntingdon L.D. Bvt. Major & Capt
Surg. U.S. Army in Charge of Hospl

Gives information that the within
named man is returned to duty

Wm. McGill
2nd U.S.V.V.

NARA1249

Philadelphia ~~U. S. Army General~~ Post. Hospital,

November 15th, 1865.

SIR:

I have to inform you that the following named Soldiers are this day returned to duty, and are directed to report to you:

NAMES.	RANK.	REGIMENT.	CO.	REMARKS.
Wm. McGill.	Priv:	3 [illegible]	C.	Hospital Record

I am, sir, very respectfully,

Your obedient servant,

D. L. Huntington

Bt. Maj and Assistant Surgeon U. S. Army, in charge of Hospital.

McGruder, Thomas

Co K, 3 U.S. Col'd Inf.

Private Private

CARD NUMBERS.

1	6260760	26	
2	6260921	27	
3	6260840	28	
4	6261003	29	
5	6261043	30	
6	6261142	31	
7	6261239	32	
8	6261313	33	
9	6261347	34	
10	6261465	35	
11	6261542	36	
12	6261627	37	
13	6261721	38	
14	6261812	39	
15	9061319	40	
16		41	
17		42	
18		43	
19		44	
20		45	
21		46	
22		47	
23		48	
24		49	
25		50	

Book Mark:

See also

R&P 315641.
3791723 P. off.
S. 1068695 P. Off
S. 1448771 P.O. rec'd.

NARA1252

Mc 3 | U.S.C.T.

Thomas McGradier

, Co. H, 3 Reg't U. S. Col'd Inf.

Appears on

Company Descriptive Book

of the organization named above.

DESCRIPTION.

Age 20 years; height 5 feet 7 inches.

Complexion Black

Eyes Black ; hair Black

Where born Hardy Co. Va.

Occupation Farmer

ENLISTMENT.

When July 17, 1863.

Where Philada Penn.

By whom Lt Col Wagner; term 3 y'rs.

Remarks:

Daggett
Copyist.

(383g)

HARRIS

Mc | 3 | U.S.C.T.

Thomas McGruder

Pri, Co. H, 3 Reg't U. S. Col'd Infantry.

Age 20 years.

Appears on

Company Muster-in Roll

of the organization named above. Roll dated Philadelphia Pa July 25, 1863.

Muster-in to date July 17, 1863.

Joined for duty and enrolled:

When July 17, 1863.

Where Phila. Pa.

Period 3 years.

Remarks:

Book mark:

O G Smith

(856) Copyist.

Mc | 3 | U.S.C.T.

Thomas McGruder

Pri....., Co. H, 3 Reg't U. S. Col'd Infantry.

Appears on

Company Muster Roll

for July 25 to Aug 31, 1863.

Present or absent Present

Stoppage, $..... 100 for .....

Due Gov't, $..... 100 for .....

Remarks: .....

Book mark: .....

C G Smith

(358) Copyist

Mc | 3 | U.S.C.T.

Thomas McGruder

Pri, Co. H, 3 Reg't U. S. Col'd Infantry.

Appears on

Company Muster Roll

for Sept & Oct, 1863.

Present or absent Present

Stoppage, $ 100 for

Due Gov't, $ 100 for

Remarks:

Book mark:

O Y Smith

Copyist

(358)

McC | 3 | U.S.C.T.

Thos McGruder

Pri....., Co. H, 3 Reg't U. S. Col'd Infantry.

Appears on

Company Muster Roll

for Nov & Dec, 1863.

Present or absent Present

Stoppage, $..... 100 for .....

Due Gov't, $..... 100 for .....

Remarks: .....

Book mark: .....

C Y Smith

(358) *Copyist*

Mc | 3 | U.S.C.T.

Thos McGruder

Pri, Co. H, 3 Reg't U. S. Col'd Infantry.

Appears on

Company Muster Roll

for Jan & Feb, 1864.

Present or absent Present

Stoppage, $ 100 for

Due Gov't, $ 100 for

Remarks:

Book mark:

C W Smith

Copyist

(358)

Mc | 3 | U.S.C.T.

Thomas McGruder

Pvt., Co. H, 3 Reg't U. S. Col'd Infantry.

Appears on

Company Muster Roll

for March & April, 1864.

Present or absent Present

Stoppage, $ 100 for

Due Gov't, $ 100 for

Remarks:

Book mark:

W F Ragan

(358) *Copyist*

Mc. | 3 | U.S.C.T.

Thomas McGruder

Pvt., Co. H, 3 Reg't U. S. Col'd Infantry.

Appears on

Company Muster Roll

for May & June, 186 4

Present or absent Present

Stoppage, $ ..... 100 for .....

Due Gov't, $ ..... 100 for .....

Remarks: .....

Book mark: .....

(358) Colored Army

NARA1268

Mc | 3 | U.S.C.T.

Thomas McGruder

Pvt., Co. H, 3 Reg't U. S. Col'd Infantry.

Appears on

Company Muster Roll

for July & Aug., 186 4.

Present or absent Present

Stoppage, $ 100 for

Due Gov't, $ 100 for

Remarks:

Book mark:

W F Rogan

Copyist

(358)

Mo | 3 | U.S.C.T.

Thomas McGruder

Pvt., Co. H, 3 Reg't U. S. Col'd Infantry.

Appears on

Company Muster Roll

for Sept. + Oct., 1864.

Present or absent Present

Stoppage, $ 100 for

Due Gov't, $ 100 for

Remarks: Slave. Paid $7.00 pr. mo. from enlistment to Feby 29, 1864. Back pay due, 2 mos.

Book mark:

W. P. Rogers

(358) Copyist.

Mc | 3 | U.S.C.T.

Thomas McGruder

Pvt., Co. H, 3 Reg't U. S. Col'd Infantry.

Appears on

Company Muster Roll

for Nov. & Dec., 1864.

Present or absent Present

Stoppage, $ 100 for

Due Gov't, $ 100 for

Remarks: Slave. Paid $7.00 for mo. from enlistment to Feby 29, 1864. Back pay due, 2 mos.

Book mark:

W T Ryan

Copyist

(358)

Mc | 3 | U.S.C.T.

Thomas McGruder

Pvt., Co. H, 3 Reg't U. S. Col'd Infantry.

Appears on

Company Muster Roll

for Jany & Feby, 1865.

Present or absent Present

Stoppage, $ — 20/100 for Ord & Ord Stores &

5 Cents for Clothing Camp & Garrison Equipage.

Due Gov't, $ ..... 100 for .....

Remarks: .....

Book mark: .....

W F Rogers

(858) Copyist

Mc | 3 | **U.S.C.T.**

Thomas McGruder.

Pt, Co. H, 3 Reg't U. S. Col'd Inf.

Appears on

Company Muster Roll

for Mar. & Apr., 1865

Present or absent present.

Stoppage, $ 28/100 for Arms and

$1.00 for C & E.

Due Gov't, $ 100 for

Remarks:

Book mark:

Pol

(358) Copyist

NARA1265

M. | 3 | U.S.C.T.

Thomas McGruder.

Pri, Co. H, 3 Reg't U. S. Col'd Infantry.

Appears on

Company Muster Roll

for May & June, 1865.

Present or absent Present.

Stoppage, $ 0. 67/100 for ord & $1.00 for C & G. E.

Due Gov't, $ ___ 100 for

Remarks:

NEXT ROLL ON FILE MUSTER OUT.

Book mark:

Pal, Copyist

(358)

M. | 3 | U.S.C.T.

Thomas McGruder.

Pvt., Co. H, 3 Reg't U. S. Col'd Infantry.

Appears on **Co. Muster-out Roll,** dated Jacksonville Fla, Oct. 31, 1865.

Muster-out to date Oct. 31, 1865.

Last paid to June 30, 1865.

Clothing account:

Last settled....., 186 ; drawn since $.....100

Due soldier $ 16 70/100; due U. S. $.....100

Am't for cloth'g in kind or money adv'd $.....100

Due U. S. for arms, equipments, &c., $ 6. 00/100

Bounty paid $ none/100; due $ 100. 00/100

Remarks: Priv. from enrollment. Returned to Regt from Hospital at Jacksonville Fla. Oct. 30/65.

Book mark: 2864.1879.1673.1880.

Pol

(361) Copyist.

NARA 1267

100

McGuire, Elisha

Co K 3 U.S. Col'd Inf.

Private Corporal

CARD NUMBERS.

1	6 2 6 1 5 6 0	26	
2	6 2 6 3 0 4 4	27	
3	6 2 6 3 1 6 0	28	
4	6 2 6 3 2 4 3	29	
5	6 2 6 3 3 2 7	30	
6	6 2 6 3 4 0 3	31	
7	6 2 6 3 4 4 1	32	
8	6 2 6 3 5 5 6	33	
9	6 2 6 3 6 2 4	34	
10	6 2 6 3 6 6 4	35	
11	6 2 6 3 7 3 1	36	
12	6 2 6 3 4 0 9	37	
13	6 2 6 3 4 4 7	38	
14	6 2 6 3 9 4 0	39	
15	6 2 6 4 0 7 3	40	
16	9 0 6 1 5 5 0	41	
17		42	
18		43	
19		44	
20		45	
21		46	
22		47	
23		48	
24		49	
25		50	

Book Mark:

See also

Mc | 3 | U.S.C.T.

Elisha McGuire

....., Co. K, 3 Reg't U. S. Col'd Inf.

Appears on

Company Descriptive Book

of the organization named above.

DESCRIPTION.

Age 36 years; height 5 feet 10 3/4 inches.

Complexion Dark

Eyes Brown; hair Dark

Where born Penna.

Occupation Laborer

ENLISTMENT.

When July 13, 1863.

Where Phila. Pa.

By whom Lt Col Wagner; term 3 y'rs.

Remarks: Scar on forefinger of right hand.
Appointed Corporal Sept. 3d 1864 per G.O. No. 62 Reg. H. 2.

Daggett

(383g) Copyist.

M | 3 | U.S.C.T.

Elisha McGuire

Appears with rank of Pvt on

Muster and Descriptive Roll of a Detachment of Substitutes forwarded

for the 3 Reg't U. S. Col'd Inf. Roll dated Pittsburg, July 21, 1863.

Where born Allegheny Pa

Age 36 y'rs; occupation Laborer

When enlisted July 13, 1863.

Where enlisted Pittsburg

For what period enlisted 3 years.

Eyes Brown; hair Dark

Complexion Dark; height 5 ft 10¾ in.

When mustered in July 13, 1863.

Where mustered in Pittsburg

Bounty paid $ 100; due $ 100

Where credited

Company to which assigned C

Remarks: Sub for Josiah Stevenson 1st Mass

Book mark:

Sams

(339) Copyist

No. | 3 | U.S.C.T.

Elisha McGuire,

Pvt, Co. K, 3 Reg't U. S. Col'd Infantry.

Age 36 years.

Appears on

Company Muster-in Roll

of the organization named above. Roll dated Phila., Pa. Aug 10, 1863.

Muster-in to date July 13, 1863

Joined for duty and enrolled:

When July 13, 1863.

Where Phila., Pa.

Period 3 years.

Remarks: Sub.

Book mark:

Wastie

(856) Copyist.

NARA1271

N.C.	3	U.S.C.T.

Elisha McGinn,

Pvt., Co. K, 3 Reg't U. S. Colored Infantry.

Appears on

Company Muster Roll

for Aug. 10 to Aug. 31, 1863.

Present or absent Present.

Stoppage, $ .... 100 for ....

Due Gov't, $ .... 100 for ....

Remarks: Sub.

Book mark: ....

Hastee
Copyist.

(858)

NARA1272

M. 3 | U.S.C.T.

Elisha McGuire,

Pvt, Co. K, 3 Reg't U. S. Colored Infantry.

Appears on

Company Muster Roll

for Sept. & Oct, 1863.

Present or absent Present

Stoppage, $........ 100 for ....

Due Gov't, $........ 100 for ....

Remarks: ....

Book mark: ....

Hastie,

(358) Copyist.

Mc | 3 | U.S.C.T.

Elisha McGuire,

Pvt, Co. K, 3 Reg't U. S. Colored Infantry.

Appears on

Company Muster Roll

for Nov. & Dec, 1863.

Present or absent Present

Stoppage, $ 100 for

Due Gov't, $ 100 for

Remarks: Stop for camp Equipments $0.44

Book mark:

Hastie

(358) Copyist.

No. 3 | U.S.C.T.

Elisha McGuire,

Pvt., Co. K, 3 Reg't U. S. Colored Infantry.

Appears on

Company Muster Roll

for Jan. & Feb., 1864.

Present or absent Present

Stoppage, $ 100 for

Due Gov't, $ 100 for

Remarks:

Book mark:

Hastie,

(358) Copyist.

Mc | 3 | U.S.C.T.

Elisha McGuire

Pvt., Co. K, 3 Reg't U. S. Colored Infantry.

Appears on

Company Muster Roll

for Mar & Apr, 1864

Present or absent Present

Stoppage, $ 100 for

Due Gov't, $ 100 for

Remarks:

Book mark:

Randolph

(358) Copyist.

Mc | 3 | U.S.C.T.

Elisha McGuire

Pri., Co. K, 3 Reg't U. S. Colored Infantry.

Appears on

Company Muster Roll

for May & June, 1864.

Present or absent Present

Stoppage, $ 100 for

Due Gov't, $ 100 for

Remarks:

Book mark: Randolph

(358) *Copyist.*

Mc | 3 | U.S.C.T.

Elisha McGuire

Pvt., Co. K, 3 Reg't U. S. Colored Infantry.

Appears on

Company Muster Roll

for July & Aug, 1864.

Present or absent Present

Stoppage, $ 100 for

Due Gov't, $ 100 for

Remarks:

Book mark:

Randolph

(358) Copyist.

Mc 3 U.S.C.T.

Elisha McGuire

Corp., Co. K, 3 Reg't U. S. Colored Infantry.

Appears on

Company Muster Roll

for Sept & Oct, 1864.

Present or absent Present

Stoppage, $ 100 for

Due Gov't, $ 100 for

Remarks: Paid $ 7 00 per month from Aug 1st to Feb 29 1864 Back pay due

Book mark:

Randolph

(358) Copyist.

Mc | 3 | U.S.C.T.

Elisha McGuire

Corp, Co. K, 3 Reg't U. S. Colored Infantry.

Appears on

Company Muster Roll

for Nov & Dec, 1864.

Present or absent Present

Stoppage, $ 100 for

Due Gov't, $ 100 for

Remarks: Made Corporal Sept 3/1864 Paid $7 per month from mustr'd to Feb 29/64 Back pay due.

Book mark:

Randolph

(358) Copyist.

Mc | 3 | U.S.C.T.

Elisha McGuire

Corp, Co. K, 3 Reg't U. S. Colored Infantry.

Appears on

Company Muster Roll

for Jan & Feb, 1865.

Present or absent Present

Stoppage, $ ___ 100 for

Due Gov't, $ ___ 100 for

Remarks: Appointed Corp Dec 14/64 per Gen Ord 56 Reg't H'd Qrs.

Book mark:

Randolph

(358) Copyist.

Mc | 3 | U.S.C.T.

Elisha McGuire

Corpl., Co. K, 3 Reg't U. S. Colored Infantry.

Appears on

Company Muster Roll

for March & April, 1865.

Present or absent Present

Stoppage, $ 100 for

Due Gov't, $ 1.12/100 for camp equipage

Remarks: Free on or before April 19th 1861. Paid but $700 per month from enlistment to Feb. 29th 1864 Back pay due. Appointed Corpl. Sept. 3. 1864

Book mark:

E. M. Hunter

(358) Copyist.

NARA1282

Mc 3 U.S.C.T.

Elisha McGuire

Corpl, Co. K, 3 Reg't U. S. Colored Infantry.

Appears on

Company Muster Roll

for May & June, 1865.

Present or absent Present

Stoppage, $ ..... 100 for .....

Due Gov't, $ 1 12/100 for camp equipage

Remarks: Free on or before April 19th 1861. Apptd Corporal Sept. 3d 1864 Paid but $7.00 per month from enlistment to Feb. 29th 1864. Back pay due.

~~NEXT ROLL ON FILE MUSTER OUT.~~

Book mark:

E. N. Hunter

(358) Copyist.

Mc | 3 | U.S.C.T.

Elisha McGuire

Corpl., Co. K, 3 Reg't U. S. Col'd Infantry.

Appears on **Co. Muster-out Roll,** dated Jacksonville, Fla. Oct. 31, 1865.

Muster-out to date Oct. 31, 1865.

Last paid to June 30, 1865.

Clothing account:

Last settled....., 186 ; drawn since $.....100

Due soldier $.....100; due U. S. $ 51.92/100

Am't for cloth'g in kind or money adv'd $.....100

Due U. S. for arms, equipments, &c., $ 6.00/100

Bounty paid $.....100; due $.....100

Remarks: Substitute, Appt'd Corpl. Sept. 3d 1864. Joined as private.

Book mark: 425.343

E. H. Hunter

(361) *Copyist.*

McIntire, Richard

Co. B ; 3 U.S. Col'd Inf.

Corporal | Corporal

CARD NUMBERS.

1	6255957	26	
2	6256039	27	
3	6256125	28	
4	6256205	29	
5	6256283	30	
6	6256339	31	
7	6256436	32	
8	6256512	33	
9	6256586	34	
10	6256660	35	
11	6256737	36	
12	6256814	37	
13	6256905	38	
14	6256998	39	
15	9060893	40	
16		41	
17		42	
18		43	
19		44	
20		45	
21		46	
22		47	
23		48	
24		49	
25		50	

Book Mark:

See also

RofP 518.490
S 1808428 P.O. mary
O. 255-6904 And M.D.
P.O. m. & m. Cof. 806777-3-7-17-ERJ

NARA1285

No. 3 **U.S.C.T.**

Richard McIntire

, Co. D, 3 Reg't U. S. Col'd Inf.

Appears on

Company Descriptive Book

of the organization named above.

DESCRIPTION.

Age 18 years; height 5 feet 6 inches.

Complexion Brown

Eyes Black; hair Black

Where born Orleans. N. Y.

Occupation Barber

ENLISTMENT.

When July 4th, 1863.

Where Philad.a Penn.a

By whom Col. Wagner; term 3 y'rs.

Remarks:

R. Springgate

(383y) Copyist.

Mc | 3 | U.S.C.T.

Richard McEntire

Corp., Co. D, 3 Reg't U. S. Col'd Infantry.

Age 18 years.

Appears on

Company Muster-in Roll

of the organization named above. Roll dated Philada. Pa. July 26, 1863.

Muster-in to date July 4, 1863

Joined for duty and enrolled:

When July 4, 1863.

Where Philadelphia Pa.

Period 3 years.

Remarks:

Book mark:

E. G. Rankin

(856) Copyist.

NARA1288

Mc | 3 | U.S.C.T.

Richard McIntire

Corp, Co. D, 3 Reg't U. S. Col'd Infantry.

Appears on

Company Muster Roll

for July 26 to Aug. 31, 1863.

Present or absent Present

Stoppage, $ ______ 100 for ______

Due Gov't, $ ______ 100 for ______

Remarks: ______

Book mark: ______

E. E. Rankin

(358) Copyist

NARA1289

Me | 3 | U.S.C.T.

Richard McIntire

Corp., Co. D, 3 Reg't U. S. Col'd Infantry.

Appears on

Company Muster Roll

for Sept. & Oct., 1863.

Present or absent Present.

Stoppage, $ 100 for

Due Gov't, $ 100 for

Remarks: Stop for 1 Cap bugle.

Book mark:

E. E. Rankin

(358)

Copyist

MRR1298

Mc | 3 | U.S.C.T.

Richard McIntire

Corp., Co. D, 3 Reg't U. S. Col'd Infantry.

Appears on

Company Muster Roll

for Nov. & Dec., 1863.

Present or absent Present.

Stoppage, $ 100 for

Due Gov't, $ 100 for

Remarks:

Book mark:

E. E. Rankin

(358) *Copyist*

Mc | 3 | U.S.C.T.

Richard McIntire

Corpl., Co. D, 3 Reg't U. S. Col'd Infantry.

Appears on

Company Muster Roll

for Jan. & Feb., 1864.

Present or absent Present.

Stoppage, $ 100 for

Due Gov't, $ 100 for

Remarks: Stop for Knapsack & Straps, 1 Wiper.

Book mark:

P. E. Rankin

(358) Copyist

NARA1292

Mc | 3 | U.S.C.T.

Richard McIntire

Corp, Co. D, 3 Reg't U. S. Col'd Infantry.

Appears on

Company Muster Roll

for March & April, 1864.

Present or absent Present

Stoppage, $ 100 for

Due Gov't, $ 100 for

Remarks:

Book mark:

J H Scholey

(358) Copyist

NARA1293

Mc | 3 | U.S.C.T.

Richard McIntire

Corp, Co. D, 3 Reg't U. S. Col'd Infantry.

Appears on

Company Muster Roll

for May & June, 1864.

Present or absent Absent

Stoppage, $ 100 for

Due Gov't, $ 100 for

Remarks: Stop for 1 Screw-driver / Sick in Hospital Jacksonville Fla since June 6"/64

Book mark:

J H Scholey
Copyist

(358)

NARA1294

Mc | 3 | U.S.C.T.

Richard McIntire

Corp, Co. D, 3 Reg't U. S. Col'd Infantry.

Appears on

Company Muster Roll

for July & Aug, 1864.

Present or absent absent

Stoppage, $ 100 for

Due Gov't, $ 100 for

Remarks: Stop for 1 Screw driver
Sick in Hospital Jackson-
ville Fla Since June
6" / 64
Free on or before
April 19/61

Book mark:

JH Schidey

(358) Copyist

NARA1295

Mc | 3 | U.S.C.T.

Richard McIntire

Corp, Co. D, 3 Reg't U. S. Col'd Infantry.

Appears on

Company Muster Roll

for Sep & Oct, 1864.

Present or absent Absent

Stoppage, $ 100 for

Due Gov't, $ 100 for

Remarks: Stop for 1 Screw Driver
Sick in Hospital
Jacksonville Fla.
Since June 6" 1864
Gun lost or Expired
April 19/61

Book mark:

J H Shirley
Copyist

(358)

NARA1296

Mc | 3 | U.S.C.T.

Richard McIntire

Corp, Co. D, 3 Reg't U. S. Col'd Infantry.

Appears on

Company Muster Roll

for Nov & Dec, 1864.

Present or absent Present

Stoppage, $ ---- 100 for ----

Due Gov't, $ ---- 100 for ----

Remarks: St p for 1 Screw driver. Free on or before April 19/61

Book mark:

J W Hosley

(358) Copyist

NARA1297

Mc | 3 | U.S.C.T.

Richard McIntire

Corp, Co. D, 3 Reg't U. S. Col'd Infantry.

Appears on

Company Muster Roll

for Jany & Feb, 1865.

Present or absent Present

Stoppage, $ 100 for

Due Gov't, $ 100 for

Remarks: Stop for 1 Screw driver 1 Cap Bugle 1 Letter,
Free on or before April 19/61

Book mark:

(358) J H Schooley
Copyist

NARA1298

Mc | 3 | U.S.C.T.

Richard McIntire

Cpl, Co. D, 3 Reg't U. S. Col'd Infantry.

Appears on

Company Muster Roll

for Mch & Apl, 1865.

Present or absent Present

Stoppage, $ 100 for

Due Gov't, $ 100 for

Remarks: Stop 1 - screw Driver, 1 cup Bugle, 1 letter
Free on or before Apl. 19 - 61.

Book mark:

Kugler

Copyist

(358)

NARA1299

Mc | 3 | U.S.C.T.

Richard McIntire

Cpl., Co. D, 3 Reg't U. S. Col'd Infantry.

Appears on

Company Muster Roll

for May & June, 1865.

Present or absent Present

Stoppage, $____ 100 for ____

Due Gov't, $____ 100 for ____

Remarks: Stop 1 screw driver, 1 cap bugle, & letter

Free on or before Apl. 19 '61

NEXT ROLL ON FILE MUSTER OUT.

NEXT ROLL ON FILE MUSTER OUT

Book mark: ____

Knoyler

(358) Copyist

Mc | 3 | U.S.C.T.

Richard McIntire

Corp., Co. D, 3 Reg't U. S. Col'd Infantry.

Appears on **Co. Muster-out Roll,** dated Jacksonville Fla. Oct 31, 1865.

Muster-out to date Oct 31, 1865.

Last paid to June 30, 1863.

Clothing account:

Last settled....., 186 ; drawn since $.....100

Due soldier $.....100; due U. S. $ 24 37/100

Am't for cloth'g in kind or money adv'd $.....100

Due U. S. for arms, equipments, &c., $ 6 93/100

Bounty paid $.....100; due $ 100 00/100

Remarks: Stoppage for lamp and Garrison Equip. .03 cents. Joined as private appointed Corp. July 7/63.

Book mark:

Kuglin

(361) Copyist.

Mc

McIntire, Richard

, Co. D 3 Reg't U.S.C. Inf

1 Inclosures.

Bed Cards	Final Statements
Burial Records	Furloughs or L. of A
Certs. of Dis. for Discharge	Med. Certificates
C. M. Charges	Med. Des. Lists
Descriptive Lists	Orders
Discharge Certificates	Pris. of War Record
Enlistment Papers	Resignations

Other papers relating to—

Admission to Hosp'l	Furlough or L. of A.
Casualty Sheet	Med. Examination
Confinement	Misc. Information
Contracts	Pay or Clothing
Death or Effects	Personal Reports
Desertion	Rank
Discharge from Hosp'l	Transfer to Hosp'l
Discharge from Service	Transfer to V. R. C.
Duty	Transportation
Dof S. Ref. Slip 1	

NARA1302

Statement of Service Reference Slip.

Office Pension

Claim No. Ctf. 806777

Richard McIntire
(Name.)

, Co. D , 3 Reg't U.S.C. Inf

To Med. Sec. ~~Div.~~ 3-9, 1917

For med. record.

No med. p.f.

Johnson
per E. F.

Statement furnished Mch 7, 1917

McD

Form No. 447—A. G. O.
Ed. Sept. 28-16—10,000.

NARA1383

G.R.K.

No medical record found

✓ 2 cards rec'd

[illegible]

McIntire, Thomas

Co F, 3 U.S. Col'd Inf.

Private | Private

CARD NUMBERS.

1	623-644	26	
2	623-5-24	27	
3	623-611	28	
4	623-669	29	
5	623-676	30	
6	623-642	31	
7	623-920	32	
8	623-994	33	
9	623-9066	34	
10	623-9140	35	
11	623-9216	36	
12	623-9300	37	
13	623-9392	38	
14	623-205-5-	39	
15	623-95-07	40	
16	9061123	41	
17	40756920	42	
18		43	
19		44	
20		45	
21		46	
22		47	
23		48	
24		49	
25		50	

Book Mark:

See also

S. 2517086 [illegible]
S. 2846326 [illegible]

NARA1306

Mc 3. | **U.S.C.T.**

Thomas McIntire

, Co. F, 3 Reg't U.S. Col'd Inft

Appears on

Company Descriptive Book

of the organization named above.

DESCRIPTION.

Age 21 years; height — feet — inches.

Complexion —

Eyes —; hair —

Where born —

Occupation —

ENLISTMENT.

When July 10, 1863.

Where Philada Penna

By whom Lt Col Wagner; term 3 y'rs.

Remarks: Mustered in by Capt Sergeant U.S.A. July 10. 1863.

(383g) R. Springsguth Copyist.

Mc | 3 | U.S.C.T.

Thomas McIntire

Pvt., Co. F, 3 Reg't U. S. Col'd Infantry.

Age 21 years.

Appears on

Company Muster-in Roll

of the organization named above. Roll dated Philada, Pa., Aug 10, 1863.

Muster-in to date July 10, 1863

Joined for duty and enrolled:

When July 10, 1863.

Where Philadelphia, Pa.

Period 3 years.

Remarks:

Book mark:

(856) Beck
Copyist.

Mc | 3 | U.S.C.T.

Thomas McIntire

Priv., Co. F, 3 Reg't U. S. Col'd Infantry.

Appears on

Company Muster Roll

for Aug 10 to 31, 1863.

Present or absent Present

Stoppage, $ 100 for

Due Gov't, $ 100 for

Remarks: Due U.S. on Canteen value 44 cts.

Book mark:

Beck

(358) Copyist

Mc | 3 | U.S.C.T.

Thomas McIntire

Pvt., Co. F, 3 Reg't U. S. Col'd Infantry.

Appears on

Company Muster Roll

for Sept. & Oct, 1863.

Present or absent Present

Stoppage, $ 100 for

Due Gov't, $ 100 for

Remarks:

Book mark:

Beck

(858) Copyist

Mc | 3 | U.S.C.T.

Thomas McIntire

Priv, Co. F, 3 Reg't U. S. Col'd Infantry.

Appears on

Company Muster Roll

for Nov & Dec, 1863.

Present or absent Present

Stoppage, $ 100 for

Due Gov't, $ 100 for

Remarks:

Book mark:

Beck

(258) Copyist

Mc | 3 | U.S.C.T.

Thomas McIntire

Priv., Co. F, 3 Reg't U. S. Col'd Infantry.

Appears on

Company Muster Roll

for Jan & Feb., 1864.

Present or absent Present

Stoppage, $ 100 for

Due Gov't, $ 100 for

Remarks:

Book mark:

Beck

(358) Copyist

Mc | 3 | U.S.C.T.

Thomas McIntire

Priv., Co. F, 3 Reg't U. S. Col'd Infantry.

Appears on

Company Muster Roll

for Mar & Apr, 1864.

Present or absent Present

Stoppage, $ 100 for

Due Gov't, $ 100 for

Remarks:

Book mark:

Beck

(858) Copyist

NARA1313

Mc | 3 | U.S.C.T.

Thomas McIntire

Pvt, Co. F, 3 Reg't U. S. Col'd Infantry.

Appears on

Company Muster Roll

for May & June, 1864.

Present or absent Present

Stoppage, $ .... 100 for ....

Due Gov't, $ .... 100 for ....

Remarks: ....

Book mark: ....

(358) C. B. Sayer Copyist

M.C. | 3 | U.S.C.T.

Thomas McGuire

Pvt, Co. F, 3 Reg't U. S. Col'd Infantry.

Appears on

Company Muster Roll

for July & August, 1864.

Present or absent +

Stoppage, $ 100 for

Due Gov't, $ 100 for

Remarks: Free man before 19 April 1861 Hospital attendant Genl Hospital Jacksonville Fla by order dated July 5-1864 detached since

+ Name appears in column of names present cancelled by line drawn through it

Book mark:

L B Sayer

(858) Copyist

NARA1315

Mc | 3 | U.S.C.T.

Thomas McIntire

Pvt., Co. F, 3 Reg't U. S. Col'd Infantry.

Appears on

Company Muster Roll

for Sept & Oct, 1864.

Present or absent Present

Stoppage, $ 48/100 for Ordnance

Due Gov't, $ /100 for

Remarks: Free - Paid but 7.00 per mo from Enlistment to April 30-64 Back Pay due

Book mark:

C. B. Sayer

(858) Copyist

NARA1316

Mc | 3 | U.S.C.T.

Thomas McIntire

Pvt, Co. F, 3 Reg't U. S. Col'd Infantry.

Appears on

Company Muster Roll

for Nov & Dec, 1864.

Present or absent Present

Stoppage, $ 43/100 for Ordnance

Due Gov't, $ /100 for

Remarks: + ~~Free~~ Paid but $7.00 per month from enlistment to Apl 30-64 back pay due - Stop one month pay by order of Regimental Court Martial + Free on or before April 19-1861

Book mark:

C. B. Sayer

(358) Copyist

Mc | 3 | U.S.C.T.

Thomas McIntire

Pvt, Co. F, 3 Reg't U. S. Col'd Infantry.

Appears on

Company Muster Roll

for Jany & Feby, 1865.

Present or absent Present

Stoppage, $ 43/100 for ordnance

Due Gov't, $ /100 for

Remarks: Free on or before Apl 19 1861 - Paid at but $7.00 per month from enlistment to April 30-64 back pay due Stop one months pay as per sentence by Regtl court martial Dec 1864

Book mark:

(358)

G. B. Singer
Copyist

NARA1318

Mc | 3 | U.S.C.T.

Thomas McIntire

Pvt, Co. F, 3 Reg't U. S. Col'd Infantry.

Appears on

Company Muster Roll

for March & April, 1865.

Present or absent Present

Stoppage, $ 0 43/100 for Ord.

Due Gov't, $ ...... 100 for

Remarks: Free on or before April 19/61
Paid But $7.00 per Month
from enlistment to April 30/64
Back Pay due.

Book mark:

S. W. Tucker
Copyist

(358)

NARA 1319

Mc | 3 | U.S.C.T.

Thomas McIntire

Pvt, Co. F, 3 Reg't U. S. Col'd Infantry.

Appears on

Company Muster Roll

for May & June, 1865.

Present or absent Present

Stoppage, $0. 43/100 for Ord

Due Gov't, $ ___ 100 for

Remarks: Free on or before Apr 19 '61
Paid but $7.00 per Month
from enlistment to Apr 30 '64
Back Pay due.
Stop One Months pay by
order of Regtl Court Martial

NEXT ROLL ON FILE MUSTER OUT.

Book mark:

(358)

S. W. Tucker
Copyist

Mc 3 U.S.C.T.

Thomas McIntire*

Pvt., Co. F, 3 Reg't U. S. Col'd Inf.

Appears on Returns as follows:

July 1864 - Absent sick in Hospital, Jacksonville, Fla. since June '64

Aug. & Sept. 1864 - Absent Hosp Attendant

Oct. 1864 - On duty Hospital Attendant per S.O. 79 Regtl. Hd. Qrs. Oct. 23. '64.

Nov. 1864 - Absent in arrest since Nov. 8. '64.

*Name appears also as James McIntire

Book mark:

O. T. Taylor.

(546) Copyist.

NARA 1321

Mc	3	U.S.C.T.

Thomas McIntire

Pvt, Co. I, 3 Reg't U. S. Col'd Infantry.

Appears on **Co. Muster-out Roll,** dated

Jacksonville Fla Oct 31, 1865.

Muster-out to date ...., 186 .

Last paid to June 30, 1865.

Clothing account:

Last settled ...., 186 ; drawn since $...... 100

Due soldier $............ 100; due U. S. $ 1 03/100

Am't for cloth'g in kind or money adv'd $...... 100

Due U. S. for arms, equipments, &c., $ 6 00/100

Bounty paid $............ 100; due $ 100 00/100

Remarks: Stopd $4.90 for C. & G. E.

Enrolled as Private

Discharged; To remain in

the State Under G. O. No 10. Mil

Div of the Gulf. Not paid

on this roll

Book mark: 131. 956. 1622. Dis Apr 23/68

S. V. Tucker
Copyist.

(361)

Mc | 3 | U.S.C.T.

Thomas McIntire

Private, Co. F, 3 Reg't U. S. Col'd Infantry.

Appears on a

Detachment Muster-out Roll

of the organization named above. Roll dated Jacksonville, Fla., Oct 31, 1865.

Muster-out to date Oct 31, 1865.

Last paid to June 30, 1865

Clothing account:

Last settled ....., 186 ; drawn since $..... 100

Due soldier $..... 100; due U. S. $..... 100

Am't for cloth'g in kind or money adv'd $ 4 90/100

Due U. S. for arms, equipments, &c., $ 6 100

Bounty paid $..... 100 due $ 100 100

Remarks: Private since Enlistment. Mustered out in obedience to Circular No. 44 War Dept. A. G. O. 1865 and G.O. No. 10 Mil. Div. of the Gulf - his services being no longer required.

Book mark:

O. J. Markle,
Copyist.

(349)

McIntire, Thomas

P, Co. F, 3 Reg't U. S. C. T.

7 Enclosures.

Bed Cards	Final Statements
Burial Records	Furloughs or L. of A
Certs. of Dis. for Discharge	Med. Certificates
C. M. Charges	Med. Des. Lists
Descriptive Lists	Orders
Discharge Certificates	Pris. of War Record
Enlistment Papers	Resignations

Other papers relating to—

Admission to Hosp'l	Furlough or L. of A
Casualty Sheet	Med. Examination
Confinement	Misc. Information 7
Contracts	Pay or Clothing
Death or Effects	Personal Reports
Desertion	Rank
Discharge from Hosp'l	Transfer to Hosp'l
Discharge from Service	Transfer to V. R. C.
Duty	Transportation

Office Post Hospital
Jacksonville Fla
Nov 3d 1864

A. M. Barnes
Surgeon 3d U. S. C. T
In charge Post Hospital

Letter of transmittal
enclosing charge and specification
preferred against Thomas McIntyre
Co. I 3d Regt U. S. C. T.

Post Hospital Jacksonville Fla
Nov 3d 1864

Capt Young
Provost Marshall
Jacksonville

Sir

I have the honor to transmit herewith Charge and Specification preferred against Thomas McIntyre private Co H 3d Regt U.S.C.T. now in arrest under your care.

Very Respectfully
A. M. Barnes
Surgeon 3d Regt U.S.C.T.
In charge Post Hospital

Charges & Defs.

Hd. Qurs. 3rd U.S. C.T.
Jacksonville Fla.
Nov 5th 1864

Tilghman. B. C.
Col comdg 3rd U.S. C.T.

Requests that Sh McIntire
be sent to him for trial

Head Qrs 3d U.S. C.T.
Jacksonville Fla Nov. 5th 1864

Capt P. F. Young
Provt Marshal.

Sir:

The General Comdg D.F. has ordered that Priv Thomas McIntire, who is in your Charge, be tried by Field Officers court. I respectfully request that he may be sent under guard to these Head Quarters.

Very respectfully
Your Obt Servt
B. C. Tilghman
Col 3d U.S.C.T.

Adj't. Office 3rd U.S.C.T.
Jacksonville Fla
Nov 7th 1864.

Marseilles Sam'l. B.
Adj't 3rd U.S.C.T.

Receipts for Prisoners.

Thomas McIntire
Co "F," 3, U.S. C.T.

NARA1329

Head Quarters 3rd U.S. C.T.
Jacksonville Fla Nov. 7th 1864

Lieut:

I have the honor to acknowledge receipt of Pvt Thomas McIntosh Co F 3rd U.S.C.T. from Provost Marshal. L.O.F.

Very Respectfully
Your Obt Servt
Saml B. Marseilles
1st Lt and Adjutant

Lieut. M. H. Rice
Asst Provost Marshal
L.O.F.

NARA 1338

1

Adj^ts Office 3rd U.S.C.T.
Jacksonville Fla
Nov 7th 1864.

Marseilles Saml. S.
Adj^t 3rd U.S.C.T.

Sends request for Priv
Thomas McIntire Co F
3rd U.S.C.T.

Head Qrs 3d N.S.C.T.
Jacksonville Fla. Nov. 7th 1864

Capt P. F. Young
Pro. Mar.

Sir.

Private Thomas McIntire Co F. of this Regt has not been received at these Head Qrs by request of Col Tilghman. Saturday. The Col. requests that he be sent here immediately for trial.

Very Respectfully
Your Obt Svnt.
Daniel S. Marseilles
Adjutant.

Hd. Qrs. 3rd U.S.C.T.
Jacksonville Fla
Nov. 16th 1864

Maxwell Saml. B.
1st Lieut & Adjutant,
Forwards the Sentence
of Priv Th McIntire

Head Quarters 3d U.S.C.T.
Jacksonville Fla. Nov. 11th 1864.

(Abstract)

Private Thomas McIntire Co F. 3d U. S. C. T.
charged with, Theft— Tried before a Regimental
Court, by order of Brig. Genl. J. P. Hatch, found
Guilty and sentenced,

And the Court sentences him, Private Thomas
McIntire, Company F. 3d U.S.C.T. to forfeit one months
pay, and to be confined at hard labor in charge of
Provost Marshal, during one month,

Proceedings approved and sentence confirmed by Brig
Genl J. P. Hatch. Nov. 8th 1864,

Capt. P. F. Young
Provost Marshall,

Sir;

I have the honor to enclose
an abstract of the proceedings and sentence in the
case of Private Thomas McIntire Co F. 3d U.S.C.T. now
in your custody

Very Respectfully
Your Obt. Servt
Saml S Hamilles
Lieut. (2nd) Adjutant,

Hd Qrs. 3rd U.S.C.T.
Jacksonville Fla
Dec. 9, /64

Marseilles S. S.
Lieut & Adjt
forwards Receipt
for Prisoner.

Thomas McIntire
Co. F. 3 U.S.C.T.

Head Qrs 3d U.S.C.T.
Jacksonville Fla. Dec. 9th 1864

Sir

I have the honor to acknowledge receipt of Pvt Thomas McIntire Co F. of this Regiment lately in your Charge as a Prisoner.

Very respectfully
Your Obt Servt
Saml S Marsilles
Lt and Adjt
in absence of Col B.C. Tilghman

Lieut. W.W. Rice
Act Provost Marshal

Thomas M. Intire Pvt ✓
Co "F" 3rd U.S.C.T.

Div of D Commands
Answer inquiry

NARA 1337

Adjutant General's Office,

COLORED TROOPS BRANCH,

Mr Ellerbrook

January 11th, 1876

Vol. C. T., 187

Wanted in the case of Thomas McIntire Private, Co. "F",

Third Reg't U. S. C. Troops

Cause of arrest & record of trial

"Absent in arrest since Nov 8th 1864" - R R for Nov 1864

Present for duty - "Stop one months pay by order Regt Court Martial"

M R for Nov & Dec 1864

H. J. G.

Respectfully,

E. A. Woodward
J. F. H. Chief Clerk.

Adjutant General's Office,

Div. of Discontinued Comds.

Jan 24, 1876

Vol. 14 C. T., 187

Reply in case of Thomas McIntire, Co. F,

3 Reg't U. S. C. T.

Abstract of Order No not given H Q. 3 U. S. C. T. Nov. 11, 64

Charge — Theft — Findings — Guilty —

Sentence — To forfeit one months pay and be confined at hard labor in Charge of Pro. Marshal during one month. — Approved.

This order is not on file with records Dist. Fla. Hatch comdy. — M R B & Desc B give no information. —

Ch 17

NARA 1338

McKay, John Marcu

Co. G, 3 U.S. Col'd Inf.

Private Private

CARD NUMBERS.

1	6251663	26	
2	6251817	27	
3	62604840	28	
4	62605572	29	
5	62606553	30	
6	9061227	31	
7		32	
8		33	
9		34	
10		35	
11		36	
12		37	
13		38	
14		39	
15		40	
16		41	
17		42	
18		43	
19		44	
20		45	
21		46	
22		47	
23		48	
24		49	
25		50	

Book Mark:

See also

Mc | 3 | U.S.C.T.

John Marcus McKay

....., Co. G., 3 Reg't U. S. Col'd Inf.

Appears on

Company Descriptive Book

of the organization named above.

DESCRIPTION.

Age 34 years; height 5 feet 3½ inches.

Complexion Black

Eyes Black; hair Black

Where born Maryland

Occupation Laborer

ENLISTMENT.

When Jan. 19, 1865.

Where Morristown Pa. 6th Dist Pa.

By whom ; term 3 y'rs.

Remarks: Substitute

Daggett

(383u) Copyist.

NARA 1340

M | 3 | **U.S.C.T.**

John Marcus Mc Kay

Appears with rank of Pvt on

Muster in and Descriptive Roll of a Detachment of Substitutes forwarded

for the 3 Reg't U. S. Col'd Inf. Roll dated

Norristown Pa Jan, 1865

Where born Maryland

Age 34 y'rs; occupation Laborer

When enlisted Jan 19, 1865.

Where enlisted Norristown Pa

For what period enlisted 3 years.

Eyes Black; hair Black

Complexion Black; height 5 ft. 3½ in.

When mustered in Jan 19, 1865.

Where mustered in Norristown Pa

Bounty paid $ 100; due $ 100

Where credited

Company to which assigned G

Remarks: Substitute for Daniel H. Yackerback north Whitehall 59 Sub Dist. 6 Enroll Dist Pa

Book mark:

Davis
Copyist

(339)

NARA1341

M | 3 | U.S.C.T.

John Marcus McKay

Appears with rank of Pvt on

Muster and Descriptive Roll of a Detachment of Substitutes forwarded

for the 3 Reg't U. S. Col'd Inf. Roll dated Chelfin Hill Pa Camp Wm Penn, Feb 10, 1865.

Where born Md

Age 34 y'rs; occupation Laborer

When enlisted , 186 .

Where enlisted

For what period enlisted 3 years.

Eyes Blk; hair Blk

Complexion Blk; height 5 ft. 3 1/2 in.

When mustered in Jan 19, 1865.

Where mustered in Norristown Pa

Bounty paid $ 100; due $ 100

Where credited

Company to which assigned

Remarks: Sub for Daniel H. Jackenback N Whitehall 5-9 Sub. dist. 6 Cong dist.

Book mark:

(339) Sams Copyist

Mc | 3 | U.S.C.T.

John Marcus McKay

Pvt., Co. G, 3 Reg't U. S. Col'd Infantry.

Appears on

Company Muster Roll

for Mch. & Apr., 1865.

Present or absent Present

Stoppage, $ 100 for

Due Gov't, $ 100 for

Remarks:

Book mark:

Sandy.

Copyist

(858)

Mc | 3 | U.S.C.T.

John Marcus McKay

Pvt., Co. G, 3 Reg't U. S. Col'd Infantry.

Appears on

Company Muster Roll

for May and June, 1865.

Present or absent Present

Stoppage, $ 100 for

Due Gov't, $ 100 for

Remarks:

NEXT ROLL ON FILE MUSTER OUT.

Book mark:

(858)

Leary

Copyist

NARA1344

Mc	3	U.S.C.T.

John M McKay

Pri, Co. G, 3 Reg't U. S. Col'd Infantry.

Appears on **Co. Muster-out Roll,** dated

Jacksonville Fla, Oct. 31, 1865.

Muster-out to date Oct. 31, 1865.

Last paid to June 30, 1865.

Clothing account:

Last settled ...., 186 ; drawn since $...... $\frac{}{100}$

Due soldier $........ $\frac{}{100}$; due U. S. $ 16 $\frac{15}{100}$

Am't for cloth'g in kind or money adv'd $...... $\frac{}{100}$

Due U. S. for arms, equipments, &c., $........ $\frac{}{100}$

Bounty paid $........ $\frac{}{100}$; due $........ $\frac{}{100}$

Remarks: Stop for Ordnance $6.00.

Private from enlistment.

Book mark: 2841 R&P Apr 16, 66

J. H. Stearns
Copyist.

(361)

1st

McKenny Perry

Co. K, 3 U.S. Col'd Inf.

Private Private

CARD NUMBERS.

1 6225-1702	26
2 6261629	27
3 6261723	28
4 6261414	29
5 9061383	30
6	31
7	32
8	33
9	34
10	35
11	36
12	37
13	38
14	39
15	40
16	41
17	42
18	43
19	44
20	45
21	46
22	47
23	48
24	49
25	50

Book Mark:

See also

NARA1346

5-903917 Pleret
Rep 478459
A.G. 1488556
Hlo. reprd. 10-28-41 CLH

Md | 3 | U.S.C.T.

Perry McKenny

....., Co. H., 3 Reg't U. S. Col'd Inf.

Appears on

Company Descriptive Book

of the organization named above.

DESCRIPTION.

Age 21 years; height 5 feet 6½ inches.

Complexion Blk

Eyes Blk; hair Blk

Where born Virginia

Occupation Farmer

ENLISTMENT.

When Jan. 19, 1865.

Where Easton Pa. 11th Pa. Dist.

By whom ....; term 1 y'rs.

Remarks: Substitute

Daggett

(383g) Copyist.

NARA1348

M | 3 | U.S.C.T.

Percy McKenny

Appears with rank of Pvt on

Muster in and Descriptive Roll of a Detachment of Substitutes forwarded

for the 3 Reg't U. S. Col'd Inf. Roll dated
Chelten Hills Pa
Camp Wm Penn, Feb 10, 1865.

Where born Virginia

Age 21 y'rs; occupation Farmer

When enlisted , 186 .

Where enlisted

For what period enlisted one years.

Eyes Blk; hair Blk

Complexion Blk; height 5 ft. 6 1/2 in.

When mustered in Jan 19, 1865.

Where mustered in Easton Pa

Bounty paid $ 100; due $ 100

Where credited

Company to which assigned

Remarks: Substitute for Robt Beidleman, Williams Tp 11 Cong Dist 24 Sub Dist Pa

Book mark:

Sawis
Copyist

(339)

Mc | 3 | **U.S.C.T.**

Perry McKenny,

Pvt, Co. H, 3 Reg't U.S. Col'd Inf.

Appears on

Company Muster Roll

for Mar. & Apr, 1865

Present or absent Present.

Stoppage, $ 100 for

Due Gov't, $ 100 for

Remarks:

Book mark:

Pal

(858) *Copyist*

M. | 3 | U.S.C.T.

Perry McKenny.

Pvt., Co. H, 3 Reg't U. S. Col'd Infantry.

Appears on

Company Muster Roll

for May & June, 1865.

Present or absent Present.

Stoppage, $ ..... 100 for .....

Due Gov't, $ ..... 100 for .....

Remarks: .....

NEXT ROLL ON FILE MUSTER OUT.

Book mark: .....

(358)

Copyist

NARA 331

Mc. | 3 | U.S.C.T.

Perry McKenney,

Pvt., Co. H, 3 Reg't U. S. Col'd Infantry.

Appears on **Co. Muster-out Roll,** dated Jacksonville Fla, Oct. 31, 1865.

Muster-out to date Oct. 31, 1865.

Last paid to June 30, 1865.

Clothing account:

Last settled ....., 186 ; drawn since $ 100

Due soldier $ 17. 37/100; due U. S. $ 100

Am't for cloth'g in kind or money adv'd $ 100

Due U. S. for arms, equipments, &c., $ 6. 00/100

Bounty paid $ ..... 100; due $ 100

Remarks: Print from enrollment.

Book mark: V225.P.171.76.507.003.

Pol

(361) Copyist.

NARA1352

McKinney Percy

, Co. , Reg't 4 U.S.C.T.

1 Enclosures.

Bed Cards		Final Statements	
Burial Records		Furloughs or L. of A.	
Certs. of Dis. for Discharge		Med. Certificates	
C. M. Charges		Med. Des. Lists	
Descriptive Lists		Orders	
Discharge Certificates		Pris. of War Record	
Enlistment Papers	1	Resignations	

Other papers relating to—

Admission to Hosp'l		Furlough or L. of A.	
Casualty Sheet		Med. Examination	
Confinement		Misc. Information	
Contracts		Pay or Clothing	
Death or Effects		Personal Reports	
Desertion		Rank	
Discharge from Hosp'l		Transfer to Hosp'l	
Discharge from Service		Transfer to V. R. C.	
Duty		Transportation	

DECLARATION OF SUBSTITUTE.

I, Perry McKinney Coe desiring to ENLIST in the Army of the United States, for ~~THREE~~ One YEARS, *Do declare,* That I am Twenty Two years and .... months of age; that I have never been discharged from the United States service on account of disability or by sentence of a court martial; and I know of no impediment to my serving honestly and faithfully as a soldier for ~~three~~ One years.

GIVEN at Easton Penna
the Nineteenth day of January 1865

WITNESS:

Sam Yohe

Perry His X Mark McKinney Coe
Witness Mark
E. A. Depew

---

2 M. V. C. Inf / M/65 24

No. ____

Perry McKinney Coe

Enlisted at Easton Penna

As Substitute for

Robert Riddleman

On the 19th day of January 1865.
In Anticipation of Draft

By

Capt Samuel Yohe Pro Mar
H. C. Wolfe Com
E. H. Humphrey Surgeon

Board of Enrollment,

11th Dist. of Penna
Not Entitled to Co. Bounty
Credit 24th Sub Dist.
11th Cong Dist
Penna

NARA1354

(No. 39.)

SUBSTITUTE

VOLUNTEER ENLISTMENT.

STATE OF Pennsylvania TOWN OF Easton

I, Perry McKinney (Col born in the State of Virginia, aged Twenty Two years, and by occupation a Farmer Do HEREBY ACKNOWLEDGE to have agreed with Robert Beidleman, Esq., of Williams Tsp Northampton County 11th Cong Dist Penna to become his **SUBSTITUTE** in the Military Service, for a sufficient consideration paid and delivered to me, on the Nineteenth day of January, 1865; and having thus agreed with said Robert Beidleman, I DO HEREBY ACKNOWLEDGE to have enlisted this Nineteenth day of January, 1865, to serve as a ***Soldier*** in the **Army of the United States of America**, for the period of ~~THREE~~ One *YEARS*, unless sooner discharged by proper authority: I do also agree to accept such bounty, pay, rations, and clothing, as are, or may be, established by law for soldiers. And I do solemnly swear that I will bear true and faithful allegiance to the ***United States of America;*** that I will serve them honestly and faithfully against all their enemies or opposers whomsoever; and that I will observe and obey the orders of the President of the United States, and the orders of the Officers appointed over me, according to the Rules and Articles of War.

SWORN and subscribed to, at Easton Penna this Nineteenth day of January 1865.

BEFORE Sam'l Yohe
Pro Mar

Perry his X mark McKinney (Col

Witness Mark
C. A. Depew

We certify, on honor, That we have carefully examined the above-named Volunteer Substitute agreeably to the Regulations, and that, in our opinion, he is free from all bodily defects and mental infirmity which would in any way disqualify him from performing the duties of a soldier; that he was entirely sober when enlisted; that he is of lawful age, (not under 18 years;) and that, in accepting him as duly qualified to perform the duties of an able-bodied soldier, and as a Substitute in lieu of Robert Beidleman, ~~drafted in~~ Enrolled in Williams Tsp In Anticipation of Draft ~~186~~, we have strictly observed the Regulations which govern in such cases. This soldier has Black eyes, Black hair, Black complexion; is Five feet Six ½ inches high.

Sam'l Yohe
Provost Marshal.

Henry C Wolfe
Commissioner of Board.

C H Humphrey
Surgeon of Board.

Board of Enrollment of 11th *Dist. of* Penna

785

McPherson, John

Co. K, 3 U.S. Col'd Inf.

Private | Private

CARD NUMBERS.

1	6 2 6 3 0 4 3	26	
2	6 2 6 3 1 5 9	27	
3	6 2 6 3 2 4 2	28	
4	6 2 6 3 3 2 6	29	
5	6 2 6 3 4 0 2	30	
6	6 2 6 3 4 4 0	31	
7	6 2 6 3 7 7 5	32	
8	6 2 6 3 5 5 5	33	
9	6 2 6 3 6 2 7	34	
10	6 2 6 3 6 9 9	35	
11	6 2 6 3 4 5 0	36	
12	6 2 6 3 9 3 6	37	
13	6 2 6 4 0 2 4	38	
14	6 2 6 4 1 7 2	39	
15	9061549	40	
16		41	
17		42	
18		43	
19		44	
20		45	
21		46	
22		47	
23		48	
24		49	
25		50	

Book Mark:

See also

Mo. 3 U.S.C.T.

John McPherson

, Co. K, 3 Reg't U. S. Col'd Inf.

Appears on

Company Descriptive Book

of the organization named above.

DESCRIPTION.

Age 22 years; height 5 feet 10½ inches.

Complexion Black

Eyes Black; hair Black C.

Where born Allegheny Co. Md.

Occupation Farmer

ENLISTMENT.

When July 23, 1863.

Where Phila. Pa.

By whom Lt. Col. Wagner, term 3 y'rs.

Remarks: Died Aug. 26" 1865 - of Wounds Accidentally received.

Daggett

(383g) Copyist.

Mc | 3 | U.S.C.T.

John McPherson

Pvt., Co. K, 3 Reg't U. S. Col'd Infantry.

Age 22 years.

Appears on

Company Muster-in Roll

of the organization named above. Roll dated Phila., Pa., Aug. 10, 1863

Muster-in to date July 23, 1863

Joined for duty and enrolled:

When July 23, 1863.

Where Phila., Pa.,

Period 3 years.

Remarks:

Book mark:

Hastie

(356) Copyist.

No. | 3 | U.S.C.T.

John McPherson,

Pvt., Co. K, 3 Reg't U. S. Colored Infantry.

Appears on

Company Muster Roll

for Aug. 10 to Aug. 31, 1863.

Present or absent Present.

Stoppage, $ 100 for

Due Gov't, $ 100 for

Remarks:

Book mark:

Hastie

(358) Copyist.

NARA1359

M | 3 | U.S.C.T.

John McPherson

Pvt, Co. K, 3 Reg't U. S. Colored Infantry.

Appears on

Company Muster Roll

for Sept. & Oct., 1863.

Present or absent Present

Stoppage, $ 100 for

Due Gov't, $ 100 for

Remarks:

Book mark:

Hastie.

(358) Copyist.

NARA 1360

McP | 3 | U.S.C.T.

John McPherson,

Pvt, Co. K, 3 Reg't U. S. Colored Infantry.

Appears on

Company Muster Roll

for Nov. & Dec., 1863.

Present or absent Present,

Stoppage, $..........100 for ....

Due Gov't, $..........100 for ....

Remarks: ....

Book mark: ....

(358) Haslee Copyist.

711c | 3 | U.S.C.T.

John McPherson

Pvt., Co. K, 3 Reg't U. S. Colored Infantry.

Appears on

Company Muster Roll

for Jan. + Feb., 1864.

Present or absent Present.

Stoppage, $ 100 for

Due Gov't, $ 100 for

Remarks: Stop for ordnance $0.20; for camp equipments $0.44

Book mark:

Hastie.

(358) Copyist.

Mc | 3 | U.S.C.T.

John McPherson

Pvt., Co. K, 3 Reg't U. S. Colored Infantry.

Appears on

Company Muster Roll

for Mar & Apr, 1864

Present or absent Present

Stoppage, $ 100 for

Due Gov't, $ 100 for

Remarks:

Book mark:

Randolph

(358) Copyist.

Mc | 3 | U.S.C.T.

John McPherson

Pvt., Co. K, 3 Reg't U. S. Colored Infantry.

Appears on

Company Muster Roll

for Mar & Apr, 1864.

Present or absent Present

Stoppage, $ 100 for

Due Gov't, $ 100 for

Remarks: Pd $7 per month from enlist'd to Feb 29/64 Back pay due.

Book mark:

Randolph

(358) Copyist.

Mc | 3 | U.S.C.T.

John McPherson

Pvt., Co. K, 3 Reg't U. S. Colored Infantry.

Appears on

Company Muster Roll

for May & June, 1864

Present or absent Present

Stoppage, $ 100 for

Due Gov't, $ 100 for

Remarks:

Book mark:

Randolph

(358) Copyist.

Mc 3 U.S.C.T.

John McPherson

Pvt., Co. K, 3 Reg't U. S. Colored Infantry.

Appears on

Company Muster Roll

for July & Aug, 1864.

Present or absent Present

Stoppage, $ 100 for

Due Gov't, $ 100 for

Remarks: Free on or before Apr 19/61

Book mark:

Randolph

(358) Copyist.

Mc | 3 | U.S.C.T.

John McPherson

Pvt., Co. K, 3 Reg't U. S. Colored Infantry.

Appears on

Company Muster Roll

for Sept & Oct, 1864.

Present or absent Present

Stoppage, $ 100 for

Due Gov't, $ 100 for

Remarks: Paid $7.00 per month from enlistment to Feb 29/64 Back pay due.

Book mark:

(358) Copyist.

Mc | 3 | U.S.C.T.

John McPherson

Pvt., Co. K, 3 Reg't U. S. Colored Infantry.

Appears on

Company Muster Roll

for Jan & Feb, 186 5.

Present or absent Present

Stoppage, $ 100 for

Due Gov't, $ 100 for

Remarks: Paid $7 per month from Aug 1st to Feb 29/64 Back pay due

Book mark:

(358) Copyist.

M9 3 U.S.C.T.

John McPherson

Pvt., Co. K, 3 Reg't U. S. Colored Infantry.

Appears on

Company Muster Roll

for March & April, 1865.

Present or absent Present

Stoppage, $ 100 for

Due Gov't, $ 100 for

Remarks: Free on or before April 19th 1861. Paid but $7.00 per month from enlistment to Feb. 29th 1864. Back pay due

Book mark:

E. H. Hunter

(358) Copyist.

Mq 3 | U.S.C.T.

John McPherson

Pvt., Co. K, 3 Reg't U. S. Colored Infantry.

Appears on

Company Muster Roll

for May & June, 1865.

Present or absent Present

Stoppage, $ 100 for

Due Gov't, $ 100 for

Remarks: Free on or before April 19th 1861. Paid but $7.00 per month from enlistment to Feb. 29th 1864. Back pay due.

NEXT ROLL ON FILE MUSTER OUT.

Book mark:

E. H. Hunter

(358)

Copyist.

NARA1379

Mc | 3 | U.S.C.T.

John McPherson

Pvt., Co. K, 3 Reg't U. S. Col'd Infantry.

Appears on **Co. Muster-out Roll**, dated

Jacksonville, Fla, Oct. 31, 1865.

Muster-out to date ...., 186 .

Last paid to Feb. 28, 1865.

Clothing account:

Last settled ...., 186 ; drawn since $......100

Due soldier $..........100; due U. S. $..........100

Am't for cloth'g in kind or money adv'd $......100

Due U. S. for arms, equipments, &c., $..........100

Bounty paid $..........100; due $..........100

Remarks: Died at Jacksonville Fla. Aug. 26th 1865 of wounds accidentally received. Final statements and Inventory of effects for'd Aug 26th 1865.

Book mark: V. 140. P. 147. 72. 1119. 1879

(361) E. N. Hunter
Copyist.

McPherson, John

P, Co. 16, 3 Reg't Wisc.

2 Enclosures.

Bed Cards	Descriptive Lists
Burial Records	Final Statements /
Certs. of Dis. for Discharge	Furloughs
C. M. Charges	Med. Des. Lists
Med. Certificates	Orders

Other papers relating to—

Admission to Hosp'l	Furlough
Casualty Sheet (Officer's)	Med. Examination
Confinement	Misc. Information
Contracts	Pay or Clothing
Death or Effects /	Personal Reports
Desertions	Rank
Discharge from Hosp'l	Transfer to Hosp'l
Discharge from Service	Transfer to V. R. C.
Duty	Transportation

NARA1372

FINAL STATEMENT

20. Co "K"

OF

Private John McPherson

Co K 3d Reg't of U.S. C. Troops

VOLUNTEERS.

Died Aug 26. 1865.

NOTE 1.—*Two* of these certificates (or duplicates) are to be given to each Volunteer Soldier or drafted man who may be discharged previously to the discharge of his company, that he may at once receive from the Paymaster the pay, &c., due him, and the captain or other COMMISSIONED officer commanding the company will certify to the act of the delivery of the duplicate certificates; on these certificates the Soldier is "entitled to" his *discharge*, and should also present his discharge to the Paymaster to have the payment endorsed on it. The discharge is to be given back to the Soldier by the Paymaster; the latter only retaining as his voucher the duplicate certificates.

NOTE 2.—If the Soldier is entitled to pay for the use of his horse, the Company Commander will certify to that fact on the back of both these final statements, and also to the time he has pay due for having been so mounted on his own horse.

NOTE 3.—When a Soldier is furnished with final statements, his descriptive list, if he has one, should be taken up by the officer who gives the Soldier these statements, and endorsed with a statement to this effect by the officer. This endorsement should exhibit a full statement of the time for which the Soldier was allowed pay on his final statements, the clothing account, and all other charges against him or in his favor, so as to comprise a complete exhibit of his account. It will then be transmitted to the company commander of the Soldier, who will enter all the data necessary to a full understanding of the Soldier's account on the muster roll upon which the Soldier's discharge is reported. The descriptive list will then be destroyed. The object of this is, that the remaining portion of the Soldier's account may be settled upon the receipt of these muster rolls, and the Soldier receive any pay or allowances that may be due him at the time of his discharge, and which may not appear on his final statements from the fact that his descriptive list is incomplete. These accounts for back pay, &c., are settled by the 2d Auditor of the Treasury Department.

NOTE 4.—Charges for loss or injury to ordnance, horse equipments, and other miscellaneous charges, should appear under the heading of "Other Stoppages."

NOTE 5.—Bounty paid by State authorities, and not by the United States, will not be entered on this statement.

NOTE 6.—Amounts due the Sutler and Laundress must be entered on the muster roll on which the discharge, death, desertion, &c., is reported, as well as on the final statement, otherwise the amount cannot be collected from the United States.

NOTE 7.—This blank will be used for deceased volunteers and drafted men, as well as for others.

NOTE 8.—Where a Soldier dies in Hospital or on detached service, his descriptive list, if he has one, should be sent with his final statements, in duplicate, to the Second Auditor, Washington, D. C.

ADJUTANT GEN'LS OFFICE - RECEIVED - OCT 10 1865

Entd on C N of [illegible]

ADJUTANT GENERAL'S OFFICE.
Octo 10 1865.
Duplicate with Inventory sent 2d Auditor.

NARA1373

I certify, on honor, that John McPherson a Private of Captain Adam C. Nutt's Company ('K') of the 3d Regiment of U.S.C. Troops **VOLUNTEERS**, of the State of (Pa.), born in ....., State of Maryland, aged 22 years; 5 feet 10½ inches high; black complexion, black eyes, black hair, and by occupation a Farmer, having joined the company on its original organization at Phila Pa, and enrolled in it at the muster into the service of the United States at Phila Pa, on the 23d day of July, 1863, (~~or was mustered in service as a recruit, by ....., at ....., on the ..... day of ....., 186 , or was drafted and mustered into the service of the United States from the Enrollment District of the State of ....., at ....., on the ..... day of ....., 186 ,~~) to serve in the Regiment, ~~for~~ the term of three years: and having served **HONESTLY** and **FAITHFULLY** with his Company in the field to the present date, is now entitled to a **DISCHARGE** by reason of Death from wounds received accidentally in the Service.

The said John McPherson was last paid by Paymaster May Saunders to include the 28th day of February, 1865, and has pay due him from that time to the present date; he is entitled to pay and subsistence for **TRAVELING** to place of enrollment, and whatever other allowances are authorized to volunteer soldiers, drafted men, or militia, so discharged. He has received from the United States **CLOTHING** amounting to 39 $\frac{56}{100}$ dollars, since the 31st day of December, 1864, when his clothing account was last settled. ~~He has received from the United States ..... $\frac{}{100}$ dollars advanced **BOUNTY.**~~

~~There is to be stopped from him, on account of the State of ....., or other authorities, for **CLOTHING**, &c., received on entering service, ... $\frac{}{100}$ dollars; and for other stoppages, viz. ..... $\frac{}{100}$ dollars.~~

~~He has been furnished with **TRANSPORTATION** in kind from the place of his discharge to ....., and he has been **SUBSISTED** for **TRAVELING** to his place of enrollment, up to the ....., 186 .~~

~~He is indebted to ....., **SUTLER**, ... $\frac{}{100}$ dollars.~~

~~He is indebted to ....., **LAUNDRESS**, ... $\frac{}{100}$ dollars.~~

Given in Duplicate, at Jacksonville Fla, this 26th day of August, 1865.

Adam C. Nutt
Capt 3d U.S.C.T.
Commanding Company.

[A. G. O. No. 95—First.]

Post Hospital
Jacksonville Fla
Aug 26th 1865

A. M. Barnes
Surgeon 3d U. S. C. T
Post Surgeon

Report of Death of Private
John Mc Pherson. Co. K. 3d U.S.C.T.

Office Chief Med. Officer
Dist E. Fla.
Jacksonville Fla
Sept 3d 1865

Respectfully forwarded to
Surg. Hasson U.S.A. Medical
Director Dept. Fla.

Alonzo M. Barnes
Surg. 3d U.S.C.T.
Chief Med Officer
Dist. E. Fla

John Mc Pherson.
Co K. 3rd U. S. C. T.

Death

Post Hospital
Jacksonville Fla
Aug 26th 1865

P. W. Ashlegate Surg U.S. Vols
& Chief. medical. Officer. D. E. F.

Sir

I have the honor
to report that Privat John McPherson Co. K 3rd U.S. C.T.
died in this Hospital this morning of Tetanus

I am sir
very Respectfully
your obedt. servt
Alonzo M. Barnes.
Surgeon 3rd U.S.C.T
Post Surgeon

Melton, Joseph

Co. D, 3 U.S. Col'd Inf.

Corporal Private

CARD NUMBERS.

1	625-335-5-4	26	
2	625-3637	27	
3	625-37771	28	
4	625-3645-4	29	
5	625-3993 4	30	
6	625-4013	31	
7	625-4049	32	
8	625-4167	33	
9	625-4245-	34	
10	625-4324	35	
11	625-4403	36	
12	625-4449	37	
13	625-4564	38	
14	625-4709	39	
15	9060637	40	
16	M-27-C.J-1872	41	
17		42	
18		43	
19		44	
20		45	
21		46	
22		47	
23		48	
24		49	
25		50	

Book Mark: M. ~~22~~ 27. C. J. Oct. 72.

See also

NARA 1377

M | 3 | U.S.C.T.

Joseph Milton

B, Co. ..., 3 Reg't U. S. Col'd Inf.

Appears on

Company Descriptive Book

of the organization named above.

DESCRIPTION.

Age 20 years; height 5 feet 6 inches.

Complexion Yellow

Eyes brown; hair light

Where born Kinnett Penn

Occupation Engineer

ENLISTMENT.

When June 30, 1863

Where Philadelphia

By whom Lieut Wagner; term 3 y'rs.

Remarks: Discharged on account of Disability from Wounds July 11th 1865

Stevenson

(383g) Copyist.

W. | 3 | U.S.C.T.

Joseph Mettou

Corp., Co. B., 3 Reg't U. S. Col'd Infantry.

Age 21 years.

Appears on

Company Muster-in Roll

of the organization named above. Roll dated Phil. Pa., Aug. 7, 1863.

Muster-in to date June 30, 1863.

Joined for duty and enrolled:

When June 30, 1863.*

Where Phil. Pa.

Period 3 years.*

Remarks:

*☞ Muster-in roll shows enrollment of all men of this company as of same date and place. See enrollment on subsequent card or cards.

Book mark:

Martin

(356c) Copyist.

M | 3 | U.S.C.T.

Joseph Melton

Corp., Co. B, 3 Reg't U. S. Col'd Infantry.

Appears on

Company Muster Roll

for July & Aug, 1863.

Joined for duty and enrolled:

When June 30, 1863.*

Where Phila. Pa. *

Period 3 years.*

Present or absent Absent

Stoppage, $ 100 for

Due Gov't $ 100 for

Remarks: Apptd. Corp. July 4. 1863. Reduced to Ranks. Aug. 2. 63. Absent sick from Aug. 13. 63.

* See enrollment on card from muster-in roll.

Book mark:

Martin

(858c) Copyist.

M. | 3 | U.S.C.T.

Joseph Melton

Pvt., Co. B, 3 Reg't U. S. Col'd Infantry.

Appears on

Company Muster Roll

for Sept & Oct, 1863.

Joined for duty and enrolled:

When June 30, 1863.*

Where Phil. Pa. *

Period 3 years.*

Present or absent Absent.

Stoppage, $.....100 for.....

Due Gov't $.....100 for.....

Remarks: Absent sick at Camp Wm Penn, Pa. since Aug 13/63.

* ☞ See enrollment on card from muster-in roll.

Book mark:.....

Martin

(858c) Copyist.

M. | 3 | U.S.C.T.

Joseph Melton

Priv., Co. B, 3 Reg't U. S. Col'd Infantry.

Appears on

Company Muster Roll

for Nov. & Dec, 1863.

Joined for duty and enrolled:

When June 30, 1863.*

Where Phil., Pa.*

Period 3 years.*

Present or absent Present

Stoppage, $ 100 for

Due Gov't $ 100 for

Remarks: Pay due from date of original muster. Joined Company from Camp Wm Penn. Pa. Dec. 23. 1863.

* ☞ See enrollment on card from muster-in roll.

Book mark:

Martin

(358c) Copyist.

NARA1382

M | 3 | U.S.C.T.

Joseph Melton

Pvt, Co. B, 3 Reg't U. S. Col'd Infantry.

Appears on

Company Muster Roll

for Jan & Feb, 1864.

Joined for duty and enrolled:

When June 30, 1863.*

Where Phil. Pa. *

Period 3 years.*

Present or absent Present

Stoppage, $ 100 for

Due Gov't $ 100 for

Remarks:

* See enrollment on card from muster-in roll.

Book mark:

Martin

(358c) Copyist.

NARA1383

M	3	U.S.C.T.

Joseph Melton

Priv, Co. B, 3 Reg't U. S. Col'd Infantry.

Appears on

Company Muster Roll

for Mar & Apr., 1864

Joined for duty and enrolled:

When June 30, 1863*

Where Philadelphia Pa*

Period 3 years.*

Present or absent Present

Stoppage, $ 100 for

Due Gov't, $ 100 for

Remarks: Stop. for 1 Canteen(?)

* See enrollment on card from muster-in roll.

Book mark:

J. McFarley
Copyist.

(358c)

M | 3 | U.S.C.T.

Joseph Mellow

Priv., Co. B, 3 Reg't U. S. Col'd Infantry.

Appears on

Company Muster Roll

for May & June, 1864

Joined for duty and enrolled:

When June 30", 186 3.*

Where Philad. Pa *

Period 3 years.*

Present or absent Present

Stoppage, $ 100 for

Due Gov't, $ 100 for

Remarks:

* ☞ See enrollment on card from muster-in roll.

Book mark:

Washington

(358c) Copyist.

M | 3 | U.S.C.T.

Joseph Melton

Pvt., Co. B, 3 Reg't U. S. Col'd Infantry.

Appears on

Company Muster Roll

for May June July & Aug., 1864.

Joined for duty and enrolled:

When June 30, 1863.*

Where Philad. Pa.*

Period 3 years.*

Present or absent Absent

Stoppage, $ 100 for

Due Gov't $ 100 for

Remarks: Absent Wounded in G.H. at Jacksonville Fla. since Aug. 10th 1864

* ☞ See enrollment on card from muster-in roll.

Book mark:

Washington

(358c) Copyist.

M | 3 | U.S.C.T.

Joseph Mellow

Pvt., Co. B, 3 Reg't U. S. Col'd Infantry,

Appears on

Company Muster Roll

for Sept & Oct, 1864.

Joined for duty and enrolled:

When June 30th, 1863.*

Where Phila. Pa *

Period 3 years.*

Present or absent Absent

Stoppage, $ 100 for

Due Gov't $ 100 for

Remarks: Free on or before April 19th 1861. - Absent wounded in G.H. at Jacksonville since 10th Aug. 1864

* ☞ See enrollment on card from muster-in roll.

Book mark:

Washington

(358c) Copyist.

M | 3 | U.S.C.T.

Joseph Mellow

Priv, Co. B, 3 Reg't U. S. Col'd Infantry.

Appears on

Company Muster Roll

for Sept Oct Nov & Dec, 1864.

Joined for duty and enrolled:

When June 30, 1863.*

Where Phila Pa *

Period 3 years.*

Present or absent Absent

Stoppage, $ 100 for

Due Gov't $ 100 for

Remarks: Free on or before April 19th 1861. Absent wounded in G.H. Beaufort S.C. Since Aug 10th 1864

* ☞ See enrollment on card from muster-in roll.

Book mark:

Washburn Jone

(358c) Copyist.

M | 3 | U.S.C.T.

Joseph Mellow

Priv., Co. B, 3 Reg't U. S. Col'd Infantry.

Appears on

Company Muster Roll

for June Aug 31/64 to Feb 28, 1865.

Joined for duty and enrolled:

When June 30, 1863*

Where Phila Pa *

Period 3 years.*

Present or absent Absent

Stoppage, $ 100 for

Due Gov't $ 100 for

Remarks: Pvt on or before April 19th 1861. Due soldier dif pay $6 per mo. from Enrollment to Apr. 30th 1864. Absent Wounded in G. H. Beaufort S.C. since Aug 10th 1864

* ☞ See enrollment on card from muster-in roll.

Book mark:

Washington

(358c) Copyist.

NARA1389

M | 3 | U.S.C.T.

Joseph Melton

Priv, Co. B, 3 Reg't U. S. ~~Col'd~~ Inf

Appears on

Company Muster Roll

for Mch & Apl 1865.

Joined for duty and enrolled:

When June 30, 1863*

Where Phila, Pa *

Period 3 years.*

Present or absent Absent

Stoppage, $ ---- 100 for

Due Gov't, $ ---- 100 for

Valuation of horse, $ ---- 100

Valuation of horse equipments, $ ---- 100

Remarks: Free on or before Apl 19/61. Absent wounded in G.H. Beaufort, S.C. since Aug 10/64

*See enrollment on card from muster-in roll.

Book-mark:

W. M. Jackson
Copyist.

(358c)

M | 3 | U.S.C.T.

Joseph Milton.

Pvt, Co. B, 3 Reg't U. S. Col'd Infantry.

Appears on

Company Muster Roll

for May & June, 1863.

Joined for duty and enrolled:

When June 30, 1863*

Where Phila. Pa.*

Period 3 years.*

Present or absent Absent.

Stoppage, $ 100 for

Due Gov't $ 100 for

Remarks: Freed on or before Apl 19 61. Absent sick in G. H. Beaufort S. C. since Aug. 10th 1864.

NEXT ROLL ON FILE MUSTER OUT.

* ☞ See enrollment on card from muster-in roll.

Book mark:

Calloway

(358c) Copyist.

NARA1391

M | 3 | U. S. C. T.

Joseph Melton

Pri., Co. B, 3 Reg't U. S. Col'd Inf.

Appears on **Co. Muster-out Roll,** dated

Jacksonville, Fla., Oct 31, 1865.

Muster-out to date ...., 186 .

Last paid to ...., 186 .

Clothing account:

Last settled ...., 186 ; drawn since $........ 100

Due soldier $........ 100; due U. S. $........ 100

Am't for cloth'g in kind or money adv'd $........ 100

Due U. S. for arms, equipments, &c., $........ 100

Bounty paid $........ 100 due $........ 100

Remarks: Enrolled as Corpl. Reduced to ranks Aug 2/63 Discharged the service for disability (on wounds received) June 11/65 Final statement given

Book mark M22. V9. C772.
over,

N M Jackson
Copyist.

(861)

HHH1392

JAN. 19
6254709
☆1891☆

P. V. 17, P. 107, 71.

M. | 3. | Wfe D.

Joseph Melton.

, Co. B, 3d Reg't Wfe Troops

NOTATION.

L.B. 18.168.

Book mark: M 27. C.T. 1872.

War Department,

Adjutant General's Office,

Washington, September 1st, 1885.

Discharged June 8th 1865. at 2d Div. Wfa. General Hospital Beaufort S.C.

A. M. Muzzy.

Copyist.

(438)

Mettow, Joseph

Pri. Co. B, 3 Reg't U.S.C. Inf.

2 Enclosures.

Bed Cards	Descriptive Lists
Burial Records	Final Statements
Certs. of Dis. for Discharge	Furloughs
C. M. Charges	Med. Des. Lists
Med. Certificates	Orders

Other papers relating to—

Admission to Hosp'l	Furlough
Casualty Sheet (Officer's) /	Med. Examination
Confinement	Misc. Information /
Contracts	Pay or Clothing
Death or Effects	Personal Reports
Desertions	Rank
Discharge from Hosp'l	Transfer to Hosp'l
Discharge from Service	Transfer to V. R. C.
Duty	Transportation

CASUALTY SHEET

No. .....

Joseph Mellon

Private of Company B

3rd Regiment of U.S.C.T.

State Volunteers.

NATURE OF CASUALTY.

Discharged June 8. 1865.

CASUALTY SHEET.

Name: Joseph Mellon

Rank: Private Company: B Regiment: 3d

Arm: U.S.C.T. State:

Nature of Casualty: Discharge

CAUSE OF CASUALTY—(NAME OF DISEASE, &C.)

DEGREE OF DISABILITY.

BY WHOM CERTIFIED.

DATE OF DISCHARGE, ~~DEATH, &c.~~

June 8, 1865

PLACE OF DISCHARGE, ~~DEATH, &c.~~

"Entered 2nd Div. G. H. Beaufort, S.C. Dec. 14/64 with G.S. wound of left leg, and was discharged the service June 8, 1865, in compliance with G.O. No 77, A.G.O."

BY WHOM DISCHARGED.

FROM WHAT SOURCE THIS INFORMATION WAS OBTAINED.

Report of Surgeon General, U.S.A., to Pension Office, dated Feby. 19, 1872 - in pension claim No. 163.422 (V 126,801)

REMARKS.

See M-258 $\frac{1}{313}$ Pension Register.

J. W. Brown,
Clerk.

(July 6/85.)

(170)

NARA1397

Mr Gibson:
Please report as to his whereabouts in July 1863. Respy., W. A., B
Jany. 26/88.

Mr. Pratt:
Co. orgn. roll dated July 11. '63. Philadelphia Pa. shows him mustered June 30, /63. by Capt Sargent U.S.A. No addl record of whereabouts found.
Respy.
[illegible]

E.D.A.G.O.
Mch 2 88
D

Joseph Mallow.
B. 3 U.S.C.T.

Melton, Thomas Jr.

Co. E, 3 U.S. Col'd Inf.

Private | Private

CARD NUMBERS.

1	625-3606	26	
2	625-3649	27	
3	625-3770	28	
4	625-3853	29	
5	625-3933	30	
6	625-4012	31	
7	625-4048	32	
8	625-4166	33	
9	625-4244	34	
10	625-4323	35	
11	625-4402	36	
12	625-4448	37	
13	625-4543	38	
14	625-4669	39	
15	9060689	40	
16		41	
17		42	
18		43	
19		44	
20		45	
21		46	
22		47	
23		48	
24		49	
25		50	

Book Mark:

See also

S. 2616067 O.O.
S.S. Co. Comm. Phila. Pa. Feb 23/22 aff

NARA 1430

M | 3 | U.S.C.T.

Thomas Milton

, Co. B, 3 Reg't U. S. Col'd Inf.

Appears on

Company Descriptive Book

of the organization named above.

DESCRIPTION.

Age 16 years; height 5 feet 7 inches.

Complexion Yellow

Eyes brown; hair brown

Where born Unknown Del.

Occupation Blacksmith

ENLISTMENT.

When June 30, 1863

Where Philadelphia

By whom Lt Col Wagner; term 3 y'rs.

Remarks:

Hewston

(383y) Copyist.

M. | 3 | U.S.C.T.

Thomas Melton Jr.

Priv., Co. B, 3 Reg't U. S. Col'd Infantry.

Appears on

Company Muster Roll

for July & Aug, 1863.

Joined for duty and enrolled:

When June 30, 1863.*

Where Phil Pa.,*

Period 3 years.*

Present or absent Absent.

Stoppage, $.....100 for.....

Due Gov't $.....100 for.....

Remarks: Absent without leave since Aug. 12/63. from camp in Pa.

* ☞ See enrollment on card from muster-in roll.

Book mark:

Martin

(358c) Copyist.

W. | 3 | U.S.C.T.

Thomas Melton Jr.

Priv, Co. B., 3 Reg't U. S. Col'd Infantry.

Age 19 years.

Appears on

Company Muster-in Roll

of the organization named above. Roll dated Phil, Pa, Aug 7, 1863.

Muster-in to date June 30, 1863.

Joined for duty and enrolled:

When June 30, 1863.*

Where Phil, Pa, *

Period 3 years.*

Remarks:

*☞ Muster-in roll shows enrollment of all men of this company as of same date and place. See enrollment on subsequent card or cards.

Book mark:

Martin

(356c) *Copyist.*

M. | 3 | U.S.C.T.

Thomas Melton Jr.,

Priv., Co. B, 3 Reg't U. S. Col'd Infantry.

Appears on

Company Muster Roll

for Sept & Oct, 1863.

Joined for duty and enrolled:

When June 30, 1863.*

Where Phila. Pa.,*

Period 3 years.*

Present or absent Present

Stoppage, $ 100 for

Due Gov't $ 100 for

Remarks: Pay due from date of original muster. Stoppage of ten dollars, account paid for apprehension as deserter.

* ☞ See enrollment on card from muster-in roll.

Book mark:

Martin

(858c) Copyist.

M. | 3 | U.S.C.T.

Thomas Melton Jr.

Priv., Co. B, 3 Reg't U. S. Col'd Infantry.

Appears on

Company Muster Roll

for Nov. & Dec, 1863.

Joined for duty and enrolled:

When June 30, 1863.*

Where Phil. Pa. *

Period 3 years.*

Present or absent Present

Stoppage, $ 100 for

Due Gov't $ 100 for

Remarks: Pay due from date of original muster. Stoppage of $10.00. cost of apprehension as deserter.

* ☞ See enrollment on card from muster-in roll.

Book mark:

Martin

(858c) Copyist.

NARA1405

M | 3 | U.S.C.T.

Thomas Melton Jr

Pvt, Co. B, 3 Reg't U. S. Col'd Infantry.

Appears on

Company Muster Roll

for Jan & Feb, 1864

Joined for duty and enrolled:

When June 30, 1863*

Where Phila Pa*

Period 3 years.*

Present or absent present.

Stoppage, $.....100 for

Due Gov't $.....100 for

Remarks: Apprehended as deserter. Sept 5. 63 returned to duty by order of Gen. Terry Dec 23. 63. Deserted Camp Wm Penn Pa.

* See enrollment on card from muster-in roll.

Book mark:

Loral

Geo Cramer
Copyist.

(358c)

NARA1406

JAN. 19
6253933
c1891☆

Aug 12 - Stoppage
of cost of ap-
prehension, ten
dollars.

NARA1407

M | 3 | U.S.C.T.

Thomas Melton Jr

Pvt, Co. B, 3 Reg't U. S. Col'd Infantry.

Appears on

Company Muster Roll

for Mar & Apl, 1864.

Joined for duty and enrolled:

When June 30, 1863.*

Where Philadelphia Pa.*

Period 3 years.*

Present or absent Present

Stoppage, $ 100 for

Due Gov't, $ 100 for

Remarks: Stk for 1 wiper

* See enrollment on card from muster-in roll.

Book mark:

J. M. Fairly

Copyist.

(358c)

M | 3 | U.S.C.T.

Thomas Mellow

Priv., Co. B, 3 Reg't U. S. Col'd Infantry.

Appears on

Company Muster Roll

for May & June, 1864.

Joined for duty and enrolled:

When June 30, 1863.*

Where Philad. Pa. *

Period 3 years.*

Present or absent Present

Stoppage, $ 100 for

Due Gov't, $ 100 for

Remarks:

* ☞ See enrollment on card from muster-in roll.

Book mark:

Washington

Copyist.

(358c)

M | 3 | U.S.C.T.

Thomas Melton

Priv., Co. B, 3 Reg't U. S. Col'd Infantry.

Appears on

Company Muster Roll

for May June July & Aug, 1864.

Joined for duty and enrolled:

When June 30, 1863.*

Where Philad. Pa *

Period 3 years.*

Present or absent Present

Stoppage, $ 100 for

Due Gov't $ 100 for

Remarks: Free on or before April 19th 1861

* ☞ See enrollment on card from muster-in roll.

Book mark:

Washington

(858c) Copyist.

NARA 1419

M	3	U.S.C.T.

Thomas Melton

Priv, Co. B, 3 Reg't U. S. Col'd Infantry.

Appears on

Company Muster Roll

for Sept & Oct, 1864.

Joined for duty and enrolled:

When June 30", 1863.*

Where Phila^d Pa *

Period 3 years.*

Present or absent Present

Stoppage, $ 100 for

Due Gov't $ 100 for

Remarks: Free on or before April 19" 1861. – Due soldier dif^c pay ($6 per Mo.) from June 29"/63 to Apr 30"/64

* See enrollment on card from muster-in roll.

Book mark:

Washington
Copyist.

(358c)

M | 3 | U.S.C.T.

Thomas Melton

Priv., Co. B, 3 Reg't U. S. Col'd Infantry.

Appears on

Company Muster Roll

for Sept Oct Nov & Dec, 1864.

Joined for duty and enrolled:

When June 30, 1863.*

Where Phila Pa *

Period 3 years.*

Present or absent Present

Stoppage, $ 100 for

Due Gov't $ 100 for

Remarks: Free on or before April 19th 1861. Stop for 1 wiper, 1 Cantin, 1 Haversack Due Soldier dif pay $16 per mo from June 29th 1863. to Apr 30 1864.

* ☞ See enrollment on card from muster-in roll.

Book mark:

W Austin Clerk

(358c) Copyist.

M | 3 | U.S.C.T.

Thomas Mellon

Pvt, Co. B, 3 Reg't U. S. Col'd Infantry.

Appears on

Company Muster Roll

for from Aug 31/64 to Feb 28, 1865.

Joined for duty and enrolled:

When June 30, 1863.*

Where Phila Pa *

Period 3 years.*

Present or absent Present

Stoppage, $ 100 for

Due Gov't $ 100 for

Remarks: Free on or before April 19th 1861. Slep for 1 Haversack 1 Canteen, 1 Wiper.
Due Soldier diff pay $6 per mo. from Enrollment to Apr. 30, 1864

* See enrollment on card from muster-in roll.

Book mark:

Washington

(858c) Copyist.

M | 3 | U.S.C.T.

Thomas Melton

Priv., Co. B, 3 Reg't U. S. Col'd Infantry.

Appears on

Company Muster Roll

for Mch & Apl, 1865.

Joined for duty and enrolled:

When June 30, 1863*

Where Phila, Pa.*

Period 3 years.*

Present or absent Present

Stoppage, $ 100 for

Due Gov't, $ 100 for

Remarks: Free on or before Apl 19/61 Due soldier dif pay $6 per mo from enrollment to Apl 30, 1864.

* See enrollment on card from muster-in roll.

Book mark:

W. M. Jackson

(358c) Copyist.

M | 3 | U.S.C.T.

Thomas Melton.

Pvt X, Co. B, 3 Reg't U. S. Col'd Infantry.

Appears on

Company Muster Roll

for May & June, 1865.

Joined for duty and enrolled:

When June 30, 1863.*

Where Phila. Pa.,*

Period 3 years.*

Present or absent Present.

Stoppage, $ 100 for 1 Knapsack, 1 canteen,

Due Gov't $ 100 for

Remarks: Due soldier dif. pay $6 per mo. from enrollment Apl 30, 1864. Free on or before Apl 19, 61.

NEXT ROLL ON FILE MUSTER OUT.

* See enrollment on card from muster-in roll.

Book mark:

Calloway.

(358c) Copyist.

M | 3 | U.S.C.T.

Thomas Melton

Prin., Co. B, 3 Reg't U. S. Col'd Infantry.

Appears on **Co. Muster-out Roll,** dated Jacksonville, Fla. Oct. 31, 1865.

Muster-out to date Oct. 31, 1865.

Last paid to June 30, 1865.

Clothing account:

Last settled....., 186 ; drawn since $.....100

Due soldier $.....100; due U. S. $ 32 89/100

Am't for cloth'g in kind or money adv'd $.....100

Due U. S. for arms, equipments, &c., $ 6 00/100

Bounty paid $.....100; due $ 100 100

Remarks: Private from enrollment.

Book mark:

N. M. Jackson

(361) Copyist

Marker, Arthur

Co F, 3 U.S. Col'd Inf.

Private Private

CARD NUMBERS.

1	625-1607	26	
2	625-9144	27	
3	625-9220	28	
4	625-9304	29	
5	625-9396	30	
6	625-9470	31	
7	9061126	32	
8		33	
9		34	
10		35	
11		36	
12		37	
13		38	
14		39	
15		40	
16		41	
17		42	
18		43	
19		44	
20		45	
21		46	
22		47	
23		48	
24		49	
25		50	

Book Mark:

See also

NARA1417

S638806 P.O.90
S. 770917 Req.
S. 1075133 P.O. mem.
Ref 459990
S 2635005 and wd

NARA1418

M. | 3. | U.S.C.T.

Arthur Mcrherd.

, Co. F, 3 Reg't U. S. Col'd Inft.

Appears on

Company Descriptive Book

of the organization named above.

DESCRIPTION.

Age 29 years; height 5 feet 8½ inches.

Complexion Black

Eyes Black; hair Black

Where born —— New Jersey

Occupation ——

ENLISTMENT.

When Sept. 9th, 1864.

Where W. Lebanon

By whom Maj. Whitt; term 2 y'rs.

Remarks: Mustered in by 3rd N. H. Sept. 7, 1864. - Substitute

R. Springgreth
(383g) Copyist.

M | 3 | **U.S.C.T.**

Arthur Merhero

Appears with rank of Pvt on

Muster and Descriptive Roll of a Detachment of Substitutes forwarded

for the 3 Reg't U. S. Col'd Inf. Roll dated Concord N. H., Oct 28, 1864.

Where born N. J.

Age 29 y'rs; occupation Laborer

When enlisted Sept 9, 1864.

Where enlisted N. Lebanon

For what period enlisted 3 years.

Eyes Black; hair Black

Complexion Black; height 5 ft. 8 1/4 in.

When mustered in Sept 9, 1864.

Where mustered in Concord

Bounty paid $ 100; due $ 100

Where credited

Company to which assigned

Remarks: Substitute for Horace H Whittington of Hanover N H.

Book mark:

Daniel

(339) Copyist

NARA1420

M | 3 | U.S.C.T.

Auther Merheel

Pri., Co. F, 3 Reg't U. S. Col'd Infantry.

Appears on

Company Muster Roll

for Nov & Dec, 1864.

Present or absent Present

Stoppage, $ ____ 100 for ____

Due Gov't, $ ____ 100 for ____

Remarks: Free on or before April 19-1861

Book mark: ____

C B Sawyer
Copyist

(858)

M | 3 | U.S.C.T.

Arthur Meshed.

Pri, Co. F, 3 Reg't U. S. Col'd Infantry.

Appears on

Company Muster Roll

for Jany & Feby, 1865.

Present or absent Present

Stoppage, $ 100 for

Due Gov't, $ 100 for

Remarks: Free man before Apl 19
1861 Pay due from enlist-
-ment Present

Book mark:

G B Sayer
Copyist

(358)

No. 3 U.S.C.T.

Arthur Manheret

Pvt, Co. F, 3 Reg't U. S. Col'd Infantry.

Appears on

Company Muster Roll

for March & April, 1865.

Present or absent Present

Stoppage, $ 100 for

Due Gov't, $ 100 for

Remarks:

Book mark:

S. W. Smith

Copyist

(258)

NARA1423

M | 3 | U.S.C.T.

Auther Merhered

Pvt, Co. F, 3 Reg't U. S. Col'd Infantry.

Appears on

Company Muster Roll

for May & June, 1865.

Present or absent Present

Stoppage, $ .... 100 for ....

Due Gov't, $ .... 100 for ....

Remarks: ....

EXT ROLL ON FILE MUSTER OUT.

Book mark: ....

(358)

S. W. Tucker
Copyist

NARA1424

N	3	U.S.C.T.

Arthur Markwood

Pvt, Co. F, 3 Reg't U. S. Col'd Infantry.

Appears on **Co. Muster-out Roll,** dated

Jacksonville Fla, Oct 31, 1865.

Muster-out to date Oct 31, 1865.

Last paid to June 30, 1865.

Clothing account:

Last settled ...., 186 ; drawn since $ 100

Due soldier $ 10 96/100; due U. S. $ 100

Am't for cloth'g in kind or money adv'd $ 100

Due U. S. for arms, equipments, &c., $ 6 00/100

Bounty paid $ ...... 100; due $ 100

Remarks: Enrolled as Private

Book mark:

S. W. Tucker
Copyist.

(361)

NARA1425

______, Co. ______, ______ Reg't ______

______ **Inclosures.**

Bed Cards ______	Final Statements ______
Burial Records ______	Furloughs or L. of A ______
Certs. of Dis. for Discharge ______	Med. Certificates ______
C. M. Charges ______	Med. Des. Lists ______
Descriptive Lists ______	Orders ______
Discharge Certificates ______	Pris. of War Record ______
Enlistment Papers ______	Resignations ______

Other papers relating to—

Admission to Hosp'l ______	Furlough or L. of A. ______
Casualty Sheet ______	Med. Examination ______
Confinement ______	Misc. Information ______
Contracts ______	Pay or Clothing ______
Death or Effects ______	Personal Reports ______
Desertion ______	Rank ______
Discharge from Hosp'l ______	Transfer to Hosp'l ______
Discharge from Service ______	Transfer to V. R. C. ______
Duty ______	Transportation ______
______	______

NARA1426

MICROFILM PUBLICATION M 1845

COMPILED MILITARY SERVICE RECORDS
OF VOLUNTEER UNION SOLDIERS WHO SERVED WITH
THE UNITED STATES COLORED TROOPS (USCT)
THIRD INFANTRY

PERSONAL PAPERS' TARGET SHEET

PLEASE NOTE THE CHECKED INFORMATION ABOUT THE PERSONAL PAPERS IN THIS FILE:

☐ NO PERSONAL PAPERS WERE FOUND IN THIS FILE WHEN THE RECORDS WERE ARRANGED FOR MICROFILMING.

☒ ___/___ PERSONAL PAPER(S) FOUND IN THIS FILE WHEN THE RECORDS WERE ARRANGED FOR MICROFILMING.

DECLARATION OF SUBSTITUTE.

I, Arthur Merhead desiring to ENLIST in the Army of the United States, for THREE YEARS, ***Do declare,*** That I am 29 years and ______ months of age; that I have never been discharged from the United States service on account of disability or by sentence of a court martial; and I know of no impediment to my serving honestly and faithfully as a soldier for three years.

GIVEN at West Lebanon
the 9th day of September 1864

WITNESS: [illegible signature] — Arthur his X mark Merhead

Co 7 33d [?] Ind

No. 1456

Arthur Merhead

Enlisted at West Lebanon

As Substitute for

Horace H. Withington [?]

On the 9th day of Sept, 1864

By

Christian Rice [?]

Francis A. Gaultman [?]

Dixi Crosby

Board of Enrollment,

3d Dist. of N.H.

April 1895. This paper was formerly filed in the Enrollment Div. R. & P.O.

14,95

(No. 39.)

SUBSTITUTE

VOLUNTEER ENLISTMENT.

STATE OF New Hampshire TOWN OF Lebanon

I, Arthur Merhead born in the State of New Jersey, aged 29 years, and by occupation a Laborer Do HEREBY ACKNOWLEDGE to have agreed with Horace H. Withington, Esq., of Hanover, Grafton County New Hampshire to become his **SUBSTITUTE** in the Military Service, for a sufficient consideration paid and delivered to me, on the 9th day of Sept, 1864; and having thus agreed with said Horace H. Withington I DO HEREBY ACKNOWLEDGE to have enlisted this 9th day of Sept, 1864, to serve as a ***Soldier*** in the **Army of the United States of America,** for the period of *THREE YEARS*, unless sooner discharged by proper authority: I do also agree to accept such bounty, pay, rations, and clothing, as are, or may be, established by law for soldiers. And I do solemnly swear that I will bear true and faithful allegiance to the ***United States of America;*** that I will serve them honestly and faithfully against all their enemies or opposers whomsoever; and that I will observe and obey the orders of the President of the United States, and the orders of the Officers appointed over me, according to the Rules and Articles of War.

SWORN and subscribed to, at West Lebanon this 9th day of Sept 1864 BEFORE Chester Pike Jus of the Peace

his Arthur mark Merhead

We certify, on honor, That we have carefully examined the above-named Volunteer Substitute agreeably to the Regulations, and that, in our opinion, he is free from all bodily defects and mental infirmity which would in any way disqualify him from performing the duties of a soldier; that he was entirely sober when enlisted; that he is of lawful age, (not under 18 years;) and that, in accepting him as duly qualified to perform the duties of an able-bodied soldier, and as a Substitute in lieu of Horace H. Withington Enrolled, drafted in July 1863, we have strictly observed the Regulations which govern in such cases. This soldier has Black eyes, Black hair, Black complexion; is 5 feet 8 1/4 inches high.

Chester Pike

Provost Marshal.

Francis A. Russell

Commissioner of Board.

Dix Crosby

Surgeon of Board.

Board of Enrollment of 3d *Dist. of* New Hampshire

Merritt, Charles A.

Co. A, 3 U.S. Col'd Inf.

Corporal Private

CARD NUMBERS.

1	6266076	26	
2	6266098	27	
3	6266920	28	
4	6261002	29	
5	6261082	30	
6	6261161	31	
7	6261238	32	
8	6261312	33	
9	6261386	34	
10	6261464	35	
11	6261541	36	
12	6261626	37	
13	6261720	38	
14	6261811	39	
15	9061358	40	
16	M-81-CJ-1869	41	
17		42	
18		43	
19		44	
20		45	
21		46	
22		47	
23		48	
24		49	
25		50	

Book Mark: M-81-CJ-1869

See also

M. | 3 | U.S.C.T.

Charles A. Merritt

....., Co. H; 3 Reg't U. S. Col'd Inf.

Appears on

Company Descriptive Book

of the organization named above.

DESCRIPTION.

Age 19 years; height 5 feet 6 inches.

Complexion Black

Eyes Black; hair Black

Where born Luzerne Co. Pa.

Occupation Barber

ENLISTMENT.

When July 20, 1863.

Where Phila. Penna.

By whom Lt Col Wagner; term 3 y'rs.

Remarks: Corporal. Appointed furlow of enlistment. Appointed Sergt. Sept. 20/63 Reduced to ranks Oct. 26/63 Left sick at Hilton Head S. C. Feb. 7/64 Returned to Co. March 6/64 Detailed as Hosp. nurse Jan. 6/64 See Gen. order No. 3 Ret. to duty in Co. during March/64 (over)

Diggett

(383y) Copyist.

MAY. 11 9061358 1891

Arrested June 15 1864
for mutiny. Tried by
G. C. Martial and sentenced
to serve at hard labor
during remainder of term
of service with ball and
chain and to lose all
pay due and to become
due

816 | 3 | U.S.C.T.

Charles A. Merritt

Corp., Co. H., 3 Reg't U. S. Col'd Infantry.

Age 21 years.

Appears on

Company Muster-in Roll

of the organization named above. Roll dated Philadelphia Pa July 25, 1863.

Muster-in to date July 20, 1863

Joined for duty and enrolled:

When July 20, 1863.

Where Phila d Pa

Period 3 years.

Remarks:

Book mark:

C. G. Smith

(356) Copyist.

M | 3 | U.S.C.T.

Charles[+] C. Merritt

Corp, Co. H, 3 Reg't U. S. Col'd Infantry.

Appears on

Company Muster Roll

for July 25 to Aug 31, 1863.

Present or absent Present

Stoppage, $ ____ 100 for

Due Gov't, $ ____ 100 for

Remarks:

+ appears in column of Present as Charles W. Merritt.

Book mark:

C G Smith
Copyist

(358)

No. 3 U.S.C.T.

Charles A. Merritt

Pri., Co. H, 3 Reg't U. S. Col'd Infantry.

Appears on

Company Muster Roll

for Sept & Oct, 1863.

Present or absent Present

Stoppage, $ 100 for

Due Gov't, $ 100 for

Remarks: Acted as Sergt. 36 days. Appointed from Corpl Sept. 20 - Reduced to ranks Oct. 26

Book mark:

C G Smith

(358) Copyist

M | 3 | U.S.C.T.

Chas. A. Merritt

Pri, Co. H, 3 Reg't U. S. Col'd Infantry.

Appears on

Company Muster Roll

for Nov & Dec, 1863.

Present or absent Present

Stoppage, $ 100 for

Due Gov't, $ 100 for

Remarks: Stop for Haversack

Book mark:

O G Smith

Copyist

(358)

Me | 3 | U.S.C.T.

Chas. A. Merritt

Pri, Co. H, 3 Reg't U. S. Col'd Infantry.

Appears on

Company Muster Roll

for Jan & Feb, 1864.

Present or absent Absent

Stoppage, $ 100 for

Due Gov't, $ 100 for

Remarks: Sick at Hilton Head since Feb 4 64. Dis. list given

Book mark:

C. Smith

(858)

Copyist

M | 3 | U.S.C.T.

Charles A. Merritt
Pvt., Co. H, 3 Reg't U. S. Col'd Infantry.

Appears on

Company Muster Roll

for March + April, 186 4

Present or absent Present

Stoppage, $ 100 for

Due Gov't, $ 100 for

Remarks:

Book mark:

W F Rogan
Copyist

(358)

In	3	U.S.C.T.

Charles A. Merritt

Pri., Co. H, 3 Reg't U. S. Col'd Infantry.

Appears on

Company Muster Roll

for May & June, 1864.

Present or absent Absent

Stoppage, $ 100 for

Due Gov't, $ 100 for

Remarks: Stop for 1 Cartridge box & plate, 1 Cartridge box - belt & plate, 1 Canteen In arrest since June 11, 1864

Book mark:

Henderson

(358) *Copyist*

M | 3 | U.S.C.T.

Charles A. Merritt

Pvt, Co. H, 3 Reg't U. S. Col'd Infantry.

Appears on

Company Muster Roll

for July & Aug., 1864

Present or absent Absent

Stoppage, $ 100 for

Due Gov't, $ 100 for

Remarks: In arrest at Provost Guard House Jacksonville, Fla., since June 15, 1864.

Book mark:

W F Rogan

(358) Copyist

M | 3 | U.S.C.T.

Charles A. Merritt

Pvt., Co. H, 3 Reg't U. S. Col'd Infantry.

Appears on

Company Muster Roll

for Sept. & Oct., 1864

Present or absent Absent

Stoppage, $ 100 for

Due Gov't, $ 100 for

Remarks: Serving out sentence of G.C.M. at Jacksonville, Fla., for arrest since June 15, 1864. Free.

Book mark:

W. F. Rogers

(358) Copyist

M | 3 | U.S.C.T.

Charles A. Merritt

Pvt., Co. H, 3 Reg't U. S. Col'd Infantry.

Appears on

Company Muster Roll

for Nov. & Dec., 1864.

Present or absent Absent

Stoppage, $ 100 for

Due Gov't, $ 100 for

Remarks: Serving out Sentence of G. C. M. at St. Augustine, Fla., on arrest since June 10, 1864.

Book mark:

W. P. Regan

Copyist

(358)

NARA1442

M | 3 | U.S.C.T.

Charles A. Merritt

Pvt., Co. H, 3 Reg't U. S. Col'd Infantry.

Appears on

Company Muster Roll

for Jany & Feby, 1865.

Present or absent Absent

Stoppage, $ 100 for

Due Gov't, $ 100 for

Remarks: Serving out sentence of G.C.M. at St. Augustine, Fla., In arrest since June 10, 1864.

Book mark:

(358)

W F Ragan
Copyist

M. | 3 | U.S.C.T.

Charles A. Merritt,

Pvt., Co. H, 3 Reg't U. S. Col'd Infantry.

Appears on

Company Muster Roll

for Mar. & Apr., 1865.

Present or absent Absent.

Stoppage, $ ..... 100 for .....

Due Gov't, $ ..... 100 for .....

Remarks: Serving out sentence of G. C. M. at Augustine Fla, since June 10th 1864.

Book mark:

Pul

(358) Copyist

M. | 3 | U.S.C.T.

Charles A. Merrit.

Pri., Co. H, 3 Reg't U. S. Col'd Infantry.

Appears on

Company Muster Roll

for May & June, 1866.

Present or absent Absent.

Stoppage, $ ..... 100 for .....

Due Gov't, $ ..... 100 for .....

Remarks: Serving out sentence G.C.M. at St. Augustine Fla. In arrest since June 10/64.

NEXT ROLL ON FILE MUSTER OUT

Book mark:

Pal

(358) Copyist

M. | 3 | U.S.C.T.

Charles F. Merrit

Pvt, Co. H, 3 Reg't U. S. Col'd Infantry.

Appears on **Co. Muster-out Roll,** dated Jacksonville Fla, Oct. 31, 1865.

Muster-out to date Oct. 31, 1865.

Last paid to Feb 28, 1864.

Clothing account:

Last settled....., 186 ; drawn since $.....100

Due soldier $ 16 43/100; due U. S. $.....100

Am't for cloth'g in kind or money adv'd $.....100

Due U. S. for arms, equipments, &c., $.....100

Bounty paid $ none 100; due $ 100 00/100

Remarks: Corpl at enrollment. apptd Sergt. Sept. 25/63. Reduced to ranks Oct. 26/63. Free on or before Apr. 19/61. arrested & tried. Charges. 1 Absent without leave. (over)

Book mark: M. 81. Vol. 7. B.T. 69. V. 140. P. 116. 72.

(361) Copyist.

JAN. 19

6261811

☆1891☆

2 Disobedience of order, 30 mutiny. Sentence. Ft. 2rs. dist. Fla. Jacksonville aug. 12/64. Gen. O. 48 (Extract) "To forfeit all pay now due or that may become due him. Released from Ft. Marion & returned to Regt. by S.O. No. 51. Dept. Fla., Sept. 29/65.

NARA1447

M 1 3rd U.S.C.T.

Charles A. Merritt

, Co. "H", 3rd Reg't U.S.C.T.

NOTATION.

Book mark: M. 81. C.T. 1869.

War Department,

Adjutant General's Office,

Washington, Feby 25th, 1869.

Discharge on file.

E. P. Cornazier. *Copyist.*

(438)

Merritt, Charles A.

P, Co. H, 3 Reg't U. S. C. T.

Enclosures.

Bed Cards	Final Statements
Burial Records	Furloughs or L. of A
Certs. of Dis. for Discharge	Med. Certificates
C. M. Charges	Med. Des. Lists
Descriptive Lists	Orders 1
Discharge Certificates	Pris. of War Record
Enlistment Papers	Resignations

Other papers relating to—

Admission to Hosp'l	Furlough or L. of A
Casualty Sheet	Med. Examination
Confinement 3	Misc. Information 4
Contracts	Pay or Clothing
Death or Effects	Personal Reports
Desertion	Rank
Discharge from Hosp'l	Transfer to Hosp'l
Discharge from Service	Transfer to V. R. C.
Duty	Transportation

Fort Hatch Jacksonville Fla
June 11th 1864

Truman Commant
Capt Comdg Comp H 3rd U S C T

Relating to the detention of Chas Merritt Comp H 3 U S C T

Chas Merritt

H. 3. U. S. C. T.

NARA1450

Fort Hatch Jacksonville Fla
June 11/64

Lieutenant:

Will you please confine at the Provost Guard House Private Charles A. Merritt sent with the bearer of this note. I have preferred Charges against him which will necessitate his trial by a Gen. Court Martial, he is a member of Co. "H." 3d U. S. C.

Respectfully
Your ob't servant
Sherman Conant
Capt comdg Co. "H" U. S. C.

To
Lt comdg Provost Guard.

Hd Qrs Dist of Fla Jacksonville
Aug 12/64

Genl Orders No 48

Findings & sentence of Chas A Merritt "H" Co 3rd N.S.C.T.
approved

subject to the approval of the General Comdg the Department

By order of
Brig Genl Wm Birney
(Signed) M. Bailey
Asst. Adjt Genl.

Official
R. H. Young Capt 107th U.S.C.T.
Provost Marshal District Fla.

Head Quarters Dist of Florida.
Jacksonville Fla. Aug 12th 1864.

General Orders.
No 48.
(Extract.)

* * *

Par V.

Charges against Priv Charles A Merritt Co H. 3rd U.S.C.Troops
Charge 1st Absence without leave.
Charge 2nd Disobedience of Orders.
Charge 3rd Mutiny.
Sentence.

The Court do therefore sentence him, Private Charles A Merritt Co H. 3rd U.S.C.T. "To forfeit all pay now due, or that may become due him, and to be confined at hard labor upon some government fortification, with a chain eight feet long and a twenty pound iron ball, attached to his left leg, for the balance of his term of enlistment."

* * *

The proceedings, finding, and sentence of the Court in case of Private Chas A Merritt Co. 3rd U.S.C.T. are approved. Fort Clinch is designated as the place of confinement

Invoice of Prisoner
Chas A Merritt
(colored)
3rd U.S.C.T

1862, 63. vi 64.

Office Provost Marshal Dist Fla
Jacksonville Fla Oct 27

Invoice of one enlisted man (Col) turned over by Capt. P. H. Young Provost Marshal Dist Fla to Capt Wilson French Pro Mar St Augustine Fla. to be confined in Fort Marian

No	Names	Co	Regt	Remarks
1	Charles ay Merritt	H	3 U.S.C.T.	To be confined in Fort Marian

Office Provost Marshal,
St. Augustine Fla June 1. 1865

To Whom it may Concern

I have the honor to state that the Conduct of Private "Charles A. Merritt" Co K. 3rd U.S.C.T. now undergoing sentence of Genl Court Martial at "Fort Marion" Fla, has been good while under my charge. viz - since Oct 28th 1864.

Henry McGonnigle
1st Lieut 17th Conn Vols
& Asst Provost Marshal

Approved as the within [illegible]
application [illegible]

By Order [illegible]
[illegible]

EB
139

Adjt Dept of Fla Judge Advocates Office Tallahassee Fla Aug 31 1865.

Respectfully returned. I have the honor to report that under the circumstances & from what I have learned from the man's former Company Commander, it seems to be a proper case for favorable action on the man's request, & I would respectfully recommend that the unexecuted portion of the Sentence be remitted.

[illegible] Lt Col 2nd U.S.C.I.
Judge Advocate

St. Augustine Fla
June 1st 1865

C.R. Dep M. L. 1865

Merritt Chas A
Private H. Co 3 U.S.C.T.

"Prisoner undergoing sentence,"

(two Enclosures)

Petitions for a reversal of his sentence - gives reasons, with recommendation from Officer in Charge Fort Marion,

L. R. B. M. 139 D.S. Vol 2

HEADQUARTERS, Dept of the South
Hilton Head, S.C. June 24 1865

Respectfully referred to Brig Genl. Vogdes Comdg Dist of Fla for recommendation,

By Command of
Maj. Genl Q A Gillmore
W L M Burger
Asst Adjt Genl

RECEIVED HD. QRS. JUL 3 1865 DIST OF FLA.

RECEIVED HD. QRS. JUL 15 1865 DEPT. SOUTH

July 18

Rec'd Hd Qrs Dept of Fla, July 18 65

HEAD QUARTERS, DIST. OF E. F.
... Brigade, D.
JACKSONVILLE, Fla. July 3 1865

Respy forwarded
Approved

Vogdes
Brig Gen Vols

Hd. Qrs. Dept of Fla,
Tallahassee July 27/65

C.R. 85

Respectfully referred (thro' Brig Genl. Vogdes, Comdg U.S. Forces in E. Fla.) to Comdg Officer Fort Marion who will furnish copy of the proceedings of the Court Martial in the Case of Charles A. Merritt Co. H, 3 Regt. Colored Infantry.
These papers to be returned.

By Command of Brig Gen. Newton:
A C Pretz,
Lt and A.A.A.G.

RECEIVED HD. QRS. JUL 9 1865 DEPT. SOUTH

Head Qrs, U S Forces E Fla
Jacksonville Fla
L.R. V2 July 29 1865

Respy referred to Comdg Officer Fort Marion who will comply with the instructions contained in the foregoing Endorsement

By order of
Brig Genl Vogdes
S L McHenry
A A Genl

C. R. 276

Head Qrs U.S. Troops
St Augustine Fla
Aug 8. 1865

Respectfully returned.
The charges against Pvt Merritt are. 1st Absent without leave. 2nd Disobedience of orders - 3rd Mutiny - Sentenced - "Loss of all pay. hard labor bal term of enlistment with 24 lb ball and chain 8 ft long. on left leg.

R. D. Mallery,
Bvt Col U.S.A.
Comdg

Head Quarters Dist East Florida Jacksonville
Aug 10 1865

Respy forwarded

Vogdes
Brig Genl

Hd Qrs Dept of Fla
Tallahassee Aug 14th

Respectfully referred to Judge Advocate General, Dept. of Fla who will after investigation, make his report in

recamondation Sir, I have been under arrest since the 3d of June 1864

And I have forteen months yet to serve.

I have the honor of being your very humble servant

Charles A. Merritt

Co. H. 3d N.S.C.T.

The New York Branch of
THE U. S. CHRISTIAN COMMISSION,
30 Bible House, New York.
Send this as the Soldier's Messenger to his home,
Let it haste to those who wait for tidings.

........Co.......Regt......Div...... Army Corps.

June 7th 1865.

Fort Marion.

St. Augustine

Florida

General Gilmore.

Sir. I hope to be excused for takeing the liberty of writing too you, but I by a misstep involved my self in to difficulty out of which I can not get with out "your" consent. My crime consisted in violating the 9th article of war. My sentence is very severe for a person in my situation, for I have a mother that is pretty well advanced in years. and quite a family which are dependant, but I can not assist them, and Sir, they with there letters of Intreaty, have been more punishment to me then my sentence, which is to forfit all pay, and were a ball and chain. But by my conduct being good since here. The officers in command gives this my

Co. H. 2. Dept of Fla, July 18/65.

Head Qrs Dist East Fla
Jacksonville Fla
Sept 23 1865

Respy transmitted
By order of
Col Marple
S L McHenry
A A Genl

RECEIVED H.Q. ... OFF.
E.U. 13: 5 - 947

Hd Qrs Department of Fla
Tallahassee Sept 1st 1865

Respectfully returned through intermediate Commanders to Bvt Col H D Wallen Comdg Post St Augustine, who will state what knowledge he has of the character and conduct of the within named man since he has been in confinement, and any other information he may possess relating to the case of the applicant

By order of
Maj Gen Foster
[illegible]
Capt & A.A.G.

EB
257

Recd Hd Qrs U S Troops Sept 6th 1865

Head Qrs Dist East Fla
Jacksonville Fla
Sept 5 1865

Respy transmitted with reference to foregoing Endorsement

By order of
Col W. [illegible]
[illegible]
A A Genl

E.B. # 947
[illegible]

Hd. Qrs. U. S. Troops.
St Augustine. Fla.
Sept 13th 1865.

The Conduct of Prisoner, Private Merritt 3d U.S.C.T. has not been such, during his present Confinement, as to warrant a recommendation for his release.

H. D. Wallen,
Bt. Col. U.S.A.
Comdg.

E.M.B. (C.S.F.) No. 648. Pg 29a

Head Qrs Dist East Fla
Jacksonville Fla
Sept 15 1865

Respy forwarded with reference to Endorsement of Col Wallen Comdg St Augustine

[illegible] Marple
Col 34 USCT
Comdg Dist

E.B. #947

Report 164,
Vol 2

Hd Qrs Dept of Fla
Septbr 20. 1865

Respectfully returned. Not favoribly Considered.

By Command of
Maj Genl Foster
Chas Mundee
A. A. Genl

[illegible]

Recd [illegible] Sept 2[illegible] [illegible]

Charles A. Merritt
Pvt Co H. 3c USCV

Div of V Command
answers inquiry

1 Enclosure

Awaiting return of a prior letter of
inquiry -
N J G

Mr Ellerbrook

Adjutant General's Office,

COLORED TROOPS BRANCH,

Feby 8", 1876

Vol. C. T., 187

Wanted in the case of Charles A Merritt, Private, Co. "K", Third Reg't U. S. C. Troops – Copy of S.O releasing him from confinement – "Sentenced by G C M – G O No 48. Hd Qrs Dist Fla Jacksonville Aug 12. 1864 – Released from Ft Marion & returned to Regt per S.O 51 Dept Fla Sept 29. 1865" M.O. Roll of Co. dated Jacksonville Fla Oct 31. 1865.

A. J. G.

Respectfully,

E. A. Woodward
Chief Clerk.

S. F. Slaton

Adjutant General's Office,

Div. of Discontinued Comds

Febr 12, 1876

Vol. 1 C. T., 187

Reply in case of Chas. A. Merritt, Co. H,

3 Reg't U. S. C. T.

S. O. No. 57. Hd Qrs. Dept. Florida. Sept 29. 1865.

2 All prisoners in Fort Pulaski, Fort Marion, Fort Pickens, and Fort Jefferson, Tortugas, (who are members of the 3 U. S. C. T. and who were sentenced to be confined during the remainder of their term of service) will on receipt of this order, be released from confinement and returned to their resp. Regiments.

Cap.

"Approved" Fort Clinch is designated as the place of confinement subject to the approval of the General Commanding Department.

By order Brig. Genl. Wm. Birney.
(signed) M. Bailey
Asst. Adjt. Genl.

His name is not borne on "Reports of Prisoners confined in Fort Clinch" for 1864, the only records of that Prison on file.)

General Order No. 146 - Dept. of the South, Oct. 12/64, orders that all prisoners then in confinement or ordered to be confined at Fort Clinch, be transferred to Fort Marion. St. Augustine Fla. for the execution of their sentences.

A Roll of Prisoners at Fort Marion from August 31/65 to October 31/65, reports - Charles A. Merritt Co. "H." 3d U.S.C.T. Released S.O. No. 51, Dept. Head quarters."

Date of confinement and release not reported. Other Rolls, (the only records of this Prison on file) furnish no additional information in this case.

Hd.qrs. Dept of Fla., Tallahassee Fla, Sept. 2/65 - S.O. No. 51 Par. 2 - "All prisoners in Fort Pulaski, Fort Marion, Fort Pickens, and Fort Jefferson, Tortugas, (who were sentenced to confinement during the remainder of their term of service,) who are members of the 2d Maine Cavalry, and of the 3d and 25th U.S.C.T., will on the receipt of this order be released from confinement and returned to their respective regiments."

By order of Maj. Genl Foster
(Sgd.) Chas. Mundee, A.A.Genl.

Company Morning Rept., October 13/65, reports:—"2 enlisted men from absent in confinement to present for duty."— Names not given.

C.A.G.

NARA1465

Adjutant General's Office,

COLORED TROOPS BRANCH,

Mr Ellerbrook

Feby 12th, 1876

Vol. C. T., 187

Wanted in the case of Charles A Merritt Private, Co. "A", Third Reg't U.S.C.T. Record of trial "Arrested & tried & Sentenced by G.O. 48. (Extract) Hd Qrs 2nd Dist Fla Jacksonville August 12, 1864" M.O. Roll of Co dated Jacksonville Fla Oct 31-1865

H. J. G.

Respectfully,

C. A. Woodward

Chief Clerk.

Pr. J. Halton

Adjutant General's Office,

Div. of Disctd. Commands

Feby 18, 1876.

Vol. C. T., 187

Reply in case of Charles A. Merritt Pvt, Co. "A", 3d Reg't U S C T

Hdqrs. Dist. of Florida, Jacksonville, Fla., Aug. 12/64, General Orders No. 48 Par. 3 Charge 1 "Absence without leave." Specn: "In this that he did absent himself from camp without authority for two days. This at Hilton Head, Island, S.C., on or about the 7th and 8th days of Feby, 1864" Charge 2 :- "Disobedience of orders" — Charge 3d "Mutiny" — Finding of the 3 Charges :- "Guilty" Sentence :- "To forfeit all pay now due, or that may become due and to be confined at hard labor on some Government fortifications, with a chain eight feet long and a twenty four pound ball, attached to his left leg, for the balance of his term of enlistment."

(over)

Meyers, Alfred

Co. G, 3 U.S. Col'd Inf.

Private Private

CARD NUMBERS.

1	625-405-0	26	
2	625-142	27	
3	625-235	28	
4	625-322	29	
5	625-104	30	
6	9061051	31	
7		32	
8		33	
9		34	
10		35	
11		36	
12		37	
13		38	
14		39	
15		40	
16		41	
17		42	
18		43	
19		44	
20		45	
21		46	
22		47	
23		48	
24		49	
25		50	

Book Mark:

See also

Sn 2396925 (PD) [illegible]

NARA1468

M | 3 | U.S.C.T.

Afford Myers

________, Co. E, 3 Reg't U. S. Col'd Inf.

Appears on

Company Descriptive Book

of the organization named above.

DESCRIPTION.

Age 21 years; height 5 feet 9 inches.

Complexion Molatto

Eyes Dark; hair Dark

Where born Virginia

Occupation ——

ENLISTMENT.

When Decemb. 16th, 1864.

Where Reding

By whom 8 Distr.; term 3 y'rs.

Remarks:

(383g)

B. Springsmith

Copyist.

NARA 1469

M | 3 | U.S.C.T.

Alfred Meyers

Appears with rank of Pvt on

Muster and Descriptive Roll of a Detachment of Substitutes forwarded

for the 3 Reg't U. S. Col'd Inf. Roll dated Chelten Hills Pa Camp Wm Penn, Feb 10, 1865.

Where born Va

Age 21 y'rs; occupation Laborer

When enlisted , 186 .

Where enlisted

For what period enlisted 3 years.

Eyes Hazel; hair Blk

Complexion Mull; height 5 ft. 9 in.

When mustered in Dec 16, 1864.

Where mustered in Reading Pa

Bounty paid $ 100; due $ 100

Where credited

Company to which assigned

Remarks: Sub. for Henry W. Snyder. Maxatawny Tp 28 Sub Dist 8 Cal Dist - 21 years of age -

Book mark:

Sains
Copyist

(339)

M | 3 | U.S.C.T.

Alfred Myers

Pvt, Co. E, 3 Reg't U.S. Col'd Infantry.

Appears on

Company Muster Roll

for March & April, 1865.

Present or absent Present

Stoppage, $ 100 for

Due Gov't, $ 100 for

Remarks: Recruit - Pay due from muster Enrollment & Mustered in Dec 16/64 at Rendezvous Per for 3 yrs.

1st. roll on which name is borne.

Book mark:

Joseph Stewart

(858) Copyist

NARA1471

M | 3 | U.S.C.T.

Alfred Meyers

Pri., Co. E, 3 Reg't U. S. Col'd Infantry.

Appears on

Company Muster Roll

for May & June, 1865.

Present or absent Present

Stoppage, $ .... 100 for ....

Due Gov't, $ .... 100 for ....

Remarks: Recruit - Due from enlistment.

Book mark: ....

W L Harrison
Copyist

(858)

NARA1472

M | 3 | U.S.C.T.

Alfred Meyers

Priv, Co. E, 3 Reg't U.S. Col'd Infantry.

Appears on

Company Muster Roll

for July & Aug, 1865.

Present or absent Present

Stoppage, $ 100 for

Due Gov't, $ 100 for

Remarks:

Book mark:

(858) Joseph Stewart
Copyist

M | 3 | U.S.C.T.

Alfred Myers

Pvt., Co. E, 3 Reg't U. S. Col'd Infantry.

Appears on **Co. Muster-out Roll,** dated Jacksonville Fla, Oct 31, 1865.

Muster-out to date Oct 31, 1865.

Last paid to June 30, 1865.

Clothing account:

Last settled....., 186 ; drawn since $.....100

Due soldier $ 17 93/100; due U. S. $.....100

Am't for cloth'g in kind or money adv'd $.....100

Due U. S. for arms, equipments, &c., $ 43/100

Bounty paid $.....100; due $.....100

Remarks: Private from enlistment

Book mark:

Joseph Stewart
Copyist.

(361)

NARA1474

Myers Alfred

........, Co. ...., ... Reg't. U.S.C.T.

1 **Enclosures.**

Bed Cards	Final Statements
Burial Records	Furloughs or L. of A.
Certs. of Dis. for Discharge	Med. Certificates
C. M. Charges	Med. Des. Lists
Descriptive Lists	Orders
Discharge Certificates	Pris. of War Record
Enlistment Papers 1	Resignations

Other papers relating to—

Admission to Hosp'l	Furlough or L. of A.
Casualty Sheet	Med. Examination
Confinement	Misc. Information
Contracts	Pay or Clothing
Death or Effects	Personal Reports
Desertion	Rank
Discharge from Hosp'l	Transfer to Hosp'l
Discharge from Service	Transfer to V. R. C.
Duty	Transportation

NARA1475

DECLARATION OF SUBSTITUTE.

I, Alfred Myers Col'd, desiring to ENLIST in the **Army of the United States**, for THREE YEARS, ***Do declare***, That I am Twenty One years and 0 months of age; that I have never been discharged from the United States service on account of disability or by sentence of a court martial; and I know of no impediment to my serving honestly and faithfully as a soldier for three years.

GIVEN at Reading Pa
the 16 day of December 1864

WITNESS:
E. H. Rauch

Alfred his x mark Myers

C. C. No.

No. 194
Alfred Myers Col'd
Enlisted at Reading Pa
As Substitute for
Henry W. Snyder
On the 16 day of December, 1864,
By
[illegible]
[illegible]
Martin [illegible]
Board of Enrollment,
8th Dist. of Penn'a

(No. 39.)

SUBSTITUTE

VOLUNTEER ENLISTMENT.

STATE OF Pennsylvania ~~TOWN~~ City OF Reading

I, Alfred Myers Colored, born in the State of Virginia, aged Twenty one years, and by occupation a Laborer, DO HEREBY ACKNOWLEDGE to have agreed with Henry W Snyder, Esq., of Manatawny Twp 28th Dist Dist 8th Dist Pa

to become his **SUBSTITUTE** in the Military Service, for a sufficient consideration paid and delivered to me, on the Twelfth day of December, 1864; and having thus agreed with said Henry W Snyder, I DO HEREBY ACKNOWLEDGE to have enlisted this Twelfth day of December, 1864, to serve as a ***Soldier*** in the **Army of the United States of America,** for the period of *THREE YEARS*, unless sooner discharged by proper authority. I do also agree to accept such bounty, pay, rations, and clothing as are, or may be, established by law for soldiers. And I do solemnly swear that I will bear true and faithful allegiance to the ***United States of America;*** that I will serve them honestly and faithfully against all their enemies or opposers whomsoever; and that I will observe and obey the orders of the President of the United States and the orders of the officers appointed over me, according to the Rules and Articles of War.

SWORN and subscribed to, at Reading Pa
this 16th of December, 1864,
BEFORE Geo W Durell
Capt & Pro Mar 8th Dist Pa

his
Alfred x Myers
mark

A Substitute Not Entitled to Bounty

Witness E H Rauch

We certify, on honor, That we have carefully examined the above-named Volunteer Substitute agreeably to the Regulations, and that, in our opinion, he is free from all bodily defects and mental infirmity which would in any way disqualify him from performing the duties of a soldier; that he was entirely sober when enlisted; that he is of lawful age, (not under 18 years;) and that, in accepting him as duly qualified to perform the duties of an able-bodied soldier, and as a Substitute in lieu of Henry W Snyder Enrolled, drafted in Manatawny twp 28th Dist Dist 8th Dist Pa, 186 , we have strictly observed the Regulations which govern in such cases. This soldier has Hazel eyes, Black hair, Mulatto complexion; is five feet Nine inches high.

Geo W Durell
Provost Marshal.

George W McCracken
Commissioner of Board.

Martin Luther
Surgeon of Board.

Board of Enrollment of 8th *Dist. of* Pennsylvania

191

Michael James

Co —, 3 U.S. Col'd Inf.

Private | Private

CARD NUMBERS.

1 6 2 5 7 4 4 0	26
2	27
3	28
4	29
5	30
6	31
7	32
8	33
9	34
10	35
11	36
12	37
13	38
14	39
15	40
16	41
17	42
18	43
19	44
20	45
21	46
22	47
23	48
24	49
25	50

Book Mark:

See also

M. | 3 | U.S.C.T.

James Michael

Appears with rank of Prvt. on

Muster and Descriptive Roll of a Detachment of U. S. Vols. forwarded

for the 3 Reg't U. S. Col'd Infantry. Roll dated Lancaster Penna. Sept. 2d, 1864.

Where born Lancaster Co. Pennsylvania

Age 30 y'rs; occupation Laborer

When enlisted Aug. 26, 1864.

Where enlisted Lancaster Pa.

For what period enlisted 1 years.

Eyes Black; hair Black

Complexion Black; height 5 ft. 8 3/4 in.

When mustered in Aug. 26, 1864.

Where mustered in Lancaster

Bounty paid $ 100; due $ 100 100

Where credited Paradise Twp. 43d Sub. Dist. Lancaster Co. 9th Cong. Dist. Penna.

Company to which assigned B

Remarks: Small scar at the base of thumb right hand. Not taken up on Muster rolls of Regt.

Book mark:

Gagnett

(339) Copyist.

Middleton Franklin

Co. C, 3 U.S. Col'd Inf.

Private Private

CARD NUMBERS.

1	625-3604	26	
2	625-3647	27	
3	625-3768	28	
4	625-3851	29	
5	625-3932	30	
6	625-4011	31	
7	625-4047	32	
8	625-4165	33	
9	625-4243	34	
10	625-4322	35	
11	625-4401	36	
12	625-4447	37	
13	625-4562	38	
14	625-4664	39	
15	9060688	40	
16		41	
17		42	
18		43	
19		44	
20		45	
21		46	
22		47	
23		48	
24		49	
25		50	

Book Mark:

See also

M | 3 | U.S.C.T.

Franklin Midleton

....., Co. B, 3 Reg't U. S. Col'd Inf.

Appears on

Company Descriptive Book

of the organization named above.

DESCRIPTION.

Age 25 years; height 5 feet 9 inches.

Complexion brown

Eyes black; hair black

Where born Lancaster Co Penn

Occupation Laborer

ENLISTMENT.

When June 30, 1863

Where Philadelphia

By whom Lt Col Wagner; term 3 y'rs.

Remarks:

Flemming

(383y) Copyist.

M. | 3 | U.S.C.T.

Franklin Middleton

Priv., Co. B, 3 Reg't U. S. Col'd Infantry.

Age 25 years.

Appears on

Company Muster-in Roll

of the organization named above. Roll dated Phil., Pa., Aug 7, 1863.

Muster-in to date June 30, 1863.

Joined for duty and enrolled:

When June 30, 1863.*

Where Phil., Pa.,*

Period 3 years.*

Remarks:

*☞ Muster-in roll shows enrollment of all men of this company as of same date and place. See enrollment on subsequent card or cards.

Book mark:

Martin

(356c) Copyist.

M. | 3 | U.S.C.T.

Franklin Midleton

Pvt., Co. B, 3 Reg't U. S. Col'd Infantry.

Appears on

Company Muster Roll

for July & Aug, 1863.

Joined for duty and enrolled:

When June 20, 1863.*

Where Phil. Pa *

Period 3 years.*

Present or absent Present

Stoppage, $ 100 for

Due Gov't $ 100 for

Remarks:

* ☞ See enrollment on card from muster-in roll.

Book mark:

Martin

(858c) Copyist.

NARA 1483

M. | 3 | U.S.C.T.

Franklin Middleton

Priv., Co. B, 3 Reg't U. S. Col'd Infantry.

Appears on

Company Muster Roll

for Sept & Oct, 1863.

Joined for duty and enrolled:

When June 30, 1863.*

Where Phil. Pa, *

Period 3 years.*

Present or absent Present

Stoppage, $ 100 for

Due Gov't $ 100 for

Remarks: Pay due from date of original muster

* ☞ See enrollment on card from muster-in roll.

Book mark:

Martin

(358c) Copyist.

M. | 3 | U.S.C.T.

Franklin Middleton

Priv., Co. B, 3 Reg't U. S. Col'd Infantry.

Appears on

Company Muster Roll

for Nov. & Dec, 1863.

Joined for duty and enrolled:

When June 30, 1863.*

Where Phil. Pa.*

Period 3 years.*

Present or absent Present

Stoppage, $ 100 for

Due Gov't $ 100 for

Remarks: Pay due from date of original muster.

* See enrollment on card from muster-in roll.

Book mark:

Martin

(358c) Copyist.

W. | 3 | U.S.C.T.

Franklin Middleton

Priv., Co. B, 3 Reg't U. S. Col'd Infantry.

Appears on

Company Muster Roll

for Jan & Feb, 1864.

Joined for duty and enrolled:

When June 30, 1863.*

Where Phil. Pa. *

Period 3 years.*

Present or absent Present.

Stoppage, $ 100 for

Due Gov't $ 100 for

Remarks:

* ☞ See enrollment on card from muster-in roll.

Book mark:

Martin

(358c) Copyist.

M | 3 | U.S.C.T.

Franklin Middleton

Priv., Co. B, 3 Reg't U. S. Col'd Infantry.

Appears on

Company Muster Roll

for Mar & Apr, 1864.

Joined for duty and enrolled:

When June 30, 1863*

Where Philadelphia Pa*

Period 3 years.*

Present or absent Present

Stoppage, $ ..... 100 for .....

Due Gov't, $ ..... 100 for .....

Remarks: Stop for Canteen

* ☞ See enrollment on card from muster-in roll.

Book mark:

J. M. Taily

(358c) Copyist.

M | 3 | U.S.C.T.

Franklin Middleton

Pvt., Co. B, 3 Reg't U. S. Col'd Infantry.

Appears on

Company Muster Roll

for May & June, 1864.

Joined for duty and enrolled:

When June 30, 1863.*

Where Philad. Pa *

Period 3 years.*

Present or absent Present

Stoppage, $ 100 for

Due Gov't, $ 100 for

Remarks:

* ☞ See enrollment on card from muster-in roll.

Book mark:

Washington

(358c)

Copyist.

M | 3 | U.S.C.T.

Franklin Middleton Pix, Co. B, 3 Reg't U. S. Col'd Infantry.

Appears on

Company Muster Roll

for May June July & Aug, 1864.

Joined for duty and enrolled:

When June 30, 1863.*

Where Philad. Pa. *

Period 3 years.*

Present or absent Present

Stoppage, $ 100 for

Due Gov't $ 100 for

Remarks: Free on or before April 19th 1861.

* See enrollment on card from muster-in roll.

Book mark:

Washington

(358c) Copyist.

M | 3 | U.S.C.T.

Franklin Middleton

Pvt, Co. B, 3 Reg't U. S. Col'd Infantry.

Appears on

Company Muster Roll

for Sept & Oct, 1864.

Joined for duty and enrolled:

When June 30, 1863.*

Where Phila. Pa *

Period 3 years.*

Present or absent Present

Stoppage, $ 100 for

Due Gov't $ 100 for

Remarks: Free on or before April 19th 1861 — Due soldier disc pay $16 per mo. from June 29th 1863 to Apr. 30th 1864

* See enrollment on card from muster-in roll.

Book mark:

Waddington

(358c) Copyist.

M | 3 | U.S.C.T.

Franklin Middleton

Priv, Co. B, 3 Reg't U. S. Col'd Infantry.

Appears on

Company Muster Roll

for Sept Oct Nov & Dec, 1864.

Joined for duty and enrolled:

When June 30, 1863.*

Where Phila Pa *

Period 3 years.*

Present or absent Present

Stoppage, $ 100 for

Due Gov't $ 100 for

Remarks: Free on or before April 19th 1861. Stop. for 1 Canteen. Due soldier diff pay $6 per mo from June 29th 1863 to Apr. 30th 1864

* See enrollment on card from muster-in roll.

Book mark:

Waddington

(358c) Copyist.

MARA1491

M | 3 | U.S.C.T.

Franklin Middleton

Pvt., Co. B, 3 Reg't U. S. Col'd Infantry.

Appears on

Company Muster Roll

for From Aug 31/64 to Feb 28, 1865.

Joined for duty and enrolled:

When June 30, 1863.*

Where Phila Pa *

Period 3 years.*

Present or absent Present

Stoppage, $ 100 for

Due Gov't $ 100 for

Remarks: Free on or before April 19th 1861. Stop for 1 month Due soldier dif pay $6 per mo from Enrollment to Apr. 30th 1864

* See enrollment on card from muster-in roll.

Book mark:

Washington

(358c) Copyist.

NARA1492

M | 3 | U.S.C.T.

Franklin Middleton

Pri, Co. B, 3 Reg't U. S. Col'd Inf

Appears on

Company Muster Roll

for Mch & Apl 1865

Joined for duty and enrolled:

When June 30, 1863*

Where Phila, Pa. *

Period 3 years.*

Present or absent Present

Stoppage, $ 100 for 1 canteen

Due Gov't, $ 100 for

Valuation of horse, $ 100

Valuation of horse equipments, $ 100

Remarks: Free on or before Apl 19/61. Due Soldier dif pay $6 per mo from enrollment to Apl 30/64

* See enrollment on card from muster-in roll.

Book-mark:

W. M. Jackson

(358c) Copyist.

M | 3 | U.S.C.T.

Franklin Middleton,

Prvt, Co. B, 3 Reg't U. S. Col'd Infantry.

Appears on

Company Muster Roll

for May and June, 1865.

Joined for duty and enrolled:

When June 25, 1863*

Where Phila. Pa.*

Period 3 years.*

Present or absent Present.

Stoppage, $ 100 for 1 Contain.

Due Gov't $ 100 for

Remarks: Free on or before Apl 19, 61, due soldier dif. pay $6 per mo. from enrolment to Apl 30, 1864

NEXT ROLL ON FILE MUSTER OUT.

* See enrollment on card from muster-in roll.

Book mark:

Calloway,

(358c) Copyist.

M | 3 | U.S.C.T.

Franklin Middleton

Pvt., Co. B, 3 Reg't U. S. Col'd Infantry.

Appears on **Co. Muster-out Roll,** dated Jacksonville, Fla., Oct. 31, 1865.

Muster-out to date Oct. 31, 1865.

Last paid to June 30, 1865.

Clothing account:

Last settled....., 186 ; drawn since $.....100

Due soldier $.....100; due U. S. $....35 89/100

Am't for cloth'g in kind or money adv'd $.....100

Due U. S. for arms, equipments, &c., $.....6 00/100

Bounty paid $.....100; due $..100 100

Remarks: Private from enrollment.

Book mark:

J. M. Dickson

(361) Copyist.

HARRIS

793

Hilburn, Jeremiah

Co. I, 3 U.S. Col'd Inf.

Corporal | Corporal

CARD NUMBERS.

1	6261880	26	
2	6261962	27	
3	6262046	28	
4	6262126	29	
5	6262202	30	
6	6262278	31	
7	6262354	32	
8	6262428	33	
9	6262561	34	
10	6262639	35	
11	6263013	36	
12	9061440	37	
13		38	
14		39	
15		40	
16		41	
17		42	
18		43	
19		44	
20		45	
21		46	
22		47	
23		48	
24		49	
25		50	

Book Mark:

See also

M. | 3 | U.S.C.T.

Jeremiah Milburn

, Co. I, 3 Reg't U. S. Col'd Inf.

Appears on

Company Descriptive Book

of the organization named above.

DESCRIPTION.

Age 21 years; height 5 feet 7 inches.

Complexion Yellow

Eyes Black; hair Black

Where born Lancaster Co. Pa.

Occupation Laborer

ENLISTMENT.

When July 22, 1863.

Where Phila. Pa.

By whom Lt Col Wagner, term 3 y'rs.

Remarks: Died in Gen'l Hospital at St. Augustine Fla. August 18th 1864 of Remitt Fever (See Register of Deaths).

Dayatt

(383a) Copyist.

M | 3 | U.S.C.T.

Jeremiah Milburn

Corpl, Co. I, 3 Reg't U. S. Col'd Infantry.

Age 21 years.

Appears on

Company Muster-in Roll

of the organization named above. Roll dated Philada Pa. July 26, 1863.

Muster-in to date July 22, 1863

Joined for duty and enrolled:

When July 22, 1863.

Where Philadelphia, Pa.

Period 3 years.

Remarks: Mustered by Capt. Sergeant, U.S.A. July 22, 1863.

Book mark:

C. E. McLaughlin

(856) Copyist.

M | 3 | U.S.C.T.

Jeremiah Milburn

Corp'l, Co. I, 3 Reg't U. S. Col'd Infantry.

Appears on

Company Muster Roll

for July 26 to Aug. 31, 1863.

Present or absent Present

Stoppage, $ 100 for

Due Gov't, $ 100 for

Remarks:

Book mark:

L. E. McLaughlin

(858) Copyist

M | 3 | U.S.C.T.

Jeremiah Milburn

Corp., Co. I, 3 Reg't U. S. Col'd Infantry.

Appears on

Company Muster Roll

for Sept. & Oct., 1863.

Present or absent Present

Stoppage, $ 100 for

Due Gov't, $ 100 for

Remarks:

Book mark:

C. E. McLaughlin

(858) Copyist

M | 3 | U.S.C.T.

Jeremiah Milburn

Corp., Co. I, 3 Reg't U. S. Col'd Infantry.

Appears on

Company Muster Roll

for Nov. & Dec., 1863.

Present or absent Present

Stoppage, $ 100 for

Due Gov't, $ 100 for

Remarks:

Book mark:

C. E. McLaughlin

(353) Copyist

M | 3 | U.S.C.T.

Jeremiah Milburn

Corp., Co. I, 3 Reg't U. S. Col'd Infantry.

Appears on

Company Muster Roll

for Jan. & Feb., 1864.

Present or absent Present

Stoppage, $ 100 for

Due Gov't, $ 100 for

Remarks:

Book mark:

C. E. McLaughlin

(358) Copyist

M 3 U.S.C.T.

Jeremiah M Brown

Corpl, Co. I, 3 Reg't U. S. Col'd Infantry.

Appears on

Company Muster Roll

for Mar & Apl, 1864.

Present or absent Present

Stoppage, $ 100 for

Due Gov't, $ 100 for

Remarks:

Book mark:

J M Brown

(353) Copyist

No. 3 U.S.C.T.

Jeremiah McBurn

Cpl., Co. I, 3 Reg't U. S. Col'd Infantry.

Appears on

Company Muster Roll

for May June, 1864.

Present or absent Present

Stoppage, $ 100 for

Due Gov't, $ 100 for

Remarks:

Book mark:

D. J. Moore

Copyist

(858)

M 3 U.S.C.T.

Jeremiah Milburn

Corpl, Co. I, 3 Reg't U. S. Col'd Infantry.

Appears on

Company Muster Roll

for July & Aug, 1864.

Present or absent Absent

Stoppage, $ 100 for

Due Gov't, $ 100 for

Remarks: Absent sick in Gen Hosp. at St. Augustine Fla.

Book mark:

(858) Copyist

NARA1505

M | 3 | U.S.C.T.

Jeremiah Milburn

Corpl, Co. I, 3 Reg't U. S. Col'd Infantry.

Appears on

Company Muster Roll

for Sept & Oct, 1864.

Present or absent

Stoppage, $ 100 for

Due Gov't, $ 100 for

Remarks: Paid $7.00 per month from enlistment to the 30. April 1864 Back pay due Corpl from July 24 1863 Died Aug 18. 1864 St Augustine Fla.

Book mark: 159028 June 19, '68.

C J Moore

(358) Copyist

M | 3 | U.S.C.T.

Jeremiah Milburn

Cpl, Co. I, 3 Reg't U. S. Col'd Infantry.

Appears on

Company Muster Roll

for Nov. & Dec, 1864.

Present or absent

Stoppage, $ 100 for

Due Gov't, $ 100 for

Remarks: Corporal from July 24, '63. Died Aug. 18, 1864 at St Augustine, Fla.

Book mark:

D J Moore
Copyist

(858)

NARA1507

M.	3	U.S.C.T.

Jeremiah Milburn

Corp., Co. I, 3 Reg't U. S. Col'd Infantry.

Appears on **Co. Muster-out Roll,** dated

Jacksonville, Fla Oct. 31, 1865.

Muster-out to date ...., 186 .

Last paid to Apr. 30, 1864.

Clothing account:

Last settled ...., 186 ; drawn since $......100

Due soldier $..........100; due U. S. $..........100

Am't for cloth'g in kind or money adv'd $......100

Due U. S. for arms, equipments, &c., $..........100

Bounty paid $..........100; due $..........100

Remarks: Joined as Corp. Died Aug. 18. 1864. at St. Augustine Fla. of Fever
Final Statements forwarded.

Book mark: C. 140 S. 128.72. _1057. 1879.
159.028 - June 19 - 68

N. J. White.
Copyist.

(361)

Milburn, Jeremiah.

Corp., Co. S, 3 Reg't U.S.C. Inf.

1 Enclosures.

Bed Cards	Descriptive Lists
Burial Records	Final Statements 1
Certs. of Dis. for Discharge	Furloughs
C. M. Charges	Med. Des. Lists
Med. Certificates	Orders

Other papers relating to—

Admission to Hosp'l	Furlough
Casualty Sheet (Officer's)	Med. Examination
Confinement	Misc. Information
Contracts	Pay or Clothing
Death or Effects	Personal Reports
Desertions	Rank
Discharge from Hosp'l	Transfer to Hosp'l
Discharge from Service	Transfer to V. R. C.
Duty	Transportation

NARA1509

FINAL STATEMENT

29. Co. D.

OF

Corp Jeremiah Milburn

3d Reg't of U S Col'd Troops

Co. D

VOLUNTEERS.

Died August 18th 1864

NOTE 1.—*Two* of these certificates (or duplicates) are to be given to each Volunteer Soldier or drafted man who may be discharged previously to the discharge of his company, that he may at once receive from the Paymaster the pay, &c., due him, and the captain or other COMMISSIONED officer commanding the company will certify to the act of the delivery of the duplicate certificates; on these certificates the Soldier is "entitled to" his *discharge*, and should also present his discharge to the Paymaster to have the payment endorsed on it. The discharge is to be given back to the Soldier by the Paymaster; the latter only retaining as his voucher the duplicate certificates.

NOTE 2.—If the Soldier is entitled to pay for the use of his horse, the Company Commander will certify to that fact on the back of both these final statements, and also to the time he has pay due for having been so mounted on his own horse.

NOTE 3.—When a Soldier is furnished with final statements, his descriptive list, if he has one, should be taken up by the officer who gives the Soldier these statements, and endorsed with a statement to this effect by the officer. This endorsement should exhibit a full statement of the time for which the Soldier was allowed pay on his final statements, the clothing account, and all other charges against him or in his favor, so as to comprise a complete exhibit of his account. It will then be transmitted to the company commander of the Soldier, who will enter all the data necessary to a full understanding of the Soldier's account on the muster roll upon which the Soldier's discharge is reported. The descriptive list will then be destroyed. The object of this is, that the remaining portion of the Soldier's account may be settled upon the receipt of these muster rolls, and the Soldier receive any pay or allowances that may be due him at the time of his discharge, and which may not appear on his final statements from the fact that his descriptive list is incomplete. These accounts for back pay, &c., are settled by the 2d Auditor of the Treasury Department.

NOTE 4.—Charges for loss or injury to ordnance, horse equipments, and other miscellaneous charges, should appear under the heading of "Other Stoppages."

NOTE 5.—Bounty paid by State authorities, and not by the United States, will not be entered on this statement.

NOTE 6.—Amounts due the Sutler and Laundress must be entered on the muster roll on which the discharge, death, desertion, &c., is reported, as well as on the final statement, otherwise the amount cannot be collected from the United States.

NOTE 7.—This blank will be used for deceased volunteers and drafted men, as well as for others.

NOTE 8.—Where a Soldier dies in Hospital or on detached service, his descriptive list, if he has one, should be sent with his final statements, in duplicate, to the Adjutant General, Washington, D. C.

Ent'd on C.R. of C.

ADJUTANT GENERAL'S OFFICE.
June 29. 1865.
Duplicate with Inventory sent 2d Auditor.

I certify, on honor, that Jeremiah Milburn a Corporal of Captain Chas F. Smith's Company (I) of the Third Regiment of U S Cold Troops **VOLUNTEERS,** of the State of ....., born in Lancaster Co, State of Pennsylvania, aged 21 years; 5 feet 7 inches high; Sallow complexion, Black eyes, Black hair, and by occupation a Laborer, having joined the company on its original organization at Philadelphia Penn, and enrolled in it at the muster into the service of the United States at Philadelphia Penn, on the Twenty Second day of July, 1863, (or was mustered in service as a recruit, by ....., at ....., on the ..... day of ....., 186 , or was drafted and mustered into the service of the United States from the ..... Enrollment District of the State of ....., at ....., on the ..... day of ....., 186 ,) to serve in the Regiment, for the term of Three years: and having served **HONESTLY** and **FAITHFULLY** with his Company in Camp & Field to the present date, is now entitled to a **DISCHARGE** by reason of Death in Hospital at St Augustine Fla from Remittent Fever August 18th 1864

The said Corporal Jeremiah Milburn was last paid by Paymaster Major McConnell to include the Thirteenth day of April, 1864, and has pay due him from that time to the present date; he is entitled to pay and subsistence for **TRAVELING** to place of enrollment, and whatever other allowances are authorized to volunteer soldiers, drafted men, or militia, so discharged. He has received from the United States **CLOTHING** amounting to Sixty two $\frac{82}{100}$ dollars, since the ..... day of Enrollment, 1863, when his clothing account was last settled. He has received from the United States ——— $\frac{}{100}$ dollars advanced **BOUNTY.**

There is to be stopped from him, on account of the State of ....., or other authorities, for **CLOTHING,** &c., received on entering service, ——— $\frac{}{100}$ dollars; and for other stoppages, viz: .....

..... $\frac{}{100}$ dollars.

He has been furnished with TRANSPORTATION in kind from the place of his discharge to .....; and he has been SUBSISTED for TRAVELING to his place of enrollment, up to the ....., 186 .

He is indebted to ....., **SUTLER,** ——— $\frac{}{100}$ dollars.

He is indebted to ....., **LAUNDRESS,** ——— $\frac{}{100}$ dollars.

Given in Duplicate, at Jacksonville Fla, this 27th day of February, 1865.

Chas F. Smith
Capt 3d U.S.C.T.
Commanding Company.

[A. G. O. No. 95—First.]

Milford Charles

Co —, 3 U.S. Col'd Inf.

Private | Private

CARD NUMBERS.

1 625-1441	26
2	27
3	28
4	29
5	30
6	31
7	32
8	33
9	34
10	35
11	36
12	37
13	38
14	39
15	40
16	41
17	42
18	43
19	44
20	45
21	46
22	47
23	48
24	49
25	50

Book Mark:

See also

M. | 3 | U.S.C.T.

Charles Milford

Appears with rank of Priv. on

Muster and Descriptive Roll of a Detachment of U. S. Vols. forwarded

for the 3 Reg't U. S. Col'd Infantry. Roll dated Lancaster Penna., Sept. 2, 1864.

Where born Lancaster Co. Pennsylvania

Age 23 y'rs; occupation Laborer

When enlisted Aug. 26, 1864.

Where enlisted Lancaster Pa.

For what period enlisted 1 years.

Eyes Black; hair Black

Complexion Black; height 5 ft. 10¼ in.

When mustered in Aug. 26, 1864.

Where mustered in Lancaster

Bounty paid $ 100; due $ 100 100

Where credited To Paradise Twp. 43d Sub. Dist. Lancaster Co. 9th Cong. Dist Penna.

Company to which assigned B

Remarks: No marks.

Not taken up on muster rolls of Regt.

Book mark:

Daggett

(339) Copyist.

Milford, Charles

, Co. B, 3 Reg't U. S. C. T.

7 Enclosures.

Bed Cards	Final Statements
Burial Records	Furloughs or L. of A
Certs. of Dis. for Discharge	Med. Certificates
C. M. Charges	Med. Des. Lists
Descriptive Lists	Orders
Discharge Certificates	Pris. of War Record
Enlistment Papers 2	Resignations

Other papers relating to—

Admission to Hosp'l	Furlough or L. of A
Casualty Sheet	Med. Examination
Confinement	Misc. Information
Contracts	Pay or Clothing
Death or Effects	Personal Reports
Desertion	Rank
Discharge from Hosp'l	Transfer to Hosp'l
Discharge from Service	Transfer to V. R. C.
Duty	Transportation

DECLARATION OF RECRUIT.

I, *Charles Milford jr*, desiring to VOLUNTEER as a Soldier in the Army of the United States, for the term of ~~THREE~~ *One* YEAR~~S~~, **Do Declare**, That I am *Twenty three* years and *two* months of age; that I have never been discharged from the United States service on account of disability or by sentence of a court martial, or by order before the expiration of ~~a~~ *One* term of enlistment; and I know of no impediment to my serving honestly and faithfully as a soldier for ~~three~~ years.

GIVEN at *Lancaster Pennsylvania*

the *26th* day of *August 1864*

Witness:

John E Carpenter

Charles Milford jr

CONSENT IN CASE OF MINOR.

I, ____________, DO CERTIFY, That I am the ____________ of ____________; that the said ____________ is ____________ years of age; and I do hereby freely give my CONSENT to his volunteering as a SOLDIER in the ARMY OF THE UNITED STATES for the period of THREE YEARS.

GIVEN at ____________

the ________ day of ____________

Witness:

____

____

(A. G. O. No. 74 & 76.)

NOTE 1.—This blank will be used for both enlistments and re-enlistments—enlistment of veterans, &c., &c., in the volunteer service. They will be made out in duplicate in all cases—one to accompany the recruiting return of the superintendent (not the recruiting officer) to the Adjutant General, and one to accompany the accounts of the officer who pays bounty, &c. The Regiment and Company in which the soldier last served should be given on the back.

NOTE 2.—An enlistment holds to service. A muster-in must, in all cases, precede payment of pay, bounty, pension, &c. A muster-in roll must, in all cases, be filed in the Adjutant General's Office as evidence of muster-in. The mustering officer, commissary, or assistant commissary of musters, as the case may be, will countersign both enlistments as having mustered the soldier into the service of the United States before either of them is given to the disbursing officer.

1864 43 6.

No. *2346*

Charles Milford

Volunteered at *Lancaster Penna*

August Twenty Sixth, 1864,

By *Thaddeus Stevens Jr Capt & Pro Mar* Regiment of *9th Dist Penna*

____________ enlistment; last served in Company ( )

3d Reg't of *U.S.C. Infty*

Discharged ____________, 18 .

Credited to Paradise Twp 43d Sub district 9th Cong Dist Penna

Co "B" 3d U.S. Col Regt

NARA1515

VOLUNTEER ENLISTMENT.

STATE OF Pennsylvania | TOWN OF Lancaster

I, Charles Milford jr, born in Lancaster Co in the State of Pennsylvania, aged Twenty three years, and by occupation a Laborer, DO HEREBY ACKNOWLEDGE to have volunteered this Twenty Sixth day of August, 1864, to serve as a **Soldier** in the **Army of the United States of America,** for the period of ~~THREE~~ One YEAR~~S~~, unless sooner discharged by proper authority: Do also agree to accept such bounty, pay, rations, and clothing, as are, or may be, established by law for volunteers. And I, Charles Milford, do solemnly swear, that I will bear true faith and allegiance to the ***United States of America,*** and that I will serve them honestly and faithfully against all their enemies or opposers whomsoever; and that I will observe and obey the orders of the President of the United States, and the orders of the officers appointed over me, according to the Rules and Articles of War.

Sworn and subscribed to, at Lancaster Penna this ~~twenty~~ Sixth day of August, 1864. } Charles Milford Jr

BEFORE Thaddeus Stevens Jr
Capt & Pro Mar 9th dist Penna

I CERTIFY, ON HONOR, That I have carefully examined the above-named Volunteer, agreeably to the General Regulations of the Army, and that, in my opinion, he is free from all bodily defects and mental infirmity, which would in any way disqualify him from performing the duties of a soldier.

John L. Atlee Jr
9th Dist Penna
EXAMINING SURGEON.

I CERTIFY, ON HONOR, That I have minutely inspected the Volunteer Charles Milford previously to his enlistment, and that he was entirely sober when enlisted; that, to the best of my judgment and belief, he is of lawful age; and that, in accepting him as duly qualified to perform the duties of an able-bodied soldier, I have strictly observed the Regulations which govern the recruiting service. This soldier has Black *eyes,* Black *hair,* Black *complexion,* is Five *feet* Ten 1/4 *inches high.*

Thaddeus Stevens Jr
Capt & Pro ~~Regiment of~~ Mar 9th Dist ~~Volunteers,~~ Penna
RECRUITING OFFICER.

(A. G. O. No. 74 & 76.)

Mustered into the service of the United States, for ~~three~~ One year~~s or during the war~~, from date of enlistment, in Company "B" Third Regiment of U. S. Colored Volunteers, on the 26th day of August, 1864, at Lancaster Penna

Thaddeus Stevens Jr
Capt & Pro Mar
9th Dist Penna

DECLARATION OF RECRUIT.

I, Charles Milford Jr, desiring to VOLUNTEER as a Soldier in the Army of the United States, for the term of ~~THREE~~ One YEARS, Do Declare, That I am Twenty three years and two months of age; that I have never been discharged from the United States service on account of disability or by sentence of a court martial, or by order before the expiration of ~~a~~ term of enlistment; and I know of no impediment to my serving honestly and faithfully as a soldier for ~~three~~ One years.

GIVEN at Lancaster Pennsylvania
the 26th day of August 1864

Witness:
John E. Carpenter

Charles Milford Jr

NOTE 1.—This blank will be used for both enlistments and re-enlistments—enlistment of veterans, &c., &c., in the volunteer service. They will be made out in duplicate in all cases—one to accompany the recruiting return of the superintendent (not the recruiting officer) to the Adjutant General, and one to accompany the accounts of the officer who pays bounty, &c. The Regiment and Company in which the soldier last served should be given on the back.

NOTE 2.—An enlistment holds to service. A muster-in must, in all cases, precede payment of pay, bounty, pension, &c. A muster-in roll must, in all cases, be filed in the Adjutant General's Office as evidence of muster-in. The mustering officer, commissary, or assistant commissary of musters, as the case may be, will countersign both enlistments as having mustered the soldier into the service of the United States before either of them is given to the disbursing officer.

Chas Milford Jr.

No. 2346

Volunteered at Lancaster Penna
August Twenty Sixth, 1864
By Thaddeus Stevens Jr. Capt
Pro Mar Regiment of 9th Dist Penna

enlistment; last served in Company ( )

Reg't of

Discharged ____, 18 .

Credited to Paradise
Sub 43rd Subdistrict
9th Cong Dist Penna
Co "B" 3rd U.S. Col Vol

CONSENT IN CASE OF MINOR.

I, ____, Do certify, That I am the ____ of ____; that the said ____ is ____ years of age; and I do hereby freely give my CONSENT to his volunteering as a SOLDIER in the ARMY OF THE UNITED STATES for the period of THREE YEARS.

GIVEN at ____
the ____ day of ____

Witness:

(A. G. O. No. 74 & 76.)

VOLUNTEER ENLISTMENT.

STATE OF Pennsylvania

TOWN OF Lancaster

I, Charles Milford, born in Lancaster Co in the State of Pennsylvania, aged Twenty three years, and by occupation a Labour, Do HEREBY ACKNOWLEDGE to have volunteered this Twenty Sixth day of August, 1864, to serve as a **Soldier** in the **Army of the United States of America**, for the period of ~~THREE~~ One *YEAR~~S~~*, unless sooner discharged by proper authority: Do also agree to accept such bounty, pay, rations, and clothing, as are, or may be, established by law for volunteers. And I, Charles Milford, do solemnly swear, that I will bear true faith and allegiance to the ***United States of America***, and that I will serve them honestly and faithfully against all their enemies or opposers whomsoever; and that I will observe and obey the orders of the President of the United States, and the orders of the officers appointed over me, according to the Rules and Articles of War.

Sworn and subscribed to, at Lancaster Penna
this Twenty Sixth day of August, 1864,
BEFORE Thaddeus Stevens Jr.
Capt & Pro Mar 9th Dist Penna

Charles Milford, his X mark

I CERTIFY, ON HONOR, That I have carefully examined the above-named Volunteer, agreeably to the General Regulations of the Army, and that, in my opinion, he is free from all bodily defects and mental infirmity, which would in any way disqualify him from performing the duties of a soldier.

John L. Atlee Jr
9th Dist Penna
EXAMINING SURGEON.

I CERTIFY, ON HONOR, That I have minutely inspected the Volunteer Charles Milford previously to his enlistment, and that he was entirely sober when enlisted; that, to the best of my judgment and belief, he is of lawful age; and that, in accepting him as duly qualified to perform the duties of an able-bodied soldier, I have strictly observed the Regulations which govern the recruiting service. This soldier has Black *eyes,* Black *hair,* Black *complexion,* is Five *feet* Ten 1/4 *inches* high.

Thaddeus Stevens Jr.
Capt & Pro Mar *Regiment of* 9th Dist Penna ~~*Volunteers*~~,
RECRUITING OFFICER.

(A. G. O. No. 74 & 76.)

Mustered into the service of the United States, for ~~three~~ One year~~s~~ or ~~during the war~~, from date of enlistment, in Company "B" First Regiment of U. S. Colored Volunteers, on the 26th day of August, 1864, at Lancaster Penna

Thaddeus Stevens Jr.
Capt & Pro Marshal
9th Dist Penna

Mifford, Elias R.

Co. E, 3 U.S. Col'd Inf.

Sergeant Sergeant

CARD NUMBERS.

1	623-3550	26	
2	623-3633	27	
3	623-3717	28	
4	623-3794	29	
5	623-3877	30	
6	623-3957	31	
7	623-4035	32	
8	623-4113	33	
9	623-4191	34	
10	623-4264	35	
11	623-4347	36	
12	623-4425	37	
13	623-4519	38	
14	623-4616	39	
15	906063 4	40	
16		41	
17		42	
18		43	
19		44	
20		45	
21		46	
22		47	
23		48	
24		49	
25		50	

Book Mark:

See also

M | 3 | U.S.C.T.

Elias R Milford

, Co. B, 3 Reg't U. S. Col'd Inf.

Appears on

Company Descriptive Book

of the organization named above.

DESCRIPTION.

Age 28 years; height 5 feet 8 inches.

Complexion black

Eyes black; hair black

Where born Unknown Del

Occupation Laborer

ENLISTMENT.

When June 30, 1863

Where Philadelphia

By whom Lt Col Wagner; term 3 y'rs.

Remarks:

Henston

(383g) Copyist.

M | 3 | U.S.C.T.

Elias Milford

Sergt, Co. B, 3 Reg't U. S. Col'd Infantry.

Age 28 years.

Appears on

Company Muster-in Roll

of the organization named above. Roll dated Phil. Pa., Aug 7, 1863.

Muster-in to date June 30, 1863.

Joined for duty and enrolled:

When June 30, 1863.*

Where Philadelphia Pa.

Period 3 years.*

Remarks:

*☞ Muster-in roll shows enrollment of all men of this company as of same date and place. See enrollment on subsequent card or cards.

Book mark:

Martin

(356c)

Copyist.

M | 3 | U.S.C.T.

Elias Milford

Sergt, Co. B, 3 Reg't U. S. Col'd Infantry.

Appears on

Company Muster Roll

for July & Aug., 1863.

Joined for duty and enrolled:

When June 30, 1863.*

Where Phil. Pa. *

Period 3 years.*

Present or absent Present

Stoppage, $ 100 for

Due Gov't $ 100 for

Remarks: Apptd. Sergt. July 4, 1863.

* ☞ See enrollment on card from muster-in roll.

Book mark:

W. H. Martin

(358c) Copyist.

M. | 3 | U.S.C.T.

Elias Milford

Sergt., Co. B, 3 Reg't U. S. Col'd Infantry.

Appears on

Company Muster Roll

for Sept Oct, 1863.

Joined for duty and enrolled:

When June 30, 1863.*

Where Phil. Pa.*

Period 3 years.*

Present or absent Present

Stoppage, $ 100 for

Due Gov't, $ 100 for

Remarks:

* ☞ See enrollment on card from muster-in roll.

Book mark:

Martin

(358c) Copyist.

W. | 3 | U.S.C.T.

Elias Milford

Serg't, Co. B, 3 Reg't U. S. Col'd Infantry.

Appears on

Company Muster Roll

for Nov & Dec, 1863.

Joined for duty and enrolled:

When June 30, 1863.*

Where Phil. Pa.*

Period 3 years.*

Present or absent Present

Stoppage, $ 100 for

Due Gov't $ 100 for

Remarks:

* ☞ See enrollment on card from muster-in roll.

Book mark:

Martin

(358c) Copyist.

M. | 3 | U.S.C.T.

Elias Milford

Sergt, Co. B, 3 Reg't U. S. Col'd Infantry.

Appears on

Company Muster Roll

for Jan & Feb, 1864

Joined for duty and enrolled:

When June 30, 1863.*

Where Phil. Pa *

Period 3 years.*

Present or absent Present

Stoppage, $ 100 for

Due Gov't $ 100 for

Remarks:

* ☞ See enrollment on card from muster-in roll.

Book mark:

Martin

(358c) *Copyist.*

M | 3 | U.S.C.T.

Elias Milford

Sergt., Co. B, 3 Reg't U. S. Col'd Infantry.

Appears on

Company Muster Roll

for Mar. & Apr., 1864.

Joined for duty and enrolled:

When June 30, 1863.*

Where Philadelphia Pa.*

Period 3 years.*

Present or absent Present

Stoppage, $.....100 for.....

Due Gov't $.....100 for.....

Remarks:.....

* See enrollment on card from muster-in roll.

Book mark:.....

(858c) J. McFarley

Copyist.

M | 3 | U.S.C.T.

Elias R. Milford

Sergt, Co. B, 3 Reg't U. S. Col'd Infantry.

Appears on

Company Muster Roll

for May & June, 1864.

Joined for duty and enrolled:

When June 30, 1863.*

Where Philad Pa.*

Period 3 years.*

Present or absent Present

Stoppage, $ 100 for

Due Gov't, $ 100 for

Remarks:

☞ See enrollment on card from muster-in roll.

Book mark:

Washington

(358c) Copyist.

M | 3 | U.S.C.T.

Elias R. Milford

Sergt, Co. B, 3 Reg't U. S. Col'd Infantry.

Appears on

Company Muster Roll

for May June July & Aug, 1864.

Joined for duty and enrolled:

When June 30, 1863.*

Where Philad Pa.*

Period 3 years.*

Present or absent Present

Stoppage, $ 100 for

Due Gov't, $ 100 for

Remarks: Free on or before April 19th 1861

* See enrollment on card from muster-in roll.

Book mark:

Washington

(358c) Copyist.

M | 3 | U.S.C.T.

Elias R. Milford

Sergt., Co. B, 3 Reg't U. S. Col'd Infantry.

Appears on

Company Muster Roll

for Sept & Oct, 186 4.

Joined for duty and enrolled:

When June 30, 186 3.*

Where Phila & Pa *

Period 3 years.*

Present or absent Present

Stoppage, $ 100 for

Due Gov't $ 100 for

Remarks: Free on or before April 19th 1861.
Due Soldier diff^c pay ($10 per Mo) July & Aug 63. (2 Mo)

* See enrollment on card from muster-in roll.

Book mark:

(358c) W Washington

Copyist.

M | 3 | U.S.C.T.

Elias R. Milford

Sergt., Co. B, 3 Reg't U. S. Col'd Infantry.

Appears on

Company Muster Roll

for Sept. Oct. Nov. & Dec., 1864.

Joined for duty and enrolled:

When July 30th, 1863.*

Where Phila. Pa *

Period 3 years.*

Present or absent Present

Stoppage, $ 100 for

Due Gov't $ 100 for

Remarks: Free on or before April 19th 1861. Due soldier dif. pay $10 per mo. from June 29th 1863 to Aug. 31st 1863.

* ☞ See enrollment on card from muster-in roll.

Book mark:

Washington

(358c) Copyist.

NARA1530

M | 3 | U.S.C.T.

Elias Milford

Sergt, Co. B, 3 Reg't U. S. Col'd Infantry.

Appears on

Company Muster Roll

for from Aug 31/64 to Feb 28, 1865.

Joined for duty and enrolled:

When June 30, 1863.*

Where Phila^d Pa *

Period 3 years.*

Present or absent Present

Stoppage, $ 100 for

Due Gov't $ 100 for

Remarks: Free on or before April 19th 1861. Due soldier dif pay $10 per mo from Enrollment to Aug 31st 1863

* See enrollment on card from muster-in roll.

Book mark:

(858c) Wandlington

Copyist.

M | 3 | U.S.C.T.

Elias R Milford

Sgt., Co. B, 3 Reg't U. S. Col'd Inf

Appears on

Company Muster Roll

for Mch & Apl 1865.

Joined for duty and enrolled:

When June 30, 1863*

Where Phila Pa *

Period 3 years.*

Present or absent Present

Stoppage, $ 100 for

Due Gov't, $ 100 for

Valuation of horse, $ 100

Valuation of horse equipments, $ 100

Remarks: Dec on or before Apl 19/61 Due Soldier dif pay $10 per mo from enrollmt to Aug 31/63

* See enrollment on card from muster-in roll.

Book-mark:

W. M. Jackson

(358c) Copyist.

M | 3 | U.S.C.T.

Elias R. Milford.

Sgt, Co. B, 3 Reg't U. S. Col'd Infantry.

Appears on

Company Muster Roll

for May and June, 1863.

Joined for duty and enrolled:

When June 30, 1863*

Where Phila., Pa.*

Period 3 years.*

Present or absent Present.

Stoppage, $ 100 for

Due Gov't $ 100 for

Remarks: Free on or before April 19, 1861. Due soldier dif. of pay $10. per mo. from enrollment to Aug. 31, 1863.

NEXT ROLL ON FILE MUSTER OUT.

* ☞ See enrollment on card from muster-in roll.

Book mark:

Calloway.

(358c) Copyist.

M | 3 | U.S.C.T.

Elias R. Milford

Sgt., Co. B, 3 Reg't U. S. Col'd Infantry.

Appears on Co. Muster-out Roll, dated Jacksonville, Fla. Oct. 31, 1865.

Muster-out to date Oct. 31, 1865.

Last paid to June 30, 1865.

Clothing account:

Last settled ....., 186 ; drawn since $ 100

Due soldier $ 5 49/100; due U. S. $ 100

Am't for cloth'g in kind or money adv'd $ 100

Due U. S. for arms, equipments, &c., $ 6 00/100

Bounty paid $ ..... 100; due $ 100 100

Remarks: Sergeant from enrollment.

Book mark:

M. M. Jackson

(361) Copyist.

Milford Emery

Co C, 3 U.S. Col'd Inf.

Private Private

CARD NUMBERS.

1	6253602	26	
2	6253645	27	
3	6253766	28	
4	6253849	29	
5	6253929	30	
6	6254005	31	
7	6254064	32	
8	6254162	33	
9	6254240	34	
10	6254319	35	
11	6254395	36	
12	6254464	37	
13	6254579	38	
14	6254665	39	
15	9060684	40	
16		41	
17		42	
18		43	
19		44	
20		45	
21		46	
22		47	
23		48	
24		49	
25		50	

Book Mark:

See also

$173.0817 P.O. Money

A.G. 255.3372 Certain ...

3/20/17 [illegible]

M | 3 | U.S.C.T.

Emery Milford

B, Co. ....., 3 Reg't U. S. Col'd Inf.

Appears on

Company Descriptive Book

of the organization named above.

DESCRIPTION.

Age 19 years; height 5 feet 6 inches.

Complexion Black

Eyes Black, hair Black

Where born Lancaster Co. Penna

Occupation Laborer

ENLISTMENT.

When June 30, 1863.

Where Philadelphia

By whom Lt. Col. Wagner, term 3 y'rs.

Remarks:

H Everson

(383y) Copyist.

W | 3 | U.S.C.T.

Emery Milford

Priv, Co. B, 3 Reg't U. S. Col'd Infantry.

Age 19 years.

Appears on

Company Muster-in Roll

of the organization named above. Roll dated Phil Pa., Aug 7, 1863.

Muster-in to date June 30, 1863.

Joined for duty and enrolled:

When June 30, 1863.*

Where Phil. Pa.,*

Period 3 years.*

Remarks:

*☞ Muster-in roll shows enrollment of all men of this company as of same date and place. See enrollment on subsequent card or cards.

Book mark:

Martin

(356c) Copyist.

M. | 3 | U.S.C.T.

Emery Milford

Priv., Co. B, 3 Reg't U. S. Col'd Infantry.

Appears on

Company Muster Roll

for July & Aug., 1863.

Joined for duty and enrolled:

When June 30, 1863.*

Where Phil. Pa. *

Period 3 years.*

Present or absent Present

Stoppage, $.....100 for.....

Due Gov't $.....100 for.....

Remarks:.....

* ☞ See enrollment on card from muster-in roll.

Book mark:.....

Martin

(858c) Copyist.

M. | 3 | U.S.C.T.

Emery Milford

Priv., Co. B, 3 Reg't U. S. Col'd Infantry.

Appears on

Company Muster Roll

for Sept Oct, 1863.

Joined for duty and enrolled:

When June 31, 1863.*

Where Phil. Pa. *

Period 3 years.*

Present or absent Present

Stoppage, $ 100 for

Due Gov't $ 100 for

Remarks:

* See enrollment on card from muster-in roll.

Book mark:

Martin

(358c) Copyist.

M. | 3 | U.S.C.T.

Emerey Milford

Priv, Co. B, 3 Reg't U. S. Col'd Infantry.

Appears on

Company Muster Roll

for Nov. & Dec., 1863.

Joined for duty and enrolled:

When June 30, 1863.*

Where Phil. Pa.*

Period 3 years.*

Present or absent Present.

Stoppage, $ 100 for

Due Gov't $ 100 for

Remarks:

* ☞ See enrollment on card from muster-in roll.

Book mark:

Martin

(858c) *Copyist.*

W. | 3 | U.S.C.T.

Emery Milford

Priv., Co. B, 3 Reg't U. S. Col'd Infantry.

Appears on

Company Muster Roll

for Jan & Feb, 1864

Joined for duty and enrolled:

When June 30, 1863.*

Where Phil. Pa.*

Period 3 years.*

Present or absent Present

Stoppage, $ 100 for

Due Gov't $ 100 for

Remarks:

* ☞ See enrollment on card from muster-in roll.

Book mark:

Martin

(358c) Copyist.

M | 3 | U.S.C.T.

Emery Milford

Asst., Co. B, 3 Reg't U. S. Col'd Infantry.

Appears on

Company Muster Roll

for Mar & Apr, 1864.

Joined for duty and enrolled:

When June 30, 1863.*

Where Philadelphia Pa.*

Period 3 years.*

Present or absent Present

Stoppage, $ 100 for

Due Gov't, $ 100 for

Remarks: Stop for Canteen

* See enrollment on card from muster-in roll.

Book mark:

J. McFarlay

(358c) Copyist.

M | 3 | U.S.C.T.

Emery Milford

Pvt., Co. B, 3 Reg't U. S. Col'd Infantry.

Appears on

Company Muster Roll

for May & June, 1864.

Joined for duty and enrolled:

When June 30., 1863.*

Where Philad. Pa. *

Period 3 years.*

Present or absent Present

Stoppage, $ 100 for

Due Gov't, $ 100 for

Remarks: Stop. for 1 canteen

* See enrollment on card from muster-in roll.

Book mark:

Washington

(358c) Copyist.

M | 3 | U.S.C.T.

Emory Milford

Pvt., Co. B, 3 Reg't U. S. Col'd Infantry.

Appears on

Company Muster Roll

for May June July & Aug., 1864.

Joined for duty and enrolled:

When June 30, 1863.*

Where Philad. Pa *

Period 3 years.*

Present or absent Present

Stoppage, $ 100 for

Due Gov't $ 100 for

Remarks: Free on or before April 19th 1861. Stop for 1 canteen

* ☞ See enrollment on card from muster-in roll.

Book mark:

Washington

(858c) Copyist.

NARA1545

M | 3 | U.S.C.T.

Emery Milford

Priv, Co. B, 3 Reg't U. S. Col'd Infantry.

Appears on

Company Muster Roll

for Sept & Oct, 1864.

Joined for duty and enrolled:

When June 30, 1863.*

Where Phila^d Pa *

Period 3 years.*

Present or absent Present

Stoppage, $ 100 for

Due Gov't $ 100 for

Remarks: Free on or before April 19" 1861 — Due soldier dif^c pay ($3 per Mo.) from June 29"/63 to Aug 31"/63

* See enrollment on card from muster-in roll.

Book mark:

(358c) Washington Copyist.

NARA1546

M | 3 | U.S.C.T.

Emery Milford

Pvt, Co. B, 3 Reg't U. S. Col'd Infantry.

Appears on

Company Muster Roll

for Sept Oct Nov & Dec, 1864.

Joined for duty and enrolled:

When June 30, 1863.*

Where Phila'd Pa *

Period 3 years.*

Present or absent Present

Stoppage, $ 100 for

Due Gov't $ 100 for

Remarks: Since on or before April 19th 1866 Due soldier dif pay $3 per mo from June 29th 1863 to Aug 31st 1863.

* See enrollment on card from muster-in roll.

Book mark:

(358c) Waddington Copyist.

M | 3 | U.S.C.T.

Emery Milford

Pvt., Co. B, 3 Reg't U. S. Col'd Infantry.

Appears on

Company Muster Roll

for from Aug 31/64 to Feb 28, 1865.

Joined for duty and enrolled:

When June 30, 1863.*

Where Phila^d Pa *

Period 3 years.*

Present or absent Present

Stoppage, $ 100 for

Due Gov't $ 100 for

Remarks: Free on or before April 19 1861. Due soldier dif pay $3 per mo from Enrollment to Aug. 31. 1863

* ☞ See enrollment on card from muster-in roll.

Book mark:

Wauldin Wm

(358c) Copyist.

M | 3 | U.S.C.T.

Emery Milford
Pvt., Co. B, 3 Reg't U. S. Col'd Infantry.

Appears on

Company Muster Roll

for Mch & Apl, 1865

Joined for duty and enrolled:

When June 30, 1863*

Where Philadelphia Pa. *

Period 3 years.*

Present or absent Present

Stoppage, $ ..... 100 for .....

Due Gov't, $ ..... 100 for .....

Remarks: Free on or before Apl. 19/61. Due soldier dif pay $3 per mo. from enrollment to Aug 31, 1863.

* See enrollment on card from muster-in roll.

Book mark:

T. M. Jackson

(358e) Copyist.

M | 3 | U.S.C.T.

Emery Milford

Pvt., Co. B, 3 Reg't U. S. Col'd Infantry.

Appears on

Company Muster Roll

for May and June, 186 4.

Joined for duty and enrolled:

When June 30, 1863*

Where Phila. Pa. *

Period 3 years.*

Present or absent Present.

Stoppage, $ 100 for

Due Gov't $ 100 for

Remarks: Free on or before Apl 1861. Due soldier dif. pay $6 per mo. from enrollment to Apl 30.64.

NEXT ROLL ON FILE MUSTER OUT.

* ☞ See enrollment on card from muster-in roll.

Book mark:

Calloway.

(858c) Copyist.

M | 3 | U.S.C.T.

Emery Milford

Priv., Co. B, 3 Reg't U. S. Col'd Infantry.

Appears on **Co. Muster-out Roll,** dated Jacksonville, Fla., Oct. 31, 1865.

Muster-out to date Oct. 31, 1865.

Last paid to June 30, 1865.

Clothing account:

Last settled....., 186 ; drawn since $....100

Due soldier $ 1 65/100; due U. S. $....100

Am't for cloth'g in kind or money adv'd $....100

Due U. S. for arms, equipments, &c., $ 6 00/100

Bounty paid $....100; due $ 100 100

Remarks: Private from enrollment.

Book mark:

M M Jackson

(361) Copyist.

797 or [illegible]

Milford James

Co. E, 3 U.S. Col'd Inf.

Corporal Corporal

CARD NUMBERS.

1	625-3535-5-	26	
2	625-3636	27	
3	625-3722	28	
4	625-3804	29	
5	625-3843	30	
6	625-3963	31	
7	625-4041	32	
8	625-4119	33	
9	625-4197	34	
10	625-4274	35	
11	625-4352	36	
12	625-4430	37	
13	625-4524	38	
14	625-4619	39	
15	906063-9	40	
16		41	
17		42	
18		43	
19		44	
20		45	
21		46	
22		47	
23		48	
24		49	
25		50	

Book Mark:

See also

S 1720180 P.O. Ma m

M | 3 | U.S.C.T.

James Mifford

, Co. B, 3 Reg't U. S. Col'd Inf.

Appears on

Company Descriptive Book

of the organization named above.

DESCRIPTION.

Age 18 years; height 5 feet 4 inches.

Complexion black

Eyes black; hair black

Where born Lancaster Co. Penn

Occupation Laborer

ENLISTMENT.

When June 30, 1863

Where Philadelphia

By whom Col Wagner, term 3 y'rs.

Remarks:

Harrison

(383y) Copyist.

M. | 3 | U.S.C.T.

James Milford

Corp., Co. B, 3 Reg't U. S. Col'd Infantry.

Age 19 years.

Appears on

Company Muster-in Roll

of the organization named above. Roll dated Phil. Pa., Aug 7, 1863.

Muster-in to date June 30, 1863.

Joined for duty and enrolled:

When June 30, 1863.*

Where Phil., Pa.,

Period 3 years.*

Remarks:

*☞ Muster-in roll shows enrollment of all men of this company as of same date and place. See enrollment on subsequent card or cards.

Book mark:

Martin

(356c)

Copyist.

W | 3 | U.S.C.T.

James Milford

Corp., Co. B, 3 Reg't U. S. Col'd Infantry.

Appears on

Company Muster Roll

for July & Aug., 1863.

Joined for duty and enrolled:

When June 30, 1863.*

Where Phil. Pa.*

Period 3 years.*

Present or absent Present

Stoppage, $ 100 for

Due Gov't $ 100 for

Remarks: Apptd. Corp. July 4, 1863.

* ☞ See enrollment on card from muster-in roll.

Book mark:

Martin

(358c) Copyist.

M. | 3 | U.S.C.T.

James Milford

Corp., Co. B, 3 Reg't U. S. Col'd Infantry.

Appears on

Company Muster Roll

for Sept & Oct, 1863.

Joined for duty and enrolled:

When June 20, 1863.*

Where Phil., Pa.*

Period 3 years.*

Present or absent Present.

Stoppage, $ 100 for

Due Gov't, $ 100 for

Remarks:

* See enrollment on card from muster-in roll.

Book mark:

Martin

(358c) Copyist.

W. | 3 | U.S.C.T.

James Milford

Pvt., Co. B, 3 Reg't U. S. Col'd Infantry.

Appears on

Company Muster Roll

for Nov. & Dec, 1863.

Joined for duty and enrolled:

When June 30, 1863.*

Where Phil. Pa.*

Period 3 years.*

Present or absent Present.

Stoppage, $ 100 for

Due Gov't $ 100 for

Remarks:

* ☞ See enrollment on card from muster-in roll.

Book mark:

Martin

(858c) Copyist.

HARRISS

W. | 3 | U.S.C.T.

James Milford

Corp., Co. B, 3 Reg't U. S. Col'd Infantry.

Appears on

Company Muster Roll

for Jan & Feb, 1864.

Joined for duty and enrolled:

When June 30, 1863.*

Where Phil. Pa. *

Period 3 years.*

Present or absent Present

Stoppage, $.....100 for.....

Due Gov't $.....100 for.....

Remarks:.....

* ☞ See enrollment on card from muster-in roll.

Book mark:.....

Martin

(858c) *Copyist.*

NARA1559

M | 3 | U.S.C.T.

James Milford

Corpl, Co. B, 3 Reg't U. S. Col'd Infantry.

Appears on

Company Muster Roll

for Mch & Apr, 1864.

Joined for duty and enrolled:

When June 30, 1863.*

Where Philadelphia Pa. *

Period 3 years.*

Present or absent Present

Stoppage, $ 100 for

Due Gov't $ 100 for

Remarks:

* See enrollment on card from muster-in roll.

Book mark:

J. M. Fairly
Copyist.

(358c)

M | 3 | U.S.C.T.

James A. Milford

Corp., Co. B, 3 Reg't U. S. Col'd Infantry.

Appears on

Company Muster Roll

for May & June, 1864.

Joined for duty and enrolled:

When June 30", 1863.

Where Philad Pa *

Period 3 years.*

Present or absent Present

Stoppage, $ 100 for

Due Gov't, $ 100 for

Remarks:

* ☞ See enrollment on card from muster-in roll.

Book mark:

Washington

(358c) Copyist.

M | 3 | U.S.C.T.

James A. Milford

Corp., Co. B, 3 Reg't U. S. Col'd Infantry.

Appears on

Company Muster Roll

for May June July & Aug, 1864.

Joined for duty and enrolled:

When June 30, 1863.*

Where Philad. Pa.*

Period 3 years.*

Present or absent Absent

Stoppage, $ 100 for

Due Gov't, $ 100 for

Remarks: Absent sick in G. H. at Jacksonville Fla. since July 20th 1864.

* See enrollment on card from muster-in roll.

Book mark:

Washington

(358e) Copyist.

NARA 1562

M | 3 | U.S.C.T.

~~Thos~~ James A. Milford

Corpl, Co. B, 3 Reg't U. S. Col'd Infantry.

Appears on

Company Muster Roll

for Sept & Oct, 1864.

Joined for duty and enrolled:

When June 30, 1863.*

Where Phila Pa *

Period 3 years.*

Present or absent absent

Stoppage, $ 100 for

Due Gov't $ 100 for

Remarks: Free on or before April 19" 1861. Absent sick in Genl. Hospital Jacksonville Fla. since July 20" 1864

* corrected by Thos. E. Hatch Exm

* See enrollment on card from muster-in roll.

Book mark:

(358c) Washington
Copyist.

M | 3 | U.S.C.T.

James A. Milford

Corpl., Co. B, 3 Reg't U. S. Col'd Infantry.

Appears on

Company Muster Roll

for Sept. Oct. Nov. & Dec., 1864.

Joined for duty and enrolled:

When June 30th, 1863.*

Where Phila. Pa *

Period 3 years.*

Present or absent Absent

Stoppage, $ 100 for

Due Gov't $ 100 for

Remarks: Free on or before April 19th 1861. — Due soldier dif. pay ($6 per mo.) from June 29th 1863 to Aug. 31st 1863. — Absent sick in G. H. Beaufort S.C. since July 20th 1864

* ☞ See enrollment on card from muster-in roll.

Book mark:

Washington

(358c) Copyist.

M | 3 | U.S.C.T.

James A Milford

Corpl, Co. B, 3 Reg't U. S. Col'd Infantry.

Appears on

Company Muster Roll

for from Aug 31/64 to Feb 28, 186 5.

Joined for duty and enrolled:

When July 30, 186 3.*

Where Phila Pa *

Period 3 years.*

Present or absent Present

Stoppage, $ 100 for

Due Gov't $ 100 for

Remarks: Free on or before April 19th 1861. Due soldier diff pay $3 per mo. from Enrollment to Aug 31st 1863. Returned from Hosptl. Feb 7th 1865

* ☞ See enrollment on card from muster-in roll.

Book mark:

Washington

(358c) Copyist.

M | 3 | U.S.C.T.

James A. Milford

~~Corp.~~, Co. B, 3 Reg't U. S. Col'd Infantry.

Appears on

Company Muster Roll

for Mch & Apl, 1863

Joined for duty and enrolled:

When June 30, 1863*

Where Phila, Pa. *

Period 3 years.*

Present or absent Present

Stoppage, $ ..... 100 for .....

Due Gov't, $ ..... 100 for .....

Remarks: Free on or before Apl 19/61. Due soldier dif pay $3 per mo from enrollment to ~~Apl 30/64~~ Aug 31/63

* See enrollment on card from muster-in roll.

Book mark: .....

M. M. Jackson

(358c) Copyist.

M | 3 | U.S.C.T.

James A. Milford,

Corpl, Co. B, 3 Reg't U. S. Col'd Infantry,

Appears on

Company Muster Roll

for May and June, 1865.

Joined for duty and enrolled:

When June 30, 1863.*

Where Phila. Pa. *

Period 3 years.*

Present or absent Present.

Stoppage, $ 100 for

Due Gov't $ 100 for

Remarks: Freeman or before Apl 19, 1861. Due soldier Lib. pay $6, 3 per mo. from enrollment* to Aug. 31, 63.

NEXT ROLL ON FILE MUSTER OUT.

* See enrollment on card from muster-in roll.

Book mark:

Calloway.

(358c) Copyist.

NARA1567

M | 3 | U.S.C.T.

James A. Milford

Corp, Co......, 3 Reg't U. S. Col'd Infantry.

Appears on Co. Muster-out Roll, dated

Jacksonville, Fla. Oct. 31, 1865.

Muster-out to date Oct 31, 1865.

Last paid to June 30, 1865.

Clothing account:

Last settled........., 186 ; drawn since $......$\frac{}{100}$

Due soldier $ 16 $\frac{00}{100}$; due U. S. $........$\frac{}{100}$

Am't for cloth'g in kind or money adv'd $......$\frac{}{100}$

Due U. S. for arms, equipments, &c., $ 6 $\frac{00}{100}$

Bounty paid $........$\frac{}{100}$; due $ 100 $\frac{}{100}$

Remarks: Corpl from entollment.

Book mark:

W. M. Jackson
Copyist.

(361)

NARA1568

Milford James

Corpl, Co. B, 3 Reg't U.S.C.I.

Enclosures.

Bed Cards
Burial Records
Certs. of Dis. for Discharge
C. M. Charges
Descriptive Lists
Discharge Certificates
Enlistment Papers
Final Statements
Furloughs or L. of A.
Med. Certificates
Med. Des. Lists
Orders
Pris. of War Record
Resignations

Other papers relating to—

Admission to Hosp'l
Casualty Sheet
Confinement
Contracts
Death or Effects
Desertion
Discharge from Hosp'l
Discharge from Service
Duty
Furlough or L. of A.
Med. Examination
Misc. Information
Pay or Clothing
Personal Reports
Rank
Transfer to Hosp'l
Transfer to V. R. C.
Transportation

NARA1569

Special Orders
No 134

Mulford James A
Comm B. 3. M. S. C. T.

Head Quarters U. S. Forces E. Fla,
Jacksonville Fla
July 19th 1865

Special Orders
No 134

XIII Corpl. James A. Milford Co. B.
3rd U. S. C. T. is hereby detailed for duty in the Provost Marshals Office and will report to Lt. R. C. Loveridge, Provost Marshal Jacksonville without delay.

By Order of
Brig. Genl. J. Vogdes
[signature]
Asst. Adjt. General

Lt. R. C. Loveridge
Provost Marshal

NARA1571

Milford James
Corpl B 3 USCT

NARA 1572

Head-Quarters District of East Florida,

1st Separate Brigade, D. F.

Jacksonville, Fla., Oct 17th 1865.

Special Orders }
No 182 }

, Extract,

The following named Enlisted men of the 3rd U.S.C.T. are hereby relieved from duty in the Dept where they are serving and will report to their Regimental Commdr for duty without delay

James Milford Corp Co "B" 3rd U.S.C.T.

By order of
Col. W. H. Marple
S. L. McHenry
A. A. Genl

At Pro. Marshal Jacksonville

Capt R. C. Loveridge
Provost Marshal Jacksonville

Giller, Alexander

Co. E, 3 U.S. Col'd Inf.

Private | Private

CARD NUMBERS.

1	625-1490	26	
2	625-1324	27	
3	625-4132	28	
4	625-4244	29	
5	625-4327	30	
6	9061053	31	
7	43150926	32	
8	43152428	33	
9		34	
10		35	
11		36	
12		37	
13		38	
14		39	
15		40	
16		41	
17		42	
18		43	
19		44	
20		45	
21		46	
22		47	
23		48	
24		49	
25		50	

Book Mark:

See also

R HP773055

NARA1575

M
A | 3 | U.S.C.T.

Miller[2] Alexander[1]

, Co. E, 3 Reg't U. S. Col'd Inf.

Appears on

Company Descriptive Book

of the organization named above.

DESCRIPTION.

Age 22 years; height 5 feet 8 inches.

Complexion Col'd

Eyes Black; hair Black.

Where born Substitute, Maryland

Occupation Cook.

ENLISTMENT.

When March 30, 1865.

Where Camden N. J.

By whom 28 Enrol Dis N.J. term 3 y'rs.

Remarks: Clothing $35.58 due
Joseph Thomas Co I $200.
which sum Miller defrauded
him.

Corrected by Keipe[1]

(383g) R. Springsteen Copyist.

NARA1576

M | 3 | U.S.C.T.

Alexander Miller

Appears with rank of Pvt on

Muster and Descriptive Roll of a Detachment of Substitutes forwarded

for the 3 Reg't U. S. Col'd Inf. Roll dated

Not Dated, , 186 .

Where born Maryland

Age 22 y'rs; occupation Cook

When enlisted , 186 .

Where enlisted

For what period enlisted 3 years.

Eyes Blk; hair Blk

Complexion Cold; height 5 ft. 8 in.

When mustered in May 30, 1864.

Where mustered in Camden

Bounty paid $ 100; due $ 100

Where credited

Company to which assigned

Remarks Sub for Geo. W. Pearce N. Jersey 2 8 Dist-

Book mark:

Scott
Copyist

(339)

NARA1577

3 4 a

M | 3 Inf't | U.S.C.T.

Alex. Miller (Col'd.)

Appears with rank of Private on

Muster and Descriptive Roll

of Detachment of colored Substitutes for colored drafted men forwarded

Roll dated

Camden, N.J., June 1, 1864.

Where born Maryland

Age 22 y'rs; occupation Cook

Drafted and mustered in:

When May 30, 1864.

Where Camden, N.J.

Enrollment district 28

Period 3 years.

Eyes Black; hair Black

Complexion Colored; height 5 ft. 8 in.

Bounty paid $ ___ 100; due $ ___ 100

Clothing account:

Last settled ___, 186 ; drawn since $14 95/100

Date of commencement of service May 30, 1864.

Company to which assigned

Remarks: Substitute for George W. Pearce, (Col'd.), of W.A. Creek Tp., Salem Co.

Book mark:

W. W. Hibbard

(356m) Copyist.

3 Inf

M | | U.S.C.T.

Alexander Miller

Appears with rank of Pvt. on

Muster and Descriptive Roll

of Detachment of Colored Substitutes for Drafted Men forwarded to Camp William Penn Phila Pa. Roll dated Camp Prime Trenton N.J., Feb 7, 1865.

Where born Maryland

Age 22 years; occupation Cook

When enlisted May 30, 1864.

Where enlisted Camden N.J.

For what period enlisted 3 years.

Eyes black; hair black

Complexion Coed; height 5 ft. 8 in.

When mustered in , 186 .

Where mustered in

Bounty paid $ 100; due $ 100

Clothing account:

Last settled , 186 ; drawn ~~since~~ $ 31 66/100

Date of first muster , 186 .

Company to which assigned Comp. Dist. 1

Remarks: No of Enrollment Dist 128, Substitute for George H. Pearce Received $ 13.00 advance pay

Book mark :

R. W. Fish

(356m) Copyist.

Co. I 9. | U.S.C.T.

Alexander Miller

Appears with rank of Private on

Muster and Descriptive Roll of a Detachment of Drafted Men and Substitutes forwarded

for the 9 Reg't U. S. Col'd Inf. Roll dated Chestnut Hill, Pa. Camp Williams Penn, May 8th, 1865.

Where born Maryland.

Age 22 years; occupation Cook.

~~Drafted and~~ mustered in:

When May 30th, 1864.

Where Camden, N. J.

Period 9 years.

Eyes Blk; hair Blk.

Complexion Col'd; height 5 ft. 8 in.

Paid bounty and advance pay, $ 100

Bounty due $ 100

Where credited

Company to which assigned

Remarks: Substitute for Geo. W. Pearce, N. J. 2d. Cong. Dist.

Book mark: (over)

J. D. Casey

(340) Copyist

JAN. 19 6251524 1891

Due Joseph Thomas $200 00 of which sum Miller defrauded him.

NARA1591

M | 3 | U.S.C.T.

Alexander Miller

Pvt., Co. E, 3 Reg't U. S. Col'd Infantry.

Appears on

Company Muster Roll

for May & June, 1865.

Present or absent Present

Stoppage, $ ...... 100 for ......

Due Gov't, $ ...... 100 for ......

Remarks: Recruit — Due from enlistment

Book mark: ......

W L Houston
Copyist

(858)

MW | 3 | U.S.C.T.

Alexander Miller

Pvt, Co. E, 3 Reg't U. S. Col'd Infantry.

Appears on

Company Muster Roll

for July & Aug, 186 5.

Present or absent Present

Stoppage, $ 100 for

Due Gov't, $ 100 for

Remarks:

Book mark:

(358) Joseph Stewart

Copyist

N | 3 | U.S.C.T.

Alexander Miller

Priv, Co. E, 3 Reg't U. S. Col'd Infantry.

Appears on **Co. Muster-out Roll,** dated Jacksonville Fla, Oct 31, 186 5.

Muster-out to date Oct 31, 186 5.

Last paid to June 30, 186 5.

Clothing account:

Last settled....., 186 ; drawn since $....100

Due soldier $ 34 36/100; due U. S. $....100

Am't for cloth'g in kind or money adv'd $....100

Due U. S. for arms, equipments, &c., $....100

Bounty paid $....100; due $....100

Remarks: Private from enlistment

Book mark:

(361) Joseph Stewart

Copyist.

Miller Alexander

P, Co. E, 3 Reg't U.S.C.I.

2 Enclosures.

Bed Cards	Final Statements
Burial Records	Furloughs or L. of A.
Certs. of Dis. for Discharge	Med. Certificates
C. M. Charges	Med. Des. Lists
Descriptive Lists	Orders
Discharge Certificates	Pris. of War Record
Enlistment Papers 2	Resignations

Other papers relating to—

Admission to Hosp'l	Furlough or L. of A.
Casualty Sheet	Med. Examination
Confinement	Misc. Information
Contracts	Pay or Clothing
Death or Effects	Personal Reports
Desertion	Rank
Discharge from Hosp'l	Transfer to Hosp'l
Discharge from Service	Transfer to V. R. C.
Duty	Transportation

DECLARATION OF SUBSTITUTE.

I, Alexander Pearce (Cold) desiring to ENLIST in the **Army of the United States**, for THREE YEARS, ***Do declare,*** That I am 22 years ~~and~~ ~~months~~ of age; that I have never been discharged from the United States service on account of disability or by sentence of a court martial; and I know of no impediment to my serving honestly and faithfully as a soldier for three years.

GIVEN at Camden N.J.

the 30 day of May 1864

WITNESS:

Alex Wentz
Capt & Prov. Mar.
1st Dist N.J.

Alex his X mark Miller

3 U.S.C. Inf'y Mo

No. 24

Alexander Miller (Cold)

Enlisted at Camden N.J

As Substitute for

George W Pearce (Cold)

On the 30 day of May, 1864.

By

A. Wentz, Capt & P.M.

P. J. Gray, Commr.

J. R. Stevenson, Surg.

Board of Enrollment,

1st Dist. of N.J

NARA1586

(No. 40.)

SUBSTITUTE

VOLUNTEER ENLISTMENT.

STATE OF New Jersey — TOWN^ship^ OF U. A. Creek Salem Co.

I, Alexander Miller, (Col^d^) born in the State of Maryland, aged 22 years, and by occupation a Cook DO HEREBY ACKNOWLEDGE to have agreed with George W. Pearce (Col^d^), Esq., of U. A. Creek Tp 28 Salem Co. N. J. to become his **SUBSTITUTE** in the Military Service, for a sufficient consideration paid and delivered to me, on the 30th day of May, 1864; and having thus agreed with said George W. Pearce, I DO HEREBY ACKNOWLEDGE to have enlisted this 30th day of May, 1864, to serve as a ***Soldier*** in the **Army of the United States of America,** for the period of *THREE YEARS*, unless sooner discharged by proper authority: I do also agree to accept such bounty, pay, rations, and clothing, as are, or may be, established by law for soldiers. And I do solemnly swear that I will bear true and faithful allegiance to the ***United States of America;*** that I will serve them honestly and faithfully against all their enemies or opposers whomsoever; and that I will observe and obey the orders of the President of the United States, and the orders of the Officers appointed over me, according to the Rules and Articles of War.

SWORN and subscribed to, at Camden N. J.
this 30 day of May 1864 } Alex. his X Miller mark
BEFORE Alex Wentz
Capt & Prov. Mar. 1st Dist. N. J.

We certify, on honor, That we have carefully examined the above-named Volunteer Substitute agreeably to the Regulations, and that, in our opinion, he is free from all bodily defects and mental infirmity which would in any way disqualify him from performing the duties of a soldier; that he was entirely sober when enlisted; that he is of lawful age, (not under 18 years;) and that, in accepting him as duly qualified to perform the duties of an able-bodied soldier, and as a Substitute in lieu of George W. Pearce, drafted in U. A. Creek Tp. Salem Co. N. J. May 5, 1864, we have strictly observed the Regulations which govern in such cases. This soldier has Black eyes, Black hair, Colored complexion; is 5 feet 8 inches high.

Alex Wentz Capt &
Provost Marshal.

P. L. Gray
Commissioner of Board.

Jno. R. Stevenson
Surgeon of Board.

Board of Enrollment of 1st *Dist. of* N. J.

NARA1587

DECLARATION OF SUBSTITUTE.

I, Alexander Miller (Cold) desiring to ENLIST in the **Army of the United States**, for THREE YEARS, ***Do declare***, That I am 22 years ~~and~~ ———— ~~months~~ of age; that I have never been discharged from the United States service on account of disability or by sentence of a court martial; and I know of no impediment to my serving honestly and faithfully as a soldier for three years.

GIVEN at Camden N. J.
the 30 day of May 1864

WITNESS:

Alex Wentz
Capt & Prov. Mar
1st Dist N. J.

Alex his X mark Miller

D.M.

No. ....

Alexander Miller (Cold)
Enlisted at Camden N. J.
As Substitute for
George W. Pearce (Cold)
On the 30 day of May, 1864.
By
A. Wentz, Capt & P. M.
C. J. Gray, Comm'r
J. R. Stevenson, Surg
Board of Enrollment,
1st Dist. of N. J.

NARA1588

(No. 40.)

SUBSTITUTE

VOLUNTEER ENLISTMENT.

STATE OF New Jersey

TOWNship OF U. A. Creek. Salem Co.

I, Alexander Miller, (Col^d) born in the State of Maryland, aged 22 years, and by occupation a Cook Do hereby acknowledge to have agreed with George W. Pearce (Col^d), Esq., of U. A. Creek Tp. 28 Salem Co. N. J. to become his **SUBSTITUTE** in the Military Service, for a sufficient consideration paid and delivered to me, on the 30th day of May, 1864; and having thus agreed with said George W. Pearce, I do hereby acknowledge to have enlisted this 30th day of May, 1864 to serve as a ***Soldier*** in the **Army of the United States of America,** for the period of *THREE YEARS*, unless sooner discharged by proper authority: I do also agree to accept such bounty, pay, rations, and clothing, as are, or may be, established by law for soldiers. And I do solemnly swear that I will bear true and faithful allegiance to the ***United States of America;*** that I will serve them honestly and faithfully against all their enemies or opposers whomsoever; and that I will observe and obey the orders of the President of the United States, and the orders of the Officers appointed over me, according to the Rules and Articles of War.

Sworn and subscribed to, at Camden N. J.
this 30 day of May 1864
Before Alex. Wentz
Capt & Prov. Mar. 1st Dist. N. J.

Alex. his X mark Miller

We certify, on honor, That we have carefully examined the above-named Volunteer Substitute agreeably to the Regulations, and that, in our opinion, he is free from all bodily defects and mental infirmity which would in any way disqualify him from performing the duties of a soldier; that he was entirely sober when enlisted; that he is of lawful age, (not under 18 years;) and that, in accepting him as duly qualified to perform the duties of an able-bodied soldier, and as a Substitute in lieu of George W. Pearce, drafted in U. A. Creek Tp. Salem Co. N. J. May 5, 1864 we have strictly observed the Regulations which govern in such cases. This soldier has Black eyes, Black hair, Colored complexion; is 5 feet 8 inches high.

Alex. Wentz Capt &
Provost Marshal.

P. Gray
Commissioner of Board.

Geo. R. Stevenson
Surgeon of Board.

Board of Enrollment of 1st *Dist. of* N. J.

177

Miller, Charles H.

Co. 3 U.S. Col'd Inf.

Field & Staff

Private Hosp. Steward

CARD NUMBERS.

1	625-1393	26	
2	625-2127	27	
3	625-2137	28	
4	625-2151	29	
5	625-2163	30	
6	625-2176	31	
7	625-2190	32	
8	625-2203	33	
9	625-2217	34	
10	625-2230	35	
11	625-2242	36	
12	625-2254	37	
13	625-2266	38	
14	625-2280	39	
15	625-2292	40	
16	31372368	41	
17	40756978	42	
18		43	
19		44	
20		45	
21		46	
22		47	
23		48	
24		49	
25		50	

Book Mark:

See also

P.O. M&M. W.O. 1087402 - 6-16-17 - EK.

NARA1591

M | 3 | **U.S.C.T.**

Chas N. Miller

Pvt, Co. ..., 3 Reg't U. S. Col'd Infantry.

Age 29 years.

Appears on an

Individual Muster-in Roll

of the organization named above. Roll dated

Moris Island, S.C., Aug 31, 1863.

Muster-in to date Aug 13, 1863.

Joined for duty and enrolled:

When Aug 13, 1863.

Where Phila. Pa.

Period 3 years.

Remarks: + Mus. in to take
frm 13 Aug 13
1863 date of
enrolment +

x inadvertently omitted

Book mark:

(336)

Leary
Copyist.

M. | 3d Regt | U.S.C.T.

Charles T. Miller

Rank Hosp Steward 3 Reg't U. S. Col'd Infantry.

Appears on

Field and Staff Muster Roll

for Aug 31, 1863.

Present or absent Present.

Stoppage, $ 100 for

Due Gov't, $ 100 for

Valuation of horse, $ 100

Valuation of horse equipments, $ 100

Remarks: Promoted Hosp-Steward Aug 1 3

Book mark:

F. C. Dickerson.

(357)

Copyist

M. | 3d Regt | U.S.C.T.

Charles N. Miller.

Rank Hosp Steward, 3 Reg't U. S. Col'd Infantry.

Appears on

Field and Staff Muster Roll

for Sept. & Oct., 1863.

Present or absent Present.

Stoppage, $.....100 for.....

.....

Due Gov't, $.....100 for.....

.....

Valuation of horse, $.....100

Valuation of horse equipments, $.....100

Remarks:.....

.....

.....

.....

.....

.....

.....

.....

.....

Book mark:.....

F. C. Dickerson,

(357) Copyist

M. 3d Regt U.S.C.T.

Charles F. Miller.

Rank Hosp Steward 3 Reg't U. S. Col'd Infantry.

Appears on

Field and Staff Muster Roll

for Nov. & Dec., 1863.

Present or absent Present.

Stoppage, $.....100 for.....

.....

Due Gov't, $.....100 for.....

.....

Valuation of horse, $.....100

Valuation of horse equipments, $.....100

Remarks:.....

.....

.....

.....

.....

.....

.....

.....

.....

Book mark:.....

F. C. Dickerson,

Copyist

(357)

M. | 3d Regt. | **U.S.C.T.**

Charles N. Mills.

Rank Hos Steward, 3 Reg't U. S. Col'd Infantry.

Appears on

Field and Staff Muster Roll

for Jan & Feb, 1864.

Present or absent Present.

Stoppage, $ 100 for

Due Gov't, $ 100 for

Valuation of horse, $ 100

Valuation of horse equipments, $ 100

Remarks:

Book mark:

F. C. Dickerson.

(357) Copyist

M. | 3d Regt | U.S.C.T.

Charles N. Miller.

Rank Hosp Steward 3 Reg't U. S. Col'd Infantry.

Appears on

Field and Staff Muster Roll

for March & April, 1864.

Present or absent Present

Stoppage, $.....100 for.....

Due Gov't, $.....100 for.....

Valuation of horse, $.....100

Valuation of horse equipments, $.....100

Remarks:.....

Book mark:.....

F. C. Dickerson.

(357) Copyist

M. | 3d Regt. | U.S.C.T.

Charles N. Miller.

Rank Sd Steward, 3 Reg't U. S. Col'd Infantry.

Appears on

Field and Staff Muster Roll

for May & June, 1864

Present or absent Absent.

Stoppage, $ 100 for

Due Gov't, $ 100 for

Valuation of horse, $ 100

Valuation of horse equipments, $ 100

Remarks: Sick in Gen Hospital. Jacksonville Fla.

Book mark:

F. C. Dickerson.

(357) Copyist

M. | 3d Regt. | U.S.C.T.

Charles N. Miller

Rank Hosp Std, 3 Reg't U. S. Col'd Infantry.

Appears on

Field and Staff Muster Roll

for July & Aug, 1864.

Present or absent Present.

Stoppage, $ 100 for

Due Gov't, $ 100 for

Valuation of horse, $ 100

Valuation of horse equipments, $ 100

Remarks: Appointed Aug 13-1863. Title on or before Apr. 19-1861.

Book mark:

F. C. Dickerson.

(357) Copyist.

NARA1599

M | 3 | U.S.C.T.

Chas. N. Miller

Hosp Stew'd Co. , 3 Reg't U.S.C.T.

Appears on

Hospital Muster Roll

of U. S. A. General Hospital,

at Jacksonville, Fla.,

for July & Aug, 1864.

Attached to hospital:

When Apr 30, 1864.

How employed Patient

Last paid by Maj

to , 186 .

Bounty paid $ 100; due $ 100

Present or absent

Remarks: Returned to duty July 14/64

Book mark:

D.M. Campbell

(848) Copyist.

M. | 3d Regt. | U.S.C.T.

Chas. R. Miller.

Rank Hosp Steward, 3 Reg't U. S. Col'd Infantry.

Appears on

Field and Staff Muster Roll

for Sept. & Oct., 1864.

Present or absent Present.

Stoppage, $ 100 for

Due Gov't, $ 100 for

Valuation of horse, $ 100

Valuation of horse equipments, $ 100

Remarks: Paid 7 dollars per month to Dec 31st. 1863. Back pay due. Free on or before Apr. 19-1861. Appt Aug 13-1863.

Book mark:

F. C. Dickerson.

(357) Copyist.

M. | 3d Regt | U.S.C.T.

Chas H Miller,

Rank Sergt Stewd 3 Reg't U. S. Col'd Infantry.

Appears on

Field and Staff Muster Roll

for Nov. & Dec., 1864.

Present or absent Present.

Stoppage, $ 100 for

Due Gov't, $ 100 for

Valuation of horse, $ 100

Valuation of horse equipments, $ 100

Remarks: Paid 7 dollars per month to April 30-1864. Back pay due. Free on or before April 19-1861. Appointed Aug 13th 1863.

Book mark:

F. C. Dickerson,

Copyist

(357)

M | 3d Regt | U.S.C.T.

Chas N. Miller

Rank Hosp Stew, 3 Reg't U. S. Col'd Infantry.

Appears on

Field and Staff Muster Roll

for Jan. & Feb., 1864.

Present or absent Present

Stoppage, $ 100 for

Due Gov't, $ 100 for

Valuation of horse, $ 100

Valuation of horse equipments, $ 100

Remarks: Paid 7 dollars per month to Apr. 30th 1864. Back pay due, Free on or before Apr. 19th 1861 Appointed Aug. 13th, 1863.

Book mark:

F. C. Dickerson.

(357)

Copyist

M. | 3d Regt. | U.S.C.T.

Charles N. Miller.

Rank Hosp Steward, 3 Reg't U. S. Col'd Infantry.

Appears on

Field and Staff Muster Roll

for March & April, 1865.

Present or absent Present

Stoppage, $ 100 for

Due Gov't, $ 100 for

Valuation of horse, $ 100

Valuation of horse equipments, $ 100

Remarks: Pd. $7.00 per month to Apr 30-64. Back pay due. Free on or before Apr. 19. 61. Appointed Aug. 13-1863

Book mark:

F. C. Dickerson.

(357) Copyist

M. | 3d Regt | U.S.C.T.

Charles R. Miller,

Rank Hos Steward, 3 Reg't U. S. Col'd Infantry.

Appears on

Field and Staff Muster Roll

for May & June, 1865.

Present or absent Absent.

Stoppage, $.....100 for.....

Due Gov't, $.....100 for.....

Valuation of horse, $.....100

Valuation of horse equipments, $.....100

Remarks: On duty at Tallahassee. S.O. No. 94 D.F. May 20-65. Paid $7 00 per month to Apr 30th/64. Back pay due. Free on or before Apr. 19th 1861. appld. March 1st 1864.

Book mark:

F. C. Dickerson.

(357) Copyist

M. | 3d Regt | U.S.C.T.

Charles N. Miller,

Rank Hosp Steward, 3 Reg't U. S. Col'd Infantry.

Appears on

Field and Staff Muster Roll

for July & Aug, 1865.

Present or absent Present

Stoppage, $ 100 for

Due Gov't, $ 100 for

Valuation of horse, $ 100

Valuation of horse equipments, $ 100

Remarks:

Book mark:

F. C. Dickerson,

(357) Copyist.

M | 3 | U.S.C.T.

Charles R. Miller

Hospital Steward, Co. ....., 3 Reg't U. S. Colored Inf.

Appears on **Returns** as follows:

June 1864 - Absent sick since Mch. 1. '64.

Sept. 1865 - Absent on duty in Post Hospital at Jacksonville, since Sept. 13. '65.

Book mark:

O. T. Taylor

(546) Copyist.

M. | 3d Regt. | U.S.C.T.

Charles N. Miller

Rank Hosp Steward, 3 Reg't U. S. Col'd Inf.

Appears on

Field and Staff Muster-out Roll

of the organization named above. Roll dated Jacksonville Fla., Oct 31, 1865.

Muster-out to date Oct 31, 1865.

Last paid to June 30, 1865.

Clothing account:

Last settled ....., 186 ; drawn since $ 100

Due soldier $ ..... 100 ; due U. S. $ 100

Am't for cloth'g in kind or money adv'd $ 100

Due U. S. for arms, equipments, &c., $ 100

Bounty paid $ ..... 100 ; due $ 100

Remarks: Joined as Hospital Steward Aug. 13/63.

Book mark:

F. C. Dickerson,
Copyist.

(360)

NARA1608

Charles N. Miller

Co. , 3 Reg't U.S.C.I.

Inclosures.

Bed Cards	Final Statements
Burial Records	Furloughs or L. of A.
Certs. of Dis. for Discharge	Med. Certificates
C. M. Charges	Med. Des. Lists
Descriptive Lists	Orders
Discharge Certificates	Pris. of War Record
Enlistment Papers	Resignations

Other papers relating to—

Admission to Hosp'l	Furlough or L. of A.
Casualty Sheet	Med. Examination
Confinement	Misc. Information
Contracts	Pay or Clothing
Death or Effects	Personal Reports
Desertion	Rank
Discharge from Hosp'l	Transfer to Hosp'l
Discharge from Service	Transfer to V. R. C.
Duty	Transportation
S.S. Ref. Slip 1	

NARA1683

MICROFILM PUBLICATION M 1845

COMPILED MILITARY SERVICE RECORDS
OF VOLUNTEER UNION SOLDIERS WHO SERVED WITH
THE UNITED STATES COLORED TROOPS (USCT)
THIRD INFANTRY

PERSONAL PAPERS' TARGET SHEET

PLEASE NOTE THE CHECKED INFORMATION ABOUT THE PERSONAL PAPERS IN THIS FILE:

☐ NO PERSONAL PAPERS WERE FOUND IN THIS FILE WHEN THE RECORDS WERE ARRANGED FOR MICROFILMING.

☒ __/__PERSONAL PAPER(S) FOUND IN THIS FILE WHEN THE RECORDS WERE ARRANGED FOR MICROFILMING.

NARA1616

Statement of Service Reference Slip.

Office Pension

Claim No. W.O. 1087902

Charles H. Miller
(Name.)

, Co. , 3 Reg't U.S.C.T.

Arch. Div.

For soldier's conjugal condition, and name and address & relationship of person named as nearest of kin.

Johnson
per EB

VRRSee.

No record found bearing upon call.
Harley
Ullmer

12 05

~~Rolls Div. then to~~

To Med. Div. 6 - 18, 1917

For O med. record.

No med. p.p.
Johnson
per EB 7.

Statement furnished 6 - 19, 1917

D.G.S.

Form No. 447—A. G. O
Ed. Apr. 30-17—10,000.

A

med. stmt. made.
3 cards retd.

Miller, Christopher

Co. S, 3 U.S. Col'd Inf.

Private Private

CARD NUMBERS.

1	62517704	26	
2	62662786	27	
3	62662476	28	
4	62629961	29	
5	9061497	30	
6	43150833	31	
7		32	
8		33	
9		34	
10		35	
11		36	
12		37	
13		38	
14		39	
15		40	
16		41	
17		42	
18		43	
19		44	
20		45	
21		46	
22		47	
23		48	
24		49	
25		50	

Book Mark:

See also

NARA1613

S 1974693 Damon

alls 2271850

S - Ohio Sol. Home 9/9/31 - ARS

55 Sol H Ohio 9/20 Jun 31

D. Mts. Holstone 2/5/32

M. | 3 | U.S.C.T.

Christopher Miller

....., Co. D, 3 Reg't U. S. Col'd Inf.

Appears on

Company Descriptive Book

of the organization named above.

DESCRIPTION.

Age 18 years; height 5 feet 1½ inches.

Complexion Col'd

Eyes Brown; hair Blk.

Where born Connecticut

Occupation Farmer

ENLISTMENT.

When Jan. 24, 1865.

Where Harrisburg

By whom Capt. Patterson; term 1 y'rs.

Remarks:

Daggett

(383g) Copyist.

M | 3 | U.S.C.T.
Cold

Christopher Miller

Appears with rank of Pvt on

Muster and Descriptive Roll

of Detachment of U. S. Substitutes Col'd.

forwarded. Roll dated Harrisburg Pa, Jan. 24, 1865.

Where born Connecticut

Age 18 years; occupation Farmer

When enlisted Jan. 24, 1865.

Where enlisted Harrisburg, Pa

For what period enlisted 1 years.

Eyes Brown; hair Curly

Complexion Col'd; height 5 ft. 1½ in.

When mustered in Jan. 24, 1865.

Where mustered in Harrisburg

Bounty paid $ none 100; due $ 100

Clothing account:

Last settled Jan 24, 1865; drawn since $ 30 50/100

Date of first muster, 186 .

Company to which assigned

Remarks: Sub for John Thomas drafted in 4th Wd Harrisburg Pa. 6th Dist 14th Con Dist Pay dates from enlistment

Book mark:

R. W. Fish
Copyist.

(356m)

M | 3 | U.S.C.T.

Christopher Miller

Appears with rank of Pvt on

Muster in and Descriptive Roll of a Detachment of Substitutes forwarded

for the 3 Reg't U. S. Col'd Inf. Roll dated Chestnut Hills on Camp Wm Penn, Feb 10, 1863.

Where born Conn

Age 18 y'rs; occupation Farmer

When enlisted ....., 186 .

Where enlisted .....

For what period enlisted one years.

Eyes Brown; hair Blk

Complexion Col'd; height 5 ft. 1½ in.

When mustered in Jan 24, 1865.

Where mustered in Harrisburg

Bounty paid $ ..... 100; due $ 100

Where credited .....

Company to which assigned .....

Remarks: Substitute for John Thomas, 4th Harrisburg, 14 Cong Dist: 6 Sub Dist- Pa

Book mark: .....

Sands

(339) Copyist

M. | 3 | U.S.C.T.

Christopher Miller

Pvt., Co. I, 3 Reg't U. S. Col'd Infantry.

Appears on

Company Muster Roll

for Mar. & Apr., 1865.

Present or absent Present.

Stoppage, $ 100 for

Due Gov't, $ 100 for

Remarks:

Book mark:

H. G. White.

(858) Copyist

NARA1618

M. | 3 | U.S.C.T.

Christopher Miller

Pt., Co. I, 3 Reg't U. S. Col'd Infantry.

Appears on

Company Muster Roll

for May & June, 1865.

Present or absent Present.

Stoppage, $ 100 for

Due Gov't, $ 100 for

Remarks:

NEXT ROLL ON FILE MUSTER OUT.

Book mark:

N. F. White.

(858) *Copyist*

M. | 3 | U.S.C.T.

Christopher Miller

Pvt., Co. I, 3 Reg't U. S. Col'd Infantry.

Appears on **Co. Muster-out Roll**, dated

Jacksonville Fla Oct. 31, 1865.

Muster-out to date Oct. 31, 1865.

Last paid to June 30, 1865.

Clothing account:

Last settled ...., 186 ; drawn since $......... 100

Due soldier $ 10 90/100; due U. S. $......... 100

Am't for cloth'g in kind or money adv'd $......... 100

Due U. S. for arms, equipments, &c., $......... 100

Bounty paid $......... 100; due $......... 100

Remarks: Joined as Private.

Book mark: 1628. P.M.G. Mar. 17. 66

N. J. White
Copyist.

(361)

Miller, Christopher

....., Co. ....., 3 Reg't US Cav

2 Enclosures.

Bed Cards	Final Statements
Burial Records	Furloughs or L. of A.
Certs. of Dis. for Discharge	Med. Certificates
C. M. Charges	Med. Des. Lists
Descriptive Lists	Orders
Discharge Certificates	Pris. of War Record
Enlistment Papers 2	Resignations

Other papers relating to—

Admission to Hosp'l	Furlough or L. of A.
Casualty Sheet	Med. Examination
Confinement	Misc. Information
Contracts	Pay or Clothing
Death or Effects	Personal Reports
Desertion	Rank
Discharge from Hosp'l	Transfer to Hosp'l
Discharge from Service	Transfer to V. R. C.
Duty	Transportation

DECLARATION OF SUBSTITUTE.

I, Christopher Miller, desiring to ENLIST in the Army of the United States, for ~~THREE~~ one YEAR~~S~~, *Do declare*, That I am Eighteen years and Eight months of age; that I have never been discharged from the United States service on account of disability or by sentence of a court martial; and I know of no impediment to my serving honestly and faithfully as a soldier for ~~three~~ one year~~s~~.

GIVEN at Harrisburg Penna
the 24th day of January 1865

WITNESS:
Wm A Middleton

Christopher his X mark Miller

No. Cold.

Christopher Miller
Enlisted at Harrisburg
As Substitute for
John Shenas
On the 24th day of January, 1865,
By [illegible] Patterson
[illegible]
[illegible]
Board of Enrollment,
14th Dist. of Penna.

Dec 1896 This paper was formerly filed in ... W. D. R. & P. O.

Substitute not entitled to [illegible] Bounty

Enlisted as of [illegible] to a Recruit to 4th [illegible] Harrisburg Dauphin County 14th Dist [illegible] Penna

Due proof under oath has been given to the Board of Enrollment that the within named Substitute is under age that he is not Enrolled nor Liable to draft

NARA1622

(No. 39.)

SUBSTITUTE

VOLUNTEER ENLISTMENT.

STATE OF Pennsylvania — TOWN OF Harrisburg

I, Christopher Miller, born in the State of Connecticut, aged Eighteen years, and by occupation a Farmer, Do HEREBY ACKNOWLEDGE to have agreed with John Thomas, Esq., of 4th Ward Harrisburg Dauphin County 14th Dist Penna to become his **SUBSTITUTE** in the Military Service, for a sufficient consideration paid and delivered to me, on the Twenty Fourth day of January, 1865; and having thus agreed with said John Thomas, I DO HEREBY ACKNOWLEDGE to have enlisted this Twenty Fourth day of January, 1865, to serve as a ***Soldier*** in the **Army of the United States of America,** for the period of ~~*THREE*~~ one *YEARS*, unless sooner discharged by proper authority. I do also agree to accept such bounty, pay, rations, and clothing as are, or may be, established by law for soldiers. And I do solemnly swear that I will bear true and faithful allegiance to the ***United States of America;*** that I will serve them honestly and faithfully against all their enemies or opposers whomsoever; and that I will observe and obey the orders of the President of the United States and the orders of the officers appointed over me, according to the Rules and Articles of War.

SWORN and subscribed to, at Harrisburg
this 24th of January 1865,
BEFORE W H Patterson
Capt & Pro Mar 14th Dist Penna

Christopher his X mark Miller

We certify, on honor, That we have carefully examined the above-named Volunteer Substitute agreeably to the Regulations, and that, in our opinion, he is free from all bodily defects and mental infirmity which would in any way disqualify him from performing the duties of a soldier; that he was entirely sober when enlisted; that he is of lawful age, (not under 18 years;) and that, in accepting him as duly qualified to perform the duties of an able-bodied soldier, and as a Substitute in lieu of John Thomas, drafted in 4th Ward Harrisburg Dauphin County 14th Dist Pa, 1865, we have strictly observed the Regulations which govern in such cases. This soldier has Brown eyes, Curly hair, Colored complexion; is Five feet One & half inches high.

No marks

W H Patterson
Provost Marshal.

Charles Hower
Commissioner of Board.

P. R. Waggenseller
Surgeon of Board.

Board of Enrollment of 14th *Dist. of* Penna

NARA 1623

DECLARATION OF SUBSTITUTE.

I, Christopher Miller, desiring to ENLIST in the Army of the United States, for ~~THREE~~ one YEAR~~S~~, ***Do declare,*** That I am Eighteen years and Eight months of age; that I have never been discharged from the United States service on account of disability or by sentence of a court martial; and I know of no impediment to my serving honestly and faithfully as a soldier for ~~three~~ one year~~s~~.

GIVEN at Harrisburg Pa.
the 24th day of January 1865

WITNESS:
Wm H. Middleton

his
Christopher X Miller
Mark

Christopher Miller
No. ____

Enlisted at Harrisburg Pa.

As Substitute for
John Thomas

On the 24th day of January, 1865,

By order of Board of Enrollment,

Board of Enrollment,

Dist. of ____

Certified as a true copy of record in my office.
Harrisburg Dauphin Co. Pa.
Cont. 14th day of March

Subscribed, Mr Cullough

Due proof under oath has been given to the Board of Enrollement that the within named substitute is under age that he is not Enrolled nor liable to draft.

(No. 39.)

SUBSTITUTE

VOLUNTEER ENLISTMENT.

STATE OF Pennsylvania TOWN OF Harrisburg

I, Christopher Miller, born in the State of Connecticut, aged Eighteen years, and by occupation a Farmer, DO HEREBY ACKNOWLEDGE to have agreed with John Thomas, Esq., of 4th Ward Harrisburg Dauphin County 14th Dist Penna to become his **SUBSTITUTE** in the Military Service, for a sufficient consideration paid and delivered to me, on the Twenty Fourth day of [illegible], 1865; and having thus agreed with said John Thomas, I DO HEREBY ACKNOWLEDGE to have enlisted this Twenty Fourth day of [illegible], 1865, to serve as a ***Soldier*** in the **Army of the United States of America,** for the period of ~~THREE~~ ONE YEAR, unless sooner discharged by proper authority. I do also agree to accept such bounty, pay, rations, and clothing as are, or may be, established by law for soldiers. And I do solemnly swear that I will bear true and faithful allegiance to the ***United States of America;*** that I will serve them honestly and faithfully against all their enemies or opposers whomsoever; and that I will observe and obey the orders of the President of the United States and the orders of the officers appointed over me, according to the Rules and Articles of War.

SWORN and subscribed to, at [illegible]
this 24th of [illegible], 186 ,
BEFORE [illegible]

his Christopher X Miller
Mark

We certify, on honor, That we have carefully examined the above-named Volunteer Substitute agreeably to the Regulations, and that, in our opinion, he is free from all bodily defects and mental infirmity which would in any way disqualify him from performing the duties of a soldier; that he was entirely sober when enlisted; that he is of lawful age, (not under 18 years;) and that, in accepting him as duly qualified to perform the duties of an able-bodied soldier, and as a Substitute in lieu of John Thomas, drafted in 4th Ward Harrisburg Dauphin County 14 Dist Pa, 1865, we have strictly observed the Regulations which govern in such cases. This soldier has Brown eyes, Curly hair, Colored complexion; is Five feet One & half inches high.

no marks

Provost Marshal.

Charles Bower
Commissioner of Board.

D R Wagenseller
Surgeon of Board.

Board of Enrollment of 14th *Dist. of* [illegible]

Miller, George H.

Co. E, 3 U.S. Col'd Inf.

CARD NUMBERS.

1 625-7122	26
2 625-7276	27
3 625-F3F9	28
4 9060997	29
5	30
6	31
7	32
8	33
9	34
10	35
11	36
12	37
13	38
14	39
15	40
16	41
17	42
18	43
19	44
20	45
21	46
22	47
23	48
24	49
25	50

Book Mark:

See also

NARA1626

S 1777090 Dorman

Rol 53-6336

S, 1885246 P.O. Retd

R&P. 624645.

No. | 3 | U.S.C.T.

George H. Miller,

, Co. Z, 3 Reg't U. S. Col'd Inf.

Appears on

Company Descriptive Book

of the organization named above.

DESCRIPTION.

Age 14 years; height — feet — inches.

Complexion Black.

Eyes Black; hair Black.

Where born —

Occupation —

ENLISTMENT.

When July 7th, 1863.

Where Philad.a Penn.a

By whom Col. Wagner; term 3 y'rs.

Remarks: Deserter.
Never Known in Camp.

(383y) Copyist.

M | 3 | U.S.C.T.

George H. Miller

....., Co. E, 3 Reg't U. S. Col'd Infantry.

Age 14 years.

Appears on

Company Muster-in Roll

of the organization named above. Roll dated

Phila Pa, Aug 1, 1863.

Muster-in to date July 7, 1863

Joined for duty and enrolled:

When July 7, 1863.

Where Phila Pa

Period 3 years.

Remarks:

Book mark:

S. O. York

(856) Copyist.

NARA1629

M. | 3 | U.S.C.T.

George H. Miller

Musician, Co. E, 3 Reg't U. S. Col'd Infantry.

Appears on

Company Muster Roll

for Aug. 1 to 31, 1863.

Present or absent

Stoppage, $ ---- 100 for

Due Gov't, $ ---- 100 for

Remarks: Deserted from Camp Wm Penn. date not noted on morning report prior to August 13th 1863.

Muster out next roll on which name is borne.

Book mark:

Daggett
Copyist

(358)

M | 3 | **U.S.C.T.**

Geo. N. Miller +

....., Co. E, 3 Reg't U. S. Col'd Infantry.

Appears on **Co. Muster-out Roll,** dated

Jacksonville Fla, Oct 31, 186 5.

Muster-out to date ....., 186 .

Last paid to ....., 186 .

Clothing account:

Last settled....., 186 ; drawn since $.....100

Due soldier $.....100; due U. S. $.....100

Am't for cloth'g in kind or money adv'd $.....100

Due U. S. for arms, equipments, &c., $ 100

Bounty paid $.....100; due $.....100

Remarks: A.G.O.

Roll for August 1863.

+ Entire entry in Red.

Book mark:

(861) Joseph Stewart

Copyist.

NARA1631

802

Miller, Henry

Co A, 3 U.S. Col'd Inf.

Private Private

CARD NUMBERS.

1	625-1634	26	
2	623-1706	27	
3	626274-5-	28	
4	626274-5-	29	
5	626296 0	30	
6	9061488	31	
7		32	
8		33	
9		34	
10		35	
11		36	
12		37	
13		38	
14		39	
15		40	
16		41	
17		42	
18		43	
19		44	
20		45	
21		46	
22		47	
23		48	
24		49	
25		50	

Book Mark:

See also

M. | 3 | U.S.C.T.

Henry Miller

, Co. I, 3 Reg't U. S. Col'd Inf.

Appears on

Company Descriptive Book

of the organization named above.

DESCRIPTION.

Age 18 years; height 5 feet 9 inches.

Complexion Brown

Eyes Blk; hair Blk

Where born Virginia

Occupation Labrer

ENLISTMENT.

When Jan. 20, 1865.

Where Hollidaysburg Pa.

By whom Capt. Lloyd; term 3 y'rs.

Remarks: Substitute.

Daggett

(383y) Copyist.

M | 3 | U.S.C.T.

Henry Miller

Appears with rank of Pvt on

Muster and Descriptive Roll of a Detachment of Substitutes forwarded

for the 3 Reg't U. S. Col'd Inf. Roll dated

Hollidaysburg Pa Jany 20, 1863.

Where born Va

Age 18 y'rs; occupation Laborer

When enlisted Jany 20, 1863.

Where enlisted Hollidaysburg

For what period enlisted 3 years.

Eyes Black; hair Black

Complexion Brown; height 5 ft. 9 in.

When mustered in Jany 30, 186 .

Where mustered in Holliday'sburg

Bounty paid $ 100; due $ 100

Where credited

Company to which assigned

Remarks: Sub. for J C Fisher 10th Sub. Dist. 17th Cong Dist. Huntingdon Hunt Co Pa

Book mark:

Smith

(339) Copyist

M | 3 | **U.S.C.T.**

Henry Miller

Appears with rank of Pvt on

Muster in and Descriptive Roll of a Detachment of Substitutes forwarded

for the 3 Reg't U. S. Col'd Inf. Roll dated Chestnut Hills Pa Camp Wm Penn Feb 10, 1865.

Where born Va

Age 18 y'rs; occupation Laborer

When enlisted ....., 186 .

Where enlisted .....

For what period enlisted 3 years.

Eyes Blk; hair Blk

Complexion Brown; height 5 ft. 9 in.

When mustered in June 20, 1865.

Where mustered in Hollidaysburg

Bounty paid $ 100; due $ 100

Where credited .....

Company to which assigned .....

Remarks: Substitute for F. C. Fisher 17 Cong dist, 11 Sub dist, Pa

Book mark: .....

Davis

(339) Copyist

M. | 3 | U.S.C.T.

Henry Miller

Pt., Co. I, 3 Reg't U. S. Col'd Infantry.

Appears on

Company Muster Roll

for Mar. & Apr., 1865.

Present or absent Present.

Stoppage, $ 100 for

Due Gov't, $ 100 for

Remarks:

Book mark:

H. G. White.

(858) *Copyist*

NARA1636

M. | 3 | U.S.C.T.

Henry Miller

Pt., Co. I, 3 Reg't U. S. Col'd Infantry.

Appears on

Company Muster Roll

for May & June, 1865.

Present or absent Present.

Stoppage, $ 100 for

Due Gov't, $ 100 for

Remarks:

NEXT ROLL ON FILE MUSTER OUT.

Book mark:

N. F. White.
Copyist

(858)

M. | 3 | U.S.C.T.

Henry Miller

Pvt., Co. G, 3 Reg't U. S. Col'd Infantry.

Appears on **Co. Muster-out Roll,** dated Jacksonville, Fla, Oct. 31, 1865.

Muster-out to date Oct. 31, 1865.

Last paid to June 30, 1865.

Clothing account:

Last settled ....., 186 ; drawn since $ 100

Due soldier $ 19 10/100; due U. S. $ 100

Am't for cloth'g in kind or money adv'd $ 100

Due U. S. for arms, equipments, &c., $ 100

Bounty paid $ ..... 100; due $ 100

Remarks: Joined as Private.

Book mark: V. 183. P. 198. 74.

J. L. White.

(361) *Copyist.*

MICROCOPY

ROLL

IMAGE EVALUATION
TEST TARGET (QA-3)

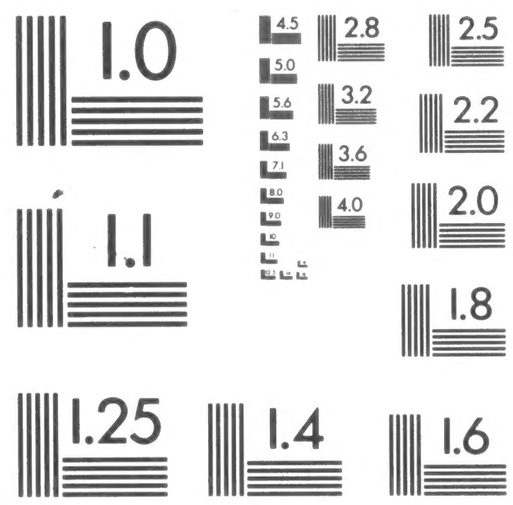

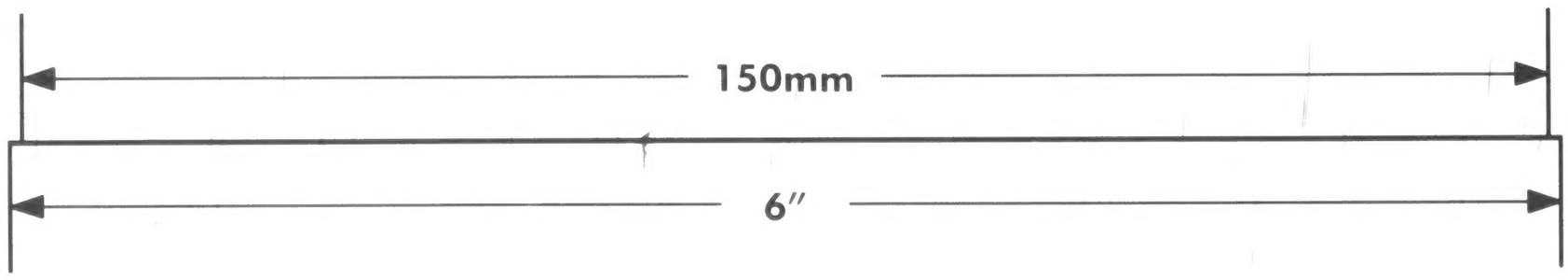

APPLIED IMAGE, Inc
1653 East Main Street
Rochester, NY 14609 USA
Phone: 716/482-0300
Fax: 716/288-5989

© 1993, Applied Image, Inc., All Rights Reserved

THE END

PLEASE

REWIND

M1820-23