NATIONAL ARCHIVES MICROFILM PUBLICATIONS

IMAGE EVALUATION
TEST TARGET (QA–3)

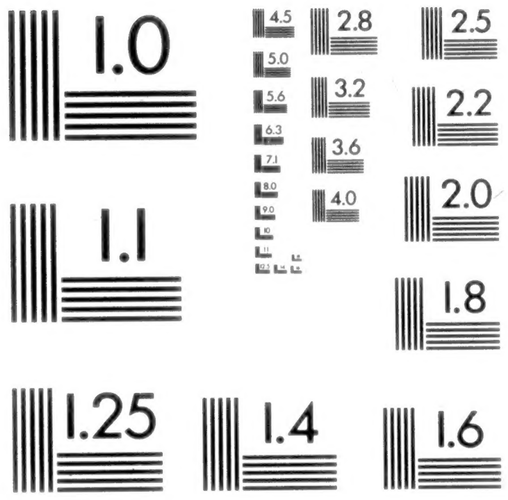

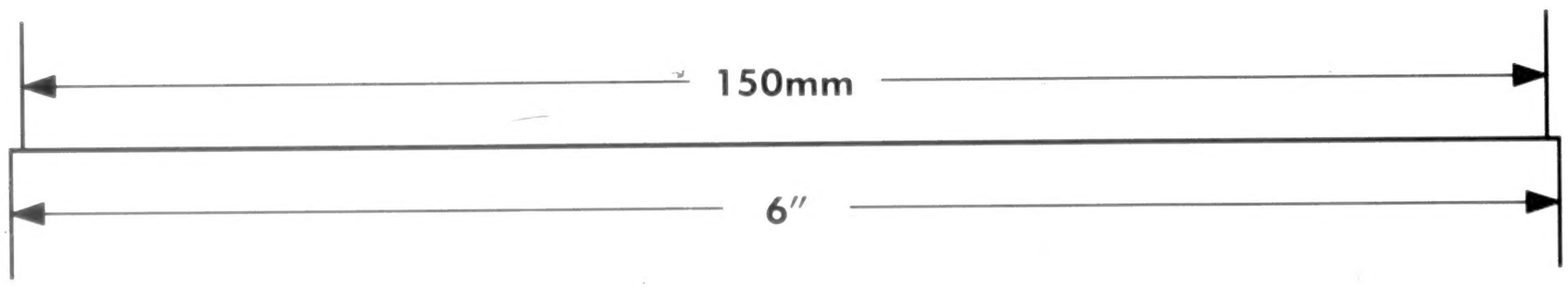

APPLIED IMAGE, Inc
1653 East Main Street
Rochester, NY 14609 USA
Phone: 716/482-0300
Fax: 716/288-5989

© 1993, Applied Image, Inc., All Rights Reserved

National Archives at College Park
8601 Adelphi Road College Park, Maryland 20740-6001

Sieh Loreta 2-1

OPERATOR CAMERA

14, Aug. 1998 10-14

DATE FILMED REDUCTION RATIO

2461-0576-014-02 Kodak

FILM EMULSION NUMBER

M1818 196

PROJECT NUMBER ROLL NUMBER

MICROCOPY

1818

ROLL

196

M1818

COMPILED MILITARY SERVICE RECORDS OF VOLUNTEER UNION SOLDIERS WHO SERVED WITH THE UNITED STATES COLORED TROOPS:
Artillery Organizations

Introduction by Budge Weidman, Project Manager

Records prepared for microfilming by members of
the Civil War Conservation Corps

Pat Alfredson
Phyllis Altrogge
Kenneth Ashton
Sue Barnard*
Dee Benson
Ann N. Brown
Robert Budway
Randy Caldwell
MaryAnn Castellana*
Mary Lou Cole
Giovanni Croce
B.H. Custer
Bob Denney
Richard Dow
Earl Dunn
Yvette Fallin
Maria Flesher
Naomi Glass
Sue Goward*
Bert Greenstein
Anne Greenwood
Jim Harris
Walter Hayden
Mary Hayden
Pat Ikonen
Dick Ives
Sarah Jaffe
Barbara Kemp
Bev Manypenny
Frank Masterson
Joe Mazur
Kathleen McCarthy
Sarah McDougall
Catherine McManus
Ben Miles
Dave Murray
Mary Poggioli
Peggy Pratt
Ray Puzio
Sylvia Scott
Lynn Shearouse
Mary Stack-Dunne
Ben Stearns
Bill Stormer*
Pat Sullivan
Gorman Tidball*
Cathy Tinston
John Toole
Maryellen Toole
Milt Weatherhead
Russ Weidman
C. Lois Young
Robert Young

Team leaders are indicated by the asterisk.

National Archives and Records Administration
Washington, DC
1998

INTRODUCTION

On the 299 rolls of this microfilm publication, M1818, are reproduced the compiled military service records of volunteer Union soldiers belonging to the artillery units organized for service with the United States Colored Troops (USCT). The USCT included 7 numbered cavalry regiments; 13 numbered artillery regiments plus one independent battery; 144 numbered infantry regiments; plus Brigade Bands Nos. 1 & 2 (Corps d'Afrique and US Colored Troops); Powell's Regiment Colored Infantry; Southard's Company Colored Infantry; Quartermaster Detachment; Pioneer Corps, 1st Division, 16th Army Corps; Unassigned Company A Colored Infantry; and Unassigned USCT. There are also miscellaneous service cards arranged alphabetically by surname at the end of the unit records. The records reproduced are part of the Records of the Adjutant General's Office, 1780's-1917, Record Group (RG) 94.

Background

United States Colored Troops

Since the time of the American Revolution, African Americans have volunteered to serve their country in time of war. The Civil War was no exception. Official sanction was the difficulty. In the fall of 1862 there were four Union regiments of African Americans raised in New Orleans, LA: the 1st, 2d, and 3d Louisiana Native Guard, and the 1st Louisiana Heavy Artillery (African Descent). The 1st South Carolina Infantry (African Descent) was not officially organized until January 1863; however, three companies of the regiment were on coastal expeditions as early as November 1862. Similarly, the 1st Kansas Colored Infantry was not mustered into Federal service until January 1863, even though the regiment had already participated in the action at Island Mound, MO, on October 27, 1862. These early unofficial regiments received little Federal support, but they showed the strength of the African American soldier's desire to fight for freedom.

The first official authorization to employ African Americans in Federal service was the Second Confiscation and Militia Act of July 17, 1862. This act allowed President Abraham Lincoln to receive into the military or naval service persons of African descent and gave him permission to use them for any purpose "he may judge best for the public welfare." However, the President did not authorize use of African Americans in combat until issuance of the Emancipation Proclamation on January 1, 1863.

In late January 1863, Governor John Andrew of Massachusetts received permission to raise a regiment of African American soldiers. The pace of organizing additional regiments was very slow. In March Secretary of War Edwin M. Stanton sent Gen. Lorenzo Thomas to the lower Mississippi Valley to recruit free and contraband African Americans. Thomas was given broad authority. He was to explain the administration's policy regarding African American soldiers and recruit

volunteers to raise and command them. Stanton wanted all officers of such units to be white, but that policy was softened to allow African American surgeons and chaplains. By the end of the war, in addition to the chaplains and surgeons, there were some 87 African American officers. Thomas's endeavor was very successful, and on May 22, 1863, the Bureau of Colored Troops was established to coordinate and organize regiments from all parts of the country. Created under War Department General Order No. 143, the bureau was responsible for handling "all matters relating to the organization of Colored Troops." The bureau was directly under the Adjutant General's Office and its procedures and rules were specific and strict. All African American regiments were now to be designated United States Colored Troops (USCT). At this time there were some African American regiments with state names and a few regiments in the Department of the Gulf designated as Corps d'Afrique. All these were ultimately assimilated into the USCT, even though some of the regiments, such as the 5th Massachusetts, retained their state designations.

To facilitate recruiting in the states of Maryland, Missouri, Tennessee, and eventually Kentucky, the War Department issued General Order No. 329 on October 3, 1863. Section 6 of the order stated that if any citizen should offer his or her slave for enlistment into the military service, that person would, "if such slave be accepted, receive from the recruiting officer a certificate thereof, and become entitled to compensation for the service or labor of said slave, not exceeding the sum of three hundred dollars, upon filing a valid deed of manumission and of release, and making satisfactory proof of title." For this reason, some records of manumission are contained in the compiled service records reproduced in this publication.

The USCT fought in 39 major engagements and over 400 lesser ones. Sixteen African American soldiers received Medals of Honor. As it was in other units, the death toll from disease was very high in the USCT. Deaths from disease and battle totaled 37,000. The last regiment of the USCT was mustered out of Federal service in December 1867.

Important sources for information about African American units in the Civil War are the War Department's *The War of the Rebellion: A Compilation of the Official Records of the Union and Confederate Armies* (Washington, DC: 1880–1901; reprinted Harrisburg, 1971 and 1985) and the Navy Department's *The War of the Rebellion; A Compilation of the Official Records of the Union and Confederate Navies* (Washington, DC: 1874–1922; reprinted Harrisburg, 1971 and 1985). These multivolume works contain reports of operations and other official correspondence.

U. S. Colored Heavy Artillery

1st Heavy Artillery: This regiment was organized at Knoxville, TN, between February and November 1864. It served in Knoxville, eastern Tennessee, western Virginia, northern Alabama, and western North Carolina. It was mustered out on March 31, 1866.

2d Heavy Artillery: This regiment was changed from the 2d Heavy Artillery to the 3d Heavy Artillery on April 26, 1864, and the compiled military service records appear there.

3d Heavy Artillery: Organized as the 1st Tennessee Heavy Artillery (African descent) at Memphis and Fort Pickering, TN, from June 5 to December 22, 1863, this regiment's designation was changed to the 3d United States Colored Heavy Artillery in April 1864. It served garrison duty at Fort Pickering and in defense of Memphis, TN. The unit mustered out on April 30, 1866.

4th Heavy Artillery: This unit was organized as the 2d Regiment Tennessee Heavy Artillery (African descent) from June 1863 until April 1864. It became the 4th United States Colored Heavy Artillery in April 1864. It served at Fort Halleck; Columbus, KY; and Union City, TN. The regiment had duty near Fort Donelson, TN, and moved to Pine Bluff, AR, where it was mustered out on February 25, 1866.

5th Heavy Artillery: This regiment was organized at Vicksburg, MS, between August 1863 and January 1864, as the 9th Louisiana Volunteers (African descent). Its designation was changed to the 5th Heavy Artillery in April 1864. The unit served garrison duty at Vicksburg, MS, and was mustered out on May 20, 1866.

6th Heavy Artillery: This regiment was organized as the 2d Mississippi Heavy Artillery (African descent) at Natchez, MS, from September 1863 to January 1864. It was changed to the 6th United States Colored Heavy Artillery on April 26, 1864. The unit served at Natchez, Mississippi, and Vidalia, LA. It was mustered out on May 18, 1866.

7th Heavy Artillery: The 7th Heavy Artillery was designated the 11th United States Colored Infantry (New) on January 23, 1865, and the compiled military service records appear there.

8th Heavy Artillery: This regiment was organized at Paducah, KY, from April to October 1864. It served garrison duty at Paducah and was mustered out on February 10, 1866.

9th Heavy Artillery: This regiment consisted of four companies and was organized at Clarksville and Nashville, TN, during October 1864. It was mustered out on May 5, 1865.

10th Heavy Artillery: Organization of this regiment at New Orleans, LA, began in November 1862. First designated the 1st Louisiana Heavy Artillery (African descent) in November 1863, it became the 1st Regiment Corps d'Afrique. In May 1864 the unit became the 10th United States Colored Heavy Artillery. The regiment was on garrison duty at New Orleans during its entire service. It served longer than any other USCT regiment, mustering out on February 22, 1867.

11th Heavy Artillery: This regiment was organized at Providence, RI, from August 1863 through January 1864, as the 14th Rhode Island Colored Heavy Artillery. In May 1864 it became the 11th United States Colored Heavy Artillery. The unit served garrison duty at New Orleans, LA, and was mustered out on October 2, 1865.

12th Heavy Artillery: This regiment was organized at Camp Nelson, KY, from July 1864 through July 1865. It served garrison duty at Camp Nelson, Bowling Green, and other points in the District of Kentucky. It was mustered out on April 24, 1866.

13th Heavy Artillery: This regiment was organized at Camp Nelson, KY, in June 1865, where it served garrison duty. It also served at Smithland and Lexington, KY. It was mustered out on November 18, 1865.

14th Heavy Artillery: This regiment was organized at New Bern and Morehead City, NC, from March 1864 to April 1865, as the 1st North Carolina Colored Heavy Artillery. It became the 14th United States Colored Heavy Artillery in March 1865. The unit served garrison duty at New Bern, NC, and was mustered out on December 11, 1865.

U. S. Colored Light Artillery

The **1st Regiment Light Artillery** was recruited and organized under Maj. Gen. Benjamin F. Butler in December 1863. In February 1864 it was changed to Battery B of the 2d Light Artillery.

The **2d Regiment Light Artillery** consisted of nine batteries, A through I, that were independently organized and deployed.

Battery A was organized at Nashville, TN, in April 1864. The battery served garrison duty at Nashville and participated in the Battle of Nashville December 15–16, 1864. It was mustered out January 13, 1866.

Battery B was organized at Fort Monroe, VA, in January and February 1864. It operated in Virginia and participated in the siege against Petersburg and Richmond. The battery was ordered to Texas in May 1865, and mustered out March 17, 1866.

Battery C was organized at Hebron's Plantation, MS, in November 1863, as the 1st Battery Louisiana Light Artillery (African descent). It was designated Battery C in April 1864. The battery had garrison duty at Goodrich Landing, Vicksburg, and Milliken's Bend. It was mustered out December 28, 1865.

Battery D was organized at Black River Bridge, MS, in December 1863, as the 2d Battery Louisiana Light Artillery (African descent). It was designated Battery D in April 1864. The battery had garrison duty at Goodrich Landing and Vicksburg, MS, and was mustered out on December 28, 1865.

Battery E was organized at Helena, AR, in December 1863, as the 3d Battery Louisiana Light Artillery (African descent). It was designated Battery E in April 1864. The battery had garrison duty at Helena, AR, and was mustered out on September 26, 1865.

Battery F was organized at Memphis, TN, in November 1863, as the Memphis Light Battery. It was designated Battery F in April 1864. The battery had garrison duty at Memphis, TN, until April 1865, when it moved to Bridgeport, AL. It was mustered out on December 28, 1865.

Battery G was organized at Hilton Head, SC, in May 1864 and had garrison duty at Hilton Head for its entire term. The battery was mustered out on August 12, 1865.

Battery H was organized at Pine Bluff, AR, in June 1864, as the 1st Arkansas Colored Battery. It was designated as Battery H in December 1864. The battery had garrison duty at Pine Bluff the entire term and was mustered out on September 14, 1865.

Battery I was organized at Memphis, TN, in April 1864. The battery had garrison duty at Memphis, TN, and operations in Mississippi. It was mustered out on January 10, 1866.

Independent Battery was organized at Leavenworth, KS, in December 1864. It had duty at Fort Leavenworth until it was mustered out on July 22, 1865.

Records Description

Compiled service records consist of a jacket-envelope for each soldier, labeled with his name, rank, unit, and card numbers. The compilation of service records of Union soldiers began in 1890 under the direction of Col. Fred C. Ainsworth, head of the Record and Pension Office of the Adjutant General's Office, Department of War. Information from muster rolls, regimental returns, descriptive books, and other records was copied verbatim onto cards. A separate card was prepared each time an individual name appeared on a document. These cards were numbered on the back, and these numbers were entered onto the outside jacket containing the cards. The carded information was verified by a separated operation of comparison; great care was taken to ensure that the cards were accurate.

A typical jacket contains card abstracts of entries found in original records relating to the soldier and original documents relating solely to that soldier. Examples of the latter include enlistment papers, substitute certificates, casualty sheets, death reports, prisoner-of-war memorandums, and correspondence. Unique to the records of the USCT are deeds of manumission, oaths of allegiance, proof of ownership, certificates of monetary award, and bills of sale. These items appear most frequently in units recruited in the border states of Kentucky, Missouri, and Maryland. These states remained in the Union but were slave states. Jackets and

cards include a section labeled "bookmark" which was reserved for cross-references to other records relating to the individual or his unit. The service records are arranged by arm of service, thereunder numerically by regiment or independent battalion or company, and thereunder alphabetically by name of the soldier. Records for officers are interfiled alphabetically by name with the records of enlisted men. If an individual served in more than one unit, which was typical for USCT officers, there will be a separate service record for each unit in which he served.

The unjacketed miscellaneous cards were accumulated by the War Department with the expectation that they would be incorporated in individual compiled service records. However, the expectation was never fulfilled, because either insufficient or contradictory information made it impossible to associate the cards or papers with a particular soldier's service records.

Related Records

Among the records of the Adjutant General's Office in the National Archives are many of the original records that were abstracted or "carded" by the Record and Pension Office. These include the individual unit's muster rolls, returns and descriptive books. Other series in RG 94 that contain information relating to volunteer Union soldiers who served with the USCT include carded records relating to Union staff officers, carded medical records of volunteer Union soldiers, unbound and bound regimental records and "record of events" cards. The regimental records of the 54th Massachusetts Infantry (Colored) have been reproduced as Microfilm Publication M1659, *Records of the Fifty-fourth Massachusetts Infantry Regiment (Colored), 1863-1865*.

The "record of events" cards include information copied from the unit's muster rolls and returns. They show the stations of the field and staff and those of the various companies of the regiment at the time the muster roll or return was prepared and sometimes mention battles, skirmishes, or other activities in which the regiment participated. The cards have been reproduced as Microfilm Publication M594, *Compiled Records Showing Service of Military Units in Volunteer Union Organizations*.

Record Group 94 also includes a card index for the USCT, reproduced as Microfilm Publication M589, *Index to Compiled Military Service Records of Volunteer Union Soldiers Who Served with U.S. Colored Troops*, which may be used to locate the regiment of USCT personnel. An index card gives the name of the soldier and his rank, as well as the unit in which he served; sometimes there is a cross-reference to his service in other units or organizations. The National Archives is continually producing microfilm publications of volunteer Union compiled military service records. A complete listing of finished publications can be found in the National Archives *Microfilm Resources for Research: A Comprehensive Catalog* which is available online at http://www.nara.gov.

The Records of the Colored Troops Division, within RG 94, include division correspondence and records relating to recruiting, the appointment of officers, and the slave or free status of individuals; and a compilation of historical extracts and official papers concerning the military service of African Americans from the colonial period through the Civil War entitled *The Negro in the Military Service of the United States 1639-1886.* This compilation is reproduced as Microfilm Publication M858. The Records of the Bounty and Claims Division, also in RG 94, include correspondence of the division and records relating to bounties and claims paid to loyal owners of slaves by the Slave Claims Commissions of Delaware, Kentucky, Maryland, Missouri, Tennessee, and West Virginia.

If an application for a pension was made, the pension application case file may be among the Records of the Veterans Administration (RG 15). Indexes to the pension applications have been reproduced as Microfilm Publication T288, *General Index to Pension Files, 1861-1934,* and T289, *Organizational Index to Pension Files of Veterans Who Served Between 1861 and 1900.*

If a soldier or officer was tried before a general court-martial or if an individual or his unit was the subject of a court of inquiry or military commission, transcripts of the proceedings may be among the Records of the Office of the Judge Advocate General (Army) (RG 153). The registers to the proceedings have been reproduced as Microfilm Publication M1105, *Registers of the Records of the Proceedings of the U.S. Army General Courts-Martial, 1809-1890.*

Other record groups having information pertaining to the USCT include Records of the Bureau of Refugees, Freedmen, and Abandoned Lands (RG 105); Records of the Provost Marshal General's Bureau (Civil War) (RG 110); Records of the Accounting Officers of the Department of the Treasury (RG 217); and Records of U.S. Army Continental Commands, 1821-1920 (RG 393).

Roll list

Roll	Description
	1st United States Colored Heavy Artillery
1	Ackerson, David - Baker, Barney
2	Baker, George - Bogle, Harry
3	Bolden, Joseph - Brown, Edwin G.
4	Brown, George - Carmack, Bachus
5	Carmack, Gilbert - Cleveland, Loudon
6	Clevenger, Charles - Cune, John C.
7	Curd, George - Eblin, Richard
8	Eckles, Silas - Furbush, Lewis
9	Gaines, George - Greenleaf, Andrew
10	Greenleaf, Julius - Hart, Benjamin
11	Hartman, Henry - Hoff, David
12	Holland, John - Jackson, Thomas J.
13	Jackson, Washington - Jones, James
14	Jones, John - Ledgewood, Clayborne
15	Lee, Elhanon - Martin, Robert
16	Mason, Henry - McKenney, Elijah
17	McKinney, Lewis - Montcastle, Stewart
18	Montgomery, Alfred - Owens, Benjamin
19	Owens, Granville - Ragan, Nelson
20	Ragan, Rome - Russell, Orlando A.
21	Russell, Perry - Smith, Archie
22	Smith, Bart - Suddles, Robert
23	Summers, Joseph D. - Turner, Charles
24	Turner, Henry - Weir, Richard
25	Weir, Robert - Willis, Albert
26	Willis, Beverly S. - Zimmerman, William
	3d United States Colored Heavy Artillery
27	Abel, William - Armour, Lewis
28	Armstaed, William - Beaufort, Thomas
29	Beaumont, Henry - Bowler, Lafayette P.
30	Bowman, Fleming - Brummer, John E.
31	Bryan, Solon - Carter, William
32	Cartman, John - Cook, Isham
33	Cook, John - Davis, Doctor
34	Davis, George - Easen, Samuel
35	Easley, Wesley - Flinn, Clay
36	Flint, James - Gilbreth, Eli

Roll	Description
37	Gilbreth, Guy – Griffin, Samuel
38	Griffin, William – Harrison, James
39	Harrison, James C. – Hicks, Smith
40	Higginbottom, Nimrod – Hunt, Rubin
41	Hunt, William – Johnson, Charles
42	Johnson, Crawford – Jones, Isaac
43	Jones, Isam – Knight, Warren
44	Knox, Overton – Mabin, Baker
45	Mabin, James – McDonald, Manuel
46	McDonald, Ruben – Mills, Robert
47	Milroy, John – Nealy, Henry
48	Ned, Lewis – Patterson, Pembroke J. (Perin J.)
49	Patton, Richmond – Powers, William
50	Prewitt, Greene – Roberts, Lewis
51	Robinette, Henry – Scott, Edmond
52	Scott, Elijah – Smith, Peter
53	Smith, Randall – Tapscott, Julius
54	Tarwater, Jesse – Todd, William
55	Todd, Willis – Wallace, Robert
56	Wallace, Sandford – Wells, Duncan
57	Wells, Joseph – Williams, Guyo
58	Williams, George – Wolbrecht, Adolf
59	Wood, Charles – Young, William H.

4th United States Colored Heavy Artillery

60	Abbott, John – Barnes, Samuel
61	Barnes, Thomas – Britt, Jackson
62	Britten, Charles – Clark, Mitchell
63	Clay, Henry – Daniel, Richard
64	Daniels, William – Dyson, Jack
65	Dyson, Paul – Gardner, Riley
66	Gardner, Washington – Hall, Henry
67	Hall, Jack – Horton, Mack
68	Horton, William – Jones, Levi
69	Jones, Louis – Lewis, Stephen
70	Lewis, Thomas – McMurray, Anderson (John)
71	McMurray, George – Need, Benjamin
72	Nelson, John – Prior, Alfred
73	Prior, Gabriel – Rutland, Isaac
74	Ruttkay, Albert – Smith, Louis
75	Smith, Samuel – Turner, Frank
76	Turner, James – White, Henry
77	White, Raven – Youngs, William

Roll	Description
	5th United States Colored Heavy Artillery
78	Abbott, Richard – Armstrong, William
79	Arrindale, John B. – Bentley, Francis A.
80	Bentley, Isam – Brooks, Lawyer
81	Brooks, Robert – Cabin, Henry
82	Cabin, Shadrick – Coleman, Nathan
83	Coleman, William – Davidson, Ellis
84	Davis, Alfred – Dodd, Taylor
85	Dodds, Peter – Feltis, Jackson
86	Felton, Martin – Gilford, Charles
87	Gillespie, Gilbert – Hagan, Alex
88	Hagans, Joseph – Hayes, John S.
89	Haythorn, Henry – Hood, John
90	Hooker, William – James, Warren
91	January, Nathan – Johnson, Wiley
92	Johnson, William – Kindley, Edward
93	King, Elijah – Lewis, Ely J.
94	Lewis, George W. – Manitoe, Samuel
95	Manly, Elisha – McNeil, William
96	McQuilley, Clayton – Mosley, Jacob
97	Moss, Alfred – Parker, James
98	Parker, John H. – Powell, Monroe
99	Power, Henry – Roach, Watt
100	Robb, Benjamin – Shaw, Barrow
101	Shaw, James – Smith, Robert
102	Smith, Samuel – Tate, John
103	Taylor, Anderson – Trueman, Henry
104	Truman, Nelson – Ward, George
105	Ward, Jacob – West, Moses
106	Westbrook, Ellick – Williams, John B.
107	Williams, Jordan – Wood, Theodore
108	Woodam, Henry – Young, William
	Miscellaneous Service Cards
	Allen, Geo. – Young, L.
	6th United States Colored Heavy Artillery
109	Aaron, William – Barton, Granderson
110	Baseman, Jerry – Bracton, John
111	Bradford, Henry – Bush, Wilson
112	Bustis, Mondey – Clay, Henry
113	Clay, William – Davenport, William
114	Davenport, Wilson – Dunbar, Newton

Roll	Description
115	Dunbow, Hannibal - Fox, William
116	Francis, James - Green, George
117	Green, James - Harris, Hiram
118	Harris, John - Hopper, Anthony
119	Hopper, Handy - James, Joseph
120	Jasper, Samuel - Jones, John
121	Jones, Jonas - Leavitt, Charles B.
122	Lee, David - McBride, Samuel
123	McCabe, Alexander H. - Moore, Joseph
124	Moore, Manual - Owens, Willis
125	Page, Benjamin - Reece, Edward
126	Reese, William - Samuel, William
127	Sanders, Archibald - Smart, Robert
128	Smith, Aaron - Suzette, Armstead
129	Swanson, Jack - Trotter, George
130	Troyman, George - Waters, Robert
131	Waters, Wesley - Williams, Bedney
132	Williams, Benjamin - Wilson, George
133	Wilson, Guy - Young, Wesley
	Miscellaneous Service Cards
	Adams, Winder - Williams, John

8th United States Colored Heavy Artillery

134	Abanather, Paten - Beasley, George W.
135	Beasley, Washington - Boyd, Isaac
136	Boyd, Paine - Burrill, George
137	Burris, Abram - Cofield, Henry
138	Cofield, Isaac - Davis, George
139	Davis, Jerry - Edwards, Frank
140	Edwards, Gus - Ginigan, Thomas
141	Givens, George - Hampton, Phillip
142	Hancock, James - Hodge, Cotney
143	Hodge, Gaines - Johnson, Charles
144	Johnson, Clinton - Lee, Wash
145	Leeper, Thomas - Maxwell, Henry
146	Maxwell, Samuel - Moore, Amos
147	Moore, David - Pearson, Alexander
148	Pearson, Charley - Rice, Pleasant
149	Rice, Taylor - Sherrer, Elick
150	Shirles, James - Talbot, Henry
151	Talley, William - Turner, Robert
152	Tyler, Jerry - Williams, John
153	Williams, Sam - Young, William

Roll	Description
	9th United States Colored Heavy Artillery
154	Ailer, John - Coleman, Miles
155	Collins, Moses A. - Grosskopff, Edward
156	Grubb, Andrew - Landon, Harry
157	Lanier, Jesse - Payne, George
158	Payne, James - Tory, Madison
159	Toryand, Emanuel - Young, George
	10th United States Colored Heavy Artillery
160	Aaron, Benjamin - Auguste, Daniel
161	Augustus, Edward - Benson, George
162	Bentley, William H. - Brooks, Walker
163	Brooks, Washington - Camel, Paul
164	Cameron, Henry - Coleman, James
165	Coleman, John - Deale, Joseph
166	Deale, Thomas - Ellis, Robert
167	Ellis, Silas - Frederick, Joseph
168	Freeland, Martin A. - Grandison, Alfred
169	Grant, Moses - Harrison, Logan
170	Harrison, Thomas - Hoyt, Joseph
171	Hubbard, Henry - Jenkins, Solomon
172	Jennings, Caleb - Jozen, Jules
173	Julia, Nora - Libscomb, George
174	Lightfoot, Columbus - Maryday, John
175	Masdael, Noel - Misker, Robert
176	Mitchel, Alexander - Oldham, George B.
177	Oliver, Emile - Purnell, John
178	Putnam, Winthrop D. - Robinson, Henry
179	Robinson, Isaac - Simmons, Owen
180	Simms, Amos - Spencer, John
181	Spriggs, Thomas - Thornton, John
182	Thurston, Charles - Warner, Dudley
183	Warner, George E. - Wesley, John
184	West, Alexander - Willis, Stephen
185	Willson, George - Zozey, Jules Miscellaneous Service Cards Cann, Mercer - Grayson, John W.
186	Miscellaneous Service Cards Green, Andrew P. - Rygaard, Soren
187	Miscellaneous Service Cards Sabatier, Peter - Zevenette, Paul

Roll	Description
	11th United States Colored Heavy Artillery
188	Abbott, George M. – Bailey, James A.
189	Baird, Sylvester – Boardley, James
190	Boardley, John W. – Brown, Nathan
191	Brown, Samuel – Carter, William H.
192	Cartright, George W. – Commings, Hugh S.
193	Comstock, Joseph J. – Davis, Lyman
194	Davis, Stephen – Dubois, James
195	Duesenbury, Lewis – Fletcher, Roderick S.
196	Fletcher, Samuel – Garrison, John
197	Gaskell, George L. – Groff, Joseph
198	Guard, Andrew – Hector, William H.
199	Heelms, Harkness – Howard, Richard
200	Howard, Thomas – Jackson, Lewis
201	Jackson, Norton – Johnson, Joseph W.
202	Johnson, Nathan – King, Cornelius
203	King, George – Loucks, John A.
204	Low, Charles H. – Miller, Benjamin
205	Miller, Floyd N. – Nicholas, Samuel
206	Nichols, Alfred – Pierce, George W.
207	Pierce, John B. – Reed, Washington
208	Reese, Edward – Sampson, William H.
209	Sanders, Edward – Skanks, James S.
210	Skanks, Thomas C. – Sommerset, Levi
211	Southwick, Henry K. – Taylor, Alfred M.
212	Taylor, Charles – Townsend, John
213	Tracy, John – Warren, John
214	Washington, George – Whiting, Joseph C., Jr.
215	Wigden, Cyrus B. – Wilson, Samuel
216	Wilson, William – Young, Francis Miscellaneous Service Cards Abbot, George W. – Dyer, William S.
217	Miscellaneous Service Cards Earl, Peter – Young, William H.
	12th United States Colored Heavy Artillery
218	Abbott, John – Barbee, Squire
219	Barber, Sherwood – Boller, Jerry
220	Bolor, Collins – Bryant, Frederick
221	Bryant, Henry – Bush, Reason
222	Butler, Aaron – Clark, Richard
223	Clark, Samuel – Criffield, Lewis

Roll	Description
224	Christopher, James - Dock, Calvin E.
225	Dodge, Henry - Farnesley, Jack
226	Farrus, Ephraim - Gaves, David
227	Gentry, George - Haggin, George
228	Haggin, Samuel - Hawkins, Robert
229	Hawkins, Thomas - Hode, Adam
230	Hodge, Charles - Jackson, Andrew
231	Jackson, Augustus - Jopee, Joseph
232	Juda, Enoch - Lewis, Windsor
233	Lidick, Randall - Maton, Levi
234	Matthews, Charles W. - Mitchell, John
235	Mitchell, Monroe - Nelson, Joseph
236	Nesbin, William - Porter, Daniel
237	Porter, William R. - Richason, Shelly
238	Richie, George - Scott, Smith
239	Scott, Stephen - Smith, Leroy
240	Smith, Lyman - Taylor, Charles
241	Taylor, Cornelius - Turner, David
242	Turner, George - Warren, James
243	Washington, Anthony - Williams, Berry
244	Williams, Charles - Woodson, David
245	Woodson, Egbert - Young, Thomas Miscellaneous Service Cards Baughman, John - Heel, Rubin
246	Miscellaneous Service Cards Helm, Harry - Young, Stephen

13th United States Colored Heavy Artillery

247	Abbott, Josiah - Bell, Augustine
248	Bell, Charles - Brown, Jesse
249	Brown, Lindsay - Connor, Cyrus
250	Connor, Isaac - Dyre, George
251	Early, Edward - Ginn, Samuel
252	Ginnis, Sidney Clay - Heath, Henry
253	Heath, Lewis - Jarrett, Charles
254	Jay, Johnson - Lee, William
255	Lender, Richard - McKinney, Cass
256	McKinney, Henry Clay - Owens, Robert
257	Owens, Smith - Randolph, Loyd
258	Rankins, Archibald - Scott, Jerry
259	Scott, John - Sugg, Edmond
260	Suiter, Jacob A. - Waddie, Harry
261	Waddy, Peter - Willett, Price

Roll	Description
262	Willett, Robert – Young, William
263	Miscellaneous Service Cards Abbott, Josiah – Yumber, Anthony
	14th United States Colored Heavy Artillery
264	Acot, Isaac – Becton, Henry
265	Becton, Moses – Burke, George W.
266	Burke, William A. – Davis, Toney
267	Dean, Thomas – Fullford, William
268	Fulton, James – Hardy, William
269	Harget, Israel – Hovey, William
270	Howard, Calvin – Kensley, Silas
271	Kent, Henry – McKeever, Simon
272	McMichael, Joseph – Noble, William
273	Nobles, Charles – Randall, Evans
274	Randall, Willey – Shark, Bryant
275	Sheckelford, Daniel – Smith, Samuel
276	Smith, Sterling – Thompson, John Henry
277	Thompson, Mark – Weeks, Ezekiel
278	Weidman, Albert – Wilson, Payton
279	Wilson, Richard – Young, William Miscellaneous Service Cards Acott, Isaac – Young, William
	2d Regiment United States Colored Light Artillery
280	Able, John – Bernard, Albert
281	Berry, Henry – Brown, Sang
282	Brown, Thomas – Clark, William
283	Clay, Henry – Disen, Henry
284	Disen, Watkins – Francis, Henry
285	Franklin, Albert – Haines, Roe
286	Haines, Thomas – Hunt, Thomas
287	Hunter, Alexander M. – Kennedy, Abram
288	Kennel, George – March, George
289	Marcy, Anthony – Mobbs, Daniel
290	Moffet, John – Pattiller, Alfred
291	Pattiller, Patrick – Richardson, Jacob
292	Ridgeway, Anthony – Smith, Louis B.
293	Smith, Minus – Tucker, Alfred

Roll	Description
294	Tucker, Sandy – Williams, Calvin
295	Williams, Charles – Zinum, John
296	Miscellaneous Service Cards Abraham, Francis – Young, Ruben

Independent Battery, United States Colored Light Artillery

297	Alexander, John – Hancock, George W.
298	Hanson, Noah C. – Scott, Andrew
299	Scott, Reynolds – Yeager, John Miscellaneous Service Cards Douglass, H. Ford – Minor, P.M.

NATIONAL ARCHIVES MICROFILM PUBLICATIONS

Microfilm Publication M1818

COMPILED MILITARY SERVICE RECORDS OF VOLUNTEER UNION SOLDIERS WHO SERVED WITH THE UNITED STATES COLORED TROOPS: Artillery Organizations

Roll 196

11th United States Colored Heavy Artillery

Fletcher, Samuel – Garrison, John

NATIONAL ARCHIVES AND RECORDS ADMINISTRATION

[illegible] School Library.

Male	Female

CARD NUMBERS.

1	6 1 9 7 8 7 4	26
2	6 1 9 8 0 3 0	27
3	6 1 9 8 1 7 8	28
4	6 1 9 8 3 3 7	29
5	6 1 9 8 4 9 4	30
6	6 1 9 8 6 4 9	31
7	6 1 9 8 7 9 5	32
8	6 1 9 8 9 3 8	33
9	6 1 9 9 0 7 8	34
10	6 1 9 9 2 1 4	35
11	6 1 9 9 3 3 9	36
12	6 1 9 9 5 3 7	37
13	6 1 9 9 6 8 5	38
14	9 1 2 5 6 2 7	39
15		40
16		41
17		42
18		43
19		44
20		45
21		46
22		47
23		48
24		49
25		50

Book Mark:

See also

S 280 4563 Bonsm

J. D. Mark Esq.

K | 11 H. Art'y. | U.S.C.T.

Samuel Fletcher

, Co. K, 11 Reg't U. S. Col'd H. Art'y.

Appears on

Company Descriptive Book

of the organization named above.

DESCRIPTION.

Age 40 years; height 5 feet 2½ inches.

Complexion Dk

Eyes Dk; hair Blk

Where born Bath N.Y.

Occupation Porter

ENLISTMENT.

When Nov 28, 186 .

Where Prov. R. I.

By whom J. C. Engly; term 3 y'rs.

Remarks: Died in Regtl Hospital Camp Parapet La July 5. 1863 of Malarial Typhoid Fever

Griffith

(383y) Copyist.

I | 11 H. Art'y. | U.S.C.T.

Samuel Fletcher

Pt, Co. K, 14 Reg't R. I. Col'd H. Art'y.*

Age 40 years.

Appears on

Company Muster-in Roll

of the organization named above. Roll dated Cp. nr. Providence R.I. Dec 17, 1863.

Muster-in to date Dec 17, 1863.

Joined for duty and enrolled:

When Nov 28, 1863.

Where Providence R. I.

Period 3 years.

Valuation of horse, $ 100

Valuation of horse equipments, $ 100

Remarks:

* This organization subsequently became Co. I, 11 Reg't U. S. Colored Heavy Artillery.

Book mark:

J. K. Stewart

(356) Copyist.

F | 11 H. Art'y. | U.S.C.T.

Samuel Fletcher

Pt, Co. K, 14 Reg't R. I. Col'd H. Art'y.*

Appears on

Company Muster Roll

for Dec 17 to Dec 31, 1863.

Present or absent Present

Stoppage, $ 100 for

Due Gov't, $ 100 for

Valuation of horse, $ 100

Valuation of horse equipments, $ 100

Remarks:

*This organization subsequently became Co. K, 11 Reg't U. S. Colored Heavy Artillery.

Book mark:

J. N. Stewart

(358) *Copyist.*

I | 11 H. Art'y. | U.S.C.T.

Samuel Fletcher

Pt, Co. K, 14 Reg't R. I. Col'd H. Art'y.*

Appears on

Company Muster Roll

for Jan & Feb, 1864.

Present or absent Present

Stoppage, $ 100 for

Due Gov't, $ 100 for

Valuation of horse, $ 100

Valuation of horse equipments, $ 100

Remarks:

*This organization subsequently became Co. K, 11 Reg't U. S. Colored Heavy Artillery.

Book mark:

J. M. Stewart

(358) *Copyist.*

F | 11 H. Art'y. | U.S.C.T.

Samuel Fletcher

Pt, Co. K, 14 Reg't R. I. Col'd H. Art'y.*

Appears on

Company Muster Roll

for Mch & Apl, 1864.

Present or absent Present

Stoppage, $ 100 for

Due Gov't, $ 100 for

Valuation of horse, $ 100

Valuation of horse equipments, $ 100

Remarks: Stp for wiper
$ .20

*This organization subsequently became Co. K, 11 Reg't U. S. Colored Heavy Artillery.

Book mark:

J. A. Stewart

(358) *Copyist.*

11 H. Art'y. | U.S.C.T.

Samuel Tutcher

Pvt., Co. K, 8 Reg't U. S. Col'd H. Art'y.*

Appears on

Company Muster Roll

for May & June, 1864.

Present or absent Present.

Stoppage, $ 100 for

Due Gov't, $ 100 for

Valuation of horse, $ 100

Valuation of horse equipments, $ 100

Remarks:

† This organization subsequently became Co. K, 11 Reg't U. S. Colored Heavy Artillery.

Book mark:

R. Stewart

(358) Copyist.

F	11 H. Art'y.	U.S.C.T.

Samuel Fletcher

Pvt., Co. K, 11 Reg't U. S. Col'd H. Art'y.

Appears on

Company Muster Roll

for July & Aug., 1864.

Present or absent Present

Stoppage, $ 100 for

Due Gov't, $ 100 for

Valuation of horse, $ 100

Valuation of horse equipments, $ 100

Remarks: Free on 19 April 64
$16 per Month due
from enlistment
to April 30/64.

Book mark:

(358) Edward Copyist.

K | 11 H. Art'y. | U.S.C.T.

Samuel Fletcher

Pvt, Co. K, 11 Reg't U. S. Col'd H. Art'y.

Appears on

Company Muster Roll

for Sept & Oct, 186 4.

Present or absent Present

Stoppage, $ 100 for

Due Gov't, $ 82/100 for Clothing

Various Equipage

Valuation of horse, $ 100

Valuation of horse equipments, $ 100

Remarks:

Book mark:

S Fletcher

(358) Copyist.

2 | 11 H. Art'y. | U.S.C.T.

Hannah Fletcher

Pvt., Co. K, 11 Reg't U. S. Col'd H. Art'y.

Appears on

Company Muster Roll

for Nov & Dec, 1864.

Present or absent Present

Stoppage, $ 100 for

Due Gov't, $ 24/100 for Bedmates

Valuation of horse, $ 100

Valuation of horse equipments, $ 100

Remarks: Enrolled Jan 1
C. of G. 2, 82 Cl 2

Book mark:

C Mund

(358) Copyist.

F | 11 H. Art'y. | U.S.C.T.

Samuel Fletcher

Pvt., Co. K, 11 Reg't U. S. Col'd H. Art'y.

Appears on

Company Muster Roll

for Jan'y & Feb., 1865.

Present or absent Present.

Stoppage, $ 100 for

Due Gov't, $ 21/100 for Ordnance.

Valuation of horse, $ 100

Valuation of horse equipments, $ 100

Remarks: Drew U S Jan
C. & G. R. 82 Clr.

Book mark:

Steward

Copyist.

F | 11 H. Art'y. | U.S.C.T.

Samuel Fletcher

Pvt., Co. K, 11 Reg't U. S. Col'd H. Art'y.

Appears on

Company Muster Roll

for March & April, 1865.

Present or absent Present

Stoppage, $ 100 for

Due Gov't, $ 21 100 for Ordnance

Valuation of horse, $ 100

Valuation of horse equipments, $ 100

Remarks: Due U S for C & G. L. 83 Cts.

S Fletcher

(358) *Copyist.*

Jt | 11 H. Art'y. | U.S.C.T.

Samuel Fletcher

Pvt, Co. K, 11 Reg't U. S. Col'd H. Art'y.

Appears on

Company Muster Roll

for May & June, 186 5.

Present or absent Present

Stoppage, $ 100 for

Due Gov't, $ 1 09/100 for C & E

Valuation of horse, $ 100

Valuation of horse equipments, $ 100

Remarks:

Book mark:

Fletcher

(358) *Copyist.*

J. | 11 H. Art'y. | U.S.C.T.

Samuel Fletcher

Pvt, Co. K, 11 Reg't U. S. Col'd H. Art'y.

Appears on

Company Muster Roll

for July & Aug, 1865.

Present or absent

Stoppage, $ 100 for

Due Gov't, $ 1 62/100 for C & E lost and destroyed

Valuation of horse, $ 100

Valuation of horse equipments, $ 100

Remarks: Died in Hospital at Camp Parapet, La. July 5th 1865.

Book mark: 109,673.

Fletcher

(358) *Copyist.*

F | 11 H, A U.S.C.T.

Samuel Fletcher

Pvt., Co. A, 11 Reg't U. S. Col'd ~~Infantry~~ H. Arty.

Appears on **Co. Muster-out Roll,** dated

New Orleans, La, Oct. 2, 1865.

Muster-out to date ....., 186 .

Last paid to ....., 186 .

Clothing account:

Last settled ....., 186 ; **drawn since** $ 100

Due soldier $ ..... 100 ; **due U. S.** $ 100

Am't for cloth'g in kind or money adv'd $ 100

Due U. S. for arms, equipments, &c., $ 100

Bounty paid $ ..... 100 ; **due** $ 100

Remarks: Joined at Orig. Organ. Died in Regt. Hospital Camp Parapet, La. July 5. 1865. Malarial Typhoid Fever F. S. forwarded.

Book mark: 109,573 A. G. O.

Spruehan

(361) *Copyist.*

Fletcher Samuel

P, Co. 11 Reg't Mass Inf

9 Enclosures.

Bed Cards	Final Statements 4
Burial Records	Furloughs or L. of A.
Certs. of Dis. for Discharge	Med. Certificates
C. M. Charges	Med. Des. Lists
Descriptive Lists	Orders
Discharge Certificates	Pris. of War Record
Enlistment Papers 1	Resignations

Other papers relating to—

Admission to Hosp'l	Furlough or L. of A.
Casualty Sheet	Med. Examination
Confinement	Misc. Information 1
Contracts	Pay or Clothing
Death or Effects 5	Personal Reports
Desertion	Rank
Discharge from Hosp'l	Transfer to Hosp'l
Discharge from Service	Transfer to V. R. C.
Duty	Transportation

DECLARATION OF RECRUIT.

I, Samuel Gleason desiring to VOLUNTEER as a Soldier in the *ARMY OF THE UNITED STATES*, for the term of 3 years do declare that I am 40 years and months of age; that I have never been discharged from the United States service on account of disability or by sentence of a court martial, or by order, before the expiration of a term of enlistment; and I know of no impediment to my serving honestly and faithfully as a soldier for 3 years

Given at Penn'a

The 28th day of Nov 1863

Witness:

L. A. Marks

his
Samuel X Gleason
mark

No. 1

Samuel Gleason

Volunteered at Penn'a

Nov 28 1863,

By Maj. L. C. Loyless

Regiment of Cavalry

Discharged 18

Reg't of 11 U.S.C.H.A.

enlistment; last served in Company ( )

JUL 11 1871 RECEIVED

CONSENT IN CASE OF MINOR.

I, Do CERTIFY that I am the

of ; that the said

is years of age; and I do hereby freely give

my CONSENT to his volunteering as a SOLDIER in the ARMY OF THE UNITED STATES for the period of

Given at

The day of

Witness:

VOLUNTEER ENLISTMENT.

State of Rhode Island Town of Pawtucket

I, Samuel Fletcher born in Bath

in the State of New York aged 40 years, and by occupation

a Painter DO HEREBY ACKNOWLEDGE to have volunteered this 28th

day of Nov 1863 to serve as a SOLDIER in the ARMY OF THE UNITED STATES OF AMERICA, for the period of 3 years, unless sooner discharged by proper authority: Do also agree to accept such bounty, pay, rations and clothing, as are, or may be, established, by law for volunteers. And I, Samuel Fletcher do solemnly swear, that I will bear true faith and allegiance to the *United States of America*, and that I will serve them honestly and faithfully against all their enemies or opposers whomsoever; and that I will observe and obey the orders of the President of the United States, and the orders of the officers appointed over me, according to the Rules and Articles of War.

Sworn and Subscribed to, at Pawtucket
this 28th day of Nov 1863.
BEFORE Mr John Ladbyer Public Notary

his
Samuel + Fletcher
mark

I CERTIFY, ON HONOR, That I have carefully examined the above-named Volunteer, agreeable to the General Regulations of the Army, and that, in my opinion, he is free from all bodily defects and mental infirmity, which would, in any way, disqualify him from performing the duties of a soldier.

Johnson Landers M.D.

EXAMINING SURGEON.

I CERTIFY, ON HONOR, That I have minutely inspected the Volunteer, Samuel Fletcher previously to his enlistment, and that he was entirely sober when enlisted; that to the best of my judgment and belief, he is of lawful age; and that, in accepting him as duly qualified to perform the duties of an able-bodied soldier, I have strictly observed the Regulations which govern the recruiting service. This soldier has Dark *eyes* Black *hair* Dark *complexion*, is 5 *feet*, 7½ *inches high*.

May 14th *Regiment of* Rhy Artly *Volunteers*,

RECRUITING OFFICER.

FINAL STATEMENT

OF

Samuel Fletcher

11" Reg't of U.S.C.A. Heavy

VOLUNTEERS.

NOTE 1.—*Two* of these certificates (or duplicates) are to be given to each Volunteer Soldier or drafted man who may be discharged previously to the discharge of his company, that he may at once receive from the Paymaster the pay, &c., due him, and the captain or other COMMISSIONED officer commanding the company will certify to the act of the delivery of the duplicate certificates; on these certificates the Soldier is "entitled to" his *discharge*, and should also present his discharge to the Paymaster to have the payment endorsed on it. The discharge is to be given back to the Soldier by the Paymaster; the latter only retaining as his voucher the duplicate certificates.

NOTE 2.—If the Soldier is entitled to pay for the use of his horse, the Company Commander will certify to that fact on the back of both these final statements, and also to the time he has pay due for having been so mounted on his own horse.

NOTE 3.—When a Soldier is furnished with final statements, his descriptive list, if he has one, should be taken up by the officer who gives the Soldier these statements, and endorsed with a statement to this effect by the officer. This endorsement should exhibit a full statement of the time for which the Soldier was allowed pay on his final statements, the clothing account, and all other charges against him or in his favor, so as to comprise a complete exhibit of his account. It will then be transmitted to the company commander of the Soldier, who will enter all the data necessary to a full understanding of the Soldier's account on the muster roll upon which the Soldier's discharge is reported. The descriptive list will then be destroyed. The object of this is, that the remaining portion of the Soldier's account may be settled upon the receipt of these muster rolls, and the Soldier receive any pay or allowances that may be due him at the time of his discharge, and which may not appear on his final statements from the fact that his descriptive list is incomplete. These accounts for back pay, &c., are settled by the 2d Auditor of the Treasury Department.

NOTE 4.—Charges for loss or injury to ordnance, horse equipments, and other miscellaneous charges, should appear under the heading of "Other Stoppages."

NOTE 5.—Bounty paid by State authorities, and not by the United States, will not be entered on this statement.

NOTE 6.—Amounts due the Sutler and Laundress must be entered on the muster roll on which the discharge, death, desertion, &c., is reported, as well as on the final statement, otherwise the amount cannot be collected from the United States.

NOTE 7.—This blank will be used for deceased volunteers and drafted men, as well as for others.

NOTE 8.—Where a Soldier dies in Hospital or on detached service, his descriptive list, if he has one, should be sent with his final statements, in duplicate, to the Second Auditor, Washington, D. C.

1871

I certify, on honor, that Samuel Fletcher a Private of Captain C. R. Livingston Company (K) of the 11th Regiment of R. I. H. A. Heavy VOLUNTEERS, of the State of Rhode Island, born in Britt, State of New York, aged 40 years; 5 feet 2½ inches high; Dark complexion, Dark eyes, Bald hair, and by occupation a Printer, having joined the company on its original organization at Prov. R. I. Nov. 28th 1863, and enrolled in it at the muster into the service of the United States at Dutch Island R. I., on the 17th day of December, 1863, ~~or was mustered in service as a recruit, by~~ , at , on the day of , 186 , or was drafted and mustered into the service of the United States from the Enrollment District of the State of , at , on the day of , 186 , to serve in the Regiment, for the term of three years: and having served HONESTLY and FAITHFULLY with his Company in the field to the present date, is now entitled to a DISCHARGE by reason of death. Died in Regtl Hospital at Camp Parapet La July 5th 1865 of Malaria Typhoid Fever

The said Samuel Fletcher was last paid by Paymaster Major Hendrickson to include the 29th day of Feb., 1865, and has pay due him from that time to the present date; he is entitled to pay and subsistence for TRAVELING to place of enrollment, and whatever other allowances are authorized to volunteer soldiers, drafted men, or militia, so discharged. He has received from the United States CLOTHING amounting to 29 40/100 dollars, since the 31st day of December, 1864, when his clothing account was last settled. He has received from the United States —/100 dollars advanced BOUNTY.

There is to be stopped from him, on account of the State of , or other authorities, for CLOTHING, &c., received on entering service, /100 dollars; and for other stoppages, viz: 1 Mosquito Bar, 4 Pegles, 2 Letters "K", 2 Keys", 1 Pr Metallic Scales, 1 Screw driver, 1 Wiper 2 05/100 dollars.

He has been furnished with TRANSPORTATION in kind from the place of his discharge to ; and he has been SUBSISTED for TRAVELING to his place of enrollment, up to the , 186 .

He is indebted to , SUTLER, /100 dollars.

He was indebted to Prov. R. I. April 6th 1861, LAUNDRESS, /100 dollars.

Given in Duplicate, at Camp Parapet La., this 6th day of July, 1865.

C. R. Monroe
1st Lieut. 11th R. I. H. A. Heavy,
Commanding Company.

A. G. O. No. 95—First.]

FINAL STATEMENT

OF

Samuel S. Fletcher

11th Reg't of U. S. C. H. Heavy,

VOLUNTEERS.

NOTE 1.—*Two* of these certificates (or duplicates) are to be given to each Volunteer Soldier or drafted man who may be discharged previously to the discharge of his company, that he may at once receive from the Paymaster the pay, &c., due him, and the captain or other COMMISSIONED officer commanding the company will certify to the act of the delivery of the duplicate certificates; on these certificates the Soldier is "entitled to" his *discharge*, and should also present his discharge to the Paymaster to have the payment endorsed on it. The discharge is to be given back to the Soldier by the Paymaster; the latter only retaining as his voucher the duplicate certificates.

NOTE 2.—If the Soldier is entitled to pay for the use of his horse, the Company Commander will certify to that fact on the back of both these final statements, and also to the time he has pay due for having been so mounted on his own horse.

NOTE 3.—When a Soldier is furnished with final statements, his descriptive list, if he has one, should be taken up by the officer who gives the Soldier these statements, and endorsed with a statement to this effect by the officer. This endorsement should exhibit a full statement of the time for which the Soldier was allowed pay on his final statements, the clothing account, and all other charges against him or in his favor, so as to comprise a complete exhibit of his account. It will then be transmitted to the company commander of the Soldier, who will enter all the data necessary to a full understanding of the Soldier's account on the muster roll upon which the Soldier's discharge is reported. The descriptive list will then be destroyed. The object of this is, that the remaining portion of the Soldier's account may be settled upon the receipt of these muster rolls, and the Soldier receive any pay or allowances that may be due him at the time of his discharge, and which may not appear on his final statements from the fact that his descriptive list is incomplete. These accounts for back pay, &c., are settled by the 2d Auditor of the Treasury Department.

NOTE 4.—Charges for loss or injury to ordnance, horse equipments, and other miscellaneous charges, should appear under the heading of "Other Stoppages."

NOTE 5.—Bounty paid by State authorities, and not by the United States, will not be entered on this statement.

NOTE 6.—Amounts due the Sutler and Laundress must be entered on the muster roll on which the discharge, death, desertion, &c., is reported, as well as on the final statement, otherwise the amount cannot be collected from the United States.

NOTE 7.—This blank will be used for deceased volunteers and drafted men, as well as for others.

NOTE 8.—Where a Soldier dies in Hospital or on detached service, his descriptive list, if he has one, should be sent with his final statements, in duplicate, to the Second Auditor, Washington, D. C.

1864

I certify, on honor, that Samuel J Fletcher a Private of Captain O R Livingston's Company ("K") of the 11" Regiment of R.I.L.C.A. (Heavy) VOLUNTEERS, of the State of Rhode Island, born in Bath, State of New York, aged 40 years; 5 feet 2½ inches high; dark complexion, dark eyes, black hair, and by occupation a Porter, having joined the company on its original organization at Fort R.I. Nov. 28" 1863, and enrolled in it at the muster into the service of the United States at Dutch I. R.I., on the 17" day of December, 1863, (~~or was mustered in service as a recruit, by~~ ....., at ....., on the ..... day of ....., 186 , or was drafted and mustered into the service of the United States from the ..... Enrollment District of the State of ....., at ....., on the ..... day of ....., 186 ,) to serve in the Regiment, for the term of three years: and having served HONESTLY and FAITHFULLY with his Company in the field to the present date, is now entitled to a DISCHARGE by reason of death, Died in Regtl Hospital at Camp Parapet La. July 5" 1863 of Malaria Typhoid Fever

The said Samuel J Fletcher was last paid by Paymaster Major Hundhausen to include the 28" day of Feb, 1863, and has pay due him from that time to the present date; he is entitled to pay and subsistence for TRAVELING to place of enrollment, and whatever other allowances are authorized to volunteer soldiers, drafted men, or militia, so discharged. He has received from the United States CLOTHING amounting to 29 40/100 dollars, since the 31st day of December, 1864, when his clothing account was last settled. He has received from the United States ~~00/100~~ dollars advanced BOUNTY.

There is to be stopped from him, on account of the State of ....., or other authorities, for CLOTHING, &c., received on entering service, ... 00/100 dollars; and for other stoppages, viz: 1 Mosquito bar, 4 Eagles, 2 Letters K, 2 Pegtops 1 " 1 pr M.D. Tubes, 1 Screw driver, 1 Nipple, Cash #.43 C.G. Equipage 1 62/100 dollars. ~~$2.05~~

He has been furnished with TRANSPORTATION in kind from the place of his discharge to .....; and he has been SUBSISTED for TRAVELING to his place of enrollment, up to the ....., 186 .

He is indebted to ....., SUTLER, ... 00/100 dollars.

He ~~is~~ was indebted to Fort April 19" 1861, LAUNDRESS, ... 00/100 dollars.

Given in Duplicate, at Camp Parapet La, this 6th day of July, 1863.

C. H. Morrow
1st Lieut. 11th R.I.L.C.A. (Heavy)
Commanding Company.

A. G. O. No. 95—First.)

FINAL STATEMENT

OF

Samuel Fletcher

11th Reg't of U.S.C.T. Army,

VOLUNTEERS.

From July 5. 1865

NOTE 1.—*Two* of these certificates (or duplicates) are to be given to each volunteer soldier who may be discharged previously to the discharge of his company, that he may at once receive from the Paymaster the pay, &c., due him, and the captain or other officer commanding the company will certify to the act of the delivery of the duplicate certificates; on these certificates the Soldier is "entitled to" his *discharge*, and should also present his discharge to the Paymaster to have the payment endorsed on it. The discharge is to be given back to the Soldier by the Paymaster; the latter only retaining as his voucher the duplicate certificates.

NOTE 2.—If the Soldier is entitled to pay for the use of his horse, the Company Commander will certify to that fact, and also to the time he has pay due for having been so mounted on his own horse.

NOTE 3.—Amounts due the Sutler and Laundress must be entered on the Muster Roll on which the death, desertion, &c., is reported, as well as on the final statement, otherwise the amount cannot be collected from the United States.

NOTE 4.— This blank will be used for deceased volunteers as well as others.

ADJUTANT GENERAL'S OFFICE.
July 28 1865
Duplicate with Inventory sent 2d Auditor.

RECEIVED
Phila PA

I certify, on honor, that Samuel F Letcher a Private of Captain O. R. Livingston Company (K) of the 11th Regiment of R. I. L. A. Heavy VOLUNTEERS, of the State of Rhode Island, born in Bath, State of New York, aged 44 years; 5 feet 2½ inches high; dark complexion, dark eyes, blk hair, and by occupation a porter, having joined the company on its original organization at Prov R I, Feb 23rd 1863 and enrolled in it at the muster into the service of the United States at Dutch I R I, on the 5th day of December, 1863, (or was mustered in service as a recruit, by _____, at _____, on the _____ day of _____, 186 , to serve in the Regiment,) for the term of three years: and having served HONESTLY and FAITHFULLY with his Company in the field to the present date, is now entitled to a DISCHARGE by reason of death. Died in Keyte Hospital at Camp Parapet La. July 2nd 1863 of Malaria Typhoid Fever.

The said Samuel F Letcher was last paid by Paymaster Major Bendhouren to include the 23rd day of Feb, 1863, and has pay due him from that time to the present date; he is entitled to pay and subsistence for TRAVELING to place of enrollment and whatever other allowances are authorized to volunteer soldiers, or militia, so discharged. He has received 29 40/100 dollars, advanced by the United States on account of CLOTHING. since 3rd Dec. 1864

There is to be stopped from him, on account of the State of _____, or other authorities for CLOTHING, &c., received on entering service, _____ 00/100 dollars; also, for expenses of SUBSISTENCE for TRAVELING from place of enrollment to the place of rendezvous, amounting to _____ 00/100 dollars: and on account of the United States for EXTRA CLOTHING received in kind from _____ and for other stoppages, viz:

1 Mosquito Bar, 4 Eagles, 2 Letters K, 2 Figures 6, 1 Pr M. S. Socks, 1 Whisker, 1 Screw Driver amounting to 2 05/100 dollars; and he has been SUBSISTED for TRAVELING to his place of enrollment, up to the _____, 186 .

He is indebted to _____, SUTLER, _____ 00/100 dollars.
He was is indebted to Face April 6th 1863, LAUNDRESS, _____ 00/100 dollars.

Given in Duplicate, at Camp Parapet La this 6th day of July, 1863.

C. W. Monroe
2d Lieut. 11th R.I.L.A. Heavy
Commanding Company.

[A. G. O. No. 95.]

FINAL STATEMENT

OF

Samuel Fletcher

11th Reg't of U. S. C. A. Ry,

VOLUNTEERS.

NOTE 1.—*Two* of these certificates (or duplicates) are to be given to each volunteer soldier who may be discharged previously to the discharge of his company, that he may at once receive from the Paymaster the pay, &c., due him, and the captain or other officer commanding the company will certify to the act of the delivery of the duplicate certificates; on these certificates the Soldier is "entitled to" his *discharge*, and should also present his discharge to the Paymaster to have the payment endorsed on it. The discharge is to be given back to the Soldier by the Paymaster; the latter only retaining as his voucher the duplicate certificates.

NOTE 2.—If the Soldier is entitled to pay for the use of his horse, the Company Commander will certify to that fact, and also to the time he has pay due for having been so mounted on his own horse.

NOTE 3.—Amounts due the Sutler and Laundress must be entered on the Muster Roll on which the death, desertion, &c., is reported, as well as on the final statement, otherwise the amount cannot be collected from the United States.

NOTE 4.— This blank will be used for deceased volunteers as well as others.

Reed Rules 13. 1865 Rule 2.

I certify, on honor, that Samuel Fletcher a Private of Captain A. R. Livingston's Company (K) of the 11th Regiment of R.I.L.G.A. Heavy VOLUNTEERS, of the State of Rhode Island, born in Bath, State of New York, aged 40 years; 5 feet 2½ inches high; Dark complexion, Dark eyes, Black hair, and by occupation a Painter, having joined the company on its original organization at Prov. R.I. Nov. 28th 1863, and enrolled in it at the muster into the service of the United States at Dutch I. R.I., on the 17th day of December, 1863, (or was mustered in service as a recruit, by _____, at _____, on the _____ day of _____, 186 , to serve in the Regiment,) for the term of three years: and having served HONESTLY and FAITHFULLY with his Company in the field to the present date, is now entitled to a DISCHARGE by reason of death. Died in Regtl Hospital at Camp Parapet La. July 5th 1865 of Malaria Typhoid Fever.

The said Samuel Fletcher was last paid by Paymaster Major Sandbourn to include the 28th day of Feb., 186 5, and has pay due him from that time to the present date; he is entitled to pay and subsistence for TRAVELING to place of enrollment and whatever other allowances are authorized to volunteer soldiers, or militia, so discharged. He has received 29 40/100 dollars, advanced by the United States on account of CLOTHING. since 31st December 1864

There is to be stopped from him, on account of the State of _____, or other authorities for CLOTHING, &c., received on entering service, _____/100 dollars; also, for expenses of SUBSISTENCE for TRAVELING from place of enrollment to the place of rendezvous, amounting to _____/100 dollars: and on account of the United States for EXTRA CLOTHING received in kind from _____ and for other stoppages, viz:

1 Knapsack Strap, 4 Caps, 2 Letters "K", 2 Figures "2" for Knapsack Straps 1 Knife, 1 Screw Driver amounting to 2 05/100 dollars; and he has been SUBSISTED for TRAVELING to his place of enrollment, up to the _____, 186 .

He is indebted to _____, SUTLER, _____/100 dollars.
He was indebted to Fort Albie April 19th 1861, LAUNDRESS, _____/100 dollars.

Given in Duplicate, at Camp Parapet, this 6th day of July, 1865.

C. H. Monroe
1st Lieut. 11th U. S. C. A. Heavy
Commanding Company.

[A. G. O. No. 95.]

Camp Parapet La
July 6th 1865.

Monroe C. W. 1st Lieut.
11th U. S. C. A. Heavy
Comdy Co "K"

Letter transmitting one
Final Statement and
One Inventory
Effects of P. Fletcher
Private Company K,
11th U. S. C. A. Heavy

Death

Rec'd July 13. R. A. G. 1865

Camp Parapet La
July 6th 1864

1st Lieut & Adjutant
11th U. S. C. H. Heavy,

Sir:

I have
the honor to enclose herewith one
Final Statement and one Inventory
of Effects of Samuel Fletcher
Private Co. "K" 11th U. S. C. H. (Heavy)
I have the honor to be
Very respectfully your
Obt. Servant
C. N. Monroe
1st Lieut 11th U. S. C. H. Heavy
Comdg Co. "K"

6
July 2, 1865

ARTICLES OF WAR.

ART. 95. When any non-commissioned officer or soldier shall die, or be killed in the service of the United States, the then commanding officer of the troop or company shall, in the presence of two other commissioned officers, take an account of what effects he died possessed of, above his arms and accoutrements, and transmit the same to the office of the Department of War, which said effects are to be accounted for, and paid to the representatives of such deceased non-commissioned officer or soldier. And in case any of the officers, so authorized to take care of the effects of deceased officers and soldiers, should, before they have accounted to their representatives for the same, have occasion to leave the regiment or post, by preferment or otherwise, they shall, before they be permitted to quit the same, deposit in the hands of the commanding officer, or of the assistant military agent, all the effects of such deceased non-commissioned officers and soldiers, in order that the same may be secured for, and paid to, their respective representatives.

ARMY REGULATIONS—EDITION OF 1863.

DECEASED SOLDIERS.

Par. 152. Inventories of the effects of deceased non-commissioned officers and soldiers, required by the 95th Article of War, will be forwarded to the Adjutant General, by the commander of the company to which the deceased belonged, and a duplicate of the same to the colonel of the regiment. Final statements of pay, clothing, &c., in duplicate, will be sent to the Adjutant General with one copy of the inventory. When a soldier dies at a post or station absent from his company, it will be the duty of his immediate commander to furnish the required inventory and final statements, and, at the same time, to forward to the commanding officer of the company to which the soldier belonged, a report of his death, specifying the date, place, and cause; to what time he was last paid, and the money or other effects in his possession at the time of his decease; which report will be noted on the next muster roll of the company to which the man belonged. Each inventory will be endorsed, "Inventory of the effects of ——— ———, late of company (—,) ——— regiment of ———, who died at ———, the —— day of ———, 186-." If a legal representative receive the effects, it will be stated in the report. If the soldier leave no effects, the fact will be reported.

Par. 153. Should the effects of a deceased non-commissioned officer or soldier not be administered upon within a short period after his decease, they shall be disposed of by a Council of Administration, under the authority of the commanding officer of the post, and the proceeds deposited with the Paymaster, to the credit of the United States, until they shall be claimed by the legal representatives of the deceased.

Par. 154. In all such cases of sales by the Council of Administration, a statement in detail, or account of the proceeds, duly certified by the Council and commanding officer, accompanied by the Paymaster's receipt for the proceeds, will be forwarded by the commanding officer to the Adjutant General. The statement will be endorsed, "Report of the proceeds of the effects of ——— ———, late of company (—,) ——— regiment of ———, who died at ———, the —— day of ———, 186-."

NOTE 1.—The effects in all cases, when called for, should be turned over to the legal representative, without further authority from the Adjutant General. When the effects are turned over to the relatives of the deceased before these inventories are sent to the Adjutant General, their receipts therefor should be attached to the inventories. In all other cases, one copy will be sent with a letter of transmittal direct to the Adjutant General, and a duplicate retained by the officer.

NOTE 2.—Particular care should be taken to take receipts in duplicate from the Paymaster for any funds turned over to him; one copy should be sent direct to the Adjutant General and one retained by the officer.

INVENTORY OF THE EFFECTS

OF

Samuel Fletcher

Late of Company "K,"

11th Reg't of U.S.C.T. Heavy

Volunteers, who died at Camp Parapet La

on the 5th day of July 1865.

RECEIVED-ADJUTANT GENERAL'S OFFICE
JUL 8 1871

Recd July 13, 1865 R.H.R.

Inventory of the effects of Samuel Fletcher late a private of Captain A. B. Livingstone's Company "K" of the "1" Regiment of U. S. C. H. (Heavy) Volunteers, who was enrolled as a private at Providence in the State of Rhode Island on the 28" day of November 1863, and mustered into the service of the United States as a private on the 17" day of December 1863, at Dutch R.I. in Company "K", "11" Regiment of U.S.C.H. Artillery Volunteers, to serve 3 years or during the war; he was born in Bath in the State of New York: he was 40 years of age, 5 feet 9 1/2 inches high, dark complexion, dark eyes, black hair, and by occupation, when enrolled, a Porter; he died in Regtl Hospital, at Camp Parapet La. on the 5th day of July 1865, by reason of Malaria Typhoid Fever.

INVENTORY.

Articles.	No.	Articles.	No.	Articles.	No.
Hats		Pairs trowsers		Knapsacks	
Caps		Pairs flannel drawers			
Forage Caps		Pairs cotton drawers			
Great coats		Flannel shirts			
Uniform coats		Cotton shirts			
Uniform jackets		Pairs boots			
Flannel sack coats		Pairs shoes			
Blouses		Pairs socks			
S able frocks		Blankets			
Fatigue overalls		Haversacks			

Money.		
	Specie	$
	Notes	$

I certify, on honor, that the above inventory comprises all the effects of _____, deceased, and that the effects are in the hands of _____ at _____ to be disposed of by a Council of Administration.

(DUPLICATES.)

C. W. Morrow
1st Lt. "H" U. S. C. H. Artillery,
Commanding the Company.

Station: Camp Parapet La

Date: July 6" 1865

(A. G. O. No. 104.)

ARTICLES OF WAR.

ART. 95. When any non-commissioned officer or soldier shall die, or be killed in the service of the United States, the then commanding officer of the troop or company shall, in the presence of two other commissioned officers, take an account of what effects he died possessed of, above his arms and accoutrements, and transmit the same to the office of the Department of War, which said effects are to be accounted for, and paid to the representatives of such deceased non-commissioned officer or soldier. And in case any of the officers, so authorized to take care of the effects of deceased officers and soldiers, should, before they have accounted to their representatives for the same, have occasion to leave the regiment or post, by preferment or otherwise, they shall, before they be permitted to quit the same, deposit in the hands of the commanding officer, or of the assistant military agent, all the effects of such deceased non-commissioned officers and soldiers, in order that the same may be secured for, and paid to, their respective representatives.

ARMY REGULATIONS—EDITION OF 1861.

DECEASED SOLDIERS.

Par. 152. Inventories of the effects of deceased non-commissioned officers and soldiers, required by the 95th Article of War, will be forwarded to the Adjutant General, by the commander of the company to which the deceased belonged, and a duplicate of the same to the colonel of the regiment. Final statements of pay, clothing, &c., will be sent with the inventories. When a soldier dies at a post or station absent from his company, it will be the duty of his immediate commander to furnish the required inventory, and, at the same time, to forward to the commanding officer of the company to which the soldier belonged, a report of his death, specifying the date, place, and cause; to what time he was last paid, and the money or other effects in his possession at the time of his decease; which report will be noted on the next muster roll of the company to which the man belonged. Each inventory will be endorsed, "Inventory of the effects of ——— ———, late of company (—) ——— regiment of ———, who died at ———, the——— day of ———, 186-." If a legal representative receive the effects, it will be stated in the report. If the soldier leave no effects, the fact will be reported.

Par. 153. Should the effects of a deceased non-commissioned officer or soldier not be administered upon within a short period after his decease, they shall be disposed of by a Council of Administration, under the authority of the commanding officer of the post, and the proceeds deposited with the Paymaster, to the credit of the United States, until they shall be claimed by the legal representatives of the deceased.

Par. 154. In all such cases of sales by the Council of Administration, a statement in detail, or account of the proceeds, duly certified by the Council and commanding officer, accompanied by the Paymaster's receipt for the proceeds, will be forwarded by the commanding officer to the Adjutant General. The statement will be endorsed, "Report of the proceeds of the effects of ——— ———, late of company (—) ——— regiment of ———, who died at ———, the —— day of ———, 186-."

NOTE 1.—The effects in all cases, when called for, should be turned over to the legal representative, without further authority from the Adjutant General. When the effects are turned over to the relatives of the deceased before these inventories are sent to the Adjutant General, their receipts therefor should be attached to the inventories. In all other cases, one copy will be sent with a letter of transmittal direct to the Adjutant General, and a duplicate retained by the officer.

NOTE 2.—Particular care should be taken to take receipts in duplicate from the Paymaster for any funds turned over to him; one copy should be sent direct to the Adjutant General and one retained by the officer.

INVENTORY OF THE EFFECTS

OF

Samuel Fletcher

Late of Company "K"

11" *Reg't of* U.S.C.A. Hy,

Volunteers, who died at Columbia Tenn

on the 5" *day of* July 1865.

RECEIVED Jul 8 1871 ADJUTANT GEN'L

Inventory of the effects of Samuel Fletcher late a Private of Captain O. N. Livingston's Company "K," of the 11th Regiment of U. S. C. H. Heavy Volunteers, who was enrolled as a Private at Providence in the State of Rhode Island on the 28th day of November 1863, and mustered into the service of the United States as a Private on the 17th day of December 1863, at Dutch Id. in Company "K," 11th Regiment of U. S. C. H. Heavy Volunteers, to serve 3 years or during the war; he was born in Bath in the State of New York; he was 40 years of age, 5 feet 9 1/2 inches high, dark complexion, dark eyes, black hair, and by occupation, when enrolled, a Porter; he died in Regtl Hospitae, at Camp Barnett La, on the 6th day of July 1864, by reason of Malaria Typhoid Fever

INVENTORY.

Articles.	No.	Articles.	No.	Articles.	No.
Hats		Pairs trowsers		Knapsacks	
Caps		Pairs flannel drawers			
Forage caps		Pairs cotton drawers			
Great coats		Flannel shirts			
Uniform coats		Cotton shirts			
Uniform jackets		Pairs boots			
Flannel sack coats		Pairs shoes			
Blouses		Pairs socks			
Stable frocks		Blankets			
Fatigue overalls		Haversacks			

Money.		
	Specie	$
	Notes	$

I CERTIFY, ON HONOR, that the above inventory comprises all the effects of _____, deceased, and that the effects are in the hands of _____ at _____ to be disposed of by a Council of Administration.

C. K. Monroe
1st Lieut. 11th U. S. C. H. Heavy
Commanding the Company.

(DUPLICATES.)

STATION: Camp Barnett La.

DATE: July 6th 1864

[A. G. O. No. 104.]

ARTICLES OF WAR.

ART. 95. When any non-commissioned officer or soldier shall die, or be killed in the service of the United States, the then commanding officer of the troop or company shall, in the presence of two other commissioned officers, take an account of what effects he died possessed of, above his arms and accoutrements, and transmit the same to the office of the Department of War, which said effects are to be accounted for, and paid to the representatives of such deceased non-commissioned officer or soldier. And in case any of the officers, so authorized to take care of the effects of deceased officers and soldiers, should, before they have accounted to their representatives for the same, have occasion to leave the regiment or post, by preferment or otherwise, they shall, before they be permitted to quit the same, deposit in the hands of the commanding officer, or of the assistant military agent, all the effects of such deceased non-commissioned officers and soldiers, in order that the same may be secured for, and paid to, their respective representatives.

ARMY REGULATIONS—EDITION OF 1863.

DECEASED SOLDIERS.

Par. 152. Inventories of the effects of deceased non-commissioned officers and soldiers, required by the 95th Article of War, will be forwarded to the Adjutant General, by the commander of the company to which the deceased belonged, and a duplicate of the same to the colonel of the regiment. Final statements of pay, clothing, &c., in duplicate, will be sent to the Adjutant General with one copy of the inventory. When a soldier dies at a post or station absent from his company, it will be the duty of his immediate commander to furnish the required inventory and final statements, and, at the same time, to forward to the commanding officer of the company to which the soldier belonged, a report of his death, specifying the date, place, and cause; to what time he was last paid, and the money or other effects in his possession at the time of his decease; which report will be noted on the next muster roll of the company to which the man belonged. Each inventory will be endorsed, "Inventory of the effects of —— ——, late of company (—,) —— regiment of ——, who died at ——, the —— day of ——, 186–." If a legal representative receive the effects, it will be stated in the report. If the soldier leave no effects, the fact will be reported.

Par. 153. Should the effects of a deceased non-commissioned officer or soldier not be administered upon within a short period after his decease, they shall be disposed of by a Council of Administration, under the authority of the commanding officer of the post, and the proceeds deposited with the Paymaster, to the credit of the United States, until they shall be claimed by the legal representatives of the deceased.

Par. 154. In all such cases of sales by the Council of Administration, a statement in detail, or account of the proceeds, duly certified by the Council and commanding officer, accompanied by the Paymaster's receipt for the proceeds, will be forwarded by the commanding officer to the Adjutant General. The statement will be endorsed, "Report of the proceeds of the effects of —— ——, late of company (—,) —— regiment of ——, who died at ——, the —— day of ——, 186–."

NOTE 1.—The effects in all cases, when called for, should be turned over to the legal representative, without further authority from the Adjutant General. When the effects are turned over to the relatives of the deceased before these inventories are sent to the Adjutant General, their receipts therefor should be attached to the inventories. In all other cases, one copy will be sent with a letter of transmittal direct to the Adjutant General, and a duplicate retained by the officer.

NOTE 2.—Particular care should be taken to take receipts in duplicate from the Paymaster for any funds turned over to him; one copy should be sent direct to the Adjutant General and one retained by the officer.

INVENTORY OF THE EFFECTS

OF

Samuel Fletcher

Late of Company "K"

11" *Reg't of* U.S.C.A. Heavy

Volunteers, who died at Camp Tarrytown

on the 5" *day of* July 186 5.

JUL 9 1871

Inventory of the effects of Samuel F Fletcher late a private of Captain C. R. Livingston Company "K," of the "H" Regiment of U. S. C. H. Heavy Volunteers, who was enrolled as a private at Providence in the State of Rhode Island on the "28" day of November 1863, and mustered into the service of the United States as a private on the "17" day of December 1863, at Dutch I. R. I. in Company "K," "H" Regiment of U. S. C. H. Heavy Volunteers, to serve 3 years or during the war; he was born in Bath in the State of New York: he was 40 years of age, 5 feet 2 1/2 inches high, dark complexion, dark eyes, black hair, and by occupation, when enrolled, a Porter; he died in Reyt Hospital, at Camp Parapet La on the 5th day of July 1865, by reason of Malaria Typhoid Fever.

INVENTORY.

Articles.	No.	Articles.	No.	Articles.	No.
Hats		Pairs trowsers		Knapsacks	
Caps		Pairs flannel drawers			
Forage Caps		Pairs cotton drawers			
Great coats		Flannel shirts			
Uniform coats		Cotton shirts			
Uniform jackets		Pairs boots			
Flannel sack coats		Pairs shoes			
Blouses		Pairs socks			
S able frocks		Blankets			
Fatigue overalls		Haversacks			

Money.		
	Specie	$
	Notes	$

I certify, on honor, that the above inventory comprises all the effects of ..... deceased, and that the effects are in the hands of ..... at ..... to be disposed of by a Council of Administration.

(DUPLICATES.)

C. W. Monroe
1st Lieut. H. Co. U. S. C. H. Heavy
Commanding the Company.

Station: Camp Parapet La

Date: July 6th 1865

[A. G. O. No. 104.]

[illegible], 11 U.S.Col'd H.Art'y.

Private	Private

CARD NUMBERS.

6201395	26
6201552	27
6201707	28
6201866	29
6202023	30
6202169	31
6202320	32
6202447	33
6202568	34
6202741	35
6202976,	36
9125947	37
	38
	39
	40
	41
	42
	43
	44
	45
	46
	47
	48
	49
	50

Book Mark: C.D. - 12 - 49.

See also

D | **11** H. Art'y. | **U.S.C.T.**

Weston Fletcher

....., Co. M, 11 Reg't U. S. Col'd H. Art'y.

Appears on

Company Descriptive Book

of the organization named above.

DESCRIPTION.

Age 26 years; height 5 feet 5 inches.

Complexion DK

Eyes DK; hair DK

Where born Ohio

Occupation Cooper

ENLISTMENT.

When Dec 21, 1863.

Where Prov R I

By whom J. C. Engly; term 3 y'rs.

Remarks: Mustered into Service Jan 25/64 by Capt H Silvey at Providence R I. Died in Regtl Hospitl at Camp Parapet La June 18" 1865 of Typhus Fever Mustered out

Griffiths

(3830) Copyist.

M | 11 H. Art'y. | U.S.C.T.

Weston Fletcher

Pvt., Co. M, 14 Reg't R. I. Col'd H. Art'y.*

Age 26 years.

Appears on

Company Muster-in Roll

of the organization named above. Roll dated Providence, R. I. Jan. 25, 1864.

Muster-in to date Jan. 25, 1864.

Joined for duty and enrolled:

When Dec. 21, 1863.

Where Prov., R. I.

Period 3 years.

Valuation of horse, $100

Valuation of horse equipments, $100

Remarks: 2 District

* This organization subsequently became Co. M, 11 Reg't U. S. Colored Heavy Artillery.

Book mark:

Fabler

F | 11 H. Art'y. | U.S.C.T.

Western Fletcher

Pvt, Co. M, 14 Reg't R. I. Col'd H. Art'y.*

Appears on

Company Muster Roll

for 25 Jan'y to 29 Feb, 1864.

Present or absent Present

Stoppage, $ ---- 100 for ----

Due Gov't, $ ---- 100 for ----

Valuation of horse, $ ---- 100

Valuation of horse equipments, $ ---- 100

Remarks:

This organization subsequently became Co. M, 11 Reg't U. S. Colored Heavy Artillery.

Book mark:

(358) J Haidemann

Copyist.

F | 11 H. Art'y. | U.S.C.T.

Western Fletcher

Pvt., Co. M, 14 Reg't R. I. Col'd H. Art'y.*

Appears on

Company Muster Roll

for March & April, 1864.

Present or absent Present

Stoppage, $ 100 for

Due Gov't, $ 100 for

Valuation of horse, $ 100

Valuation of horse equipments, $ 100

Remarks: Daily Duty in Right Commissary Dept.

This organization subsequently became Co. M, 11 Reg't U. S. Colored Heavy Artillery.

Book mark:

(358) J. Hunderman

Copyist.

K | 11 H. Art'y. | U.S.C.T.

Weston Fletcher

Pvt, Co. M, 8 Reg't U. S. Col'd H. Art'y.*

Appears on

Company Muster Roll

for May & June, 1864.

Present or absent Present

Stoppage, $ 100 for

Due Gov't, $ 100 for

Valuation of horse, $ 100

Valuation of horse equipments, $ 100

Remarks: Daily duty - Regtl Comy. Dept.

†This organization subsequently became Co. M, 11 Reg't U. S. Colored Heavy Artillery.

Book mark:

Parker

(358) Copyist.

K | 11 H. Art'y. | U.S.C.T.

Weston Fletcher

Pvt., Co. M, 11 Reg't U. S. Col'd H. Art'y.

Appears on

Company Muster Roll

for Aug. 1, 1864.

Present or absent Present

Stoppage, $ 100 for

Due Gov't, $ 100 for

Valuation of horse, $ 100

Valuation of horse equipments, $ 100

Remarks: $16 per M. due from enlistment to Apl. 30/64 Free on 19" Apl., 1861.

Book mark:

Talbert

(358) *Copyist.*

F | 11 H. Art'y. | U.S.C.T.

Weston Fletcher

W.M., Co. M, 11 Reg't U. S. Col'd H. Art'y.

Appears on

Company Muster Roll

for Sept & Oct, 1864.

Present or absent Present.

Stoppage, $ 100 for

Due Gov't, $ 100 for

Valuation of horse, $ 100

Valuation of horse equipments, $ 100

Remarks:

Book mark:

(358) L. F. Roberts
Copyist.

Ft	11 H. Art'y.	U.S.C.T.

Weston Fletcher

Pvt, Co. M, 11 Reg't U. S. Col'd H. Art'y.

Appears on

Company Muster Roll

for Nov & Dec, 1864.

Present or absent Present.

Stoppage, $.....100 for .....

.....

.....

Due Gov't, $.....100 for .....

.....

Valuation of horse, $.....100

Valuation of horse equipments, $.....100

Remarks:.....

.....

.....

.....

.....

.....

.....

.....

Book mark:.....

A. Stubbs

Copyist.

Fr | **11 H. Art'y.** | **U.S.C.T.**

Peter Fletcher

Pvt., Co. M, 11 Reg't U. S. Col'd H. Art'y.

Appears on

Company Muster Roll

for Jan & Feb, 1865

Present or absent Present

Stoppage, $ 100 for

Due Gov't, $ 100 for

Valuation of horse, $ 100

Valuation of horse equipments, $ 100

Remarks:

Book mark:

A. Hubbell

(358) *Copyist.*

Fr | 11 H. Art'y. | U.S.C.T.

Weston Fletcher

Pvt., Co. M, 11 Reg't U. S. Col'd H. Art'y.

Appears on

Company Muster Roll

for Mch & a/pl, 1865.

Present or absent Present

Stoppage, $ 100 for

Due Gov't, $ 100 for

Valuation of horse, $ 100

Valuation of horse equipments, $ 100

Remarks:

Book mark:

(358) N. Hubbell
Copyist.

(2 F 1 | 11 H. Art'y. | U.S.C.T.

Austin Fatcher

Private Co. M, 11 Reg't U. S. Col'd H. Art'y.

Appears on

Company Muster Roll

for May & June, 1865.

Present or absent Absent

Stoppage, $ 100 for

Due Gov't, $ 100 for

Valuation of horse, $ 100

Valuation of horse equipments, $ 100

Remarks: Died in Regt'l Hosp't'l. at Camp Parapet La. June 16/65. of Typhus Fever.

Book mark:

(Fawcett

(358) Copyist.

F. | 11 H. Art'y. | U.S.C.T.

Weston Fletcher

Priv., Co. M, 11 Reg't U. S. Col'd H. Art'y.

Appears on **Co. Muster-out Roll,** dated New Orleans La, Oct 2, 1865.

Muster-out to date ....., 186 .

Last paid to ....., 186 .

Clothing account:

Last settled....., 186 ; drawn since $.....100

Due soldier $.....100; due U. S. $.....100

Am't for cloth'g in kind or money adv'd $.....100

Due U. S. for arms, equipments, &c., $ 100

Bounty paid $.....100; due $.....100

Remarks: Joined at original organization. Died at Camp Parapet La. June 18/65. of Tiphus Fever. Final Statement forwarded June 23/65.

Book mark: Died June 16/65 & B. U. 12 L. 49.

Fornett

(361) *Copyist.*

Fletcher, Weston

P, Co. M, 11 Regt U.S.C.H.A.

8 Enclosures.

Bed Cards	Descriptive Lists
Burial Records	Final Statements 4
Certs. of Dis. for Discharge	Furloughs
C. M. Charges	Med. Des. Lists
Med. Certificates E. P. 1	Orders

Other papers relating to—

Admission to Hosp'l	Furlough
Casualty Sheet (Officer's)	Med. Examination
Confinement	Misc. Information
Contracts	Pay or Clothing
Death or Effects 3	Personal Reports
Desertions	Rank
Discharge from Hosp'l	Transfer to Hosp'l
Discharge from Service	Transfer to V. R. C.
Duty	Transportation

DECLARATION OF RECRUIT.

I, Weston Fletcher desiring to VOLUNTEER as a Soldier in the *ARMY OF THE UNITED STATES*, for the term of 3 years do declare that I am 26 years and months of age; that I have never been discharged from the United States service on account of disability or by sentence of a court martial, or by order, before the expiration of a term of enlistment; and I know of no impediment to my serving honestly and faithfully as a soldier for 3 Year

Given at Providence
The 21st day of Dec 1863

Witness: J. F. Fletcher

Weston Fletcher

11 U.S.C.H.A.

No. 50

Weston Fletcher

Volunteered at Providence

Dec

By Lt Col Maj Capt

Regiment of 14

1863

enlistment; last served in Company ( ) *Regiment*

Reg't of

Discharged 18

JUL 11 1871

CONSENT IN CASE OF MINOR.

I, Do CERTIFY that I am the
of ; that the said
is years of age; and I do hereby freely give
my CONSENT to his volunteering as a SOLDIER in the ARMY OF THE UNITED STATES for the period of

Given at
The day of

Witness:

VOLUNTEER ENLISTMENT.

State of Rhode Island

Town of Providence

I, Weston Fletcher born in

in the State of Ohio aged 26 years, and by occupation

a Cooper DO HEREBY ACKNOWLEDGE to have volunteered this 21st

day of Dec 18 63 to serve as a SOLDIER in the ARMY OF THE UNITED STATES OF AMERICA, for the period of 3 years, unless sooner discharged by proper authority: Do also agree to accept such bounty, pay, rations and clothing, as are, or may be, established, by law for volunteers. And I, Weston Fletcher do solemnly swear, that I will bear true faith and allegiance to the *United States of America*, and that I will serve them honestly and faithfully against all their enemies or opposers whomsoever; and that I will observe and obey the orders of the President of the United States, and the orders of the officers appointed over me, according to the Rules and Articles of War.

Sworn and Subscribed to, at Providence } Weston Fletcher
this 21st day of Dec 18 63 }
BEFORE Me John Labyn Public Notary

I CERTIFY, ON HONOR, That I have carefully examined the above-named Volunteer, agreeable to the General Regulations of the Army, and that, in my opinion, he is free from all bodily defects and mental infirmity, which would, in any way, disqualify him from performing the duties of a soldier.

Johnson Andrews M.D.

EXAMINING SURGEON.

I CERTIFY, ON HONOR, That I have minutely inspected the Volunteer, Weston Fletcher previously to his enlistment, and that he was entirely sober when enlisted; that to the best of my judgment and belief, he is of lawful age; and that, in accepting him as duly qualified to perform the duties of an able-bodied soldier, I have strictly observed the Regulations which govern the recruiting service. This soldier has Dark eyes Dark hair Dark *complexion*, is 5 *feet*, 5 *inches high*.

John Ingley

May 14th *Regiment of* 3d. Art'y *Volunteers*,

RECRUITING OFFICER.

ARTICLES OF WAR.

ART. 95. When any non-commissioned officer or soldier shall die, or be killed in the service of the United States, the then commanding officer of the troop or company shall, in the presence of two other commissioned officers, take an account of what effects he died possessed of, above his arms and accoutrements, and transmit the same to the office of the Department of War, which said effects are to be accounted for, and paid to the representatives of such deceased non-commissioned officer or soldier. And in case any of the officers, so authorized to take care of the effects of deceased officers and soldiers, should, before they have accounted to their representatives for the same, have occasion to leave the regiment or post, by preferment or otherwise, they shall, before they be permitted to quit the same, deposit in the hands of the commanding officer, or of the assistant military agent, all the effects of such deceased non-commissioned officers and soldiers, in order that the same may be secured for, and paid to, their respective representatives.

ARMY REGULATIONS—EDITION OF 1863.

DECEASED SOLDIERS.

Par. 152. Inventories of the effects of deceased non-commissioned officers and soldiers, required by the 95th Article of War, will be forwarded to the Adjutant General, by the commander of the company to which the deceased belonged, and a duplicate of the same to the colonel of the regiment. Final statements of pay, clothing, &c., in duplicate, will be sent to the Adjutant General with one copy of the inventory. When a soldier dies at a post or station absent from his company, it will be the duty of his immediate commander to furnish the required inventory and final statements, and, at the same time, to forward to the commanding officer of the company to which the soldier belonged, a report of his death, specifying the date, place, and cause; to what time he was last paid, and the money or other effects in his possession at the time of his decease; which report will be noted on the next muster roll of the company to which the man belonged. Each inventory will be endorsed, "Inventory of the effects of ——— ———, late of company (—,) ——— regiment of ———, who died at ———, the —— day of ———, 186–." If a legal representative receive the effects, it will be stated in the report. If the soldier leave no effects, the fact will be reported.

Par. 153. Should the effects of a deceased non-commissioned officer or soldier not be administered upon within a short period after his decease, they shall be disposed of by a Council of Administration, under the authority of the commanding officer of the post, and the proceeds deposited with the Paymaster, to the credit of the United States, until they shall be claimed by the legal representatives of the deceased.

Par. 154. In all such cases of sales by the Council of Administration, a statement in detail, or account of the proceeds, duly certified by the Council and commanding officer, accompanied by the Paymaster's receipt for the proceeds, will be forwarded by the commanding officer to the Adjutant General. The statement will be endorsed, "Report of the proceeds of the effects of ——— ———, late of company (—,) ——— regiment of ———, who died at ———, the —— day of ———, 186–."

NOTE 1.—The effects in all cases, when called for, should be turned over to the legal representative, without further authority from the Adjutant General. When the effects are turned over to the relatives of the deceased before these inventories are sent to the Adjutant General, their receipts therefor should be attached to the inventories. In all other cases, one copy will be sent with a letter of transmittal direct to the Adjutant General, and a duplicate retained by the officer.

NOTE 2.—Particular care should be taken to take receipts in duplicate from the Paymaster for any funds turned over to him; one copy should be sent direct to the Adjutant General and one retained by the officer.

INVENTORY OF THE EFFECTS

OF

Weston Thetcher

Late of Company A

11th *Reg't of* U.S. Col'd Infty

Volunteers, who died at Camp Parapet La

on the 16th *day of* June 186 5.

Rec'd R.H. 2. June 28, 1865

Inventory of the effects of Weston Fletcher late a Private of Captain H. F. Southwick's Company M of the 11th Regiment of U.S.C.H.Artly Volunteers, who was enrolled as a Private at Providence in the State of Rhode Island on the 21st day of December 1863, and mustered into the service of the United States as a Private on the 25th day of January 1864, at Prov. R.I. in Company M, 11th Regiment of U.S.C.H.Artly Volunteers, to serve Three years or during the war; he was born in _____ in the State of Ohio; he was 26 years of age, 5 feet 5 inches high, Dk complexion, Dk eyes, Dk hair, and by occupation, when enrolled, a Cooper; he died in Regimental Hospital, at Camp Parapet La on the 16 day of June 1865, by reason of Typhoid Fever

INVENTORY.

Articles.	No.	Articles.	No.	Articles.	No.
Hats		Pairs trowsers		Knapsacks	
Caps	No Effects	Pairs flannel drawers	No Effects		
Forage Caps		Pairs cotton drawers			
Great coats		Flannel shirts			
Uniform coats		Cotton shirts			
Uniform jackets		Pairs boots			
Flannel sack coats		Pairs shoes			
Blouses		Pairs socks			
Stable frocks		Blankets			
Fatigue overalls		Haversacks			

Money.		
	Specie	$ None
	Notes	$

I certify, on honor, that the above inventory comprises all the effects of Weston Fletcher, deceased, and that the effects are in the hands of _____ at _____ to be disposed of by a Council of Administration.

(DUPLICATES.)

Warren Ralph
1st Lt 11th U.S.C.H.Artly
Commanding the Company.

Station: Camp Parapet La

Date: June 22d 1865

[A. G. O. No. 104.]

ARTICLES OF WAR.

ART. 95. When any non-commissioned officer or soldier shall die, or be killed in the service of the United States, the then commanding officer of the troop or company shall, in the presence of two other commissioned officers, take an account of what effects he died possessed of, above his arms and accoutrements, and transmit the same to the office of the Department of War, which said effects are to be accounted for, and paid to the representatives of such deceased non-commissioned officer or soldier. And in case any of the officers, so authorized to take care of the effects of deceased officers and soldiers, should, before they have accounted to their representatives for the same, have occasion to leave the regiment or post, by preferment or otherwise, they shall, before they be permitted to quit the same, deposit in the hands of the commanding officer, or of the assistant military agent, all the effects of such deceased non-commissioned officers and soldiers, in order that the same may be secured for, and paid to, their respective representatives.

ARMY REGULATIONS—EDITION OF 1863.

DECEASED SOLDIERS.

Par. 152. Inventories of the effects of deceased non-commissioned officers and soldiers, required by the 95th Article of War, will be forwarded to the Adjutant General, by the commander of the company to which the deceased belonged, and a duplicate of the same to the colonel of the regiment. Final statements of pay, clothing, &c., in duplicate, will be sent to the Adjutant General with one copy of the inventory. When a soldier dies at a post or station absent from his company, it will be the duty of his immediate commander to furnish the required inventory and final statements, and, at the same time, to forward to the commanding officer of the company to which the soldier belonged, a report of his death, specifying the date, place, and cause; to what time he was last paid, and the money or other effects in his possession at the time of his decease; which report will be noted on the next muster roll of the company to which the man belonged. Each inventory will be endorsed, "Inventory of the effects of ——— ———, late of company (—,) ——— regiment of ———, who died at ———, the —— day of ———, 186-." If a legal representative receive the effects, it will be stated in the report. If the soldier leave no effects, the fact will be reported.

Par. 153. Should the effects of a deceased non-commissioned officer or soldier not be administered upon within a short period after his decease, they shall be disposed of by a Council of Administration, under the authority of the commanding officer of the post, and the proceeds deposited with the Paymaster, to the credit of the United States, until they shall be claimed by the legal representatives of the deceased.

Par. 154. In all such cases of sales by the Council of Administration, a statement in detail, or account of the proceeds, duly certified by the Council and commanding officer, accompanied by the Paymaster's receipt for the proceeds, will be forwarded by the commanding officer to the Adjutant General. The statement will be endorsed, "Report of the proceeds of the effects of ——— ———, late of company (—,) ——— regiment of ———, who died at ———, the —— day of ———, 186-."

NOTE 1.—The effects in all cases, when called for, should be turned over to the legal representative, without further authority from the Adjutant General. When the effects are turned over to the relatives of the deceased before these inventories are sent to the Adjutant General, their receipts therefor should be attached to the inventories. In all other cases, one copy will be sent with a letter of transmittal direct to the Adjutant General, and a duplicate retained by the officer.

NOTE 2.—Particular care should be taken to take receipts in duplicate from the Paymaster for any funds turned over to him; one copy should be sent direct to the Adjutant General and one retained by the officer.

INVENTORY OF THE EFFECTS

OF

Weston F. Stathers

Late of Company M

11 *Reg't of* U.S. C.A. (Hy)

Volunteers, who died at Camp Parapet La

on the 16" *day of* June 1863.

Inventory of the effects of Weston Fletcher late a Private of Captain H K Southwick Company M of the 11th Regiment of R.I.L.A. (Batty) Volunteers, who was enrolled as a Private at Providence in the State of Rhode Island on the 21st day of December 1863, and mustered into the service of the United States as a Private on the 25th day of January 1864, at Prov. R.I. in Company M, 11th Regiment of R.I.L.A. (Batty) Volunteers, to serve Three years or during the war; he was born in in the State of Ohio; he was 26 years of age, 5 feet 5 inches high, Dk complexion, Dk eyes, Dk hair, and by occupation, when enrolled, a Cooper; he died in Regimental Hospital, at Camp Parapet La on the 16th day of June 1865, by reason of Typhus Fever

INVENTORY.

Articles.	No.	Articles.	No.	Articles.	No.
Hats	No Effects	Pairs trowsers		Knapsacks	
Caps		Pairs flannel drawers			
Forage Caps		Pairs cotton drawers			
Great coats		Flannel shirts			
Uniform coats		Cotton shirts			
Uniform jackets		Pairs boots			
Flannel sack coats		Pairs shoes			
Blouses		Pairs socks			
Stable frocks		Blankets			
Fatigue overalls		Haversacks			

Money.		
	Specie	$
	Notes	$

I certify, on honor, that the above inventory comprises all the effects of Weston Fletcher, deceased, and that the effects are in the hands of at to be disposed of by a Council of Administration.

(DUPLICATES.)

Warren Ralph
1st Lt 11th R.I.L.A. Batty
Commanding the Company.

Station: Camp Parapet La

Date: June 22d 1865

[A. G. O. No. 104.]

ARTICLES OF WAR.

ART. 95. When any non-commissioned officer or soldier shall die, or be killed in the service of the United States, the then commanding officer of the troop or company shall, in the presence of two other commissioned officers, take an account of what effects he died possessed of, above his arms and accoutrements, and transmit the same to the office of the Department of War, which said effects are to be accounted for, and paid to the representatives of such deceased non-commissioned officer or soldier. And in case any of the officers, so authorized to take care of the effects of deceased officers and soldiers, should, before they have accounted to their representatives for the same, have occasion to leave the regiment or post, by preferment or otherwise, they shall, before they be permitted to quit the same, deposit in the hands of the commanding officer, or of the assistant military agent, all the effects of such deceased non-commissioned officers and soldiers, in order that the same may be secured for, and paid to, their respective representatives.

ARMY REGULATIONS—EDITION OF 1863.

DECEASED SOLDIERS.

Par. 152. Inventories of the effects of deceased non-commissioned officers and soldiers, required by the 95th Article of War, will be forwarded to the Adjutant General, by the commander of the company to which the deceased belonged, and a duplicate of the same to the colonel of the regiment. Final statements of pay, clothing, &c., in duplicate, will be sent to the Adjutant General with one copy of the inventory. When a soldier dies at a post or station absent from his company, it will be the duty of his immediate commander to furnish the required inventory and final statements, and, at the same time, to forward to the commanding officer of the company to which the soldier belonged, a report of his death, specifying the date, place, and cause; to what time he was last paid, and the money or other effects in his possession at the time of his decease; which report will be noted on the next muster roll of the company to which the man belonged. Each inventory will be endorsed, "Inventory of the effects of ——— ———, late of company (—,) ——— regiment of ———, who died at ———, the —— day of ———, 186–." If a legal representative receive the effects, it will be stated in the report. If the soldier leave no effects, the fact will be reported.

Par. 153. Should the effects of a deceased non-commissioned officer or soldier not be administered upon within a short period after his decease, they shall be disposed of by a Council of Administration, under the authority of the commanding officer of the post, and the proceeds deposited with the Paymaster, to the credit of the United States, until they shall be claimed by the legal representatives of the deceased.

Par. 154. In all such cases of sales by the Council of Administration, a statement in detail, or account of the proceeds, duly certified by the Council and commanding officer, accompanied by the Paymaster's receipt for the proceeds, will be forwarded by the commanding officer to the Adjutant General. The statement will be endorsed, "Report of the proceeds of the effects of ——— ———, late of company (—,) ——— regiment of ———, who died at ———, the —— day of ———, 186–."

NOTE 1.—The effects in all cases, when called for, should be turned over to the legal representative, without further authority from the Adjutant General. When the effects are turned over to the relatives of the deceased before these inventories are sent to the Adjutant General, their receipts therefor should be attached to the inventories. In all other cases, one copy will be sent with a letter of transmittal direct to the Adjutant General, and a duplicate retained by the officer.

NOTE 2.—Particular care should be taken to take receipts in duplicate from the Paymaster for any funds turned over to him; one copy should be sent direct to the Adjutant General and one retained by the officer.

JUL 8 1871 GEN'L

INVENTORY OF THE EFFECTS

OF

Watson F. Estabrook

Late of Company M

11th *Reg't of* Vt. Cav. Militia

Volunteers, who died at Camp Parapet La

on the 16th *day of* June 1865.

Inventory of the effects of Weston Fletcher late a Private of Captain Southwicks Company M of the 11th Regiment of U.S.A. Inf'y Volunteers, who was enrolled as a Private at Providence in the State of Rhode Island on the 21st day of December 1863, and mustered into the service of the United States as a Private on the 25th day of January 1864, at Prov. R.I. in Company M, 11th Regiment of U.S.A. Inf'y Volunteers, to serve Three years or during the war; he was born in _____ in the State of Ohio; he was 26 years of age, 5 feet 5 inches high, Dk complexion, Dk eyes, Dk hair, and by occupation, when enrolled, a Cooper; he died in Regimental Hospital, at Camp Parapet La on the 16 day of June 1865; by reason of Typhus Fever

INVENTORY.

Articles.	No.	Articles.	No.	Articles.	No.
Hats		Pairs trowsers		Knapsacks	
Caps	No Effects	Pairs flannel drawers			
Forage Caps		Pairs cotton drawers	No Effects		
Great coats		Flannel shirts			
Uniform coats		Cotton shirts			
Uniform jackets		Pairs boots			
Flannel sack coats		Pairs shoes			
Blouses		Pairs socks			
Stable frocks		Blankets			
Fatigue overalls		Haversacks			
				Money. Specie	$ Same
				Notes	$

I CERTIFY, ON HONOR, that the above inventory comprises all the effects of Weston Fletcher, deceased, and that the effects are in the hands of _____ at _____ to be disposed of by a Council of Administration.

(DUPLICATES.)

Warren Ralph
1st Lt 11th U.S.A. Inf'y
Commanding the Company.

STATION: Camp Parapet La

DATE: June 22nd 1865.

(A. G. O. No. 104.)

[OFFICE ENDORSEMENT.]

War Department,

ADJUTANT GENERAL'S OFFICE,

May 11, 1876.

The Death of Pvt Weston Fletcher, Co. M, 11 Reg't U. S. Colored Cav'y, is reported as follows:

On Company Muster Roll.

For May & June, 1865, June 16, 1865

Company Muster-out Roll.

June 15, 1865.

Company Descriptive Book.

....., 186

Company Morning Reports.

June 16, 1865.

Soldier's Final Statement.

....., 186

Soldier's Record of Death and Interment.

....., 186

Soldier's Inventory of Effects.

....., 186

Soldier's Certificate of Disability for Discharge.

....., 186

Soldier's Individual Muster-out Roll.

....., 186

Regimental Return.

For ....., 186 , ..., 186

Regimental Quarterly Returns.

....., 186

Regimental Descriptive Book.

....., 186

By Surgeon General.

(.....) ....., 186

June 16, 1865, is held to be the correct date, and the Company Muster Out Roll will be amended accordingly.

Thos M Vincent
Assistant Adjutant General.

C13 12 Dec Letter to 2d Auditor
116
Noted 26th
June 6 1876

Duplicate with Inventory sent 2d Auditor.

V

FINAL STATEMENT

OF

Weston Fletcher

11th Reg't of U.S. Cav'y

VOLUNTEERS.

Co. M 11th U.S. Cav'y

NOTE 1.—*Two* of these certificates (or duplicates) are to be given to each Volunteer Soldier or drafted man who may be discharged previously to the discharge of his company, that he may at once receive from the Paymaster the pay, &c., due him, and the captain or other COMMISSIONED officer commanding the company will certify to the act of the delivery of the duplicate certificates; on these certificates the Soldier is "entitled to" his *discharge*, and should also present his discharge to the Paymaster to have the payment endorsed on it. The discharge is to be given back to the Soldier by the Paymaster; the latter only retaining as his voucher the duplicate certificates.

NOTE 2.—If the Soldier is entitled to pay for the use of his horse, the Company Commander will certify to that fact on the back of both these final statements, and also to the time he has pay due for having been so mounted on his own horse.

NOTE 3.—When a Soldier is furnished with final statements, his descriptive list, if he has one, should be taken up by the officer who gives the Soldier these statements, and endorsed with a statement to this effect by the officer. This endorsement should exhibit a full statement of the time for which the Soldier was allowed pay on his final statements, the clothing account, and all other charges against him or in his favor, so as to comprise a complete exhibit of his account. It will then be transmitted to the company commander of the Soldier, who will enter all the data necessary to a full understanding of the Soldier's account on the muster roll upon which the Soldier's discharge is reported. The descriptive list will then be destroyed. The object of this is, that the remaining portion of the Soldier's account may be settled upon the receipt of these muster rolls, and the Soldier receive any pay or allowances that may be due him at the time of his discharge, and which may not appear on his final statements from the fact that his descriptive list is incomplete. These accounts for back pay, &c., are settled by the 2d Auditor of the Treasury Department.

NOTE 4.—Charges for loss or injury to ordnance, horse equipments, and other miscellaneous charges, should appear under the heading of "Other Stoppages."

NOTE 5.—Bounty paid by State authorities, and not by the United States, will not be entered on this statement.

NOTE 6.—Amounts due the Sutler and Laundress must be entered on the muster roll on which the discharge, death, desertion, &c., is reported, as well as on the final statement, otherwise the amount cannot be collected from the United States.

NOTE 7.—This blank will be used for deceased volunteers and drafted men, as well as for others.

NOTE 8.—Where a Soldier dies in Hospital or on detached service, his descriptive list, if he has one, should be sent with his final statements, in duplicate, to the Second Auditor, Washington, D. C.

FINAL STATEMENT

OF

Weston F. Fletcher

11th Reg't of N.J.C. Hdqrs

VOLUNTEERS.

Civil Last 11th 1863

NOTE 1.—*Two* of these certificates (or duplicates) are to be given to each Volunteer Soldier or drafted man who may be discharged previously to the discharge of his company, that he may at once receive from the Paymaster the pay, &c., due him, and the captain or other COMMISSIONED officer commanding the company will certify to the act of the delivery of the duplicate certificates; on these certificates the Soldier is "entitled to" his *discharge*, and should also present his discharge to the Paymaster to have the payment endorsed on it. The discharge is to be given back to the Soldier by the Paymaster; the latter only retaining as his voucher the duplicate certificates.

NOTE 2.—If the Soldier is entitled to pay for the use of his horse, the Company Commander will certify to that fact on the back of both these final statements, and also to the time he has pay due for having been so mounted on his own horse.

NOTE 3.—When a Soldier is furnished with final statements, his descriptive list, if he has one, should be taken up by the officer who gives the Soldier these statements, and endorsed with a statement to this effect by the officer. This endorsement should exhibit a full statement of the time for which the Soldier was allowed pay on his final statements, the clothing account, and all other charges against him or in his favor, so as to comprise a complete exhibit of his account. It will then be transmitted to the company commander of the Soldier, who will enter all the data necessary to a full understanding of the Soldier's account on the muster roll upon which the Soldier's discharge is reported. The descriptive list will then be destroyed. The object of this is, that the remaining portion of the Soldier's account may be settled upon the receipt of these muster rolls, and the Soldier receive any pay or allowances that may be due him at the time of his discharge, and which may not appear on his final statements from the fact that his descriptive list is incompiete. These accounts for back pay, &c., are settled by the 2d Auditor of the Treasury Department.

NOTE 4.—Charges for loss or injury to ordnance, horse equipments, and other miscellaneous charges, should appear under the heading of "Other Stoppages."

NOTE 5.—Bounty paid by State authorities, and not by the United States, will not be entered on this statement.

NOTE 6.—Amounts due the Sutler and Laundress must be entered on the muster roll on which the discharge, death, desertion, &c., is reported, as well as on the final statement, otherwise the amount cannot be collected from the United States.

NOTE 7.—This blank will be used for deceased volunteers and drafted men, as well as for others.

NOTE 8.—Where a Soldier dies in Hospital or on detached service, his descriptive list, if he has one, should be sent with his final statements, in duplicate, to the Second Auditor, Washington, D. C.

ADJUTANT GENERAL'S OFFICE.
July 7. 1865.
Duplicate with Inventory sent 2d Auditor.

I certify, on honor, that Weston Fletcher a Private of Captain Southwicke Company (M) of the 11th Regiment of U.S.C.A. (Hy) VOLUNTEERS, of the State of Rhode Island, born in ....., State of Ohio, aged 26 years; 5 feet 5 inches high; Dk complexion, Dk eyes, Dk hair, and by occupation a Cooper, having joined the company on its original organization at Providence R.I. Dec 21/61, and enrolled in it at the muster into the service of the United States at Providence R.I., on the 25th day of January, 1864, (or was mustered in service as a recruit, by ....., at ....., on the ..... day of ....., 186 , or was drafted and mustered into the service of the United States from the ..... Enrollment District of the State of ....., at ....., on the ..... day of ....., 186 ,) to serve in the Regiment, for the term of Three Years: and having served HONESTLY and FAITHFULLY with his Company in ..... to the present date, is now entitled to a DISCHARGE by reason of Death - Reported in Regtl Hospl at Camp Parapet La June 16/65 of Typhoid Fever

This Soldier owes for Knapsack 19/61

The said Weston Fletcher was last paid by Paymaster Maj Hendrickson to include the 28th day of February, 1865, and has pay due him from that time to the present date; he is entitled to pay and subsistence for TRAVELING to place of enrollment, and whatever other allowances are authorized to volunteer soldiers, drafted men, or militia, so discharged. He has received from the United States CLOTHING amounting to Ten & 89/100 dollars, since the 31st day of December, 1865, when his clothing account was last settled. He has received from the United States ..... 100 dollars advanced BOUNTY.

There is to be stopped from him, on account of the State of ....., or other authorities, for CLOTHING, &c., received on entering service, ... 100 dollars; and for other stoppages, viz: .....

Nothing

..... 100 dollars.

He has been furnished with TRANSPORTATION in kind from the place of his discharge to .....; and he has been SUBSISTED for TRAVELING to his place of enrollment, up to the ....., 186 .

He is indebted to ....., SUTLER, ... 100 dollars.

He is indebted to ....., LAUNDRESS, ... 100 dollars.

Given in Duplicate, at Camp, Parapet La, this 22 day of June, 1865.

Warren Ralph

1st Lt 11th U.S.C.A. (Hy)

Commanding Company.

A. G. O. No. 95—First.]

14
2d 2s - 1865

FINAL STATEMENT

OF

Weston F. Fletcher

11th Reg't of N. J. V. Infty

VOLUNTEERS.

NOTE 1.—*Two* of these certificates (or duplicates) are to be given to each Volunteer Soldier or drafted man who may be discharged previously to the discharge of his company, that he may at once receive from the Paymaster the pay, &c., due him, and the captain or other COMMISSIONED officer commanding the company will certify to the act of the delivery of the duplicate certificates; on these certificates the Soldier is "entitled to" his *discharge*, and should also present his discharge to the Paymaster to have the payment endorsed on it. The discharge is to be given back to the Soldier by the Paymaster; the latter only retaining as his voucher the duplicate certificates.

NOTE 2.—If the Soldier is entitled to pay for the use of his horse, the Company Commander will certify to that fact on the back of both these final statements, and also to the time he has pay due for having been so mounted on his own horse.

NOTE 3.—When a Soldier is furnished with final statements, his descriptive list, if he has one, should be taken up by the officer who gives the Soldier these statements, and endorsed with a statement to this effect by the officer. This endorsement should exhibit a full statement of the time for which the Soldier was allowed pay on his final statements, the clothing account, and all other charges against him or in his favor, so as to comprise a complete exhibit of his account. It will then be transmitted to the company commander of the Soldier, who will enter all the data necessary to a full understanding of the Soldier's account on the muster roll upon which the Soldier's discharge is reported. The descriptive list will then be destroyed. The object of this is, that the remaining portion of the Soldier's account may be settled upon the receipt of these muster rolls, and the Soldier receive any pay or allowances that may be due him at the time of his discharge, and which may not appear on his final statements from the fact that his descriptive list is incompiete. These accounts for back pay, &c., are settled by the 2d Auditor of the Treasury Department.

NOTE 4.—Charges for loss or injury to ordnance, horse equipments, and other miscellaneous charges, should appear under the heading of "Other Stoppages."

NOTE 5.—Bounty paid by State authorities, and not by the United States, will not be entered on this statement.

NOTE 6.—Amounts due the Sutler and Laundress must be entered on the muster roll on which the discharge, death, desertion, &c., is reported, as well as on the final statement, otherwise the amount cannot be collected from the United States.

NOTE 7.—This blank will be used for deceased volunteers and drafted men, as well as for others.

NOTE 8.—Where a Soldier dies in Hospital or on detached service, his descriptive list, if he has one, should be sent with his final statements, in duplicate, to the Second Auditor, Washington, D. C.

1871 JUL 6

1865

Recd R.A. 2. June 28. 1865

I certify, on honor, that Weston Fletcher a Private of Captain Southwick Company (M) of the 11" Regiment of U.S.C. Hy Artly VOLUNTEERS, of the State of Rhode Island, born in ..... State of Ohio, aged 26 years; 5 feet 5 inches high; Dk complexion, Dk eyes, Dk hair, and by occupation a Cooper, having joined the company on its original organization at Providence R.I. Dec 24/64 and enrolled in it at the muster into the service of the United States at Providence R.I., on the 25th day of January, 186 4, (or was mustered in service as a recruit, by ....., at ....., on the ..... day of ....., 186 , or was drafted and mustered into the service of the United States from the ..... Enrollment District of the State of ....., at ....., on the ..... day of ....., 186 ,) to serve in the Regiment, for the term of Three Years: and having served HONESTLY and FAITHFULLY with his Company in ..... to the present date, is now entitled to a DISCHARGE by reason of Death - Heated in Regt Hospt at Camp Parapet La June 16/65 of Typhus Fever

The said Weston Fletcher was last paid by Paymaster Maj Hendrickson to include the 28th day of February, 1865, and has pay due him from that time to the present date; he is entitled to pay and subsistence for TRAVELING to place of enrollment, and whatever other allowances are authorized to volunteer soldiers, drafted men, or militia, so discharged. He has received from the United States CLOTHING amounting to Ten & 39/100 dollars, since the 31st day of December, 1865, when his clothing account was last settled. He has received from the United States ..... 100 dollars advanced BOUNTY.

There is to be stopped from him, on account of the State of ....., or other authorities, for CLOTHING, &c., received on entering service, ... 100 dollars; and for other stoppages, viz: Nothing

..... 100 dollars.

He has been furnished with TRANSPORTATION in kind from the place of his discharge to .....; and he has been SUBSISTED for TRAVELING to his place of enrollment, up to the ....., 186 .

He is indebted to ....., SUTLER, ... 100 dollars.

He is indebted to ....., LAUNDRESS, ... 100 dollars.

Given in Duplicate, at Camp Parapet La, this 22nd day of June, 1865.

Warren Ralph
1st Lt 11th U.S.C. Hy Artly
Commanding Company.

A. G. O. No. 95—First.)

This Soldier was free April 15/65

FINAL STATEMENT

OF

Weston Hletcher

11th Reg't of U.S.A. Army

VOLUNTEERS.

NOTE 1.—*Two* of these certificates (or duplicates) are to be given to each Volunteer Soldier or drafted man who may be discharged previously to the discharge of his company, that he may at once receive from the Paymaster the pay, &c., due him, and the captain or other COMMISSIONED officer commanding the company will certify to the act of the delivery of the duplicate certificates; on these certificates the Soldier is "entitled to" his *discharge*, and should also present his discharge to the Paymaster to have the payment endorsed on it. The discharge is to be given back to the Soldier by the Paymaster; the latter only retaining as his voucher the duplicate certificates.

NOTE 2.—If the Soldier is entitled to pay for the use of his horse, the Company Commander will certify to that fact on the back of both these final statements, and also to the time he has pay due for having been so mounted on his own horse.

NOTE 3.—When a Soldier is furnished with final statements, his descriptive list, if he has one, should be taken up by the officer who gives the Soldier these statements, and endorsed with a statement to this effect by the officer. This endorsement should exhibit a full statement of the time for which the Soldier was allowed pay on his final statements, the clothing account, and all other charges against him or in his favor, so as to comprise a complete exhibit of his account. It will then be transmitted to the company commander of the Soldier, who will enter all the data necessary to a full understanding of the Soldier's account on the muster roll upon which the Soldier's discharge is reported. The descriptive list will then be destroyed. The object of this is, that the remaining portion of the Soldier's account may be settled upon the receipt of these muster rolls, and the Soldier receive any pay or allowances that may be due him at the time of his discharge, and which may not appear on his final statements from the fact that his descriptive list is incomplete. These accounts for back pay, &c., are settled by the 2d Auditor of the Treasury Department.

NOTE 4.—Charges for loss or injury to ordnance, horse equipments, and other miscellaneous charges, should appear under the heading of "Other Stoppages."

NOTE 5.—Bounty paid by State authorities, and not by the United States, will not be entered on this statement.

NOTE 6.—Amounts due the Sutler and Laundress must be entered on the muster roll on which the discharge, death, desertion, &c., is reported, as well as on the final statement, otherwise the amount cannot be collected from the United States.

NOTE 7.—This blank will be used for deceased volunteers and drafted men, as well as for others.

NOTE 8.—Where a Soldier dies in Hospital or on detached service, his descriptive list, if he has one, should be sent with his final statements, in duplicate, to the Second Auditor, Washington, D. C.

RECEIVED
JUL
8
1871

I certify, on honor, that Weston Fletcher a Private of Captain Southwicks Company (M) of the 11th Regiment of U.S.C.A. Hy VOLUNTEERS, of the State of Rhode Island, born in ....., State of Ohio, aged 26 years; 5 feet 5 inches high; Dk complexion, Dk eyes, Dk hair, and by occupation a Cooper, having joined the company on its original organization at Providence R.I. Dec 21/61, and enrolled in it at the muster into the service of the United States at Providence R.I., on the 25th day of January, 1865, (or was mustered in service as a recruit, by ....., at ....., on the ..... day of ....., 186 , or was drafted and mustered into the service of the United States from the ..... Enrollment District of the State of ....., at ....., on the ..... day of ....., 186 ,) to serve in the Regiment, for the term of Three Years: and having served HONESTLY and FAITHFULLY with his Company in ..... to the present date, is now entitled to a DISCHARGE by reason of Death - He died in Regt Hospl at Camp Parapet La June 16/65 of Typhus Fever

The said Weston Fletcher was last paid by Paymaster Maj Hendrickson to include the 28th day of February, 1865, and has pay due him from that time to the present date; he is entitled to pay and subsistence for TRAVELING to place of enrollment, and whatever other allowances are authorized to volunteer soldiers, drafted men, or militia, so discharged. He has received from the United States CLOTHING amounting to Ten & 39/100 dollars, since the 31st day of Decemb, 1865, when his clothing account was last settled. He has received from the United States ..... 100 dollars advanced BOUNTY.

There is to be stopped from him, on account of the State of ....., or other authorities, for CLOTHING, &c., received on entering service, ... 100 dollars; and for other stoppages, viz: Nothing

..... 100 dollars.

He has been furnished with TRANSPORTATION in kind from the place of his discharge to .....; and he has been SUBSISTED for TRAVELING to his place of enrollment, up to the ....., 186 .

He is indebted to ....., SUTLER, ... 100 dollars.

He is indebted to ....., LAUNDRESS, ... 100 dollars.

Given in Duplicate, at Camp Parapet La, this 22d day of June, 1865.

Warren Ralph
1st Lt 11th U.S.C.H.Hy.
Commanding Company.

A. G. O. No. 95—First.]

This soldier was born in Ohio

Retained

FINAL STATEMENT

OF

Weston Fletcher

11th Reg't of N. J. V. A. Cav'y

VOLUNTEERS.

NOTE 1.—*Two* of these certificates (or duplicates) are to be given to each Volunteer Soldier or drafted man who may be discharged previously to the discharge of his company, that he may at once receive from the Paymaster the pay, &c., due him, and the captain or other COMMISSIONED officer commanding the company will certify to the act of the delivery of the duplicate certificates; on these certificates the Soldier is "entitled to" his *discharge*, and should also present his discharge to the Paymaster to have the payment endorsed on it. The discharge is to be given back to the Soldier by the Paymaster; the latter only retaining as his voucher the duplicate certificates.

NOTE 2.—If the Soldier is entitled to pay for the use of his horse, the Company Commander will certify to that fact on the back of both these final statements, and also to the time he has pay due for having been so mounted on his own horse.

NOTE 3.—When a Soldier is furnished with final statements, his descriptive list, if he has one, should be taken up by the officer who gives the Soldier these statements, and endorsed with a statement to this effect by the officer. This endorsement should exhibit a full statement of the time for which the Soldier was allowed pay on his final statements, the clothing account, and all other charges against him or in his favor, so as to comprise a complete exhibit of his account. It will then be transmitted to the company commander of the Soldier, who will enter all the data necessary to a full understanding of the Soldier's account on the muster roll upon which the Soldier's discharge is reported. The descriptive list will then be destroyed. The object of this is, that the remaining portion of the Soldier's account may be settled upon the receipt of these muster rolls, and the Soldier receive any pay or allowances that may be due him at the time of his discharge, and which may not appear on his final statements from the fact that his descriptive list is incomplete. These accounts for back pay, &c., are settled by the 2d Auditor of the Treasury Department.

NOTE 4.—Charges for loss or injury to ordnance, horse equipments, and other miscellaneous charges, should appear under the heading of "Other Stoppages."

NOTE 5.—Bounty paid by State authorities, and not by the United States, will not be entered on this statement.

NOTE 6.—Amounts due the Sutler and Laundress must be entered on the muster roll on which the discharge, death, desertion, &c., is reported, as well as on the final statement, otherwise the amount cannot be collected from the United States.

NOTE 7.—This blank will be used for deceased volunteers and drafted men, as well as for others.

NOTE 8.—Where a Soldier dies in Hospital or on detached service, his descriptive list, if he has one, should be sent with his final statements, in duplicate, to the Second Auditor, Washington, D. C.

JUL 8 1871

I certify, on honor, that Weston F Fletcher a Private of Captain Southwicks Company (M) of the 11th Regiment of U.S.C.A. (Hy) VOLUNTEERS, of the State of Rhode Island, born in ____, State of Ohio, aged 26 years; 5 feet 5 inches high; Dark complexion, Dark eyes, Dark hair, and by occupation a Cooper, having joined the company on its original organization at Providence R.I. Dec 21/63, and enrolled in it at the muster into the service of the United States at Providence R.I., on the 25th day of January, 1864, (or was mustered in service as a recruit, by ____, at ____, on the ____ day of ____, 186 , or was drafted and mustered into the service of the United States from the ____ Enrollment District of the State of ____, at ____, on the ____ day of ____, 186 ,) to serve in the Regiment, for the term of Three Years: and having served HONESTLY and FAITHFULLY with his Company in ____ to the present date, is now entitled to a DISCHARGE by reason of Death – He Died in Regt Hospt at Camp Parapet La June 16/65 of Typhus Fever

The said Weston F Fletcher was last paid by Paymaster Maj Hurdhausen to include the 28th day of February, 1865, and has pay due him from that time to the present date; he is entitled to pay and subsistence for TRAVELING to place of enrollment, and whatever other allowances are authorized to volunteer soldiers, drafted men, or militia, so discharged. He has received from the United States CLOTHING amounting to Ten & 39/100 dollars, since the 31st day of December 1864, when his clothing account was last settled. He has received from the United States ____ 00/100 dollars advanced BOUNTY.

There is to be stopped from him, on account of the State of ____, or other authorities, for CLOTHING, &c., received on entering service, ____ 00/100 dollars; and for other stoppages, viz: Nothing

____ 00/100 dollars.

He has been furnished with TRANSPORTATION in kind from the place of his discharge to ____; and he has been SUBSISTED for TRAVELING to his place of enrollment, up to the ____, 186 .

He is indebted to ____, SUTLER, ____ 00/100 dollars.

He is indebted to ____, LAUNDRESS, ____ 00/100 dollars.

Given in Duplicate, at Camp Parapet La, this 22d day of June, 1865.

Warren Ralph
1st Lt 11 U.S.C.A. (Hy)
Commanding Company.

This Soldier was Mustered 19/1/64 Mar'd

A. G. O. No. 95—First.

63, 11 U.S.Col'd H.Art'y.

Private	Private

CARD NUMBERS.

1	6183881	26	
2	6184024	27	
3	6184172	28	
4	6184315	29	
5	6184454	30	
6	6184590	31	
7	6184720	32	
8	6184847	33	
9	6184963	34	
10	6185078	35	
11	6185189	36	
12	6185297	37	
13	6185406	38	1
14	9124271	39	
15	9124130	40	
16		41	
17		42	
18		43	
19		44	
20		45	
21		46	
22		47	
23		48	
24		49	
25		50	

Book Mark:

See also

Rap 386278 - Commo to D.
D. 14 2 1845 - P.O. rets

J. D. Mark Esq.

I | 11 H. Art'y. | U.S.C.T.

John Ford

, Co. B, 11 Reg't U. S. Col'd H. Art'y.

Appears on

Company Descriptive Book

of the organization named above.

DESCRIPTION.

Age 25 years; height 5 feet 9 inches.

Complexion Dark

Eyes Dark; hair Dark

Where born Alexander Va

Occupation Cook

ENLISTMENT.

When Aug 21, 1863.

Where Prov R I

By whom Maj Sanford; term 3 y'rs.

Remarks:

Same

(3850) *Copyist.*

F | 11 H. Art'y. | U.S.C.T.

John Ford

_____, Co. B, 11 Reg't U. S. Col'd H. Art'y.

Appears on

Company Descriptive Book

of the organization named above.

DESCRIPTION.

Age 25 years; height 5 feet 9 inches.

Complexion Dark

Eyes Dark; hair Dark

Where born Alexandria Va

Occupation Cook

ENLISTMENT.

When Aug 21, 186 .

Where Providence

By whom Maj Sanford; term 3 y'rs.

Remarks:

Sam'l

(383y) Copyist.

H | 11 H. Art'y. | U.S.C.T.

John Ford

Pvt., Co. B, 14 Reg't R. I. Col'd H. Art'y.*

Age 25 years.

Appears on

Company Muster-in Roll

of the organization named above. Roll dated Providence R.I. Sept 14, 1863.

Muster-in to date Sept 14, 1863.

Joined for duty and enrolled:

When Aug. 21, 186 .

Where Providence

Period 3 years.

Valuation of horse, $ 100

Valuation of horse equipments, $ 100

Remarks:

* This organization subsequently became Co. B, 11 Reg't U. S. Colored Heavy Artillery.

Book mark:

J. Walker

(356) *Copyist.*

J | 11 H. Art'y. | U.S.C.T.

John Ford

Pvt., Co. B, 14 Reg't R. I. Col'd H. Art'y.*

Appears on

Company Muster Roll

for Sept 14 to Dec 31, 186 3.

Present or absent Present

Stoppage, $.....100 for .....

.....

Due Gov't, $.....100 for .....

.....

Valuation of horse, $.....100

Valuation of horse equipments, $.....100

Remarks:.....

.....

.....

.....

.....

.....

.....

*This organization subsequently became Co. B, 11 Reg't U. S. Colored Heavy Artillery.

Book mark:.....

J. Wacker

(358) *Copyist.*

A. | 11 H. Art'y. | U.S.C.T.

John Ford

Pvt., Co. B, 14 Reg't R. I. Col'd H. Art'y.*

Appears on

Company Muster Roll

for Jan & Feb, 1864.

Present or absent Present

Stoppage, $ 100 for

Due Gov't, $ 100 for

Valuation of horse, $ 100

Valuation of horse equipments, $ 100

Remarks:

*This organization subsequently became Co. B, 11 Reg't U. S. Colored Heavy Artillery.

Book mark:

J. Walker

(358) *Copyist.*

J | 11 H. Art'y. | U.S.C.T.

John Ford

Pvt., Co. B, 8 Reg't U. S. Col'd H. Art'y.*

Appears on

Company Muster Roll

for Mch & Apl, 1864.

Present or absent Present

Stoppage, $ 100 for

Due Gov't, $ 100 for

Valuation of horse, $ 100

Valuation of horse equipments, $ 100

Remarks:

† This organization subsequently became Co. B, 11 Reg't U. S. Colored Heavy Artillery.

Book mark:

J. Walker

(358) *Copyist.*

I | 11 H. Art'y. | U.S.C.T.

John Ford

Pvt., Co. B, 8 Reg't U. S. Col'd H. Art'y.*

Appears on

Company Muster Roll

for May & June, 1864.

Present or absent Present

Stoppage, $ 100 for

Due Gov't, $ 100 for

Valuation of horse, $ 100

Valuation of horse equipments, $ 100

Remarks:

† This organization subsequently became Co. B, 11 Reg't U. S. Colored Heavy Artillery.

Book mark:

J. Walker

(358) *Copyist.*

J. | 11 H. Art'y. | U.S.C.T.

John Ford

Pri., Co. B, 11 Reg't U. S. Col'd H. Art'y.

Appears on

Company Muster Roll

for July & Aug, 1864

Present or absent Present

Stoppage, $ 100 for

Due Gov't, $ 100 for

Valuation of horse, $ 100

Valuation of horse equipments, $ 100

Remarks: Free Apr 19/61

Book mark:

D. Munroe

(358) Copyist.

F | 11 H. Art'y. | U.S.C.T.

John Ford

Jr, Co. B, 11 Reg't U. S. Col'd H. Art'y.

Appears on

Company Muster Roll

for Sept & Oct, 1864.

Present or absent Present

Stoppage, $ 100 for

Due Gov't, $ 100 for

Valuation of horse, $ 100

Valuation of horse equipments, $ 100

Remarks:

Book mark:

D. W. Moore

(358) *Copyist.*

I. | **11** H. Art'y. | **U.S.C.T.**

John Ford

Pri, Co. B, 11 Reg't U. S. Col'd H. Art'y.

Appears on

Company Muster Roll

for *Nov & Dec*, 186*4*.

Present or absent *Present*

Stoppage, $ ---- 100 for ----

Due Gov't, $ ---- 100 for ----

Valuation of horse, $ ---- 100

Valuation of horse equipments, $ ---- 100

Remarks: ----

Book mark: ----

B. W. Moore

(358) ***Copyist.***

Jr | **11** H. Art'y. | **U.S.C.T.**

John Ford

Jr, Co. B, 11 Reg't U. S. Col'd H. Art'y.

Appears on

Company Muster Roll

for Jan & Feb, 186 5.

Present or absent Present

Stoppage, $ 100 for

Due Gov't, $ 100 for

Valuation of horse, $ 100

Valuation of horse equipments, $ 100

Remarks:

Book mark:

O. M. Moore

(358) *Copyist.*

J. | 11 H. Art'y. | U.S.C.T.

John Ford

Ri, Co. B, 11 Reg't U. S. Col'd H. Art'y.

Appears on

Company Muster Roll

for Nov & Dec, 186 J.

Present or absent Present

Stoppage, $ 100 for

Due Gov't, $ 100 for

Valuation of horse, $ 100

Valuation of horse equipments, $ 100

Remarks:

Book mark:

D. H. Munroe

(358) *Copyist.*

F 11 H. Art'y. | U.S.C.T.

John Ford

Sgt.; Co. B, 11 Reg't U. S. Col'd H. Art'y.

Appears on

Company Muster Roll

for May & June, 1865.

Present or absent Present

Stoppage, $ 100 for

Due Gov't, $ 100 for

Valuation of horse, $ 100

Valuation of horse equipments, $ 100

Remarks:

Book mark:

(358) Hamberger *Copyist.*

E | 11 H. Art'y. | U.S.C.T.

Joseph Frol

Pvt., Co. B, 11 Reg't U. S. Col'd H. Art'y.

Appears on

Company Muster Roll

for July & Aug, 1865

Present or absent Present

Stoppage, $ 100 for

Due Gov't, $ 100 for

Valuation of horse, $ 100

Valuation of horse equipments, $ 100

Remarks:

Book mark:

(358) Hoyberger Copyist.

F | 11 H. Art'y. | U.S.C.T.

John Fox

Pvt., Co. B, 11 Reg't U. S. Col'd H. Art'y.

Appears on **Co. Muster-out Roll,** dated

New Orleans La, Oct 2, 1865.

Muster-out to date Oct. 2, 1865.

Last paid to Feb 28, 1865.

Clothing account:

Last settled ....., 186 ; drawn since $ 100

Due soldier $ 18 37/100; due U. S. $ 100

Am't for cloth'g in kind or money adv'd $ 100

Due U. S. for arms, equipments, &c., $ 00 12/100

Bounty paid $ None 100; due $ 100 00/100

Remarks: Joined org'l org'n

Stop'd eagle, 5 numbers,

letter and 2 Impressions

Lost

Book mark: .....

---

(361) Copyist.

Co. B

CARD NUMBERS.

1	6 2 0 0 1 0 9 0
2	6 2 0 0 1 9 9 8 3
3	6 2 0 0 2 0 5 4
4	6 2 0 0 2 0 1 6 7
5	6 2 0 0 2 3 0 8
6	6 2 0 0 4 4 6
7	6 2 0 0 5 7 6
8	6 2 0 0 7 0 9
9	6 2 0 0 8 3 9
10	6 2 0 0 9 6 5
11	6 2 0 1 0 9 1
12	6 2 0 1 2 0 4
13	9 1 2 5 7 8 7
14	
15	
16	
17	
18	
19	
20	
21	
22	
23	
24	
25	
26	
27	
28	
29	
30	
31	
32	
33	
34	
35	
36	
37	
38	
39	
40	
41	
42	
43	
44	
45	
46	
47	
48	
49	
50	

Book No. 1

F. | 11 H. Art'y. | U.S.C.T.

Moses Foskey

, Co. L, 11 Reg't U. S. Col'd H. Art'y.

Appears on

Company Descriptive Book

of the organization named above.

DESCRIPTION.

Age 38 years; height 5 feet 9 inches.

Complexion African

Eyes Blk; hair Blk

Where born Washington D. C.

Occupation Driver

ENLISTMENT.

When Dec 23, 1863.

Where Prov R. I.

By whom J. McEnaly; term 3 y'rs.

Remarks: Appointed Corporal June 15, 1864 by order of Lt Col Nelson Viall Comdg Regt Mustered out Oct 21 1865

Griffith

(3330) Copyist.

H | 11 | 11 C. | **U.S.C.T.**

Moses Parker

Pvt, Co. 4th R.I. Col'd H.A., 11 Reg't U. S. Col'd H. A.

Age 23 years.

Appears on a

Detachment Muster-in Roll

of the organization named above. Roll dated

Providence R.I., Feb 29, 1864.

Muster-in to date Feb 11, 1864

Joined for duty and enrolled:

When Dec 23, 1863.

Where Providence R.I.

Period 3 years.

Valuation of horse, $ 100

Valuation of horse equipments, $ 100

Remarks: Mustered in
Feb 11/64

Book mark:

O M Jackson
Copyist.

11 H. Art'y. | U.S.C.T.

Moses Braskey

pvt., Co. L, 14 Reg't R. I. Col'd H. Art'y.*

Appears on

Company Muster Roll

for Jan & Feb, 1864.

Present or absent Present

Stoppage, $.....100 for .....

.....

.....

Due Gov't, $.....100 for .....

.....

Valuation of horse, $.....100

Valuation of horse equipments, $.....100

Remarks: Recruits for 2d Battalion Attached

.....

.....

.....

.....

.....

.....

* This organization subsequently became Co. L, 11 Reg't U. S. Colored Heavy Artillery.

Book mark: .....

(358) R. B. Edwards
Copyist.

F. | 11 H. Art'y. | U.S.C.T.

Moses Forskey

Pvt., Co. L, 14 Reg't R. I. Col'd H. Art'y.*

Appears on

Company Muster Roll

for Mar. & Apr., 1864.

Present or absent Present

Stoppage, $.....100 for .....

Due Gov't, $.....100 for .....

Valuation of horse, $.....100

Valuation of horse equipments, $.....100

Remarks: assigned to Co. Apr 25/64 by S.O No 9. from Regtl Hd. Qrs.

* This organization subsequently became Co. L, 11 Reg't U. S. Colored Heavy Artillery.

Book mark: .....

J Mawkey

(358) *Copyist.*

1st | 11 H. Art'y. | U.S.C.T.

Moses Corskey

Corpl, Co. C, 8 Reg't U. S. Col'd H. Art'y.*

Appears on

Company Muster Roll

for May & June, 1864.

Present or absent Present

Stoppage, $ 100 for

Due Gov't, $ 100 for

Valuation of horse, $ 100

Valuation of horse equipments, $ 100

Remarks: Appointed Corpl June 13—1864 by order of Lt Col Nelson Viall

†This organization subsequently became Co. L, 11 Reg't U. S. Colored Heavy Artillery.

Book mark:

(358)

W. L. Edwards

Copyist.

F. | 11 H. Art'y. | U.S.C.T.

Moses Fosky

Corp, Co. L, 11 Reg't U. S. Col'd H. Art'y.

Appears on

Company Muster Roll

for July & Aug, 1864.

Present or absent Present

Stoppage, $ 100 for

Due Gov't, $ 100 for

Valuation of horse, $ 100

Valuation of horse equipments, $ 100

Remarks: Appointed Corp. by order of Nelson Crail Lt. Col. Comdg. June 15/64. Pay on Apr. 19, 1861 $16 per month back pay due from enlistment to Apr. 30/64

Book mark:

Mark Ley

(358) Copyist.

F. | 11 H. Art'y. | U.S.C.T.

Moses Foskey.

Corpl., Co. L, 11 Reg't U. S. Col'd H. Art'y.

Appears on

Company Muster Roll

for Sept & Oct, 1864

Present or absent present.

Stoppage, $ 100 for

Due Gov't, $ 100 for

Valuation of horse, $ 100

Valuation of horse equipments, $ 100

Remarks: Appointed Corpl. by order of Lt. Col. Viall, June 15/64.
$6.00 pro month back pay due from enlistment to April 30/64.
Free on April 19/61.

Book mark:

Baker,
Copyist.

F. | 11 H. Art'y. | U.S.C.T.

Moses Fookey.

Corpl, Co. L, 11 Reg't U. S. Col'd H. Art'y.

Appears on

Company Muster Roll

for Nov. & Dec., 1864.

Present or absent present.

Stoppage, $ 100 for

Due Gov't, $ 100 for

Valuation of horse, $ 100

Valuation of horse equipments, $ 100

Remarks: Appointed Corporal by order of Lt. Col. Viall, June 15/64.

Book mark:

Baker,
Copyist.

F. | 11 H. Art'y. | U.S.C.T.

Moses Foskey.

Corpl, Co. L, 11 Reg't U. S. Col'd H. Art'y.

Appears on

Company Muster Roll

for Jan & ×~~Dec~~ Feby 1865.

Present or absent present.

Stoppage, $ 100 for

Due Gov't, $ 100 for

Valuation of horse, $ 100

Valuation of horse equipments, $ 100

Remarks:

×Corrected by Ext.

Book mark:

Baker,
Copyist.

F. | 11 H. Art'y. | U.S.C.T.

Moses Foskey.

Corpl, Co. L, 11 Reg't U. S. Col'd H. Art'y.

Appears on

Company Muster Roll

for March & April, 1865.

Present or absent present.

Stoppage, $ 100 for

Due Gov't, $ 100 for

Valuation of horse, $ 100

Valuation of horse equipments, $ 100

Remarks:

Book mark:

Baker
Copyist.

F | 11 H. Art'y. | U.S.C.T.

Moses Foskey

Corpl., Co. L, 11 Reg't U. S. Col'd H. Art'y.

Appears on

Company Muster Roll

for May & June, 1865.

Present or absent Present

Stoppage, $ 100 for

Due Gov't, $ 100 for

Valuation of horse, $ 100

Valuation of horse equipments, $ 100

Remarks:

Book mark:

(358) Murphy Copyist.

F. | 11 H. Art'y. | U.S.C.T.

Moses Foskey

Corpl, Co. L, 11 Reg't U. S. Col'd H. Art'y.

Appears on

Company Muster Roll

for July & Aug, 1865.

Present or absent Present

Stoppage, $ 100 for

Due Gov't, $ 100 for

Valuation of horse, $ 100

Valuation of horse equipments, $ 100

Remarks:

Book mark:

Murphy

(358) Copyist.

F | 11 H. Art'y. | U.S.C.T.

Moses Foskey

Corpl., Co. L, 11 Reg't U. S. Col'd H. Art'y.

Appears on Co. Muster-out Roll, dated New Orleans La., Oct 2, 1865.

Muster-out to date Oct 2, 1865.

Last paid to Feb 28, 1865.

Clothing account:

Last settled ....., 186 ; drawn since $ 100

Due soldier $ 18 62/100; due U. S. $ 100

Am't for cloth'g in kind or money adv'd $ 100

Due U. S. for arms, equipments, &c., $ 100

Bounty paid $ ..... 100; due $ 100 00/100

Remarks: Joined at original organization Prior to June 15/64 Stoppage for 1 Musket & accts retained $6.00

Book mark: V. 66, P. 62-69

Murphy

(361) *Copyist.*

Farley Moore

P., Co. L, 11 Reg't Mass'd

2 Enclosures.

Bed Cards	Final Statements
Burial Records	Furloughs or L. of A.
Certs. of Dis. for Discharge	Med. Certificates
C. M. Charges	Med. Des. Lists
Descriptive Lists	Orders
Discharge Certificates	Pris. of War Record
Enlistment Papers 1	Resignations

Other papers relating to—

Admission to Hosp'l	Furlough or L. of A.
Casualty Sheet	Med. Examination
Confinement	Misc. Information
Contracts	Pay or Clothing 1
Death or Effects	Personal Reports
Desertion	Rank
Discharge from Hosp'l	Transfer to Hosp'l
Discharge from Service	Transfer to V. R. C.
Duty	Transportation

MICROFILM PUBLICATION M 1832

COMPILED MILITARY SERVICE RECORDS
OF VOLUNTEER UNION SOLDIERS WHO SERVED WITH
THE UNITED STATES COLORED TROOPS (USCT)
11TH REGIMENT OF HEAVY ARTILLERY

PERSONAL PAPERS' TARGET SHEET

PLEASE NOTE THE CHECKED INFORMATION ABOUT THE PERSONAL PAPERS IN THIS FILE:

☐ NO PERSONAL PAPERS WERE FOUND IN THIS FILE WHEN THE RECORDS WERE ARRANGED FOR MICROFILMING.

☒ 3 PERSONAL PAPER(S) FOUND IN THIS FILE WHEN THE RECORDS WERE ARRANGED FOR MICROFILMING.

DECLARATION OF RECRUIT.

I, Moses Foster desiring to VOLUNTEER as a Soldier in the *ARMY OF THE UNITED STATES*, for the term of Three Years do declare that I am Twenty eight years and months of age; that I have never been discharged from the United States service on account of disability or by sentence of a court martial, or by order, before the expiration of a term of enlistment; and I know of no impediment to my serving honestly and faithfully as a soldier for Three Years

Given at Providence R. I.

The Twenty third day of December 18 62

Witness:

Geo F Sonney

Moses Foskey

11 USC 433

No. 24

Moses Foskey

Volunteered at Providence R.I.

23 d December

1862

By Maj Gen Burnside

Regiment of Cav

enlistment; last served in Company ( ) [illegible]

Reg't of

Discharged

18

CONSENT IN CASE OF MINOR.

I, Do Certify that I am the ; that the said of is years of age; and I do hereby freely give my CONSENT to his volunteering as a SOLDIER in the ARMY OF THE UNITED STATES for the period of

Given at

The day of

Witness:

VOLUNTEER ENLISTMENT.

State of Rhode Island Town of Providence

I, Moses Foskey born in Washington

in the State of District of Columbia aged Thirty eight years, and by occupation a Driver DO HEREBY ACKNOWLEDGE to have volunteered this Twenty third day of December 1862 to serve as a SOLDIER in the ARMY OF THE UNITED STATES OF AMERICA, for the period of Three years, unless sooner discharged by proper authority: Do also agree to accept such bounty, pay, rations and clothing, as are, or may be, established, by law for volunteers. And I, Moses Foskey do solemnly swear, that I will bear true faith and allegiance to the *United States of America*, and that I will serve them honestly and faithfully against all their enemies or opposers whomsoever; and that I will observe and obey the orders of the President of the United States, and the orders of the officers appointed over me, according to the Rules and Articles of War.

Sworn and Subscribed to, at Providence R.I. this Twenty third day of December 1862 Before me John L. Boyd Public Notary

Moses Foskey

I CERTIFY, ON HONOR, That I have carefully examined the above-named Volunteer, agreeable to the General Regulations of the Army, and that, in my opinion, he is free from all bodily defects and mental infirmity, which would, in any way, disqualify him from performing the duties of a soldier.

Johnson Gardner M.D.

EXAMINING SURGEON.

I CERTIFY, ON HONOR, That I have minutely inspected the Volunteer, Moses Foskey previously to his enlistment, and that he was entirely sober when enlisted; that to the best of my judgment and belief, he is of lawful age; and that, in accepting him as duly qualified to perform the duties of an able-bodied soldier, I have strictly observed the Regulations which govern the recruiting service. This soldier has Dark eyes Dark hair complexion, is 5 feet, 9 inches high.

Boyd

Regiment of R. I. H. A. Volunteers,

RECRUITING OFFICE[redacted]

DECLARATION OF RECRUIT.

I, Peter Foley desiring to VOLUNTEER as a Soldier in the *ARMY OF THE UNITED STATES*, for the term of Three Years do declare that I am Thirty eight years and months of age; that I have never been discharged from the United States service on account of disability or by sentence of a court martial, or by order, before the expiration of a term of enlistment; and I know of no impediment to my serving honestly and faithfully as a soldier for Three Years.

Given at Providence R. I.

The Twenty third day of December 1863

Witness:

Geo. T. Sweeney

Peter Foley

No. Peter Foley

Volunteered at Providence

23 December

By Maj. Gen. Burnside

4th Regiment of Artillery

enlistment; last served in Co. ( ) *Company*

Reg't of

Discharged 18 186 3

CONSENT IN CASE OF MINOR.

I, Do Certify that I am the

of ; that the said

is years of age; and I do hereby freely give

my CONSENT to his volunteering as a SOLDIER in the ARMY OF THE UNITED STATES for the period of .

Given at

The day of

Witness:

VOLUNTEER ENLISTMENT.

State of Rhode Island Town of Providence

I, Moses Foskey born in Washington

in the ~~State of~~ District of Columbia aged Thirty eight years, and by occupation a Boy

DO HEREBY ACKNOWLEDGE to have volunteered this Twenty third day of December 1863 to serve as a SOLDIER in the ARMY OF THE UNITED STATES OF AMERICA, for the period of Three Years, unless sooner discharged by proper authority: Do also agree to accept such bounty, pay, rations and clothing, as are, or may be, established, by law for volunteers. And I, Moses Foskey do solemnly swear, that I will bear true faith and allegiance to the *United States of America*, and that I will serve them honestly and faithfully against all their enemies or opposers whomsoever; and that I will observe and obey the orders of the President of the United States, and the orders of the officers appointed over me, according to the Rules and Articles of War.

Sworn and Subscribed to, at Providence R. I.

this Twenty third day of December 1863

BEFORE Me John L. Arnold Public Notary

Moses Foskey

I CERTIFY, ON HONOR, That I have carefully examined the above-named Volunteer, agreeable to the General Regulations of the Army, and that, in my opinion, he is free from all bodily defects and mental infirmity, which would, in any way, disqualify him from performing the duties of a soldier.

John Longstreet M D

EXAMINING SURGEON.

I CERTIFY, ON HONOR, That I have minutely inspected the Volunteer, Moses Foskey previously to his enlistment, and that he was entirely sober when enlisted; that to the best of my judgment and belief, he is of lawful age; and that, in accepting him as duly qualified to perform the duties of an able-bodied soldier, I have strictly observed the Regulations which govern the recruiting service. This soldier has Blue eyes dark hair *hair* Black *complexion*, is 5 *feet*, 9 *inches high.*

Maj 14th Regiment R. I. H. A. Volunteers,

RECRUITING OFFICER.

Statement of

Moses Yoakey

Co. L.

14th Regt- R. I. H. Arty.

11 U. S. C. T.

Camp Bailey Dutch Island R I.
March 14 1864.

I certify that I have had no bounty whatever from ~~some~~ unknown cause

Witness —
Charles M Smith 2d Lt
14th Regt R I H. Art'y.

Joseph Hoskey

[illegible], 1st U.S. Col'd H. Art'y.

[illegible]	Private

CARD NUMBERS.

1 6 1 8 3 8 8 1	26
2 6 1 8 4 0 2 5	27
3 6 1 8 4 1 7 3	28
4 6 1 8 4 3 1 6	29
5 6 1 8 4 4 5 5	30
6 6 1 8 4 5 9 1	31
7 6 1 8 4 7 9 3	32
8 6 1 8 1 7 8 1	33
9 6 1 8 5 5 0 4	34
10 9 1 2 4 1 3 1	35
11 9 1 2 4 2 7 2	36
12	37
13	38
14	39
15	40
16	41
17	42
18	43
19	44
20	45
21	46
22	47
23	48
24	49
25	50

Book Mark:

Received

I | 11 H. Art'y. | U.S.C.T.

Nathaniel Forrest

....., Co. B, 11 Reg't U. S. Col'd H. Art'y.

Appears on

Company Descriptive Book

of the organization named above.

DESCRIPTION.

Age 26 years; height 5 feet 2 inches.

Complexion Dk

Eyes Blk; hair Blk

Where born Washington D C

Occupation Waiter

ENLISTMENT.

When Aug 19, 186 .

Where Providence

By whom Wm H Helme; term 3 y'rs.

Remarks: Deserted at N. O La Sept 29/64. Description sent to the O. M. Gen Oct 7/64.

James

(383y) Copyist.

7 | 11 H. Art'y. | U.S.C.T.

Nathaniel Forest

, Co. B, 11 Reg't U. S. Col'd H. Art'y.

Appears on

Company Descriptive Book

of the organization named above.

DESCRIPTION.

Age 26 years; height 5 feet 2 inches.

Complexion Dk

Eyes Blk; hair Blk

Where born Northampton Co

Occupation Miller

ENLISTMENT.

When Aug 19, 1863.

Where Prov R I

By whom Wm H Helme; term 3 y'rs.

Remarks: Deserted at N Orleans La Sept 29/64 Descriptive list sent to P. M. Gen Oct 7. 64

James

(3834) Copyist.

H | 11 H. Art'y. | U.S.C.T.

Nathaniel Forrest

Pvt., Co. B, 14 Reg't R. I. Col'd H. Art'y.*

Age 26 years.

Appears on

Company Muster-in Roll

of the organization named above. Roll dated Providence R.I. Sept 14, 1863.

Muster-in to date Sept 14, 1863.

Joined for duty and enrolled:

When Aug 19, 186 .

Where Providence

Period 3 years.

Valuation of horse, $ 100

Valuation of horse equipments, $ 100

Remarks:

* This organization subsequently became Co. B, 11 Reg't U. S. Colored Heavy Artillery.

Book mark:

J. Wallace

Copyist.

J. | 11 H. Art'y. | U.S.C.T.

Nathaniel Forest

Pvt., Co. B, 14 Reg't R. I. Col'd H. Art'y.*

Appears on

Company Muster Roll

for Sept 14 to Dec 31, 1863.

Present or absent Present

Stoppage, $ 100 for

Due Gov't, $ 100 for

Valuation of horse, $ 100

Valuation of horse equipments, $ 100

Remarks:

*This organization subsequently became Co. B, 11 Reg't U. S. Colored Heavy Artillery.

Book mark:

J. Waeker

(358) *Copyist.*

H. | 11 H. Art'y. | U.S.C.T.

Nathaniel Forest

Pvt., Co. B, 14 Reg't R. I. Col'd H. Art'y.*

Appears on

Company Muster Roll

for Jan & Feb, 1864.

Present or absent Present

Stoppage, $ 100 for

Due Gov't, $ 100 for

Valuation of horse, $ 100

Valuation of horse equipments, $ 100

Remarks:

*This organization subsequently became Co. B, 11 Reg't U. S. Colored Heavy Artillery.

Book mark:

J. Waeker

(358) *Copyist.*

I | 11 H. Art'y. | U.S.C.T.

Nathaniel Forrest

Pvt., Co. B, 8 Reg't U. S. Col'd H. Art'y.*

Appears on

Company Muster Roll

for M & A ..., 1864.

Present or absent Present.

Stoppage, $ 100 for

Due Gov't, $ 100 for

Valuation of horse, $ 100

Valuation of horse equipments, $ 100

Remarks:

*This organization subsequently became Co. D, 11 Reg't U. S. Colored Heavy Artillery.

Book mark:

J. Walker

(358) Copyist.

J | 11 H. Art'y. | U.S.C.T.

Nathaniel Forrest

Pvt., Co. B, 8 Reg't U. S. Col'd H. Art'y.*

Appears on

Company Muster Roll

for May & June, 1864.

Present or absent Present

Stoppage, $ 100 for

Due Gov't, $ 100 for

Valuation of horse, $ 100

Valuation of horse equipments, $ 100

Remarks:

† This organization subsequently became Co. B, 11 Reg't U. S. Colored Heavy Artillery.

Book mark:

J. Walker

(358) *Copyist.*

F | 11 H. Art'y. | U.S.C.T.

Nathaniel Forrest

Pri, Co. B, 11 Reg't U. S. Col'd H. Art'y.

Appears on

Company Muster Roll

for July & Aug, 1864.

Present or absent Present

Stoppage, $ 100 for

Due Gov't, $ 100 for

Valuation of horse, $ 100

Valuation of horse equipments, $ 100

Remarks: Free Apr 19/61

Book mark:

O. W. Meese

(358) *Copyist.*

J. | 11 H. Art'y. | U.S.C.T.

Nathaniel Foust

Pvt, Co. B, 11 Reg't U. S. Col'd H. Art'y.

Appears on

Company Muster Roll

for Sept & Oct, 1864.

Present or absent.....

Stoppage, $.....100 for .....

.....

Due Gov't, $.....100 for .....

.....

Valuation of horse, $.....100

Valuation of horse equipments, $.....100

Remarks: Absented

.....

.....

.....

.....

.....

.....

.....

.....

Book mark: .....

.....

E. H. Devore

(358) *Copyist.*

I. | 11th Art'y. | **U.S.C.T.**

Nathaniel Forrest

Priv., Co. D, 11 Reg't U. S. Col'd H. Art'y.

Appears on

Descriptive List of Deserters

dated Nov. 10, 1864.

Deserted:

When Oct. 4, 1864.

Where New Orleans.

Arrested:

When ....., 186 .

Where .....

Remarks: .....

Book mark: .....

H. O'Gilbert,

(351) *Copyist.*

F | 11 H. Art'y. | U.S.C.T.

Nathaniel Forrest

Pvt., Co. B, 11 Reg't U. S. Col'd H. Art'y.

Appears on **Co. Muster-out Roll,** dated New Orleans La., Oct. 2, 1865.

Muster-out to date ....., 186 .

Last paid to ....., 186 .

Clothing account:

Last settled....., 186 ; drawn since $.....100

Due soldier $.....100 ; due U. S. $.....100

Am't for cloth'g in kind or money adv'd $.....100

Due U. S. for arms, equipments, &c., $ 100

Bounty paid $.....100 ; due $.....100

Remarks: Joined org'd org'n
Deserted at New Orleans
La. Sept. 29/64

Book mark: .....

---

(361) Hoyberger *Copyist.*

Fortune, Sr

Co E, 11 U.S.Col'd H.Art'y.

Private	Private

CARD NUMBERS.

1 6189355	26
2 6189083	27
3 6189280	28
4 6189375	29
5 6189519	30
6 6189666	31
7 6189802	32
8 6189981	33
9 6190057	34
10 6190189	35
11 6190319	36
12 6190450	37
13 6190577	38
14 9124886	39
15	40
16	41
17	42
18	43
19	44
20	45
21	46
22	47
23	48
24	49
25	50

Book Mark:

See also

F | 11 H. Art'y. | U.S.C.T.

John Fortune

, Co. E, 11 Reg't U. S. Col'd H. Art'y.

Appears on

Company Descriptive Book

of the organization named above.

DESCRIPTION.

Age 18 years; height 5 feet 4 inches.

Complexion Dk.

Eyes Dk.; hair Dk.

Where born Africa.

Occupation Farmer.

ENLISTMENT.

When Sept. 28, 1863.

Where Prov., R. I.

By whom J. C. Whitney, Jr.; term 3 y'rs.

Remarks:

O. L. Markle,

(383y) *Copyist.*

F | 11 H. Art'y. | U.S.C.T.

John Fortune

Pvt., Co. E, 14 Reg't R. I. Col'd H. Art'y.*

Age 18 years.

Appears on

Company Muster-in Roll

of the organization named above. Roll dated Providence, R. I., Oct. 5, 1863.

Muster-in to date Oct. 5, 1863.

Joined for duty and enrolled:

When Oct. 28, 186 .

Where Prov., R. I.

Period 3 years.

Valuation of horse, $ 100

Valuation of horse equipments, $ 100

Remarks: Prov., R. I., 1 dist.

* This organization subsequently became Co. E, 11 Reg't U. S. Colored Heavy Artillery.

Book mark:

C Chandler

(356) Copyist.

F | 11 H. Art'y. | U.S.C.T.

John Fortune

Pvt., Co. E, 14 Reg't R. I. Col'd H. Art'y.*

Appears on

Company Muster Roll

for Oct. 6 to Dec. 31, 1863.

Present or absent Present

Stoppage, $ 100 for

Due Gov't, $ 100 for

Valuation of horse, $ 100

Valuation of horse equipments, $ 100

Remarks:

*This organization subsequently became Co. E, 11 Reg't U. S. Col'd Heavy Artillery.

Book mark:

C. Chandler

(358) *Copyist.*

F | 11 H. Art'y. | U.S.C.T.

John Fortune

Pvt., Co. E, 14 Reg't R. I. Col'd H. Art'y.*

Appears on

Company Muster Roll

for Jan. & Feb., 1864.

Present or absent Present

Stoppage, $ 100 for

Due Gov't, $ 100 for

Valuation of horse, $ 100

Valuation of horse equipments, $ 100

Remarks: Due Laundress $.75

*This organization subsequently became Co. E, 11 Reg't U. S. Col'd Heavy Artillery.

Book mark:

C Chandler

(358) Copyist.

F | 11 H. Art'y. | U.S.C.T.

John Fortune

Pvt., Co. E, 14 Reg't R. I. Col'd H. Art'y.*

Appears on

Company Muster Roll

for Mch. & April, 1864.

Present or absent Present

Stoppage, $ 100 for

Due Gov't, $ 100 for

Valuation of horse, $ 100

Valuation of horse equipments, $ 100

Remarks: Due Laundress 75

*This organization subsequently became Co. E, 11 Reg't U. S. Col'd Heavy Artillery.

Book mark:

C Chandler

Copyist.

F | 11 H. Art'y. | U.S.C.T.

John Fortune

Pvt., Co. E, 8 Reg't U. S. Col'd H. Art'y.*

Appears on

Company Muster Roll

for May & June, 1864.

Present or absent Present

Stoppage, $ 100 for

Due Gov't, $ 100 for

Valuation of horse, $ 100

Valuation of horse equipments, $ 100

Remarks: Due Laundress .75

*This organization subsequently became Co. E, 11 Reg't U. S. Colored Heavy Artillery.

Book mark:

L Chandler

F | 11 H. Art'y. | U.S.C.T.

Edw. Fortune

Pvt., Co. E, 11 Reg't U. S. Col'd H. Art'y.

Appears on

Company Muster Roll

for Aug. & Oct., 186x.

Present or absent Present

Stoppage, $ 100 for

Due Gov't, $ 100 for

Valuation of horse, $ 100

Valuation of horse equipments, $ 100

Remarks: Enl. Sept. 9 - 1863

+ ~~Returned from Hospital~~

~~Joined Co. Sept 1 - 1864~~ +

* Is on roll.

Book mark;

Pathaway

(358) Copyist.

F | 11 H. Art'y. | U.S.C.T.

Sgt. Fortune

Co. E, 11 Reg't U. S. Col'd H. Art'y.

Appears on

Company Muster Roll

for Sept & Oct, 186 4.

Present or absent Present

Stoppage, $ 100 for

Due Gov't, $ 100 for

Valuation of horse, $ 100

Valuation of horse equipments, $ 100

Remarks: Enl'd April 19-1864.
Due Clothing $75

Book mark:

(358) *Copyist.*

E | 11 H. Art'y. | U.S.C.T.

Paul Folan

....., Co. E, 11 Reg't U. S. Col'd H. Art'y.

Appears on

Company Muster Roll

for ....., 186.

Present or absent .....

Stoppage, $.....100 for .....

.....

.....

Due Gov't, $.....100 for .....

.....

Valuation of horse, $.....100

Valuation of horse equipments, $.....100

Remarks: Fee Paid 19 Dec

Deserted Sept 25

.....

.....

.....

.....

.....

.....

Book mark: .....

(358) *Copyist.*

F | 11 H. Art'y. | U.S.C.T.

John Fortune

Pvt., Co. E, 11 Reg't U. S. Col'd H. Art'y.

Appears on

Company Muster Roll

for Jan. & Feb., 1865.

Present or absent Present

Stoppage, $ 100 for

Due Gov't, $ 100 for

Valuation of horse, $ 100

Valuation of horse equipments, $ 100

Remarks:

Book mark:

Hathaway

(358) *Copyist.*

F | 11 H. Art'y. | U.S.C.T.

Edgar Fortune

Pvt., Co. E, 11 Reg't U. S. Col'd H. Art'y.

Appears on

Company Muster Roll

for Nov. & Dec., 1865.

Present or absent Present

Stoppage, $ 100 for

Due Gov't, $ 100 for

Valuation of horse, $ 100

Valuation of horse equipments, $ 100

Remarks:

Book mark:

(358) Copyist.

F | 11 H. Art'y. | U.S.C.T.

John Fortune

Priv., Co. E, 11 Reg't U. S. Col'd H. Art'y.

Appears on

Company Muster Roll

for May and June, 1865.

Present or absent Present.

Stoppage, $ 100 for

Due Gov't, $ 100 for

Valuation of horse, $ 100

Valuation of horse equipments, $ 100

Remarks:

Book mark:

(358) J. B. James *Copyist.*

F | 11 H. Art'y. | U.S.C.T.

John Fortune,

Priv., Co. E, 11 Reg't U. S. Col'd H. Art'y.

Appears on

Company Muster Roll

for July and August, 186 5.

Present or absent Present.

Stoppage, $ 100 for

Due Gov't, $ 100 for

Valuation of horse, $ 100

Valuation of horse equipments, $ 100

Remarks: Stop for one letter, 01; one pr. scales, 70; one eagle, 02.

Book mark:

(358) J. B. Jones Copyist.

F | 11 H. Art'y. | U.S.C.T.

John Fortune

Priv., Co. E, 11 Reg't U. S. Col'd H. Art'y.

Appears on **Co. Muster-out Roll,** dated New Orleans, La., Oct. 2, 1865.

Muster-out to date Oct. 2, 1865.

Last paid to June 30, 1865.

Clothing account:

Last settled ....., 186 ; drawn since $ 100

Due soldier $ ..... 100 ; due U. S. $ 39 87/100

Am't for cloth'g in kind or money adv'd $ 100

Due U. S. for arms, equipments, &c., $ 100

Bounty paid $ none 100 ; due $ 100 00/100

Remarks: Joined at Org'l Org'n. Stop for mustered & cloth retained 6.00; one blank book 2.25; one Mor. bar 1.70; one foraging 70; one letter .01; one eagle .02.

Book mark:

---

(361) J. B. Jones Copyist.

Fortune John

C, Co. ——, 11 Reg't Mich.

1 **Enclosures.**

Bed Cards	Final Statements
Burial Records	Furloughs or L. of A.
Certs. of Dis. for Discharge	Med. Certificates
C. M. Charges	Med. Des. Lists
Descriptive Lists	Orders
Discharge Certificates	Pris. of War Record
Enlistment Papers 1	Resignations

Other papers relating to—

Admission to Hosp'l	Furlough or L. of A.
Casualty Sheet	Med. Examination
Confinement	Misc. Information
Contracts	Pay or Clothing
Death or Effects	Personal Reports
Desertion	Rank
Discharge from Hosp'l	Transfer to Hosp'l
Discharge from Service	Transfer to V. R. C.
Duty	Transportation

DECLARATION OF RECRUIT.

I, John Fortune desiring to VOLUNTEER as a Soldier in the *ARMY OF THE UNITED STATES*, for the term of Three Years do declare that I am Eighteen years and months of age; that I have never been discharged from the United States service on account of disability or by sentence of a court martial, or by order, before the expiration of a term of enlistment; and I know of no impediment to my serving honestly and faithfully as a soldier for Three Years

Given at Prov R I
The 28th day of Sept 18 63

Witness:
Sgt Thos F McKeel

his
John X Fortune
mark

No. 23

John Fortune

Volunteered at Providence R I

Capt 28th Regt Mass Vols

By Lieut Col Commdg

Regiment of Mass Vols

enlistment; last served in Company ( ) ..... Regiment

Reg't of .....

Discharged 18

11 Mass Hq

CONSENT IN CASE OF MINOR.

I, ... Do CERTIFY that I am the .....
of ..... ; that the said .....
is ..... years of age; and I do hereby freely give
my CONSENT to his volunteering as a SOLDIER in the ARMY OF THE UNITED STATES for the period of .....

Given at .....
The ..... day of .....

Witness .....

VOLUNTEER ENLISTMENT.

State of Rhode Island

Town of Providence

I, John Fortune born in Africa

in the State of a Farmer aged Eighteen years, and by occupation

day of September 1863 DO HEREBY ACKNOWLEDGE to have volunteered this Twenty Eight

OF AMERICA, for the period of Three Years, unless sooner discharged by proper authority: to serve as a SOLDIER in the ARMY OF THE UNITED STATES

Do also agree to accept such bounty, pay, rations and clothing, as are, or may be, established, by law for volunteers. And I, John Fortune do solemnly swear, that I will bear true faith and allegiance to the *United States of America*, and that I will serve them honestly and faithfully against all their enemies or opposers whomsoever; and that I will observe and obey the orders of the President of the United States, and the orders of the officers appointed over me, according to the Rules and Articles of War.

Sworn and Subscribed to, at Prov R I } his
this 28 day of Sept 1863. } John X Fortune
BEFORE J P Sanford mark
Maj 14th R I H A

I CERTIFY, ON HONOR, That I have carefully examined the above-named Volunteer, agreeable to the General Regulations of the Army, and that, in my opinion, he is free from all bodily defects and mental infirmity, which would, in any way, disqualify him from performing the duties of a soldier.

Surgeon EXAMINING SURGEON.

I CERTIFY, ON HONOR, That I have minutely inspected the Volunteer, John Fortune previously to his enlistment, and that he was entirely sober when enlisted; that to the best of my judgment and belief, he is of lawful age; and that, in accepting him as duly qualified to perform the duties of an able-bodied soldier, I have strictly observed the Regulations which govern the recruiting service. This soldier has Black eyes Black hair, Black complexion, is five feet, four inches high.

14th Regiment of R I H A Volunteers,

J B Mitchell RECRUITING OFFICER.

[illegible]

[illegible], 11 U.S. Col'd H. Art'y.

Private	Private

CARD NUMBERS.

1 6182194	26
2 6182340	27
3 6182492	28
4 6182634	29
5 6182771	30
6 6182902	31
7 6183043	32
8 6183170	33
9 6183282	34
10 6183391	35
11 6183499	36
12 6183605	37
13 6183712	38
14 9123805	39
15 9123957	40
16	41
17	42
18	43
19	44
20	45
21	46
22	47
23	48
24	49
25	50

Mark:

See also

F | 11 H. Art'y. | U.S.C.T.

Henry Foster

, Co. A, 11 Reg't U. S. Col'd H. Art'y.

Appears on

Company Descriptive Book

of the organization named above.

DESCRIPTION.

Age 39 years; height 5 feet 10½ inches.

Complexion Dark

Eyes Dk; hair Dk

Where born Richmond Va

Occupation Tobacconist

ENLISTMENT.

When Aug 13, 1863

Where Providence

By whom Lt Grubner; term 3 y'rs.

Remarks:

Saml

(3830) Coppist.

F | 11 H. Art'y. | U.S.C.T.

Henry Foster

, Co. C, 11 Reg't U. S. Col'd H. Art'y.

Appears on

Company Descriptive Book

of the organization named above.

DESCRIPTION.

Age 39 years; height 5 feet 10½ inches.

Complexion Dark

Eyes Dk; hair Dk

Where born Richmond Va

Occupation Tobacconist

ENLISTMENT.

When Aug 13, 1863.

Where Providence

By whom Lt Graber; term 3 y'rs.

Remarks:

Copyist.

(3830)

F | 11 H. Art'y. | U.S.C.T.

Henry Foster

Pvt., Co. A, 14 Reg't R. I. Col'd H. Art'y.*

Age 39 years.

Appears on

Company Muster-in Roll

of the organization named above. Roll dated Camp South near Providence R.I., Aug 28, 1863.

Muster-in to date Aug 28, 1863.

Joined for duty and enrolled:

When July 13, 1863.

Where Providence

Period 3 years.

Valuation of horse, $ 100

Valuation of horse equipments, $ 100

Remarks: 1st District

* This organization subsequently became Co. A, 11 Reg't U. S. Colored Heavy Artillery.

Book mark:

Prewitt

(356) Copyist.

I | 11 H. Art'y. | U.S.C.T.

Henry Foster

Pvt., Co. A, 14 Reg't R. I. Col'd H. Art'y.*

Appears on

Company Muster Roll

for Aug 28 to Dec 31, 1863.

Present or absent Present

Stoppage, $ 100 for

Due Gov't, $ 100 for

Valuation of horse, $ 100

Valuation of horse equipments, $ 100

Remarks:

*This organization subsequently became Co. A, 11 Reg't U. S. Colored Heavy Artillery.

Book mark:

Prewitt

Copyist.

F | 11 H. Art'y. | U.S.C.T.

Henry Foster

Pvt., Co. A, 14 Reg't R. I. Col'd H. Art'y.*

Appears on

Company Muster Roll

for Jan & Feb, 1864.

Present or absent Present

Stoppage, $ 100 for

Due Gov't, $ 100 for

Valuation of horse, $ 100

Valuation of horse equipments, $ 100

Remarks:

*This organization subsequently became Co. A, 11 Reg't U. S. Colored Heavy Artillery.

Book mark:

Prewitt

(358) Copyist.

11 H. Art'y. | U.S.C.T.

Henry Foster

Pvt., Co. A, 14 Reg't R. I. Col'd H. Art'y.*

Appears on

Company Muster Roll

for March & April, 1864.

Present or absent Present

Stoppage, $ 100 for

Due Gov't, $ 100 for

Valuation of horse, $ 100

Valuation of horse equipments, $ 100

Remarks:

*This organization subsequently became Co. A, 11 Reg't U. S. Colored Heavy Artillery.

Book mark:

(358) Copyist.

4 | 11 H. Art'y. | U.S.C.T.

Henry Foster

Pvt., Co. C, 8 Reg't U. S. Col'd H. Art'y.*

Appears on

Company Muster Roll

for May & June, 1864.

Present or absent Present

Stoppage, $ 100 for

Due Gov't, $ 100 for

Valuation of horse, $ 100

Valuation of horse equipments, $ 100

Remarks:

† This organization subsequently became Co. C, 11 Reg't U. S. Colored Heavy Artillery.

Book mark:

Pruitt

(358) Copyist.

A. | 11 H. Art'y. | U.S.C.T.

Henry Dorsey

R., Co. A, 11 Reg't U. S. Col'd H. Art'y.

Appears on

Company Muster Roll

for July & Aug., 1864.

Present or absent Present

Stoppage, $ 100 for

Due Gov't, $ 100 for

Valuation of horse, $ 100

Valuation of horse equipments, $ 100

Remarks: Enl'd April 19. 1861

Book mark:

(358) Copyist.

A | 11 H. Art'y. | U.S.C.T.

Henry Foster

Pvt., Co. A, 11 Reg't U. S. Col'd H. Art'y.

Appears on

Company Muster Roll

for Sept. & Oct., 1864.

Present or absent Present

Stoppage, $ 100 for

Due Gov't, $ 100 for

Valuation of horse, $ 100

Valuation of horse equipments, $ 100

Remarks:

Book mark:

Clark

Copyist.

A | 11 H. Art'y. | U.S.C.T.

Henry Foster

R. S., Co. A, 11 Reg't U. S. Col'd H. Art'y.

Appears on

Company Muster Roll

for Nov. & Dec., 1864.

Present or absent Present

Stoppage, $ 100 for

Due Gov't, $ 20/100 for Bounty

$ 2 93/100 " Q. M. & C.

Valuation of horse, $ 100

Valuation of horse equipments, $ 100

Remarks:

Book mark:

D. Fisher

Copyist.

A | 11 H. Art'y. | U.S.C.T.

Henry Foster

R. S., Co. A, 11 Reg't U. S. Col'd H. Art'y.

Appears on

Company Muster Roll

for Jan. & Feb., 1865.

Present or absent Present

Stoppage, $ 20/100 for Damaged

1 3.93 " C. & G. E.

Due Gov't, $ 100 for

Valuation of horse, $ 100

Valuation of horse equipments, $ 100

Remarks:

Book mark:

D. F. Fisher

Copyist.

A | 11 H. Art'y. | U.S.C.T.

Henry Hooker

Pvt., Co. A, 11 Reg't U. S. Col'd H. Art'y.

Appears on

Company Muster Roll

for Augt & Sept., 1865.

Present or absent Present

Stoppage, $ 20/100 for Ordnance

& 3.93 " C. & L. C.

Due Gov't, $ 100 for

Valuation of horse, $ 100

Valuation of horse equipments, $ 100

Remarks:

Book mark:

D. Fisher

Copyist.

H. | 11 H. Art'y. | U.S.C.T.

Henry Foster,

Pvt., Co. A, 11 Reg't U. S. Col'd H. Art'y.

Appears on

Company Muster Roll

for May & June, 1865.

Present or absent Present.

Stoppage, $ 100 for

Due Gov't, $ 100 for

Valuation of horse, $ 100

Valuation of horse equipments, $ 100

Remarks:

Book mark:

R M Examiner

(358) Copyist.

G", | 11 H. Art'y. | U.S.C.T.

Henry Foster,

Priv., Co. A, 11 Reg't U. S. Col'd H. Art'y.

Appears on

Company Muster Roll

for July & August, 1865.

Present or absent Present

Stoppage, $ 100 for

Due Gov't, $ 100 for

Valuation of horse, $ 100

Valuation of horse equipments, $ 100

Remarks:

Book mark:

R. H. Trauner
Copyist.

Pvt	11 H. Art'y.	U.S.C.T.

Henry Foster,

Pvt., Co. L, 11 Reg't U. S. Col'd H. Art'y.

Appears on **Co. Muster-out Roll,** dated New Orleans La., Oct. 2, 1865.

Muster-out to date Oct. 2, 1865.

Last paid to Feb. 28 1865.

Clothing account:

Last settled ....., 186 ; drawn since $ 100

Due soldier $ 1. 09/100 ; due U. S. $ 100

Am't for cloth'g in kind or money adv'd $ 100

Due U. S. for arms, equipments, &c., $ 6. 00/100

" " " " " " 65

Bounty paid $ ..... 100 ; due $ 100 00/100

Remarks: Joined Co'gl. Co'gs.

Stoppred for 1 Canteen,

Stoppred for 1 Musket and

Accouts. retained.

Book mark: V. 64 P. 128. 69.

R S Brenner

(361) *Copyist.*

Veteran. Writer

Co E, 11 U.S.Col'd H. Art'y.

Private	Private

CARD NUMBERS.

1 6 1 8 8 9 4 2	26
1 6 1 8 9 0 8 4	27
1 6 1 8 9 2 3 1	28
1 6 1 8 9 3 7 7	29
1 6 1 8 9 5 2 0	30
1 6 1 8 9 6 0 8	31
1 6 1 9 0 6 5 2,	32
1 9 1 2 4 8 8 3	33
9	34
10	35
11	36
12	37
13	38
14	39
15	40
16	41
17	42
18	43
19	44
20	45
21	46
22	47
23	48
24	49
25	50

Book Mark:

See also

S. 62687 - O. G. '90.
S. 130515. P. O. Wm. Fen.
G. L. O. 3. 20. 20. 80

J. D. Mark Esq.

F | 11 H. Art'y. | U.S.C.T.

William Fountain

, Co. E, 11 Reg't U. S. Col'd H. Art'y.

Appears on

Company Descriptive Book

of the organization named above.

DESCRIPTION.

Age 35 years; height 5 feet 7 inches.

Complexion Mulatto.

Eyes Brown; hair Blk.

Where born Louisville, Ky.

Occupation Barber.

ENLISTMENT.

When Sept. 26, 1863.

Where Prov., R. I.

By whom J. C. Engley; term 3 y'rs.

Remarks: Discharged June 1, 1864 order Gen. Banks at Plaquemine, La., on Surg. Cert. of Disability. Final statements and Deschalge Given June 1, 1864.

O. J. Markle,

Copyist.

F | 11 H. Art'y. | U.S.C.T.

William Fountain

Pvt., Co. E, 14 Reg't R. I. Col'd H. Art'y.*

Age 35 years.

Appears on

Company Muster-in Roll

of the organization named above. Roll dated Providence, R. I., Oct. 5, 1863.

Muster-in to date Oct. 5, 1863.

Joined for duty and enrolled:

When Sept. 26, 186 .

Where Prov., R. I.

Period 3 years.

Valuation of horse, $ 100

Valuation of horse equipments, $ 100

Remarks: Louisville, Ky.

* This organization subsequently became Co. E, 11 Reg't U. S. Colored Heavy Artillery.

Book mark:

C Chandler

(356)

Copyist.

F | 11 H. Art'y. | U.S.C.T.

William Fountain

Pvt, Co. E, 14 Reg't R. I. Col'd H. Art'y.*

Appears on

Company Muster Roll

for Oct. 5 to Dec. 31, 1863.

Present or absent Present

Stoppage, $ 100 for

Due Gov't, $ 100 for

Valuation of horse, $ 100

Valuation of horse equipments, $ 100

Remarks:

*This organization subsequently became Co. E, 11 Reg't U. S. Col'd Heavy Artillery.

Book mark:

C Chandler

(358) *Copyist.*

F | 11 H. Art'y. | U.S.C.T.

William Fountain

Pvt., Co. E, 14 Reg't R. I. Col'd H. Art'y.*

Appears on

Company Muster Roll

for Jan. & Feb., 1864.

Present or absent Present

Stoppage, $ 100 for

Due Gov't, $ 100 for

Valuation of horse, $ 100

Valuation of horse equipments, $ 100

Remarks: Due Laundress $.75

*This organization subsequently became Co. E, 11 Reg't U. S. Col'd Heavy Artillery.

Book mark:

C Chandler

(358)

Copyist.

F | 11 H. Art'y. | U.S.C.T.

William Fountain

....., Co. E, 14 Reg't R. I. Col'd H. Art'y.*

Appears on

Company Muster Roll

for Mch. & April, 1864.

Present or absent Present

Stoppage, $.....100 for .....

.....

Due Gov't, $.....100 for .....

.....

Valuation of horse, $.....100

Valuation of horse equipments, $.....100

Remarks: One Laundress .75¢

*This organization subsequently became Co. E, 11 Reg't U. S. Col'd Heavy Artillery.

Book mark: .....

C Chandler

Copyist.

F | 11 H. Art'y. | U.S.C.T.

William Fountain

Pvt., Co. E, 8 Reg't U. S. Col'd H. Art'y.*

Appears on

Company Muster Roll

for May & June, 1864.

Present or absent

Stoppage, $ 100 for

Due Gov't, $ 100 for

Valuation of horse, $ 100

Valuation of horse equipments, $ 100

Remarks: Discharged June 1, 1864 on acct. of Physical disability Discharge & Final Statement given. Order Maj. Gen. Banks. Due Laundress 75~

† This organization subsequently became Co. E, 11 Reg't U. S. Colored Heavy Artillery.

Book mark:

C Chandler

F | 11 H. Art'y. | U.S.C.T.

William Fountain

Pvt., Co. E, 8 Reg't U. S. Col'd H. Art'y.*

Appears on

Company Muster Roll

for May & June, 1864.

Present or absent .....

Stoppage, $ ..... 100 for .....

.....

Due Gov't, $ ..... 100 for .....

.....

Valuation of horse, $ 100

Valuation of horse equipments, $ 100

Remarks: Discharged for Physical Disability June 1, 1864 Order Gen. Banks Discharge and Final Statement given Due Laundress .75

.....

† This organization subsequently became Co. E, 11 Reg't U. S. Colored Heavy Artillery.

Book mark: .....

C Chandler

(358) *Copyist.*

F | 11 H. Art'y. | U.S.C.T.

William Fountaine

Pvt., Co. E, 11 Reg't U. S. Col'd H. Art'y.

Appears on **Co. Muster-out Roll,** dated New Orleans, La., Oct. 2, 1865.

Muster-out to date ....., 186 .

Last paid to Dec. from enrollment, 186 .

Clothing account:

Last settled....., 186 ; drawn since $.....100

Due soldier $.....100; due U. S. $.....100

Am't for cloth'g in kind or money adv'd $.....100

Due U. S. for arms, equipments, &c., $.....100

Bounty paid $.....100; due $.....100

Remarks: Joined as Org. Org. Discharged on Surg. Cert. of Disability, June 1/64, order of Maj. Gen. Banks. Discharge & final Stt. given June 1/64.

Book mark: .....

(361) J. B. Jones *Copyist.*

Fountain, William

P, Co. E, 11 Regt. U.S.C.H.A.

2 Enclosures.

Bed Cards	Descriptive Lists
Burial Records	Final Statements
Certs. of Dis. for Discharge 1	Furloughs
C. M. Charges	Med. Des. Lists
Med. Certificates E.P. 1	Orders

Other papers relating to—

Admission to Hosp'l	Furlough
Casualty Sheet (Officer's)	Med. Examination
Confinement	Misc. Information 1
Contracts	Pay or Clothing
Death or Effects	Personal Reports
Desertions	Rank
Discharge from Hosp'l	Transfer to Hosp'l
Discharge from Service	Transfer to V. R. C.
Duty	Transportation

DECLARATION OF RECRUIT.

I, William Fountain desiring to VOLUNTEER as a Soldier, in the *ARMY OF THE UNITED STATES*, for the term of three years do declare that I am twenty one years and months of age; that I have never been discharged from the United States service on account of disability or by sentence of a court martial, or by order, before the expiration of a term of enlistment; and I know of no impediment to my serving honestly and faithfully as a soldier for three years.

Given at Prov. R.I.

The 26 day of Sept 1863

Witness:

Lee J. C. Mitchell Jr

William his + Fountain
mark

No. 26

William Fountain

Volunteered at Prov. R.I.

Ohio 26

By Lt Langley

Regiment of Artillery

11 U.S.C. Heavy

enlistment; last served in Company ( )

Reg't of

Discharged 18

CONSENT IN CASE OF MINOR.

I, Do CERTIFY that I am the of ; that the said is years of age; and I do hereby freely give my CONSENT to his volunteering as a SOLDIER in the ARMY OF THE UNITED STATES for the period of

Given at

The day of

Witness:

VOLUNTEER ENLISTMENT.

State of Rhode Island Town of Providence

I, William Fountain born in Louisville

in the State of Kentucky aged Thirty five years, and by occupation a Dyer

DO HEREBY ACKNOWLEDGE to have volunteered this Twenty Sixth day of September 1863, to serve as a SOLDIER in the ARMY OF THE UNITED STATES OF AMERICA, for the period of Three Years, unless sooner discharged by proper authority: Do also agree to accept such bounty, pay, rations and clothing, as are, or may be, established, by law for volunteers. And I, William Fountain do solemnly swear, that I will bear true faith and allegiance to the *United States of America*, and that I will serve them honestly and faithfully against all their enemies or opposers whomsoever; and that I will observe and obey the orders of the President of the United States, and the orders of the officers appointed over me, according to the Rules and Articles of War.

Sworn and Subscribed to, at Prov R.I. this 26 day of Sept 1863. Before Mr R Corrington Justice of the Peace

his William × Fountain mark

I CERTIFY, ON HONOR, That I have carefully examined the above-named Volunteer, agreeable to the General Regulations of the Army, and that, in my opinion, he is free from all bodily defects and mental infirmity, which would, in any way, disqualify him from performing the duties of a soldier.

H. B. Courtright EXAMINING SURGEON.

I CERTIFY, ON HONOR, That I have minutely inspected the Volunteer, William Fountain previously to his enlistment, and that he was entirely sober when enlisted; that to the best of my judgment and belief, he is of lawful age; and that, in accepting him as duly qualified to perform the duties of an able-bodied soldier, I have strictly observed the Regulations which govern the recruiting service. This soldier has Brown *eyes* Dark *hair*, Light Mulatto *complexion*, is Five *feet*, Seven *inches high*.

15th *Regiment of* R.I.H.A *Volunteers*,

I B Congdon RECRUITING OFFICER.

NOTE 1.

The company commander will here add a statement of all the *facts* known to him concerning the disease or wound or cause of disability of the soldier; the time, place, manner, and all the circumstances under which the injury occurred, or disease originated or appeared; the duty, or service, or situation of the soldier at the time the injury was received or disease contracted, stating particularly whether the injury was received or the disease contracted in the line of his duty; and whatever other facts may aid a judgment as to the cause, immediate or remote, of the disability, and the circumstances attending it.

When the *facts* are not known to the company commander, the certificate of any officer, or affidavit of other person having such knowledge, will be appended—as the surgeon in charge of a hospital, the officer commanding a detachment of recruits, &c., &c.

NOTE 2.

When a *probable* case for *pension, special care* must be taken to state the *degree* of disability—as ½, ⅓, &c., &c.; to describe particularly the disability, wound, or disease; the extent to which it deprives him of the use of any limb or faculty, or affects his health, strength, activity, constitution, or capacity to labor or earn his subsistence. The surgeon will add, from his knowledge of the facts and circumstances, and from the evidence in the case, his professional opinion of the cause or origin of the disability. In the case of discharges by Medical Inspectors, the last paragraph will state that the "discharge was given by consent of the soldier, after a personal examination, and for disability, the nature, degree, and origin of which are correctly described in the within certificate."

Par. 1260 Regulations, Edit. 1861.

Medical officers, in giving certificates of disability, are to take particular ca[re] in all cases that have not been under their charge; and especially in epilepsy, convulsions, chronic rheumatism, derangement of the urinary organs, ophthalmia, ulcers, or any obscure disease liable to be feined or purposely produced; and in no case shall such certificate be given until after sufficient time and examination to detect any attempt at deception.

DIRECTIONS.

This certificate will be made out in *duplicate* by the soldier's company commander, or other officer commanding the separate detachment to which he belongs and sent by him to the surgeon who has charge of the hospital where the soldier is sick. The surgeon will then fill out and sign the surgeon's certificate, and forward these papers to the regimental, detachment, or post commander, who will forward them, with his action endorsed thereon, through the proper channel, to his division commander; or, if the troops are not attached to a division, to his corps, department, or other commander or officer to whom the authority to discharge enlisted men may be specially delegated.

These certificates, after having received the action of the highest authority to which they are required to be sent, will be returned through the same channel to the regimental, post, or detachment, commander, who will, if the discharge is authorized by the endorsement of the proper authority, sign the soldier's discharge, and the last certificate on this paper; see that the soldier is furnished with the proper final statements in duplicate, and forward BOTH of these certificates *direct* to the Adjutant General United States Army, at Washington, D. C.; they will not under any circumstances be given into the hands of the soldier.

1864 64

CERTIFICATE OF DISABILITY FOR DISCHARGE

No. 293 IN THE CASE OF Pvt

William Fountain

a Private Co. "E"

Fourteenth Reg't of N.H. Vols

U.S. N.

Designated for discharge

Geo. Cuttle

Med Inspector U.S.A.

Head Quarters Dept. of the Gulf,
New Orleans, May 19, 1864.

To be discharged

By command of Maj. Gen. Banks.

C. Emerson

Lt. & A.A.G.

Hd Qrs Defences N Orleans
May 19, 1864.

Respectfully returned with reference to indorsement,

By command Major Genl Reynolds

John Lourey
Maj Genl

Received (A. G. Office) _____, 186 .

Adjutant General's Office,

July 20 1864

Duplicate sent the Surgeon in Charge

ARMY OF THE UNITED STATES.

CERTIFICATE OF DISABILITY FOR DISCHARGE.

William Fountain a Private of Captain George W. Coles Company, ("E") of the Fourteenth Regiment of ~~United States~~ R. I. H. Artly was enlisted by J. C. Engley Recruiting Officer of the Fourteenth Regiment of R. I. H. Artly at Providence R. Island on the twenty sixth day of September 1863, to serve three years; he was born in Louisville in the State of Kentucky is thirty five years of age, five feet seven inches high, Dark complexion, Brown eyes, Black hair, and by occupation when enlisted a Barber During the last two months said soldier has been unfit for duty sixty days.* Private William Fountain took a severe cold while on duty during a rain storm last December on Dutch Island R. Island which settled on his Lungs and I Belive was the cause of his present illness

STATION: Plaquemine La

DATE: May 4th 1864

Geo. W. Cole
Capt. 14th R. I. H. Art.
Commanding Company.

I CERTIFY, that I have carefully examined the said William Fountain of Captain George W. Coles Company, and find him incapable of performing the duties of a soldier because of† Inflammation of the Lungs more or less complicated with Hepatic Disease. He was not been able to perform the duties of a Soldier for the space of three months being unable the most of the time leave the Hospital I believe he contracted the Disease Since entering the Service and is unable to be connected with the Veteran Reserve Corps. Disability G.O.

Horace Mecorney
Asst Surgeon.

DISCHARGED, this First day of June 1864, at

J. J. Comstock Jr
Major
Commanding the Reg't.

The *soldier* desires to be *addressed* at

Town ..... *County* ..... *State* .....

* See Note 1 on the back of this. †See Note 2 on the back of this.

[A. G. O. No. 100 & 101—First.] (DUPLICATES.)

14 U.S. C.H.A.

Cairo, Ill., July 6 1864.

Order No. 3392

Requisition of William Fontain

Pvt Co "E" 14th R.I.

Art

From Cairo Ill

To Edgerton Ohio

Nature of Service Discharged

from U.S. Service

filed 12-16-93

Co. F, 11 U.S.Col'd H. Art'y.

Private	Private

CARD NUMBERS.

1	6 1 9 0 7 3 3	26
2	6 1 9 0 8 8 1	27
3	6 1 9 1 0 2 8	28
4	6 1 9 1 1 7 2	29
5	6 1 9 1 3 1 6	30
6	6 1 9 1 4 6 1	31
7	6 1 9 1 5 9 5	32
8	6 1 9 1 7 2 5	33
9	6 1 9 1 8 4 7	34
10	6 1 9 1 9 6 9	35
11	6 1 9 2 1 0 1	36
12	6 1 9 2 2 3 0	37
13	6 1 9 2 3 5 4	38
14	9 1 2 5 0 3 4	39
15		40
16		41
17		42
18		43
19		44
20		45
21		46
22		47
23		48
24		49
25		50

Book Mark:

See also

F | 11 H. Art'y. | U.S.C.T.

Charles Fowler

, Co. F, 11 Reg't U. S. Col'd H. Art'y.

Appears on

Company Descriptive Book

of the organization named above.

DESCRIPTION.

Age 24 years; height 5 feet 11 inches.

Complexion Blk.

Eyes Blk.; hair Blk.

Where born Orange Co, New York.

Occupation Farmer.

ENLISTMENT.

When Oct. 16, 1863.

Where Prov., R. I.

By whom J. C. Engley; term 3 y'rs.

Remarks:

O. J. Markle,

(383y) Copyist.

F | 11 H. Art'y. | U.S.C.T.

Charles Fowler

Pvt., Co. F, 14 Reg't R. I. Col'd H. Art'y.*

Age 29 years.

Appears on

Company Muster-in Roll

of the organization named above. Roll dated Providence R.I. Oct 20, 1863.

Muster-in to date Oct 20, 1863.

Joined for duty and enrolled:

When Oct 16, 186 .

Where Boro, R. I.

Period 3 years.

Valuation of horse, $ 100

Valuation of horse equipments, $ 100

Remarks:

* This organization subsequently became Co. F, 11 Reg't U. S. Colored Heavy Artillery.

Book mark:

S. Neal

(356) *Copyist.*

F | 11 H. Art'y. | U.S.C.T.

Charles Fowler

Pvt., Co. F, 14 Reg't R. I. Col'd H. Art'y.*

Appears on

Company Muster Roll

for Oct 2 to Dec 31, 1863.

Present or absent Present

Stoppage, $.....100 for .....

.....

.....

Due Gov't, $.....100 for .....

.....

Valuation of horse, $.....100

Valuation of horse equipments, $.....100

Remarks:.....

.....

.....

.....

.....

.....

.....

* This organization subsequently became Co. F. 11 Reg't U. S. Colored Heavy Artillery.

Book mark:.....

L Neal

(358) Copyist.

F | 11 H. Art'y. | U.S.C.T.

Charles Fowler

Pvt., Co. F, 14 Reg't R. I. Col'd H. Art'y.*

Appears on

Company Muster Roll

for Jan & Feb, 1864

Present or absent Present

Stoppage, $ ---- 100 for ----

Due Gov't, $ ---- 100 for ----

Valuation of horse, $ ---- 100

Valuation of horse equipments, $ ---- 100

Remarks: ----

* This organization subsequently became Co. F. 11 Reg't U. S. Colored Heavy Artillery.

Book mark: ----

L Neal

(358) *Copyist.*

F | 11 H. Art'y. | U.S.C.T.

Charles Fowler

Pri, Co. F, 14 Reg't R. I. Col'd H. Art'y.*

Appears on

Company Muster Roll

for Mar & Apr, 1864

Present or absent Present

Stoppage, $ 100 for

Due Gov't, $ 100 for

Valuation of horse, $ 100

Valuation of horse equipments, $ 100

Remarks:

* This organization subsequently became Co. F. 11 Reg't U. S. Colored Heavy Artillery.

Book mark:

L Neal

(358) Copyist.

F | 11 H. Art'y. | U.S.C.T.

Charles Fowler

Pri, Co. F, 8 Reg't U. S. Col'd H. Art'y.*

Appears on

Company Muster Roll

for May & June, 1864.

Present or absent Present

Stoppage, $ 100 for

Due Gov't, $ 100 for

Valuation of horse, $ 100

Valuation of horse equipments, $ 100

Remarks: Stop for one
Rifle Lost Upon
Cohn

†This organization subsequently became Co. F, 11 Reg't U. S. Colored Heavy Artillery.

Book mark:

A Neal

(358) *Copyist.*

F | 11 H. Art'y. | U.S.C.T.

Charles Fowler.

Pvt., Co. F, 11 Reg't U. S. Col'd H. Art'y.

Appears on

Company Muster Roll

for July and Aug., 1864.

Present or absent Present.

Stoppage, $ 100 for

Due Gov't, $ 100 for

Valuation of horse, $ 100

Valuation of horse equipments, $ 100

Remarks: Stop for wages, 20,
S. Cone 12, Free April 19/64,

Book mark:

Exline.

Copyist.

Of | 11 H. Art'y. | U.S.C.T.

Charles Fowler.

Pvt., Co. F, 11 Reg't U. S. Col'd H. Art'y.

Appears on

Company Muster Roll

for Sept. and Oct., 1864.

Present or absent Present.

Stoppage, $ 100 for

Due Gov't, $ 100 for

Valuation of horse, $ 100

Valuation of horse equipments, $ 100

Remarks: Slop for wife. 20 S. corn. 12, Free April 19/61.

Book mark:

Exline.

(358) Copyist.

F | 11 H. Art'y. | U.S.C.T.

Charles Fowler,

Pvt., Co. F, 11 Reg't U. S. Col'd H. Art'y.

Appears on

Company Muster Roll

for Nov. and Dec., 1864.

Present or absent Present.

Stoppage, $ 100 for

Due Gov't, $ 100 for

Valuation of horse, $ 100

Valuation of horse equipments, $ 100

Remarks: Stub for wiper, 20
S. cone, 12 screwdriver, 23
canteen, 41, Free April 19/64.

Book mark:

Exline.

(358) *Copyist.*

F | 11 H. Art'y. | U.S.C.T.

Charles Fowler.

Pvt., Co. F, 11 Reg't U. S. Col'd H. Art'y.

Appears on

Company Muster Roll

for Jan. and Feb., 1865.

Present or absent Present.

Stoppage, $ 100 for

Due Gov't, $ 100 for

Valuation of horse, $ 100

Valuation of horse equipments, $ 100

Remarks: Slop for wiper. 20
Screwdriver. 23 Canteen. 41

Book mark:

Exline.

Copyist.

F | 11 H. Art'y. | U.S.C.T.

Charles Fowler.

Pvt., Co. F, 11 Reg't U. S. Col'd H. Art'y.

Appears on

Company Muster Roll

for Mar. and Apr., 1865.

Present or absent Present.

Stoppage, $ 100 for

Due Gov't, $ 100 for

Valuation of horse, $ 100

Valuation of horse equipments, $ 100

Remarks: Slip for wiper. 20
Screwdriver. 23 canteen. 41

Book mark:

Oxline.

(358) Copyist.

F. | 11 H. Art'y. | U.S.C.T.

Charles Fowler

Pvt., Co. F, 11 Reg't U. S. Col'd H. Art'y.

Appears on

Company Muster Roll

for May & June, 186 5.

Present or absent Present

Stoppage, $ 100 for

Due Gov't, $ 100 for

Valuation of horse, $ 100

Valuation of horse equipments, $ 100

Remarks: Stop. for Mos. Pay $1.76.

Book mark:

(358)

Copyist.

F. | 11 H. Art'y. | U.S.C.T.

Charles Fowler

Pvt., Co. F, 11 Reg't U. S. Col'd H. Art'y.

Appears on

Company Muster Roll

for July & Aug., 1865.

Present or absent Present

Stoppage, $ 100 for

Due Gov't, $ 100 for

Valuation of horse, $ 100

Valuation of horse equipments, $ 100

Remarks:

Book mark:

(358)

Copyist.

F. | 11 H. Art'y. | U.S.C.T.

Charles Fowler

Bf, Co. F, 11 Reg't U. S. Col'd H. Art'y.

Appears on **Co. Muster-out Roll,** dated New Orleans La Oct 2 1865.

Muster-out to date Oct. 2, 1865.

Last paid to June 30, 1865.

Clothing account:

Last settled ....., 186 ; drawn since $ 100

Due soldier $ 17.72 100; due U. S. $ 100

Am't for cloth'g in kind or money adv'd $ 100

Due U. S. for arms, equipments, &c., $ 6.00 100

Bounty paid $ None 100; due $ 100.00 100

Remarks: Joined at Brandy Sta. Va. & Stole for use Musket Accts. retained.

Book mark: Vol. 225. P 163, 76

Leib

(861) *Copyist.*

Fowler Charles

P, Co. , 11 Reg't Mass.

1 **Enclosures.**

Bed Cards	Final Statements
Burial Records	Furloughs or L. of A.
Certs. of Dis. for Discharge	Med. Certificates
C. M. Charges	Med. Des. Lists
Descriptive Lists	Orders
Discharge Certificates	Pris. of War Record
Enlistment Papers 1	Resignations

Other papers relating to—

Admission to Hosp'l	Furlough or L. of A.
Casualty Sheet	Med. Examination
Confinement	Misc. Information
Contracts	Pay or Clothing
Death or Effects	Personal Reports
Desertion	Rank
Discharge from Hosp'l	Transfer to Hosp'l
Discharge from Service	Transfer to V. R. C.
Duty	Transportation

DECLARATION OF RECRUIT.

I, Charles Fowler desiring to VOLUNTEER as a Soldier in the *ARMY OF THE UNITED STATES*, for the term of three Years do declare that I am 29 years and months of age; that I have never been discharged from the United States service on account of disability or by sentence of a court martial, or by order, before the expiration of a term of enlistment; and I know of no impediment to my serving honestly and faithfully as a soldier for three Years.

Given at Flint Mich

The 16 day of Oct 1863

Witness:

Jos Pierson Jr

Charles Fowler
his mark

No. .....

Charles Fowler

Volunteered at Detroit Mich

Enlisted Oct 16 1863

By Lieut Pierson

Regiment of 11th U S Cavalry

enlistment; last served in Company .....

Reg't of .....

Discharged .....

18 .....

CONSENT IN CASE OF MINOR.

I, ...

Do CERTIFY that I am the .....

of .....; that the said .....

is .....

years of age; and I do hereby freely give my CONSENT to his volunteering as a SOLDIER in the ARMY OF THE UNITED STATES for the period of .....

Given at .....

The .....

day of .....

Witness:

VOLUNTEER ENLISTMENT.

State of Rhode Island Town of Providence

I, Charles Fowler born in ——

in the State of ——— aged 29 years, and by occupation a Farmer DO HEREBY ACKNOWLEDGE to have volunteered this 8th day of October 1863 to serve as a SOLDIER in the ARMY OF THE UNITED STATES OF AMERICA, for the period of Three Years, unless sooner discharged by proper authority: Do also agree to accept such bounty, pay, rations and clothing, as are, or may be, established, by law for volunteers. And I, Chas Fowler do solemnly swear, that I will bear true faith, and allegiance to the *United States of America*, and that I will serve them honestly and faithfully against all their enemies or opposers whomsoever; and that I will observe and obey the orders of the President of the United States, and the orders of the officers appointed over me, according to the Rules and Articles of War.

Sworn and Subscribed to, at Prov RI

this 8th day of Oct 1863

BEFORE S. Lafayette Capt 1st R.I.A. Charles X Fowler mark

I CERTIFY, ON HONOR, That I have carefully examined the above-named Volunteer, agreeable to the General Regulations of the Army, and that, in my opinion, he is free from all bodily defects and mental infirmity, which would, in any way, disqualify him from performing the duties of a soldier.

John Sanford Jr M.D.

EXAMINING SURGEON.

I CERTIFY, ON HONOR, That I have minutely inspected the Volunteer, Chas Fowler previously to his enlistment, and that he was entirely sober when enlisted; that to the best of my judgment and belief, he is of lawful age; and that, in accepting him as duly qualified to perform the duties of an able-bodied soldier, I have strictly observed the Regulations which govern the recruiting service. This soldier has Black *eyes* Black *hair* Black *complexion*, is five *feet*, 11 *inches high*.

Sworn by me this 8th day of Oct 1863

Capt 1st R.I.A.

Regiment of ——— *Volunteers*,

RECRUITING OFFICER.

1	6

CARD NUMBERS.

1	6 1 9 0 7 8 4
2	6 1 9 0 8 8 2
3	6 1 9 1 0 2 9
4	6 1 9 1 1 7 3
5	6 1 9 1 3 1 7
6	6 1 9 1 4 6 0
7	6 1 9 1 5 9 7
8	6 1 9 1 7 [illegible] 6
9	6 1 9 1 [illegible] 8
10	6 1 9 1 [illegible] 0
11	6 1 9 2 [illegible] 2
12	6 1 9 2 2 3 4
13	6 1 9 2 3 5 5
14	9 1 2 5 0 3 5
15	
16	
17	
18	
19	
20	
21	
22	
23	
24	
25	

26	
27	
28	
29	
30	
31	
32	
33	
34	
35	
36	
37	
38	
39	
40	
41	
42	
43	
44	
45	
46	
47	
48	
49	
50	

A. 2522319 Powers
USVa 1/10/33 C&P

J. D. Mark Co.

F | 11 H. Art'y. | U.S.C.T.

William H. Fowler

, Co. F, 11 Reg't U. S. Col'd H. Art'y.

Appears on

Company Descriptive Book

of the organization named above.

DESCRIPTION.

Age 23 years; height 5 feet 10 inches.

Complexion Dk.

Eyes Dk.; hair Dk.

Where born South Hampsted, L.I., N.Y.

Occupation Laborer.

ENLISTMENT.

When Oct. 3, 1863.

Where Prov., R.I.

By whom A. Viall; term 3 y'rs.

Remarks:

O. J. Markle.

(383y) Copyist.

F | 11 H. Art'y. | U.S.C.T.

William H. Fowler

Pvt., Co. F, 14 Reg't R. I. Col'd H. Art'y.*

Age 23 years.

Appears on

Company Muster-in Roll

of the organization named above. Roll dated Providence R.I. Oct 20, 1863.

Muster-in to date Oct 20, 1863.

Joined for duty and enrolled:

When Oct 3, 186 .

Where Prov R.I.

Period 3 years.

Valuation of horse, $ 100

Valuation of horse equipments, $ 100

Remarks:

* This organization subsequently became Co. F, 11 Reg't U. S. Colored Heavy Artillery.

Book mark:

L Neal

Copyist.

F | 11 H. Art'y. | U.S.C.T.

William H. Fowler

Pvt., Co. F, 14 Reg't R. I. Col'd H. Art'y.*

Appears on

Company Muster Roll

for Oct 20 to Dec 31, 1863.

Present or absent Present

Stoppage, $.....100 for .....

.....

Due Gov't, $.....100 for .....

.....

Valuation of horse, $.....100

Valuation of horse equipments, $.....100

Remarks:.....

.....

.....

.....

.....

.....

.....

.....

* This organization subsequently became Co. F. 11 Reg't U. S. Colored Heavy Artillery.

Book mark:.....

.....

(358) *Copyist.*

F. | 11 H. Art'y. | U.S.C.T.

William H. Fowler

Pvt, Co. F, 14 Reg't R. I. Col'd H. Art'y.*

Appears on

Company Muster Roll

for Jan & Feb, 186 4

Present or absent Present

Stoppage, $ 100 for

Due Gov't, $ 100 for

Valuation of horse, $ 100

Valuation of horse equipments, $ 100

Remarks:

* This organization subsequently became Co. F. 11 Reg't U. S. Colored Heavy Artillery.

Book mark:

(358) A Neal

Copyist.

F | 11 H. Art'y. | U.S.C.T.

William H. Fowler

Pvt., Co. F, 14 Reg't R. I. Col'd H. Art'y.*

Appears on

Company Muster Roll

for Mar & Apr, 186 4

Present or absent Present

Stoppage, $ 100 for

Due Gov't, $ 100 for

Valuation of horse, $ 100

Valuation of horse equipments, $ 100

Remarks:

* This organization subsequently became Co. F, 11 Reg't U. S. Colored Heavy Artillery.

Book mark:

L Neal

(358) Copyist.

F | 11 H. Art'y. | U.S.C.T.

William H. Fowler

Co., Co. F, 8 Reg't U. S. Col'd H. Art'y.*

Appears on

Company Muster Roll

for May & June, 1864.

Present or absent Present

Stoppage, $ 100 for

Due Gov't, $ 100 for

Valuation of horse, $ 100

Valuation of horse equipments, $ 100

Remarks: Stop for one C.B. Blalet, Span Cone and String Vic.

† This organization subsequently became Co. F, 11 Reg't U. S. Colored Heavy Artillery.

Book mark:

D. Neal

Copyist.

F. | 11 H. Art'y. | U.S.C.T.

William H. Fowler.

Pvt., Co. F, 11 Reg't U. S. Col'd H. Art'y.

Appears on

Company Muster Roll

for July and Aug., 1864.

Present or absent Present

Stoppage, $ 100 for

Due Gov't, $ 100 for

Valuation of horse, $ 100

Valuation of horse equipments, $ 100

Remarks: Sick for C. B. Plates 08, Scurvy 12, Spring Vine. 30 Free April 19/64.

Book mark:

Enlisted.

Copyist.

F | 11 H. Art'y. | U.S.C.T.

William H. Fowler.

Pvt., Co. F, 11 Reg't U. S. Col'd H. Art'y.

Appears on

Company Muster Roll

for Sept. and Oct., 186 4.

Present or absent Present.

Stoppage, $ 100 for

Due Gov't, $ 100 for

Valuation of horse, $ 100

Valuation of horse equipments, $ 100

Remarks: Stoppage for Cartridge Box Plate, 07 S. cone. 12 Spring Vise. 30 Free April 19/64.

Book mark:

Exline.

Copyist.

F | 11 H. Art'y. | U.S.C.T.

William H. Fowler.

Pvt., Co. F, 11 Reg't U. S. Col'd H. Art'y.

Appears on

Company Muster Roll

for Nov. and Dec., 1864.

Present or absent Present.

Stoppage, $ 100 for

Due Gov't, $ 100 for

Valuation of horse, $ 100

Valuation of horse equipments, $ 100

Remarks: Stop for C. B. Plate. 07
wiper. 20 S. cone. 12 Spring Case. 30
Free April 19/61.

Book mark:

Erline.

(358) *Copyist.*

F | 11 H. Art'y. | U.S.C.T.

William H. Fowler,

Prvt., Co. F, 11 Reg't U. S. Col'd H. Art'y.

Appears on

Company Muster Roll

for Jan. and Feb., 1865.

Present or absent Present.

Stoppage, $ 100 for

Due Gov't, $ 100 for

Valuation of horse, $ 100

Valuation of horse equipments, $ 100

Remarks: Stop for wipes, 20
haversack. 67

Book mark:

Exline.

(358) *Copyist.*

J. | 11 H. Art'y. | U.S.C.T.

William H. Fowler,

Pvt., Co. F, 11 Reg't U. S. Col'd H. Art'y.

Appears on

Company Muster Roll

for Mar. and Apr., 1865.

Present or absent Present.

Stoppage, $ 100 for

Due Gov't, $ 100 for

Valuation of horse, $ 100

Valuation of horse equipments, $ 100

Remarks: Slop for wiper. 20
haversack. 67

Book mark:

Exline.

(358) *Copyist.*

F. | 11 H. Art'y. | U.S.C.T.

William H. Fowler

Pvt., Co. F, 11 Reg't U. S. Col'd H. Art'y.

Appears on

Company Muster Roll

for May & June, 1865.

Present or absent Present.

Stoppage, $ 100 for

Due Gov't, $ 100 for

Valuation of horse, $ 100

Valuation of horse equipments, $ 100

Remarks: Stop for Hatchet

22.

Book mark:

Leib

(358) Copyist.

F. | 11 H. Art'y. | U.S.C.T.

William H. Fowler

Sgt., Co. F, 11 Reg't U. S. Col'd H. Art'y.

Appears on

Company Muster Roll

for July & Aug., 1865.

Present or absent Present

Stoppage, $ 100 for

Due Gov't, $ 100 for

Valuation of horse, $ 100

Valuation of horse equipments, $ 100

Remarks: Stop. for Advance

.08

Book mark :

Leib

(358) Copyist.

F. | 11 H. Art'y. | U.S.C.T.

William H. Fowler

Pvt., Co. F, 11 Reg't U. S. Col'd H. Art'y.

Appears on **Co. Muster-out Roll,** dated New Orleans, La. Oct. 7 1865.

Muster-out to date Oct. 2, 1865.

Last paid to June 30, 1865.

Clothing account:

Last settled ....., 186 ; drawn since $ 100

Due soldier $ ..... 100; due U. S. $ 16.95 100

Am't for cloth'g in kind or money adv'd $ 100

Due U. S. for arms, equipments, &c., $ ×8.33 100

Bounty paid $ None 100; due $ 100.00 100

Remarks: Joined at Org'n. Org'n. ×Stop. for one Knapsack & accts. Retained. Stop. for C.B. plate, Tr. & sack strap.

Book mark :

Leib

(361) *Copyist.*

Fowler William H.

P, Co. , 11 Reg't USCHA

1 **Enclosures.**

Bed Cards	Final Statements
Burial Records	Furloughs or L. of A.
Certs. of Dis. for Discharge	Med. Certificates
C. M. Charges	Med. Des. Lists
Descriptive Lists	Orders
Discharge Certificates	Pris. of War Record
Enlistment Papers /	Resignations

Other papers relating to—

Admission to Hosp'l	Furlough or L. of A.
Casualty Sheet	Med. Examination
Confinement	Misc. Information
Contracts	Pay or Clothing
Death or Effects	Personal Reports
Desertion	Rank
Discharge from Hosp'l	Transfer to Hosp'l
Discharge from Service	Transfer to V. R. C.
Duty	Transportation

DECLARATION OF RECRUIT.

I, William H Fowler desiring to VOLUNTEER as a Soldier in the *ARMY OF THE UNITED STATES*, for the term of three years do declare that I am 23 years and months of age; that I have never been discharged from the United States service on account of disability or by sentence of a court martial, or by order, before the expiration of a term of enlistment; and I know of no impediment to my serving honestly and faithfully as a soldier for three years

Given at Providence R I

The third day of Oct 18 63

Witness:

J. H. Whitney Jr

William H Fowler
his
Mark

No. 2

William H Fowler

Volunteered at Providence, R I

Central

3

1863,

By Lt Col Pub Fac

Regiment of

14 U S C H D

enlistment; last served in Company ( )

Reg't of

Discharged

CONSENT IN CASE OF MINOR.

I, Do CERTIFY that I am the

of ; that the said

is years of age; and I do hereby freely give

my CONSENT to his volunteering as a SOLDIER in the ARMY OF THE UNITED STATES for the period of

Given at

The day of

Witness

VOLUNTEER ENLISTMENT.

State of Town of

I, William H Fowler born in North Hempstead L.I.
in the State of New York aged 23 years, and by occupation a Labourer do HEREBY ACKNOWLEDGE to have volunteered this third day of October 1863 to serve as a SOLDIER in the ARMY OF THE UNITED STATES OF AMERICA, for the period of Three years, unless sooner discharged by proper authority: Do also agree to accept such bounty, pay, rations and clothing, as are, or may be, established, by law for volunteers. And I, William H Fowler do solemnly swear, that I will bear true faith and allegiance to the *United States of America*, and that I will serve them honestly and faithfully against all their enemies or opposers whomsoever; and that I will observe and obey the orders of the President of the United States, and the orders of the officers appointed over me, according to the Rules and Articles of War.

Sworn and Subscribed to, at Providence R.I.
this third day of Oct 1863.
BEFORE Me R Corscaden
Justice of the Peace

William H Fowler
his
Mark

I CERTIFY, ON HONOR, That I have carefully examined the above-named Volunteer, agreeable to the General Regulations of the Army, and that, in my opinion, he is free from all bodily defects and mental infirmity, which would, in any way, disqualify him from performing the duties of a soldier.

C Johnson Gardner M.D.

EXAMINING SURGEON.

I CERTIFY, ON HONOR, That I have minutely inspected the Volunteer, William H Fowler previously to his enlistment, and that he was entirely sober when enlisted; that to the best of my judgment and belief, he is of lawful age; and that, in accepting him as duly qualified to perform the duties of an able-bodied soldier, I have strictly observed the Regulations which govern the recruiting service. This soldier has dark *eyes* dark *hair*, dark *complexion*, is 5 *feet*, 10 *inches high*.

Regiment of *Volunteers*,

RECRUITING OFFICER.

3rd, 11th U.S.Col'd H.A.

Female	Private

CARD NUMBERS.

1	6	1 9 6 0 8 8	26
2	6	1 9 6 2 4 6	27
3	6	1 9 6 3 9 2	28
4	6	1 9 6 5 4 7	29
5	6	1 9 6 7 0 3	30
6	6	1 9 6 8 5 0	31
7	6	1 9 7 0 1 1	32
8	6	1 9 7 1 4 9	33
9	6	1 9 7 2 7 4	34
10	6	1 9 7 3 9 6	35
11	6	1 9 7 5 0 6	36
12	6	1 9 7 6 2 2	37
13	6	1 9 7 7 2 9	38
14	9	1 2 5 4 8 6	39
15			40
16			41
17			42
18			43
19			44
20			45
21			46
22			47
23			48
24			49
25			50

Specials

S695938 Land
S.706974. P.G.90.
1320262 P.O. Mon

Mr Burton Francis
57 Ferris Ave.
White Plains NY
8/16/40

J. A. Mark Co.

I | 11 H. Art'y. | U.S.C.T.

Prister Francis

, Co. I, 11 Reg't U. S. Col'd H. Art'y.

Appears on

Company Descriptive Book

of the organization named above.

DESCRIPTION.

Age 18 years; height 5 feet 7 inches.

Complexion African

Eyes Blk; hair Blk

Where born New Roshell N.Y.

Occupation Farmer

ENLISTMENT.

When Nov 13, 186 .

Where Prov R.I.,

By whom J.C. Engly; term 3 y'rs.

Remarks: Mustered out

Griffith

Copyist.

H | **11 H. Art'y.** | **U.S.C.T.**

Bristol Francis

Priv., Co. D, 14 Reg't R. I. Col'd H. Art'y.*

Age 18 years.

Appears on

Company Muster-in Roll

of the organization named above. Roll dated Providence R.I. Nov 28, 1863.

Muster-in to date Nov 28, 1863.

Joined for duty and enrolled:

When Nov. 13, 1863.

Where Providence R.I.

Period 3 years.

Valuation of horse, $ 100

Valuation of horse equipments, $ 100

Remarks: 10th Batt. R.C.

* This organization subsequently became Co. D, 11 Reg't U. S. Colored Heavy Artillery.

Book mark:

C A Harper

Copyist.

7 | 11 H. Art'y. | U.S.C.T.

Bristol Ferry

Ferri, Co. I, 14 Reg't R. I. Col'd H. Art'y.*

Appears on

Company Muster Roll

for Nov 28 to Dec 31, 1869.

Present or absent Present

Stoppage, $ 100 for

Due Gov't, $ 100 for

Valuation of horse, $ 100

Valuation of horse equipments, $ 100

Remarks:

*This organization subsequently became Co. I, 11 Reg't U. S. Col'd Heavy Artillery.

Book mark:

O. A. Barker

(358) *Copyist.*

F | 11 H. Art'y. | U.S.C.T.

Butler Francis

Pvt., Co. I, 14 Reg't R. I. Col'd H. Art'y.*

Appears on

Company Muster Roll

for Jan & Feb, 1864

Present or absent Present

Stoppage, $ 100 for

Due Gov't, $ 100 for

Valuation of horse, $ 100

Valuation of horse equipments, $ 100

Remarks:

*This organization subsequently became Co. I, 11 Reg't U. S. Col'd Heavy Artillery.

Book mark:

O. F. Barker

(358) *Copyist.*

F | 11 H. Art'y. | U.S.C.T.

Bruster Francis

Rice, Co. I, 14 Reg't R. I. Col'd H. Art'y.*

Appears on

Company Muster Roll

for March April, 1864.

Present or absent Present

Stoppage, $ 100 for

Due Gov't, $ 100 for

Valuation of horse, $ 100

Valuation of horse equipments, $ 100

Remarks:

*This organization subsequently became Co. I, 11 Reg't U. S. Col'd Heavy Artillery.

Book mark:

L. A. Harper

(358) *Copyist.*

D | 11 H. Art'y. | U.S.C.T.

Brazier Frances

Civ, Co. D, 8 Reg't U. S. Col'd H. Art'y.*

Appears on

Company Muster Roll

for May & June, 1864.

Present or absent Present

Stoppage, $ 3 20/100 for C. & G. E.

Due Gov't, $ 100 for

Valuation of horse, $ 100

Valuation of horse equipments, $ 100

Remarks:

*This organization subsequently became Co. D, 11 Reg't U. S. Colored Heavy Artillery.

Book mark:

C. A. Burpee

Copyist.

2 Fr | 11 H. Art'y. | U. S. C. T.

Briden Francis

Private, Co. I, 11 Reg't U. S. Col'd H. Art'y.

Appears on

Company Muster Roll

for July & Aug., 1864.

Present or absent Present

Stoppage, $ 100 for

Due Gov't, $ 03/100 for Camp & G. Equip

Valuation of horse, $ 100

Valuation of horse equipments, $ 100

Remarks: $16 pr M from enlistment to April 30th 64. Desr April 19 1861 Forfeited all pay due from Aug. 3 1864 to Nov. 3rd 1864 by sentence of G.C.M.

Book mark:

M. A. Michaels

(358) *Copyist.*

F | 11 H. Art'y. | U. S. C. T.

Prister Francis

Private, Co. I, 11 Reg't U. S. Col'd H. Art'y.

Appears on

Company Muster Roll

for Sept & Oct, 1864.

Present or absent Present

Stoppage, $ 100 for

Due Gov't, $ 03/100 for Camp & Garrison Equipage

Valuation of horse, $ 100

Valuation of horse equipments, $ 100

Remarks: Forfeited all pay due from Aug. 3d-64 to Nov. 3d-64 by Sentence G.C.M.

Book mark:

M. A. Michaels
Copyist.

(358)

F | 11 H. Art'y. | U. S. C. T.

Brister Francis

Private, Co. I, 11 Reg't U. S. Col'd H. Art'y.

Appears on

Company Muster Roll

for Nov & Dec., 1864.

Present or absent Present

Stoppage, $ 100 for

Due Gov't, $ 03/100 for Camp & Garrison Equipage

Valuation of horse, $ 100

Valuation of horse equipments, $ 100

Remarks: Forfeited all pay due from Aug. 3d 1864 to Nov. 3d 1864 by sentence of G.C.M.

Book mark:

M. A. Michaels

(358) *Copyist.*

F | 11 H. Art'y. | U. S. C. T.

Briden Francis

Private, Co. I, 11 Reg't U. S. Col'd H. Art'y.

Appears on

Company Muster Roll

for Jany & Febr, 1865!

Present or absent Present

Stoppage, $ 100 for

Due Gov't, $ 3 06 55/100 for Camp & Garrison Equipage 3 06 Ordnance 65

Valuation of horse, $ 100

Valuation of horse equipments, $ 100

Remarks: $16 per month due from enlistment to April 30th 1864. Free April 19th 1861. Forfeited all pay due from Aug 3d 64 to Nov 3d 64 by Sentence G.C.M. G.O. 31 Series 64 Hd Qrs Dis. M.O. La.

Book mark: V 31 P. 200 - 68

(358) M. A. Michaels Copyist.

7 | 11 H. Art'y. | U. S. C. T.

Bristor Francis

Priv, Co. I, 11 Reg't U. S. Col'd H. Art'y.

Appears on

Company Muster Roll

for Mch & Apr, 1865.

Present or absent present

Stoppage, $ 55/100 for ordnance

306 for C & G E

Due Gov't, $ 100 for

Valuation of horse, $ 100

Valuation of horse equipments, $ 100

Remarks: Inspected all pay due from Aug 3 1864 to Nov 3 1864 by sentence G C M of O no 31 1864 Dep N O La. $6. per month due from enlistment to Apr 30 1864. Free Apr 19. 61

Book mark:

Moy

(358) *Copyist.*

F | 11 H. Art'y. | U. S. C. T.

Brister Francis

Pi, Co. I, 11 Reg't U. S. Col'd H. Art'y.

Appears on

Company Muster Roll

for May & June, 186 5.

Present or absent Present

Stoppage, $ 100 for

Due Gov't, $ 100 for

Valuation of horse, $ 100

Valuation of horse equipments, $ 100

Remarks:

Book mark:

Donnelly

(358) *Copyist.*

F | 11 H. Art'y. | U. S. C. T.

Brisler Francis

Pvt, Co. I, 11 Reg't U. S. Col'd H. Art'y.

Appears on

Company Muster Roll

for July & Aug, 186 5.

Present or absent Present

Stoppage, $ 100 for

Due Gov't, $ 100 for

Valuation of horse, $ 100

Valuation of horse equipments, $ 100

Remarks:

Book mark:

Donnelly

(358) *Copyist.*

BF | 11 H. Art'y. | **U.S.C.T.**

Francis Brisler

Pri, Co. I, 11 Reg't U. S. Col'd H. Art'y.

Appears on **Co. Muster-out Roll,** dated Camp Parapet La, Oct 2, 186 5.

Muster-out to date Oct 2, 186 5.

Last paid to Feb 28, 186 5.

Clothing account:

Last settled ....., 186 ; drawn since $ 100

Due soldier $ ..... 100 ; due U. S. $ 32 34/100

Am't for cloth'g in kind or money adv'd $ 100

Due U. S. for arms, equipments, &c., $ 45/100

" " " " retained 1 6

Bounty paid $ nine 100 ; due $ 100 100

Remarks: Joined at org'l org'n. 1 Musket & set of accoutrements retained. Lost 1 screw driver, 1 wiper, 1 tompion

× Corrected by Adj Gen's Off V 31 P 200 168 171/84

Donnelly

(361) *Copyist.*

Francis, Bruster

P., I., 11 Reg't 26th N.C.

3 Enclosures.

Bed Cards	Final Statements
Burial Records	Furloughs or L. of A
Certs. of Dis. for Discharge	Med. Certificates
C. M. Charges 1	Med. Des. Lists
Descriptive Lists	Orders
Discharge Certificates	Pris. of War Record
Enlistment Papers 1	Resignations

Other papers relating to—

Admission to Hosp'l	Furlough or L. of A
Casualty Sheet	Med. Examination
Confinement 1	Misc. Information
Contracts	Pay or Clothing
Death or Effects	Personal Reports
Desertion	Rank
Discharge from Hosp'l	Transfer to Hosp'l
Discharge from Service	Transfer to V. R. C.
Duty	Transportation

DECLARATION OF RECRUIT.

I, Brister Francis desiring to VOLUNTEER as a Soldier in the *ARMY OF THE UNITED STATES*, for the term of three years do declare that I am 18 years and months of age; that I have never been discharged from the United States service on account of disability or by sentence of a court martial, or by order, before the expiration of a term of enlistment; and I know of no impediment to my serving honestly and faithfully as a soldier for three years

Given at Providence RI
The 13 day of Nov 1863

Witness:
James S Burch

his
Brister X Francis
mark

No. 1

Brister Francis

Volunteered at Providence RI, 13 Nov, 1863

By Maj. Comstock

Regiment of Artillery

Reg't of

enlistment; last served in Company ( ) ( )

Discharged 18

RECEIVED
DEC 11 1871

CONSENT IN CASE OF MINOR.

I, Do CERTIFY that I am the of ; that the said is years of age; and I do hereby freely give my CONSENT to his volunteering as a SOLDIER in the ARMY OF THE UNITED STATES for the period of

Given at
The day of

Witness:

VOLUNTEER ENLISTMENT.

State of Rhode Island Town of Providence

I, Brister Francis born in New Rochell

in the State of New York aged 18 years, and by occupation

a farmer DO HEREBY ACKNOWLEDGE to have volunteered this 13

day of Nov 1863 to serve as a SOLDIER in the ARMY OF THE UNITED STATES OF AMERICA, for the period of three years, unless sooner discharged by proper authority: Do also agree to accept such bounty, pay, rations and clothing, as are, or may be, established, by law for volunteers. And I, Brister Francis do solemnly swear, that I will bear true faith and allegiance to the *United States of America*, and that I will serve them honestly and faithfully against all their enemies or opposers whomsoever; and that I will observe and obey the orders of the President of the United States, and the orders of the officers appointed over me, according to the Rules and Articles of War.

Sworn and Subscribed to, at Providence
this 13 day of Nov 1863
BEFORE me Thomas Greene
Justice of the Peace

Brister his X Francis
mark

I CERTIFY, ON HONOR, That I have carefully examined the above-named Volunteer, agreeable to the General Regulations of the Army, and that, in my opinion, he is free from all bodily defects and mental infirmity, which would, in any way, disqualify him from performing the duties of a soldier.

Johnson Gardner M.D.

EXAMINING SURGEON.

I CERTIFY, ON HONOR, That I have minutely inspected the Volunteer, Brister Francis previously to his enlistment, and that he was entirely sober when enlisted; that to the best of my judgment and belief, he is of lawful age; and that, in accepting him as duly qualified to perform the duties of an able-bodied soldier, I have strictly observed the Regulations which govern the recruiting service. This soldier has Black eyes Black hair

African *complexion*, is 5 *feet*, 4 *inches high*.

14 *Regiment of* Hey Artly *Volunteers*,

RECRUITING OFFICER.

Charges and Specifications
against

Privt Bristo Francis
Co "I" 11th N.Y.C.A. (Hvy)

Not Guilty
to each and all the Charges
Rec'd Balto Md. July 10/63

Charge and Specification preferred against Privat Bristes Francis Co. "I" 11th N.S.C.A. (Zt.).

Charge— "Sleeping on Post."

Specification— That Privat Bristes Francis Co. "I" 11th N.S.C.A. (Zt). having been duly posted as a sentinel was found asleep on his post between the hours of 4 and 5 A.M. when visited by the Sergeant of the guard

This at Camp Parapet La. on or about the 3rd day of July 1865.

A. F. Cameron
1st Lt 11th N.S.C.A. (Zt).
Officer preferring charge.

Witnesses
Sergt. John F Collins Co. "I" 11th N.S.C.A. (Zt).
Privat Calvin Percell " " "

Mr Robinson

Broker Powers

1 C S & M W St Cincy

Adjutant General's Office,

COLORED TROOPS BRANCH,

Nov 29th, 1875

Mr Ellenbrook Vol. C. T., 187

Wanted in the case of Brister Francis, Co. I,

11 **Reg't** U.S.C. Arty (Hy)

Copy of General Court Martial

Muster Rolls for July & Aug & 64

reports him Present "Forfeit all pay due from Aug 3/64

to Nov 3/64 by sentence of G.C.M." J

Respectfully,

I. A. Woodward

Chief Clerk.

Pr. H J

Adjutant General's Office,

Division of Discontinued Commands.

Nov 29th, 1875

Vol. C. T., 187

Reply in case of Brister Francis, Co. D,

11 "Reg't U. S. C. A. (Hy) —

G.O. No 19 Hdqrs Defences New Orleans July 14. "64 —

Charge 1st — Disobedience of Orders — 2d Deserting

his Post — Findings — 1st Charge — Not Guilty — 2d —

Guilty — Sentence — To be confined at hard Labor ~~for~~

with a loss of all pay thereon for a period of

3 months — Approved —

Tries as of Co "D" 14th R.I. Hy Arty —

(Ret.

Index 223

[illegible], 11 U.S.Col'd H.Art'y.

Private	Private

CARD NUMBERS.

1	6 1 9 6 0 8 9	26	
2	6 1 9 6 2 4 7	27	
3	6 1 9 6 3 9 3	28	
4	6 1 9 6 5 4 8	29	
5	6 1 9 6 7 0 4	30	
6	6 1 9 6 8 5 1	31	
7	6 1 9 7 0 0 2	32	
8	6 1 9 7 1 5 0	33	
9	6 1 9 7 2 7 5	34	
10	6 1 9 7 3 9 7	35	
11	6 1 9 7 5 0 7	36	
12	6 1 9 7 6 2 3	37	
13	6 1 9 7 7 5 0	38	
14	9 1 2 5 4 8 7	39	
15		40	
16		41	
17		42	
18		43	
19		44	
20		45	
21		46	
22		47	
23		48	
24		49	
25		50	

Book Mark: 1408 - C.T. - 1881

See also

MAR 23

S1426907-P.O. Mon

J. A. Mark

F | 11 H. Art'y. | U.S.C.T.

Charles H. Francis

, Co. I, 11 Reg't U. S. Col'd H. Art'y.

Appears on

Company Descriptive Book

of the organization named above.

DESCRIPTION.

Age 20 years; height 5 feet 5 inches.

Complexion DK

Eyes Blk; hair Blk

Where born Bushtown N.J.

Occupation Farmer

ENLISTMENT.

When Nov 2, 186 .

Where Prov R.I.

By whom J.B. Engly; term 3 y'rs.

Remarks: Mustered out

Griffith

(3836) Copyist.

F | 11 H. Art'y. | U.S.C.T.

Charles H. Francis

Priv., Co. D, 14 Reg't R. I. Col'd H. Art'y.*

Age 20 years.

Appears on

Company Muster-in Roll

of the organization named above. Roll dated Providence R.I. Nov 28, 186 3.

Muster-in to date Nov 28, 186 3.

Joined for duty and enrolled:

When Nov. 2, 186 3.

Where Providence R.I.

Period 3 years.

Valuation of horse, $ 100

Valuation of horse equipments, $ 100

Remarks: 1st Lieut. R. I.

* This organization subsequently became Co. I, 11 Reg't U. S. Colored Heavy Artillery.

Book mark:

C. A. Harper

F | 11 H. Art'y. | U.S.C.T.

Charles H Francis

Pvt, Co. I, 14 Reg't R. I. Col'd H. Art'y.*

Appears on

Company Muster Roll

for Nov 2 & Feb Dec 91, 186 3.

Present or absent Present

Stoppage, $.....100 for .....

.....

Due Gov't, $.....100 for .....

.....

Valuation of horse, $.....100

Valuation of horse equipments, $.....100

Remarks: .....

.....

.....

.....

.....

.....

.....

*This organization subsequently became Co. I, 11 Reg't U. S. Col'd Heavy Artillery.

Book mark: .....

.....

C P Bowker

(358) *Copyist.*

2nd | 11 H. Art'y. | U.S.C.T.

Charles Frances

Priv., Co. I, 14 Reg't R. I. Col'd H. Art'y.*

Appears on

Company Muster Roll

for Jan & Feb, 1864.

Present or absent Present

Stoppage, $ 100 for

Due Gov't, $ 100 for

Valuation of horse, $ 100

Valuation of horse equipments, $ 100

Remarks:

*This organization subsequently became Co. I, 11 Reg't U. S. Col'd Heavy Artillery.

Book mark:

C. A. Barker

(358) *Copyist.*

I | 11 H. Art'y. | U.S.C.T.

Charles H Francis

Pvt, Co. I, 14 Reg't R. I. Col'd H. Art'y.*

Appears on

Company Muster Roll

for March & April, 1864.

Present or absent Present

Stoppage, $ 100 for

Due Gov't, $ 100 for

Valuation of horse, $ 100

Valuation of horse equipments, $ 100

Remarks:

*This organization subsequently became Co. I, 11 Reg't U. S. Col'd Heavy Artillery.

Book mark:

C. W. Harper

(358) *Copyist.*

F | 11 H. Art'y. | U.S.C.T.

Charles J. Francis

Priv., Co. L, 8 Reg't U. S. Col'd H. Art'y.*

Appears on

Company Muster Roll

for May & June, 1864.

Present or absent Present

Stoppage, $ 100 for

Due Gov't, $ 100 for

Valuation of horse, $ 100

Valuation of horse equipments, $ 100

Remarks:

† This organization subsequently became Co. L, 11 Reg't U. S. Colored Heavy Artillery.

Book mark:

C A Harper

Copyist.

F | 11 H. Art'y. | U. S. C. T.

Charles H. Francis

Private, Co. I, 11 Reg't U. S. Col'd H. Art'y.

Appears on

Company Muster Roll

for July & Aug., 1864.

Present or absent Present

Stoppage, $ 100 for

Due Gov't, $ 2 94/100 for Camp & C. Equip.

Valuation of horse, $ 100

Valuation of horse equipments, $ 100

Remarks: $6 p'm. from enlistment to April 30/1864.

Book mark:

M. A. Michaels

(358) *Copyist.*

F | 11 H. Art'y. | U. S. C. T.

Charles H. Francis

Private, Co. I, 11 Reg't U. S. Col'd H. Art'y.

Appears on

Company Muster Roll

for Sept & Oct, 1864.

Present or absent Present

Stoppage, $ 100 for

Due Gov't, $ 2 34/100 for Camp & Garrison Equipage

Valuation of horse, $ 100

Valuation of horse equipments, $ 100

Remarks:

Book mark:

M. A. Michaels

(358) *Copyist.*

F | 11 H. Art'y. | U. S. C. T.

Charles H. Francis

Private, Co. I, 11 Reg't U. S. Col'd H. Art'y.

Appears on

Company Muster Roll

for Nov & Dec., 1864.

Present or absent Present

Stoppage, $ 100 for

Due Gov't, $ 2 34/100 for Camp & Garrison Equipage

Valuation of horse, $ 100

Valuation of horse equipments, $ 100

Remarks:

Book mark:

(358) M A Michaels
Copyist.

F | 11 H. Art'y. | U. S. C. T.

Charles H. Francis

Private, Co. I, 11 Reg't U. S. Col'd H. Art'y.

Appears on

Company Muster Roll

for Jan & Febr, 186 5.

Present or absent Present

Stoppage, $ 100 for

Due Gov't, $ 2 41/100 for Canteen & Garrison Equipage

Valuation of horse, $ 100

Valuation of horse equipments, $ 100

Remarks:

Book mark:

(358) M. A. Michaels
Copyist.

F | 11 H. Art'y. | U. S. C. T.

Charles H. Francis

Pri., Co. I, 11 Reg't U. S. Col'd H. Art'y.

Appears on

Company Muster Roll

for Mch & Apr, 1865.

Present or absent present

Stoppage, $ 2 41/100 for Ordnance

Due Gov't, $ 100 for

Valuation of horse, $ 100

Valuation of horse equipments, $ 100

Remarks:

Book mark:

(358) Moy *Copyist.*

F | 11 H. Art'y. | U. S. C. T.

Charles H. Francis

Pri, Co. I, 11 Reg't U. S. Col'd H. Art'y.

Appears on

Company Muster Roll

for May & June, 1865.

Present or absent Present

Stoppage, $ 100 for

Due Gov't, $ 100 for

Valuation of horse, $ 100

Valuation of horse equipments, $ 100

Remarks:

Book mark:

Connelly

(358) *Copyist.*

F | 11 H. Art'y. | U. S. C. T.

Charles H. Francis

Pri, Co. I, 11 Reg't U. S. Col'd H. Art'y.

Appears on

Company Muster Roll

for July & Aug, 186 5.

Present or absent Present

Stoppage, $ 100 for

Due Gov't, $ 100 for

Valuation of horse, $ 100

Valuation of horse equipments, $ 100

Remarks:

Book mark:

Donnelly

(358) *Copyist.*

F

11 H. Art'y. | U.S.C.T.

Charles H. Francis

Pri., Co. I, 11 Reg't U. S. Col'd H. Art'y.

Appears on **Co. Muster-out Roll,** dated Camp Parapet La, Oct 2, 186 5.

Muster-out to date Oct 2, 186 5.

Last paid to Feb 28, 186 5.

Clothing account:

Last settled ....., 186 ; drawn since $ 100

Due soldier $ 6 45 100; due U. S. $ 100

Am't for cloth'g in kind or money adv'd $ 100

Due U. S. for arms, equipments, &c., $ retained 6 100

Bounty paid $ none 100; due $ 100 100

Remarks: Joined at org'l org'n. / musket & accoutrements retained

Book mark: 1408 C. T. - 1881

Donnelly

(361) *Copyist.*

Francis Charles K

C, Co. ——, 11 Reg't Md Cav

1 **Enclosures.**

Bed Cards	Final Statements
Burial Records	Furloughs or L. of A.
Certs. of Dis. for Discharge	Med. Certificates
C. M. Charges	Med. Des. Lists
Descriptive Lists	Orders
Discharge Certificates	Pris. of War Record
Enlistment Papers 1	Resignations

Other papers relating to—

Admission to Hosp'l	Furlough or L. of A.
Casualty Sheet	Med. Examination
Confinement	Misc. Information
Contracts	Pay or Clothing
Death or Effects	Personal Reports
Desertion	Rank
Discharge from Hosp'l	Transfer to Hosp'l
Discharge from Service	Transfer to V. R. C.
Duty	Transportation

DECLARATION OF RECRUIT.

I, Charles H. Francis desiring to VOLUNTEER as a Soldier in the *ARMY OF THE UNITED STATES*, for the term of three years do declare that I am 20 years and months of age; that I have never been discharged from the United States service on account of disability or by sentence of a court martial, or by order, before the expiration of a term of enlistment; and I know of no impediment to my serving honestly and faithfully as a soldier for three years

Given at Providence R. I.

The second day of Nov 1863

Witness:

J. M. Adamson

Charles H. Francis

No. 32

Enlisted by Lieut Edwards

Volunteered at Office

Office 24 "

By U. S. Army

1863

14th Regiment of Heavy Artillery

Reg't of

enlistment; last served in Company ( ) under

Discharged

18

RECEIVED Jan 11 1871

CONSENT IN CASE OF MINOR.

I, Do Certify that I am the

of ; that the said

is years of age; and I do hereby freely give

my CONSENT to his volunteering as a SOLDIER in the ARMY OF THE UNITED STATES for the period of

Given at

The day of

Witness

VOLUNTEER ENLISTMENT.

State of Rhode Island Town of Providence

I, Charles H. Francis born in Charlestown

in the State of New Jersey aged 20 years, and by occupation

a farmer DO HEREBY ACKNOWLEDGE to have volunteered this second

day of november 1863 to serve as a SOLDIER in the ARMY OF THE UNITED STATES OF AMERICA, for the period of three years, unless sooner discharged by proper authority: Do also agree to accept such bounty, pay, rations and clothing, as are, or may be, established, by law for volunteers. And I, Charles H Francis do solemnly swear, that I will bear true faith and allegiance to the *United States of America*, and that I will serve them honestly and faithfully against all their enemies or opposers whomsoever; and that I will observe and obey the orders of the President of the United States, and the orders of the officers appointed over me, according to the Rules and Articles of War.

Sworn and Subscribed to, at Prov R I

this 28 day of May 1863

BEFORE J H Shelley Charles H Francis

Justice of Peace

I CERTIFY, ON HONOR, That I have carefully examined the above-named Volunteer, agreeable to the General Regulations of the Army, and that, in my opinion, he is free from all bodily defects and mental infirmity, which would, in any way, disqualify him from performing the duties of a soldier.

Johnson Sundre & M. D.

EXAMINING SURGEON.

I CERTIFY, ON HONOR, That I have minutely inspected the Volunteer, Charles H Francis previously to his enlistment, and that he was entirely sober when enlisted; that to the best of my judgment and belief, he is of lawful age; and that, in accepting him as duly qualified to perform the duties of an able-bodied soldier, I have strictly observed the Regulations which govern the recruiting service. This soldier has black *eyes* black *hair*, dark *complexion*, is five *feet*, 5 *inches high*.

14th *Regiment of* Hy Arty *Volunteers*,

RECRUITING OFFICER.

Lance. Chas.

Co K, 11 U.S.Col'd H. Art'y

Private	Private

CARD NUMBERS.

1	6199736	26	
2	6199895	27	
3	6200050	28	
4	6200202	29	
5	6200344	30	
6	6200482	31	
7	6200611	32	
8	6200741	33	
9	6200871	34	
10	6200994	35	
11	6201118	36	
12	6201231	37	
13	9125788	38	
14		39	
15		40	
16		41	
17		42	
18		43	
19		44	
20		45	
21		46	
22		47	
23		48	
24		49	
25		50	

Book Mark:

&1933966 DOMKM
S261v47 Anl. M.D.
A.G. 1710298

J.D. Mark
Cpt.

F. | 11 H. Art'y. | U.S.C.T.

Charles L. Francis

, Co. L, 11 Reg't U. S. Col'd H. Art'y.

Appears on

Company Descriptive Book

of the organization named above.

DESCRIPTION.

Age 30 years; height 5 feet 9 inches.

Complexion African

Eyes Blk; hair Blk

Where born Oswego Co N.Y.

Occupation Laborer

ENLISTMENT.

When Dec 5, 1863.

Where Prov R.I.

By whom J.B. Engly; term 3 y'rs.

Remarks: Mustered out Oct 2 '1865

Greffich

(383y) *Copyist.*

1st | 11 H. Art'y. | U.S.C.T.

Charles L. Francis

Pvt., Co. L, 14 Reg't R. I. Col'd H. Art'y.*

Age 30 years.

Appears on

Company Muster-in Roll

of the organization named above. Roll dated Camp Ms Providence R.I. Dec 31, 1863.

Muster-in to date Dec 31, 1863.

Joined for duty and enrolled:

When Dec 5, 1863.

Where Providence R I.

Period 3 years.

Valuation of horse, $ 100

Valuation of horse equipments, $ 100

Remarks: Resident 1st Dist R.I.

* This organization subsequently became Co. L, 11 Reg't U. S. Colored Heavy Artillery.

Book mark:

D. L. Edwards

(356) Copyist.

Ft | 11 H. Art'y. | U.S.C.T.

Charles L. Francis

Jer, Co. L, 14 Reg't R. I. Col'd H. Art'y.*

Appears on

Company Muster Roll

for Jan & Feb, 186 4.

Present or absent Present

Stoppage, $ 100 for

Due Gov't, $ 100 for

Valuation of horse, $ 100

Valuation of horse equipments, $ 100

Remarks:

* This organization subsequently became Co. L, 11 Reg't U. S. Colored Heavy Artillery.

Book mark:

(358) C. B. C. Edwards
Copyist.

I | 11 H. Art'y. | U.S.C.T.

Charles L. Francis

Pvt., Co. L, 14 Reg't R. I. Col'd H. Art'y.*

Appears on

Company Muster Roll

for Mar. & Apr., 1864.

Present or absent Present

Stoppage, $.....100 for .....

.....

Due Gov't, $.....100 for .....

.....

Valuation of horse, $.....100

Valuation of horse equipments, $.....100

Remarks:.....

.....

.....

.....

.....

.....

.....

* This organization subsequently became Co. L, 11 Reg't U. S. Colored Heavy Artillery.

Book mark:.....

Mauley

(358) *Copyist.*

Charles L. Francis

Jvt., Co. L, 8 Reg't U. S. Col'd H. Art'y.*

Appears on

Company Muster Roll

for May & June, 1864.

Present or absent Present

Stoppage, $ 100 for

Due Gov't, $ 100 for

Valuation of horse, $ 100

Valuation of horse equipments, $ 100

Remarks:

† This organization subsequently became Co. L, 11 Reg't U. S. Colored Heavy Artillery.

Book mark:

A. B. St. Edwards

Copyist.

F | 11 H. Art'y. | U.S.C.T.

Charles L. Francis

Pvt, Co. L, 11 Reg't U. S. Col'd H. Art'y.

Appears on

Company Muster Roll

for July & Aug, 1864.

Present or absent Present

Stoppage, $ 100 for

Due Gov't, $ 100 for

Valuation of horse, $ 100

Valuation of horse equipments, $ 100

Remarks: $6 per mo. back pay due from enlistment to Apr 30/64. Free on Apr 19/61

Book mark:

Maudsley

(358) Copyist.

F. | 11 H. Art'y. | U.S.C.T.

Charles L. Francis.

Pvt., Co. L, 11 Reg't U. S. Col'd H. Art'y.

Appears on

Company Muster Roll

for Sept & Oct., 1864.

Present or absent present.

Stoppage, $ 100 for

Due Gov't, $ 100 for

Valuation of horse, $ 100

Valuation of horse equipments, $ 100

Remarks: $6.00 per month back pay due from enlistment to April 30/64. Free on April 19/61.

Book mark:

Baker,

(358) *Copyist.*

F. | 11 H. Art'y. | U.S.C.T.

Charles L. Francis

Pvt., Co. L, 11 Reg't U. S. Col'd H. Art'y.

Appears on

Company Muster Roll

for Nov & Dec., 1864.

Present or absent present.

Stoppage, $ 100 for

Due Gov't, $ 100 for

Valuation of horse, $ 100

Valuation of horse equipments, $ 100

Remarks:

Book mark:

Baker,
Copyist.

(358)

F. | 11 H. Art'y. | U.S.C.T.

Charles L. Francis.

Pvt., Co. L, 11 Reg't U. S. Col'd H. Art'y.

Appears on

Company Muster Roll

for Jan & Feb., 1865.

Present or absent present.

Stoppage, $ — 23/100 for ordnance.

Due Gov't, $ 100 for

Valuation of horse, $ 100

Valuation of horse equipments, $ 100

Remarks:

Book mark:

Baker,
Copyist.

(358)

F. | 11 H. Art'y. | U.S.C.T.

Charles L. Francis.

Pvt., Co. L, 11 Reg't U. S. Col'd H. Art'y.

Appears on

Company Muster Roll

for March & April, 1865.

Present or absent present.

Stoppage, $ 100 for

Due Gov't, $ 100 for

Valuation of horse, $ 100

Valuation of horse equipments, $ 100

Remarks:

Book mark:

Baker,
Copyist.

In | 11 H. Art'y. | U.S.C.T.

Charles L. Francis

Pvt., Co. L, 11 Reg't U. S. Col'd H. Art'y.

Appears on

Company Muster Roll

for May & June, 1865.

Present or absent Present

Stoppage, $ 100 for

Due Gov't, $ 100 for

Valuation of horse, $ 100

Valuation of horse equipments, $ 100

Remarks:

Book mark:

(358) Murphy

Copyist.

F | 11 H. Art'y. | U.S.C.T.

Charles L. Francis

Pvt, Co. L, 11 Reg't U. S. Col'd H. Art'y.

Appears on

Company Muster Roll

for July & Aug, 1865.

Present or absent Present

Stoppage, $ 100 for

Due Gov't, $ 100 for

Valuation of horse, $ 100

Valuation of horse equipments, $ 100

Remarks:

Book mark:

(358) Murphy Copyist.

F. | 11 H. Art'y. | U.S.C.T.

Charles L. Francis

Pvt., Co. L, 11 Reg't U. S. Col'd H. Art'y.

Appears on Co. Muster-out Roll, dated New Orleans La, Oct 2, 1865.

Muster-out to date Oct 2, 1865.

Last paid to Feb 28, 1865.

Clothing account:

Last settled ....., 186 ; **drawn since $** 100

Due soldier $ 12 00 100 ; **due U. S. $** 100

Am't for cloth'g in kind or money adv'd $ 100

Due U. S. for arms, equipments, &c., $ 100

Bounty paid $ ..... 100 ; **due $** 100 100

Remarks: Joined at Ogl Agn Stoppage for 1 Musket & accts retained $6.00

Book mark: 436248

Murphy

(361) *Copyist.*

Francis Charles L.

P, Co. ——, 11 Reg't Mass Inf

1 Enclosures.

Bed Cards	Final Statements
Burial Records	Furloughs or L. of A.
Certs. of Dis. for Discharge	Med. Certificates
C. M. Charges	Med. Des. Lists
Descriptive Lists	Orders
Discharge Certificates	Pris. of War Record
Enlistment Papers /	Resignations

Other papers relating to—

Admission to Hosp'l	Furlough or L. of A.
Casualty Sheet	Med. Examination
Confinement	Misc. Information
Contracts	Pay or Clothing
Death or Effects	Personal Reports
Desertion	Rank
Discharge from Hosp'l	Transfer to Hosp'l
Discharge from Service	Transfer to V. R. C.
Duty	Transportation

DECLARATION OF RECRUIT.

I, Chas L Francis desiring to VOLUNTEER as a Soldier in the *ARMY OF THE UNITED STATES*, for the term of 3 years do declare that I am 20 years and months of age; that I have never been discharged from the United States service on account of disability or by sentence of a court martial, or by order, before the expiration of a term of enlistment; and I know of no impediment to my serving honestly and faithfully as a soldier for 3 years

Given at Providence

The 5th day of Dec 1863

Witness: J W Ashyn

his
Charles X L Frances
mark

No. 33

Chas L Francis

Volunteered at Providence

Dec 5 1863,

By P C Dudley Esq

14 Regiment of Heavy Artillery

enlistment; last served in Company ( )

Reg't

Discharged

18

JUL 11 1871

CONSENT IN CASE OF MINOR.

I, Do Certify that I am the

of ; that the said

is years of age; and I do hereby freely give

my CONSENT to his volunteering as a SOLDIER in the ARMY OF THE UNITED STATES for the period of

Given at

The day of

Witness

VOLUNTEER ENLISTMENT.

State of Rhode Island Town of Providence

I, Chas L Francis born in Oswego Co

in the State of New York aged 30 years, and by occupation

a Laborer DO HEREBY ACKNOWLEDGE to have volunteered this 5th

day of Dec 18 63 to serve as a SOLDIER in the ARMY OF THE UNITED STATES OF AMERICA, for the period of 3 years, unless sooner discharged by proper authority: Do also agree to accept such bounty, pay, rations and clothing, as are, or may be, established, by law for volunteers. And I, Chas L Francis do solemnly swear, that I will bear true faith and allegiance to the *United States of America*, and that I will serve them honestly and faithfully against all their enemies or opposers whomsoever; and that I will observe and obey the orders of the President of the United States, and the orders of the officers appointed over me, according to the Rules and Articles of War.

Sworn and Subscribed to, at Providence R.I.

this 5th day of Dec 18 63 Chas L Francis his mark

BEFORE Mr John L Ayres Public Notary

I CERTIFY, ON HONOR, That I have carefully examined the above-named Volunteer, agreeable to the General Regulations of the Army, and that, in my opinion, he is free from all bodily defects and mental infirmity, which would, in any way, disqualify him from performing the duties of a soldier.

Johnson Gardner M.D.

EXAMINING SURGEON.

I CERTIFY, ON HONOR, That I have minutely inspected the Volunteer, Chas L Freeman previously to his enlistment, and that he was entirely sober when enlisted; that to the best of my judgment and belief, he is of lawful age; and that, in accepting him as duly qualified to perform the duties of an able-bodied soldier, I have strictly observed the Regulations which govern the recruiting service. This soldier has

Africa *complexion*, is 5 *feet*, 9 1/4 *inches high*. Black *eyes* Black *hair*

14th *Regiment of* H Artly *Volunteers*,

RECRUITING OFFICER.

9, 11 U.S.Col'd H.Art.

Private	Private

CARD NUMBERS.

6182196	26
6182342	27
6182494	28
6182635	29
6182772	30
6182903	31
6183044	32
6183233	33
6183771	34
9123808	35
9123959	36
	37
	38
	39
	40
	41
	42
	43
	44
	45
	46
	47
	48
	49
	50

Book Mark:

See also

F | 11 H. Art'y. | U.S.C.T.

Don Francis

....., Co. A, 11 Reg't U. S. Col'd H. Art'y.

Appears on

Company Descriptive Book

of the organization named above.

DESCRIPTION.

Age 22 years; height 5 feet 5 inches.

Complexion Mulatto

Eyes Hazel; hair Brown

Where born Providence R I

Occupation Laborer

ENLISTMENT.

When Aug 3, 1863.

Where Providence

By whom W H Helm; term 3 y'rs.

Remarks: Descharged by Surgeons certificate Fort Jackson La Dec 10. 64. Final Vaulents furnished Dec 10/64

Dann

(3837) Copyist.

F | 11 H. Art'y. | U.S.C.T.

Don Francis

_____, Co. A, 11 Reg't U. S. Col'd H. Art'y.

Appears on

Company Descriptive Book

of the organization named above.

DESCRIPTION.

Age 22 years; height 5 feet 5 inches.

Complexion Mulatto

Eyes Hazel; hair Brown

Where born Providence R I.

Occupation Laborer

ENLISTMENT.

When Aug 3, 1863.

Where Providence

By whom Wm Helme; term 3 y'rs.

Remarks: Discharged by Surgeons certificate Dec 10. 64. Final Statements rend'd

Francis

(3830) Copyist.

A | 11 H. Art'y. | U.S.C.T.

Pvt. John Francis

Pvt., Co. A, 14 Reg't R. I. Col'd H. Art'y.*

Age 22 years.

Appears on

Company Muster-in Roll

of the organization named above. Roll dated Camp Smith near Providence R. I., Aug 28, 1863.

Muster-in to date Aug 28, 1863.

Joined for duty and enrolled:

When July 3, 1863.

Where Providence

Period 3 years.

Valuation of horse, $ 100

Valuation of horse equipments, $ 100

Remarks: 1st District

* This organization subsequently became Co. A, 11 Reg't U. S. Colored Heavy Artillery.

Book mark:

Prewitt

Copyist.

F | 11 H. Art'y. | U.S.C.T.

Don Francis

Pvt., Co. A, 14 Reg't R. I. Col'd H. Art'y.*

Appears on

Company Muster Roll

for Aug 28 to Dec 31, 1863.

Present or absent Present

Stoppage, $ 100 for

Due Gov't, $ 100 for

Valuation of horse, $ 100

Valuation of horse equipments, $ 100

Remarks:

*This organization subsequently became Co. A, 11 Reg't U. S. Colored Heavy Artillery.

Book mark:

Prewitt

Copyist.

11 H. Art'y. | U.S.C.T.

Don Francis

Pvt., Co. A, 14 Reg't R. I. Col'd H. Art'y.*

Appears on

Company Muster Roll

for Jan & Feb, 1864.

Present or absent Present

Stoppage, $ 100 for

Due Gov't, $ 100 for

Valuation of horse, $ 100

Valuation of horse equipments, $ 100

Remarks:

*This organization subsequently became Co. A, 11 Reg't U. S. Colored Heavy Artillery.

Book mark:

Prewitt

Copyist.

F | 11 H. Art'y. | U.S.C.T.

Don Francis

Pvt., Co. A, 14 Reg't R. I. Col'd H. Art'y.*

Appears on

Company Muster Roll

for Mch & Apl, 1864.

Present or absent Absent

Stoppage, $ 100 for

Due Gov't, $ 100 for

Valuation of horse, $ 100

Valuation of horse equipments, $ 100

Remarks: In arrest at Matagorda Island, Texas

*This organization subsequently became Co. A, 11 Reg't U. S. Colored Heavy Artillery.

Book mark:

(358) P Prendle

Copyist.

F | 11 H. Art'y. | U.S.C.T.

Don Francis

Pvt., Co. A, 8 Reg't U. S. Col'd H. Art'y.*

Appears on

Company Muster Roll

for May & June, 1864.

Present or absent Present

Stoppage, $ 100 for

Due Gov't, $ 100 for

Valuation of horse, $ 100

Valuation of horse equipments, $ 100

Remarks:

† This organization subsequently became Co. C, 11 Reg't U. S. Colored Heavy Artillery.

Book mark:

Prewitt

A | 11 H. Art'y. | U.S.C.T.

Asa Francis

R., Co. A, 11 Reg't U. S. Col'd H. Art'y.

Appears on

Company Muster Roll

for July & Aug., 1864.

Present or absent Present

Stoppage, $ 100 for

Due Gov't, $ 100 for

Valuation of horse, $ 100

Valuation of horse equipments, $ 100

Remarks: Order April 19. 1861

Book mark:

(358) Copyist.

A. | **11** H. Art'y. | **U.S.C.T.**

Don't Dramo's

R. ..., Co. A, 11 Reg't U. S. Col'd H. Art'y.

Appears on

Company Muster Roll

for Sept. & Oct., 1864.

Present or absent Present

Stoppage, $ 100 for

Due Gov't, $ 100 for

Valuation of horse, $ 100

Valuation of horse equipments, $ 100

Remarks:

Book **mark**:

R. Fisher

(358) Copyist.

F | 11 H. Art'y. | U.S.C.T.

Don Francis

R., Co. A, 11 Reg't U. S. Col'd H. Art'y.

Appears on

Company Muster Roll

for Nov. & Dec., 1864.

Present or absent.....

Stoppage, $ 3 27/100 for C. & G. E.

.....

Due Gov't, $ 00/100 for .....

.....

.....

Valuation of horse, $ 00/100

Valuation of horse equipments, $ 00/100

Remarks: Discharged

on Surgeons Certificate

of Dec. 10" 1864

.....

.....

.....

.....

.....

.....

Book mark: .....

.....

(358)

Copyist.

F. | 11 H. Art'y. | U.S.C.T.

Don Francis

Pvt., Co. A, 11 Reg't U. S. Col'd H. Art'y.

Appears on **Co. Muster-out Roll,** dated

New Orleans, La., Oct. 2, 1865.

Muster-out to date ....., 186 .

Last paid to ....., 186 .

Clothing account:

Last settled....., 186 ; drawn since $.....100

Due soldier $.....100; due U. S. $.....100

Am't for cloth'g in kind or money adv'd $.....100

Due U. S. for arms, equipments, &c., $.....100

Bounty paid $.....100; due $.....100

Remarks: Joined Regt. Organ. Discharged Dec. 10/64 by order Maj. Gen. Hurlburt, Ft. Jackson, La., for disability

Book mark:

---

(361) R. H. Brauner

Copyist.

Francis, Don

P, Co. A, 11 U.S.C.H.A. Reg't

3 Enclosures.

Bed Cards	Descriptive Lists
Burial Records	Final Statements
Certs. of Dis. for Discharge /	Furloughs
C. M. Charges	Med. Des. Lists
Med. Certificates E. P. /	Orders

Other papers relating to—

Admission to Hosp'l	Furlough
Casualty Sheet (Officer's)	Med. Examination
Confinement	Misc. Information /
Contracts	Pay or Clothing
Death or Effects	Personal Reports
Desertions	Rank
Discharge from Hosp'l	Transfer to Hosp'l
Discharge from Service	Transfer to V. R. C.
Duty	Transportation

DECLARATION OF RECRUIT.

I, Don Francis desiring to VOLUNTEER as a Soldier in the *ARMY OF THE UNITED STATES*, for the term of three years, do declare that I am 33 years and months of age; that I have never been discharged from the United States service on account of disability or by sentence of a court martial, or by order, before the expiration of a term of enlistment; and I know of no impediment to my serving honestly and faithfully as a soldier for the 1st Col. Com. Heavy Artillery.

Given at Providence
The third day of August 1863.

Witness:
Fred. B. Waugh

Don X Francis
mark

No. 34
Don Francis
Volunteered at 11 U.S.C.H.A.
By
Regiment of
enlistment; last served in Company ( ) *under*
Reg't of
Discharged 18

CONSENT IN CASE OF MINOR.

I, Do Certify that I am the
of ; that the said
is years of age; and I do hereby freely give
my CONSENT to his volunteering as a SOLDIER in the ARMY OF THE UNITED STATES for the period of

Given at
The day of

Witness:

VOLUNTEER ENLISTMENT.

State of Rhode Island

Town of Newport

I, Don Francis born in Providence
in the State of Rhode Island aged 22 years, and by occupation
a Laborer DO HEREBY ACKNOWLEDGE to have volunteered this 30
day of August 1863, to serve as a SOLDIER in the ARMY OF THE UNITED STATES
of AMERICA, for the period of three years, unless sooner discharged by proper authority:
Do also agree to accept such bounty, pay, rations and clothing, as are, or may be, established by law for
volunteers. And I, Don Francis do solemnly swear, that I will bear
true faith and allegiance to the *United States of America*, and that I will serve them honestly and faithfully against all their enemies or opposers whomsoever; and that I will observe and obey the orders of
the President of the United States, and the orders of the officers appointed over me, according to the
Rules and Articles of War.

his
Don × Francis
mark

Sworn and subscribed to, at Providence
this 3rd day of August 1863
BEFORE Geo. Palmer
Justice of the Peace

I CERTIFY, ON HONOR, That I have carefully examined the above-named Volunteer, agreeably to the General Regulations of the Army, and that, in my opinion, he is free from all bodily defects and mental infirmity, which would, in any way, disqualify him from performing the duties of a soldier.

Johnson Sanders M.D.

EXAMINING SURGEON.

I CERTIFY, ON HONOR, That I have minutely inspected the Volunteer, Don Francis
previously to his enlistment, and that he was entirely sober when enlisted; that, to the best of my judgment and belief, he is of lawful age; and that, in accepting him as duly qualified to perform the duties of an able-bodied soldier, I have strictly observed the Regulations which govern the recruiting service. This soldier has hazel *eyes*, brown ~~hair~~ *hair*, ~~complexion~~ *complexion*, is 5 *feet*, 5 *inches high*.

nearly bald

1st Lieut. Co. H. 1st
Regiment of R. I. Volunteers.

Wm H Hehre RECRUITING OFFICER.

Mr Sherlock

Dear Sirs

C A U S C Mfg Co

Adjutant General's Office,

COLORED TROOPS BRANCH,

January 4th, 1875

Vol. C. T., 187

Wanted in case of Don Francis, Pvt., *Co.* K,

11 *Reg't* M.S.C. Dry Cks

Cause of confinement "Ab't 1 Inst

Left in M.S.C. Hosp

"& April for return to Command "In arrest at Matagorda

Island Texas"

Respectfully,

Wm Ellerbrook

W. A. Woodward
Chief Clerk.
Per J. Hatton

Adjutant General's Office,

Division of Records & Pensions.

January 18th, 1875.

Vol. C. T., 187

Reply in case of Don Francis, *Co.* "A",

11th Reg't U.S.C.A. Hy.

Co M. R. Bk March 30. 1864 in arrest for sleeping on post — No further record —

Rejt records and G.O. 1st & 13th A.C., 1864, (incomplete) furnish no evidence of trial —

D Bk

EC

Approved Nov 28th 64

P. A. Surgeon U.S.A.

...of recruits, &c., &c.

NOTE 2.

When a *probable* case for *pension, special care* must be taken to state the *degree* of disability—as ½, ⅓, &c., &c.; to describe particularly the disability, wound, or disease; the extent to which it deprives him of the use of any limb or faculty, or affects his health, strength, activity, constitution, or capacity to labor or earn his subsistence. The surgeon will add, from his knowledge of the facts and circumstances, and from the evidence in the case, his professional opinion of the cause or origin of the disability. In the case of discharges by Medical Inspectors, the last paragraph will state that the "discharge was given by consent of the soldier, after a personal examination, and for disability, the nature, degree, and origin of which are correctly described in the within certificate."

Par. 1260 Regulations, Edit. 1861.

Medical officers, in giving certificates of disability, are to take particular care in all cases that have not been under their charge; and especially in epilepsy, convulsions, chronic rheumatism, derangement of the urinary organs, ophthalmia, ulcers, or any obscure disease liable to be feined or purposely produced; and in no case shall such certificate be given until after sufficient time and examination to detect any attempt at deception.

DIRECTIONS.

This certificate will be made out in *duplicate* by the soldier's company commander, or other officer commanding the separate detachment to which he belongs and sent by him to the surgeon who has charge of the hospital where the soldier is sick. The surgeon will then fill out and sign the surgeon's certificate, and forward these papers to the regimental, detachment, or post commander, who will forward them, with his action endorsed thereon, through the proper channel, to his division commander; or, if the troops are not attached to a division, to his corps, department, or other commander or officer to whom the authority to discharge enlisted men may be specially delegated.

These certificates, after having received the action of the higher authority to which they are required to be sent, will be returned through the same channel to the regimental, post, or detachment commander, who will, if the discharge is authorized by the endorsement of the proper authority, sign the soldier's discharge, and the last certificate on this paper; see that the soldier is furnished with the proper final statements in duplicate, and forward BOTH of these certificates direct to the Adjutant General United States Army, Washington, D. C.; they will not under any circumstances be given to the soldier.

ADJUTANT GENERAL'S OFFICE.

Dec 31 1864.

Duplicate sent the Pension Office.

1864 12

CERTIFICATE OF DISABILITY FOR DISCHARGE

No. 291 R Lr

IN THE CASE OF

Dan Francis

a Private Co. A

Eleventh Reg't ~~of~~ U.S.L.A.H.

Dr. Fort Jackson La.

Oct 28. 1864.

Approved and Respectfully forwarded

Surgeon U.S.V.

Comdg

Asst Surgeon U.S.A.

New Drs Hd. Qrs. Adams

New Orleans Oct 31st 64.

Respectfully forwarded

Received (A. G. Office) _____, 186 .

ADJUTANT-GENERAL'S OFFICE RECEIVED Dec 31 1864

Endorsement Refused

Medical Directors Office

Headquarters Dept of the Gulf

New Orleans Nov 2 1864

Respectfully returned Private Dan Francis. will report to Surgeon in charge Corps d Afrique Genl Hospital New Orleans after examination

By Command of Maj Genl Sheridan

P. A. Surgeon

Surgeon U. S. Army

Medical Director

Corps d'Afrique U.S. Gen Hospital

New Orleans La Nov 28 1864

Respectfully returned with the recommendation By Board of Examination, that Private Dan Francis be discharged the Service of the U. States

He is not fit for the Invalid Corps

F. E. Paquette

Surgeon in Charge

Para 13

ARMY OF THE UNITED STATES.

CERTIFICATE

OF DISABILITY FOR DISCHARGE.

Don Francisco Private of Captain Thomas Ways Company, (A) of the Eleventh Regiment of United States C. H. Ac. was enlisted by William H. Hoelme of the ~~the~~ R I Regiment of ~~t~~ ~~t~~ at Providence R I on the Third day of August 1863, to serve Three years; he was born in Providence in the State of Rhode Island is Twenty two years of age, Five feet Five inches high, Mulatto complexion, Hazel eyes, Brown hair, and by occupation when enlisted a Laborer During the last two months said soldier has been unfit for duty 60 days.* The Said Don Francis has been Subject to Fits during his term of Service I have been informed by those who knew him that he had them before he entered the Army

STATION: Fort Jackson La
DATE: October 1864

Geo W Ivy Capt
11th U.S.C.A. H.C.
Commanding Company.

I CERTIFY, that I have carefully examined the said Don Francis of Captain Geo W Ivy Company, and find him incapable of performing the duties of a soldier because of † Epilepsy

Approved on personal examination
John Pondexter Surgeon
7th U.S. Infy & Sen Surg
of the Command

Surgeon.

DISCHARGED, this Tenth day of December 1864 at Fort Jackson La.

E. J. Comstock Jr.
Major 13th A.
Commanding the ~~Regt~~.

The *soldier* desires to be *addressed* at
Town ..... *County* ..... *State* .....

* See Note 1 on the back of this. †See Note 2 on the back of this.

[A. G. O. No. 100 & 101—First.] (DUPLICATES.)

S-698409-P090
D863448 Pat
Pat 5338955
D187618 Pat
P2607433 Aust N.D.

J. D. Marx Et.

F | 11 H. Art'y. | U.S.C.T.

William H. Franklin

, Co. K, 11 Reg't U. S. Col'd H. Art'y.

Appears on

Company Descriptive Book

of the organization named above.

DESCRIPTION.

Age 23 years; height 5 feet 7 inches.

Complexion African

Eyes Dk; hair Blk

Where born N. Y.

Occupation Farmer

ENLISTMENT.

When Dec 2, 186 .

Where Prov R. I.

By whom J. C. Engly; term 3 y'rs.

Remarks: Mustered out Oct 2/65

Griffith

(3536) *Copyist.*

F | 11 H. Art'y. | U.S.C.T.

William H. Franklin

Pt., Co. K, 14 Reg't R. I. Col'd H. Art'y.*

Age 23 years.

Appears on

Company Muster-in Roll

of the organization named above. Roll dated Camp near Providence R.I. Dec 17, 1863.

Muster-in to date Dec 17, 1863.

Joined for duty and enrolled:

When Dec 2, 1863.

Where Providence R. I.

Period 3 years.

Valuation of horse, $100

Valuation of horse equipments, $100

Remarks:

* This organization subsequently became Co. K, 11 Reg't U. S. Colored Heavy Artillery.

Book mark:

J. H. Stewart

Copyist.

9 | 11 H. Art'y. | U.S.C.T.

William H. Franklin

Pt, Co. K, 14 Reg't R. I. Col'd H. Art'y.*

Appears on

Company Muster Roll

for Dec 1/63 Dec 31, 1863

Present or absent Present

Stoppage, $ 100 for

Due Gov't, $ 100 for

Valuation of horse, $ 100

Valuation of horse equipments, $ 100

Remarks:

*This organization subsequently became Co. K, 11 Reg't U. S. Colored Heavy Artillery.

Book mark:

J. H. Stewart

(358) *Copyist.*

F | 11 H. Art'y. | U.S.C.T.

William N. Franklin

Pt, Co. K, 14 Reg't R. I. Col'd H. Art'y.*

Appears on

Company Muster Roll

for Jan & Feb, 1864.

Present or absent Present

Stoppage, $ 100 for

Due Gov't, $ 100 for

Valuation of horse, $ 100

Valuation of horse equipments, $ 100

Remarks:

*This organization subsequently became Co. K, 11 Reg't U. S. Colored Heavy Artillery.

Book mark:

(358) A W Steward

Copyist.

I | 11 H. Art'y. | U.S.C.T.

William N. Franklin

Pt, Co. K, 14 Reg't R. I. Col'd H. Art'y.*

Appears on

Company Muster Roll

for Mch & Apl, 1864.

Present or absent Present

Stoppage, $ 100 for

Due Gov't, $ 100 for

Valuation of horse, $ 100

Valuation of horse equipments, $ 100

Remarks: Stop for wiper $2.0

*This organization subsequently became Co. K, 11 Reg't U. S. Colored Heavy Artillery.

Book mark:

JH Stewart

K | **11 H. Art'y.** | **U.S.C.T.**

Wm K Franklin

Pvt, Co. K, 8 Reg't U. S. Col'd H. Art'y.*

Appears on

Company Muster Roll

for Aug & Sept, 1864.

Present or absent Present

Stoppage, $ 100 for

Due Gov't, $ 100 for

Valuation of horse, $ 100

Valuation of horse equipments, $ 100

Remarks:

† This organization subsequently became Co. K, 11 Reg't U. S. Colored Heavy Artillery.

Book mark:

(358) — Copyist.

F | 11 H. Art'y. | U.S.C.T.

William H Franklin

Prt, Co. K, 11 Reg't U. S. Col'd H. Art'y.

Appears on

Company Muster Roll

for July & Aug, 1864.

Present or absent Present

Stoppage, $ 100 for

Due Gov't, $ 100 for

Valuation of horse, $ 100

Valuation of horse equipments, $ 100

Remarks: Joined 19 Feb'y 64
$16 per month due
from enlistment
to April 30/64.

Book mark:

(358) Copyist.

K | 11 H. Art'y. | U.S.C.T.

William H. Franklin

Pvt., Co. K, 11 Reg't U. S. Col'd H. Art'y.

Appears on

Company Muster Roll

for Oct. & Nov., 1864

Present or absent Present

Stoppage, $ 100 for

Due Gov't, $ 1 49/100 for Camp & Garrison Equipage.

Valuation of horse, $ 100

Valuation of horse equipments, $ 100

Remarks:

Book mark:

(358) Copyist.

F | 11 H. Art'y. | U.S.C.T.

William H. Franklin

Pvt., Co. K, 11 Reg't U. S. Col'd H. Art'y.

Appears on

Company Muster Roll

for Nov & Dec, 1864.

Present or absent.....

Stoppage, $.....100 for .....

.....

Due Gov't, $.....100 for Balance

.....

Valuation of horse, $.....100

Valuation of horse equipments, $.....100

Remarks: Due U.S. for

C. & G. C. $1.42

.....

.....

.....

.....

.....

.....

.....

Book mark: .....

(358) Copyist.

11 H. Art'y. | U.S.C.T.

William H Franklin

Prt, Co. K, 11 Reg't U. S. Col'd H. Art'y.

Appears on

Company Muster Roll

for Jan & Feb, 1865.

Present or absent Present.

Stoppage, $ ---- 100 for ----

Due Gov't, $ 21 100 for Ordnance

Valuation of horse, $ ---- 100

Valuation of horse equipments, $ ---- 100

Remarks: Due U S for Cl & Eq $1.46

Book mark: ----

R Wood

(358) *Copyist.*

F | 11 H. Art'y. | U.S.C.T.

Wm H Franklin

Pvt, Co. K, 11 Reg't U. S. Col'd H. Art'y.

Appears on

Company Muster Roll

for March & April, 1865.

Present or absent Present

Stoppage, $ 100 for

Due Gov't, $ 24/100 for Clothing

Valuation of horse, $ 100

Valuation of horse equipments, $ 100

Remarks: Dues C. S. for

C. & G. C. S. 10

Book mark:

Howard C.

(358) Copyist.

Jt | 11 H. Art'y. | U.S.C.T.

William H. Franklin

Pvt, Co. K, 11 Reg't U. S. Col'd H. Art'y.

Appears on

Company Muster Roll

for May & June, 186 5.

Present or absent Present

Stoppage, $ 100 for

Due Gov't, $ 05/100 for C & E

Valuation of horse, $ 100

Valuation of horse equipments, $ 100

Remarks:

Book mark:

Gracchus

(358) *Copyist.*

F | 11 H. Art'y. | U.S.C.T.

William H. Franklin

Pvt, Co. K, 11 Reg't U. S. Col'd H. Art'y.

Appears on

Company Muster Roll

for July & Aug, 1865.

Present or absent Present

Stoppage, $ 100 for

Due Gov't, $ 05/100 for C & E lost and destroyed

Valuation of horse, $ 100

Valuation of horse equipments, $ 100

Remarks: Due U.S. for Ordnance lost and destroyed 23d

Book mark:

Gmachus

(358) Copyist.

J' | **11** H. Art'y. | **U.S.C.T.**

William H. Franklin

Pvt, Co. K, 11 Reg't U. S. Col'd H. Art'y.

Appears on **Co. Muster-out Roll,** dated New Orleans, La., Oct. 2, 1865.

Muster-out to date Oct 2, 1865.

Last paid to Feb. 28, 1865.

Clothing account:

Last settled ....., 186 ; drawn since $ 100

Due soldier $ ..... 100 ; due U. S. $ 24 46/100

Am't for cloth'g in kind or money adv'd $ 100

Due U. S. for arms, equipments, &c., $ 6 28/100

Bounty paid $ None 100 ; due $ 100 00/100

Remarks: Joined at Original Organ. Stopped 1 Screw driver, 2 Eagles & 1 No. "1" Lost. 1 Musket & Equipments retained

Book mark :

Spreeher

(861) *Copyist.*

Franklin William H.

O, Co. ——, 11 Reg't Ind. Inf.

1 **Enclosures.**

Bed Cards	Final Statements
Burial Records	Furloughs or L. of A.
Certs. of Dis. for Discharge	Med. Certificates
C. M. Charges	Med. Des. Lists
Descriptive Lists	Orders
Discharge Certificates	Pris. of War Record
Enlistment Papers 1	Resignations

Other papers relating to—

Admission to Hosp'l	Furlough or L. of A.
Casualty Sheet	Med. Examination
Confinement	Misc. Information
Contracts	Pay or Clothing
Death or Effects	Personal Reports
Desertion	Rank
Discharge from Hosp'l	Transfer to Hosp'l
Discharge from Service	Transfer to V. R. C.
Duty	Transportation

DECLARATION OF RECRUIT.

I, William B. Franklin desiring to VOLUNTEER as a Soldier in the *ARMY OF THE UNITED STATES*, for the term of 3 years do declare that I am 23 years and ——— months of age; that I have never been discharged from the United States service on account of disability or by sentence of a court martial, or by order, before the expiration of a term of enlistment; and I know of no impediment to my serving honestly and faithfully as a soldier for 3 years

Given at Providence

The 2 day of Dec 1863

Witness:

L. A. Walker

William B Franklin

No. 3

William B. Franklin

Volunteered at Providence

Dec 2 1863,

By Maj Genl Burnside

To serve 3 Years

As Lieut Col

In the 11th U.S.C.H.A.,

Regiment of Maj Genl Burnside's Body Guard

enlistment; last served in Company ( )

Reg't of ( )

Discharged 18

RECEIVED Jun 11 1864

CONSENT IN CASE OF MINOR.

I, Do CERTIFY that I am the

of ; that the said

is years of age; and I do hereby freely give

my CONSENT to his volunteering as a SOLDIER in the ARMY OF THE UNITED STATES for the period of

Given at

The day of

Witness:

VOLUNTEER ENLISTMENT.

State of R. I. Town of Portland

I, William H. Franklin born in _____

in the State of New York aged 23 years, and by occupation a Farmer

DO HEREBY ACKNOWLEDGE to have volunteered this 2d day of Dec 1863 to serve as a SOLDIER in the ARMY OF THE UNITED STATES OF AMERICA, for the period of three years, unless sooner discharged by proper authority: Do also agree to accept such bounty, pay, rations and clothing, as are, or may be, established, by law for volunteers. And I, William H. Franklin do solemnly swear, that I will bear true faith and allegiance to the *United States of America*, and that I will serve them honestly and faithfully against all their enemies or opposers whomsoever; and that I will observe and obey the orders of the President of the United States, and the orders of the officers appointed over me, according to the Rules and Articles of War.

Sworn and Subscribed to, at Port. R.I.
this 2d day of Dec 1863.
BEFORE me John Latrop Public Notary

William H Franklin

I CERTIFY, ON HONOR, That I have carefully examined the above-named Volunteer, agreeable to the General Regulations of the Army, and that, in my opinion, he is free from all bodily defects and mental infirmity, which would, in any way, disqualify him from performing the duties of a soldier.

Johnson Goodnow M.D.

EXAMINING SURGEON.

I CERTIFY, ON HONOR, That I have minutely inspected the Volunteer, William H. Franklin previously to his enlistment, and that he was entirely sober when enlisted; that to the best of my judgment and belief, he is of lawful age; and that, in accepting him as duly qualified to perform the duties of an able-bodied soldier, I have strictly observed the Regulations which govern the recruiting service. This soldier has Dark *eyes* Black *hair* African *complexion*, is 5 *feet*, 7 *inches high*.

J. Chapley
Capt 14 *Regiment of* R.I. *Volunteers*,

RECRUITING OFFICER.

No. 2 ... U.S. Gov't. H. ...

Pirate	Pirate

CARD NUMBERS.

1	6188937	26	
2	6189085	27	
3	6189232	28	
4	6189378	29	
5	6189521	30	
6	6189667	31	
7	6189803	32	
8	6189932	33	
9	6190058	34	
10	6190191	35	
11	6190320	36	
12	6190451	37	
13	6190578	38	
14	91248850	39	
15		40	
16		41	
17		42	
18		43	
19		44	
20		45	
21		46	
22		47	
23		48	
24		49	
25		50	

Book Mark:

See also

F | 11 H. Art'y. | U.S.C.T.

Edward Frazier

, Co. E, 11 Reg't U. S. Col'd H. Art'y.

Appears on

Company Descriptive Book

of the organization named above.

DESCRIPTION.

Age 23 years; height 5 feet 6½ inches.

Complexion D.K.

Eyes D.K.; hair D.K.

Where born Pine Plains, N.Y.

Occupation Farmer.

ENLISTMENT.

When Sept. 26, 1863.

Where Prov., R.I.

By whom J. C. Engley; term 3 y'rs.

Remarks:

O. J. Markle.

(383v) Copyist.

F | 11 H. Art'y. | U.S.C.T.

Edward Frazier

Pvt, Co. E, 14 Reg't R. I. Col'd H. Art'y.*

Age 23 years.

Appears on

Company Muster-in Roll

of the organization named above. Roll dated Providence, R. I., Oct. 5, 1863.

Muster-in to date Oct. 5, 1863.

Joined for duty and enrolled:

When Sept. 29, 186 .

Where Prov. R. I.

Period 3 years.

Valuation of horse, $ 100

Valuation of horse equipments, $ 100

Remarks: New York

* This organization subsequently became Co. E, 11 Reg't U. S. Colored Heavy Artillery.

Book mark:

C Chandler

(356) Copyist.

F | 11 H. Art'y. | U.S.C.T.

Edward Frazier

Pvt, Co. E, 14 Reg't R. I. Col'd H. Art'y.*

Appears on

Company Muster Roll

for Oct. 5 to Dec. 31, 1863.

Present or absent Present

Stoppage, $ 100 for

Due Gov't, $ 100 for

Valuation of horse, $ 100

Valuation of horse equipments, $ 100

Remarks:

*This organization subsequently became Co. E, 11 Reg't U. S. Col'd Heavy Artillery.

Book mark:

C Chandler

Copyist.

F | 11 H. Art'y. | U.S.C.T.

Edward Frazier

Pvt., Co. E, 14 Reg't R. I. Col'd H. Art'y.*

Appears on

Company Muster Roll

for Jan. & Feb., 1864.

Present or absent Present

Stoppage, $ 100 for

Due Gov't, $ 100 for

Valuation of horse, $ 100

Valuation of horse equipments, $ 100

Remarks: Due Laundress $.75-

*This organization subsequently became Co. E, 11 Reg't U. S. Col'd Heavy Artillery.

Book mark:

C Landis

Copyist.

F | 11 H. Art'y. | U.S.C.T.

Edward Frazier

Pvt., Co. E, 14 Reg't R. I. Col'd H. Art'y.*

Appears on

Company Muster Roll

for Mch. & April, 1864.

Present or absent Present

Stoppage, $ 100 for

Due Gov't, $ 100 for

Valuation of horse, $ 100

Valuation of horse equipments, $ 100

Remarks: Due Laundress .75

*This organization subsequently became Co. E, 11 Reg't U. S. Col'd Heavy Artillery.

Book mark:

C Chandler

Copyist.

F | **11** H. Art'y. | **U.S.C.T.**

Edward Frazier

Pvt, Co. E, 8 Reg't U. S. Col'd H. Art'y.*

Appears on

Company Muster Roll

for May & June, 1864.

Present or absent Present

Stoppage, $ 100 for

Due Gov't, $ 100 for

Valuation of horse, $ 100

Valuation of horse equipments, $ 100

Remarks: Due Laundress .75

† This organization subsequently became Co. E, 11 Reg't U. S. Colored Heavy Artillery.

Book mark;

C Chandler

Copyist.

F | 11 H. Art'y. | U.S.C.T.

Edward Fidgett

Pvt., Co. E, 11 Reg't U. S. Col'd H. Art'y.

Appears on

Company Muster Roll

for Oct. 31, 1864.

Present or absent Present

Stoppage, $ 100 for

Due Gov't, $ 100 for

Valuation of horse, $ 100

Valuation of horse equipments, $ 100

Remarks: Recd Aug 17-1864.

Book mark:

(358) Hathaway *Copyist.*

F | 11 H. Art'y. | U.S.C.T.

Edward Frazier

Pvt., Co. E, 11 Reg't U. S. Col'd H. Art'y.

Appears on

Company Muster Roll

for Sept. & Oct., 1864.

Present or absent Present

Stoppage, $ 100 for

Due Gov't, $ 100 for

Valuation of horse, $ 100

Valuation of horse equipments, $ 100

Remarks: Enl. April 19-1861.
Dec. Cavalier. 75

Book mark:

(358) *Copyist.*

of | **11** H. Art'y. | **U.S.C.T.**

Edward Frazier

Pvt., Co. **E**, 11 Reg't U. S. Col'd H. Art'y.

Appears on

Company Muster Roll

for Nov. & Dec., 186 4.

Present or absent Present

Stoppage, $ 100 for

Due Gov't, $ 100 for

Valuation of horse, $ 100

Valuation of horse equipments, $ 100

Remarks: Enl. April 19-Sol.
Clothing Rec'd. 75

Book mark:

Copyist.

F | **11** H. Art'y. | **U.S.C.T.**

Edward Frazier

Pvt., Co. **E**, 11 Reg't U. S. Col'd H. Art'y.

Appears on

Company Muster Roll

for Jan. & Feb., 1865.

Present or absent Present

Stoppage, $ 100 for

Due Gov't, $ 67/100 for Canteen & Haversack

Valuation of horse, $ 100

Valuation of horse equipments, $ 100

Remarks: Stop for 1 Haversack

2/

Book mark:

J. Hathaway

(358) *Copyist.*

F | 11 H. Art'y. | U.S.C.T.

Edward Fagin

Pvt., Co. E, 11 Reg't U. S. Col'd H. Art'y.

Appears on

Company Muster Roll

for Nov. & Dec., 1865.

Present or absent Present

Stoppage, $ 100 for

Due Gov't, $ 67/100 for Clothing

Valuation of horse, $ 100

Valuation of horse equipments, $ 100

Remarks: Enl. Nov 1 1865 Mustered Nov 31 1865

Book mark:

(358) Copyist.

F | 11 H. Art'y. | U.S.C.T.

Edward Frazier

Priv., Co. E, 11 Reg't U. S. Col'd H. Art'y.

Appears on

Company Muster Roll

for May and June, 1865.

Present or absent Present

Stoppage, $ 100 for

Due Gov't, $ 100 for

Valuation of horse, $ 100

Valuation of horse equipments, $ 100

Remarks:

Book mark:

(358) J. C. B. James Copyist.

Pr. | 11 H. Art'y. | U.S.C.T.

Edward Frazier

Priv., Co. E, 11 Reg't U. S. Col'd H. Art'y.

Appears on

Company Muster Roll

for July and August, 1865.

Present or absent Present.

Stoppage, $ 100 for

Due Gov't, $ 100 for

Valuation of horse, $ 100

Valuation of horse equipments, $ 100

Remarks: Stop for one letter, 01 j one
over canteen, 02 j one eagle, 02 j
2 numbers, 02 j one pr scales, 70c.

Book mark:

(358) J. B. Jones *Copyist.*

Ft | **11** H. Art'y. | **U.S.C.T.**

Edward Frazier

Pvt., Co. E, 11 Reg't U. S. Col'd H. Art'y.

Appears on **Co. Muster-out Roll,** dated

New Orleans, La., Oct. 2, 1865.

Muster-out to date Oct. 2, 1865.

Last paid to June 30, 1865.

Clothing account:

Last settled ....., 186 ; drawn since $ 100

Due soldier $ ..... 100 ; due U. S. $ 29 26/100

Am't for cloth'g in kind or money adv'd $ 100

Due U. S. for arms, equipments, &c., $ 100

Bounty paid $ none 100 ; due $ 100 00/100

Remarks: Joined ch. Org. Org. Slop for one musket rack retained 6.00; one Jor. scales .70; one letter .01; one X Cap .02; one eagle .02; 2 Stars .02.

Book mark: 328-172.

---

(361) J. B. Jones *Copyist.*

Frazer Edward

_____, Co. _____, 11 Reg't Mass Vol

1 **Enclosures.**

Bed Cards _____	Final Statements _____
Burial Records _____	Furloughs or L. of A. _____
Certs. of Dis. for Discharge _____	Med. Certificates _____
C. M. Charges _____	Med. Des. Lists _____
Descriptive Lists _____	Orders _____
Discharge Certificates _____	Pris. of War Record _____
Enlistment Papers 1	Resignations _____

Other papers relating to—

Admission to Hosp'l _____	Furlough or L. of A. _____
Casualty Sheet _____	Med. Examination _____
Confinement _____	Misc. Information _____
Contracts _____	Pay or Clothing _____
Death or Effects _____	Personal Reports _____
Desertion _____	Rank _____
Discharge from Hosp'l _____	Transfer to Hosp'l _____
Discharge from Service _____	Transfer to V. R. C. _____
Duty _____	Transportation _____
_____	_____

DECLARATION OF RECRUIT.

I, Edward Phaeyes desiring to VOLUNTEER as a Soldier in the *ARMY OF THE UNITED STATES*, for the term of three years do declare that I am 23 years and months of age; that I have never been discharged from the United States service on account of disability or by sentence of a court martial, or by order, before the expiration of a term of enlistment; and I know of no impediment to my serving honestly and faithfully as a soldier for

Given at Providence
The 16 day of Dec 18 63

Witness: J. C. Smyley Edward X Phaeyes

11 24 36

No. 2

Edward Phaeyes

Volunteered at .....

By .....

Regiment of .....

enlistment; last served in Company (.....)

Reg't of .....

Discharged .....

18 .....

186 .....

RECEIVED JUL 11 1871

CONSENT IN CASE OF MINOR.

I, Do Certify that I am the
of ; that the said
is years of age; and I do hereby freely give
my CONSENT to his volunteering as a SOLDIER in the ARMY OF THE UNITED STATES for the period of

Given at
The day of

Witness:

VOLUNTEER ENLISTMENT.

State of Rhode Island Town of Providence

I, Edward J Rogers born in N. J. Lloyd

in the State of — aged 23 years, and by occupation a Painter DO HEREBY ACKNOWLEDGE to have volunteered this 26 day of Sep 1863 to serve as a SOLDIER in the ARMY OF THE UNITED STATES OF AMERICA for the period of Three Years, unless sooner discharged by proper authority: Do also agree to accept such bounty, pay, rations and clothing, as are, or may be, established, by law for volunteers. And I, Edward J Rogers do solemnly swear, that I will bear true faith and allegiance to the *United States of America*, and that I will serve them honestly and faithfully against all their enemies or opposers whomsoever; and that I will observe and obey the orders of the President of the United States, and the orders of the officers appointed over me, according to the Rules and Articles of War.

Sworn and Subscribed to, at Providence Edward J Rogers

this 26 day of Sep 1863

BEFORE me R Corscaden Justice of the Peace

I CERTIFY, ON HONOR, That I have carefully examined the above-named Volunteer, agreeable to the General Regulations of the Army, and that, in my opinion, he is free from all bodily defects and mental infirmity, which would, in any way, disqualify him from performing the duties of a soldier.

Johnson Gardner M.D.

EXAMINING SURGEON.

I CERTIFY, ON HONOR, That I have minutely inspected the Volunteer, Edward J Rogers previously to his enlistment, and that he was entirely sober when enlisted; that to the best of my judgment and belief, he is of lawful age; and that, in accepting him as duly qualified to perform the duties of an able-bodied soldier, I have strictly observed the Regulations which govern the recruiting service. This soldier has Dark *eyes* Dark *hair*, Dark *complexion*, is 5 *feet*, 8 2 *inches high*.

J. C. Smyley

Brig' 14 *Regiment of* R. I. H. A. *Volunteers*,

RECRUITING OFFICER.

E. Smith

CARD NUMBERS.

1 6188938	26
2 6189086	27
3 6189233	28
4 6189379	29
5 6189522	30
6 6189642	31
7 6189777	32
8 6189907	33
9 6190033	34
10 6190160	35
11 6190321	36
12 6190452	37
13 6190579	38
14 9124881	39
15	40
16	41
17	42
18	43
19	44
20	45
21	46
22	47
23	48
24	49
25	50

Book Mark:

See also

D. 2386691 Dominion
A. S. 1703252

J. D. Marx
Ex.

F | 11 H. Art'y. | U.S.C.T.

Jerome Frazier

, Co. E, 11 Reg't U. S. Col'd H. Art'y.

Appears on

Company Descriptive Book

of the organization named above.

DESCRIPTION.

Age 21 years; height 5 feet 10½ inches.

Complexion Dk.

Eyes Dk.; hair Dk.

Where born Pine Plains, N. Y.

Occupation Farmer.

ENLISTMENT.

When Sept. 24, 1863.

Where Prov., R. I.

By whom J. C. Engley; term 3 y'rs.

Remarks:

O. J. Markle,

(383y) Copyist.

F | 11 H. Art'y. | U.S.C.T.

Jerome Frazier

Pvt., Co. E, 14 Reg't R. I. Col'd H. Art'y.*

Age 21 years.

Appears on

Company Muster-in Roll

of the organization named above. Roll dated Providence, R.I., Oct. 5, 1863.

Muster-in to date Oct. 5, 1863.

Joined for duty and enrolled:

When Sept. 24, 186 .

Where Prov., R.I.

Period 3 years.

Valuation of horse, $ 100

Valuation of horse equipments, $ 100

Remarks: Pine Plains, N.Y.

* This organization subsequently became Co. E, 11 Reg't U. S. Colored Heavy Artillery.

Book mark:

C Chandler

Copyist.

F | 11 H. Art'y. | U.S.C.T.

Jerome Frazier

Pvt., Co. E, 14 Reg't R. I. Col'd H. Art'y.*

Appears on

Company Muster Roll

for Oct. 5 - to Dec. 31, 1863.

Present or absent Present

Stoppage, $ ..... 100 for .....

.....

.....

Due Gov't, $ ..... 100 for .....

.....

Valuation of horse, $ 100

Valuation of horse equipments, $ 100

Remarks: .....

.....

.....

.....

.....

.....

.....

*This organization subsequently became Co. E, 11 Reg't U. S. Col'd Heavy Artillery.

Book mark: .....

C Chandler

Copyist.

F | 11 H. Art'y. | U.S.C.T.

Jerome Frazier

Pvt., Co. E, 14 Reg't R. I. Col'd H. Art'y.*

Appears on

Company Muster Roll

for Jan. & Feb., 186 4.

Present or absent Present

Stoppage, $ 100 for

Due Gov't, $ 100 for

Valuation of horse, $ 100

Valuation of horse equipments, $ 100

Remarks: Due Laundress $8.75

*This organization subsequently became Co. E, 11 Reg't U. S. Col'd Heavy Artillery.

Book mark:

C Chandler

Copyist.

F | 11 H. Art'y. | U.S.C.T.

Jerome Frazier

Pvt, Co. E, 14 Reg't R. I. Col'd H. Art'y.*

Appears on

Company Muster Roll

for Mch. & April, 1864.

Present or absent Present

Stoppage, $ 100 for

Due Gov't, $ 100 for

Valuation of horse, $ 100

Valuation of horse equipments, $ 100

Remarks: Due Laundress .75

*This organization subsequently became Co. E, 11 Reg't U. S. Col'd Heavy Artillery.

Book mark:

C Chandler

(358) Copyist.

F | **11** H. Art'y. | **U.S.C.T.**

Jerome Frazier

Pvt., Co. E, 8 Reg't U. S. Col'd H. Art'y.*

Appears on

Company Muster Roll

for May & June, 1864.

Present or absent Present

Stoppage, $ 100 for

Due Gov't, $ 100 for

Valuation of horse, $ 100

Valuation of horse equipments, $ 100

Remarks: Due Laundress, 75

† This organization subsequently became Co. E, 11 Reg't U. S. Colored Heavy Artillery.

Book mark:

C Chandler

Copyist.

F | 11 H. Art'y. | U.S.C.T.

Jerom Fraser

Wagoner, Co. E, 11 Reg't U. S. Col'd H. Art'y.

Appears on

Company Muster Roll

for July & Aug., 186 4.

Present or absent Present

Stoppage, $ 100 for

Due Gov't, $ 100 for

Valuation of horse, $ 100

Valuation of horse equipments, $ 100

Remarks: Free Man 9/64.
Apptd Wagoner July 10,
Not Given for Want
equipments 3.30

Book mark :

J. Hathaway

(358) Copyist.

F | 11 H. Art'y. | U.S.C.T.

Jerome Frazier

Wag; Co. E, 11 Reg't U. S. Col'd H. Art'y.

Appears on

Company Muster Roll

for Sept. & Oct., 186 4.

Present or absent Present

Stoppage, $ 100 for

Due Gov't, $ 100 for

Valuation of horse, $ 100

Valuation of horse equipments, $ 100

Remarks: Appointed Wagoner July 10-1864. Free Aug. 19-1865. Due Clothing 75-

Book mark:

Hathaway

(358) *Copyist.*

F | **11 H. Art'y.** | **U.S.C.T.**

Edwin Tragil

Wagner, Co. E, 11 Reg't U. S. Col'd H. Art'y.

Appears on

Company Muster Roll

for Feb. & Dec, 186 4.

Present or absent Present

Stoppage, $ 100 for

Due Gov't, $ 100 for

Valuation of horse, $ 100

Valuation of horse equipments, $ 100

Remarks: Rec'd Mch 19 - 1864.
Transferred from
Co. F 1st - 4 Feb -
Det - absent sick -

Book mark:

Hathaway

(358) *Copyist.*

F | 11 H. Art'y. | U.S.C.T.

Edmund Frazier

Wynn, Co. E, 11 Reg't U. S. Col'd H. Art'y.

Appears on

Company Muster Roll

for Jan. & Feb., 1865.

Present or absent Present

Stoppage, $ ---- 100 for ----

Due Gov't, $ 1 99/100 for Campaigning

Haversack 98, Canteen 71

Valuation of horse, $ ---- 100

Valuation of horse equipments, $ ---- 100

Remarks: ----

Book mark: ----

(358) [illegible] *Copyist.*

F | 11 H. Art'y. | U.S.C.T.

Aaron Frazier

Wagoner, Co. E, 11 Reg't U. S. Col'd H. Art'y.

Appears on

Company Muster Roll

for Nov. & Dec., 1865.

Present or absent Present

Stoppage, $ ---- 100 for ----

Due Gov't, $ 1 99/100 for Haversack 95 & Canteen 21

Valuation of horse, $ ---- 100

Valuation of horse equipments, $ ---- 100

Remarks: Stop for Haversack 1.95

Book mark: ----

(358) Copyist.

F | 11 H. Art'y. | U.S.C.T.

Jerome Frazier

Priv., Co. E, 11 Reg't U. S. Col'd H. Art'y.

Appears on

Company Muster Roll

for May and June, 1865.

Present or absent Present.

Stoppage, $ 100 for

Due Gov't, $ 100 for

Valuation of horse, $ 100

Valuation of horse equipments, $ 100

Remarks: Stoppage unexplained $1.85.

Book mark:

(358) J. B. Jones *Copyist.*

Jerome Frazier

Pvt., Co. E, 11 Reg't U. S. Col'd H. Art'y.

Appears on

Company Muster Roll

for July and August, 1865.

Present or absent Present.

Stoppage, $ 100 for

Due Gov't, $ 100 for

Valuation of horse, $ 100

Valuation of horse equipments, $ 100

Remarks: Stop for one letter 01; one eagle 02; 2 numbers 02; one pr. scales 70.

Book mark:

(358) J. B. James *Copyist.*

(f) | 11 H. Art'y. | U.S.C.T.

Jerome Frazier

Pvt., Co. E, 11 Reg't U. S. Col'd H. Art'y.

Appears on **Co. Muster-out Roll,** dated

New Orleans, La., Oct. 2, 1865.

Muster-out to date Oct. 2, 1865.

Last paid to June 30, 1865.

Clothing account:

Last settled ....., 186 ; drawn since $ 100

Due soldier $ ..... 100 ; due U. S. $ 14 01/100

Am't for cloth'g in kind or money adv'd $ 100

Due U. S. for arms, equipments, &c., $ 100

Bounty paid $ none 100 ; due $ 100 00/100

Remarks: Joined at Org. Org. Stop for one Moo. bar 1.70; one fr. scales .70; one letter .01, 2 Nos. .02; one eagle .02.

Book mark: V. 64, P. 192, '69

(361) J. B. Jones *Copyist.*

Joachim Jerome

P, Co. , 11 Reg't Mass.

1 Enclosures.

Bed Cards	Final Statements
Burial Records	Furloughs or L. of A.
Certs. of Dis. for Discharge	Med. Certificates
C. M. Charges	Med. Des. Lists
Descriptive Lists	Orders
Discharge Certificates	Pris. of War Record
Enlistment Papers 1	Resignations

Other papers relating to—

Admission to Hosp'l	Furlough or L. of A.
Casualty Sheet	Med. Examination
Confinement	Misc. Information
Contracts	Pay or Clothing
Death or Effects	Personal Reports
Desertion	Rank
Discharge from Hosp'l	Transfer to Hosp'l
Discharge from Service	Transfer to V. R. C.
Duty	Transportation

DECLARATION OF RECRUIT.

I, Jerome Thrasher, desiring to VOLUNTEER as a Soldier in the *ARMY OF THE UNITED STATES*, for the term of Three Years do declare that I am Twenty years and months of age; that I have never been discharged from the United States service on account of disability or by sentence of a court martial, or by order, before the expiration of a term of enlistment; and I know of no impediment to my serving honestly and faithfully as a soldier for Three Years.

Given at Troy N.Y.
The 24 day of Sept 18 63

Witness:
Lt. J. A. Whiting Jr.

Jerome Thrasher

No. 38
Jerome Thrasher
Volunteered at Troy N.Y. Sept 24 1863
By Lt. Whiting
Regiment of U.S. Army
Discharged 18
Reg't of ( ) Company ( ) enlistment; last served in Company

RECEIVED JUL 11 1871

CONSENT IN CASE OF MINOR.

I, , of , Do Certify that I am the ; that the said is years of age; and I do hereby freely give my CONSENT to his volunteering as a SOLDIER in the ARMY OF THE UNITED STATES for the period of

Given at
The day of

Witness:

VOLUNTEER ENLISTMENT.

State of Rhode Island Town of Providence

I, Jerome Thrasher born in Fruit Hills

in the State of New York aged twenty one years, and by occupation a Farmer DO HEREBY ACKNOWLEDGE to have volunteered this twenty fourth day of September 1863 to serve as a SOLDIER in the ARMY OF THE UNITED STATES OF AMERICA, for the period of three Years, unless sooner discharged by proper authority: Do also agree to accept such bounty, pay, rations and clothing, as are, or may be, established, by law for volunteers. And I, Jerome Thrasher do solemnly swear, that I will bear true faith and allegiance to the *United States of America*, and that I will serve them honestly and faithfully against all their enemies or opposers whomsoever; and that I will observe and obey the orders of the President of the United States, and the orders of the officers appointed over me, according to the Rules and Articles of War.

Sworn and Subscribed to, at Prov R I this 24th day of Sept. 1863 Jerome his X Thrasher mark

BEFORE Saml Currie Jr Lieut 14th Reg

I CERTIFY, ON HONOR, That I have carefully examined the above-named Volunteer, agreeable to the General Regulations of the Army, and that, in my opinion, he is free from all bodily defects and mental infirmity, which would, in any way, disqualify him from performing the duties of a soldier.

B. Barrington EXAMINING SURGEON.

I CERTIFY, ON HONOR, That I have minutely inspected the Volunteer, Jerome Thrasher previously to his enlistment, and that he was entirely sober when enlisted; that to the best of my judgment and belief, he is of lawful age; and that, in accepting him as duly qualified to perform the duties of an able-bodied soldier, I have strictly observed the Regulations which govern the recruiting service. This soldier has black *eyes* black *hair*, dark *complexion*, is five *feet*, ten ½ *inches high.*

14th *Regiment of* R I *Volunteers,*

J. B. Engley RECRUITING OFFICER.

U.S. Ord. Dept. Art'y

Journalé	Journalé

CARD NUMBERS.

1	6188939	26	
2	6189087	27	
3	6189234	28	
4	6189380	29	
5	6189523	30	
6	6189668	31	
7	6189804	32	
8	6189933	33	
9	6190059	34	
10	6190190	35	
11	6190322	36	
12	6190453	37	
13	6190580	38	
14	9124882	39	
15		40	
16		41	
17		42	
18		43	
19		44	
20		45	
21		46	
22		47	
23		48	
24		49	
25		50	

Book Mark:

See also

F | 11 H. Art'y. | U.S.C.T.

John Frazier

, Co. E, 11 Reg't U. S. Col'd H. Art'y.

Appears on

Company Descriptive Book

of the organization named above.

DESCRIPTION.

Age 22 years; height 5 feet 6 inches.

Complexion Dk.

Eyes Dk.; hair Dk.

Where born Old Spring, N. Y.

Occupation Farmer.

ENLISTMENT.

When Sept. 24, 1863.

Where Prov. R. I.

By whom J. C. Engley; term 3 y'rs.

Remarks:

O. J. Markle, Copyist.

(383y)

F | 11 H. Art'y. | U.S.C.T.

John Frazier

Pvt., Co. E, 14 Reg't R. I. Col'd H. Art'y.*

Age 22 years.

Appears on

Company Muster-in Roll

of the organization named above. Roll dated Providence, R. I., Oct. 5, 1863.

Muster-in to date Oct. 5, 1863.

Joined for duty and enrolled:

When Sept. 24, 186 .

Where Prov., R. I.

Period 3 years.

Valuation of horse, $ 100

Valuation of horse equipments, $ 100

Remarks: Cold Spring, N. Y.

* This organization subsequently became Co. E, 11 Reg't U. S. Colored Heavy Artillery.

Book mark:

C Chandler

Copyist.

F | 11 H. Art'y. | U.S.C.T.

John Frazier

Pvt., Co. E, 14 Reg't R. I. Col'd H. Art'y.*

Appears on

Company Muster Roll

for Oct. 6 to Dec. 31, 1863.

Present or absent Present

Stoppage, $ 100 for

Due Gov't, $ 100 for

Valuation of horse, $ 100

Valuation of horse equipments, $ 100

Remarks:

*This organization subsequently became Co. E, 11 Reg't U. S. Col'd Heavy Artillery.

Book mark:

C Chandler

(358) *Copyist.*

F | 11 H. Art'y. | U.S.C.T.

John Frazier

Pvt., Co. E, 14 Reg't R. I. Col'd H. Art'y.*

Appears on

Company Muster Roll

for Jan. & Feb., 1864.

Present or absent Present

Stoppage, $ 100 for

Due Gov't, $ 100 for

Valuation of horse, $ 100

Valuation of horse equipments, $ 100

Remarks: Due Laundress $ .75

*This organization subsequently became Co. E, 11 Reg't U. S. Col'd Heavy Artillery.

Book mark :

C Chandler

Copyist.

F | 11 H. Art'y. | U.S.C.T.

John Frazier

Pvt., Co. E, 14 Reg't R. I. Col'd H. Art'y.*

Appears on

Company Muster Roll

for Mch. & April, 1864.

Present or absent Absent

Stoppage, $ 100 for

Due Gov't, $ 100 for

Valuation of horse, $ 100

Valuation of horse equipments, $ 100

Remarks: Sick in Gen. Hospital in New Orleans since Mch. 23, 1864. Descriptive list furnished.

Due Laundress 75^

*This organization subsequently became Co. E, 11 Reg't U. S. Col'd Heavy Artillery.

Book mark:

C Chandler

Copyist.

F | **11 H. Art'y.** | **U.S.C.T.**

John Frazier

Pvt., Co. E, 8 Reg't U. S. Col'd H. Art'y.*

Appears on

Company Muster Roll

for May & June, 1864.

Present or absent Absent

Stoppage, $ 100 for

Due Gov't, $ 100 for

Valuation of horse, $ 100

Valuation of horse equipments, $ 100

Remarks: In Gen. Hosp. at New Orleans, La. since Mar. 23, 1864 Description List furnished. Due Laundress .75

† This organization subsequently became Co. E, 11 Reg't U. S. Colored Heavy Artillery.

Book mark:

C Handler

F | 11 H. Art'y. | U.S.C.T.

John Fagan

Pvt., Co. E, 11 Reg't U. S. Col'd H. Art'y.

Appears on

Company Muster Roll

for Feb. & Mch, 186x.

Present or absent Present

Stoppage, $ 100 for

Due Gov't, $ 100 for

Valuation of horse, $ 100

Valuation of horse equipments, $ 100

Remarks: Recd Phila 17-1861.
Returned from Keek.
Hospital July 1-1864

Book mark:

Hathaway

(358) *Copyist.*

E | 11 H. Art'y. | U.S.C.T.

[illegible], Co. E, 11 Reg't U. S. Col'd H. Art'y.

Appears on

Company Muster Roll

for [illegible], 186[illegible].

Present or absent [illegible]

Stoppage, $ ---- 100 for ----

Due Gov't, $ ---- 100 for ----

Valuation of horse, $ ---- 100

Valuation of horse equipments, $ ---- 100

Remarks: [illegible]

Book mark: ----

(358) [illegible] *Copyist.*

F | 11 H. Art'y. | U.S.C.T.

John Fagin

Pvt., Co. E, 11 Reg't U. S. Col'd H. Art'y.

Appears on

Company Muster Roll

for Nov. & Dec., 186x.

Present or absent Present

Stoppage, $ 100 for

Due Gov't, $ 100 for

Valuation of horse, $ 100

Valuation of horse equipments, $ 100

Remarks: Reg. Apr. 19- Sick Dec. Casualties. 25

Book mark:

(358) Copyist.

F | 11 H. Art'y. | U.S.C.T.

Full Blood

[illegible], Co. E, 11 Reg't U. S. Col'd H. Art'y.

Appears on

Company Muster Roll

for [illegible], 1865.

Present or absent Present

Stoppage, $ 100 for

Due Gov't, $ 100 for

Valuation of horse, $ 100

Valuation of horse equipments, $ 100

Remarks:

Book mark:

[illegible]

(358) Copyist.

F 7 | 11 H. Art'y. | U.S.C.T.

John Frazier

Pvt., Co. E, 11 Reg't U. S. Col'd H. Art'y.

Appears on

Company Muster Roll

for Mch & Apl, 1865.

Present or absent Present

Stoppage, $ ---- 100 for ----

Due Gov't, $ ---- 100 for ----

Valuation of horse, $ ---- 100

Valuation of horse equipments, $ ---- 100

Remarks: ----

Book mark: ----

Patterson

Copyist.

F. | **11 H. Art'y.** | **U.S.C.T.**

John Frazier

Pvt., Co. **E**, 11 Reg't U. S. Col'd H. Art'y.

Appears on

Company Muster Roll

for May and June, 1866.

Present or absent Present.

Stoppage, $ 100 for

Due Gov't, $ 100 for

Valuation of horse, $ 100

Valuation of horse equipments, $ 100

Remarks:

Book mark:

(358) J. D. Lewis *Copyist.*

Fr | 11 H. Art'y. | U.S.C.T.

John Frazier

Pvt., Co. E, 11 Reg't U. S. Col'd H. Art'y.

Appears on

Company Muster Roll

for July and August, 1865.

Present or absent Present.

Stoppage, $ 100 for

Due Gov't, $ 100 for

Valuation of horse, $ 100

Valuation of horse equipments, $ 100

Remarks:

Book mark:

 J. B. Jones Copyist.

F | **11 H. Art'y.** | **U.S.C.T.**

John Frazier

Priv., Co. E, 11 Reg't U. S. Col'd H. Art'y.

Appears on **Co. Muster-out Roll,** dated

New Orleans, La., Oct. 2, 1865.

Muster-out to date Oct. 2, 1865.

Last paid to June 30, 1865.

Clothing account:

Last settled ....., 186 ; drawn since $ 100

Due soldier $ 24 87/100; due U. S. $ 100

Am't for cloth'g in kind or money adv'd $ 100

Due U. S. for arms, equipments, &c., $ 100

Bounty paid $ none 100; due $ 100 00/100

Remarks: Joined at Org & Org'n. Stop for one Monbar 1.70

Book mark:

---

(361) J. B. Jones *Copyist.*

Fraser John

P, Co. 11 Reg't U.S.C.H.A.

1 **Enclosures.**

Bed Cards	Final Statements
Burial Records	Furloughs or L. of A.
Certs. of Dis. for Discharge	Med. Certificates
C. M. Charges	Med. Des. Lists
Descriptive Lists	Orders
Discharge Certificates	Pris. of War Record
Enlistment Papers /	Resignations

Other papers relating to—

Admission to Hosp'l	Furlough or L. of A.
Casualty Sheet	Med. Examination
Confinement	Misc. Information
Contracts	Pay or Clothing
Death or Effects	Personal Reports
Desertion	Rank
Discharge from Hosp'l	Transfer to Hosp'l
Discharge from Service	Transfer to V. R. C.
Duty	Transportation

DECLARATION OF RECRUIT.

I, John Mosher desiring to VOLUNTEER as a Soldier in the *ARMY OF THE UNITED STATES*, for the term of three years do declare that I am twenty two years and months of age; that I have never been discharged from the United States service on account of disability or by sentence of a court martial, or by order, before the expiration of a term of enlistment; and I know of no impediment to my serving honestly and faithfully as a soldier for three years.

Given at Troy N.Y.

The 24 day of Sept 1863

Witness:

Jos Whitmore Jr Pvt Co. E.

his
John X Mosher
mark

Volunteered at Troy, N.Y. *No.* 3

By Lt Col Bingham

Regiment of 125th N.Y.

enlistment; last served in Company ( )

Reg't of .....

Discharged 18

RECEIVED
DEC 11
1863

CONSENT IN CASE OF MINOR.

I, ...

of .....

Do CERTIFY that I am the .....

is ..... ; that the said .....

years of age; and I do hereby freely give my CONSENT to his volunteering as a SOLDIER in the ARMY OF THE UNITED STATES for the period of .....

Given at .....

The ..... day of .....

Witness: .....

VOLUNTEER ENLISTMENT.

State of Rhode Island

Town of Providence

I, John Thacher born in Cold Spring S. C.

in the State of New York aged Twenty two years, and by occupation a Farmer

DO HEREBY ACKNOWLEDGE to have volunteered this Twenty Fourth day of September 1863 to serve as a SOLDIER in the ARMY OF THE UNITED STATES OF AMERICA, for the period of Three Years, unless sooner discharged by proper authority: Do also agree to accept such bounty, pay, rations and clothing, as are, or may be, established, by law for volunteers. And I, John Thacher do solemnly swear, that I will bear true faith and allegiance to the *United States of America*, and that I will serve them honestly and faithfully against all their enemies or opposers whomsoever; and that I will observe and obey the orders of the President of the United States, and the orders of the officers appointed over me, according to the Rules and Articles of War.

Sworn and Subscribed to, at Prov R I

this 24th day of Sept 1863

BEFORE Wm Lyon Justice of the Peace John his + Thacher

I CERTIFY, ON HONOR, That I have carefully examined the above-named Volunteer, agreeable to the General Regulations of the Army, and that, in my opinion, he is free from all bodily defects and mental infirmity, which would, in any way, disqualify him from performing the duties of a soldier.

W. Carpenter EXAMINING SURGEON.

I CERTIFY, ON HONOR, That I have minutely inspected the Volunteer, John Thacher previously to his enlistment, and that he was entirely sober when enlisted; that to the best of my judgment and belief, he is of lawful age; and that, in accepting him as duly qualified to perform the duties of an able-bodied soldier, I have strictly observed the Regulations which govern the recruiting service. This soldier has ~~Mulatto complexion, is~~ Brown eyes Dark hair, five feet, six inches high.

14th Regiment of R. I. Volunteers,

A. B. Engley, RECRUITING OFFICER.

Smith

CARD NUMBERS.

1	6189936	26
2	6189088	27
3	6189235	28
4	6189387	29
5	6189524	30
6	6189611	31
7	6190671	32
8	9124879	33
9		34
10		35
11		36
12		37
13		38
14		39
15		40
16		41
17		42
18		43
19		44
20		45
21		46
22		47
23		48
24		49
25		50

Book [illegible]

See also

F. | 11 H. Art'y. | U.S.C.T.

John H. Frazier

, Co. E, 11 Reg't U. S. Col'd H. Art'y.

Appears on

Company Descriptive Book

of the organization named above.

DESCRIPTION.

Age 22 years; height 5 feet 7 inches.

Complexion Mulatto

Eyes Hazel; hair Bk.

Where born Pine Plains, N. Y.

Occupation Farmer.

ENLISTMENT.

When Sept. 24, 186 3.

Where Prov., R. I.

By whom N. Viall; term 3 y'rs.

Remarks: Died at Plaquemine, La., June 27, 1864. Final Statements and Inventory of Effects given Feb. 27, 1864.

O. J. Markle,

 Copyist.

F | 11 H. Art'y. | U.S.C.T.

John H. Frazier

Pvt., Co. E, 14 Reg't R. I. Col'd H. Art'y.*

Age 22 years.

Appears on

Company Muster-in Roll

of the organization named above. Roll dated Providence, R.I., Oct. 5, 1863.

Muster-in to date Oct. 5, 1863.

Joined for duty and enrolled:

When Sept. 24, 186 .

Where Prov., R.I.

Period 3 years.

Valuation of horse, $ 100

Valuation of horse equipments, $ 100

Remarks: Price Plains, N.Y.

* This organization subsequently became Co. E, 11 Reg't U. S. Colored Heavy Artillery.

Book mark:

Chandler

Copyist.

F | 11 H. Art'y. | U.S.C.T.

John H. Frazier

Pvt, Co. E, 14 Reg't R. I. Col'd H. Art'y.*

Appears on

Company Muster Roll

for Oct. 6- to Dec. 31, 1863.

Present or absent Present

Stoppage, $ 100 for

Due Gov't, $ 100 for

Valuation of horse, $ 100

Valuation of horse equipments, $ 100

Remarks:

*This organization subsequently became Co. E, 11 Reg't U. S. Col'd Heavy Artillery.

Book mark:

L Chandler

(358) *Copyist.*

F | 11 H. Art'y. | U.S.C.T.

John H. Frazier

Pvt., Co. E, 14 Reg't R. I. Col'd H. Art'y.*

Appears on

Company Muster Roll

for Jan. & Feb., 1864.

Present or absent Present

Stoppage, $ 100 for

Due Gov't, $ 100 for

Valuation of horse, $ 100

Valuation of horse equipments, $ 100

Remarks: Due Clothing $ .75

*This organization subsequently became Co. E, 11 Reg't U. S. Col'd Heavy Artillery.

Book mark:

C Chandler

Copyist.

F | 11 H. Art'y. | U.S.C.T.

John H. Frazier

Pvt, Co. E, 14 Reg't R. I. Col'd H. Art'y.*

Appears on

Company Muster Roll

for March & April, 1864.

Present or absent Present

Stoppage, $ 100 for

Due Gov't, $ 100 for

Valuation of horse, $ 100

Valuation of horse equipments, $ 100

Remarks: Due Laundress, 75

*This organization subsequently became Co. E; 11 Reg't U. S. Col'd Heavy Artillery.

Book mark:

C Chandler

Copyist.

F | **11** H. Art'y. | **U.S.C.T.**

John H. Frazier

Pvt, Co. E, 8 Reg't U. S. Col'd H. Art'y.*

Appears on

Company Muster Roll

for May & June, 1864.

Present or absent

Stoppage, $ 100 for

Due Gov't, $ 100 for

Valuation of horse, $ 100

Valuation of horse equipments, $ 100

Remarks: Died in Balt. Hosp. at Plaquemine La. June 27, 1864 Due Laundress 70c

† This organization subsequently became Co. E, 11 Reg't U. S. Colored Heavy Artillery.

Book mark:

C Chandler

Copyist.

F | 11 H. Art'y. | U.S.C.T.

John H. Frazier

Pvt., Co. E, 8 Reg't U. S. Col'd H. Art'y.*

Appears on

Company Muster Roll

for May & June, 1864.

Present or absent .....

Stoppage, $ ..... 100 for .....

.....

Due Gov't, $ ..... 100 for .....

Valuation of horse, $ 100

Valuation of horse equipments, $ 100

Remarks: Died in Batt Hospital at Plaquemine La June 2, 1864
Final statement given
Due Laundress .75

† This organization subsequently became Co. E, 11 Reg't U. S. Colored Heavy Artillery.

Book mark: .....

C Chandler

Copyist.

F | 11 H. Art'y. | U.S.C.T.

John H. Frazier

Priv., Co. E, 11 Reg't U. S. Col'd H. Art'y.

Appears on **Co. Muster-out Roll,** dated

New Orleans, La., Oct. 2, 1865.

Muster-out to date ....., 186 .

Last paid to ....., 186 .

Clothing account:

Last settled....., 186 ; drawn since $.....100

Due soldier $.....100; due U. S. $.....100

Am't for cloth'g in kind or money adv'd $.....100

Due U. S. for arms, equipments, &c., $.....100

Bounty paid $.....100; due $.....100

Remarks: Joined at org'l org'n. Died in Reb. Hosp. at Plaquemine, La. June 27/64 of Congestive Chills. Final Sts forwarded.

Book mark: 294.003

(361) J. B. Jones *Copyist.*

Fraeher John A.

8, Co. 11 Reg't Mass Inf

5 **Enclosures.**

Bed Cards	Final Statements 2
Burial Records	Furloughs or L. of A.
Certs. of Dis. for Discharge	Med. Certificates
C. M. Charges	Med. Des. Lists
Descriptive Lists	Orders
Discharge Certificates	Pris. of War Record
Enlistment Papers 1	Resignations

Other papers relating to—

Admission to Hosp'l	Furlough or L. of A.
Casualty Sheet	Med. Examination
Confinement	Misc. Information
Contracts	Pay or Clothing
Death or Effects 2	Personal Reports
Desertion	Rank
Discharge from Hosp'l	Transfer to Hosp'l
Discharge from Service	Transfer to V. R. C.
Duty	Transportation

DECLARATION OF RECRUIT.

I, John H. Frashier desiring to VOLUNTEER as a Soldier in the *ARMY OF THE UNITED STATES*, for the term of three years do declare that I am twenty two years and months of age; that I have never been discharged from the United States service on account of disability or by sentence of a court martial, or by order, before the expiration of a term of enlistment; and I know of no impediment to my serving honestly and faithfully as a soldier for three years.

Given at Pine Bluff

The 24 day of Sept 1863

Witness:

Jas. H. Mitchell Jr

John H. + Frashier

mark

Volunteered at Pine Bluff Ark. *No.* 4 1 0

By Lt. Mitchell *Enlisted* Sept. 24 1863.

14 Regiment of Regt Ark Vol Cav

enlistment; last served in Company ( ) *under the name of*

Reg't of ( )

Discharged 18

ADJUTANT-GENERAL'S OFFICE RECEIVED Dec 11 1871

CONSENT IN CASE OF MINOR.

I, Do CERTIFY that I am the of ; that the said is years of age; and I do hereby freely give my CONSENT to his volunteering as a SOLDIER in the ARMY OF THE UNITED STATES for the period of

Given at

The day of

Witness:

VOLUNTEER ENLISTMENT.

State of Rhode Island Town of Providence

I, John H. Frasher born in Pennsylvania
in the State of New York aged twenty two years, and by occupation a farmer
DO HEREBY ACKNOWLEDGE to have volunteered this twenty forth day of September 1863 to serve as a SOLDIER in the ARMY OF THE UNITED STATES OF AMERICA, for the period of three years, unless sooner discharged by proper authority: Do also agree to accept such bounty, pay, rations and clothing, as are, or may be, established, by law for volunteers. And I, John H. Frasher do solemnly swear, that I will bear true faith and allegiance to the *United States of America*, and that I will serve them honestly and faithfully against all their enemies or opposers whomsoever; and that I will observe and obey the orders of the President of the United States, and the orders of the officers appointed over me, according to the Rules and Articles of War.

Sworn and Subscribed to, at Prov R I
this 24th day of Sept 1863.
BEFORE Wm P Corrington
Justice of the Peace

his
John + H Frasier
mark

I CERTIFY, ON HONOR, That I have carefully examined the above-named Volunteer, agreeable to the General Regulations of the Army, and that, in my opinion, he is free from all bodily defects and mental infirmity, which would, in any way, disqualify him from performing the duties of a soldier.

W. Corrington EXAMINING SURGEON.

I CERTIFY, ON HONOR, That I have minutely inspected the Volunteer, John H Frasher previously to his enlistment, and that he was entirely sober when enlisted; that to the best of my judgment and belief, he is of lawful age; and that, in accepting him as duly qualified to perform the duties of an able-bodied soldier, I have strictly observed the Regulations which govern the recruiting service. This soldier has Hazel *eyes* Black *hair*, Mulatto *complexion*, is five *feet*, Seven *inches high*.

14th *Regiment of* R. I. H. A *Volunteers*,

N. Viall RECRUITING OFFICER.

17
2d Cr 1864

FINAL STATEMENT

OF

John H. Traynier

Lt. 2d Reg't of U.S.H. Arty (Col'd)

VOLUNTEERS.

NOTE 1.—*Two* of these certificates (or duplicates) are to be given to each Volunteer Soldier or drafted man who may be discharged previously to the discharge of his company, that he may at once receive from the Paymaster the pay, &c., due him, and the captain or other COMMISSIONED officer commanding the company will certify to the act of the delivery of the duplicate certificates; on these certificates the Soldier is "entitled to" his *discharge*, and should also present his discharge to the Paymaster to have the payment endorsed on it. The discharge is to be given back to the Soldier by the Paymaster; the latter only retaining as his voucher the duplicate certificates.

NOTE 2.—If the Soldier is entitled to pay for the use of his horse, the Company Commander will certify to that fact on the back of both these final statements, and also to the time he has pay due for having been so mounted on his own horse.

NOTE 3.—When a Soldier is furnished with final statements, his descriptive list, if he has one, should be taken up by the officer who gives the Soldier these statements, and endorsed with a statement to this effect by the officer. This endorsement should exhibit a full statement of the time for which the Soldier was allowed pay on his final statements, the clothing account, and all other charges against him or in his favor, so as to comprise a complete exhibit of his account. It will then be transmitted to the company commander of the Soldier, who will enter all the data necessary to a full understanding of the Soldier's account on the muster roll upon which the Soldier's discharge is reported. The descriptive list will then be destroyed. The object of this is, that the remaining portion of the Soldier's account may be settled upon the receipt of these muster rolls, and the Soldier receive any pay or allowances that may be due him at the time of his discharge, and which may not appear on his final statements from the fact that his descriptive list is incomplete. These accounts for back pay, &c., are settled by the 2d Auditor of the Treasury Department.

NOTE 4.—Charges for loss or injury to ordnance, horse equipments, and other miscellaneous charges, should appear under the heading of "Other Stoppages."

NOTE 5.—Bounty paid by State authorities, and not by the United States, will not be entered on this statement.

NOTE 6.—Amounts due the Sutler and Laundress must be entered on the muster roll on which the discharge, death, desertion, &c., is reported, as well as on the final statement, otherwise the amount cannot be collected from the United States.

NOTE 7.—This blank will be used for deceased volunteers and drafted men, as well as for others.

NOTE 8.—Where a Soldier dies in Hospital or on detached service, his descriptive list, if he has one, should be sent with his final statements, in duplicate, to the Adjutant General, Washington, D. C.

JUL 8 1871 ADJUTANT GEN'S

I certify, on honor, that John H. Draycii a Recruit of Captain Geo. Wheeler Company (C) of the 5th Regiment of N. H. Hy Art (Col.) VOLUNTEERS, of the State of Rhode Island, born in Providence, State of New York, aged 22 years; 5 feet 7 inches high; Mulatto complexion, Hazel eyes, Black hair, and by occupation a Farmer, having joined the company on its original organization at Providence R. I., and enrolled in it at the muster into the service of the United States at Providence R. I., on the Fifth day of October, 1863, (or was mustered in service as a recruit, by ....., at ....., on the ..... day of ....., 186 , or was drafted and mustered into the service of the United States from the ..... Enrollment District of the State of ....., at ....., on the ..... day of ....., 186 ,) to serve in the Regiment, for the term of Three years: and having served HONESTLY and FAITHFULLY with his Company in the Field to the present date, is now entitled to a DISCHARGE by reason of Death. Received in Base Hospital at Plaquemine June 27th 1864 of Congestive Chills

The said John H. Draycii has been paid ~~was last paid by Paymaster~~ since his enlistment ~~to include~~ the 24th day of September, 1863, and has pay due him from that time to the present date; he is entitled to pay and subsistence for TRAVELING to place of enrollment, and whatever other allowances are authorized to volunteer soldiers, drafted men, or militia, so discharged. He has received from the United States CLOTHING amounting to (145) Forty five $\frac{24}{100}$ dollars, since the 24th day of September, 1863, when his clothing account was last settled. He has received from the United States ——— $\frac{00}{100}$ dollars advanced BOUNTY.

There is to be stopped from him, on account of the State of ———, or other authorities, for CLOTHING, &c., received on entering service, ——— $\frac{00}{100}$ dollars; and for other stoppages, viz: ———

——— $\frac{00}{100}$ dollars.

He has been furnished with TRANSPORTATION in kind from the place of his discharge to ———; and he has been SUBSISTED for TRAVELING to his place of enrollment, up to the ———, 186 .

He is indebted to Lehare, Brun & Co., SUTLER, None $\frac{00}{100}$ dollars.

He is indebted to Mary Ann Lee, LAUNDRESS, ——— $\frac{75}{100}$ dollars.

Given in Duplicate, at Plaquemine La., this 27th day of June, 1864.

Wm H. Cheney
1st Lieut. 5th N. H. Hy Art (Col.)
Commanding Company.

[A. G. O. No. 95—First.]

FINAL STATEMENT

OF

John N. Fearin

Sgt Reg't of U.S. N Artly Co B

11th U.S. A.

VOLUNTEERS.

Died June 27th 1864

NOTE 1.—*Two* of these certificates (or duplicates) are to be given to each Volunteer Soldier or drafted man who may be discharged previously to the discharge of his company, that he may at once receive from the Paymaster the pay, &c., due him, and the captain or other COMMISSIONED officer commanding the company will certify to the act of the delivery of the duplicate certificates; on these certificates the Soldier is "entitled to" his *discharge*, and should also present his discharge to the Paymaster to have the payment endorsed on it. The discharge is to be given back to the Soldier by the Paymaster; the latter only retaining as his voucher the duplicate certificates.

NOTE 2.—If the Soldier is entitled to pay for the use of his horse, the Company Commander will certify to that fact on the back of both these final statements, and also to the time he has pay due for having been so mounted on his own horse.

NOTE 3.—When a Soldier is furnished with final statements, his descriptive list, if he has one, should be taken up by the officer who gives the Soldier these statements, and endorsed with a statement to this effect by the officer. This endorsement should exhibit a full statement of the time for which the Soldier was allowed pay on his final statements, the clothing account, and all other charges against him or in his favor, so as to comprise a complete exhibit of his account. It will then be transmitted to the company commander of the Soldier, who will enter all the data necessary to a full understanding of the Soldier's account on the muster roll upon which the Soldier's discharge is reported. The descriptive list will then be destroyed. The object of this is, that the remaining portion of the Soldier's account may be settled upon the receipt of these muster rolls, and the Soldier receive any pay or allowances that may be due him at the time of his discharge, and which may not appear on his final statements from the fact that his descriptive list is incomplete. These accounts for back pay, &c., are settled by the 2d Auditor of the Treasury Department.

NOTE 4.—Charges for loss or injury to ordnance, horse equipments, and other miscellaneous charges, should appear under the heading of "Other Stoppages."

NOTE 5.—Bounty paid by State authorities, and not by the United States, will not be entered on this statement.

NOTE 6.—Amounts due the Sutler and Laundress must be entered on the muster roll on which the discharge, death, desertion, &c., is reported, as well as on the final statement, otherwise the amount cannot be collected from the United States.

NOTE 7.—This blank will be used for deceased volunteers and drafted men, as well as for others.

NOTE 8.—Where a Soldier dies in Hospital or on detached service, his descriptive list, if he has one, should be sent with his final statements, in duplicate, to the Second Auditor, Washington, D. C.

ADJUTANT GENERAL'S OFFICE.
July 22nd 1864
Duplicate with Inventory sent 2d Auditor.

Sergt

I certify, on honor, that John H. Frazier a Private of Captain Geo W Coles Company (G) of the 8th Regiment of U.S. Col'd Cav'y VOLUNTEERS, of the State of _____, born in Pine Plains, State of New York, aged 29 years; 5 feet 7 inches high; Mulatto complexion, Hazel eyes, Black hair, and by occupation a Farmer, having joined the company on its original organization at Providence R.I., and enrolled in it at the muster into the service of the United States at Providence R.I., on the Fifth day of October, 186 3, (or was mustered in service as a recruit, by _____, at _____, on the _____ day of _____, 186 , or was drafted and mustered into the service of the United States from the _____ Enrollment District of the State of _____, at _____, on the _____ day of _____, 186 ,) to serve in the Regiment, for the term of Three Years: and having served HONESTLY and FAITHFULLY with his Company in 8th U.S. Col'd Cav'y to the present date, is now entitled to a DISCHARGE by reason of Death

(Accident June 27th 1864 see Surgeon Report)

The said John H. Frazier has not been paid since was last paid by Paymaster his enrollment to ~~include~~ on the 24th day of September, 1863, and has pay due him from that time to the present date; he is entitled to pay and subsistence for TRAVELING to place of enrollment, and whatever other allowances are authorized to volunteer soldiers, drafted men, or militia, so discharged. He has received from the United States CLOTHING amounting to Forty five 24/100 dollars, since the 24th day of September, 1863, when his clothing account was last settled. He has received from the United States _____ 100 dollars advanced BOUNTY.

There is to be stopped from him, on account of the State of _____, or other authorities, for CLOTHING, &c., received on entering service, _____ 100 dollars; and for other stoppages, viz: _____

_____ 100 dollars.

He has been furnished with TRANSPORTATION in kind from the place of his discharge to _____; and he has been SUBSISTED for TRAVELING to his place of enrollment, up to the _____, 186 .

He is indebted to Chase Brown & Co, SUTLER, Nine 66/100 dollars.

He is indebted to Mary ann Lee, LAUNDRESS, _____ 75/100 dollars.

Given in Duplicate, at Plaquemine La, this 27th day of June, 1864.

William H. Chenery
1st Lieutenant 8th U.S. Col'd Cav'y
Commanding Company.

[A. G. O. No. 95—First.]

ARTICLES OF WAR.

ART. 95. When any non-commissioned officer or soldier shall die, or be killed in the service of the United States, the then commanding officer of the troop or company shall, in the presence of two other commissioned officers, take an account of what effects he died possessed of, above his arms and accoutrements, and transmit the same to the office of the Department of War, which said effects are to be accounted for, and paid to the representatives of such deceased non-commissioned officer or soldier. And in case any of the officers, so authorized to take care of the effects of deceased officers and soldiers, should, before they have accounted to their representatives for the same, have occasion to leave the regiment or post, by preferment or otherwise, they shall, before they be permitted to quit the same, deposit in the hands of the commanding officer, or of the assistant military agent, all the effects of such deceased non-commissioned officers and soldiers, in order that the same may be secured for, and paid to, their respective representatives.

ARMY REGULATIONS—EDITION OF 1861.

DECEASED SOLDIERS.

Par. 152. Inventories of the effects of deceased non-commissioned officers and soldiers, required by the 95th Article of War, will be forwarded to the Adjutant General, by the commander of the company to which the deceased belonged, and a duplicate of the same to the colonel of the regiment. Final statements of pay, clothing, &c., will be sent with the inventories. When a soldier dies at a post or station absent from his company, it will be the duty of his immediate commander to furnish the required inventory, and, at the same time, to forward to the commanding officer of the company to which the soldier belonged, a report of his death, specifying the date, place, and cause; to what time he was last paid, and the money or other effects in his possession at the time of his decease; which report will be noted on the next muster roll of the company to which the man belonged. Each inventory will be endorsed, "Inventory of the effects of ——— ———, late of company (—) ——— regiment of ———, who died at ———, the——— day of ———, 186–." If a legal representative receive the effects, it will be stated in the report. If the soldier leave no effects, the fact will be reported.

Par. 153. Should the effects of a deceased non-commissioned officer or soldier not be administered upon within a short period after his decease, they shall be disposed of by a Council of Administration, under the authority of the commanding officer of the post, and the proceeds deposited with the Paymaster, to the credit of the United States, until they shall be claimed by the legal representatives of the deceased.

Par. 154. In all such cases of sales by the Council of Administration, a statement in detail, or account of the proceeds, duly certified by the Council and commanding officer, accompanied by the Paymaster's receipt for the proceeds, will be forwarded by the commanding officer to the Adjutant General. The statement will be endorsed, "Report of the proceeds of the effects of ——— ———, late of company (—) ——— regiment of ———, who died at ———, the —— day of ———, 186–."

NOTE 1.—The effects in all cases, when called for, should be turned over to the legal representative, without further authority from the Adjutant General. When the effects are turned over to the relatives of the deceased before these inventories are sent to the Adjutant General, their receipts therefor should be attached to the inventories. In all other cases, one copy will be sent with a letter of transmittal direct to the Adjutant General, and a duplicate retained by the officer.

NOTE 2.—Particular care should be taken to take receipts in duplicate from the Paymaster for any funds turned over to him; one copy should be sent direct to the Adjutant General and one retained by the officer.

INVENTORY OF THE EFFECTS

OF

John H. Fraysier

Late of Company E

8th Reg't of N. S. H. Arty (Col.)

Volunteers, who died at Plaquemine La

on the 27th *day of* June 1864.

GL
8
1871

Inventory of the effects of John H. Frazier late
a Privat of Captain Geo W. Coles Company E of
the 8th Regiment of N. S. H. Artly (Col.) Volunteers, who was enrolled as
a Privat at Providence, R in the State of Rhode Island on
the 24th day of September 1863, and mustered into the service of the United
States as a Privat on the 5th day of October 1863, at Prov. R. I.
in Company E, 8th Regiment of N S H Artly (Col.) Volunteers, to serve Three
years or during the war; he was born in Pine Plains in the State
of New York; he was 22 years of age, 5 feet 7 inches
high, Mulatto complexion, Hazel eyes, Black hair, and by occupation, when enrolled,
a Farmer; he died in Base Hospital, at
Plaquemine La on the 27th day of June 1864, by
reason of Acute Diarrhoea

INVENTORY.

Articles.	No.	Articles.	No.	Articles.	No.
Hats		Pairs trowsers		Knapsacks	
Caps		Pairs flannel drawers			
Forage caps		Pairs cotton drawers			
Great coats		Flannel shirts			
Uniform coats		Cotton shirts			
Uniform jackets		Pairs boots			
Flannel sack coats		Pairs shoes			
Blouses		Pairs socks			
Stable frocks		Blankets			
Fatigue overalls		Haversacks			
				Money. Specie	$
				Notes	$

I certify, on honor, that the above inventory comprises all the effects of Privat John H. Frazier, ~~deceased, and that the effects are in the hands~~ of ~~_____~~ at ~~_____~~ ~~to be disposed of by a Council of Administration.~~

(DUPLICATES.)

Wm H. Chenery
1st Lieut 8th N. H. Artly (Col.)
Commanding the Company.

Station: Plaquemine Lou

Date: June 27th 1864.

[A. G. O. No. 104.]

ARTICLES OF WAR.

ART. 95. When any non-commissioned officer or soldier shall die, or be killed in the service of the United States, the then commanding officer of the troop or company shall, in the presence of two other commissioned officers, take an account of what effects he died possessed of, above his arms and accoutrements, and transmit the same to the office of the Department of War, which said effects are to be accounted for, and paid to the representatives of such deceased non-commissioned officer or soldier. And in case any of the officers, so authorized to take care of the effects of deceased officers and soldiers, should, before they have accounted to their representatives for the same, have occasion to leave the regiment or post, by preferment or otherwise, they shall, before they be permitted to quit the same, deposit in the hands of the commanding officer, or of the assistant military agent, all the effects of such deceased non-commissioned officers and soldiers, in order that the same may be secured for, and paid to, their respective representatives.

ARMY REGULATIONS—EDITION OF 1861.

DECEASED SOLDIERS.

Par. 152. Inventories of the effects of deceased non-commissioned officers and soldiers, required by the 95th Article of War, will be forwarded to the Adjutant General, by the commander of the company to which the deceased belonged, and a duplicate of the same to the colonel of the regiment. Final statements of pay, clothing, &c., will be sent with the inventories. When a soldier dies at a post or station absent from his company, it will be the duty of his immediate commander to furnish the required inventory, and, at the same time, to forward to the commanding officer of the company to which the soldier belonged, a report of his death, specifying the date, place, and cause; to what time he was last paid, and the money or other effects in his possession at the time of his decease; which report will be noted on the next muster roll of the company to which the man belonged. Each inventory will be endorsed, "Inventory of the effects of ——— ———, late of company (—) ——— regiment of ———, who died at ———, the——— day of ———, 186–." If a legal representative receive the effects, it will be stated in the report. If the soldier leave no effects, the fact will be reported.

Par. 153. Should the effects of a deceased non-commissioned officer or soldier not be administered upon within a short period after his decease, they shall be disposed of by a Council of Administration, under the authority of the commanding officer of the post, and the proceeds deposited with the Paymaster, to the credit of the United States, until they shall be claimed by the legal representatives of the deceased.

Par. 154. In all such cases of sales by the Council of Administration, a statement in detail, or account of the proceeds, duly certified by the Council and commanding officer, accompanied by the Paymaster's receipt for the proceeds, will be forwarded by the commanding officer to the Adjutant General. The statement will be endorsed, "Report of the proceeds of the effects of ——— ———, late of company (—) ——— regiment of ———, who died at ———, the —— day of ———, 186–."

NOTE 1.—The effects in all cases, when called for, should be turned over to the legal representative, without further authority from the Adjutant General. When the effects are turned over to the relatives of the deceased before these inventories are sent to the Adjutant General, their receipts therefor should be attached to the inventories. In all other cases, one copy will be sent with a letter of transmittal direct to the Adjutant General, and a duplicate retained by the officer.

NOTE 2.—Particular care should be taken to take receipts in duplicate from the Paymaster for any funds turned over to him; one copy should be sent direct to the Adjutant General and one retained by the officer.

INVENTORY OF THE EFFECTS

OF

Private John H. Frazier

Late of Company E

8th *Reg't of* U.S. Arty Col'd

Volunteers, who died at Plaquemine La

on the 27th *day of* June 1864.

10
21
June
Dec

Inventory of the effects of ~~Dec'd~~ John N. Frazier late a Private of Captain Geo W Cooke Company E of the 8th Regiment of U. S. Va. Artly Col ~~Volunteers~~, who was enrolled as a Private at Providence in the State of Rhode Island on the 24th day of September 1863, and mustered into the service of the United States as a Private on the 5th day of October 1863, at Prov R.I. in Company E, 8th Regiment of U. S. Va. Artly Col ~~Volunteers,~~ to serve Three years or during the war; he was born in Pine Plains in the State of New York; he was 22 years of age, 5 feet 7 inches high, Mulatto complexion, Hazel eyes, Black hair, and by occupation, when enrolled, a Farmer; he died in Battalion Hospital, at Plaquemine La on the 27th day of June 1864, by reason of Intermittent Chills

INVENTORY.

Articles.	No.	Articles.	No.	Articles.	No.
Hats		Pairs trowsers		Knapsacks	
Caps		Pairs flannel drawers			
Forage caps		Pairs cotton drawers			
Great coats		Flannel shirts	1		
Uniform coats	1	Cotton shirts			
Uniform jackets		Pairs boots			
Flannel sack coats		Pairs shoes			
Blouses	1	Pairs socks			
Stable frocks		Blankets		Money. Specie	$
Fatigue overalls		Haversacks		Notes	$

I CERTIFY, ON HONOR, that the above inventory comprises all the effects of Private John N Frazier, deceased, and that the effects are in the hands of Jacob Johnson his brother ~~the~~ next relation at Plaquemine La ~~to be disposed of by a Council of Administration.~~

(DUPLICATES.)

William H. Chenery
1st Lt 8th U.S. Colrd Arty
Commanding the Company.

STATION: Plaquemine La

DATE: June 27th 1864

[A. G. O. No. 104.]

Received this the 27th day of June 1864 of 1st Lieutenant William H. Chenery Comdg Co. E. (8) One Dress Coat, one Blouse, one Shirt & the effects of my brother by law lately deceased

Witness
H. D. Leavitt

(Copy sent 2nd Auditor A.G.O. B)

his
Jacob Johnson
mark

U.S. Col'd H. Art'y

Parrate	Parrate

CARD NUMBERS.

1	6181365	26	
2	6181391	27	
3	6191971	28	
4	6192104	29	
5	6192232	30	
6	6192356	31	
7	9125129	32	
8		33	
9		34	
10		35	
11		36	
12		37	
13		38	
14		39	
15		40	
16		41	
17		42	
18		43	
19		44	
20		45	
21		46	
22		47	
23		48	
24		49	
25		50	

Book Mark:

See also

F | 11 H. Art'y. | U.S.C.T.

John Frederick

, Co. F, 11 Reg't U. S. Col'd H. Art'y.

Appears on

Company Descriptive Book

of the organization named above.

DESCRIPTION.

Age 22 years; height 5 feet 7 inches.

Complexion Dark.

Eyes Black; hair Black.

Where born St. Croix, West Indies.

Occupation Cook.

ENLISTMENT.

When Feb. 25, 1865.

Where Prov. R. I.

By whom Wm. E. Hunting; term 1 y'rs.

Remarks: Joined the Company as recruit April 14, 1865 by S. Orders No. 12 & II from Hd. Qrs. Regt. of April 14, 1865.

O. J. Markle.

(3830) Copyist.

F	11 H. Art'y.	U.S.C.T.

John Frederick

Appears with rank of Pvt on

Muster and Descriptive Roll of a Detachment of U. S. Vols. forwarded

for the 11 Reg't H. Art'y Roll dated

Providence R.I., Mch 6, 1865.

Where born St. Croix W.I.

Age 22 y'rs; occupation Cook

When enlisted Feb 25, 1865.

Where enlisted Providence R.I.

For what period enlisted 1 years.

Eyes Blk; hair Blk

Complexion dark; height 5 ft. 7 in.

When mustered in Feb 25, 1865.

Where mustered in Prov. R.I.

Bounty paid $66 3/100; due $66 2/100

Where credited State R.I. at large

Company to which assigned

Remarks: Recruit, entitled to bounty

Book mark:

Allen

Copyist.

F | 11 H. Art'y. | U.S.C.T.

John Frederick

Appears with rank of Pvt on

Muster and Descriptive Roll of a Detachment of U. S. Vols. forwarded

for the 11 Reg't H.C.H. Art'y. Roll dated

New Haven Conn, Mch 27, 1865.

Where born St Croix West Indies

Age 22 y'rs; occupation Cook

When enlisted Feb 25, 1865.

Where enlisted Providence R.I.

For what period enlisted 1 years.

Eyes Blk; hair Blk

Complexion Dk; height 5 ft. 7 in.

When mustered in Feb 25, 1865.

Where mustered in Providence R.I.

Bounty paid $ 33 33/100; due $ 100

Where credited State R. Rat Lunge

Company to which assigned

Remarks:

Book mark:

Adams

Copyist.

F | 11 H. Art'y. | U.S.C.T.

John Frederick.

Pvt., Co. F, 11 Reg't U. S. Col'd H. Art'y.

Appears on

Company Muster Roll

for Mar. and Apr., 1865.

Present or absent Present.

Stoppage, $ 100 for

Due Gov't, $ 100 for

Valuation of horse, $ 100

Valuation of horse equipments, $ 100

Remarks: Joined a recruit April 14/65.
Received 8 33⅓ U. S. bounty.

Book mark:

Exline.

F | 11 H. Art'y. | U.S.C.T.

John Frederick

Bit, Co. F, 11 Reg't U. S. Col'd H. Art'y.

Appears on

Company Muster Roll

for May & June, 1865.

Present or absent Present.

Stoppage, $ 100 for

Due Gov't, $ 100 for

Valuation of horse, $ 100

Valuation of horse equipments, $ 100

Remarks: Joined as Recruit April 14 Received $ 33.33 Bd. Bounty. Stop. for C. B. Belt Plate .07. Stop. for Screw Driver 2 3 cts, Mus. Bar $1.70 Haversack 95 cts.

Book mark:

Leib

(358) Copyist.

F. | 11 H. Art'y. | U.S.C.T.

John Frederick

Bf., Co. F, 11 Reg't U. S. Col'd H. Art'y.

Appears on

Company Muster Roll

for July & Aug., 1865.

Present or absent Present

Stoppage, $ 100 for

Due Gov't, $ 100 for

Valuation of horse, $ 100

Valuation of horse equipments, $ 100

Remarks: Due $33 1/3 Each
and Installment
U.S. Bounty.

Book mark:

(358)

Copyist.

F | 11 H. Art'y. | U.S.C.T.

John Frederick

Pvt., Co. F, 11 Reg't U. S. Col'd H. Art'y.

Appears on **Co. Muster-out Roll,** dated New Orleans La. Oct. 2, 1865.

Muster-out to date Oct. 2, 1865.

Last paid to June 30, 1865.

Clothing account:

Last settled ....., 186 ; drawn since $ 100

Due soldier $ ..... 100 ; due U. S. $ 1, 41 100

Am't for cloth'g in kind or money adv'd $ 100

Due U. S. for arms, equipments, &c., $ *6. 00 100

Bounty paid $ 33 1/3 100 ; due $ 33 1/3 100

Remarks: Joined as Recruit.

*Stop for one Musket

† Accts. retained.

Book mark:

Leih

(361) *Copyist.*

Frederick, John

_____, _____, 11 Reg't U. S. C. A.

2 Enclosures.

Bed Cards	Final Statements
Burial Records	Furloughs or L. of A
Certs. of Dis. for Discharge	Med. Certificates
C. M. Charges	Med. Des. Lists
Descriptive Lists	Orders
Discharge Certificates	Pris. of War Record
Enlistment Papers 2	Resignations

Other papers relating to—

Admission to Hosp'l	Furlough or L. of A
Casualty Sheet	Med. Examination
Confinement	Misc. Information
Contracts	Pay or Clothing
Death or Effects	Personal Reports
Desertion	Rank
Discharge from Hosp'l	Transfer to Hosp'l
Discharge from Service	Transfer to V. R. C.
Duty	Transportation

DECLARATION OF RECRUIT.

I, John Frederick, desiring to VOLUNTEER as a Soldier in the Army of the United States, for the term of ~~three~~ YEARS, Do Declare, That I am twenty two years and ..... months of age; that I have never been discharged from the United States service on account of disability or by sentence of a court martial, or by order before the expiration of a term of enlistment; and I know of no impediment to my serving honestly and faithfully as a soldier for ~~three~~ years.

GIVEN at Providence R.I.

the 25 day of February 1865

Witness:

C. Mott

John X Frederick
his mark

Witness to his mark
C. Mott

No. 24

John Frederick

Volunteered at Providence R.I.

February 25, 1865,

By Lieut Col. Hamlin to Mar. 1st Regt. Cav.

For 1 Regiment of Infantry Militia Light

enlistment; last served in Company ( )

Reg't of .....

Discharged .....

, 18 .

NOTE 1.—This blank will be used for both enlistments and re-enlistments—enlistment of veterans, &c., &c., in the volunteer service. They will be made out in duplicate in all cases—one to accompany the recruiting return of the superintendent (not the recruiting officer) to the Adjutant General, and one to accompany the accounts of the officer who pays bounty, &c. The Regiment and Company in which the soldier last served should be given on the back.

NOTE 2.—An enlistment holds to service. A muster-in must, in all cases, precede payment of pay, bounty, pension, &c. A muster-in roll must, in all cases, be filed in the Adjutant General's Office as evidence of muster-in. The mustering officer, commissary, or assistant commissary of musters, as the case may be, will countersign both enlistments as having mustered the soldier into the service of the United States before either of them is given to the disbursing officer.

CONSENT IN CASE OF MINOR.

I, ..., DO CERTIFY, That I am the ..... of .....; that the said ..... is ..... years of age; and I do hereby freely give my CONSENT to his volunteering as a SOLDIER in the ARMY OF THE UNITED STATES for the period of THREE YEARS.

GIVEN at .....

the ..... day of .....

Witness:

.....

.....

(A. G. O. No. 74 & 76.)

VOLUNTEER ENLISTMENT.

STATE OF Rhode Island TOWN OF State at large

I, John Frederick, born in St. Croix W. I., ~~in the State of~~ _____, aged Twenty two years, and by occupation a Cook, Do HEREBY ACKNOWLEDGE to have volunteered this Twenty fifth day of February, 1865, to serve as a ***Soldier*** in the **Army of the United States of America,** for the period of ~~THREE~~ *YEARS*, unless sooner discharged by proper authority: Do also agree to accept such bounty, pay, rations, and clothing, as are, or may be, established by law for volunteers. And I, John Frederick, do solemnly swear, that I will bear true faith and allegiance to the ***United States of America,*** and that I will serve them honestly and faithfully against all their enemies or opposers whomsoever; and that I will observe and obey the orders of the President of the United States, and the orders of the officers appointed over me, according to the Rules and Articles of War.

Sworn and subscribed to, at Providence R.I. this 25th day of February, 1865, BEFORE Wm S Hamlin Capt & Pro Mar. 1st Dist R.I.

John his X mark Frederick

witness to his mark C. Mott

I CERTIFY, ON HONOR, That I have carefully examined the above-named Volunteer, agreeably to the General Regulations of the Army, and that, in my opinion, he is free from all bodily defects and mental infirmity, which would in any way disqualify him from performing the duties of a soldier.

C O'Mc Knight

Surg 1st Cavalry 1st Dist R.I.

EXAMINING SURGEON.

I CERTIFY, ON HONOR, That I have minutely inspected the Volunteer John Frederick previously to his enlistment, and that he was entirely sober when enlisted; that, to the best of my judgment and belief, he is of lawful age; and that, in accepting him as duly qualified to perform the duties of an able-bodied soldier, I have strictly observed the Regulations which govern the recruiting service. This soldier has Black *eyes,* Black *hair,* Dark *complexion,* is Five *feet* Seven *inches* high

Wm S Hamlin

Capt Provost Marshal

1st Dist R.I. RECRUITING OFFICER.

(A. G. O. No. 71 & 76.)

Mustered into the service of the United States, for ~~THREE~~ years or during the war, from date of enlistment, in Company Eleventh Regiment of Hy Art Militia Infantry. Volunteers, on the 25th day of February, 1865, at Providence R.I.

Wm S Hamlin

Capt & Pro Mar 1st Dist R.I.

Mustering Officer

DECLARATION OF RECRUIT.

I, John Frederick, desiring to VOLUNTEER as a Soldier in the **Army of the United States**, for the term of ~~THREE~~ YEARS, **Do Declare**, That I am Twenty two years and ——— months of age; that I have never been discharged from the United States service on account of disability or by sentence of a court martial, or by order before the expiration of a term of enlistment; and I know of no impediment to my serving honestly and faithfully as a soldier for ~~three~~ years.

GIVEN at Providence R.I.

the 25th day of February 1865

Witness: C. Mott

John his X mark Frederick

Witness to his mark C. Mott

No. 471

John Frederick

Volunteered at Providence R.I.

February 25th, 1865,

By Capt. Hamlin Co. Mar. 1st Div. R.I.

In the 11th Regiment of Hy Arty U.S. Col'd Troops

enlistment; last served in Company ( )

Reg't of

Discharged ....., 18 .

2744

OFFICE-OF-ARMY
JUL 11 1871

CONSENT IN CASE OF MINOR.

I, ..., DO CERTIFY, That I am the ..... of .....; that the said ..... is ..... years of age; and I do hereby freely give my CONSENT to his volunteering as a SOLDIER in the ARMY OF THE UNITED STATES for the period of THREE YEARS.

GIVEN at .....

the ..... day of .....

Witness:

.....

(A. G. O. No. 74 & 76.)

NOTE 1.—This blank will be used for both enlistments and re-enlistments—enlistment of veterans, &c., &c., in the volunteer service. They will be made out in duplicate in all cases—one to accompany the recruiting return of the superintendent (not the recruiting officer) to the Adjutant General, and one to accompany the accounts of the officer who pays bounty, &c. The Regiment and Company in which the soldier last served should be given on the back.

NOTE 2.—An enlistment holds to service. A muster-in must, in all cases, precede payment of pay, bounty, pension, &c. A muster-in roll must, in all cases, be filed in the Adjutant General's Office as evidence of muster-in. The mustering officer, commissary, or assistant commissary of musters, as the case may be, will countersign both enlistments as having mustered the soldier into the service of the United States before either of them is given to the disbursing officer.

VOLUNTEER ENLISTMENT.

STATE OF Rhode Island

TOWN OF State at Large

I, John Frederick, born in St. Croix W. I.
~~in the State of~~ ____, aged Twenty two years,
and by occupation a Cook, DO HEREBY ACKNOWLEDGE to have
volunteered this Twenty fifth day of February, 1865,
to serve as a **Soldier** in the **Army of the United States of America,** for
the period of ~~THREE~~ YEARS, unless sooner discharged by proper authority:
Do also agree to accept such bounty, pay, rations, and clothing, as are, or may be,
established by law for volunteers. And I, John Frederick, do
solemnly swear, that I will bear true faith and allegiance to the ***United States of America,*** and that I will serve them honestly and faithfully against all their
enemies or opposers whomsoever; and that I will observe and obey the orders of
the President of the United States, and the orders of the officers appointed over
me, according to the Rules and Articles of War.

Sworn and subscribed to, at Providence R.I.
this 25th day of February, 1865,
BEFORE Wm E Hamlin
Capt & Asst. Mar. 1st Dist R.I.

his
John x Frederick
mark
witness to his mark
C. Mowry

I CERTIFY, ON HONOR, That I have carefully examined the above-named Volunteer, agreeably to the General Regulations of the Army, and that, in my opinion, he is free from all bodily defects and mental infirmity, which would in any way disqualify him from performing the duties of a soldier.

C J McKnight
Surg 3d Cavalry 1st Dist R.I.
EXAMINING SURGEON.

I CERTIFY, ON HONOR, That I have minutely inspected the Volunteer John Frederick previously to his enlistment, and that he was entirely sober when enlisted; that, to the best of my judgment and belief, he is of lawful age; and that, in accepting him as duly qualified to perform the duties of an able-bodied soldier, I have strictly observed the Regulations which govern the recruiting service. This soldier has Black *eyes,* Black *hair,* Dark *complexion,* is five *feet* Seven *inches* high

Wm E Hamlin
Capt. Asst. Asst. Provost Marshal Generals,
1st Dist R.I. RECRUITING OFFICER.

(A. G. O. No. 71 & 76.)

Mustered into the service of the United States, for ~~three~~ years or during the war, from date of enlistment, in Company Eleventh Regiment of Hy. Artly. Vol. Militia. Volunteers, on the 25th day of February, 1865, at Providence R.I.

Wm E Hamlin
Capt. & Asst. Mar. 1st Dist R.I.
Mustering Officer.

Title Page

CARD NUMBERS.

1	6187215	26	
2	6187372	27	
3	6187522	28	
4	6187668	29	
5	6187809	30	
6	6187943	31	
7	6188150	32	
8	6188851	33	
9	9124563	34	
10	9124716	35	
11		36	
12		37	
13		38	
14		39	
15		40	
16		41	
17		42	
18		43	
19		44	
20		45	
21		46	
22		47	
23		48	
24		49	
25		50	

Book Mark:

See also

S-619362-2 2nd

J. D. Mark
Ex

F. | 11 H. Art'y. | U.S.C.T.

Albert J. Freeman

, Co. D, 11 Reg't U. S. Col'd H. Art'y.

Appears on

Company Descriptive Book

of the organization named above.

DESCRIPTION.

Age 23 years; height 5 feet 6 inches.

Complexion Dk. Mul.

Eyes Dark; hair Black

Where born Middle Isld, N.Y.

Occupation Farmer.

ENLISTMENT.

When Sept. 21, 186 3.

Where Prov., R. I.

By whom Maj. Sanford; term 3 y'rs.

Remarks: Died at Fort Jackson, La., Sep. 20, 1864. Cause "Acute Diarhea" Final statements and Inventory Effects forwarded Aug. 24, 1864.

O. J. Markle,

(3834) Copyist.

F. | 11 H. Art'y. | U.S.C.T.

Albert J. Freeman

, Co. D, 11 Reg't U. S. Col'd H. Art'y.

Appears on

Company Descriptive Book

of the organization named above.

DESCRIPTION.

Age 23 years; height 5 feet 6 inches.

Complexion Lt. Mul.

Eyes Dark; hair Blk.

Where born Middle Island, N. Y.

Occupation Farmer.

ENLISTMENT.

When Sept. 21, 186 .

Where Prov.

By whom Maj. Sanford; term 3 y'rs.

Remarks: Died at Fort Jackson, La.,
Sept. 20, 1864.

O. J. Markle.

Copyist.

(3S3v)

F | 11 H. Art'y. | U.S.C.T.

Albert J. Freeman

Pvt., Co. D, 14 Reg't R. I. Col'd H. Art'y.*

Age 23 years.

Appears on

Company Muster-in Roll

of the organization named above. Roll dated Providence R.I., Sept. 22, 1863.

Muster-in to date Sept. 22, 1863.

Joined for duty and enrolled:

When Sept. 21, 186 .

Where Prov. R. I.

Period 3 years.

Valuation of horse, $100

Valuation of horse equipments, $100

Remarks: Residence N.Y.

* This organization subsequently became Co. D, 11Reg't U. S. Colored Heavy Artillery.

Book mark:

Herring

Copyist.

F | 11 H. Art'y. | U.S.C.T.

Albert J. Freeman

Pvt., Co. D, 14 Reg't R. I. Col'd H. Art'y.*

Appears on

Company Muster Roll

for Sept. 22 to Dec. 31, 1863.

Present or absent Present

Stoppage, $ ---- 100 for ----

Due Gov't, $ ---- 100 for ----

Valuation of horse, $ ---- 100

Valuation of horse equipments, $ ---- 100

Remarks: ----

*This organization subsequently became Co. D, 11 Reg't U. S. Col'd Heavy Artillery.

Book mark: ----

Herring

(358) *Copyist.*

4 | 11 H. Art'y. | U.S.C.T.

Albert J. Freeman

Pvt., Co. D, 14 Reg't R. I. Col'd H. Art'y.*

Appears on

Company Muster Roll

for Sept. 27/63 to Feb. 29, 1864.

Present or absent Present

Stoppage, $ 100 for

Due Gov't, $ 100 for

Valuation of horse, $ 100

Valuation of horse equipments, $ 100

Remarks:

*This organization subsequently became Co. D, 11 Reg't U. S. Col'd Heavy Artillery.

Book mark:

Lerring

(358) *Copyist.*

F. | 11 H. Art'y. | U.S.C.T.

Albert J. Freeman

Pvt., Co. D, 8 Reg't U. S. Col'd H. Art'y.*

Appears on

Company Muster Roll

for Mar & Apr, 1864.

Present or absent present

Stoppage, $ 100 for

Due Gov't, $ 100 for

Valuation of horse, $ 100

Valuation of horse equipments, $ 100

Remarks:

*This organization subsequently became Co. D, 11 Reg't U. S. Colored Heavy Artillery.

Book mark:

Thos L Allen

7. | **11 H. Art'y.** | **U.S.C.T.**

Albert J. Freeman

Asst., Co. D, 8 Reg't U. S. Col'd H. Art'y.*

Appears on

Company Muster Roll

for May & June, 1864.

Present or absent Present

Stoppage, $ ..... 100 for .....

.....

Due Gov't, $ ..... 100 for .....

.....

Valuation of horse, $ 100

Valuation of horse equipments, $ 100

Remarks: Cash for scales 50

.....

.....

.....

.....

.....

.....

*This organization subsequently became Co. D, 11 Reg't U. S. Colored Heavy Artillery.

Book mark: .....

Wm R Allen

(358) *Copyist.*

F | 11 H. Art'y. | U.S.C.T.

Albert J Freeman
Pvt
, Co. D, 11 Reg't U. S. Col'd H. Art'y.

Appears on

Company Muster Roll

for July & Aug, 1864.

Present or absent Present

Stoppage, $ 91/100 for C & Cl

Due Gov't, $ 100 for

Valuation of horse, $ 100

Valuation of horse equipments, $ 100

Remarks: Free April 19/64

Book mark :

Bradley

(358) *Copyist.*

H | 11 H. Art'y. | U.S.C.T.

Albert J Freeman

Pvt, Co. D, 11 Reg't U. S. Col'd H. Art'y.

Appears on

Company Muster Roll

for Sept 1861, 186X

Present or absent

Stoppage, $ 91/100 for Clothing

Due Gov't, $ 100 for

Valuation of horse, $ 100

Valuation of horse equipments, $ 100

Remarks: Died Sept 20/64 Fort Jackson La Final Statements & Inventories Sent. Free Sept 1861

Book mark:

Biddle

(358) *Copyist.*

I | 11 H. Art'y. | U.S.C.T.

Albert J. Freeman

Pvt., Co. D, 11 Reg't U. S. Col'd H. Art'y.

Appears on **Co. Muster-out Roll,** dated

New Orleans La, Oct. 2, 1865.

Muster-out to date ....., 186 .

Last paid to ....., 186 .

Clothing account:

Last settled....., 186 ; drawn since $.....100

Due soldier $.....100; due U. S. $.....100

Am't for cloth'g in kind or money adv'd $.....100

Due U. S. for arms, equipments, &c., $.....100

Bounty paid $.....100; due $.....100

Remarks: Joined at org. org.
died at Ft. Jackson, La,
Sept. 20, 1864. Final
Statements sent.
Fee Apr. 1961

Book mark:

C. F. Thompson.

(361) *Copyist.*

Truman Albert L.

P., Co. ..., 11 Reg't Mass Inf.

4 Enclosures.

Bed Cards	Final Statements 3
Burial Records	Furloughs or L. of A.
Certs. of Dis. for Discharge	Med. Certificates
C. M. Charges	Med. Des. Lists
Descriptive Lists	Orders
Discharge Certificates	Pris. of War Record
Enlistment Papers /	Resignations

Other papers relating to—

Admission to Hosp'l	Furlough or L. of A.
Casualty Sheet	Med. Examination
Confinement	Misc. Information
Contracts	Pay or Clothing
Death or Effects	Personal Reports
Desertion	Rank
Discharge from Hosp'l	Transfer to Hosp'l
Discharge from Service	Transfer to V. R. C.
Duty	Transportation

DECLARATION OF RECRUIT.

I, Albert D. Freeman desiring to VOLUNTEER as a Soldier in the *ARMY OF THE UNITED STATES*, for the term of 3 y do declare that I am 21 years and months of age; that I have never been discharged from the United States service on account of disability or by sentence of a court martial, or by order, before the expiration of a term of enlistment; and I know of no impediment to my serving honestly and faithfully as a soldier for 3 y Cavalry

Given at
The 1st day of Sept 18 63

Witness:

Albert D. Freeman

No. 4 2

Albert D. Freeman

Volunteered at Boston

on the 1st day of Sept 1863

By Lieut Col Wm H. Sumner

to serve 3 y *Regiment of* Cav'y, U.S.A.

enlistment; last served in Company (

Reg't of

Discharged 18

CONSENT IN CASE OF MINOR.

I, Do CERTIFY that I am the
of ; that the said
is years of age; and I do hereby freely give
my CONSENT to his volunteering as a SOLDIER in the ARMY OF THE UNITED STATES for the period of

Given at
The day of

Witness:

VOLUNTEER ENLISTMENT.

State of Rhode Island

Town of Providence

I, Albert J Freeman born in Middle Island

in the State of Robert J Freeman aged 23 years, and by occupation

a farmer DO HEREBY ACKNOWLEDGE to have volunteered this 1st

day of Sept, 1863 to serve as a SOLDIER in the ARMY OF THE UNITED STATES OF AMERICA, for the period of three years, unless sooner discharged by proper authority: Do also agree to accept such bounty, pay, rations and clothing, as are, or may be, established, by law for volunteers. And I, Robert J. Freeman do solemnly swear, that I will bear true faith and allegiance to the *United States of America*, and that I will serve them honestly and faithfully against all their enemies or opposers whomsoever; and that I will observe and obey the orders of the President of the United States, and the orders of the officers appointed over me, according to the Rules and Articles of War.

Albert J. Freeman

Sworn and Subscribed to, at Rhode Island

this 1 day of Sept 1863

BEFORE S. P. Lagerquist Major 1st R.I. Det

I CERTIFY, ON HONOR, That I have carefully examined the above-named Volunteer, agreeable to the General Regulations of the Army, and that, in my opinion, he is free from all bodily defects and mental infirmity, which would, in any way, disqualify him from performing the duties of a soldier.

Johnson Landers Asst. Surg. U.S.A.

EXAMINING SURGEON.

I CERTIFY, ON HONOR, That I have minutely inspected the Volunteer, Robert J Freeman previously to his enlistment, and that he was entirely sober when enlisted; that to the best of my judgment and belief, he is of lawful age; and that, in accepting him as duly qualified to perform the duties of an able-bodied soldier, I have strictly observed the Regulations which govern the recruiting service. This soldier has blue *eyes* blond *hair*, dark complexion, is 5 *feet*, 6 *inches high.*

Regiment of *Volunteers,*

RECRUITING OFFICER.

69

3d " 2d — 1864

FINAL STATEMENT

OF

Albert J. Freeman,

1st Lieut Reg't of U.S.A. Co'y 14.

VOLUNTEERS.

NOTE 1.—*Two* of these certificates (or duplicates) are to be given to each Volunteer Soldier or drafted man who may be discharged previously to the discharge of his company, that he may at once receive from the Paymaster the pay, &c., due him, and the captain or other COMMISSIONED officer commanding the company will certify to the act of the delivery of the duplicate certificates; on these certificates the Soldier is "entitled to" his *discharge*, and should also present his discharge to the Paymaster to have the payment endorsed on it. The discharge is to be given back to the Soldier by the Paymaster; the latter only retaining as his voucher the duplicate certificates.

NOTE 2.—If the Soldier is entitled to pay for the use of his horse, the Company Commander will certify to that fact on the back of both these final statements, and also to the time he has pay due for having been so mounted on his own horse.

NOTE 3.—When a Soldier is furnished with final statements, his descriptive list, if he has one, should be taken up by the officer who gives the Soldier these statements, and endorsed with a statement to this effect by the officer. This endorsement should exhibit a full statement of the time for which the Soldier was allowed pay on his final statements, the clothing account, and all other charges against him or in his favor, so as to comprise a complete exhibit of his account. It will then be transmitted to the company commander of the Soldier, who will enter all the data necessary to a full understanding of the Soldier's account on the muster roll upon which the Soldier's discharge is reported. The descriptive list will then be destroyed. The object of this is, that the remaining portion of the Soldier's account may be settled upon the receipt of these muster rolls, and the Soldier receive any pay or allowances that may be due him at the time of his discharge, and which may not appear on his final statements from the fact that his descriptive list is incomplete. These accounts for back pay, &c., are settled by the 2d Auditor of the Treasury Department.

NOTE 4.—Charges for loss or injury to ordnance, horse equipments, and other miscellaneous charges, should appear under the heading of "Other Stoppages."

NOTE 5.—Bounty paid by State authorities, and not by the United States, will not be entered on this statement.

NOTE 6.—Amounts due the Sutler and Laundress must be entered on the muster roll on which the discharge, death, desertion, &c., is reported, as well as on the final statement, otherwise the amount cannot be collected from the United States.

NOTE 7.—This blank will be used for deceased volunteers and drafted men, as well as for others.

NOTE 8.—Where a Soldier dies in Hospital or on detached service, his descriptive list, if he has one, should be sent with his final statements, in duplicate, to the Second Auditor, Washington, D. C.

JUN 6 1864
ADJUTANT

1864

I certify, on honor, that Albert J. Truman a Private of Captain Joel Metcalf Jr Company (K) of the 11th Regiment of U.S.A. Cav. Hy. VOLUNTEERS, of the State of Rhode Island, born in Providence, State of New York, aged 23 years; 5 feet 6 inches high; Dk Ruddy complexion, Dark eyes, Blk hair, and by occupation a Farmer, having joined the company on its original organization at Providence R.I., and enrolled in it at the muster into the service of the United States at Providence R.I., on the 22d day of September, 1863, (or was mustered in service as a recruit, by Maj Bamford, at Sm R.I., on the 21st day of Septr, 1863, or was drafted and mustered into the service of the United States from the ____ Enrollment District of the State of ____, at ____, on the ____ day of ____, 186 ,) to serve in the Regiment, for the term of Three Years: and having served HONESTLY and FAITHFULLY with his Company in the field to the present date, is now entitled to a DISCHARGE by reason of Death at Fort Jackson La on the 20th of September 1864 Chronic Chronic Diarrhea

The said Albert J. Truman was ~~last~~ paid by Paymaster since Enlistment to include the 21st day of September, 1863, and has pay due him from that time to the present date; he is entitled to pay and subsistence for TRAVELING to place of enrollment, and whatever other allowances are authorized to volunteer soldiers, drafted men, or militia, so discharged. He has received from the United States CLOTHING amounting to 62 79/100 dollars, since the 21st day of September, 1863, when his clothing account was last settled. He has received from the United States ____/100 dollars advanced BOUNTY.

There is to be stopped from him, on account of the State of ____, or other authorities, for CLOTHING, &c., received on entering service, ____/100 dollars; and for other stoppages, viz: ____

Pension and Garrison Equipage 91/100 dollars.

He has been furnished with TRANSPORTATION in kind from the place of his discharge to ____; and he has been SUBSISTED for TRAVELING to his place of enrollment, up to the ____, 186 .

He is indebted to ____, SUTLER, ____/100 dollars.

He is indebted to ____, LAUNDRESS, ____/100 dollars.

Given in Duplicate, at Fort Jackson La, this 21st day of September, 1864.

Joel Metcalf Jr
Capt 11th U.S. Cav
Commanding Company.

Late 11th R.I. Cav

A. G. O. No. 95—First.

FINAL STATEMENT

OF

Lt Albert J. Truman

11th Reg't of U. S. A Corps Hq

11

VOLUNTEERS.

Aug Sept 20th 1864

NOTE 1.—*Two* of these certificates (or duplicates) are to be given to each Volunteer Soldier or drafted man who may be discharged previously to the discharge of his company, that he may at once receive from the Paymaster the pay, &c., due him, and the captain or other COMMISSIONED officer commanding the company will certify to the act of the delivery of the duplicate certificates; on these certificates the Soldier is "entitled to" his *discharge*, and should also present his discharge to the Paymaster to have the payment endorsed on it. The discharge is to be given back to the Soldier by the Paymaster; the latter only retaining as his voucher the duplicate certificates.

NOTE 2.—If the Soldier is entitled to pay for the use of his horse, the Company Commander will certify to that fact on the back of both these final statements, and also to the time he has pay due for having been so mounted on his own horse.

NOTE 3.—When a Soldier is furnished with final statements, his descriptive list, if he has one, should be taken up by the officer who gives the Soldier these statements, and endorsed with a statement to this effect by the officer. This endorsement should exhibit a full statement of the time for which the Soldier was allowed pay on his final statements, the clothing account, and all other charges against him or in his favor, so as to comprise a complete exhibit of his account. It will then be transmitted to the company commander of the Soldier, who will enter all the data necessary to a full understanding of the Soldier's account on the muster roll upon which the Soldier's discharge is reported. The descriptive list will then be destroyed. The object of this is, that the remaining portion of the Soldier's account may be settled upon the receipt of these muster rolls, and the Soldier receive any pay or allowances that may be due him at the time of his discharge, and which may not appear on his final statements from the fact that his descriptive list is incomplete. These accounts for back pay, &c., are settled by the 2d Auditor of the Treasury Department.

NOTE 4.—Charges for loss or injury to ordnance, horse equipments, and other miscellaneous charges, should appear under the heading of "Other Stoppages."

NOTE 5.—Bounty paid by State authorities, and not by the United States, will not be entered on this statement.

NOTE 6.—Amounts due the Sutler and Laundress must be entered on the muster roll on which the discharge, death, desertion, &c., is reported, as well as on the final statement, otherwise the amount cannot be collected from the United States.

NOTE 7.—This blank will be used for deceased volunteers and drafted men, as well as for others.

NOTE 8.—Where a Soldier dies in Hospital or on detached service, his descriptive list, if he has one, should be sent with his final statements, in duplicate, to the Second Auditor, Washington, D. C.

RECEIVED
OCT
18
1864
ADJUTANT GEN'LS OFFICE

ADJUTANT GENERAL'S OFFICE.
Oct 19th 1864.
Duplicate with Inventory sent 2d Auditor.

I certify, on honor, that Albert J. Truman a Private of Captain Joe Mulcay's Company (E) of the 11th Regiment of U.S. a Cav Ky VOLUNTEERS, of the State of Rhode Island, born in Indian Illinois, State of New York, aged 23 years; 5 feet 6 inches high, Dk Mulatto complexion, Dark eyes, Black hair, and by occupation a Farmer, having joined the company on its original organization at Jeffn Barracks Mo, and enrolled in it at the muster into the service of the United States at Jeffn Barracks Mo, on the 22d day of September, 1863, (or was mustered in service as a recruit, by Major Bowles, at Jeffn Brks, on the 21st day of September 1863, or was drafted and mustered into the service of the United States from the ..... Enrollment District of the State of ....., at ....., on the ..... day of ....., 186 ,) to serve in the Regiment, for the term of Three Years: and having served HONESTLY and FAITHFULLY with his Company in the field to the present date, is now entitled to a DISCHARGE by reason of Death at Fort Jackson La. on the 20th of September 1864. Cause Chronic Diarrhoea.

The said Albert J. Truman was last paid by Paymaster Since Enlistment to include the 31st day of September, 1863, and has pay due him from that time to the present date; he is entitled to pay and subsistence for TRAVELING to place of enrollment, and whatever other allowances are authorized to volunteer soldiers, drafted men, or militia, so discharged. He has received from the United States CLOTHING amounting to 62 46/100 dollars, since the 31st day of September 1863, when his clothing account was last settled. He has received from the United States ..... 00/100 dollars advanced BOUNTY.

There is to be stopped from him, on account of the State of ....., or other authorities, for CLOTHING, &c., received on entering service, ... 00/100 dollars; and for other stoppages, viz: .....

Camp and Garrison Equipage 21/100 dollars.

He has been furnished with TRANSPORTATION in kind from the place of his discharge to .....; and he has been SUBSISTED for TRAVELING to his place of enrollment, up to the ....., 186 .

He is indebted to ....., SUTLER, ... 00/100 dollars.

He is indebted to ....., LAUNDRESS, ... 00/100 dollars.

Given in Duplicate, at Fort Jackson La, this 21st day of September, 1863.

This Discharge Issued in Error.

Joe Mulcay Jr.

Capt 11th U.S. Cav 14y

Commanding Company

Lieut 11th U.S. Cav

[A. G. O. No. 95—First.]

FINAL STATEMENT

OF

Albert G. Truman

11th Reg't of U. S. A Corp Hy

VOLUNTEERS.

NOTE 1.—*Two* of these certificates (or duplicates) are to be given to each Volunteer Soldier or drafted man who may be discharged previously to the discharge of his company, that he may at once receive from the Paymaster the pay, &c., due him, and the captain or other COMMISSIONED officer commanding the company will certify to the act of the delivery of the duplicate certificates; on these certificates the Soldier is "entitled to" his *discharge*, and should also present his discharge to the Paymaster to have the payment endorsed on it. The discharge is to be given back to the Soldier by the Paymaster; the latter only retaining as his voucher the duplicate certificates.

NOTE 2.—If the Soldier is entitled to pay for the use of his horse, the Company Commander will certify to that fact on the back of both these final statements, and also to the time he has pay due for having been so mounted on his own horse.

NOTE 3.—When a Soldier is furnished with final statements, his descriptive list, if he has one, should be taken up by the officer who gives the Soldier these statements, and endorsed with a statement to this effect by the officer. This endorsement should exhibit a full statement of the time for which the Soldier was allowed pay on his final statements, the clothing account, and all other charges against him or in his favor, so as to comprise a complete exhibit of his account. It will then be transmitted to the company commander of the Soldier, who will enter all the data necessary to a full understanding of the Soldier's account on the muster roll upon which the Soldier's discharge is reported. The descriptive list will then be destroyed. The object of this is, that the remaining portion of the Soldier's account may be settled upon the receipt of these muster rolls, and the Soldier receive any pay or allowances that may be due him at the time of his discharge, and which may not appear on his final statements from the fact that his descriptive list is incomplete. These accounts for back pay, &c., are settled by the 2d Auditor of the Treasury Department.

NOTE 4.—Charges for loss or injury to ordnance, horse equipments, and other miscellaneous charges, should appear under the heading of "Other Stoppages."

NOTE 5.—Bounty paid by State authorities, and not by the United States, will not be entered on this statement.

NOTE 6.—Amounts due the Sutler and Laundress must be entered on the muster roll on which the discharge, death, desertion, &c., is reported, as well as on the final statement, otherwise the amount cannot be collected from the United States.

NOTE 7.—This blank will be used for deceased volunteers and drafted men, as well as for others.

NOTE 8.—Where a Soldier dies in Hospital or on detached service, his descriptive list, if he has one, should be sent with his final statements, in duplicate, to the Second Auditor, Washington, D. C.

864

DEC 6 1871

I certify, on honor, that Albert J. Freeman a Private of Captain Smith's Company (I) of the 11th Regiment of U.S.A. Cav. VOLUNTEERS, of the State of Louisiana born in Maine State of New York, aged 23 years; 5 feet 6 inches high; Dark complex, Dark eyes, Blk hair, and by occupation a Farmer, having joined the company on its original organization at Carrollton La, and enrolled in it at the muster into the service of the United States at Carrollton La, on the 22nd day of September, 1863, (or was mustered in service as a recruit, by Major Sawtelle, at Carrollton La, on the 21st day of September, 1863, or was drafted and mustered into the service of the United States from the ____ Enrollment District of the State of ____, at ____, on the ____ day of ____, 186 ,) to serve in the Regiment, for the term of Three Years: and having served HONESTLY and FAITHFULLY with his Company in the field to the present date, is now entitled to a DISCHARGE by reason of Death at Fort Jackson La on the 21st of September 1864 Cause of Death Typhoid Fever

The said Albert J. Freeman was last paid by Paymaster Special Enlistments to include the 21st day of September, 1863, and has pay due him from that time to the present date; he is entitled to pay and subsistence for TRAVELING to place of enrollment, and whatever other allowances are authorized to volunteer soldiers, drafted men, or militia, so discharged. He has received from the United States CLOTHING amounting to 62 79/100 dollars, since the 21st day of September, 1863, when his clothing account was last settled. He has received from the United States ____/100 dollars advanced BOUNTY.

There is to be stopped from him, on account of the State of ____, or other authorities, for CLOTHING, &c., received on entering service, ____/100 dollars; and for other stoppages, viz: ____

Camp and Garrison Equipage 11/100 dollars.

He has been furnished with TRANSPORTATION in kind from the place of his discharge to ____; and he has been SUBSISTED for TRAVELING to his place of enrollment, up to the ____, 186 .

He is indebted to ____, SUTLER, ____/100 dollars.

He is indebted to ____, LAUNDRESS, ____/100 dollars.

Given in Duplicate, at Fort Jackson La., this 21st day of September, 1864. This Voucher can not be Effected

Jos Mecaul Jr.
Capt 11th U.S. Cavy
Commanding Company.

Lieut 14th R.S. Infty (Col

A. G. O. No. 95—First.

Co. [illegible], 11 U.S. Col'd H. Art'y.

Private	Corporal

CARD NUMBERS.

1	61810777	26	
2	62015088	27	
3	62016633	28	
4	62018233	29	
5	62021033	30	
6	62022400	31	
7	62029655	32	
8	91259466	33	
9		34	
10		35	
11		36	
12		37	
13		38	
14		39	
15		40	
16		41	
17		42	
18		43	
19		44	
20		45	
21		46	
22		47	
23		48	
24		49	
25		50	

Book Mark:

See also

F | 11 H. Art'y. | U.S.C.T.

Amos G. Freeman

....., Co. M, 11 Reg't U. S. Col'd H. Art'y.

Appears on

Company Descriptive Book

of the organization named above.

DESCRIPTION.

Age 23 years; height 5 feet 7½ inches.

Complexion Mulatto

Eyes Blk; hair Blk

Where born Utica N.Y.

Occupation Laborer

ENLISTMENT.

When Nov 21, 1863.

Where Prov R.I.

By whom J.C. Engly; term 3 y'rs.

Remarks: Mustered into Service Feb 4/64 by Capt H Silvey U.S.A. at Providence R.I. Corporal Feb 17/64 Died in Regtl Hospital at Camp Parapet La Aug 4" 1864 of Typhoid Fever. Inventory of effects & Final Statement forwarded Aug 5" 1864

Griffith

(383y) Copyist.

F | 11 H. A. | U.S.C.T.

James G. Freeman
Pvt (4 R I Co C.d. H.A), Co. ....., 11 Reg't U. S. Col'd H. A.

Age 23 years.

Appears on a

Detachment Muster-in Roll

of the organization named above. Roll dated Providence R.I. Feb 29 1864.

Muster-in to date Feb 5, 1864.

Joined for duty and enrolled:

When Nov 21, 1863.

Where Providence R.I.

Period 3 years.

Valuation of horse, $ 100

Valuation of horse equipments, $ 100

Remarks: Mustered in
Feby 29/64

Book mark:

C M Jackson
Copyist.

F | 11 H. Art'y. | U.S.C.T.

Amos G Freeman

Cpl., Co. M, 14 Reg't R. I. Col'd H. Art'y.*

Appears on

Company Muster Roll

for 25 Jan to 29 Feb, 1864.

Present or absent Present

Stoppage, $ ---- 100 for ----

Due Gov't, $ ---- 100 for ----

Valuation of horse, $ ---- 100

Valuation of horse equipments, $ ---- 100

Remarks: Promoted to Corp Feb 17/64

This organization subsequently became Co. M, 11 Reg't U. S. Colored Heavy Artillery.

Book mark: ----

(358) J Macdonnell

Copyist.

F | 11 H. Art'y. | U.S.C.T.

Amos G Truman

Corp., Co. M, 14 Reg't R. I. Col'd H. Art'y.*

Appears on

Company Muster Roll

for March & Apl, 1864.

Present or absent Present

Stoppage, $ 100 for

Due Gov't, $ 100 for

Valuation of horse, $ 100

Valuation of horse equipments, $ 100

Remarks: Corporal Feb 17/64

This organization subsequently became Co. M, 11 Reg't U. S. Colored Heavy Artillery.

Book mark:

(358) J Underwood

Copyist.

11 H. Art'y. | U.S.C.T.

Amos L. Freeman

Serg., Co. M, 8 Reg't U. S. Col'd H. Art'y.*

Appears on

Company Muster Roll

for May & June, 1864

Present or absent Present

Stoppage, $ 100 for

Due Gov't, $ 100 for

Valuation of horse, $ 100

Valuation of horse equipments, $ 100

Remarks:

†This organization subsequently became Co. M, 11 Reg't U. S. Colored Heavy Artillery.

Book mark:

Baker

(358) *Copyist.*

6 | 11 H. Art'y. | U.S.C.T.

Amos E. Freeman

Corp., Co. M, 11 Reg't U. S. Col'd H. Art'y.

Appears on

Company Muster Roll

for dated Sept. 1, 1864.

Present or absent

Stoppage, $ 100 for

Due Gov't, $ 100 for

Valuation of horse, $ 100

Valuation of horse equipments, $ 100

Remarks: Died aug. 4th 64 in Regt. Hosp. of Typhoid Fever $6 per m. due from enlistment to asst. 30th 64 - Free on 19th asst. 1861.

Book mark:

Tabler

(358) *Copyist.*

h | 11 H. Art'y. | U.S.C.T.

Amos G Freeman

Corp, Co. M, 11 Reg't U. S. Col'd H. Art'y.

Appears on

Company Muster Roll

for Sept. & Oct., 1864.

Present or absent.....

Stoppage, $.....100 for .....

.....

.....

Due Gov't, $.....100 for .....

.....

Valuation of horse, $.....100

Valuation of horse equipments, $.....100

Remarks: Died in Regtl Hospt
Aug 4/64. of Typhoid Fever

.....

.....

.....

.....

.....

.....

.....

Book mark: .....

A. Hubbee

(358) *Copyist.*

F | 11 H. Art'y. | U.S.C.T.

Amos G. Freeman

Corpl., Co. M, 11 Reg't U. S. Col'd H. Art'y.

Appears on **Co. Muster-out Roll,** dated

New Orleans La, Oct 2, 1865.

Muster-out to date ....., 186 .

Last paid to ....., 186 .

Clothing account:

Last settled....., 186 ; drawn since $.....100

Due soldier $.....100; due U. S. $.....100

Am't for cloth'g in kind or money adv'd $.....100

Due U. S. for arms, equipments, &c., $ 100

Bounty paid $.....100; due $.....100

Remarks: joined at original organization
Died at Camp Parapet La. Aug 4/64.
of Typhoid Fever. Final Statement
& Inventory of Effects forwarded
Aug 5/64.

Book mark: .....

Foiret

(361) *Copyist.*

Freeman Amos G.

Cpl, Co. M, 11 Reg't Nebr

8 Enclosures.

Bed Cards	Final Statements 3
Burial Records	Furloughs or L. of A.
Certs. of Dis. for Discharge	Med. Certificates
C. M. Charges	Med. Des. Lists
Descriptive Lists	Orders
Discharge Certificates	Pris. of War Record
Enlistment Papers 1	Resignations

Other papers relating to—

Admission to Hosp'l	Furlough or L. of A.
Casualty Sheet	Med. Examination
Confinement	Misc. Information
Contracts	Pay or Clothing
Death or Effects 4	Personal Reports
Desertion	Rank
Discharge from Hosp'l	Transfer to Hosp'l
Discharge from Service	Transfer to V. R. C.
Duty	Transportation

DECLARATION OF RECRUIT.

I, Amos G Freeman desiring to VOLUNTEER as a Soldier in the *ARMY OF THE UNITED STATES*, for the term of Three Years do declare that I am 23 years and months of age; that I have never been discharged from the United States service on account of disability or by sentence of a court martial, or by order, before the expiration of a term of enlistment; and I know of no impediment to my serving honestly and faithfully as a soldier for three years.

Given at Providence RI

The 21 day of Aug 1863

Witness:

Jn Addeman

Amos G Freeman

No. 24 3

Amos G Freeman

Volunteered at Providence RI

21 Aug

By Major Eng

1st Regiment of A

enlistment; last served in Company ( )

Reg't of .....

Discharged .....

1863

RECEIVED
Jan 11
1871

CONSENT IN CASE OF MINOR.

I, ...

Do CERTIFY that I am the .....

of .....; that the said .....

is ..... years of age; and I do hereby freely give my CONSENT to his volunteering as a SOLDIER in the ARMY OF THE UNITED STATES for the period of .....

Given at .....

The ..... day of .....

Witness:

VOLUNTEER ENLISTMENT.

State of Rhode Island — Town of Providence

I, Amos G. Freeman, born in Utica in the State of New York, aged 23 years, and by occupation a Laborer, DO HEREBY ACKNOWLEDGE to have volunteered this 21 day of Nov 18 63, to serve as a SOLDIER in the ARMY OF THE UNITED STATES OF AMERICA, for the period of Three years, unless sooner discharged by proper authority: Do also agree to accept such bounty, pay, rations and clothing, as are, or may be, established, by law for volunteers. And I, Amos G. Freeman do solemnly swear, that I will bear true faith and allegiance to the *United States of America*, and that I will serve them honestly and faithfully against all their enemies or opposers whomsoever; and that I will observe and obey the orders of the President of the United States, and the orders of the officers appointed over me, according to the Rules and Articles of War.

Amos G. Freeman

Sworn and Subscribed to, at Prov. R.I. this 27 day of Oct 1863 BEFORE me Jno Addeman Justice of the Peace

I CERTIFY, ON HONOR, That I have carefully examined the above-named Volunteer, agreeable to the General Regulations of the Army, and that, in my opinion, he is free from all bodily defects and mental infirmity, which would, in any way, disqualify him from performing the duties of a soldier.

Johnson Gardner M.D.

EXAMINING SURGEON.

I CERTIFY, ON HONOR, That I have minutely inspected the Volunteer, Amos G. Freeman previously to his enlistment, and that he was entirely sober when enlisted; that to the best of my judgment and belief, he is of lawful age; and that, in accepting him as duly qualified to perform the duties of an able-bodied soldier, I have strictly observed the Regulations which govern the recruiting service. This soldier has Black *eyes* Black *hair* Mulatto *complexion*, is five *feet*, 7½ *inches high*.

14th *Regiment of* R.I. *Volunteers*,

RECRUITING OFFICER.

A. Maxwell

FINAL STATEMENT

OF

Corpl. Amos G. Freeman

8th Reg't of U. S. C. A. (Hy)

VOLUNTEERS.

NOTE 1.—*Two* of these certificates (or duplicates) are to be given to each volunteer soldier who may be discharged previously to the discharge of his company, that he may at once receive from the Paymaster the pay, &c., due him, and the captain or other officer commanding the company will certify to the act of the delivery of the duplicate certificates; on these certificates the Soldier is "entitled to" his *discharge*, and should also present his discharge to the Paymaster to have the payment endorsed on it. The discharge is to be given back to the Soldier by the Paymaster; the latter only retaining as his voucher the duplicate certificates.

NOTE 2.—If the Soldier is entitled to pay for the use of his horse, the Company Commander will certify to that fact, and also to the time he has pay due for having been so mounted on his own horse.

NOTE 3.—Amounts due the Sutler and Laundress must be entered on the Muster Roll on which the death, desertion, &c., is reported, as well as on the final statement, otherwise the amount cannot be collected from the United States.

NOTE 4.— This blank will be used for deceased volunteers as well as others.

Jul 8 1871

I certify, on honor, that Amos G. Freeman a Corporal of Captain Southwick's Company (M) of the 8th Regiment of U.S.C.H.A. (Hy) VOLUNTEERS, of the State of Rhode Island, born in Utica, State of New York, aged 23 years; 5 feet 7½ inches high; Mulatto complexion, Blk eyes, Blk hair, and by occupation a Laborer, having joined the company on its original organization at Prov. R.I. Nov 21st 1863, and enrolled in it at the muster into the service of the United States at Providence R. I, on the Fourth day of February, 186 4, (~~or was mustered in service as a recruit, by~~ _____, at _____, on the _____ day of _____, 186 , to serve in the Regiment,) for the term of Three Years: and having served HONESTLY and FAITHFULLY with his Company in _____ to the present date, is now entitled to a DISCHARGE by reason of Death

The said Amos G Freeman was last paid by Paymaster Maj Bishop to include the 30th day of April, at the rate of seven dollars per month, 1864, and has pay due him from that time to the present date; he is entitled to pay and subsistence for TRAVELING to place of enrollment and whatever other allowances are authorized to volunteer soldiers, or militia, so discharged. He has received Fifty five 67/100 dollars, advanced by the United States on account of CLOTHING.

There is to be stopped from him, on account of the ~~State of~~ United States, or other authorities for CLOTHING, overdrawn &c., received on entering service, Twenty four 67/100 dollars; also, for expenses of SUBSISTENCE for TRAVELING from place of enrollment to the place of rendezvous, amounting to ~~100~~ _____ dollars: and on account of the United States for EXTRA CLOTHING received in kind from _____ and for other stoppages, viz:

Nothing

amounting to ~~100~~ 00/100 dollars; and he has been SUBSISTED for TRAVELING to his place of enrollment, up to the _____, 186 .

He is indebted to _____ SUTLER, ~~100~~ _____ dollars.

He is indebted to _____ LAUNDRESS, ~~100~~ _____ dollars.

Given in Duplicate, at Camp Parapet La, this 5th day of August, 1864.

Warren Ralph
1st Lieutenant
Commanding Company.

[A. G. O. No. 95.]

117

3 Vt. 2a - 1864

FINAL STATEMENT

OF

Corp'l. Amos G. Freeman

8th Reg't of U. S. C. A. (Hy)

VOLUNTEERS.

NOTE 1.—*Two* of these certificates (or duplicates) are to be given to each volunteer soldier who may be discharged previously to the discharge of his company, that he may at once receive from the Paymaster the pay, &c., due him, and the captain or other officer commanding the company will certify to the act of the delivery of the duplicate certificates; on these certificates the Soldier is "entitled to" his *discharge*, and should also present his discharge to the Paymaster to have the payment endorsed on it. The discharge is to be given back to the Soldier by the Paymaster; the latter only retaining as his voucher the duplicate certificates.

NOTE 2.—If the Soldier is entitled to pay for the use of his horse, the Company Commander will certify to that fact, and also to the time he has pay due for having been so mounted on his own horse.

NOTE 3.—Amounts due the Sutler and Laundress must be entered on the Muster Roll on which the death, desertion, &c., is reported, as well as on the final statement, otherwise the amount cannot be collected from the United States.

NOTE 4.– This blank will be used for deceased volunteers as well as others.

JUL 6 1871

1864

I certify, on honor, that Amos G. Freeman a Corporal of Captain Southwicks Company (M) of the 8th Regiment of U.S.C.A.(Hy) **VOLUNTEERS**, of the State of Rhode Island, born in Utica, State of New York, aged 23 years; 5 feet 7½ inches high; Mulatto complexion, Blk eyes, Blk hair, and by occupation a Laborer, having joined the company on its original organization at Prov. R.I. Nov. 21 1863 and enrolled in it at the muster into the service of the United States at Providence R.I., on the Fourth day of February, 186 4, (~~or was mustered in service as a recruit, by~~ _____ at _____, on the _____ day of _____, 186 , to serve in the Regiment,) for the term of Three Years: and having served **HONESTLY** and **FAITHFULLY** with his Company in _____ to the present date, is now entitled to a **DISCHARGE** by reason of Death

The said Amos G Freeman was last paid by Paymaster Maj Bishop to include the 30th day of April, 1864, at the rate of Seven dollars per month, and has pay due him from that time to the present date; he is entitled to pay and subsistence for **TRAVELING** to place of enrollment and whatever other allowances are authorized to volunteer soldiers, or militia, so discharged. He has received Fifty five 67/100 dollars, advanced by the United States on account of **CLOTHING.**

There is to be stopped from him, on account of the ~~State~~ of United States, or other authorities for **CLOTHING**, overdrawn &c., received on entering service, Twenty four 67/100 dollars; also, for expenses of SUBSISTENCE for TRAVELING from place of enrollment to the place of rendezvous, amounting to _____ ~~100~~ dollars: and on account of the United States for **EXTRA CLOTHING** received in kind from _____ and for other stoppages, viz:

_____ amounting to _____ ~~100~~ dollars; and he has been SUBSISTED for TRAVELING to his place of enrollment, up to the _____, 186 .

He is indebted to _____ **SUTLER,** _____ ~~100~~ dollars.

He is indebted to _____ **LAUNDRESS,** _____ ~~100~~ dollars.

Given in Duplicate, at Camp Parapet La, this 5th day of August, 1864.

Warren Ralph

1st Lieutenant

Commanding Company.

[A. G. O. No. 85.]

FINAL STATEMENT

OF

Corp'l. Amos G. Freeman

8th Reg't of U.S.C.A. (Heavy)

1128,

VOLUNTEERS.

Aug 4th 1864

NOTE 1.—*Two* of these certificates (or duplicates) are to be given to each volunteer soldier who may be discharged previously to the discharge of his company, that he may at once receive from the Paymaster the pay, &c., due him, and the captain or other officer commanding the company will certify to the act of the delivery of the duplicate certificates; on these certificates the Soldier is "entitled to" his *discharge*, and should also present his discharge to the Paymaster to have the payment endorsed on it. The discharge is to be given back to the Soldier by the Paymaster; the latter only retaining as his voucher the duplicate certificates.

NOTE 2.—If the Soldier is entitled to pay for the use of his horse, the Company Commander will certify to that fact, and also to the time he has pay due for having been so mounted on his own horse.

NOTE 3.—Amounts due the Sutler and Laundress must be entered on the Muster Roll on which the death, desertion, &c., is reported, as well as on the final statement, otherwise the amount cannot be collected from the United States.

NOTE 4.— This blank will be used for deceased volunteers as well as others.

ADJUTANT GENERAL'S OFFICE.
Aug 27 1864
Duplicate with Inventory sent 2d Auditor.

ADJUTANT GEN'L'S OFF. RECEIVED AUG 26 1864

I certify, on honor, that Amos G. Freeman a Corporal of Captain Southwicks Company (M) of the 8" Regiment of U.S.C.A. Hy VOLUNTEERS, of the State of Rhode Island, born in Utica, State of New York, aged 23 years; 5 feet 7 1/2 inches high; Mulatto complexion, Blk eyes, Blk hair, and by occupation a Laborer, having joined the company on its original organization at Providence R.I. Nov. 21" 1863 and enrolled in it at the muster into the service of the United States at Providence R.I., on the Fourth day of February, 186 4, (~~or was mustered in service as a recruit, by~~ _____, at _____, on the _____ day of _____, 186 , to serve in the Regiment,) for the term of Three Years: and having served HONESTLY and FAITHFULLY with his Company in _____ to the present date, is now entitled to a DISCHARGE by reason of Death (Died Aug 4" 1864 see Inventory)

The said Amos G. Freeman was last paid by Paymaster Maj Bishop to include the 30th day of April, 186 4, at the rate of seven dollars per month and has pay due him from that time to the present date; he is entitled to pay and subsistence for TRAVELING to place of enrollment and whatever other allowances are authorized to volunteer soldiers, or militia, so discharged. He has received Fifty five 67/100 dollars, advanced by the United States on account of CLOTHING.

There is to be stopped from him, on account of the ~~State~~ of United States, or other authorities for CLOTHING, Overdrawn &c., received on entering service, Twenty four 67/100 dollars; also, for expenses of SUBSISTENCE for TRAVELING from place of enrollment to the place of rendezvous, amounting to ~~00/100~~ dollars: and on account of the United States for EXTRA CLOTHING received in kind from _____ and for other stoppages, viz:

_____

_____ amounting to ~~100~~ dollars; and he has been SUBSISTED for TRAVELING to his place of enrollment, up to the _____, 186 .

He is indebted to _____, SUTLER, ~~100~~ dollars.

He is indebted to _____, LAUNDRESS, ~~100~~ dollars.

Given in Duplicate, at Camp Ponchetrain La, this 5th day of August, 1864.

Warren Ralph
1st Lieutenant
Commanding Company.

[A. G. O. No. 95.]

FINAL STATEMENT

OF

Corp'l Amos G Foreman

8th Reg't of U. S. C. A. (H)

VOLUNTEERS.

NOTE 1.—*Two* of these certificates (or duplicates) are to be given to each Volunteer Soldier or drafted man who may be discharged previously to the discharge of his company, that he may at once receive from the Paymaster the pay, &c., due him, and the captain or other COMMISSIONED officer commanding the company will certify to the act of the delivery of the duplicate certificates; on these certificates the Soldier is "entitled to" his *discharge*, and should also present his discharge to the Paymaster to have the payment endorsed on it. The discharge is to be given back to the Soldier by the Paymaster; the latter only retaining as his voucher the duplicate certificates.

NOTE 2.—If the Soldier is entitled to pay for the use of his horse, the Company Commander will certify to that fact on the back of both these final statements, and also to the time he has pay due for having been so mounted on his own horse.

NOTE 3.—When a Soldier is furnished with final statements, his descriptive list, if he has one, should be taken up by the officer who gives the Soldier these statements, and endorsed with a statement to this effect by the officer. This endorsement should exhibit a full statement of the time for which the Soldier was allowed pay on his final statements, the clothing account, and all other charges against him or in his favor, so as to comprise a complete exhibit of his account. It will then be transmitted to the company commander of the Soldier, who will enter all the data necessary to a full understanding of the Soldier's account on the muster roll upon which the Soldier's discharge is reported. The descriptive list will then be destroyed. The object of this is, that the remaining portion of the Soldier's account may be settled upon the receipt of these muster rolls, and the Soldier receive any pay or allowances that may be due him at the time of his discharge, and which may not appear on his final statements from the fact that his descriptive list is incomplete. These accounts for back pay, &c., are settled by the 2d Auditor of the Treasury Department.

NOTE 4.—Charges for loss or injury to ordnance, horse equipments, and other miscellaneous charges, should appear under the heading of "Other Stoppages."

NOTE 5.—Bounty paid by State authorities, and not by the United States, will not be entered on this statement.

NOTE 6.—Amounts due the Sutler and Laundress must be entered on the muster roll on which the discharge, death, desertion, &c., is reported, as well as on the final statement, otherwise the amount cannot be collected from the United States.

NOTE 7.—This blank will be used for deceased volunteers and drafted men, as well as for others.

NOTE 8.—Where a Soldier dies in Hospital or on detached service, his descriptive list, if he has one, should be sent with his final statements, in duplicate, to the Second Auditor, Washington, D. C.

1864

I certify, on honor, that Amos G Freeman a Corporal of Captain Southwick's Company (M) of the 8" Regiment of U. S. C. A. (H.) VOLUNTEERS, of the State of Rhode Island, born in Utica, State of New York, aged 23 years; 5 feet 7½ inches high; Mulatto complexion, Blk eyes, Blk hair, and by occupation a Laborer, having joined the company on its original organization at Prov. R. I. Nov. 21/63, and enrolled in it at the muster into the service of the United States at Providence R. I., on the 4" day of February, 186 4, (or was mustered in service as a recruit, by ....., at ....., on the ..... day of ....., 186 , or was drafted and mustered into the service of the United States from the ..... Enrollment District of the State of ....., at ....., on the ..... day of ....., 186 ,) to serve in the Regiment, for the term of Three Years: and having served HONESTLY and FAITHFULLY with his Company in ..... to the present date, is now entitled to a DISCHARGE by reason of Death

The said Amos G. Freeman was last paid by Paymaster Maj. Bishop to include the 30" day of April, at the rate of seven dollars per month, 186 4, and has pay due him from that time to the present date; he is entitled to pay and subsistence for TRAVELING to place of enrollment, and whatever other allowances are authorized to volunteer soldiers, drafted men, or militia, so discharged. He has received from the United States CLOTHING amounting to Fifty five & 67/100 dollars, since the ..... day of Enlistment, 186 , when his clothing account was last settled. He has received from the United States ..... 100 dollars advanced BOUNTY.

There is to be stopped from him, on account of the State of ....., or other authorities, for CLOTHING, &c., received on entering service, ... 100 dollars; and for other stoppages, viz: Nothing

..... 100 dollars.

He has been furnished with TRANSPORTATION in kind from the place of his discharge to .....; and he has been SUBSISTED for TRAVELING to his place of enrollment, up to the ....., 186 .

He is indebted to ....., SUTLER, ... 100 dollars.

He is indebted to ....., LAUNDRESS, ... 100 dollars.

Given in Duplicate, at Camp Parapet La, this 5" day of August, 1864.

Warren Ralph
1st Lt 8th U.S.C.A.(H.)
Commanding Company.

A. G. O. No. 95—First.)

ARTICLES OF WAR.

ART. 95. When any non-commissioned officer or soldier shall die, or be killed in the service of the United States, the then commanding officer of the troop or company shall, in the presence of two other commissioned officers, take an account of what effects he died possessed of, above his arms and accoutrements, and transmit the same to the office of the Department of War, which said effects are to be accounted for, and paid to the representatives of such deceased non-commissioned officer or soldier. And in case any of the officers, so authorized to take care of the effects of deceased officers and soldiers, should, before they have accounted to their representatives for the same, have occasion to leave the regiment or post, by preferment or otherwise, they shall, before they be permitted to quit the same, deposit in the hands of the commanding officer, or of the assistant military agent, all the effects of such deceased non-commissioned officers and soldiers, in order that the same may be secured for, and paid to, their respective representatives.

ARMY REGULATIONS—EDITION OF 1863.

DECEASED SOLDIERS.

Par. 152. Inventories of the effects of deceased non-commissioned officers and soldiers, required by the 95th Article of War, will be forwarded to the Adjutant General, by the commander of the company to which the deceased belonged, and a duplicate of the same to the colonel of the regiment. Final statements of pay, clothing, &c., in duplicate, will be sent to the Adjutant General with one copy of the inventory. When a soldier dies at a post or station absent from his company, it will be the duty of his immediate commander to furnish the required inventory and final statements, and, at the same time, to forward to the commanding officer of the company to which the soldier belonged, a report of his death, specifying the date, place, and cause; to what time he was last paid, and the money or other effects in his possession at the time of his decease; which report will be noted on the next muster roll of the company to which the man belonged. Each inventory will be endorsed, "Inventory of the effects of ——— ———, late of company (—,) ——— regiment of ———, who died at ———, the —— day of ———, 186–." If a legal representative receive the effects, it will be stated in the report. If the soldier leave no effects, the fact will be reported.

Par. 153. Should the effects of a deceased non-commissioned officer or soldier not be administered upon within a short period after his decease, they shall be disposed of by a Council of Administration, under the authority of the commanding officer of the post, and the proceeds deposited with the Paymaster, to the credit of the United States, until they shall be claimed by the legal representatives of the deceased.

Par. 154. In all such cases of sales by the Council of Administration, a statement in detail, or account of the proceeds, duly certified by the Council and commanding officer, accompanied by the Paymaster's receipt for the proceeds, will be forwarded by the commanding officer to the Adjutant General. The statement will be endorsed, "Report of the proceeds of the effects of ——— ———, late of company (—,) ——— regiment of ———, who died at ———, the —— day of ———, 186–."

NOTE 1.—The effects in all cases, when called for, should be turned over to the legal representative, without further authority from the Adjutant General. When the effects are turned over to the relatives of the deceased before these inventories are sent to the Adjutant General, their receipts therefor should be attached to the inventories. In all other cases, one copy will be sent with a letter of transmittal direct to the Adjutant General, and a duplicate retained by the officer.

NOTE 2.—Particular care should be taken to take receipts in duplicate from the Paymaster for any funds turned over to him; one copy should be sent direct to the Adjutant General and one retained by the officer.

INVENTORY OF THE EFFECTS

OF

Capt. Thos G. Freeman

Late of Company "M"

11th *Reg't of* U.S.C.A. (H)

Volunteers, who died at Regt. Hos. Camp Parapet La.

on the 4th *day of* August *1864.*

JUL 6 1871

Inventory of the effects of Amos G Freeman late a Corporal of Captain Southwicks Company M of the 8" Regiment of U.S.C.A.(H) Volunteers, who was enrolled as a Private at Providence in the State of Rhode Island on the 21" day of November 1863, and mustered into the service of the United States as a private on the 4" day of February 1864, at Prov. R.I. in Company M, 8" Regiment of U.S.C.A.(H) Volunteers, to serve 3 years or during the war; he was born in Utica in the State of New York; he was 25 years of age, 5- feet 7 1/2 inches high, Mulatto complexion, Blk eyes, Blk hair, and by occupation, when enrolled, a Laborer; he died in Regimental Hospital, at Camp Parapet La on the 24th day of August 1864, by reason of Typhoid Fever

INVENTORY.

Articles.	No.	Articles.	No.	Articles.	No.
Hats		Pairs trowsers	1	Knapsacks	
Caps		Pairs flannel drawers		Rub. blan ket	1
Forage caps		Pairs cotton drawers			
Great coats	1	Flannel shirts	1		
Uniform coats	1	Cotton shirts			
Uniform jackets		Pairs boots	1		
Flannel sack coats		Pairs shoes	1		
Blouses		Pairs socks			
Stable frocks		Blankets	1	Money. Specie	$
Fatigue overalls		Haversacks		Notes	$

I certify, on honor, that the above inventory comprises all the effects of .....
....., deceased, and that the effects are in the hands
of ..... at .....
..... to be disposed of by a Council of Administration.
.....

(duplicates.)

.....

.....

Station: ..... *Commanding the Company.*

Date: .....

[A. G. O. No. 104.]

ARTICLES OF WAR.

ART. 95. When any non-commissioned officer or soldier shall die, or be killed in the service of the United States, the then commanding officer of the troop or company shall, in the presence of two other commissioned officers, take an account of what effects he died possessed of, above his arms and accoutrements, and transmit the same to the office of the Department of War, which said effects are to be accounted for, and paid to the representatives of such deceased non-commissioned officer or soldier. And in case any of the officers, so authorized to take care of the effects of deceased officers and soldiers, should, before they have accounted to their representatives for the same, have occasion to leave the regiment or post, by preferment or otherwise, they shall, before they be permitted to quit the same, deposit in the hands of the commanding officer, or of the assistant military agent, all the effects of such deceased non-commissioned officers and soldiers, in order that the same may be secured for, and paid to, their respective representatives.

ARMY REGULATIONS—EDITION OF 1861.

DECEASED SOLDIERS.

Par. 152. Inventories of the effects of deceased non-commissioned officers and soldiers, required by the 95th Article of War, will be forwarded to the Adjutant General, by the commander of the company to which the deceased belonged, and a duplicate of the same to the colonel of the regiment. Final statements of pay, clothing, &c., will be sent with the inventories. When a soldier dies at a post or station absent from his company, it will be the duty of his immediate commander to furnish the required inventory, and, at the same time, to forward to the commanding officer of the company to which the soldier belonged, a report of his death, specifying the date, place, and cause; to what time he was last paid, and the money or other effects in his possession at the time of his decease; which report will be noted on the next muster roll of the company to which the man belonged. Each inventory will be endorsed, "Inventory of the effects of ——— ———, late of company (—) ——— regiment of ———, who died at ———, the——— day of ———, 186–." If a legal representative receive the effects, it will be stated in the report. If the soldier leave no effects, the fact will be reported.

Par. 153. Should the effects of a deceased non-commissioned officer or soldier not be administered upon within a short period after his decease, they shall be disposed of by a Council of Administration, under the authority of the commanding officer of the post, and the proceeds deposited with the Paymaster, to the credit of the United States, until they shall be claimed by the legal representatives of the deceased.

Par. 154. In all such cases of sales by the Council of Administration, a statement in detail, or account of the proceeds, duly certified by the Council and commanding officer, accompanied by the Paymaster's receipt for the proceeds, will be forwarded by the commanding officer to the Adjutant General. The statement will be endorsed, "Report of the proceeds of the effects of ——— ———, late of company (—) ——— regiment of ———, who died at ———, the —— day of ———, 186–."

NOTE 1.—The effects in all cases, when called for, should be turned over to the legal representative, without further authority from the Adjutant General. When the effects are turned over to the relatives of the deceased before these inventories are sent to the Adjutant General, their receipts therefor should be attached to the inventories. In all other cases, one copy will be sent with a letter of transmittal direct to the Adjutant General, and a duplicate retained by the officer.

NOTE 2.—Particular care should be taken to take receipts in duplicate from the Paymaster for any funds turned over to him; one copy should be sent direct to the Adjutant General and one retained by the officer.

INVENTORY OF THE EFFECTS

OF

Corp'l Amos G. Freeman

Late of Company M

8th *Reg't of* U.S.C.A. Hy

Volunteers, who died at Camp Parapet La

on the 11th *day of* August *186*4.

JUL 1 1871

Inventory of the effects of Amos G. Freeman late a Corporal of Captain H. K. Southwicks Company M of the 8th Regiment of U. S. C. A. Heavy Volunteers, who was enrolled as a Private at Providence in the State of Rhode Island on the 21st day of November 1864, and mustered into the service of the United States as a Private on the 4th day of February 1864, at Prov. R. I. in Company M, 8th Regiment of U. S. C. A. Hy Volunteers, to serve Three years or during the war; he was born in Ulster in the State of New York; he was 23 years of age, 5 feet 7 1/2 inches high, Mulatto complexion, Blk eyes, Blk hair, and by occupation, when enrolled, a Laborer; he died in Regimental Hospital, at Camp Parapet La. on the 4th day of August 1864, by reason of Typhoid Fever

INVENTORY.

Articles.	No.	Articles.	No.	Articles.	No.
Hats		Pairs trowsers	1	Knapsacks	1
Caps		Pairs flannel drawers		Rubber Blanket	1
Forage caps		Pairs cotton drawers		Vest	1
Great coats	1	Flannel shirts	1		
Uniform coats	1	Cotton shirts			
Uniform jackets		Pairs boots	1		
Flannel sack coats		Pairs shoes	1		
Blouses		Pairs socks			
Stable frocks		Blankets	1		
Fatigue overalls		Haversacks			

Money.		
	Specie	$
	Notes	$

I CERTIFY, ON HONOR, that the above inventory comprises all the effects of Corpl Amos G. Freeman, deceased, and that the effects are in the hands of The 2nd Sergeant of Co. M at Camp Parapet La to be disposed of by a Council of Administration.

(DUPLICATES.)

Warren Ralph
1st Lieutenant
Commanding the Company.

STATION: Camp Parapet La

DATE: August 5th 1864

[A. G. O. No. 104.]

Camp Parapet La. July
Clegget Pr Pants Aug 4 1864

Inventory of
Effect of Pr
Amos G [illegible]

Inventory of Effects of Corporal
Amos G Dennison

1 Great Coat
1 Do. Coat
1 Pr Pants
1 Vest
1 Pr Boots
1 Pr Shoes
1 Woolen Blanket
1 Rubber Do
1 Shelter Tent

Wm. P. Yale
1st Lt. Comdg Co K
5th Vermont

Typhoid Fever Aug 4th 64
Regt Hospl

[redacted]

Smith	Smith

CARD NUMBERS.

1	6188941	26	
2	6189089	27	
3	6189236	28	
4	6189382	29	
5	6189525	30	
6	6189669	31	
7	6189805	32	
8	6189934	33	
9	6190060	34	
10	6190192	35	
11	6190323	36	
12	6190454	37	1
13	6190581	38	
14	9134885	39	
15		40	
16		41	
17		42	
18		43	
19		44	
20		45	
21		46	
22		47	
23		48	
24		49	
25		50	

Book Mark:

See also

F | 11 H. Art'y. | U.S.C.T.

Andrew Freeman

, Co. E, 11 Reg't U. S. Col'd H. Art'y.

Appears on

Company Descriptive Book

of the organization named above.

DESCRIPTION.

Age 18 years; height 5 feet 9½ inches.

Complexion Dk.

Eyes Dk.; hair Dk.

Where born Sand Lake, N. Y.

Occupation Farmer.

ENLISTMENT.

When Sept. 27, 1863.

Where Prov. R. I.

By whom J. C. Engley; term 3 y'rs.

Remarks:

O. J. Markle, Copyist.

(383g)

F | 11 H. Art'y. | U.S.C.T.

Andrew Freeman

Pvt., Co. E, 14 Reg't R. I. Col'd H. Art'y.*

Age 18 years.

Appears on

Company Muster-in Roll

of the organization named above. Roll dated Providence, R. I., Oct. 5, 1863.

Muster-in to date Oct. 5, 1863.

Joined for duty and enrolled:

When Sept. 27, 186 .

Where Prov., R. I.

Period 3 years.

Valuation of horse, $ 100

Valuation of horse equipments, $ 100

Remarks: Sand Lake, N. Y.

* This organization subsequently became Co. E, 11 Reg't U. S. Colored Heavy Artillery.

Book mark:

Chandler

Copyist.

F | 11 H. Art'y. | U.S.C.T.

Andrew Freeman

Pvt., Co. E, 14 Reg't R. I. Col'd H. Art'y.*

Appears on

Company Muster Roll

for Oct. 5 to Dec. 31, 1863.

Present or absent Present

Stoppage, $ 100 for

Due Gov't, $ 100 for

Valuation of horse, $ 100

Valuation of horse equipments, $ 100

Remarks:

*This organization subsequently became Co. E, 11 Reg't U. S. Col'd Heavy Artillery.

Book mark:

Chandler

Copyist.

F | 11 H. Art'y. | U.S.C.T.

Andrew Freeman

Pvt., Co. E, 14 Reg't R. I. Col'd H. Art'y.*

Appears on

Company Muster Roll

for Jan. & Feb., 1864.

Present or absent Present

Stoppage, $ 100 for

Due Gov't, $ 100 for

Valuation of horse, $ 100

Valuation of horse equipments, $ 100

Remarks: Stop for one Roll of Equipments. Due Laundress $.75

*This organization subsequently became Co. E, 11 Reg't U. S. Col'd Heavy Artillery.

Book mark:

C Chandler

Copyist.

F | 11 H. Art'y. | U.S.C.T.

Andrew Freeman

Pvt., Co. E, 14 Reg't R. I. Col'd H. Art'y.*

Appears on

Company Muster Roll

for Mch. & April, 1864.

Present or absent Present

Stoppage, $ 100 for

Due Gov't, $ 100 for

Valuation of horse, $ 100

Valuation of horse equipments, $ 100

Remarks: Stop for 1 Set of Equipments,
Due Laundress .75

*This organization subsequently became Co. E, 11 Reg't U. S. Col'd Heavy Artillery.

Book mark:

C Chandler
Copyist.

F | **11 H. Art'y. U.S.C.T.**

Andrew Freeman

Pvt, Co. E, 8 Reg't U. S. Col'd H. Art'y.*

Appears on

Company Muster Roll

for May & June, 1864

Present or absent Present

Stoppage, $ 100 for

Due Gov't, $ 100 for

Valuation of horse, $ 100

Valuation of horse equipments, $ 100

Remarks: Stops for one set of equipments complete, due Laundress .75~

† This organization subsequently became Co. E, 11 Reg't U. S. Colored Heavy Artillery.

Book mark:

C Chandler

Copyist.

F | 11 H. Art'y. | U.S.C.T.

Andrew Freeman

Pvt., Co. E, 11 Reg't U. S. Col'd H. Art'y.

Appears on

Company Muster Roll

for Jul. & Aug., 1864.

Present or absent Present

Stoppage, $ 100 for

Due Gov't, $ 100 for

Valuation of horse, $ 100

Valuation of horse equipments, $ 100

Remarks: Fell Sept 19 - 1861
Stop for one retransmitted 3.80

Book mark :

Hathaway

(358) *Copyist.*

E | **11 H. Art'y.** | **U.S.C.T.**

Sigbert Jackson

Pvt., Co. **E**, 11 Reg't U. S. Col'd H. Art'y.

Appears on

Company Muster Roll

for Sept & Oct., 1864.

Present or absent Present

Stoppage, $.....100 for .....

.....

Due Gov't, $.....100 for .....

.....

Valuation of horse, $.....100

Valuation of horse equipments, $.....100

Remarks: Clothing Acct Regt Inst to 8.30

Face Apl 19 - 1864

Drg Lauandress 75

.....

.....

.....

.....

.....

.....

Book mark: .....

Hathaway

Copyist.

F | 11 H. Art'y. | U.S.C.T.

Andrew Freeman

Pvt., Co. E, 11 Reg't U. S. Col'd H. Art'y.

Appears on

Company Muster Roll

for Nov & Dec, 186 4.

Present or absent Present

Stoppage, $ 100 for

Due Gov't, $ 100 for

Valuation of horse, $ 100

Valuation of horse equipments, $ 100

Remarks: Enl'd Sept 19 - 64
Slop for 1 set Equipments
$3.75
Due Laundress 75 -

Book mark:

Patterson

F | 11 H. Art'y. | U.S.C.T.

Patrick Freeman

Pvt., Co. E, 11 Reg't U. S. Col'd H. Art'y.

Appears on

Company Muster Roll

for Jan. & Feb., 1865.

Present or absent Present

Stoppage, $ 23/100 for Blanket

1 screw driver

Due Gov't, $ 100 for

Valuation of horse, $ 100

Valuation of horse equipments, $ 100

Remarks:

Book mark:

Halloway

 Copyist.

F | 11 H. Art'y. | U.S.C.T.

Edward Freeman

Pvt., Co. E, 11 Reg't U. S. Col'd H. Art'y.

Appears on

Company Muster Roll

for March & April, 1865.

Present or absent Present

Stoppage, $ 23/100 for screw driver

Due Gov't, $ 100 for

Valuation of horse, $ 100

Valuation of horse equipments, $ 100

Remarks:

Book mark:

J. Matthews

(358) Copyist.

F | 11 H. Art'y. | U.S.C.T.

Andrew Freeman

Priv., Co. E, 11 Reg't U. S. Col'd H. Art'y.

Appears on

Company Muster Roll

for May and June, 1865.

Present or absent Present.

Stoppage, $ 100 for

Due Gov't, $ 100 for

Valuation of horse, $ 100

Valuation of horse equipments, $ 100

Remarks:

Book mark:

 J. B. Jones Copyist.

F | 11 H. Art'y. | U.S.C.T.

Andrew Freeman

Pvt, Co. E, 11 Reg't U. S. Col'd H. Art'y.

Appears on

Company Muster Roll

for July and August, 1865.

Present or absent Present.

Stoppage, $ 100 for

Due Gov't, $ 100 for

Valuation of horse, $ 100

Valuation of horse equipments, $ 100

Remarks: Stop for one eagle, 02.

Book mark :

(358) J. B. Jones *Copyist.*

F | 11 H. Art'y. | U.S.C.T.

Andrew Freeman

Pvt., Co. E, 11 Reg't U. S. Col'd H. Art'y.

Appears on **Co. Muster-out Roll,** dated New Orleans, La., Oct. 2, 1865.

Muster-out to date Oct. 2, 1865.

Last paid to June 30, 1865.

Clothing account:

Last settled ....., 186 ; drawn since $ 100

Due soldier $ 19 78/100; due U. S. $ 100

Am't for cloth'g in kind or money adv'd $ 100

Due U. S. for arms, equipments, &c., $ 100

Bounty paid $ none 100; due $ 100 00/100

Remarks: Joined at Org'l Org'n, Stop for one musket & accts retained 6.00; one Mon bar 1.70; one eagle, 02.

Book mark: K 113, P. 60. '70

(361) J. S. B. James *Copyist.*

Fireman Andrew

P, Co. ——, 11 Reg't Mass

1 **Enclosures.**

Bed Cards	Final Statements
Burial Records	Furloughs or L. of A.
Certs. of Dis. for Discharge	Med. Certificates
C. M. Charges	Med. Des. Lists
Descriptive Lists	Orders
Discharge Certificates	Pris. of War Record
Enlistment Papers 1	Resignations

Other papers relating to—

Admission to Hosp'l	Furlough or L. of A.
Casualty Sheet	Med. Examination
Confinement	Misc. Information
Contracts	Pay or Clothing
Death or Effects	Personal Reports
Desertion	Rank
Discharge from Hosp'l	Transfer to Hosp'l
Discharge from Service	Transfer to V. R. C.
Duty	Transportation

DECLARATION OF RECRUIT.

I Andrew Freeman desiring to VOLUNTEER as a Soldier in the *ARMY OF THE UNITED STATES*, for the term of Three Yeard do declare that I am Eighteen years and months of age; that I have never been discharged from the United States service on account of disability or by sentence of a court martial, or by order, before the expiration of a term of enlistment; and I know of no impediment to my serving honestly and faithfully as a soldier for Three Yeard

Given at Prov R I

The 27th day of Sept 18 63

Witness:
Sgt May F McKeel

Andrew Freeman

No. 4414

Andrew Freeman

Volunteered at Prov R I

Sept

By

Regiment of Cavalry

enlistment; last served in Company ( ) *under the name of*

Reg't of

Discharged 1863

18

CONSENT IN CASE OF MINOR.

I, Do CERTIFY that I am the of ; that the said is years of age; and I do hereby freely give my CONSENT to his volunteering as a SOLDIER in the ARMY OF THE UNITED STATES for the period of

Given at

The day of

Witness

VOLUNTEER ENLISTMENT.

State of Rhode Island Town of Providence

I, Andrew Freman born in Sand Lake

in the State of New York aged Eighteen years, and by occupation a Farmer

DO HEREBY ACKNOWLEDGE to have volunteered this Twenty Seventh day of September 1863 to serve as a SOLDIER in the ARMY OF THE UNITED STATES OF AMERICA, for the period of Three Years, unless sooner discharged by proper authority: Do also agree to accept such bounty, pay, rations and clothing, as are, or may be, established, by law for volunteers. And I, Andrew Freman do solemnly swear, that I will bear true faith and allegiance to the *United States of America*, and that I will serve them honestly and faithfully against all their enemies or opposers whomsoever; and that I will observe and obey the orders of the President of the United States, and the orders of the officers appointed over me, according to the Rules and Articles of War.

Sworn and Subscribed to, at Prov R I Andrew Freeman

this 28th day of Sept 1863.

BEFORE S P Lamphear Capt 14th R I H A

I CERTIFY, ON HONOR, That I have carefully examined the above-named Volunteer, agreeable to the General Regulations of the Army, and that, in my opinion, he is free from all bodily defects and mental infirmity, which would, in any way, disqualify him from performing the duties of a soldier.

B. Carpenter EXAMINING SURGEON.

I CERTIFY, ON HONOR, That I have minutely inspected the Volunteer, Andrew Freman previously to his enlistment, and that he was entirely sober when enlisted; that to the best of my judgment and belief, he is of lawful age; and that, in accepting him as duly qualified to perform the duties of an able-bodied soldier, I have strictly observed the Regulations which govern the recruiting service. This soldier has Black *complexion*, is five *feet*, five 1/2 *inches high*. Black *eyes* Black *hair*,

14th *Regiment of* R. I. H. A. *Volunteers*,

RECRUITING OFFICER.

Co A, 11 U.S.Col'd H.Art'y.

Private	Private

CARD NUMBERS.

1	6182193	26	
2	6182339	27	
3	6182491	28	
4	6182633	29	
5	6182770	30	
6	6182984	31	
7	6183794	32	
8	9123806	33	
9	9123956	34	
10		35	
11		36	
12		37	
13		38	
14		39	
15		40	
16		41	
17		42	
18		43	
19		44	
20		45	
21		46	
22		47	
23		48	
24		49	
25		50	

Book Mark:

See also

F | 11 H. Art'y. | U.S.C.T.

Charles Freeman

, Co. A, 11 Reg't U. S. Col'd H. Art'y.

Appears on

Company Descriptive Book

of the organization named above.

DESCRIPTION.

Age 34 years; height 6 feet 2 inches.

Complexion Mulatto

Eyes Hazel; hair Blk

Where born Bristol R. I.

Occupation Fisherman

ENLISTMENT.

When Aug 12, 1863.

Where Providence

By whom W H Helme; term 3 y'rs.

Remarks: Asst to C & A Hospl
V. O. May 24/64
Descriptive list sent
Asst at C. A Hospl
N. O. July 19. 64

James

(3557) Copyist.

F | **11 H. Art'y.** | **U.S.C.T.**

Charles Freeman

_____, Co. A, 11 Reg't U. S. Col'd H. Art'y.

Appears on

Company Descriptive Book

of the organization named above.

DESCRIPTION.

Age 34 years; height 6 feet 2 inches.

Complexion Mulatto

Eyes Hazel; hair Blk

Where born Bristol R I

Occupation Fisherman

ENLISTMENT.

When Aug 12, 1863.

Where Providence

By whom Wilkeline; term 3 y'rs.

Remarks: ~~Rejected by Capt~~ ~~Sidney~~ X

Sent to C D Hosp 1 May 24/64. Resumption entry noted. Rec'd at the C D H Hospl in N. Orleans July 19. 64. B fever (intermittent) Final statements & inventory rendered. No effects. X as on book

Jones

(383v) Copyist.

F | 11 H. Art'y. | U.S.C.T.

Charles Freeman

Pvt., Co. A, 14 Reg't R. I. Col'd H. Art'y.*

Age 34 years.

Appears on

Company Muster-in Roll

of the organization named above. Roll dated Camp Smith near Providence R. I., Aug. 28, 1863.

Muster-in to date Aug 28, 1863.

Joined for duty and enrolled:

When July 12, 1863.

Where Providence

Period 3 years.

Valuation of horse, $ 100

Valuation of horse equipments, $ 100

Remarks: 1st District

* This organization subsequently became Co. C, 11 Reg't U. S. Colored Heavy Artillery.

Book mark:

Previtt

Copyist.

F | 11 H. Art'y. | U.S.C.T.

Charles Freeman

Pvt., Co. A, 14 Reg't R. I. Col'd H. Art'y.*

Appears on

Company Muster Roll

for Aug 28 to Dec 31, 1863.

Present or absent Present

Stoppage, $ 100 for

Due Gov't, $ 100 for

Valuation of horse, $ 100

Valuation of horse equipments, $ 100

Remarks:

*This organization subsequently became Co. A, 11 Reg't U. S. Colored Heavy Artillery.

Book mark:

Prewitt

(358) Copyist.

11 H. Art'y. | U.S.C.T.

Charles Freeman

Pvt., Co. A, 14 Reg't R. I. Col'd H. Art'y.*

Appears on

Company Muster Roll

for Jan & Feb, 1864.

Present or absent Present

Stoppage, $ 100 for

Due Gov't, $ 100 for

Valuation of horse, $ 100

Valuation of horse equipments, $ 100

Remarks:

*This organization subsequently became Co. A, 11 Reg't U. S. Colored Heavy Artillery.

Book mark:

Prewitt

(358) Copyist.

F | 11 H. Art'y. | U.S.C.T.

Charles Freeman

Pvt., Co. A, 14 Reg't R. I. Col'd H. Art'y.*

Appears on

Company Muster Roll

for Mch & Apl, 1864.

Present or absent Present

Stoppage, $ 100 for

Due Gov't, $ 100 for

Valuation of horse, $ 100

Valuation of horse equipments, $ 100

Remarks:

*This organization subsequently became Co. A, 11 Reg't U. S. Colored Heavy Artillery.

Book mark:

Prewitt

Copyist.

A | 11 H. Art'y. | U.S.C.T.

Charles Freeman

Pvt., Co. A, 8 Reg't U. S. Col'd H. Art'y.*

Appears on

Company Muster Roll

for May & June, 1864.

Present or absent Absent

Stoppage, $ 100 for

Due Gov't, $ 100 for

Valuation of horse, $ 100

Valuation of horse equipments, $ 100

Remarks: Left in Ind. Hospital
N. O. May. 24. 64.

† This organization subsequently became Co. A, 11 Reg't U. S. Colored Heavy Artillery.

Book mark:

Prewitt

Copyist.

G | 11 H. Art'y. | U.S.C.T.

Charles Overman

R., Co. A, 11 Reg't U. S. Col'd H. Art'y.

Appears on

Company Muster Roll

for July & Aug., 1864.

Present or absent.....

Stoppage, $.....100 for .....

.....

Due Gov't, $.....100 for .....

.....

Valuation of horse, $.....100

Valuation of horse equipments, $.....100

Remarks: Deceased

Died C. de A. Hospital N.O.

July 19. 1864

Inventory and Final State-

ments dated July 21. 1864

.....

.....

.....

.....

Book mark: No. 72 146 Dec. 19'64

R. Tilton

Copyist.

Pt. | **11 H. Art'y.** | **U.S.C.T.**

Charles Freeman,

Priv., Co. A., 11 Reg't U. S. Col'd H. Art'y.

Appears on **Co. Muster-out Roll,** dated

New Orleans, La., Oct. 2, 1865.

Muster-out to date ....., 186 .

Last paid to ....., 186 .

Clothing account:

Last settled....., 186 ; drawn since $.....100

Due soldier $.....100; due U. S. $.....100

Am't for cloth'g in kind or money adv'd $.....100

Due U. S. for arms, equipments, &c., $ 100

Bounty paid $.....100; due $.....100

Remarks: Joined Co. 4th Regt.
Died Ch. A. Hospital, N.O.,
July 1864.

Book mark: 72.146 N.B.V.

P.S. Brannan

(361) *Copyist.*

Freeman, Charles

P, Co. A, 11 Regt U.S.C.H.A.

6 Enclosures.

Bed Cards	Descriptive Lists
Burial Records 1	Final Statements 2
Certs. of Dis. for Discharge	Furloughs
C. M. Charges	Med. Des. Lists
Med. Certificates	Orders

Enlistment Papers 1

Other papers relating to—

Admission to Hosp'l	Furlough
Casualty Sheet (Officer's)	Med. Examination
Confinement	Misc. Information
Contracts	Pay or Clothing
Death or Effects 2	Personal Reports
Desertions	Rank
Discharge from Hosp'l	Transfer to Hosp'l
Discharge from Service	Transfer to V. R. C.
Duty	Transportation

DECLARATION OF RECRUIT.

I, Charles Freeman desiring to VOLUNTEER as a Soldier in the *ARMY OF THE UNITED STATES*, for the term of three years, do declare that I am 34 years and four months of age; that I have never been discharged from the United States service on account of disability or by sentence of a court martial, or by order, before the expiration of a term of enlistment; and I know of no impediment to my serving honestly and faithfully as a soldier for the First-Ledleon. Heavy Artillery.

Given at Providence
The twelveth day of August 1863.

Witness:
Fred. B. Haines.

Charles his X mark Freeman

No. 40
Charles Freeman
Volunteered at Providence R. I.
By
Regiment of
enlistment; last served in Company ( )
Reg't of
Discharged 18

JUL 11 1871 ADJUTANT

CONSENT IN CASE OF MINOR.

I, Do Certify that I am the
of ; that the said
is years of age; and I do hereby freely give
my CONSENT to his volunteering as a SOLDIER in the ARMY OF THE UNITED STATES for the period of

Given at
The day of

Witness:

VOLUNTEER ENLISTMENT.

State of Rhode Island Town of Bristol

I, Charles Freeman born in Bristol in the State of Rhode Island aged 34 years, and by occupation a fisherman DO HEREBY ACKNOWLEDGE to have volunteered this twelvth day of August 1863, to serve as a SOLDIER in the ARMY OF THE UNITED STATES of AMERICA, for the period of three years, unless sooner discharged by proper authority: Do also agree to accept such bounty, pay, rations and clothing, as are, or may be, established by law for volunteers. And I, Charles Freeman, do solemnly swear, that I will bear true faith and allegiance to the *United States of America*, and that I will serve them honestly and faithfully against all their enemies or opposers whomsoever; and that I will observe and obey the orders of the President of the United States, and the orders of the officers appointed over me, according to the Rules and Articles of War.

Sworn and subscribed to, at Providence
this twelvth day of August 1863.
BEFORE me Elysha Thayer
Justice of the Peace

Charles his X mark Freeman

I CERTIFY, ON HONOR, That I have carefully examined the above-named Volunteer, agreeably to the General Regulations of the Army, and that, in my opinion, he is free from all bodily defects and mental infirmity, which would, in any way, disqualify him from performing the duties of a soldier.

Johnson Sandwell M.D.
EXAMINING SURGEON.

I CERTIFY, ON HONOR, That I have minutely inspected the Volunteer, Charles Freeman previously to his enlistment, and that he was entirely sober when enlisted; that, to the best of my judgment and belief, he is of lawful age; and that, in accepting him as duly qualified to perform the duties of an able-bodied soldier, I have strictly observed the Regulations which govern the recruiting service. This soldier has hazel *eyes*, black *hair*, mulatto *complexion*, is 6 *feet*, 2 *inches high*.

First Colored Company Heavy Artillery,
REGIMENT Rhode Island *Volunteers*,

Wm H. Hehre
RECRUITING OFFICER.

Charles Freeman

Priv. A. 14. R. I. Col H. Art.

July 19. 64.

Corps d'Afrique

New-Orleans.

HOSPITAL RECORD,

SUBJECT TO THE

ORDER OF THE SURGEON GENERAL,

UNITED STATES ARMY.

N° 4, 8, C, J,

No. 1.

RECORD OF DEATH AND INTERMENT.

Name and number of person interred, Charles Freeman

Number and locality of the Grave, -

Hospital number of the deceased, - 1327

Regiment, Rank, and Company, - - 14 N.J. Vols Col. A. Brty, Ch. C. S.

Residence before enlistment, - - -

Conjugal condition (and if married, the residence of the widow,)

Cause of death, - - - - - - - Intermittant Fever

Age of the deceased, - - - - -

Nativity, - - - - - - - - - -

References, and Remarks, - -

Date of death and burial, - - - July 19th 1864

Duplicates sent to the Adjutant General of the United States Army, and to the Sexton of the ..... Cemetery.

Memoranda:

Duplicate

In duplicate List

ARTICLES OF WAR.

ART. 95. When any non-commissioned officer or soldier shall die, or be killed in the service of the United States, the then commanding officer of the troop or company shall, in the presence of two other commissioned officers, take an account of what effects he died possessed of, above his arms and accoutrements, and transmit the same to the office of the Department of War, which said effects are to be accounted for, and paid to the representatives of such deceased non-commissioned officer or soldier. And in case any of the officers, so authorized to take care of the effects of deceased officers and soldiers, should, before they have accounted to their representatives for the same, have occasion to leave the regiment or post, by preferment or otherwise, they shall, before they be permitted to quit the same, deposit in the hands of the commanding officer, or of the assistant military agent, all the effects of such deceased non-commissioned officers and soldiers, in order that the same may be secured for, and paid to, their respective representatives.

ARMY REGULATIONS—EDITION OF 1861.

DECEASED SOLDIERS.

Par. 152. Inventories of the effects of deceased non-commissioned officers and soldiers, required by the 95th Article of War, will be forwarded to the Adjutant General, by the commander of the company to which the deceased belonged, and a duplicate of the same to the colonel of the regiment. Final statements of pay, clothing, &c., will be sent with the inventories. When a soldier dies at a post or station absent from his company, it will be the duty of his immediate commander to furnish the required inventory, and, at the same time, to forward to the commanding officer of the company to which the soldier belonged, a report of his death, specifying the date, place, and cause; to what time he was last paid, and the money or other effects in his possession at the time of his decease; which report will be noted on the next muster roll of the company to which the man belonged. Each inventory will be endorsed, "Inventory of the effects of ——— ———, late of company (—) ——— regiment of ———, who died at ———, the——— day of ———, 186–." If a legal representative receive the effects, it will be stated in the report. If the soldier leave no effects, the fact will be reported.

Par. 153. Should the effects of a deceased non-commissioned officer or soldier not be administered upon within a short period after his decease, they shall be disposed of by a Council of Administration, under the authority of the commanding officer of the post, and the proceeds deposited with the Paymaster, to the credit of the United States, until they shall be claimed by the legal representatives of the deceased.

Par. 154. In all such cases of sales by the Council of Administration, a statement in detail, or account of the proceeds, duly certified by the Council and commanding officer, accompanied by the Paymaster's receipt for the proceeds, will be forwarded by the commanding officer to the Adjutant General. The statement will be endorsed, "Report of the proceeds of the effects of ——— ———, late of company (—) ——— regiment of ———, who died at ———, the —— day of ———, 186–."

NOTE 1.—The effects in all cases, when called for, should be turned over to the legal representative, without further authority from the Adjutant General. When the effects are turned over to the relatives of the deceased before these inventories are sent to the Adjutant General, their receipts therefor should be attached to the inventories. In all other cases, one copy will be sent with a letter of transmittal direct to the Adjutant General, and a duplicate retained by the officer.

NOTE 2.—Particular care should be taken to take receipts in duplicate from the Paymaster for any funds turned over to him; one copy should be sent direct to the Adjutant General and one retained by the officer.

INVENTORY OF THE EFFECTS

OF Private Charles Freeman

Late of Company A

14 Reg't of R. I. H. Art

Volunteers, who died at Camp D'Aff G. H. VA

on the 19 *day of* July 1864.

Inventory of the effects of Charles Freeman late a Inmate of Captain _____ Company A of the 8th Regiment of N. Y. Col. H. Art. Volunteers, who was enrolled as a _____ at _____ in the State of _____ on the _____ day of _____ 186 , and mustered into the service of the United States as a _____ on the _____ day of _____ 186 , at _____ in Company _____, _____ Regiment of _____ Volunteers, to serve _____ years or during the war; he was born in _____ in the State of _____; he was _____ years of age, _____ feet _____ inches high, _____ complexion, _____ eyes, _____ hair, and by occupation, when enrolled, a _____; he died in Corps D'Af. Gen. Hospl., at New Orleans La. on the 19 day of July 1864, by reason of Intermittent Fever

INVENTORY.

ARTICLES.	No.	ARTICLES.	No.	ARTICLES.	No.
Hats		Pairs trowsers		Knapsacks	
Caps		Pairs flannel drawers			
Forage caps		Pairs cotton drawers			
Great coats		Flannel shirts			
Uniform coats		Cotton shirts			
Uniform jackets		Pairs boots			
Flannel sack coats		Pairs shoes			
Blouses		Pairs socks			
Stable frocks		Blankets		MONEY. Specie	$
Fatigue overalls		Haversacks		Notes	$

I CERTIFY, ON HONOR, that the above inventory comprises all the effects of _____, deceased, and that the effects are in the hands of _____ at _____ to be disposed of by a Council of Administration.

_____

(DUPLICATES.)

_____

Surgeon in charge Corps D'Af. Gen. Hospl.
Commanding the Company.

STATION: New Orleans La

DATE: 19th July 1864.

[A. G. O. No. 104.]

FINAL STATEMENT

OF

Private Charles Freeman

11th Reg't of U S C A H

VOLUNTEERS.

Cert July 19th 64.

NOTE 1.—*Two* of these certificates (or duplicates) are to be given to each volunteer soldier who may be discharged previously to the discharge of his company, that he may at once receive from the Paymaster the pay, &c., due him, and the captain or other officer commanding the company will certify to the act of the delivery of the duplicate certificates; on these certificates the Soldier is "entitled to" his *discharge*, and should also present his discharge to the Paymaster to have the payment endorsed on it. The discharge is to be given back to the Soldier by the Paymaster; the latter only retaining as his voucher the duplicate certificates.

NOTE 2.—If the Soldier is entitled to pay for the use of his horse, the Company Commander will certify to that fact, and also to the time he has pay due for having been so mounted on his own horse.

NOTE 3.—Amounts due the Sutler and Laundress must be entered on the Muster Roll on which the death, desertion, &c., is reported, as well as on the final statement, otherwise the amount cannot be collected from the United States.

NOTE 4.– This blank will be used for deceased volunteers as well as others.

ADJUTANT GENERAL'S OFFICE.
Dec 19th 1864
Duplicate with inventory sent 2d Auditor.

RECEIVED, ADJUTANT GEN'S OFFICE
DEC 17 1864

Apt Dec

I certify, on honor, that Charles Freeman a Private of Captain Thos H Fry's Company (A) of the 11th Regiment of U.S.C.A Hy. VOLUNTEERS, of the State of Rhode Island, born in Bristol, State of Rhode Island aged 34 years; 6 feet 2 inches high; Mulatto complexion, Hazel eyes, Dark hair, and by occupation a Fisherman, having joined the company on its original organization at Providence R.I., and enrolled in it at the muster into the service of the United States at Providence R.I, on the Twenty eighth day of August, 1863, (~~or was mustered in service as a recruit, by~~ X X X X X X X X, at X X X, ~~on the~~ X X X ~~day of~~ X X X, ~~186 , to serve in the Regiment,~~) for the term of Three Years: and having served HONESTLY and FAITHFULLY with his Company in the field to the present date, is now entitled to a DISCHARGE by reason of Death Died at the C d' A Hospital New Orleans La July 19th 1864 of Fever

The said Charles Freeman was ~~last~~ never paid by Paymaster to include the ____ day of ____, 186 , and has pay due him from that time to the present date; he is entitled to pay and subsistence for TRAVELING to place of enrollment and whatever other allowances are authorized to volunteer soldiers, or militia, so discharged. He has received Fifty five $\frac{37}{100}$ dollars, advanced by the United States on account of CLOTHING.

There is to be stopped from him, on account of the State of ____, or other authorities for CLOTHING, &c., received on entering service, ____ $\frac{}{100}$ dollars; also, for expenses of SUBSISTENCE for TRAVELING from place of enrollment to the place of rendezvous, amounting to ____ $\frac{}{100}$ dollars: and on account of the United States for EXTRA CLOTHING received in kind from ____ and for other stoppages, viz: ____ amounting to ____ $\frac{}{100}$ dollars; and he has been SUBSISTED for TRAVELING to his place of enrollment, up to the ____, 186 .

He is indebted to ____, SUTLER, ____ $\frac{}{100}$ dollars.

He is indebted to ____, LAUNDRESS, ____ $\frac{}{100}$ dollars.

Given in Duplicate, at Fort Jackson, this 25th day of July, 1864.

Thos H Fry Capt
11th U.S.C.A. Hy.
Commanding Company.

[A. G. O. No. 95.]

2
3d Vt. 1864

FINAL STATEMENT

OF

Private Charles Freeman

11th Reg't of U. S. C. H.

VOLUNTEERS.

NOTE 1.—*Two* of these certificates (or duplicates) are to be given to each volunteer soldier who may be discharged previously to the discharge of his company, that he may at once receive from the Paymaster the pay, &c., due him, and the captain or other officer commanding the company will certify to the act of the delivery of the duplicate certificates; on these certificates the Soldier is "entitled to" his *discharge*, and should also present his discharge to the Paymaster to have the payment endorsed on it. The discharge is to be given back to the Soldier by the Paymaster; the latter only retaining as his voucher the duplicate certificates.

NOTE 2.—If the Soldier is entitled to pay for the use of his horse, the Company Commander will certify to that fact, and also to the time he has pay due for having been so mounted on his own horse.

NOTE 3.—Amounts due the Sutler and Laundress must be entered on the Muster Roll on which the death, desertion, &c., is reported, as well as on the final statement, otherwise the amount cannot be collected from the United States.

NOTE 4.—This blank will be used for deceased volunteers as well as others.

ASSISTANT CLERK
JUL 6
1871

1864

I certify, on honor, that Charles Freeman a Private of Captain Thos W Frys Company (A) of the 11th Regiment of U.S.C.A. (Hy) VOLUNTEERS, of the State of Rhode Island, born in Bristol, State of Rhode Island, aged 34 years; 6 feet 2 inches high; Mulatto complexion, Hazel eyes, Dark hair, and by occupation a Fisherman having joined the company on its original organization at Providence R I, and enrolled in it at the muster into the service of the United States at Providence R I, on the Twenty eighth day of August, 1863, ~~(or was mustered in service as a recruit, by~~ X X X W H Holmes, X X X X, 1863, at Providence, ~~on the~~ X weight X ~~day of~~ X X X, August ~~186~~, ~~to serve in the Regiment,~~) for the term of Three Years: and having served HONESTLY and FAITHFULLY with his Company in the field to the present date, is now entitled to a DISCHARGE by reason of Death Died at the U.S.A. Hospital N Orleans La July 19th 1864 of Fever. He was free April 19. 1861

The said Charles Freeman was ~~last~~ Fever paid by Paymaster ____ to include the 12 day of August, 1863, and has pay due him from that time to the present date; he is entitled to pay and subsistence for TRAVELING to place of enrollment and whatever other allowances are authorized to volunteer soldiers, or militia, so discharged. He has received Fifty five $\frac{37}{100}$ dollars, advanced by the United States on account of CLOTHING.

There is to be stopped from him, on account of the State of ____, or other authorities for CLOTHING, &c., received on entering service, ____$\frac{}{100}$ dollars; also, for expenses of SUBSISTENCE for TRAVELING from place of enrollment to the place of rendezvous, amounting to ____$\frac{}{100}$ dollars: and on account of the United States for EXTRA CLOTHING received in kind from ____ and for other stoppages, viz:

____

____ amounting to ____$\frac{}{100}$ dollars; and he has been SUBSISTED for TRAVELING to his place of enrollment, up to the ____, 186 .

He is indebted to ____, SUTLER, ____$\frac{}{100}$ dollars.

He is indebted to ____, LAUNDRESS, ____$\frac{}{100}$ dollars.

Given in Duplicate, at Fort Jackson, this 25th day of July, 1864.

Thos F Fry Capt

11th U.S.C.A. Hy.

Commanding Company.

[A. G. O. No. 95.]

ARTICLES OF WAR.

ART. 95. When any non-commissioned officer or soldier shall die, or be killed in the service of the United States, the then commanding officer of the troop or company shall, in the presence of two other commissioned officers, take an account of what effects he died possessed of, above his arms and accoutrements, and transmit the same to the office of the Department of War, which said effects are to be accounted for, and paid to the representatives of such deceased non-commissioned officer or soldier. And in case any of the officers, so authorized to take care of the effects of deceased officers and soldiers, should, before they have accounted to their representatives for the same, have occasion to leave the regiment or post, by preferment or otherwise, they shall, before they be permitted to quit the same, deposit in the hands of the commanding officer, or of the assistant military agent, all the effects of such deceased non-commissioned officers and soldiers, in order that the same may be secured for, and paid to, their respective representatives.

ARMY REGULATIONS—EDITION OF 1861.

DECEASED SOLDIERS.

Par. 152. Inventories of the effects of deceased non-commissioned officers and soldiers, required by the 95th Article of War, will be forwarded to the Adjutant General, by the commander of the company to which the deceased belonged, and a duplicate of the same to the colonel of the regiment. Final statements of pay, clothing, &c., will be sent with the inventories. When a soldier dies at a post or station absent from his company, it will be the duty of his immediate commander to furnish the required inventory, and, at the same time, to forward to the commanding officer of the company to which the soldier belonged, a report of his death, specifying the date, place, and cause; to what time he was last paid, and the money or other effects in his possession at the time of his decease; which report will be noted on the next muster roll of the company to which the man belonged. Each inventory will be endorsed, "Inventory of the effects of ——— ———, late of company (—) ——— regiment of ———, who died at ———, the ——— day of ———, 186-." If a legal representative receive the effects, it will be stated in the report. If the soldier leave no effects, the fact will be reported.

Par. 153. Should the effects of a deceased non-commissioned officer or soldier not be administered upon within a short period after his decease, they shall be disposed of by a Council of Administration, under the authority of the commanding officer of the post, and the proceeds deposited with the Paymaster, to the credit of the United States, until they shall be claimed by the legal representatives of the deceased.

Par. 154. In all such cases of sales by the Council of Administration, a statement in detail, or account of the proceeds, duly certified by the Council and commanding officer, accompanied by the Paymaster's receipt for the proceeds, will be forwarded by the commanding officer to the Adjutant General. The statement will be endorsed, "Report of the proceeds of the effects of ——— ———, late of company (—) ——— regiment of ———, who died at ———, the —— day of ———, 186-."

NOTE 1.—The effects in all cases, when called for, should be turned over to the legal representative, without further authority from the Adjutant General. When the effects are turned over to the relatives of the deceased before these inventories are sent to the Adjutant General, their receipts therefor should be attached to the inventories. In all other cases, one copy will be sent with a letter of transmittal direct to the Adjutant General, and a duplicate retained by the officer.

NOTE 2.—Particular care should be taken to take receipts in duplicate from the Paymaster for any funds turned over to him; one copy should be sent direct to the Adjutant General and one retained by the officer.

INVENTORY OF THE EFFECTS

OF

Charles Freeman

Late of Company A

14 *Reg't of* R. I. Hy. A.

Volunteers, who died at New Orleans La

on the 19th *day of* July 1864.

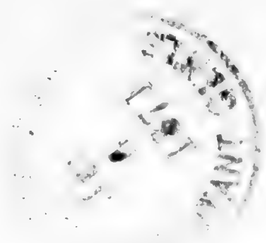

Inventory of the effects of Charles Freeman late a Private of Captain Thomas W Fay's Company A of the 14th Regiment of R. I. He. Arty. Volunteers, who was enrolled as a Private at Providence in the State of Rhode Island on the 12th day of August 1863, and mustered into the service of the United States as a Private on the 28 day of August 1863, at Providence in Company A, 14th Regiment of R. I. He. A. Volunteers, to serve three years or during the war; he was born in Bristol in the State of Rhode Island; he was 34 years of age, Six feet two inches high, Mulatto complexion, Hazel eyes, Black hair, and by occupation, when enrolled, a Fisherman; he died in Ed'l General Hospital, at New Orleans on the 19th day of July 1864, by reason of Intermittant Fever

INVENTORY.

Articles.	No.	Articles.	No.	Articles.	No.
Hats		Pairs trowsers		Knapsacks	
Caps		Pairs flannel drawers			
Forage caps		Pairs cotton drawers			
Great coats		Flannel shirts			
Uniform coats		Cotton shirts			
Uniform jackets		Pairs boots			
Flannel sack coats		Pairs shoes			
Blouses		Pairs socks			
Stable frocks		Blankets			
Fatigue overalls		Haversacks			
				Money. Specie	$
				Notes	$

I CERTIFY, ON HONOR, that the above inventory comprises all the effects of Private Charles Freeman, deceased, and that the effects are in the hands of Surgeon in Charge at Ed'l A U S Genl Hospital New Orleans La to be disposed of by a Council of Administration.

(DUPLICATES.)

Thos W Fay
Capt 11th U. S. C. A. Hy.
Commanding the Company.

STATION: Fort Jackson La

DATE: Feb 7th 1865

[A. G. O. No. 104.]

U.S., 11 U.S. Soldiers

Suicide | Private

CARD NUMBERS.

1	6187217	26	
2	6187373	27	
3	6187521	28	
4	6187669	29	
5	6187810	30	
6	6187944	31	
7	6188082	32	
8	6188218	33	
9	6188339	34	
10	6188451	35	
11	6188559	36	
12	6188669	37	
13	6188775	38	
14	91245165	39	
15	91247118	40	
16		41	
17		42	
18		43	
19		44	
20		45	
21		46	
22		47	
23		48	
24		49	
25		50	

Book Mark:

See also

F | 11 H. Art'y. | U.S.C.T.

Charles Freeman

, Co. D, 11 Reg't U. S. Col'd H. Art'y.

Appears on

Company Descriptive Book

of the organization named above.

DESCRIPTION.

Age 19 years; height 5 feet 9½ inches.

Complexion Dark

Eyes Dark; hair Dark

Where born Huntington, L. I.

Occupation Farmer.

ENLISTMENT.

When Sep. 18, 1863.

Where Prov., R. I.

By whom J. C. Engley; term 3 y'rs.

Remarks:

O. J. Markle.

(353y) Copyist.

F | 11 H. Art'y. | U.S.C.T.

Charles Freeman

, Co. D, 11 Reg't U. S. Col'd H. Art'y.

Appears on

Company Descriptive Book

of the organization named above.

DESCRIPTION.

Age 19 years; height 5 feet 9½ inches.

Complexion Dark

Eyes Dark; hair Dark

Where born Huntington, N.Y.

Occupation Farmer.

ENLISTMENT.

When Sept. 18, 186 .

Where Prov.

By whom J. W. Engley; term 3 y'rs.

Remarks:

O. J. Markle,

(3Sby) Copyist.

F | 11 H. Art'y. | U.S.C.T.

Charles Freeman

Pvt., Co. D, 14 Reg't R. I. Col'd H. Art'y.*

Age 19 years.

Appears on

Company Muster-in Roll

of the organization named above. Roll dated Providence R. I., Sept. 22, 1863.

Muster-in to date Sept. 22, 1863.

Joined for duty and enrolled:

When Sept. 18, 186 .

Where Prov. R. I.

Period 3 years.

Valuation of horse, $ 100

Valuation of horse equipments, $ 100

Remarks: Residence N. Y.

* This organization subsequently became Co. D, 11 Reg't U. S. Colored Heavy Artillery.

Book mark:

Jerrins

Copyist.

F | **11 H. Art'y.** | **U.S.C.T.**

Charles Freeman

Pvt., Co. D, 14 Reg't R. I. Col'd H. Art'y.*

Appears on

Company Muster Roll

for Sept. 22 to Dec. 31, 1863.

Present or absent Present

Stoppage, $.....100 for .....

.....

Due Gov't, $.....100 for .....

.....

Valuation of horse, $.....100

Valuation of horse equipments, $.....100

Remarks:.....

.....

*This organization subsequently became Co. D, 11 Reg't U. S. Col'd Heavy Artillery.

Book mark:.....

Lerring

(358) *Copyist.*

F | 11 H. Art'y. | U.S.C.T.

Charles Freeman

Pvt., Co. D, 14 Reg't R. I. Col'd H. Art'y.*

Appears on

Company Muster Roll

for Sept. 22/63 to Feb. 29, 1864.

Present or absent Present

Stoppage, $ 100 for

Due Gov't, $ 100 for

Valuation of horse, $ 100

Valuation of horse equipments, $ 100

Remarks: Canteen 41 c

*This organization subsequently became Co. D, 11 Reg't U. S. Col'd Heavy Artillery.

Book mark:

Copyist.

F. | 11 H. Art'y. | U.S.C.T.

Charles Freeman

Pvt., Co. D; 8 Reg't U. S. Col'd H. Art'y.*

Appears on

Company Muster Roll

for Mar & Apr, 1864.

Present or absent present

Stoppage, $ 100 for

Due Gov't, $ 100 for

Valuation of horse, $ 100

Valuation of horse equipments, $ 100

Remarks: Stop for canteen 41 ¢.

*This organization subsequently became Co. L, 11 Reg't U. S. Colored Heavy Artillery.

Book mark:

Wm E Allan

Copyist.

7. | 11 H. Art'y. | U.S.C.T.

Charles Freeman

Asst., Co. D, 8 Reg't U. S. Col'd H. Art'y.*

Appears on

Company Muster Roll

for May & June, 1864.

Present or absent Present

Stoppage, $ 100 for

Due Gov't, $ 100 for

Valuation of horse, $ 100

Valuation of horse equipments, $ 100

Remarks: Stop for Canteen 41.

*This organization subsequently became Co. D, 11 Reg't U. S. Colored Heavy Artillery.

Book mark:

Wm C Allen

Copyist.

F. | 11 H. Art'y. | U.S.C.T.

Charles Freeman

Pvt, Co. D, 11 Reg't U. S. Col'd H. Art'y.

Appears on

Company Muster Roll

for July & Aug, 1864.

Present or absent Present

Stoppage, $ 9/100 for Q & C

Due Gov't, $ 100 for

Valuation of horse, $ 100

Valuation of horse equipments, $ 100

Remarks: Free Apl 19/64

Book mark:

P Biddle

(358) *Copyist.*

F | 11 H. Art'y. | U.S.C.T.

Charles Freeman

Pvt, Co. D, 11 Reg't U. S. Col'd H. Art'y.

Appears on

Company Muster Roll

for Sept 1864, 186 4

Present or absent Present

Stoppage, $ 100 for

Due Gov't, $ 100 for

Valuation of horse, $ 100

Valuation of horse equipments, $ 100

Remarks:

Book mark:

Bradley

(358) *Copyist.*

F | 11 H. Art'y. | U.S.C.T.

Charles Freeman

Priv., Co. D, 11 Reg't U. S. Col'd H. Art'y.

Appears on

Company Muster Roll

for Nov. & Dec., 1864.

Present or absent Present

Stoppage, $ 100 for

Due Gov't, $ 100 for

Valuation of horse, $ 100

Valuation of horse equipments, $ 100

Remarks:

Book mark:

Grogan

(358) *Copyist.*

F | 11 H. Art'y. | U.S.C.T.

Charles Freeman
Pri -, Co. D, 11 Reg't U. S. Col'd H. Art'y.

Appears on

Company Muster Roll

for Jan & Feb., 1866.

Present or absent Present

Stoppage, $ 100 for

Due Gov't, $ 100 for

Valuation of horse, $ 100

Valuation of horse equipments, $ 100

Remarks:

Book mark:

Brogan

(358) *Copyist.*

F | 11 H. Art'y. | U.S.C.T.

Charles Freeman

Pri.; Co. D, 11 Reg't U. S. Col'd H. Art'y.

Appears on

Company Muster Roll

for March & April, 1865.

Present or absent Present

Stoppage, $ 100 for

Due Gov't, $ 100 for

Valuation of horse, $ 100

Valuation of horse equipments, $ 100

Remarks:

Book mark:

(358) Copyist.

F | 11 H. Art'y. | U.S.C.T.

Charles Freeman,

Pvt., Co. D, 11 Reg't U. S. Col'd H. Art'y.

Appears on

Company Muster Roll

for May & June, 1865.

Present or absent Present,

Stoppage, $ 45/100 for Ordnance

#1.05 for C. & G. E,

Due Gov't, $ 00/100 for

Valuation of horse, $ 00/100

Valuation of horse equipments, $ 00/100

Remarks:

Book mark:

C. F. Thompson.

Copyist.

F | 11 H.A. | U.S.C.T.

Charles Freeman

Pvt., Co. D, 11 Reg't U. S. Col'd H.A.

Appears on

Company Muster Roll

for July & Aug., 1865.

Present or absent Present,

Stoppage, $ 45/100 for ordnance

.05 for C. & G. E.

Due Gov't, $ 00/100 for

Valuation of horse, $ 00/100

Valuation of horse equipments, $ 00/100

Remarks:

Book mark:

C. F. Thompson,
Copyist.

F | 11 H. Art'y. | U.S.C.T.

Charles Freeman

Pvt., Co. D, 11 Reg't U. S. Col'd H. Art'y.

Appears on **Co. Muster-out Roll,** dated New Orleans, La., Oct 17, 1865.

Muster-out to date Oct. 7, 1865.

Last paid to Feb. 28, 1865.

Clothing account:

Last settled ....., 186 ; drawn since $ 100

Due soldier $ ..... 100 ; due U. S. $ 1 86/100

Am't for cloth'g in kind or money adv'd $ 100

Due U. S. for arms, equipments, &c., $ 50/100

Bounty paid $ 100 100 ; due $ 100 100

Remarks: Joined at org'l. organ. Stop Sumrod's Accts. with C. Screw driver, Tompion, Wiper, Cross Cannon, Letter and 2 Numbers lost, Free Apr. 19/65

Book mark: .....

C. F. Thompson.

(861) *Copyist.*

Stanford University

Private	Private

CARD NUMBERS.

1	6181354	26	
2	6181362	27	
3	6181389	28	
4	6190194	29	
5	6190324	30	
6	6190524	31	
7	6181967	32	
8	6181957	33	
9	6190683	34	
10	9124982	35	
11		36	
12		37	
13		38	
14		39	
15		40	
16		41	
17		42	
18		43	
19		44	
20		45	
21		46	
22		47	
23		48	
24		49	
25		50	

Book Mark:

See also

F | 11 H. Art'y. | U.S.C.T.

Charles Freeman

....., Co. E, 11 Reg't U. S. Col'd H. Art'y.

Appears on

Company Descriptive Book

of the organization named above.

DESCRIPTION.

Age 26 years; height 5 feet 7 inches.

Complexion Black

Eyes Black; hair Black

Where born Maryland.

Occupation Waiter

ENLISTMENT.

When Feb. 21, 1865.

Where Phila. Pa.

By whom C. W. Chaseey; term 3 y'rs.

Remarks: Joined the Company from depot of recruits April 14, 1865. Deserted at Donaldsonville, La., July 12, 1865. Asst to Co. Gds S. O. # 12 R. N. L.

O. F. Markle.

(383g) Copyist.

F. | 11 H. Art'y. | U.S.C.T.

* Charles Freeman

Appears with rank of Pvt on

Muster and Descriptive Roll of a Detachment of U. S. Vols. forwarded

for the 11 Reg't H. Art. Roll dated Providence R.I., Feb 24, 1865.

Where born Maryland

Age 26 y'rs; occupation Waiter

When enlisted Feb 21, 1865.

Where enlisted Prov. R. I.

For what period enlisted 3 years.

Eyes blk; hair blk

Complexion blk; height 5 ft. 7 in.

When mustered in Feb 21, 1865.

Where mustered in Prov. R.I.

Bounty paid $ 100; due $ 100

Where credited State R.I. at large

Company to which assigned

Remarks: Recruit, entitled to bounty

* Entry cancelled by Gov.

Book mark:

Collins

(339) Copyist.

F | 11 H. Art'y. | U.S.C.T.

Charles Freeman

Appears with rank of Pvt on

Muster and Descriptive Roll of a Detachment of U. S. Vols. forwarded

for the 11 Reg't U.S. C.H.Art'y. Roll dated

Providence R.I. Mch 3, 1865.

Where born Maryland

Age 26 y'rs; occupation Waiter

When enlisted Feb 21, 1865.

Where enlisted Providence R.I.

For what period enlisted 3 years.

Eyes blk; hair blk

Complexion blk; height 5 ft. 7 in.

When mustered in Feb 21, 1865.

Where mustered in Prov. R. I.

Bounty paid $100.00; due $200.00

Where credited State R.I. Statement

Company to which assigned

Remarks Recruit entitled to bounty-
Freeman broke out of the
one

Book mark:

Allen

(339) Copyist.

JAN. 14 ☆1891☆ 6181362

Barracks at Providence
& was afterwards arrested.
Expense of the arrest.
$30.00 for which a voucher
has been given. He was
in citizens clothes when
arrested, having thrown
his uniform away.

F | **11** H. Art'y. | **U.S.C.T.**

Charles Freeman

Appears with rank of Pvt on

Muster and Descriptive Roll of a Detachment of U. S. Vols. forwarded

for the 11 Reg't U.S. Hvy Art'y Roll dated

New Haven Conn, Mch 27, 1865.

Where born Maryland

Age 26 y'rs; occupation Waiter

When enlisted Feb 21, 1865.

Where enlisted Providence R. I.

For what period enlisted 3 years.

Eyes Blk; hair Blk

Complexion dark; height 5 ft. 7 in.

When mustered in Feb 21, 1865.

Where mustered in Providence R.I.

Bounty paid $100 100; due $ 100

Where credited *State R.I. at Large

Company to which assigned

Remarks:

*Inserted by compilers.

Book mark:

Record

(339) Copyist.

F | 11 H. Art'y. | U.S.C.T.

Myles Fullman

Pvt., Co. E, 11 Reg't U. S. Col'd H. Art'y.

Appears on

Company Muster Roll

for Mch. & Apl., 186 5.

Present or absent Present

Stoppage, $ 100 for

Due Gov't, $ 100 for

Valuation of horse, $ 100

Valuation of horse equipments, $ 100

Remarks: Enrolled Boston
Sept 1st Recruit
Rec'd $100 Bl. Bounty

Book mark:

Fullman

(358) *Copyist.*

F | 11 H. Art'y. | U.S.C.T.

Charles Freeman

Pvt., Co. E, 11 Reg't U. S. Col'd H. Art'y.

Appears on

Company Muster Roll

for May and June, 1865.

Present or absent Present.

Stoppage, $ 100 for

Due Gov't, $ 100 for

Valuation of horse, $ 100

Valuation of horse equipments, $ 100

Remarks: Joined from Depot of Recruits April 14/65, Received $100 U.S. Bounty.

Book mark:

(358) J. B. James Copyist.

I 11 H. Arty. | U.S.C.T.

Charles Freeman

Pvt., Co. E, 11 Reg't U. S. Col'd H. Arty.

Appears on

Descriptive List of Deserters

dated for July, 1863.

Deserted:

When July 12, 1863,

Where Donaldsonville, La.,

Arrested:

When ....., 186 .

Where .....

Remarks: .....

Book mark: .....

M. O. Gilbert

(351) Copyist.

I. | 11 H. Arty. | **U.S.C.T.**

Charles Freeman

Pvt., Co. E, 11 Reg't U. S. Col'd H. Arty.

Appears on

Descriptive List of Deserters

dated July 31, 1865.

Deserted:

When July 12, 1865.

Where Donaldsville, La.

Arrested:

When ....., 186 .

Where .....

Remarks: .....

Book mark: .....

H. O. Gilbert,

(351) *Copyist.*

F | 11 H. Art'y. | U.S.C.T.

Charles Freeman

Priv., Co. E, 11 Reg't U. S. Col'd H. Art'y.

Appears on

Company Muster Roll

for July and August, 1865.

Present or absent.....

Stoppage, $.....100 for .....

.....

Due Gov't, $.....100 for .....

.....

Valuation of horse, $.....100

Valuation of horse equipments, $.....100

Remarks: Deserted at Donaldsonville, La. July 12/65. Stop for one Springfield Rifled musket 19.25; one C.B. plate .08; one S. Driver .23; one sheet sack 2.25;

.....

Book mark: .....

(358) J. B. Jones Copyist.

F | 11 H. Arty | **U.S.C.T.**

Charles Freeman

Priv., Co. E, 11 Reg't U. S. Col'd H. Arty.

Appears on Co. Muster-out Roll, dated

New Orleans, La., Oct. 2, 1865.

Muster-out to date ....., 186 .

Last paid to ....., 186 .

Clothing account:

Last settled....., 186 ; drawn since $.....100

Due soldier $.....100; due U. S. $.....100

Am't for cloth'g in kind or money adv'd $.....100

Due U. S. for arms, equipments, &c., $.....100

Bounty paid $.....100; due $.....100

Remarks: Joined a recruit. Deserted at Donaldsonville, La, July 12/65. Stop for one Springfield Rifled musket, Cal. 58, 19.25; one C. B. Belt Plate .80; one B. Driver .23; one Cartridge 2.25. one canteen .65; one Cartridge .15.

Book mark: .....

J. B. James

(361) *Copyist.*

Freeman Charles

8, Co. ——, 1 Reg't U.S.C.H.A.

2 Enclosures.

Bed Cards	Final Statements
Burial Records	Furloughs or L. of A.
Certs. of Dis. for Discharge	Med. Certificates
C. M. Charges	Med. Des. Lists
Descriptive Lists	Orders
Discharge Certificates	Pris. of War Record
Enlistment Papers 2	Resignations

Other papers relating to—

Admission to Hosp'l	Furlough or L. of A.
Casualty Sheet	Med. Examination
Confinement	Misc. Information
Contracts	Pay or Clothing
Death or Effects	Personal Reports
Desertion	Rank
Discharge from Hosp'l	Transfer to Hosp'l
Discharge from Service	Transfer to V. R. C.
Duty	Transportation

NOTE 1.—This blank will be used for both enlistments and re-enlistments—enlistment of veterans, &c., in the volunteer service. They will be made out in duplicate in all cases—one to accompany the recruiting return of the superintendent (not the recruiting officer) to the Adjutant General, and one to accompany the accounts of the officer who pays bounty, &c. The Regiment and Company in which the soldier last served should be given on the back.

NOTE 2.—An enlistment holds to service. A muster-in must, in all cases, precede payment of pay, bounty, pension, &c. A muster-in roll must, in all cases, be filed in the Adjutant General's Office as evidence of muster-in. The mustering officer, commissary, or assistant commissary of musters, as the case may be, will countersign both enlistments as having mustered the soldier into the service of the United States before either of them is given to the disbursing officer.

DECLARATION OF RECRUIT.

I, Charles Freeman, desiring to VOLUNTEER as a Soldier in the **Army of the United States**, for the term of THREE YEARS, **Do Declare**, That I am 21 years and ..... months of age; that I have never been discharged from the United States service on account of disability or by sentence of a court martial, or by order before the expiration of a term of enlistment; and I know of no impediment to my serving honestly and faithfully as a soldier for three years.

GIVEN at Providence RI

the 21st day of Feb 1865

Witness: O Whitson

Charles his X Freeman
mark

11th U.S. Cold Artly

No. 32

Charles Freeman

Volunteered at Providence RI

Feb 21 1865

By Capt C Chace

Clerk Regiment of Mustered

1st enlistment; last served in Company ( )

Reg't of .....

Discharged ....., 18..

Enrolled & the State of R.I.
arrange

JUN 11 1865

CONSENT IN CASE OF MINOR.

I, ..., DO CERTIFY, That I am the ..... of ....., that the said ..... is ..... years of age; and I do hereby freely give my CONSENT to his volunteering as a SOLDIER in the ARMY OF THE UNITED STATES for the period of THREE YEARS.

GIVEN at .....

the ..... day of .....

Witness:

.....

.....

(A. G. O. No. 74 & 76.)

VOLUNTEER ENLISTMENT.

STATE OF Rhode Island TOWN OF Smithfield

I, Charles Freeman, born in ——— in the State of Maryland, aged 26 years, and by occupation a Waiter, DO HEREBY ACKNOWLEDGE to have volunteered this 21st day of July, 1865, to serve as a **Soldier** in the **Army of the United States of America,** for the period of *THREE YEARS*, unless sooner discharged by proper authority: Do also agree to accept such bounty, pay, rations, and clothing, as are, or may be, established by law for volunteers. And I, Charles Freeman, do solemnly swear, that I will bear true faith and allegiance to the ***United States of America,*** and that I will serve them honestly and faithfully against all their enemies or opposers whomsoever; and that I will observe and obey the orders of the President of the United States, and the orders of the officers appointed over me, according to the Rules and Articles of War.

Sworn and subscribed to, at Smithfield RI this 21st day of July, 1865, BEFORE Chs J Wheeler Justice of the Peace

Charles his X mark Freeman

I CERTIFY, ON HONOR, That I have carefully examined the above-named Volunteer, agreeably to the General Regulations of the Army, and that, in my opinion, he is free from all bodily defects and mental infirmity, which would in any way disqualify him from performing the duties of a soldier.

F. H. McKlean
2d Dist RI
EXAMINING SURGEON.

I CERTIFY, ON HONOR, That I have minutely inspected the Volunteer Chas Freeman previously to his enlistment, and that he was entirely sober when enlisted; that, to the best of my judgment and belief, he is of lawful age; and that, in accepting him as duly qualified to perform the duties of an able-bodied soldier, I have strictly observed the Regulations which govern the recruiting service. This soldier has Black *eyes,* Black *hair,* Black *complexion,* is 5 *feet* 7 *inches* high.

A. B. Chaney
Capt 2d Regt Md Volunteers,
2d Brig 2d Div 2d Corps
RECRUITING OFFICER.

(A. G. O. No. 71 & 76.)

Mustered into the service of the United States, for three years or during the war, from date of enlistment, in Company ——— Regiment of U.S. Cavalry Volunteers, on the 21st day of July, 1865, at Smithfield

C. B. Chaney
Capt 2d Brig 2d Div 2d Corps

NOTE 1.—This blank will be used for both enlistments and re-enlistments—enlistment of veterans, &c., &c., in the volunteer service. They will be made out in duplicate in all cases—one to accompany the recruiting return of the superintendent (not the recruiting officer) to the Adjutant General, and one to accompany the account of the officer who pays bounty, &c. The Regiment and Company in which the soldier last served should be given on the back.

NOTE 2.—An enlistment holds to service. A muster-in must, in all cases, precede payment of pay, bounty, pension, &c. A muster-in roll must, in all cases, be filed in the Adjutant General's Office as evidence of muster-in. The mustering officer, commissary, or assistant commissary of musters, as the case may be, will countersign both enlistments as having mustered the soldier into the service of the United States before either of them is given to the disbursing officer.

DECLARATION OF RECRUIT.

I, Killian Freeman, desiring to VOLUNTEER as a Soldier in the **Army of the United States**, for the term of THREE YEARS, **Do Declare**, That I am 26 years and ..... months of age; that I have never been discharged from the United States service on account of disability or by sentence of a court martial, or by order before the expiration of a term of enlistment; and I know of no impediment to my serving honestly and faithfully as a soldier for three years.

GIVEN at Providence RI

the 21st day of Oct 1861

Witness:

P Winsor

Charles his X mark Freeman

No. 4

Clerk, Recruit

Volunteered at Providence

February 21st

By Chas E Ellis

Clerk. Regiment of U S Cav

Co [illegible]

Discharged .....

4/62

.....

Enlisted 18 .....

Reg't of .....

( ) furloughed

Countersigned by the Mustering Officer

Chas E Ellis

Adjutant

Dec 11 1871

CONSENT IN CASE OF MINOR.

I, ..., DO CERTIFY, That I am the ..... of ....., that the said ..... is ..... years of age; and I do hereby freely give my CONSENT to his volanteering as a SOLDIER in the ARMY OF THE UNITED STATES for the period of THREE YEARS.

GIVEN at .....

the ..... day of .....

Witness:

.....

.....

(A. G. O. No. 74 & 76.)

VOLUNTEER ENLISTMENT.

STATE OF Rhode Island TOWN OF Bristol

I, Stanley Freeman, born in —
in the State of Maryland, aged 26 years,
and by occupation a Waiter, DO HEREBY ACKNOWLEDGE to have
volunteered this ~~July~~ 21st day of July, 1865,
to serve as a ***Soldier*** in the **Army of the United States of America,** for
the period of *THREE YEARS*, unless sooner discharged by proper authority:
Do also agree to accept such bounty, pay, rations, and clothing, as are, or may be,
established by law for volunteers. And I, Charles Freeman, do
solemnly swear, that I will bear true faith and allegiance to the ***United States
of America,*** and that I will serve them honestly and faithfully against all
their enemies or opposers whomsoever; and that I will observe and obey the
orders of the President of the United States, and the orders of the officers
appointed over me, according to the Rules and Articles of War.

Sworn and subscribed to, at Bristol R I } Charles his Freeman
this 21st day of July, 1865, } mark
BEFORE Chas J Wheeler
Justice of the Peace

I CERTIFY, ON HONOR, That I have carefully examined the above-named Volunteer, agreeably to the General Regulations of the Army, and that, in my opinion, he is free from all bodily defects and mental infirmity, which would in any way disqualify him from performing the duties of a soldier.

F. H. Pickman
2d Asst R S
EXAMINING SURGEON.

I CERTIFY, ON HONOR, That I have minutely inspected the Volunteer Chas Freeman previously to his enlistment, and that he was entirely sober when enlisted; that, to the best of my judgment and belief, he is of lawful age; and that, in accepting him as duly qualified to perform the duties of an able-bodied soldier, I have strictly observed the Regulations which govern the recruiting service. This soldier has Black *eyes,* Black *hair,* Black *complexion,* is 5 *feet* 7 *inches* high.

A. B. Chaddey
Captain *Regiment of* 1st Ma *Volunteers,*
2 Dist RO RECRUITING OFFICER.

(A. G. O. No. 71 & 76.)

Mustered into the service of the United States, for three years or during the war, from date of enlistment in Company Eleventh Regiment of U S Col'd Cav'y Volunteers, on the 21st day of July, 1865, at Bristol R I

A B Chaddey
Capt 1st Regt Mass Vol
2 Dist RO

Company

Co M, 11 U.S.Col'd H. Art'y

Private	Private

CARD NUMBERS.

1	6181107	26	
2	6201639	27	
3	6201708	28	
4	6201867	29	
5	6202024	30	
6	6202170	31	
7	6202321	32	
8	6202448	33	
9	6202569	34	
10	6202682	35	
11	6202795	36	
12	6202898	37	
13	9126046	38	
14		39	
15		40	
16		41	
17		42	
18		43	
19		44	
20		45	
21		46	
22		47	
23		48	
24		49	
25		50	

Book Mark:

See also

S- 2028407-P.O. M+m

J. D. Mark
Ex.

G | 11 H. arty | U.S.C.T.

Elmer E. Freeman

, Co. M, 11 Reg't U. S. Col'd H arty

Appears on

Company Descriptive Book

of the organization named above.

DESCRIPTION.

Age 40 years; height 5 feet 5½ inches.

Complexion DK

Eyes DK; hair Blk

Where born Wallingford Conn

Occupation Farmer

ENLISTMENT.

When Oct 8, 1863.

Where Prov R. I.

By whom J. B. Engly; term 3 y'rs.

Remarks: Mustered into U. S. service Feb 25/64

Mustered out

Copyist.

F | 11 H. Art'y. | U.S.C.T.

Elmus C Freeman

Pvt, Co. M, 14 Reg't R. I. Col'd H. Art'y.*

Appears on

Company Muster Roll

for 25 Jan th 29 Feb, 186 4.

Present or absent Present

Stoppage, $ 100 for

Due Gov't, $ 100 for

Valuation of horse, $ 100

Valuation of horse equipments, $ 100

Remarks: Attached for transportation to the 2nd Battalion

This organization subsequently became Co. M, 11 Reg't U. S. Colored Heavy Artillery.

Book mark:

(358) J Ulmann

Copyist.

F | 11 H. A. | U.S.C.T.

Elam O. Iremon

14" R.I. Cald H. A. / 11

_____, Co._____, 11 Reg't U. S. Col'd H. A.

Age 35 years.

Appears on a

Detachment Muster-in Roll

of the organization named above. Roll dated

Providence R.I., Feb 24, 1864.

Muster-in to date Feb 25, 1864

Joined for duty and enrolled:

When Feb 25, 1864.

Where Providence R.I.

Period 3 years.

Valuation of horse, $ 100

Valuation of horse equipments, $ 100

Remarks: Mustered in

Feb 25/64

Book mark: _____

---

(337) A N Jackson

Copyist.

F | 11 H. Art'y. | U.S.C.T.

Elum C Freeman

Pvt, Co. M, 14 Reg't R. I. Col'd H. Art'y.*

Appears on

Company Muster Roll

for Mch & Apl, 1864.

Present or absent Present

Stoppage, $ 100 for

Due Gov't, $ 100 for

Valuation of horse, $ 100

Valuation of horse equipments, $ 100

Remarks:

This organization subsequently became Co. M, 11 Reg't U. S. Colored Heavy Artillery.

Book mark:

(358) J Hammond
Copyist.

4 | 11 H. Art'y. | U.S.C.T.

Elum C. Freeman

Pvt., Co. M, 8 Reg't U. S. Col'd H. Art'y.*

Appears on

Company Muster Roll

for May & June, 1864.

Present or absent Present

Stoppage, $ 100 for

Due Gov't, $ 100 for

Valuation of horse, $ 100

Valuation of horse equipments, $ 100

Remarks:

† This organization subsequently became Co. M, 11 Reg't U. S. Colored Heavy Artillery.

Book mark:

(358) Tibbles

Copyist.

A | 11 H. Art'y. | U.S.C.T.

Elum B. Freeman

Pvt, Co. M, 11 Reg't U. S. Col'd H. Art'y.

Appears on

Company Muster Roll

for dated Sept. 1, 1864.

Present or absent Present

Stoppage, $ 100 for

Due Gov't, $ 100 for

Valuation of horse, $ 100

Valuation of horse equipments, $ 100

Remarks: $6 per Mo due from enlistment &c apl. 30/64 Free on 19th apl. 1861.

Book mark:

Tablex

(358) *Copyist.*

F | 11 H. Art'y. | U.S.C.T.

Edwin C Freeman

Co. K, Co. M, 11 Reg't U. S. Col'd H. Art'y.

Appears on

Company Muster Roll

for Sept & Oct, 1864.

Present or absent Present

Stoppage, $ 100 for

Due Gov't, $ 100 for

Valuation of horse, $ 100

Valuation of horse equipments, $ 100

Remarks: Camp's & Gar Equip $1.00

Book mark:

J. Hubbell
Copyist.

F | 11 H. Art'y. | U.S.C.T.

Elum C Pellman

Pvt., Co. M, 11 Reg't U. S. Col'd H. Art'y.

Appears on

Company Muster Roll

for Mar & Apr, 1864

Present or absent Present

Stoppage, $ 1 00/100 for Camp & Gar Eqpge

Due Gov't, $ 00/100 for

Valuation of horse, $ 00/100

Valuation of horse equipments, $ 00/100

Remarks:

Book mark:

A. Hubbell

(358) *Copyist.*

F | 11 H. Art'y. | U.S.C.T.

Elum E Freeman

Pvt., Co. M, 11 Reg't U. S. Col'd H. Art'y.

Appears on

Company Muster Roll

for Jan & Feb, 1865

Present or absent Present

Stoppage, $ 100 for

Due Gov't, $ 100 for

Valuation of horse, $ 100

Valuation of horse equipments, $ 100

Remarks: 02c for Ordnance Stores.

Book mark:

A Hubbell Copyist.

Jn | 11 H. Art'y. | U.S.C.T.

Edwin L Freeman

Pvt., Co. M, 11 Reg't U. S. Col'd H. Art'y.

Appears on

Company Muster Roll

for Mch & Apl, 1865.

Present or absent Present.

Stoppage, $ 100 for

Due Gov't, $ 100 for

Valuation of horse, $ 100

Valuation of horse equipments, $ 100

Remarks: 02 Cr for Ordnance Stores

Book mark:

N. Hubbell

Copyist.

F | 11 H. Art'y. | U.S.C.T.

Edwin C. Freeman

Pvt., Co. M, 11 Reg't U. S. Col'd H. Art'y.

Appears on

Company Muster Roll

for May & June, 1865.

Present or absent Present

Stoppage, $ 100 for

Due Gov't, $ 100 for

Valuation of horse, $ 100

Valuation of horse equipments, $ 100

Remarks:

Book mark:

Fennett

(358) *Copyist.*

F | 11 H. Art'y. | U.S.C.T.

Co. E

Chas. C. Freeman

Pvt., Co. M, 11 Reg't U. S. Col'd H. Art'y.

Appears on

Company Muster Roll

for July & Aug, 1865.

Present or absent Present

Stoppage, $ 100 for

Due Gov't, $ 100 for

Valuation of horse, $ 100

Valuation of horse equipments, $ 100

Remarks:

Book mark:

Forrett

(358) *Copyist.*

F | **11** H. Art'y. | **U.S.C.T.**

Edwin C. Freeman

Priv., Co. M, 11 Reg't U. S. Col'd H. Art'y.

Appears on **Co. Muster-out Roll,** dated New Orleans La., Oct 2, 1865.

Muster-out to date Oct 2, 1865.

Last paid to Feb 28, 1865.

Clothing account:

Last settled ....., 186 ; drawn since $ 100

Due soldier $ ..... 25/100 ; due U. S. $ 100

Am't for cloth'g in kind or money adv'd $ 100

Due U. S. for arms, equipments, &c., $ 2 00/100

Bounty paid $ ..... 100 ; due $ 100 00/100

Remarks: Joined at original organization Stop for one musket & accoutrements retained 1 Mosquito bar lost.

Book mark: .....

Fossett

Copyist.

Freeman, Elam

8, Co. F, 11 Regt. U.S.C.H.A.

1 Enclosures.

Bed Cards	Descriptive Lists
Burial Records	Final Statements
Certs. of Dis. for Discharge	Furloughs
C. M. Charges	Med. Des. Lists
Med. Certificates	Orders

Other papers relating to—

Admission to Hosp'l	Furlough 1
Casualty Sheet (Officer's)	Med. Examination
Confinement	Misc. Information
Contracts	Pay or Clothing
Death or Effects	Personal Reports
Desertions	Rank
Discharge from Hosp'l	Transfer to Hosp'l
Discharge from Service	Transfer to V. R. C.
Duty	Transportation

8 State of Rhode Island
Executive Dept
Oct. 8. 1863
Smith James Y
Gov. & Com. in Chief
Private Elum Freeman
granted a furlough and
ordered to report to
Maj Sanford

Furl.

State of Rhode Island.

Executive Department.

Providence Oct 8 1863

Col Vaile

Please give Private
Freeman of Company F a
furlough of seven days
and direct him to report to
Major Sanford immediately

James Y Smith
Gov

55 F., 11 U.S.Cold.Inf.Cy.

Female	Female

CARD NUMBERS.

1	6181517	26	
2	6181518	27	
3	6190736	28	
4	6190883	29	
5	6191030	30	
6	6191174	31	
7	6191318	32	
8	6191462	33	
9	6191596	34	
10	6191727	35	
11	6191849	36	
12	6191972	37	
13	6192103	38	
14	6192233	39	
15	6192357	40	
16	9125036	41	
17		42	
18		43	
19		44	
20		45	
21		46	
22		47	
23		48	
24		49	
25		50	

Book Mark:

See also

S. 2030657 P.O.m.m

ss. to Mrs. Raymond H. Nigreney 30 Culvert St.,
Torrington, Conn. 5/14/32 J.D.M.

J. D. Mark
Cap.

F | 11 H. Art'y. | U.S.C.T.

Frederic Freeman

Pvt., Co. F, 11 Reg't U. S. Col'd H. Art'y.

Appears on **Co. Muster-out Roll,** dated New Orleans La. Oct. 7 1865.

Muster-out to date Oct. 2, 1865.

Last paid to June 30, 1865.

Clothing account:

Last settled ....., 186 ; drawn since $ 100

Due soldier $ ..... 100; due U. S. $ 6. 81 100

Am't for cloth'g in kind or money adv'd $ 100

Due U. S. for arms, equipments, &c., $ x 10. 25 100

Bounty paid $ None 100; due $ 100. 00 100

Remarks: Joined at Brgn. Brgn, x Stop for one mus: Ret rects. retained for bed sack, Mosquito bar sack.

Book mark:

Leib

(361) *Copyist.*

F | 11 H. Art'y. | U.S.C.T.

Frederick Freeman

F, Co. F, 11 Reg't U. S. Col'd H. Art'y.

Appears on

Company Muster Roll

for July & Aug., 1865.

Present or absent Present.

Stoppage, $ 100 for

Due Gov't, $ 100 for

Valuation of horse, $ 100

Valuation of horse equipments, $ 100

Remarks:

Book mark:

(358)

Louis
Copyist.

F. | 11 H. Art'y. | U.S.C.T.

Frederick G. Freeman

Pvt., Co. F, 11 Reg't U. S. Col'd H. Art'y.

Appears on

Company Muster Roll

for May & June, 1865.

Present or absent Present.

Stoppage, $ 100 for

Due Gov't, $ 100 for

Valuation of horse, $ 100

Valuation of horse equipments, $ 100

Remarks: Stop. for wifes Rations. Mos. Bar $1.70.

Book mark:

Reid

(358) Copyist.

F | 11 H. Art'y. | U.S.C.T.

Frederick Freeman.

Pvt., Co. F, 11 Reg't U. S. Col'd H. Art'y.

Appears on

Company Muster Roll

for Mar. and Apr., 1865.

Present or absent Present.

Stoppage, $ 100 for

Due Gov't, $ 100 for

Valuation of horse, $ 100

Valuation of horse equipments, $ 100

Remarks: Stop for wiper. 20

Screwdriver. 23 canteen. $1

Book mark:

Exline.

(358) *Copyist.*

F | 11 H. Art'y. | U.S.C.T.

Frederick Freeman.

Pvt., Co. F, 11 Reg't U. S. Col'd H. Art'y.

Appears on

Company Muster Roll

for Jan. and Feb., 1865.

Present or absent Present.

Stoppage, $ 100 for

Due Gov't, $ 100 for

Valuation of horse, $ 100

Valuation of horse equipments, $ 100

Remarks: Stop for screwdriver. 25
Canteen. 41

Book mark:

Exline.

(358) *Copyist.*

F | 11 H. Art'y. | U.S.C.T.

Frederick Freeman.

Pvt., Co. F, 11 Reg't U. S. Col'd H. Art'y.

Appears on

Company Muster Roll

for Nov. and Dec., 1864.

Present or absent Present.

Stoppage, $ 100 for

Due Gov't, $ 100 for

Valuation of horse, $ 100

Valuation of horse equipments, $ 100

Remarks: Stop for arrears 20
Cents 12 screwdriver
canteen 41, Free April 19/64

Book mark:

Collins.

(358) *Copyist.*

F | **11 H. Art'y.** | **U.S.C.T.**

Frederick Freeman.

Pvt., Co. F, 11 Reg't U. S. Col'd H. Art'y.

Appears on

Company Muster Roll

for *Sept. and Oct.*, 186*4*.

Present or absent *Present.*

Stoppage, $ 100 for

Due Gov't, $ 100 for

Valuation of horse, $ 100

Valuation of horse equipments, $ 100

Remarks: *Stop for wiper. 20 S. conc. 12*
Free April 19/61.

Book mark:

Ekins.

Copyist.

Vt | 11 H. Art'y. | U.S.C.T.

Frederic Freeman.

Pvt., Co. F, 11 Reg't U. S. Col'd H. Art'y.

Appears on

Company Muster Roll

for July and Augt, 186 4.

Present or absent Present.

Stoppage, $ 100 for

Due Gov't, $ 100 for

Valuation of horse, $ 100

Valuation of horse equipments, $ 100

Remarks: Mustered in Sept. 20, 63 Convd 12 Pres April 12/64

Book mark:

Enlisted.

Copyist.

F | 11 H. Art'y. | U.S.C.T.

Frederick Freeman

Pvt, Co. F, 8 Reg't U. S. Col'd H. Art'y.*

Appears on

Company Muster Roll

for May & June, 1864.

Present or absent Present

Stoppage, $ 100 for

Due Gov't, $ 100 for

Valuation of horse, $ 100

Valuation of horse equipments, $ 100

Remarks: Left for one
Wiper called upon
Cook.

† This organization subsequently became Co. F, 11 Reg't U. S. Colored Heavy Artillery.

Book mark:

J. Neal

(358) *Copyist.*

F | 11 H. Art'y. | U.S.C.T.

Frederick Freeman

Pri., Co. F, 14 Reg't R. I. Col'd H. Art'y.*

Appears on

Company Muster Roll

for Mar & Apr, 1864

Present or absent Present

Stoppage, $.....100 for .....

.....

.....

Due Gov't, $.....100 for .....

.....

Valuation of horse, $.....100

Valuation of horse equipments, $.....100

Remarks:.....

.....

.....

.....

.....

.....

.....

.....

* This organization subsequently became Co. F. 11 Reg't U. S. Colored Heavy Artillery.

Book mark:.....

J Mud

Copyist.

F | 11 H. Art'y. | U.S.C.T.

Frederick Freeman

Pri., Co. F, 14 Reg't R. I. Col'd H. Art'y.*

Appears on

Company Muster Roll

for Jan & Feb, 1864

Present or absent Present

Stoppage, $.....100 for .....

.....

Due Gov't, $.....100 for .....

.....

Valuation of horse, $.....100

Valuation of horse equipments, $.....100

Remarks:.....

.....

.....

.....

.....

.....

.....

* This organization subsequently became Co. F. 11 Reg't U. S. Colored Heavy Artillery.

Book mark:.....

.....

(358)

Copyist.

F | 11 H. Art'y. | U.S.C.T.

Frederick Freeman

Pri, Co. F, 14 Reg't R. I. Col'd H. Art'y.*

Appears on

Company Muster Roll

for Oct 20 to Dec 31, 1863

Present or absent Present

Stoppage, $.....100 for .....

.....

Due Gov't, $.....100 for .....

.....

Valuation of horse, $.....100

Valuation of horse equipments, $.....100

Remarks: Drafted 4th Dist Conn.

.....

.....

.....

.....

.....

* This organization subsequently became Co. F. 11 Reg't U. S. Colored Heavy Artillery.

Book mark: .....

S J Neal

(358) *Copyist.*

E | 11 H. Art'y. | U.S.C.T.

Frederick Freeman

Pvt., Co. H., 14 Reg't R. I. Col'd H. Art'y.*

Age 21 years.

Appears on

Company Muster-in Roll

of the organization named above. Roll dated Providence R.I. Oct 20, 1863.

Muster-in to date Oct 20, 1863.

Joined for duty ~~and~~ enrolled:

When Aug 22, 186 .

Where Mt Hamilton

Period 3 years.

Valuation of horse, $ 100

Valuation of horse equipments, $ 100

Remarks: Drafted at Mt Hamilton 2d District

---

* This organization subsequently became Co. F, 11 Reg't U. S. Colored Heavy Artillery.

Book mark:

A Neal

(356) *Copyist.*

F | 11th H.A. | U.S.C.T

Franklin Freeman

Appears with rank of Pvt on

Muster and Descriptive Roll of a Detachment of Drafted Men and Substitutes forwarded

(14. R. & H.A.)

for the 11 Reg't U. S. Col'd H.A. Roll dated

New Haven Conn, Oct 8, 1863

Where born Conn

Age 20 years; occupation Laborer

Drafted and mustered in:

When Aug 22, 1863.

Where New Haven Cot 2d Dist.

Period 3 years.

Eyes Black; hair Black

Complexion Black; height 5 ft. 6½ in.

Paid bounty and advance pay, $ 100

Bounty due $ 100

Where credited

Company to which assigned

Remarks:

Book mark:

Leger

(340) Copyist.

F | H, H.A. | **U.S.C.T**

Frederick Freeman

Appears with rank of Pvt on

Muster and Descriptive Roll of a Detachment of Drafted Men and Substitutes forwarded

Co K & H.A.

for the 11 Reg't U. S. Col'd H.A. Roll dated

New Haven Conn, Oct 8, 1863

Where born Conn

Age 21 years; occupation Farmer

Drafted and mustered in:

When Oct. 5, 1863.

Where Bridgeport Ct. 4 Dist

Period 3 years.

Eyes Black; hair Black

Complexion Black; height 5 ft. 6 1/2 in.

Paid bounty and advance pay, $ 100

Bounty due $ 100

Where credited

Company to which assigned

Remarks:

Book mark:

Leger

(340) Copyist.

F | 11 H. Art'y. | U.S.C.T.

Frederick Freeman

, Co. F, 11 Reg't U. S. Col'd H. Art'y.

Appears on

Company Descriptive Book

of the organization named above.

DESCRIPTION.

Age 21 years; height 5 feet 6½ inches.

Complexion Blk.

Eyes Blk; hair Blk.

Where born Wolcottville, Conn.

Occupation Farmer.

ENLISTMENT.

When Oct. 5, 1863.

Where Bridgeport, Connecticut.

By whom ; term 3 y'rs.

Remarks: Drafted 4th Dist. Conn.

O. J. Markle,

(383y) *Copyist.*

Freeman Frederick

_____, Co. _____, _____ Reg't U.S.C.T.

2 **Enclosures.**

Bed Cards	Final Statements
Burial Records	Furloughs or L. of A
Certs. of Dis. for Discharge	Med. Certificates
C. M. Charges	Med. Des. Lists
Descriptive Lists	Orders
Discharge Certificates	Pris. of War Record
Enlistment Papers 2	Resignations

Other papers relating to—

Admission to Hosp'l	Furlough or L. of A
Casualty Sheet	Med. Examination
Confinement	Misc. Information
Contracts	Pay or Clothing
Death or Effects	Personal Reports
Desertion	Rank
Discharge from Hosp'l	Transfer to Hosp'l
Discharge from Service	Transfer to V. R. C.
Duty	Transportation

DECLARATION OF SUBSTITUTE.

I, Frederick Freeman Colrd desiring to ENLIST in the **Army of the United States**, for THREE YEARS, ***Do declare,*** That I am Twenty one years and ..... months of age; that I have never been discharged from the United States service on account of disability or by sentence of a court martial; and I know of no impediment to my serving honestly and faithfully as a soldier for three years.

GIVEN at Bridgeport

the 5 day of October

WITNESS:

Richard B. Ames. Frederick his × Freeman mark

3 Reg't

No. 302

Frederick Freeman Colrd

Bridgeport

Enlisted at Bridgeport

As Substitute for

Henry A. Morris Colrd

On the 5 day of October, 1863.

By

Brig. Gen. D. N. Pr. Muhlenberg

Lieut. F. Tammerman

Maj. J. Ph. Act. Engr.

Board of Enrollment,

1st Dist. of Conn.

(No. 40.)

SUBSTITUTE

VOLUNTEER ENLISTMENT.

STATE OF Connecticut TOWN OF Bridgeport

I, Frederick Freeman born in the State of Conn, aged Twenty one years, and by occupation a Farmer DO HEREBY ACKNOWLEDGE to have agreed with Henry A. Harris, Esq., of Newtown Fairfield County Conn to become his **SUBSTITUTE** in the Military Service, for a sufficient consideration paid and delivered to me, on the Fifth day of October, 1863; and having thus agreed with said Henry A. Morris, I DO HEREBY ACKNOWLEDGE to have enlisted this Fifth day of October, 1863, to serve as a ***Soldier*** in the **Army of the United States of America,** for the period of *THREE YEARS*, unless sooner discharged by proper authority: I do also agree to accept such bounty, pay, rations, and clothing, as are, or may be, established by law for soldiers. And I do solemnly swear that I will bear true and faithful allegiance to the ***United States of America;*** that I will serve them honestly and faithfully against all their enemies or opposers whomsoever; and that I will observe and obey the orders of the President of the United States, and the orders of the Officers appointed over me, according to the Rules and Articles of War.

SWORN and subscribed to, at Bridgeport
this 5th day of October 1863.
BEFORE W H Riley
Provost Marshal

his
Frederick × Freeman
mark

We certify, on honor, That we have carefully examined the above-named Volunteer Substitute agreeably to the Regulations, and that, in our opinion, he is free from all bodily defects and mental infirmity which would in any way disqualify him from performing the duties of a soldier; that he was entirely sober when enlisted; that he is of lawful age, (not under 18 years;) and that, in accepting him as duly qualified to perform the duties of an able-bodied soldier, and as a Substitute in lieu of Henry A. Harris, drafted in Newtown Fairfield County Conn Aug 29, 1863, we have strictly observed the Regulations which govern in such cases. This soldier has Black eyes, Black hair, Black complexion; is 5 feet 6 1/2 inches high.

W H Riley
Provost Marshal.

G Ellsworth
Commissioner of Board.

James M Smith Asst Surg 2d Regt
Surgeon of Board.

Board of Enrollment of 4 *Dist. of* Conn.

DECLARATION OF SUBSTITUTE.

I, Frederick Freeman desiring to ENLIST in the **Army of the United States,** for THREE YEARS, ***Do declare,*** That I am Twenty one years and ..... months of age; that I have never been discharged from the United States service on account of disability or by sentence of a court martial; and I know of no impediment to my serving honestly and faithfully as a soldier **for three years.**

GIVEN at Bridgeport

the 5th day of October

WITNESS:

Richard B. Ames

his
Frederick × Freeman
mark

54/63

No. 3 C

Frederick Freeman Colored

Enlisted at Bridgeport

As Substitute for

Colored
Henry A. Morris

On the 7th day of October, 1863.

By

Brig. Gen. Pro. Mar. Regs.
Ellsworth T. Cunningham

Maj. J. A. Act Insp.
Board of Enrollment,
Dist. of Conn.

(No. 40.)

SUBSTITUTE

VOLUNTEER ENLISTMENT.

STATE OF Connecticut TOWN OF Bridgeport

I, Frederick Freeman Colrd born in the State of Connecticut, aged Twenty one years, and by occupation a Farmer Do HEREBY ACKNOWLEDGE to have agreed with Henry A. Morris Colrd, Esq., of Newtown Fairfield County Ct to become his **SUBSTITUTE** in the Military Service, for a sufficient consideration paid and delivered to me, on the Fifth day of October, 1863; and having thus agreed with said Henry A. Morris, I DO HEREBY ACKNOWLEDGE to have enlisted this Fifth day of October, 1863, to serve as a ***Soldier*** in the **Army of the United States of America,** for the period of *THREE YEARS*, unless sooner discharged by proper authority: I do also agree to accept such bounty, pay, rations, and clothing, as are, or may be, established by law for soldiers. And I do solemnly swear that I will bear true and faithful allegiance to the ***United States of America;*** that I will serve them honestly and faithfully against all their enemies or opposers whomsoever; and that I will observe and obey the orders of the President of the United States, and the orders of the Officers appointed over me, according to the Rules and Articles of War.

SWORN and subscribed to, at Bridgeport
this 5 day of October 1863.
BEFORE W H Riley
Provost Marshal

Frederick his × Freeman
mark

We certify, on honor, That we have carefully examined the above-named Volunteer Substitute agreeably to the Regulations, and that, in our opinion, he is free from all bodily defects and mental infirmity which would in any way disqualify him from performing the duties of a soldier; that he was entirely sober when enlisted; that he is of lawful age, (not under 18 years;) and that, in accepting him as duly qualified to perform the duties of an able-bodied soldier, and as a Substitute in lieu of Henry A. Morris, drafted in Newtown Fairfield County Conn August 29th, 1863, we have strictly observed the Regulations which govern in such cases. This soldier has Black eyes, Black hair, Black complexion; is 5 feet 6 1/2 inches high.

W H Riley
Provost Marshal.

H Ellsworth
Commissioner of Board.

[illegible] Surgeon's Asst.
Surgeon of Board.

Board of Enrollment of 4 *Dist. of* Conn.

Co. G, 1st U.S.Col'd H.Art'y

Private	Private

CARD NUMBERS.

1	6192511	26	
2	6192669	27	
3	6192815	28	
4	6192962	29	
5	6193101	30	
6	6193242	31	
7	6193377	32	
8	6193506	33	
9	6193634	34	
10	6193763	35	
11	6193894	36	
12	6194019	37	
13	6194147	38	
14	9125181	39	
15		40	
16		41	
17		42	
18		43	
19		44	
20		45	
21		46	
22		47	
23		48	
24		49	
25		50	

Book Mark:

See also

F | 11 H. Art'y. | U.S.C.T.

George O Freeman

....., Co. G, 11 Reg't U. S. Col'd H. Art'y.

Appears on

Company Descriptive Book

of the organization named above.

DESCRIPTION.

Age 21 years; height 5 feet 4 inches.

Complexion Dark.

Eyes Black; hair Black

Where born Auburn, New York.

Occupation Barber.

ENLISTMENT.

When Oct. 26, 1863.

Where Bror, R. I.

By whom J. C. Engley; term 3 y'rs.

Remarks: .....

O. L. Markle.

(383d) Copyist.

F. | 11 H. Art'y. | U.S.C.T.

George E. Freeman

Pvt., Co. G, 14 Reg't R. I. Col'd H. Art'y.*

Age 21 years.

Appears on

Company Muster-in Roll

of the organization named above. Roll dated Providence, R.I., Nov. 4, 1863.

Muster-in to date Nov. 4, 1863.

Joined for duty and enrolled:

When Oct. 26, 1863.

Where Prov. R. I.

Period 3 years.

Valuation of horse, $ 100

Valuation of horse equipments, $ 100

Remarks:

* This organization subsequently became Co. G, 11 Reg't U. S. Colored Heavy Artillery.

Book mark:

Ramsey

Copyist.

F. | 11 H. Art'y. | U.S.C.T.

George E. Freeman

Pvt, Co. G, 14 Reg't R. I. Col'd H. Art'y.*

Appears on

Company Muster Roll

for Nov 4 to Dec 31, 1863.

Present or absent Present.

Stoppage, $ 100 for

Due Gov't, $ 100 for

Valuation of horse, $ 100

Valuation of horse equipments, $ 100

Remarks:

* This organization subsequently became Co. G, 11 Reg't U. S. Colored Heavy Artillery.

Book mark:

Ramsey

Copyist.

F. | 11 H. Art'y. | U.S.C.T.

George E. Freeman

Pvt, Co. G, 14 Reg't R. I. Col'd H. Art'y.*

Appears on

Company Muster Roll

for Jan & Feb, 186 4.

Present or absent Present.

Stoppage, $ 100 for

Due Gov't, $ 100 for

Valuation of horse, $ 100

Valuation of horse equipments, $ 100

Remarks:

* This organization subsequently became Co. G, 11 Reg't U. S. Colored Heavy Artillery.

Book mark:

Ramsey

(358) Copyist.

F. | 11 H. Art'y. | U.S.C.T.

George E. Freeman

Pvt., Co. G, 14 Reg't R. I. Col'd H. Art'y.*

Appears on

Company Muster Roll

for Mar & Apr, 1864

Present or absent Present.

Stoppage, $ 100 for

Due Gov't, $ 100 for

Valuation of horse, $ 100

Valuation of horse equipments, $ 100

Remarks:

* This organization subsequently became Co. G, 11 Reg't U. S. Colored Heavy Artillery.

Book mark:

Ramsay

(358) Copyist.

F. | 11 H. Art'y. | U.S.C.T.

George E. Freeman

Pvt., Co. G, 8 Reg't U. S. Col'd H. Art'y.*

Appears on

Company Muster Roll

for May & June, 1864.

Present or absent Present.

Stoppage, $ 100 for

Due Gov't, $ 100 for

Valuation of horse, $ 100

Valuation of horse equipments, $ 100

Remarks: Stop for one letter.

† This organization subsequently became Co. G, 11 Reg't U. S. Colored Heavy Artillery.

Book mark:

Ramsey

Copyist.

F. | 11 H. Art'y. | U.S.C.T.

George E. Freeman.

Priv., Co. G, 11 Reg't U. S. Col'd H. Art'y.

Appears on

Company Muster Roll

for July & Aug., 1864.

Present or absent Present.

Stoppage, $ 100 for

Due Gov't, $ 100 for

Valuation of horse, $ 100

Valuation of horse equipments, $ 100

Remarks: Stop for 1 letter .01

Book mark:

Sitter.

(358) Copyist.

F. | **11 H. Art'y.** | **U.S.C.T.**

George E. Freeman.

Priv., Co. G, 11 Reg't U. S. Col'd H. Art'y.

Appears on

Company Muster Roll

for Sept & Oct, 1864.

Present or absent Present.

Stoppage, $ 100 for

Due Gov't, $ 100 for

Valuation of horse, $ 100

Valuation of horse equipments, $ 100

Remarks: Free Apr. 19, '61.
Wash for 1 mr.
Scales .50 2 letters
.02 1 Cross cam .02

Book mark:

Sutler.

(358) *Copyist.*

F. | **11 H. Art'y.** | **U.S.C.T.**

George E. Freeman.

Pvt., Co. G, 11 Reg't U. S. Col'd H. Art'y.

Appears on

Company Muster Roll

for Nov. & Dec., 1864.

Present or absent Present.

Stoppage, $ 100 for

Due Gov't, $ 100 for

Valuation of horse, $ 100

Valuation of horse equipments, $ 100

Remarks: Stop for 2 prs. scales $1.00 2 Letters .02 1 Cross Cav. .02 1 Haversack .67

Book mark:

Sitler.

(358) *Copyist.*

F. | **11 H. Art'y.** | **U.S.C.T.**

George C. Freeman.

Priv., Co. G, 11 Reg't U. S. Col'd H. Art'y.

Appears on

Company Muster Roll

for Jan. & Feb., 1865.

Present or absent Present.

Stoppage, $ 100 for

Due Gov't, $ 100 for

Valuation of horse, $ 100

Valuation of horse equipments, $ 100

Remarks: Stop for 2 prs. scales $1.00 1 Belt .01 1 Cross Cam. .02 1 Hav. .67 1 Knapsack $2.13-

Book mark:

Siter.

(358) *Copyist.*

F. | 11 H. Art'y. | U.S.C.T.

George E. Freeman.

Priv., Co. G, 11 Reg't U. S. Col'd H. Art'y.

Appears on

Company Muster Roll

for Mar. & Apr., 1865.

Present or absent Present.

Stoppage, $ 100 for

Due Gov't, $ 100 for

Valuation of horse, $ 100

Valuation of horse equipments, $ 100

Remarks: Stop for 2 Inst.
Scales $1.00 1 Let. .01
1 C. Can .02 1 Hat .67
1 Knap $2.15

Book mark:

Sitter.

Copyist.

J | 11 H. Art'y. | U.S.C.T.

George E Freeman

Pvt., Co. G, 11 Reg't U. S. Col'd H. Art'y.

Appears on

Company Muster Roll

for May & June, 186 5.

Present or absent Present

Stoppage, $ ---- 100 for ----

Due Gov't, $ ---- 100 for ----

Valuation of horse, $ ---- 100

Valuation of horse equipments, $ ---- 100

Remarks: Ll

Book mark: ----

Laurence

(358) Copyist.

I | 11 H. Art'y. | U.S.C.T.

George E Freeman

Pvt., Co. G, 11 Reg't U. S. Col'd H. Art'y.

Appears on

Company Muster Roll

for Dated Aug 31, 1865.

Present or absent Present

Stoppage, $ 100 for

Due Gov't, $ 100 for

Valuation of horse, $ 100

Valuation of horse equipments, $ 100

Remarks:

Book mark:

Lawrence

(358) Copyist.

J. | 11 H. Art'y. | U.S.C.T.

George E Freeman

Pvt., Co. G, 11 Reg't U. S. Col'd H. Art'y.

Appears on **Co. Muster-out Roll,** dated New Orleans La Oct 2, 1865.

Muster-out to date Oct 2, 1865.

Last paid to June 30, 1865.

Clothing account:

Last settled ....., 186 ; drawn since $ 100

Due soldier $ ..... 100 ; due U. S. $ 49/100

Am't for cloth'g in kind or money adv'd $ 100

Due U. S. for arms, equipments, &c., $ 36/100

Bounty paid $ ..... 100 ; due $ 100 100

Remarks: Joined at Org Organ
Absent sick / Serves Driver
corps / Shoe bone

Book mark: .....

Freeman

(861) *Copyist.*

Freeman George E

P, Co. , 11 Reg't Mass Inf.

1 **Enclosures.**

Bed Cards	Final Statements
Burial Records	Furloughs or L. of A.
Certs. of Dis. for Discharge	Med. Certificates
C. M. Charges	Med. Des. Lists
Descriptive Lists	Orders
Discharge Certificates	Pris. of War Record
Enlistment Papers 1	Resignations

Other papers relating to—

Admission to Hosp'l	Furlough or L. of A.
Casualty Sheet	Med. Examination
Confinement	Misc. Information
Contracts	Pay or Clothing
Death or Effects	Personal Reports
Desertion	Rank
Discharge from Hosp'l	Transfer to Hosp'l
Discharge from Service	Transfer to V. R. C.
Duty	Transportation

DECLARATION OF RECRUIT.

I, George E Freeman desiring to VOLUNTEER as a Soldier in the *ARMY OF THE UNITED STATES*, for the term of three years do declare that I am 21 years and months of age; that I have never been discharged from the United States service on account of disability or by sentence of a court martial, or by order, before the expiration of a term of enlistment; and I know of no impediment to my serving honestly and faithfully as a soldier for three years

Given at Portland Me

The 26th day of October 1863

Witness:
R. D. Sears

George E Freeman

Enlisted 11 Nov 1863

No. 45

George E Freeman

Volunteered at Portland Me Oct 26 1863

To serve Three years

By .....

14th Regiment of Me Vol Infty

.....

enlistment; last served in Company ( )

Reg't of ( )

Discharged 18

ADJUTANT GENERAL'S OFFICE RECEIVED
DEC 11 1871

CONSENT IN CASE OF MINOR.

I, Do CERTIFY that I am the of ; that the said is years of age; and I do hereby freely give my CONSENT to his volunteering as a SOLDIER in the ARMY OF THE UNITED STATES for the period of

Given at

The day of

Witness:

VOLUNTEER ENLISTMENT.

State of Rhode Island Town of Woodlawn

I, George E Freeman born in Auburn

in the State of New York aged 21 years, and by occupation a Worker

DO HEREBY ACKNOWLEDGE to have volunteered this day of October 1863 to serve as a SOLDIER in the ARMY OF THE UNITED STATES OF AMERICA, for the period of three years, unless sooner discharged by proper authority: Do also agree to accept such bounty, pay, rations and clothing, as are, or may be, established, by law for volunteers. And I, George E Freeman do solemnly swear, that I will bear true faith and allegiance to the *United States of America*, and that I will serve them honestly and faithfully against all their enemies or opposers whomsoever; and that I will observe and obey the orders of the President of the United States, and the orders of the officers appointed over me, according to the Rules and Articles of War.

Sworn and Subscribed to, at Prov. R.I.

this 26th day of October 1863. } George E Freeman

BEFORE E R Chelson Justice of the Peace

I CERTIFY, ON HONOR, That I have carefully examined the above-named Volunteer, agreeable to the General Regulations of the Army, and that, in my opinion, he is free from all bodily defects and mental infirmity, which would, in any way, disqualify him from performing the duties of a soldier.

EXAMINING SURGEON.

I CERTIFY, ON HONOR, That I have minutely inspected the Volunteer, George E Freeman previously to his enlistment, and that he was entirely sober when enlisted; that to the best of my judgment and belief, he is of lawful age; and that, in accepting him as duly qualified to perform the duties of an able-bodied soldier, I have strictly observed the Regulations which govern the recruiting service. This soldier has black *eyes* black *hair*, dark *complexion*, is five *feet*, 9 *inches high*.

J C Engley Major

14th *Regiment of* Hy. Arty *Volunteers*,

RECRUITING OFFICER.

Co. F, 11 U.S.Col'd H.Art'y.

Private	Private

CARD NUMBERS.

1	6190737	26	
2	6190884	27	
3	6191031	28	
4	6191175	29	
5	6191319	30	
6	6191463	31	
7	6191598	32	
8	6191728	33	
9	6191850	34	
10	6191973	35	
11	6192105	36	
12	6192234	37	
13	6192468	38	
14	9125037	39	
15		40	
16		41	
17		42	
18		43	
19		44	
20		45	
21		46	
22		47	
23		48	
24		49	
25		50	

Book Mark:

See also

F. | 11 H. Art'y. | U.S.C.T.

George F. N. Freeman

, Co. F, 11 Reg't U. S. Col'd H. Art'y.

Appears on

Company Descriptive Book

of the organization named above.

DESCRIPTION.

Age 20 years; height 5 feet 6 3/8 inches.

Complexion Dark.

Eyes Dark.; hair Black.

Where born Woodbury, Conn.

Occupation Laborer.

ENLISTMENT.

When Aug. 22, 1863.

Where New Haven, Connecticut.

By whom ; term 3 y'rs.

Remarks: Drafted. 2d Dist. Conn.
Found guilty before a Garrison
Court Martial convened Dec. 1,
1864 of "absence without leave",
Deserted at Donaldsonville, La.
Aug. 30, 1865. Is an inveterate
thief. Has a bold independent
manner of talking, a voice pitched
in a high key, and a somewhat

[Over]

O. J. Markle,

(3830) Copyist.

MAY. 14 1891
9125037

jaunty air. He can write a good hand. He was frequently under punishment in the Company.

F | 11 H. Art'y. | U.S.C.T.

George H. Freeman

Pvt., Co. F, 14 Reg't R. I. Col'd H. Art'y.*

Age 20 years.

Appears on

Company Muster-in Roll

of the organization named above. Roll dated Providence R.I. Oct 20, 1863.

Muster-in to date Oct 20, 1863.

Joined for duty and enrolled:

When Oct 5, 186 3.

Where Bridgeport, Ct.

Period 3 years.

Valuation of horse, $ 100

Valuation of horse equipments, $ 100

Remarks Mustered Out with Co. at Bridgeport, Ct. Oct 2d 1865.

---

* This organization subsequently became Co. F, 11 Reg't U. S. Colored Heavy Artillery.

Book mark:

---

(356)

Copyist.

F | 11 H. Art'y. | U.S.C.T.

George F. N. Freeman

Pvt, Co. F, 14 Reg't R. I. Col'd H. Art'y.*

Appears on

Company Muster Roll

for Oct 20 to Dec 31, 1863.

Present or absent Present

Stoppage, $ 100 for

Due Gov't, $ 100 for

Valuation of horse, $ 100

Valuation of horse equipments, $ 100

Remarks: Drafted 20 Dist Columbia.

* This organization subsequently became Co. F. 11 Reg't U. S. Colored Heavy Artillery.

Book mark:

L Neal

(358) *Copyist.*

F | 11 H. Art'y. | U.S.C.T.

George H. Freeman

Pri, Co. F, 14 Reg't R. I. Col'd H. Art'y.*

Appears on

Company Muster Roll

for Jan & Feb, 1864

Present or absent Present

Stoppage, $ 100 for

Due Gov't, $ 100 for

Valuation of horse, $ 100

Valuation of horse equipments, $ 100

Remarks:

* This organization subsequently became Co. F. 11 Reg't U. S. Colored Heavy Artillery.

Book mark:

L Neal

(358) *Copyist.*

F | 11 H. Art'y. | U.S.C.T.

George F. M. Freeman

Pvt., Co. F, 14 Reg't R. I. Col'd H. Art'y.*

Appears on

Company Muster Roll

for May & June, 1864

Present or absent Present

Stoppage, $ ---- 100 for ----

Due Gov't, $ ---- 100 for ----

Valuation of horse, $ ---- 100

Valuation of horse equipments, $ ---- 100

Remarks: ----

* This organization subsequently became Co. F. 11 Reg't U. S. Colored Heavy Artillery.

Book mark: ----

L Neal

(358) *Copyist.*

F | 11 H. Art'y. | U.S.C.T.

George F. Freeman

Pri., Co. F, 8 Reg't U. S. Col'd H. Art'y.*

Appears on

Company Muster Roll

for May & June, 1864

Present or absent Present

Stoppage, $ 100 for

Due Gov't, $ 100 for

Valuation of horse, $ 100

Valuation of horse equipments, $ 100

Remarks: Stop for one rifle cut & Spare Case.

† This organization subsequently became Co. F, 11 Reg't U. S. Colored Heavy Artillery.

Book mark:

A Neal

(358) *Copyist.*

F | 11 H. Art'y. | U.S.C.T.

George F. N. Freeman.

Pvt., Co. F, 11 Reg't U. S. Col'd H. Art'y.

Appears on

Company Muster Roll

for July and Aug., 1864.

Present or absent Present.

Stoppage, $ 100 for

Due Gov't, $ 100 for

Valuation of horse, $ 100

Valuation of horse equipments, $ 100

Remarks: Stop for C. B. Plate 1.00
1 spur 20 1 curry 12 1 pr. S. Scales 50
Recd April 12/64.

Book mark:

Enlisted.

(358) Copyist.

5f	11 H. Art'y.	U.S.C.T.

George F. N. Freeman.
Pvt., Co. F, 11 Reg't U. S. Col'd H. Art'y.

Appears on

Company Muster Roll

for Sept. and Oct., 1864.

Present or absent Present.

Stoppage, $ 100 for

Due Gov't, $ 100 for

Valuation of horse, $ 100

Valuation of horse equipments, $ 100

Remarks: Stop for Cartridge Box Plate. 07 wipes. 20 S. cone. 12 pr. Shoulder scales. 50, Opened April 19/64.

Book mark:

Enlisted.

Copyist.

F | 11 H. Art'y. | U.S.C.T.

George F. N. Freeman.

Pvt., Co. F, 11 Reg't U. S. Col'd H. Art'y.

Appears on

Company Muster Roll

for Nov. and Dec., 1864.

Present or absent Present.

Stoppage, $ 100 for

Due Gov't, $ 100 for

Valuation of horse, $ 100

Valuation of horse equipments, $ 100

Remarks: Stop for mitten .20
S. Com. 12 C. B. Plate. 07
pr. S. scales .50 haversack .49
canteen .41, Stop one months
pay Sentence of G. C. M.
of Plaquemine La., Dec. 23/64.
Free April 19/61.

Book mark:

Exline.

(358) Copyist.

F | 11 H. Art'y. | U.S.C.T.

George F. N. Freeman.

Pvt., Co. F, 11 Reg't U. S. Col'd H. Art'y.

Appears on

Company Muster Roll

for Jan. and Feb., 1865.

Present or absent Present.

Stoppage, $ 100 for

Due Gov't, $ 100 for

Valuation of horse, $ 100

Valuation of horse equipments, $ 100

Remarks: Stop for haversack. 49 canteen. 41 Stop one month's pay per sentence of G. C. M. of Plaquemine, La. Dec. 23, 1864.

Book mark:

Erline.

(358) *Copyist.*

F | 11 H. Art'y. | U.S.C.T.

George F. N. Freeman.

Pvt., Co. F, 11 Reg't U. S. Col'd H. Art'y.

Appears on

Company Muster Roll

for Mar. and Apr., 1865.

Present or absent Present.

Stoppage, $ 100 for

Due Gov't, $ 100 for

Valuation of horse, $ 100

Valuation of horse equipments, $ 100

Remarks: Stoppage one month's pay per sentence of G. C. M. rear sight of gun .22 mosquito bar .70 wiper .20 haversack .49 canteen .41

Book mark:

Exline.

(358) *Copyist.*

F | 11 H. Art'y. | U.S.C.T.

George F. H. Freeman

Bk., Co. F, 11 Reg't U. S. Col'd H. Art'y.

Appears on

Company Muster Roll

for May & June, 1865.

Present or absent Present.

Stoppage, $ 100 for

Due Gov't, $ 100 for

Valuation of horse, $ 100

Valuation of horse equipments, $ 100

Remarks: Stop. for rear sight of gun, .22.
Stop. for cutlass belt 20 cts.
Mus. Bar $1,70

Book mark:

(358)

Leib
Copyist.

F | 11 H. Art'y. | U.S.C.T.

George F. T. Freeman

Sgt., Co. F, 11 Reg't U. S. Col'd H. Art'y.

Appears on

Company Muster Roll

for July & Aug., 1865.

Present or absent Absent

Stoppage, $ ---- 100 for ----

Due Gov't, $ ---- 100 for ----

Valuation of horse, $ ---- 100

Valuation of horse equipments, $ ---- 100

Remarks: Absent without leave since Aug. 3d,

Book mark: ----

Copyist.

F | 11 H. Art'y. | U.S.C.T.

George F. N. Freeman

Bt. 2d Lt., Co. F, 11 Reg't U. S. Col'd H. Art'y.

Appears on **Co. Muster-out Roll,** dated New Orleans, La. Oct 7, 1865.

Muster-out to date ....., 186 .

Last paid to June 30, 1865

Clothing account:

Last settled....., 186 ; drawn since $.....100

Due soldier $.....100; due U. S. $ 21, 79/100

Am't for cloth'g in kind or money adv'd $.....100

Due U. S. for arms, equipments, &c., $ 22, 38/100

Bounty paid $ None 100; due $ None 100

Remarks: Joined at Brashear City, Deserted at Donaldsonville, La. Aug. 30/65. Stop for Knapsack, Haversack & Accts. Complete Gun Sling, Knapsack, Haversack

Book mark: .....

---

(361) (Over) Copyist.

JAN.15 6192468 C1 1891☆

+ Canteen Cook.

Freeman Geo. F. Jr.

P, Co. F, 11 Regt U.S.C.E.A.

3 Enclosures.

Bed Cards	Descriptive Lists
Burial Records	Final Statements
Certs. of Dis. for Discharge	Furloughs
C. M. Charges 2	Med. Des. Lists
Med. Certificates	Orders

Other papers relating to—

Admission to Hosp'l	Furlough
Casualty Sheet (Officer's)	Med. Examination
Confinement	Misc. Information)
Contracts	Pay or Clothing
Death or Effects	Personal Reports
Desertions	Rank
Discharge from Hosp'l	Transfer to Hosp'l
Discharge from Service	Transfer to V. R. C.
Duty	Transportation

No 7

Proceedings
of a Garrison Court-Martial
in case of
Private Geo. F. V. Freeman
Co. F. 11th U.S.C.A. (Ky)

Plaquemine La.
December 20th 1864.

Proceedings of a Garrison Court Martial which convened at Plaquemine La. by virtue of the following Special order. —

Head Quarters Post of Plaquemine
Plaquemine La. Nov. 30th 1864

Special Orders
No 134.

Extract.

1. A Garrison Court Martial to consist of the following named officers. —
Captain Charles C. Cragin 11th Regt. U.S.C.A (Heavy)
1st. Lieut. William H. Pellon 3/st.. Asst. C.S. (Transmitted)
2nd. " William H. Cherry 11th " U.S.C.A (Heavy)
is hereby ordered to convene tomorrow December 1st. at 10 o'clock A.M. for the trial of such prisoners as may be brought before it. —

By Order of Major J. G. Shaw
Comdg Post.
(2) Henry Warner
1st. Lieut. & Post Adjt.

Head Quarters Post of Plaquemine
Plaquemine La Dec. 15th 1864

Special Orders
No. 140.

Extract.

1. 2d. Lieutenant William H. Cherry 11th United States Colored Artillery (Hy.) is hereby detailed as a member of the Garrison

Court-Martial convened by Special Orders
No. 134. Ex. 1. current series from these Head-
=quarters in place of Bt. Lieut. William
=H. Pelton 3rd Lt. Rdg Vols. ordered to New
Orleans —

By Order of Major J. G. Shaw
Comdg Post.
(Sd) Henry Barney
1st Lieut Reg A.A.A.G. Gen —

Plaquemine La
December 20th 1864

The court met pursuant to the
foregoing order. —

Present.

Capt. Charles C. Cragin 11th Regt. U.S.C.A (Heavy
1st Lieut. William H Cheney 11th " U.S.C.A. (Heavy
2nd Lieut. William H. Curtis 11th " U.S.C.A. (Heavy

The court then proceeded to the trial
of Private George F. N. Freeman Co.
F. 11th U.S.C.A (Hy) who was brought
before the court, and having heard the
order appointing the court read - was
asked if he had any objection to
any member named therein.
Which question he replied. "No Sir."

The court was then in his presence duly
sworn. —

The accused Private George

F. V. Freeman Cr. F. 11th. U.S.C.A. (4)
was arraigned and tried on the following
Charge and Specification.—

Charge.— "Absence without leave."

Specification.— In this that he
Private George F. V. Freeman Cr. F. 11th.
U.S.C.A. (4) was absent from his
Company and Camp without permission
from the proper authority. between the
hours of 6 and 8. o'clock on the night
of the 15th. December 1864.
This at Camp Sturm Plaquemine La.

To which Charge and Specification
he accused pleaded as follows.—
To the Specification Guilty
To the Charge Guilty

The accused was then asked if he
had any remarks to make. to which
question he replied in the negative.

The court was then cleared and
after mature deliberations. find the
accused Private George F. V. Freeman
Cr. F. 11th U.S.C.A (4) as follows.—
Of the Specification Guilty
Of the Charge Guilty

And the court do therefore sentence
him Private George F. V. Freeman Cr. F.

11th U.S.C.A (Ky) to be deprived of one months pay. and put at hard labor on the Fort at Plaquemine La. or such other place as the Commanding Officer may direct for the period of thirty (30) days.

Charles A. League
Capt. 11th U.S.C.A (Ky)
President.

William H. Currie
2nd Lieut 11th U.S.C.A (Ky)
Recorder.

There being no further business before the Court it adjourned sine die.

William H Currie
2nd Lt. 11th U.S.C.A (Ky)
Recorder

Charles A League
Capt. 11th U.S.C.A (Ky)
President

Mr. Ethelbert

Grace J. d. Sumeau

Summit Ky

Adjutant General's Office,

COLORED TROOPS BRANCH,

June 24th, 1875.

Ms. Ellis Lock Vol. C. T., 187

Wanted in case of Geo. F. M. Freeman, Co. "G",

11th Reg't U.S. Col'd Inf'y Hy

Co. of 96 M

Muster Roll for Jan. & Dec. 64 shows Deserted from Camp Parapet Jan. 6th 64 remains Dropped from Rolls of 96 M of Pleasants Co. Dec. 23/64 "

Respectfully,

R. A. Woodward

Chief Clerk.

per H. H.

Adjutant General's Office,

Div. of Distrd Commands,

July 1st, 1875

Vol. C. T., 187

Reply in case of George F. M. Freeman Pvt., Co. F,

11th Reg't U.S.C. Inf. (Hy)

Hdqrs Post of Plaquemine, Plaquemine, La. Dec. 23/64

General Orders No. 23 - Par. 2 - Charge:- "Absence without leave," - Finding: "Guilty"

Sentence: "To be deprived of one month's pay and put at hard labor on the Fort at Plaquemine, La., or such other place as the Commanding Officer may direct, for the period of thirty (30) days."

C.A.G. "Approved" By Order of Major R. G. Shaw

Commdg Post

Morning Reports, Co. "F" date Janry 23/65 report:- "George F. M. Freeman from arrest to duty, sentence of C. M. in his case having expired."

Duplicate of Charges &
Specifications preferred
against Private George F.
N. Freeman, Co. F. 2d Batt. 14
R. I. H. A. by 2d Lieut. John
Reynolds, Co. F. 2d Batt. 14
R. I. H. A.

Original approved & forwarded

11 U. S. C. H. A.

Department of the Gulf.
Camp Kenyon, English Turn, La.
March 9th, 1864.

Charges and Specifications preferred against [redacted] George F. N. Freeman Co. [redacted]
14th R. I. H. Artly.

Charge 1st.— Conduct prejudicial to good order and military discipline.

Specification.— In this, that the said Private George F. N. Freeman, Co. F. 2d Batt. 14th R. I. H. Artly, did on the afternoon of the 6th of March, 1864, beat and otherwise maltreat Private Frederick Freeman, Co. F. 2d Batt. 14th R. I. H. Artly accompanying the same with abusive language.

This at Camp Kenyon, English Turn, La, on the afternoon of March 6th, 1864.

Witnesses.— Corpl. John H. Jackson, Co. F. 14th R. I. H. A.
Private Joseph B. Hall, Co. F. 14th R. I. H. A.

Charge 2d.— "Disrespect to his superior Officer."

Specification.— In this, that said Private George F. N. Freeman, Co. F. 2d [redacted] R. I. H. Artly, when ordered by his superior Officer, 2d Lieut. John A. Reynolds, Co. F. 2d Batt. 14th R. I. H. Artly, to retire to the guard-house under arrest, did reply to the said 2d Lieut. John A. Reynolds, Co. F. 2d Batt. 14th R. I. H. A. in a disrespectful manner, in words

and figures to wit: "I dont care for any God= damned white man," or words to that effect.

This at Camp Kenyon, English Turn, La, on the afternoon of the 6th of March, 1864.

[redacted]

Witnesses:-

2d Lieut. I. W. Coggeshall, Co. H. 14th R.I.H.A.
1st Sergt. Geo. D. Kelly, Co. E. 14th R.I.H. Arty
Sergt. Thos. J. Leonard, Co. E. 14th R.I.H. Arty

(Signed.) John A. Reynolds.
2d Lieut. Co. E. 14th R.I.H. Arty.
Officer preferring Charge.

[redacted]

_____, H U.S.Col'd H.Art'y.

Parade	Parade

CARD NUMBERS.

1	6181479	26	
2	6181491	27	
3	6185552	28	
4	6185702	29	
5	6185854	30	
6	6185964	31	
7	6186101	32	
8	6186268	33	
9	6186394	34	
10	6186514	35	
11	6186625	36	
12	6186732	37	
13	6186846	38	
14	6186958	39	
15	6187068	40	
16	9124407	41	
17		42	
18		43	
19		44	
20		45	
21		46	
22		47	
23		48	
24		49	
25		50	

Book Mark:

See also

I | 11 H. Art'y. | U.S.C.T.

George H Freeman

, Co. C, 11 Reg't U. S. Col'd H. Art'y.

Appears on

Company Descriptive Book

of the organization named above.

DESCRIPTION.

Age 29 years; height 5 feet 5 inches.

Complexion Blk

Eyes Dk; hair Blk

Where born Windham Co Conn

Occupation Farmer

ENLISTMENT.

When July 28, 1863.

Where Norwich

By whom Duffie; term 3 y'rs.

Remarks: 3d Norwich Conn.

James

F | 11th L.A. | **U.S.C.T**

George W. Freeman

Appears with rank of Pvt on

Muster and Descriptive Roll of a Detachment of Drafted Men and Substitutes forwarded

for the 11 Reg't U. S. Col'd H. A. Roll dated

New Haven Conn, Sept 3, 1863

Where born Conn

Age 29 years; occupation Farmer

Drafted and mustered in:

When July 28, 1863.

Where Norwich Conn. 3rd Dist.

Period 3 years.

Eyes Dark; hair Blk

Complexion Col'd; height 5 ft. 5 in.

Paid bounty and advance pay, $100

Bounty due $100

Where credited

Company to which assigned

Remarks:

Book mark:

Leger

Copyist.

F 11th H. A. | U.S.C.T

George W. Freeman

Appears with rank of Pvt on

Muster and Descriptive Roll of a Detachment of Drafted Men and Substitutes forwarded

for the 11 Reg't U. S. Col'd H. A. Roll dated New Haven Conn Sept 4, 1863

Where born Conn

Age 21 years; occupation Farmer

Drafted and mustered in:

When July 28, 1863.

Where Norwich Ct. 3 Dist

Period 3 years.

Eyes Blk; hair Blk

Complexion Col'd; height 5 ft. 5 in.

Paid bounty and advance pay, $ 100

Bounty due $ 100

Where credited

Company to which assigned

Remarks:

Book mark:

Logan

(340) Copyist.

H | 11 H. Art'y. | U.S.C.T.

George W. Freeman

Priv., Co. C, 14 Reg't R. I. Col'd H. Art'y.*

Age 29 years.

Appears on

Company Muster-in Roll

of the organization named above. Roll dated Providence R. I., Sept. 14, 1863.

Muster-in to date Sept. 14, 1863.

Joined for duty and enrolled:

When Aug 28th, 1863.

Where Providence R. I.

Period 3 years.

Valuation of horse, $ 100

Valuation of horse equipments, $ 100

Remarks: Drafted from 3d Dist. Conn.

* This organization subsequently became Co. C, 11 Reg't U. S. Colored Heavy Artillery.

Book mark:

Valentine

(356) Copyist.

H | 11 H. Art'y. | U.S.C.T.

George W. Freeman

Priv., Co. C, 14 Reg't R. I. Col'd H. Art'y.*

Appears on

Company Muster Roll

for Sept. 14 to Dec. 31, 1863.

Present or absent Present.

Stoppage, $ 100 for

Due Gov't, $ 100 for

Valuation of horse, $ 100

Valuation of horse equipments, $ 100

Remarks:

*This organization subsequently became Co. C, 11 Reg't U. S. Colored Heavy Artillery.

Book mark:

Valentine

Copyist.

F | 11 H. Art'y. | U.S.C.T.

George N. Truman

Priv., Co. C, 14 Reg't R. I. Col'd H. Art'y.*

Appears on

Company Muster Roll

for Jan. & Feb., 1864.

Present or absent Present.

Stoppage, $ 100 for

Due Gov't, $ 100 for

Valuation of horse, $ 100

Valuation of horse equipments, $ 100

Remarks:

*This organization subsequently became Co. C, 11 Reg't U. S. Colored Heavy Artillery.

Book mark:

Valentine

F | 11 H. Art'y. | U.S.C.T.

George W. Truman

Corp., Co. C, 8 Reg't U. S. Col'd H. Art'y.*

Appears on

Company Muster Roll

for March & Apr, 1864.

Present or absent Present.

Stoppage, $ 100 for

Due Gov't, $ 100 for

Valuation of horse, $ 100

Valuation of horse equipments, $ 100

Remarks: Appointed Apr 24th 1864. Stop for C. & G. Equipage 56¢

*This organization subsequently became Co. C., 11 Reg't U. S. Colored Heavy Artillery.

Book mark:

Valentine

F | 11 H. Art'y. | U.S.C.T.

George M. Truman

Corp, Co. C, 8 Reg't U. S. Col'd H. Art'y.*

Appears on

Company Muster Roll

for May & June, 1864.

Present or absent Present,

Stoppage, $ 100 for

Due Gov't, $ 100 for

Valuation of horse, $ 100

Valuation of horse equipments, $ 100

Remarks:

Stop for C. & G. Equipage

56¢

* This organization subsequently became Co. L, 11 Reg't U. S. Colored Heavy Artillery.

Book mark:

Valentine

Copyist.

7 | 11 H. Art'y. | U.S.C.T.

George N Freeman

Pvt, Co. C, 11 Reg't U. S. Col'd H. Art'y.

Appears on

Company Muster Roll

for July & Aug, 1864.

Present or absent Present

Stoppage, $ 100 for

Due Gov't, $ 100 for

Valuation of horse, $ 100

Valuation of horse equipments, $ 100

Remarks: Transferred from
Co. E 5th U.S. Heavy
Apl 1, 1864

Book mark:

(358) Copyist.

F | 11 H. Art'y. | U.S.C.T.

George W Freeman

Pvt, Co. C, 11 Reg't U. S. Col'd H. Art'y.

Appears on

Company Muster Roll

for Sept & Oct, 1864.

Present or absent Present

Stoppage, $ 100 for

Due Gov't, $ 100 for

Valuation of horse, $ 100

Valuation of horse equipments, $ 100

Remarks:

Book mark:

Copyist.

11 H. Art'y. | U.S.C.T.

George W Freeman

Pvt, Co. C, 11 Reg't U. S. Col'd H. Art'y.

Appears on

Company Muster Roll

for Nov & Dec, 1864.

Present or absent Present

Stoppage, $ 45/100 for Ordnance

Due Gov't, $ 100 for

Valuation of horse, $ 100

Valuation of horse equipments, $ 100

Remarks:

Book mark:

Copyist.

F | 11 H. Art'y. | U.S.C.T.

George W Freeman

Pvt., Co. C, 11 Reg't U. S. Col'd H. Art'y.

Appears on

Company Muster Roll

for Jan & Feb, 1865.

Present or absent Present

Stoppage, $ 75/100 for Ordnance

Due Gov't, $ 100 for

Valuation of horse, $ 100

Valuation of horse equipments, $ 100

Remarks:

Book mark:

I. | 11 H. Art'y. | **U.S.C.T.**

George W Freeman

Pvt, Co. C, 11 Reg't U. S. Col'd H. Art'y.

Appears on

Company Muster Roll

for Mch & Apl, 1865.

Present or absent Present

Stoppage, $ 45/100 for Ordnance

Due Gov't, $ 100 for

Valuation of horse, $ 100

Valuation of horse equipments, $ 100

Remarks:

Book mark:

(358) Copyist.

F | 11 H. Art'y. | U.S.C.T.

George W. Freeman

Pvt, Co. C, 11 Reg't U. S. Col'd H. Art'y.

Appears on

Company Muster Roll

for May and June, 186 5.

Present or absent Present

Stoppage, $ 100 for

Due Gov't, $ 100 for

Valuation of horse, $ 100

Valuation of horse equipments, $ 100

Remarks:

Book mark:

Bliss

Copyist.

F | 11 H. Art'y. | U.S.C.T.

George W. Freeman

Pvt, Co. C, 11 Reg't U. S. Col'd H. Art'y.

Appears on

Company Muster Roll

for July and Aug., 186 5.

Present or absent Present

Stoppage, $ 1 75/100 for Clothing &c.

Due Gov't, $ 100 for

Valuation of horse, $ 100

Valuation of horse equipments, $ 100

Remarks:

Book mark:

Blissr

(358) *Copyist.*

F | 11 H. Art'y. | U.S.C.T.

George W. Freeman

Pvt., Co. C, 11 Reg't U. S. Col'd H. Art'y.

Appears on **Co. Muster-out Roll,** dated New Orleans La, Oct. 2, 1865.

Muster-out to date Oct. 2, 1865.

Last paid to Feby 28, 1865.

Clothing account:

Last settled ....., 186 ; drawn since $ 100

Due soldier $ ..... 100 ; due U. S. $ 32 75/100

Am't for cloth'g in kind or money adv'd $ 100

Due U. S. for arms, equipments, &c., $ 100

Bounty paid $ ..... 100 ; due $ 100 00/100

Remarks: Joined Org. Arty. Stop for Cav & Eq Equipage Articles unknown 1.75

Book mark: 823. 1878

Bliss

(861) *Copyist.*

Co. E, 11 U.S. Inf.

Private	Corporal

CARD NUMBERS.

1	6181480	26	
2	6181492	27	
3	6185553	28	
4	6185608	29	
5	6185818	30	
6	6185962	31	
7	6186098	32	
8	6186233	33	
9	6186361	34	
10	6186482	35	
11	6186595	36	
12	6186701	37	
13	6186813	38	
14	6186924	39	
15	6187034	40	
16	91244408	41	
17	5329-a-177	42	
18		43	
19		44	
20		45	
21		46	
22		47	
23		48	
24		49	
25		50	

Book Mark: 5329-a-177

See also

S. 75-0848 P.O. '70
S. 137 4431. P.O. Mtn

J. D. Mary
64

7 | 11 H. Art'y. | U.S.C.T.

Giles Freeman

....., Co. C, 11 Reg't U. S. Col'd H. Art'y.

Appears on

Company Descriptive Book

of the organization named above.

DESCRIPTION.

Age 24 years; height 5 feet 6½ inches.

Complexion Blk

Eyes Blk; hair Blk

Where born Litchfield Co Conn

Occupation Farmer

ENLISTMENT.

When July 28, 1863.

Where Hartford

By whom Dodd; term 3 y'rs.

Remarks: / "Asst Hartford Comm. Affs Confd Dec 13/63

(383y) *Copyist.*

F | 11 H.A. | **U.S.C.T**

Giles Freeman

Appears with rank of Pvt on

Muster and Descriptive Roll of a Detachment of Drafted Men and Substitutes forwarded

for the 11 Reg't U.S. Col'd H.A. Roll dated

New Haven Conn Sep 3, 1863

Where born Conn

Age 24 years; occupation Farmer

Drafted and mustered in:

When Aug 25, 1863.

Where Hartford Conn. 1 Dist

Period 3 years.

Eyes Blk; hair Blk

Complexion Blk; height 5 ft. 6½ in.

Paid bounty and advance pay, $100

Bounty due $100

Where credited

Company to which assigned

Remarks:

Book mark: 5329-a-1877.

Leger

(340) *Copyist.*

F 11th H.A. | U.S.C.T

Giles Freeman

Appears with rank of Pvt on

Muster and Descriptive Roll of a Detachment of Drafted Men and Substitutes forwarded

for the 11 Reg't U. S. Col'd H.A. Roll dated

New Haven Conn Sept 4, 1863

Where born Conn

Age 24 years; occupation Farmer

Drafted and mustered in:

When Aug 25, 1863.

Where Hartford Ct. 1 Dist

Period 3 years.

Eyes Blk; hair Blk

Complexion Blk; height 5 ft 6½ in.

Paid bounty and advance pay, $ 100

Bounty due $ 100

Where credited

Company to which assigned

Remarks:

Book mark:

Leger

(340) *Copyist.*

F | 11 H. Art'y. | U.S.C.T.

Giles Truman

Priv., Co. C, 14 Reg't R. I. Col'd H. Art'y.*

Age 24 years.

Appears on

Company Muster-in Roll

of the organization named above. Roll dated Providence R.I., Sept 14, 1863.

Muster-in to date Sept. 14, 1863.

Joined for duty and enrolled:

When Aug 28th, 1863.

Where Providence R.I.

Period 3 years.

Valuation of horse, $ 100

Valuation of horse equipments, $ 100

Remarks: Drafted from 1st Dist. Conn.

* This organization subsequently became Co. C, 11 Reg't U. S. Colored Heavy Artillery.

Book mark:

Valentine

Copyist.

F | 11 H. Art'y. | U.S.C.T.

Giles Freeman

Corp, Co. C, 14 Reg't R. I. Col'd H. Art'y.*

Appears on

Company Muster Roll

for Sept. 14 to Dec 31, 1863.

Present or absent Present

Stoppage, $ 100 for

Due Gov't, $ 100 for

Valuation of horse, $ 100

Valuation of horse equipments, $ 100

Remarks:

Promoted Dec 13th 1863,

*This organization subsequently became Co. C, 11 Reg't U. S. Colored Heavy Artillery.

Book mark:

Valentine

Copyist.

F | 11 H. Art'y. | U.S.C.T.

Giles Truman

Corp, Co. C, 14 Reg't R. I. Col'd H. Art'y.*

Appears on

Company Muster Roll

for Jan. & Feb., 1864.

Present or absent Present.

Stoppage, $ 100 for

Due Gov't, $ 100 for

Valuation of horse, $ 100

Valuation of horse equipments, $ 100

Remarks: Appointed Dec 13th 63

*This organization subsequently became Co. C, 11 Reg't U. S. Colored Heavy Artillery.

Book mark:

Valentine

Copyist.

H | 11 H. Art'y. | U.S.C.T.

Giles Freeman

Corp, Co. C, 8 Reg't U. S. Col'd H. Art'y.*

Appears on

Company Muster Roll

for March & Apr, 1864.

Present or absent Present,

Stoppage, $ 100 for

Due Gov't, $ 100 for

Valuation of horse, $ 100

Valuation of horse equipments, $ 100

Remarks:

Stop for Cr G. Equipage 56¢

*This organization subsequently became Co. C, 11 Reg't U. S. Colored Heavy Artillery.

Book mark:

Valentine

(358) Copyist.

H | 11 H. Art'y. | U.S.C.T.

Giles Freeman

Corp, Co. C, 8 Reg't U. S. Col'd H. Art'y.*

Appears on

Company Muster Roll

for May & June, 1864.

Present or absent Present.

Stoppage, $ 100 for

Due Gov't, $ 100 for

Valuation of horse, $ 100

Valuation of horse equipments, $ 100

Remarks:

Stop for C. & G. Equipage 56¢

*This organization subsequently became Co. C, 11 Reg't U. S. Colored Heavy Artillery.

Book mark:

Valentine

(358) Copyist.

F | **11 H. Art'y.** | **U.S.C.T.**

Giles Freeman

Corpl., Co. C, 11 Reg't U. S. Col'd H. Art'y.

Appears on

Company Muster Roll

for July & Aug, 1864.

Present or absent Present

Stoppage, $ ---- 100 for ----

Due Gov't, $ ---- 100 for ----

Valuation of horse, $ ---- 100

Valuation of horse equipments, $ ---- 100

Remarks: Last pay Roll
C & G. C. 5:6 Appointed
Dec 13, 63 Issued April 19, 64

Book mark: ----

(358) Copyist.

F | 11 H. Art'y. | U.S.C.T.

Giles Freeman

Capt., Co. C, 11 Reg't U. S. Col'd H. Art'y.

Appears on

Company Muster Roll

for Sept & Oct, 1864.

Present or absent Present

Stoppage, $ 100 for

Due Gov't, $ 100 for

Valuation of horse, $ 100

Valuation of horse equipments, $ 100

Remarks:

Book mark:

Giles Freeman

Copyright

F | 11 H. Art'y. | U.S.C.T.

Giles Freeman

Corpl., Co. C, 11 Reg't U. S. Col'd H. Art'y.

Appears on

Company Muster Roll

for Nov & Dec, 1864

Present or absent Present

Stoppage, $ —— 45/100 for Ordnance

Due Gov't, $ ——/100 for

Valuation of horse, $ ——/100

Valuation of horse equipments, $ ——/100

Remarks:

Book mark:

Copyist.

F | 11 H. Art'y. | U.S.C.T.

Silas Freeman

Corpl, Co. C, 11 Reg't U. S. Col'd H. Art'y.

Appears on

Company Muster Roll

for Jan & Feb, 1865

Present or absent Present

Stoppage, $45/100 for Ordnance

Due Gov't, $100 for

Valuation of horse, $100

Valuation of horse equipments, $100

Remarks:

Book mark:

Copyist.

F | 11 H. Art'y. | U.S.C.T.

Silas Freeman

Corp., Co. C, 11 Reg't U. S. Col'd H. Art'y.

Appears on

Company Muster Roll

for Men & Apl, 1865.

Present or absent Present

Stoppage, $ 45/100 for ordnance

Due Gov't, $ 100 for

Valuation of horse, $ 100

Valuation of horse equipments, $ 100

Remarks:

Book mark:

(358) Copyist.

F | 11 H. Art'y. | U.S.C.T.

Giles Freeman

Corp'l, Co. C, 11 Reg't U. S. Col'd H. Art'y.

Appears on

Company Muster Roll

for May & June, 1865.

Present or absent Present

Stoppage, $ 100 for

Due Gov't, $ 100 for

Valuation of horse, $ 100

Valuation of horse equipments, $ 100

Remarks:

Book mark:

Bliss

Copyist.

F | 11 H. Art'y. | U.S.C.T.

Giles Freeman

Corp'l, Co. C, 11 Reg't U. S. Col'd H. Art'y.

Appears on

Company Muster Roll

for July and Aug., 1865.

Present or absent Present

Stoppage, $ 1 45/100 for Clothing.

Due Gov't, $ 00/100 for

Valuation of horse, $ 00/100

Valuation of horse equipments, $ 00/100

Remarks:

Book mark:

Bliss

Copyist.

F | 11 H. Art'y. | U.S.C.T.

Giles Freeman

Cerff, Co. C, 11 Reg't U. S. Col'd H. Art'y.

Appears on **Co. Muster-out Roll,** dated New Orleans La, Oct. 2, 186 5.

Muster-out to date Oct. 2, 186 5.

Last paid to Feby. 28, 186 5.

Clothing account:

Last settled ....., 186 ; drawn since $ 100

Due soldier $ ..... 100 ; due U. S. $ 214 22/100

Am't for cloth'g in kind or money adv'd $ 100

Due U. S. for arms, equipments, &c., $ 100

Bounty paid $ ..... 100 ; due $ 100 00/100

Remarks: Joined Regt. Orgn. Pvt. Dec. 13/63, Slop for one Musket & acct. re-claimed, Slop for C & G. Equip-age articles unknown 1.45

Book mark: Discharge on file with

Bliss

(361) *Copyist.*

over

JAN.15 6187034 ☆1891☆

Bookmark
the A.G. of Conn. See
s-329. a. A.G.O. (EB) 77

F. | 11. Hy. Arty USC

Giles Freeman

Corporal, Co. C, 11 Reg't USC Hy Arty

NOTATION.

Book mark: 5329—A—1877.

War Department,

Adjutant General's Office,

Washington, May 23, 1877.

On May 7, 1877, in a printed circular, the Adjutant General of the State of Connecticut reported this man's discharge certificate on file in his office.

A. M. M.

(438)

Copyist.

Co E, 11 U.S.Col'd H.Art'y.

Private	Private

CARD NUMBERS.

1	6189940	26	
2	6189090	27	
3	6189237	28	
4	6189383	29	
5	6189526	30	
6	6189670	31	
7	6189806	32	
8	6189935	33	
9	6190061	34	
10	6190193	35	
11	6190325	36	
12	6190455	37	
13	6190582	38	
14	9124884	39	
15		40	
16		41	
17		42	
18		43	
19		44	
20		45	
21		46	
22		47	
23		48	
24		49	
25		50	

Book Mark:

See also

R. & P. 521823

D 1799163 P.O. Murray

J. D. Marx Esq.

F | 11 H. Art'y. | U.S.C.T.

James L. Freeman

", Co. E, 11 Reg't U. S. Col'd H. Art'y.

Appears on

Company Descriptive Book

of the organization named above.

DESCRIPTION.

Age 19 years; height 5 feet 6¼ inches.

Complexion Dk.

Eyes Dk.; hair Dk.

Where born Glastenbury, Conn.

Occupation Farmer.

ENLISTMENT.

When Sept. 26, 1863.

Where Prov., R.I.

By whom J. C. Engley; term 3 y'rs.

Remarks:

O. J. Markle, Copyist.

(383d)

F | 11 H. Art'y. | U.S.C.T.

James D. Freeman

Pvt., Co. E, 14 Reg't R. I. Col'd H. Art'y.*

Age 17 years.

Appears on

Company Muster-in Roll

of the organization named above. Roll dated Providence, R.I., Oct. 5, 1863.

Muster-in to date Oct. 5, 1863.

Joined for duty and enrolled:

When Sept. 26, 186 .

Where Prov., R. I.

Period 3 years.

Valuation of horse, $ 100

Valuation of horse equipments, $ 100

Remarks: Glastenbury, N. Y.

* This organization subsequently became Co. E, 11 Reg't U. S. Colored Heavy Artillery.

Book mark:

C Chandler

Copyist.

F | 11 H. Art'y. | U.S.C.T.

James D. Freeman

Pvt., Co. E, 14 Reg't R. I. Col'd H. Art'y.*

Appears on

Company Muster Roll

for Oct. 5 to Dec. 31, 1863.

Present or absent Present

Stoppage, $ 100 for

Due Gov't, $ 100 for

Valuation of horse, $ 100

Valuation of horse equipments, $ 100

Remarks:

*This organization subsequently became Co. E, 11 Reg't U. S. Col'd Heavy Artillery.

Book mark:

C Chandler

(358) *Copyist.*

F | 11 H. Art'y. | U.S.C.T.

James D. Freeman

Pvt., Co. E, 14 Reg't R. I. Col'd H. Art'y.*

Appears on

Company Muster Roll

for Jan. & Feb., 1864.

Present or absent Present

Stoppage, $ 100 for

Due Gov't, $ 100 for

Valuation of horse, $ 100

Valuation of horse equipments, $ 100

Remarks: Due Laundress $1.75

*This organization subsequently became Co. E, 11 Reg't U. S. Col'd Heavy Artillery.

Book mark:

Chandler

Copyist.

F | 11 H. Art'y. | U.S.C.T.

James D. Freeman

Pvt, Co. E, 14 Reg't R. I. Col'd H. Art'y.*

Appears on

Company Muster Roll

for March & April, 1864.

Present or absent Present

Stoppage, $ 100 for

Due Gov't, $ 100 for

Valuation of horse, $ 100

Valuation of horse equipments, $ 100

Remarks: Due Laundress .75

*This organization subsequently became Co. E, 11 Reg't U. S. Col'd Heavy Artillery.

Book mark:

C Chandler

(358) Copyist.

F | 11 H. Art'y. | U.S.C.T.

James D. Freeman

For, Co. E, 8 Reg't U. S. Col'd H. Art'y.*

Appears on

Company Muster Roll

for May & June, 1864.

Present or absent Present

Stoppage, $ 100 for

Due Gov't, $ 100 for

Valuation of horse, $ 100

Valuation of horse equipments, $ 100

Remarks: Due Laundress .75

† This organization subsequently became Co. E, 11 Reg't U. S. Colored Heavy Artillery.

Book mark:

C Chandler

Copyist.

F | 11 H. Art'y. | U.S.C.T.

James D. Freeman

Pvt., Co. E, 11 Reg't U. S. Col'd H. Art'y.

Appears on

Company Muster Roll

for Jul. & Aug., 186 4.

Present or absent Present

Stoppage, $ 100 for

Due Gov't, $ 100 for

Valuation of horse, $ 100

Valuation of horse equipments, $ 100

Remarks: Fell April 17 1864.

Book mark:

J. Williams

(358) *Copyist.*

E | 11 H. Art'y. | U.S.C.T.

John D. Freeman

Pvt., Co. E, 11 Reg't U. S. Col'd H. Art'y.

Appears on

Company Muster Roll

for Sept & Oct, 1864.

Present or absent Present

Stoppage, $ 100 for

Due Gov't, $ 100 for

Valuation of horse, $ 100

Valuation of horse equipments, $ 100

Remarks: Enl. Sept 19-1861.
Due Laundress '25

Book mark:

Galloway

(358) *Copyist.*

F | 11 H. Art'y. | U.S.C.T.

Patrick D. Fallman

Pvt., Co. E, 11 Reg't U. S. Col'd H. Art'y.

Appears on

Company Muster Roll

for Nov. & Dec., 186x.

Present or absent Present

Stoppage, $ 100 for

Due Gov't, $ 100 for

Valuation of horse, $ 100

Valuation of horse equipments, $ 100

Remarks: Joined Apl 19/64
Deserted Aug 23-

Book mark:

(358) *Copyist.*

of | 11 H. Art'y. | U.S.C.T.

James D Freeman

Pvt., Co. E, 11 Reg't U. S. Col'd H. Art'y.

Appears on

Company Muster Roll

for Jan & Feb, 1865.

Present or absent Present

Stoppage, $ 20/100 for Ordnance

— Worker

Due Gov't, $ 100 for

Valuation of horse, $ 100

Valuation of horse equipments, $ 100

Remarks:

Book mark:

Galloway

(358) *Copyist.*

F | 11 H. Art'y. | U.S.C.T.

James D. Freeman

Pvt., Co. E, 11 Reg't U. S. Col'd H. Art'y.

Appears on

Company Muster Roll

for Mar. & Apl., 1865.

Present or absent Present

Stoppage, $ 20/100 for Wrshes

Due Gov't, $ 100 for

Valuation of horse, $ 100

Valuation of horse equipments, $ 100

Remarks:

Book mark: 1864

(358) *Copyist.*

F. | 11 H. Art'y. | U.S.C.T.

James D. Freeman

Priv., Co. E, 11 Reg't U. S. Col'd H. Art'y.

Appears on

Company Muster Roll

for May and June, 1865.

Present or absent Present.

Stoppage, $ 100 for

Due Gov't, $ 100 for

Valuation of horse, $ 100

Valuation of horse equipments, $ 100

Remarks:

Book mark:

(358) J. D. James Copyist.

F | 11 H. Art'y. | U.S.C.T.

James D. Freeman

Priv., Co. E, 11 Reg't U. S. Col'd H. Art'y.

Appears on

Company Muster Roll

for July and August, 1865.

Present or absent Present.

Stoppage, $ 100 for

Due Gov't, $ 100 for

Valuation of horse, $ 100

Valuation of horse equipments, $ 100

Remarks: Stop for one Hat, 97; one letter, 01.

Book mark:

(358) J. B. James *Copyist.*

F | **11** H. Art'y. | **U.S.C.T.**

James A. Freeman

Priv., Co. E, 11 Reg't U. S. Col'd H. Art'y.

Appears on **Co. Muster-out Roll,** dated

New Orleans, La., Oct. 2, 1865.

Muster-out to date Oct. 2, 1865.

Last paid to June 30, 1865.

Clothing account:

Last settled ....., 186 ; drawn since $ 100

Due soldier $ ..... 100 ; due U. S. $ 23 83/100

Am't for cloth'g in kind or money adv'd $ 100

Due U. S. for arms, equipments, &c., $ 100

Bounty paid $ none 100 ; due $ 100 00/100

Remarks: Joined at Org'l Org'n. Stop for one musket & accts retained 6.00; one haversack .97; one letter .01.

Book mark;

(361) J. B. James *Copyist.*

Freeman James D.

P, Co. 11, Reg't Mass

1 **Enclosures.**

Bed Cards	Final Statements
Burial Records	Furloughs or L. of A.
Certs. of Dis. for Discharge	Med. Certificates
C. M. Charges	Med. Des. Lists
Descriptive Lists	Orders
Discharge Certificates	Pris. of War Record
Enlistment Papers 1	Resignations

Other papers relating to—

Admission to Hosp'l	Furlough or L. of A.
Casualty Sheet	Med. Examination
Confinement	Misc. Information
Contracts	Pay or Clothing
Death or Effects	Personal Reports
Desertion	Rank
Discharge from Hosp'l	Transfer to Hosp'l
Discharge from Service	Transfer to V. R. C.
Duty	Transportation

DECLARATION OF RECRUIT.

I, James D Freeman desiring to VOLUNTEER as a Soldier in the *ARMY OF THE UNITED STATES*, for the term of 3 Years do declare that I am 19 years and months of age; that I have never been discharged from the United States service on account of disability or by sentence of a court martial, or by order, before the expiration of a term of enlistment; and I know of no impediment to my serving honestly and faithfully as a soldier for Three Years

Given at Providence
The 26th day of Sept 1863

Witness;
R Corcaden

James D Freeman

No. 449
James D Freeman
Volunteered at
By
Regiment of
Reg't of
Company (
Discharged
18 1861 DEC 11 RECEIVED 186

CONSENT IN CASE OF MINOR.

I, Do CERTIFY that I am the
of ; that the said
is years of age; and I do hereby freely give
my CONSENT to his **volunteering as a SOLDIER** in the ARMY OF THE UNITED STATES for the period of

Given at
The day of
Witness:

VOLUNTEER ENLISTMENT.

State of R I — Town of Providence

I James D Freeman born in Glastenbury in the State of Conn aged 19 years, and by occupation a Farmer DO HEREBY ACKNOWLEDGE to have volunteered this 26th day of Septr 1863 to serve as a SOLDIER in the ARMY OF THE UNITED STATES OF AMERICA, for the period of 3 years, unless sooner discharged by proper authority: Do also agree to accept such bounty, pay, rations and clothing, as are, or may be, established, by law for volunteers. And I, James D Freeman do solemnly swear, that I will bear true faith and allegiance to the *United States of America*, and that I will serve them honestly and faithfully against all their enemies or opposers whomsoever; and that I will observe and obey the orders of the President of the United States, and the orders of the officers appointed over me, according to the Rules and Articles of War.

Sworn and Subscribed to, at Providence this 26 day of Septr 1863 Before me R Corcadon Justice of the Peace } James D Freeman

I CERTIFY, ON HONOR, That I have carefully examined the above-named Volunteer, agreeable to the General Regulations of the Army, and that, in my opinion, he is free from all bodily defects and mental infirmity, which would, in any way, disqualify him from performing the duties of a soldier.

B. Macomber EXAMINING SURGEON.

I CERTIFY, ON HONOR, That I have minutely inspected the Volunteer, James D Freeman previously to his enlistment, and that he was entirely sober when enlisted; that to the best of my judgment and belief, he is of lawful age; and that, in accepting him as duly qualified to perform the duties of an able-bodied soldier, I have strictly observed the Regulations which govern the recruiting service. This soldier has dark *eyes* dark *hair*, dark *complexion*, is 5 *feet*, 6 1/4 *inches high*.

14th *Regiment of* R. I. H. A. *Volunteers*,

RECRUITING OFFICER.

Inside	Sergeant

CARD NUMBERS.

1	61814631	26	
2	54675691	27	
3	61816311	28	
4	61901951	29	
5	61902851	30	
6	61904161	31	
7	61905361	32	
8	91249811	33	
9		34	
10		35	
11		36	
12		37	
13		38	
14		39	
15		40	
16		41	
17		42	
18		43	
19		44	
20		45	
21		46	
22		47	
23		48	
24		49	
25		50	

Book Mark:

See also

J. D. Mark Esq.

D1212743- P.O. Med
S- 2185749 P.O. Wile
D2909548 and 75

F | 11 H. Art'y. | U.S.C.T.

James H. Freeman

, Co. E, 11 Reg't U. S. Col'd H. Art'y.

Appears on

Company Descriptive Book

of the organization named above.

DESCRIPTION.

Age 27 years; height 6 feet inches.

Complexion Dk.

Eyes Dk.; hair Dk.

Where born Providence, R. I.

Occupation Sailor.

ENLISTMENT.

When Aug. 8, 1864.

Where Prov., R. I.

By whom ; term 3 y'rs.

Remarks: Substitute for Richard S. Bush 1st Cong'l Dist. State of Rhode Island. Amt of Clothing $15.95. Promoted to Corp. June 12 per S. O. No. 18 from Regtl. Hd. Qrs. Donaldsonville, La. Promoted to Sergt. Sept. 12 per S. O. #35 R. H. Q. Donaldsonville, La. Asst to Co. per S. O. #12 R. H. 2.

O. J. Markle, Copyist.

F | 11 H.A. | **U.S.C.T.**

James H. Freeman (8th Regt)

Pvt, Co. ---, 11 Reg't U. S. Col'd H.A.

Appears on a

Detachment Muster Roll

of the organization named above

for July & Aug, 186 4.

Station New Haven Conn.

Present or absent Present

Stoppage, $ 100 for

Due Gov't, $ 100 for

Valuation of horse, $ 100

Valuation of horse equipments, $ 100

Remarks: Substitute.

Book mark:

Holcomb

(844) *Copyist.*

11" Hy Artly

U. S.	8 Pt. Artly	**U.S.C.T.**

James Freeman

Pvt., Co. ....., 8 Reg't U. S. Col'd Pt. Artly

Appears on a

Detachment Muster Roll

of the organization named above

for July & Aug, 1864.

Station New Haven Conn

Present or absent Not stated

Stoppage, $ 100 for

Due Gov't, $ 100 for

Valuation of horse, $ 100

Valuation of horse equipments, $ 100

Remarks:

Last on roll of Pt. A.

Book mark:

(344) Jr. J. McCarney Copyist.

N. A.

D | 11 | U.S.C.T.

James H. Freeman

Appears with rank of Pvt on

Muster and Descriptive Roll of a Detachment of Substitutes forwarded

for the 11 Reg't U. S. Col'd N A Roll dated

New Haven Ct. Mar. 24, 1865.

Where born Providence, R.I.

Age 24 y'rs; occupation Sailor

When enlisted Aug. 8, 1864

Where enlisted Providence R.I.

For what period enlisted 3 years.

Eyes Black; hair Black

Complexion Black; height 6 ft. in.

When mustered in Aug. 8, 1864

Where mustered in Providence, R.I.

Bounty paid $100; due $100

Where credited 1st Cong. Dist. R.I.

Company to which assigned Co. D Town of Providence

Remarks: Substitute for Richard S. Bush.

Book mark:

W. Anderson

Copyist.

(340b)

F | 11 H. Art'y. | U.S.C.T.

Edward F. Freeman

Capt., Co. E, 11 Reg't U. S. Col'd H. Art'y.

Appears on

Company Muster Roll

for March, 1865.

Present or absent Present

Stoppage, $ 100 for

Due Gov't, $ 100 for

Valuation of horse, $ 100

Valuation of horse equipments, $ 100

Remarks: Joined from Dept. of Rappahannock April 14-1865. No papers rec'd.

Book mark:

Gatteaudy

(358) *Copyist.*

F | 11 H. Art'y. | U.S.C.T.

James H. Freeman

Serjt., Co. E, 11 Reg't U. S. Col'd H. Art'y.

Appears on

Company Muster Roll

for May and June, 1865.

Present or absent Present.

Stoppage, $ 100 for

Due Gov't, $ 100 for

Valuation of horse, $ 100

Valuation of horse equipments, $ 100

Remarks: Joined from Depot of Recruits April 14/65. No Papers received. Appointed Corpl. June 12/65 Per. S.O. No. 18 from Regt'l Hd. Qrs.

Book mark:

(358) J. B. Jones Copyist.

f. | 11 H. Art'y. | U.S.C.T.

James H. Freeman

Corpl., Co. E, 11 Reg't U. S. Col'd H. Art'y.

Appears on

Company Muster Roll

for July and August, 1865.

Present or absent Present.

Stoppage, $ 100 for

Due Gov't, $ 100 for

Valuation of horse, $ 100

Valuation of horse equipments, $ 100

Remarks: Stop for one Canteen, 65.

Book mark:

(358) J. B. Jones *Copyist.*

of | **11 H. Art'y.** | **U.S.C.T.**

James H. Freeman

Sgt., Co. E, 11 Reg't U. S. Col'd H. Art'y.

Appears on **Co. Muster-out Roll,** dated

New Orleans, La., Oct. 2, 1865.

Muster-out to date Oct. 2, 1865.

Last paid to June 30, 1865.

Clothing account:

Last settled ....., 186 ; drawn since $ 100

Due soldier $ 12 88/100; due U. S. $ 100

Am't for cloth'g in kind or money adv'd $ 100

Due U. S. for arms, equipments, &c., $ 100

Bounty paid $ none 100; due $ 100 00/100

Remarks: Joined as recruit. Pro. to June 12/65, then Corpl. to Sept. 12/65. Stop for one month's pay and rations retained $6.00; one canteen, 65.

Book mark: .....

---

(361) J. B. Jones *Copyist.*

[redacted]

The records of this division furnish no evidence of disability.

Please report as to his receipt & disposition, (and any record of disability)

He was mustered in Aug 8/64 at Providence, R. I. 1st Div R.I.

2d Div V.R.C.

July 7/88

D.C. [illegible]

Please return.

Mr Pratt.

This man was received at Dept Rendezvous New Haven Conn. August 12 1864. Sent to 11th U.S.C.H. Artly March 27 1865; detachment was delivered at Hd 2nd Camp of distribution. New Orleans La. April 12 1865. No record of disability or detention at Dept Rendezvous

E.D.R.O.

July 24. 88

Freeman, James H.

....., Co. E, 11 Regt. U.S.C.H.A.

Enclosures.

Bed Cards	Descriptive Lists
Burial Records	Final Statements
Certs. of Dis. for Discharge	Furloughs
C. M. Charges	Med. Des. Lists
Med. Certificates	Orders 1

Enlist. ppr 2

Other papers relating to—

Admission to Hosp'l	Furlough
Casualty Sheet (Officer's)	Med. Examination
Confinement	Misc. Information 1
Contracts	Pay or Clothing
Death or Effects	Personal Reports
Desertions	Rank 1
Discharge from Hosp'l	Transfer to Hosp'l
Discharge from Service	Transfer to V. R. C.
Duty	Transportation

Head Quarters U S Forces
Donaldsonville La
August 2nd 1863

Special Order No 61.

Col J. H. Sypher
Commanding

Jack Freeman
11 - Vol N.A.

Headqrs. 26. S. Forces.
Donaldsonville La. Aug 2d. 1865.

Special Orders
No. 61.

Corporal James A. Freeman, Co. E., 11th 26. S. C. A(Arty). is hereby detailed to proceed to New Orleans, La.. with a guard of one man in charge of prisoners, The guard will take (4) four days rations and will be furnished by the Commanding Officer of the 2d Bat. 11th Regt. 26. S. C. A.(Arty).

Corporal. Freeman will report to Capt. J. M. Addeman, Provost Marshal, Parish of Ascension, Donaldsonville La. for orders.

By order of
Colonel J. H. Hyther
Commanding Post.
L. G. Whiting Jr
1st Lieut. 11th 26. S. C. A.(Arty).
And Post Adjutant.

400. 2D Donaldsonville La 1865
L. R. Sept 12, 1865

Clancy, Wm. H. 1st Lieut Comdg
Co. E. 11th Cl. S. C Arty (Hy)

Transmits recommendation
for the promotion of non-
commissioned officers and
privates in his Company

Hd. Qrs. 2nd Batt. 11 Cl S.C.A. (Hy)
Donaldsonville La. Sept. 12/65

Respectfully Forwarded
Approved
Charles C. Cragin
Capt. 11th Cl. S.C. C. A. (Hy.)
Comdg. 2nd Batt.

Papers
Issued -
See S.O.
No. 35. Sept 12/65

Rec'd Regt. H. Qrs Sept. 12 65

Jas. F. C. Farmer

Donaldsonville, La.
Sept 12th 1865

1st Lieut A. Carey Whiting Jr.
Adjutant 11th Regt Vol. Corps d'Afrique

Sir:-

I have the honor to recommend that Corporal James H. Freeman Co. E. 11th Vol. Corps d'Afrique be promoted to Sergeant vice Atwood deceased, - and that Private John C. Seymore be promoted to Corporal, to fill vacancy.

Very respectfully,
Your obdt servt.
Wm H. Clement
1st Lieut 11th Vol. Corps d'Afrique
Comdg Company.

DECLARATION OF SUBSTITUTE.

I, James H. Freeman desiring to ENLIST in the **Army of the United States,** for THREE YEARS, ***Do declare,*** That I am Twenty Seven years and ~ months of age; that I have never been discharged from the United States service on account of disability or by sentence of a court martial; and I know of no impediment to my serving honestly and faithfully as a soldier for three years.

GIVEN at Providence R.I.

the 8th day of August 1864.

WITNESS:

James O Dunn

James H. Freeman

No. 28

Name to be Entered

Enlisted at Providence R.I.

for the 2d Reg't H. A. Art.

As Substitute for

Richard S. Bennett

an enrolled man

On the 8th day of August, 1864.

By

Wm. B. Mountain,

Wm. H. Potter

T. G. Hutchings.

Board of Enrollment,

1st Dist. of Rhode Island

11th Ward

(No. ~~40~~ 39.)

SUBSTITUTE

VOLUNTEER ENLISTMENT.

STATE OF Rhode Island

City ~~TOWN~~ OF Providence R.I. 2d Ward

I, James H. Freeman, 6ol.a born in the State of Rhode Island, aged Twenty Seven years, and by occupation a Seaman Do HEREBY ACKNOWLEDGE to have agreed with Richard S. Bush, Esq., of the 2d Ward City of Providence R.I.

to become his **SUBSTITUTE** in the Military Service, for a sufficient consideration paid and delivered to me, on the Eighth day of August, 1864; and having thus agreed with said Richard S. Bush, I DO HEREBY ACKNOWLEDGE to have enlisted this Eighth day of August, 1864, to serve as a ***Soldier*** in the **Army of the United States of America,** for the period of *THREE YEARS*, unless sooner discharged by proper authority: I do also agree to accept such bounty, pay, rations, and clothing, as are, or may be, established by law for soldiers. And I do solemnly swear that I will bear true and faithful allegiance to the ***United States of America;*** that I will serve them honestly and faithfully against all their enemies or opposers whomsoever; and that I will observe and obey the orders of the President of the United States, and the orders of the Officers appointed over me, according to the Rules and Articles of War.

SWORN and subscribed to, at Providence R.I.
this Eighth day of August 1864.
BEFORE Wm E Hamblin
Justice of the Peace

James H. Freeman

We certify, on honor, That we have carefully examined the above-named Volunteer Substitute agreeably to the Regulations, and that, in our opinion, he is free from all bodily defects and mental infirmity which would in any way disqualify him from performing the duties of a soldier; that he was entirely sober when enlisted; that he is of lawful age, (not under 18 years;) and that, in accepting him as duly qualified to perform the duties of an able-bodied soldier, and as a Substitute in lieu of Richard S. Bush Enrolled, ~~drafted~~ in the 2d Ward City of Providence R.I., June, 1863, we have strictly observed the Regulations which govern in such cases. This soldier has Black eyes, Black hair, Black complexion; is 6 feet — inches high.

Wm E Hamblin
Provost Marshal.

Wm H Potter
Commissioner of Board.

C G M Knight
Surgeon of Board.

Board of Enrollment of 1st *Dist. of* Rhode Island.

DECLARATION OF SUBSTITUTE.

I, James H. Freeman desiring to ENLIST in the **Army of the United States,** for THREE YEARS, ***Do declare,*** That I am Twenty Seven years and ~ months of age; that I have never been discharged from the United States service on account of disability or by sentence of a court martial; and I know of no impediment to my serving honestly and faithfully as a soldier for three years.

GIVEN at Providence R.I.

the 8th day of August 1864.

WITNESS:

James O Swan. James H. Freeman

No. 28.

James H. Freeman

Enlisted at Providence R.I.

Aug 8th 64: in U.S. Army, Cav

As Substitute for

Richard O. Smith

an unwilling man

On the 8th day of August, 1864

By

Wm. O. Saunders

Wm. G. Potter

C. E. Burleigh

Board of Enrollment,

1st Dist. of Rhode Island

(No. 40.)

SUBSTITUTE

VOLUNTEER ENLISTMENT.

STATE OF Rhode Island City ~~TOWN~~ OF 2d Ward Providence R.D.

I, James H. Freeman Col° born in the State of Rhode Island, aged Twenty Seven years, and by occupation a Seaman DO HEREBY ACKNOWLEDGE to have agreed with Richard S. Bush of Providence R.D., Esq., of the 2d Ward City of Providence R.D. to become his **SUBSTITUTE** in the Military Service, for a sufficient consideration paid and delivered to me, on the Eighth day of August, 1864; and having thus agreed with said Richard S. Bush, I DO HEREBY ACKNOWLEDGE to have enlisted this Eighth day of August, 1864, to serve as a ***Soldier*** in the **Army of the United States of America,** for the period of *THREE YEARS*, unless sooner discharged by proper authority: I do also agree to accept such bounty, pay, rations, and clothing, as are, or may be, established by law for soldiers. And I do solemnly swear that I will bear true and faithful allegiance to the ***United States of America;*** that I will serve them honestly and faithfully against all their enemies or opposers whomsoever; and that I will observe and obey the orders of the President of the United States, and the orders of the Officers appointed over me, according to the Rules and Articles of War.

SWORN and subscribed to, at Providence R.D.
this Eighth day of August 1864.
BEFORE Wm E Hamlen
Justice of the Peace

James H. Freeman

We certify, on honor, That we have carefully examined the above-named Volunteer Substitute agreeably to the Regulations, and that, in our opinion, he is free from all bodily defects and mental infirmity which would in any way disqualify him from performing the duties of a soldier; that he was entirely sober when enlisted; that he is of lawful age, (not under 18 years;) and that, in accepting ~~him~~ as duly qualified to perform the duties of an able-bodied soldier, and as a Substitute in lieu of Richard S Bush Enrolled, ~~drafted~~ in 2d Ward City of Providence R.D. June, 1863, we have strictly observed the Regulations which govern in such cases. This soldier has Black eyes, Black hair, Black complexion; is 6 feet — inches high.

Wm E Hamlen
Provost Marshal.

Wm H Potter
Commissioner of Board.

O J M Knight
Surgeon of Board.

Board of Enrollment of 1st *Dist. of* Rhode Island

U.S.A., 11 U.S.Col'd H.A[illegible]y.

Private	Corporal

CARD NUMBERS.

1	6197873	26	
2	6198029	27	
3	6198177	28	
4	6198336	29	
5	6198493	30	
6	6198615	31	
7	6198760	32	
8	6198905	33	
9	6199044	34	
10	6199177	35	
11	6199306	36	
12	6199434	37	
13	6199553	38	
14	9125626	39	
15		40	
16		41	
17		42	
18		43	
19		44	
20		45	
21		46	
22		47	
23		48	
24		49	
25		50	

Book Mark:

See also

F | 11 H. Art'y. | U.S.C.T.

John H Freeman

, Co. K, 11 Reg't U. S. Col'd H. Art'y.

Appears on

Company Descriptive Book

of the organization named above.

DESCRIPTION.

Age 25 years; height 5 feet 6½ inches.

Complexion Mulatto

Eyes Blk; hair Blk

Where born Auburn N.Y.

Occupation Farmer

ENLISTMENT.

When Dec 5, 186 .

Where Prov R. I.

By whom J C Engly; term 3 y'rs.

Remarks: Appointed Corpl July 3. 1864
Mustered out Oct 2/65

Griffith

(3830) Copyist.

I | 11 H. Art'y. | U.S.C.T.

John W. Freeman

Pt., Co. K, 14 Reg't R. I. Col'd H. Art'y.*

Age 25 years.

Appears on

Company Muster-in Roll

of the organization named above. Roll dated Cep nr. Providence R.I Dec 17, 1863.

Muster-in to date Dec 17, 1863.

Joined for duty and enrolled:

When Dec 3, 1863.

Where Providence

Period 3 years.

Valuation of horse, $100

Valuation of horse equipments, $100

Remarks:

* This organization subsequently became Co. K, 11 Reg't U. S. Colored Heavy Artillery.

Book mark:

J. K. Stewart

(356) Copyist.

F | 11 H. Art'y. | U.S.C.T.

John W. Freeman

Pt., Co. K, 14 Reg't R. I. Col'd H. Art'y.*

Appears on

Company Muster Roll

for Dec 17th Dec 31, 1863.

Present or absent Present

Stoppage, $.....100 for .....

.....

Due Gov't, $.....100 for .....

.....

Valuation of horse, $.....100

Valuation of horse equipments, $.....100

Remarks:.....

.....

.....

.....

.....

.....

*This organization subsequently became Co. K, 11 Reg't U. S. Colored Heavy Artillery.

Book mark:.....

J. H. Stewart

(358) *Copyist.*

F | 11 H. Art'y. | U.S.C.T.

John W. Freeman

R, Co. K, 14 Reg't R. I. Col'd H. Art'y.*

Appears on

Company Muster Roll

for Jan & Feb, 1864.

Present or absent Present

Stoppage, $ 100 for

Due Gov't, $ 100 for

Valuation of horse, $ 100

Valuation of horse equipments, $ 100

Remarks:

*This organization subsequently became Co. K, 11 Reg't U. S. Colored Heavy Artillery.

Book mark:

J. F. Stewart

(358) *Copyist.*

I | 11 H. Art'y. | U.S.C.T.

John W. Freeman

Pt, Co. K, 14 Reg't R. I. Col'd H. Art'y.*

Appears on

Company Muster Roll

for Mch & Apl, 1864.

Present or absent Present

Stoppage, $ 100 for

Due Gov't, $ 100 for

Valuation of horse, $ 100

Valuation of horse equipments, $ 100

Remarks: Stop for wipes .20

*This organization subsequently became Co. K, 11 Reg't U. S. Colored Heavy Artillery.

Book mark:

J. W. Stewart

(358) *Copyist.*

— | **11 H. Art'y.** | **U.S.C.T.**

John W. Freeman

Co. K, 8 Reg't U. S. Col'd H. Art'y.*

Appears on

Company Muster Roll

for May & June, 1864.

Present or absent Present

Stoppage, $ 100 for

Due Gov't, $ 100 for

Valuation of horse, $ 100

Valuation of horse equipments, $ 100

Remarks:

† This organization subsequently became Co. K, 11 Reg't U. S. Colored Heavy Artillery.

Book mark:

R Turnbull

(358) *Copyist.*

F | 11 H. Art'y. | U.S.C.T.

John W Freeman

Corp'l, Co. K, 11 Reg't U. S. Col'd H. Art'y.

Appears on

Company Muster Roll

for July & Aug, 1864.

Present or absent Present

Stoppage, $ 100 for

Due Gov't, $ 22/100 for Clothing

Valuation of horse, $ 100

Valuation of horse equipments, $ 100

Remarks: Apptd Corpl July 3/64

Enl'd on 19 Apr/61 $ 6 per mo due from enlistment

3/64

Book mark:

Howard

(358) Copyist.

5 | 11 H. Art'y. | U.S.C.T.

Sam'l Freeman

Corp'l, Co. K, 11 Reg't U. S. Col'd H. Art'y.

Appears on

Company Muster Roll

for Sept & Oct, 1864.

Present or absent Present

Stoppage, $ 100 for

Due Gov't, $ 49/100 for Camp & Garrison Equipage.

Valuation of horse, $ 100

Valuation of horse equipments, $ 100

Remarks: Recruited Corp'l July 3/64.

Book mark:

Samuel

(358) *Copyist.*

F | 11 H. Art'y. | U.S.C.T.

John W Freeman

Corp'l, Co. K, 11 Reg't U. S. Col'd H. Art'y.

Appears on

Company Muster Roll

for Nov & Dec, 1864.

Present or absent Present

Stoppage, $ 100 for

Due Gov't, $ 44/100 for Ordnance

Valuation of horse, $ 100

Valuation of horse equipments, $ 100

Remarks: Appointed Corpl July 3/64 Due U S for Clothing 7/64

Book mark:

(358) *Copyist.*

F | 11 H. Art'y. | U.S.C.T.

John W Truman

Cor'l Co. K, 11 Reg't U. S. Col'd H. Art'y.

Appears on

Company Muster Roll

for Jan & Feb, 1865.

Present or absent Present

Stoppage, $ 100 for

Due Gov't, $ 44/100 for Ordnance.

Valuation of horse, $ 100

Valuation of horse equipments, $ 100

Remarks: Due U S for
C. F. G. 2 42 Cts.

Book mark:

(358) *Copyist.*

(+) | **11** H. Art'y. | **U.S.C.T.**

John W. Freeman

Corp'l, Co. K, 11 Reg't U. S. Col'd H. Art'y.

Appears on

Company Muster Roll

for March & April, 1865.

Present or absent Present

Stoppage, $ 100 for

Due Gov't, $ 44 100 for Clothing

Valuation of horse, $ 100

Valuation of horse equipments, $ 100

Remarks: Drawn for C. & G. E. Clothing

Book mark :

(358) Copyist.

J | 11 H. Art'y. | U.S.C.T.

John H. Freeman

Corpl, Co. K, 11 Reg't U. S. Col'd H. Art'y.

Appears on

Company Muster Roll

for May & June, 186 5.

Present or absent Present

Stoppage, $ 100 for

Due Gov't, $ 03/100 for C. & G. E

Valuation of horse, $ 100

Valuation of horse equipments, $ 100

Remarks:

Book mark:

(358) Copyist.

H | 11 H. Art'y. | U.S.C.T.

John H. Truman

Corp., Co. K, 11 Reg't U. S. Col'd H. Art'y.

Appears on

Company Muster Roll

for July & Aug, 1865.

Present or absent Present

Stoppage, $ 03/100 for C & E

lost and destroyed

Due Gov't, $ 100 for

Valuation of horse, $ 100

Valuation of horse equipments, $ 100

Remarks:

Book mark:

(358) Copyist.

F | **11** H. Art'y. | **U.S.C.T.**

John H. Freeman

Corp., Co. L, 11 Reg't U. S. Col'd H. Art'y.

Appears on **Co. Muster-out Roll,** dated

New Orleans, La., Oct. 2, 1865.

Muster-out to date Oct. 2, 1865.

Last paid to Feb. 28, 1865.

Clothing account:

Last settled ....., 186 ; drawn since $ 100

Due soldier $ 9 07/100 ; due U. S. $ 100

Am't for cloth'g in kind or money adv'd $ 100

Due U. S. for arms, equipments, &c., $ 6 63/100

Bounty paid $ None 100 ; due $ 100 00/100

Remarks: Joined at Org. Regt. Pvt. to July 3rd/64. Deserted for 1 Crossed Cannon Rock. 1 Musket 1 Equipments retained.

Book mark: V. 241. P. 48. 77.

Spreicher

(361) *Copyist.*

Freeman John H.

P, Co. 11, Reg't Mass Inf

1 **Enclosures.**

Bed Cards	Final Statements
Burial Records	Furloughs or L. of A.
Certs. of Dis. for Discharge	Med. Certificates
C. M. Charges	Med. Des. Lists
Descriptive Lists	Orders
Discharge Certificates	Pris. of War Record
Enlistment Papers 1	Resignations

Other papers relating to—

Admission to Hosp'l	Furlough or L. of A.
Casualty Sheet	Med. Examination
Confinement	Misc. Information
Contracts	Pay or Clothing
Death or Effects	Personal Reports
Desertion	Rank
Discharge from Hosp'l	Transfer to Hosp'l
Discharge from Service	Transfer to V. R. C.
Duty	Transportation

DECLARATION OF RECRUIT.

I, John W Freeman desiring to VOLUNTEER as a Soldier in the *ARMY OF THE UNITED STATES*, for the term of three years do declare that I am 25 years and months of age; that I have never been discharged from the United States service on account of disability or by sentence of a court martial, or by order, before the expiration of a term of enlistment; and I know of no impediment to my serving honestly and faithfully as a soldier for three year

Given at Chor

The 5 day of Dec 18 67

Witness:

Wm Addeman

John W. Freeman

Illinois

55

John W Freeman

Volunteered at Chor

Dec 5

By Maj R C Ingley

14 Regiment of Cavalry

186 3,

enlistment; last served in Company ( ) [illegible]

Reg't of

Discharged 18

DEC 11 1871

CONSENT IN CASE OF MINOR.

I, Do CERTIFY that I am the

of ; that the said

is years of age; and I do hereby freely give

my CONSENT to his volunteering as a SOLDIER in the ARMY OF THE UNITED STATES for the period of

Given at

The day of

Witness

VOLUNTEER ENLISTMENT.

State of N. Y. Town of Providence

I, John W Freeman born in Auburn

in the State of New York aged 25 years, and by occupation a Farmer DO HEREBY ACKNOWLEDGE to have volunteered this 5th day of Dec 1863 to serve as a SOLDIER in the ARMY OF THE UNITED STATES OF AMERICA, for the period of three years, unless sooner discharged by proper authority: Do also agree to accept such bounty, pay, rations and clothing, as are, or may be, established, by law for volunteers. And I, John W Freeman do solemnly swear, that I will bear true faith and allegiance to the *United States of America*, and that I will serve them honestly and faithfully against all their enemies or opposers whomsoever; and that I will observe and obey the orders of the President of the United States, and the orders of the officers appointed over me, according to the Rules and Articles of War.

Sworn and Subscribed to, at Providence

this 5th day of Dec 1863

BEFORE me John Lathrop Public Notary

John W Freeman

I CERTIFY, ON HONOR, That I have carefully examined the above-named Volunteer, agreeable to the General Regulations of the Army, and that, in my opinion, he is free from all bodily defects and mental infirmity, which would, in any way, disqualify him from performing the duties of a soldier.

Johnson Eastwick M.D.

EXAMINING SURGEON.

I CERTIFY, ON HONOR, That I have minutely inspected the Volunteer, John W Freeman previously to his enlistment, and that he was entirely sober when enlisted; that to the best of my judgment and belief, he is of lawful age; and that, in accepting him as duly qualified to perform the duties of an able-bodied soldier, I have strictly observed the Regulations which govern the recruiting service. This soldier has Black *eyes* Black *hair*, Mulatto *complexion*, is five *feet*, 6½ *inches high*.

Major 14 *Regiment of* New York *Volunteers*,

RECRUITING OFFICER.

Co. 4, 11 U.S.Col'd H. Art'y.

Private	Corporal

CARD NUMBERS.

1	6192510	26	
2	6192668	27	
3	6192814	28	
4	6192960	29	
5	6193100	30	
6	6193205	31	
7	6193341	32	
8	6193471	33	
9	6193598	34	
10	6193727	35	
11	6193857	36	
12	6193984	37	
13	6194112	38	
14	9125180	39	
15		40	
16		41	
17		42	
18		43	
19		44	
20		45	
21		46	
22		47	
23		48	
24		49	
25		50	

Book Mark:

See also

F | 11 H. Art'y. | U.S.C.T.

Lewis H. Freeman

, Co. G, 11 Reg't U. S. Col'd H. Art'y.

Appears on

Company Descriptive Book

of the organization named above.

DESCRIPTION.

Age 25 years; height 5 feet 7½ inches.

Complexion Dark.

Eyes Dark; hair Dark.

Where born Auburn, New York.

Occupation Barber.

ENLISTMENT.

When Oct. 30, 1863.

Where Prov., R. I.

By whom J. C. Engley; term 3 y'rs.

Remarks: Promoted from Private to be Corpl. Aug. 15, 1864.

(383v) O. L. Markle, *Copyist.*

F. | 11 H. Art'y. | U.S.C.T.

Lewis H. Freeman

Pvt, Co. G, 14 Reg't R. I. Col'd H. Art'y.*

Age 25 years.

Appears on

Company Muster-in Roll

of the organization named above. Roll dated Providence R. I. Nov. 4, 1863.

Muster-in to date Nov. 4, 1863.

Joined for duty and enrolled:

When Oct. 30, 1863.

Where Prov R. I.

Period 3 years.

Valuation of horse, $ 100

Valuation of horse equipments, $ 100

Remarks:

* This organization subsequently became Co. G, 11 Reg't U. S. Colored Heavy Artillery.

Book mark:

Ramsey

(356) Copyist.

F. | 11 H. Art'y. | U.S.C.T.

Lewis H. Freeman

Pvt, Co. G, 14 Reg't R. I. Col'd H. Art'y.*

Appears on

Company Muster Roll

for Nov 4 to Dec 31, 1863.

Present or absent Present.

Stoppage, $ 100 for

Due Gov't, $ 100 for

Valuation of horse, $ 100

Valuation of horse equipments, $ 100

Remarks:

* This organization subsequently became Co. G, 11 Reg't U. S. Colored Heavy Artillery.

Book mark:

Ramsey

(358) Copyist.

F. | 11 H. Art'y. | U.S.C.T.

Lewis H. Freeman

Pvt, Co. G, 14 Reg't R. I. Col'd H. Art'y.*

Appears on

Company Muster Roll

for Jan & Feb, 1864.

Present or absent Present.

Stoppage, $ 100 for

Due Gov't, $ 100 for

Valuation of horse, $ 100

Valuation of horse equipments, $ 100

Remarks:

* This organization subsequently became Co. G, 11 Reg't U. S. Colored Heavy Artillery.

Book mark:

Ramsey

(358) Copyist.

J. | 11 H. Art'y. | U.S.C.T.

Lewis H. Freeman

Pvt, Co. G, 14 Reg't R. I. Col'd H. Art'y.*

Appears on

Company Muster Roll

for Mar & Apr, 1864.

Present or absent Present.

Stoppage, $ 100 for

Due Gov't, $ 100 for

Valuation of horse, $ 100

Valuation of horse equipments, $ 100

Remarks:

* This organization subsequently became Co. G, 11 Reg't U. S. Colored Heavy Artillery.

Book mark:

Ramsey

Copyist.

J. | 11 H. Art'y. | U.S.C.T.

Lewis A. Freeman

Pvt., Co. G, 8 Reg't U. S. Col'd H. Art'y.*

Appears on

Company Muster Roll

for May & June, 1864.

Present or absent Present.

Stoppage, $ 100 for

Due Gov't, $ 100 for

Valuation of horse, $ 100

Valuation of horse equipments, $ 100

Remarks: Stop for one pr. of scales.

† This organization subsequently became Co. G, 11 Reg't U. S. Colored Heavy Artillery.

Book mark:

Ramsey

Copyist.

A | 11 H. Art'y. | U.S.C.T.

Lewis H. Freeman.

Corpl, Co. G, 11 Reg't U. S. Col'd H. Art'y.

Appears on

Company Muster Roll

for July & Aug., 1864.

Present or absent Present.

Stoppage, $ 100 for

Due Gov't, $ 100 for

Valuation of horse, $ 100

Valuation of horse equipments, $ 100

Remarks: Appt. Corpl
August 15, 1864.
Shot for 1 pair scales
.50

Book mark:

Sitter.

(358) Copyist.

F. | **11 H. Art'y.** | **U.S.C.T.**

Lewis H. Freeman.

Corpl, Co. G, 11 Reg't U. S. Col'd H. Art'y.

Appears on

Company Muster Roll

for Sept. & Oct., 1864.

Present or absent Present.

Stoppage, $ 100 for

Due Gov't, $ 100 for

Valuation of horse, $ 100

Valuation of horse equipments, $ 100

Remarks: Free Asm. 19/61.
Appt'd Corpl Aug.
15, '64. Slop for 1
Cross Cas. .02

Book mark:

Sitler.

(358) *Copyist.*

F. | 11 H. Art'y. | U.S.C.T.

Lewis H. Freeman.

Corpl, Co. G, 11 Reg't U. S. Col'd H. Art'y.

Appears on

Company Muster Roll

for Nov. & Dec., 1864.

Present or absent Present.

Stoppage, $ 100 for

Due Gov't, $ 100 for

Valuation of horse, $ 100

Valuation of horse equipments, $ 100

Remarks: Appointed Corp'l Aug. 13, 1864. Stop for 1 Cross cam. .02 1 Inv. scales .50

Book mark:

Sitler.

(358) *Copyist.*

F. | **11** H. Art'y. | **U.S.C.T.**

Lewis H. Freeman.

Corpl, Co. G, 11 Reg't U. S. Col'd H. Art'y.

Appears on

Company Muster Roll

for Jan. & Feb., 1865.

Present or absent Present.

Stoppage, $ 100 for

Due Gov't, $ 100 for

Valuation of horse, $ 100

Valuation of horse equipments, $ 100

Remarks: Stop for 1 Cross Carv. 02

Book mark:

Sitter.

(358) *Copyist.*

F. | 11 H. Art'y. | U.S.C.T.

Lewis H. Freeman.

Corp'l, Co. G, 11 Reg't U. S. Col'd H. Art'y.

Appears on

Company Muster Roll

for Mar. & Apr., 1865.

Present or absent Present.

Stoppage, $ 100 for

Due Gov't, $ 100 for

Valuation of horse, $ 100

Valuation of horse equipments, $ 100

Remarks: Sloth fov!
Cross Cannon .02

Book mark:

Sitler.

(358) *Copyist.*

G | 11 H. Art'y. | U.S.C.T.

Lewis H Freeman

Corpl, Co. G, 11 Reg't U. S. Col'd H. Art'y.

Appears on

Company Muster Roll

for May & June, 186 3.

Present or absent Present

Stoppage, $ 100 for

Due Gov't, $ 100 for

Valuation of horse, $ 100

Valuation of horse equipments, $ 100

Remarks:

Book mark:

Laurens

(358) Copyist.

J. | 11 H. Art'y. | U.S.C.T.

Louis A Freeman

Corpl, Co. G, 11 Reg't U. S. Col'd H. Art'y.

Appears on

Company Muster Roll

for Dated Aug 31, 1865.

Present or absent Present

Stoppage, $ 100 for

Due Gov't, $ 100 for

Valuation of horse, $ 100

Valuation of horse equipments, $ 100

Remarks:

Book mark:

Louis A

(358) Copyist.

H | 11 H. Art'y. | U.S.C.T.

Lewis N Freeman

Corpl, Co. G, 11 Reg't U. S. Col'd H. Art'y.

Appears on **Co. Muster-out Roll,** dated New Orleans La, Oct 2, 1865.

Muster-out to date Oct 2, 1865.

Last paid to June 30, 1865.

Clothing account:

Last settled ....., 186 ; drawn since $ 100

Due soldier $ 3 17/100; due U. S. $ 100

Am't for cloth'g in kind or money adv'd $ 100

Due U. S. for arms, equipments, &c., $ 7 15/100

Bounty paid $ ..... 100; due $ 100 100

Remarks: Joined at Camp Morgan
was Paid to Aug 1864 Also
for Musket + Accouts rec'd
1 Canteen 1 Pr Scales

Book mark: .....

Lawrence

(861) *Copyist.*

Freeman Lewis H

....., Co. ....., 11 Reg't Mass

1 **Enclosures.**

Bed Cards	Final Statements
Burial Records	Furloughs or L. of A.
Certs. of Dis. for Discharge	Med. Certificates
C. M. Charges	Med. Des. Lists
Descriptive Lists	Orders
Discharge Certificates	Pris. of War Record
Enlistment Papers 1	Resignations

Other papers relating to—

Admission to Hosp'l	Furlough or L. of A.
Casualty Sheet	Med. Examination
Confinement	Misc. Information
Contracts	Pay or Clothing
Death or Effects	Personal Reports
Desertion	Rank
Discharge from Hosp'l	Transfer to Hosp'l
Discharge from Service	Transfer to V. R. C.
Duty	Transportation

DECLARATION OF RECRUIT.

I, Lewis H. Freeman desiring to VOLUNTEER as a Soldier in the *ARMY OF THE UNITED STATES*, for the term of 3 yrs do declare that I am 25 years and months of age; that I have never been discharged from the United States service on account of disability or by sentence of a court martial, or by order, before the expiration of a term of enlistment; and I know of no impediment to my serving honestly and faithfully as a soldier for three yrs

Given at Camp Ries

The 20 day of Aug 1863

Witness:

J M Addeman

Lewis H. Freeman

11 Aug 63

Lewis H. Freeman

Volunteered at Camp Ries Aug 20 1863.

By Lt Ingley

14 Regiment of Ky Cav

enlistment; last served in Company ( )

Reg't of

Discharged 18.

Jul 11 18

CONSENT IN CASE OF MINOR.

I, Do Certify that I am the of ; that the said is years of age; and I do hereby freely give my CONSENT to his volunteering as a SOLDIER in the ARMY OF THE UNITED STATES for the period of

Given at

The day of

Witness

VOLUNTEER ENLISTMENT.

State of

Town of

I, Lewis H. Freeman born in Auburn

in the State of New York aged 25 years, and by occupation

a barber DO HEREBY ACKNOWLEDGE to have volunteered this 30

day of Oct 1863 to serve as a SOLDIER in the ARMY OF THE UNITED STATES OF AMERICA, for the period of three yrs, unless sooner discharged by proper authority: Do also agree to accept such bounty, pay, rations and clothing, as are, or may be, established, by law for volunteers. And I, Lewis H. Freeman do solemnly swear, that I will bear true faith and allegiance to the *United States of America*, and that I will serve them honestly and faithfully against all their enemies or opposers whomsoever; and that I will observe and obey the orders of the President of the United States, and the orders of the officers appointed over me, according to the Rules and Articles of War.

Lewis H. Freeman

Sworn and Subscribed to, at Auburn

this 30 day of September 1863

BEFORE J. A. Hallagan Justice of the Peace

I CERTIFY, ON HONOR, That I have carefully examined the above-named Volunteer, agreeable to the General Regulations of the Army, and that, in my opinion, he is free from all bodily defects and mental infirmity, which would, in any way, disqualify him from performing the duties of a soldier.

John Landon Jr M D

EXAMINING SURGEON.

I CERTIFY, ON HONOR, That I have minutely inspected the Volunteer, Lewis H. Freeman previously to his enlistment, and that he was entirely sober when enlisted; that to the best of my judgment and belief, he is of lawful age; and that, in accepting him as duly qualified to perform the duties of an able-bodied soldier, I have strictly observed the Regulations which govern the recruiting service. This soldier has dark *eyes* dark *hair*, dark *complexion*, is four *feet*, 7½ *inches high*.

14 *Regiment of* H Arty *Volunteers*,

RECRUITING OFFICER.

MARC 12

U.S. Ord'd H. [illegible]

Female	Female

CARD NUMBERS.

1 6182195	26
2 6182341	27
3 6182493	28
4 6182712	29
5 6183770	30
6 9123807	31
7 9123958	32
8	33
9	34
10	35
11	36
12	37
13	38
14	39
15	40
16	41
17	42
18	43
19	44
20	45
21	46
22	47
23	48
24	49
25	50

Book Mark: _____

See also _____

I | 11 H. Art'y. | U.S.C.T.

Peter Freeman

, Co. A, 11 Reg't U. S. Col'd H. Art'y.

Appears on

Company Descriptive Book

of the organization named above.

DESCRIPTION.

Age 20 years; height 6 feet 0 inches.

Complexion Dark

Eyes Dk; hair Dk

Where born Washington D. C

Occupation Hackman

ENLISTMENT.

When Aug 3, 1863.

Where Providence

By whom W. H. Helme; term 3 y'rs.

Remarks: Descg'd by Surg-
eons certificate from
Portsmouth Grn R. I
Feby 25/64
Final statements Rend
April 6. 64

James

(3830) Copyist.

F | 11 H. Art'y. | U.S.C.T.

Peter Freeman

, Co. A, 11 Reg't U. S. Col'd H. Art'y.

Appears on

Company Descriptive Book

of the organization named above.

DESCRIPTION.

Age 20 years; height 6 feet 0 inches.

Complexion Dark

Eyes Dk; hair Dk

Where born Washington D. C.,

Occupation Hackman

ENLISTMENT.

When May 3, 1863.

Where Providence

By whom W H Helm; term 3 y'rs.

Remarks: Descharg'd by Surgeons Certificate from Portsmouth Grn Hospl R. I. Feby 25/64

James

Copyist.

F | 11 H. Art'y. | U.S.C.T.

Peter Fleeman

Pvt., Co. A, 14 Reg't R. I. Col'd H. Art'y.*

Age 20 years.

Appears on

Company Muster-in Roll

of the organization named above. Roll dated Camp Smith near Providence R.I., Aug 28, 1863.

Muster-in to date Aug 28, 1863.

Joined for duty and enrolled:

When July 3, 1863.

Where Providence

Period 3 years.

Valuation of horse, $ 100

Valuation of horse equipments, $ 100

Remarks: 1st District

* This organization subsequently became Co. A, 11 Reg't U. S. Colored Heavy Artillery.

Book mark:

Prewitt

Copyist.

H | 11 H. Art'y. | U.S.C.T.

Peter Freeman

Pvt., Co. A, 14 Reg't R. I. Col'd H. Art'y.*

Appears on

Company Muster Roll

for Aug 28 to Dec 31, 1863.

Present or absent Absent

Stoppage, $ ..... 100 for .....

Due Gov't, $ ..... 100 for .....

Valuation of horse, $ 100

Valuation of horse equipments, $ 100

Remarks: In Hospital at Portsmouth Grove R. I.

* This organization subsequently became Co. A, 11 Reg't U. S. Colored Heavy Artillery.

Book mark: .....

Prewitt

(358) Copyist.

11 H. Art'y. | U.S.C.T.

Peter Freeman

Pvt., Co. A, 14 Reg't R. I. Col'd H. Art'y.*

Appears on

Company Muster Roll

for Jan & Feb, 1864.

Present or absent Absent

Stoppage, $ 100 for

Due Gov't, $ 100 for

Valuation of horse, $ 100

Valuation of horse equipments, $ 100

Remarks: In Hospital at Portsmouth Grove R. I.

*This organization subsequently became Co. A, 11 Reg't U. S. Colored Heavy Artillery.

Book mark:

Prentiss

(358) Copyist.

F | 11 H. Art'y. | U.S.C.T.

Peter Freeman

Pvt., Co. A, 14 Reg't R. I. Col'd H. Art'y.*

Appears on

Company Muster Roll

for Mch & Apl, 1864.

Present or absent.....

Stoppage, $.....100 for .....

.....

Due Gov't, $.....100 for .....

.....

Valuation of horse, $.....100

Valuation of horse equipments, $.....100

Remarks: Discharged from Portsmouth Grove R.I. Feb 25. 1864 Surgeons Certificate.

.....

.....

.....

.....

*This organization subsequently became Co. A, 11 Reg't U. S. Colored Heavy Artillery.

Book mark:.....

Prewitt

(358) Copyist.

B 11 | **11 H. Art'y.** | **U.S.C.T.**

Peter Freeman,

Priv., Co. A, 11 Reg't U. S. Col'd H. Art'y.

Appears on **Co. Muster-out Roll,** dated

New Orleans, La., Oct. 2, 186 5.

Muster-out to date ....., 186 .

Last paid to ....., 186 .

Clothing account:

Last settled....., 186 ; drawn since $.....100

Due soldier $.....100; due U. S. $.....100

Am't for cloth'g in kind or money adv'd $.....100

Due U. S. for arms, equipments, &c., $ 100

Bounty paid $.....100; due $.....100

Remarks: Joined Regt. Regts.
Discharged Feb. 25/64 By Order Maj. Genl. Dix, Fortress Monroe Grss, R. I., for disability.

Book mark :

R M Freeman.

(361) *Copyist.*

Freeman, Peter

P, Co. A., 11 Reg't U.S.C.H.A.

Enclosures.

Bed Cards	Descriptive Lists
Burial Records	Final Statements
Certs. of Dis. for Discharge 1	Furloughs
C. M. Charges	Med. Des. Lists
Med. Certificates	Orders

E.P. 1

Other papers relating to—

Admission to Hosp'l	Furlough
Casualty Sheet (Officer's) /	Med. Examination
Confinement	Misc. Information
Contracts	Pay or Clothing
Death or Effects	Personal Reports
Desertions	Rank
Discharge from Hosp'l	Transfer to Hosp'l
Discharge from Service /	Transfer to V. R. C.
Duty	Transportation

11 U. S. C. H. A.

HEAD-QUARTERS, DEPARTMENT OF THE EAST.

New York City, March 7 1864.

To

Commanding Officer,

Co. A 14th U.S. Col'd Hy Artly

You are hereby notified that

Private
Peter Fasenaud

of your Company and Regiment has been discharged the service of the U. S., by reason of

Disability

at Portsmouth Grove R.I.

on the 21 day of Feby

1864, by orders from these Headquarters.

BY COMMAND OF MAJOR-GENERAL DIX.

Wilson Burton

Assistant Adjutant General.

Thro. Regt. Hd. Qrs.

DECLARATION OF RECRUIT.

I, Peter Freeman desiring to VOLUNTEER as a Soldier in the *ARMY OF THE UNITED STATES*, for the term of three years, do declare that I am 20 years and 3 months of age; that I have never been discharged from the United States service on account of disability or by sentence of a court martial, or by order, before the expiration of a term of enlistment; and I know of no impediment to my serving honestly and faithfully as a soldier for the 1st Regt Col. Cavn. Heavy Artillery.

Given at Providence
The 3rd day of August 1863.

Witness:
Wm H Hehre

his
Peter X Freeman
mark

No. 5 4

Peter Freeman

Volunteered at

By

1/ Regiment of Hvy Artillery

enlistment; last served in Company ( )

Reg't of

Discharged 18

Jul 11 1871

CONSENT IN CASE OF MINOR.

I, Do CERTIFY that I am the
of ; that the said
is years of age; and I do hereby freely give
my CONSENT to his volunteering as a SOLDIER in the ARMY OF THE UNITED STATES for the period of

Given at
The day of

Witness:

Peter Freeman is a fugitive Slave and has no responsible Guardian
Wm H Hehre

VOLUNTEER ENLISTMENT.

State of Rhode Island Town of Providence

I, Peter Freeman born in Washington
~~in the State of~~ District of Columbia aged 20 years, and by occupation
a Hackman DO HEREBY ACKNOWLEDGE to have volunteered this 30
day of August 1863, to serve as a SOLDIER in the ARMY OF THE UNITED STATES
of AMERICA, for the period of three years, unless sooner discharged by proper authority:
Do also agree to accept such bounty, pay, rations and clothing, as are, or may be, established by law for volunteers. And I, Peter Freeman do solemnly swear, that I will bear true faith and allegiance to the *United States of America*, and that I will serve them honestly and faithfully against all their enemies or opposers whomsoever; and that I will observe and obey the orders of the President of the United States, and the orders of the officers appointed over me, according to the Rules and Articles of War.

Sworn and subscribed to, at Providence
this 3rd day of August 1863
BEFORE Gra Parkis Justice of the Peace

his
Peter X Freeman
mark

I CERTIFY, ON HONOR, That I have carefully examined the above-named Volunteer, agreeably to the General Regulations of the Army, and that, in my opinion, he is free from all bodily defects and mental infirmity, which would, in any way, disqualify him from performing the duties of a soldier.

Johnson Sanders M.D.

EXAMINING SURGEON.

I CERTIFY, ON HONOR, That I have minutely inspected the Volunteer,
previously to his enlistment, and that he was entirely sober when enlisted; that, to the best of my judgment and belief, he is of lawful age; and that, in accepting him as duly qualified to perform the duties of an able-bodied soldier, I have strictly observed the Regulations which govern the recruiting service. This soldier has *eyes*, *hair*, *complexion*, is *feet*, *inches high*.

Regiment of *Volunteers*,

Wm H. Hehne

RECRUITING OFFICER.

12

CASUALTY SHEET

No. .....

Peter Freeman
Priv. of Company A
14 Regiment of R. I. H. A

State Volunteers.

NATURE OF CASUALTY.

Wounded July 25/64

RECEIVED-OFFICE
JUN
7
1869
ADJUTANT GEN'L'S

CASUALTY SHEET.

Name: Peter Freeman

Rank: Priv *Company:* A *Regiment:* 14

Arm: Ho. A. *State:* R. I.

Nature of Casualty: Disch'g

CAUSE OF CASUALTY—(NAME OF DISEASE, &C.)

DEGREE OF DISABILITY.

BY WHOM CERTIFIED

W. F. Derrick
Surgeon

DATE OF DISCHARGE, DEATH, &c.

Febry. 25. 1864

PLACE OF DISCHARGE, DEATH, &c.

Portsmouth Gr. P.

BY WHOM DISCHARGED.

FROM WHAT SOURCE THIS INFORMATION WAS OBTAINED.

Roll of Invalid Hos
R. I. 1864

REMARKS.

D. D. Rogers

Clerk.

(170)

2222

NOTE 1.

The company commander will here add a statement of all the *facts* known to him concerning the disease or wound, or cause of disability of the soldier; the time, place, manner, and all the circumstances under which the injury occurred, or disease originated or appeared; the duty, or service, or situation of the soldier at the time the injury was received or disease contracted, stating particularly whether the injury was received or the disease contracted in the line of his duty; and whatever other facts may aid a judgment as to the cause, immediate or remote, of the disability, and the circumstances attending it.

When the *facts* are not known to the company commander, the certificate of any officer, or affidavit of other person having such knowledge, will be appended—as the surgeon in charge of a hospital, the officer commanding a detachment of recruits, &c., &c.

NOTE 2.

When a *probable* case for *pension, special care* must be taken to state the *degree* of disability—as ½, ⅓, &c., &c.; to describe particularly the disability, wound, or disease; the extent to which it deprives him of the use of any limb or faculty, or affects his health, strength, activity, constitution, or capacity to labor or earn his subsistence. The surgeon will add, from his knowledge of the facts and circumstances, and from the evidence in the case, his professional opinion of the cause or origin of the disability. In the case of discharges by Medical Inspectors, the last paragraph will state that the "discharge was given by consent of the soldier, after a personal examination, and for disability, the nature, degree, and origin of which are correctly described in the within certificate."

Par. 1260 Regulations, Edit. 1861.

Medical officers, in giving certificates of disability, are to take particular care in all cases that have not been under their charge; and especially in epilepsy, convulsions, chronic rheumatism, derangement of the urinary organs, ophthalmia, ulcers, or any obscure disease liable to be feined or purposely produced; and in no case shall such certificate be given until after sufficient time and examination to detect any attempt at deception.

DIRECTIONS.

This certificate will be made out in *duplicate* by the soldier's company commander, or other officer commanding the separate detachment to which he belongs and sent by him to the surgeon who has charge of the hospital where the soldier is sick. The surgeon will then fill out and sign the surgeon's certificate, and forward these papers to the regimental, detachment, or post commander, who will forward them, with his action endorsed thereon, through the proper channel, to his division commander; or, if the troops are not attached to a division, to his corps, department, or other commander or officer to whom the authority to discharge enlisted men may be specially delegated.

These certificates, after having received the action of the highest authority to which they are required to be sent, will be returned through the same channel to the regimental, post, or detachment, commander, who will, if the discharge is authorized by the endorsement of the proper authority, sign the soldier's discharge, and the last certificate on this paper; see that the soldier is furnished with the proper final statements in duplicate, and forward BOTH of these certificates *direct* to the Adjutant General United States Army, at Washington, D. C.; they will not under any circumstances be given into the hands of the soldier.

13

CERTIFICATE OF DISABILITY FOR DISCHARGE

No. 29 IN THE CASE OF

Peter Freeman

a Private Co. A.

14th Reg't of R.I. Vols.

11th No. 8.

APPROVED

C. W. Bourgeé

Surgeon, U. S. A.,

Medical Director Dep't of the East.

Med. Res. Dept. of the East

New York City, Feby. 21st 1864.

To be discharged.

By comd. of Maj. Gen. Dix

Chas. Temple Dix.

Maj. & A. D. C.

A. A. A. G.

Received (A. G. Office) ....., 186 .

Enton 0 Rof Cas

Adjutant General's Office,

Mar 5 1864

Duplicate sent the Pension Office

ARMY OF THE UNITED STATES.

CERTIFICATE OF DISABILITY FOR DISCHARGE.

Private Peter Freeman of ~~Captain~~ 2nd. Lieut Charles P. Gay's Company, (A) of the Fourteenth Colored Regiment of United States H. Arty. R. I. Vols. was enlisted by W. H. Helms of the ____ Regiment of ____ at Providence R. I. on the 28th. day of August 1863, to serve 3 years; he was born in Washington ~~in the State of~~ D. C. is Twenty years of age, Five feet Ten inches high, Dark complexion, Dark eyes, Dark hair, and by occupation when enlisted a Hackman During the last two months said soldier has been unfit for duty Sixty days.* ~~Unfit for Invalid Co. &~~

STATION: Portsmouth Grove R. I.
DATE: February 8th 1864.

W. W. Comick
Asst. Surgeon U. S. A.
Commanding ~~Company~~. Hospital pro-tem.

I CERTIFY, that I have carefully examined the said Peter Freeman of ~~Captain~~ 2nd. Lieut Charles P. Gay's Company, and find him incapable of performing the duties of a soldier because of† Phthisis-Pulmonalis- Contracted Since enlistment- Has done no duty for three Months. Will be able to earn a Small Subsistence, Disability one 1/2 half- Unfit for Invalid Corps-

W. W. Comick
Asst. Surgeon. U. S. A.

DISCHARGED, this Twenty-fifth day of February 1864, at Lovell General Hospital U. S. A. Portsmouth Grove R.I.

W. W. Comick
Asst. Surg. U. S. A.
Commanding the ~~Reg't.~~ Hosp. pro-tem.

The *soldier* desires to be *addressed* at
Town Providence County ____ State Rhode Island

* See Note 1 on the back of this. †See Note 2 on the back of this.

[A. G. O. No. 100 & 101—First.] (DUPLICATES.)

U. S. Coll...

CARD NUMBERS.

1	9123962	26	
2		27	
3		28	
4		29	
5		30	
6		31	
7		32	
8		33	
9		34	
10		35	
11		36	
12		37	
13		38	
14		39	
15		40	
16		41	
17		42	
18		43	
19		44	
20		45	
21		46	
22		47	
23		48	
24		49	
25		50	

Number of personal papers herein

Book Mark

Ff | 11 H. Art'y. | U.S.C.T.

× Robert O. Freeman.

....., Co. A, 11 Reg't U. S. Col'd H. Art'y.

Appears on

Company Descriptive Book

of the organization named above.

DESCRIPTION.

Age 19 years; height 4 feet 11 3/4 inches.

Complexion African

Eyes Blk; hair Blk

Where born Providence R. I.

Occupation Sailer

ENLISTMENT.

When Aug 3, 1863.

Where Providence

By whom W H Helme; term 3 y'rs.

Remarks: Rejected at muster by capt Selvey.

× Entire entry canceled on book except remark.

James

(3830) *Copyist.*

Barnes, J.

Co ____, 11 U.S.Col'd H.Art'y.

Private	Private

CARD NUMBERS.

1	6224429	26	
2	6181368	27	
3	6181424	28	
4	6181702	29	
5	6224248	30	
6		31	
7		32	
8		33	
9		34	
10		35	
11		36	
12		37	
13		38	
14		39	
15		40	
16		41	
17		42	
18		43	
19		44	
20		45	
21		46	
22		47	
23		48	
24		49	
25		50	

Book Mark:

See also

F | 14 H. Art'y. | U.S.C.T.

Thomas Freeman

Appears with rank of Corpl. on

Muster and Descriptive Roll of a Detachment of U. S. Vols. forwarded

for the 14 Reg't Md. C. H.A. Roll dated

Portland, Me., March 8, 1865.

Where born New York, N. Y.

Age 22 y'rs; occupation Ostler

When enlisted March 8, 186—.

Where enlisted Portland, Me.

For what period enlisted 3 years.

Eyes black; hair black

Complexion Colr; height 5 ft. 5½ in.

When mustered in March 8, 186—.

Where mustered in Portland Me

Bounty paid $ 100; due $ 100

Where credited

Company to which assigned

Remarks: For 14th R. I. H. Artillery Inelia of North Yarmouth, 1st Dist. Me — Entitled to Bounty.

Book mark:

Grogan

(339) Copyist.

F | **11 H. Art'y.** | **U.S.C.T.**

Thomas Freeman

Appears with rank of Pvt on

Muster and Descriptive Roll of a Detachment of U. S. Vols. forwarded

for the 11 Reg't Me Art'y. Roll dated

Portland Me, March, 1865.

Where born New York NY.

Age 22 y'rs; occupation Laborer

When enlisted March, 186 .

Where enlisted Portland Me

For what period enlisted 3 years.

Eyes Blk; hair Blk

Complexion Dark; height 5 ft. 3 in.

When mustered in March, 186 .

Where mustered in Portland

Bounty paid $ 100; due $ 300 100

Where credited North Yarmouth Co.
Cumberland 1st Dist Maine

Company to which assigned

Remarks Entitled to bounty
for 14 R. I. Hy. Artly -

Book mark:

Allen

(339) Copyist.

F. | 14 H. Art'y. | U.S.C.T.

Thomas Freeman

Appears with rank of Priv. on

Muster and Descriptive Roll of a Detachment of U. S. Vols. forwarded

for the 14 Reg't U.S.C.H.A. Roll dated

Portland, Me., April 6, 1865.

Where born New York, N.Y.

Age 22 y'rs; occupation Ostler

When enlisted March 8, 1865.

Where enlisted Portland, Me.

For what period enlisted 3 years.

Eyes black; hair black

Complexion dark; height 5 ft. 5½ in.

When mustered in March 8, 1865.

Where mustered in 1 Comp. Dl.

Bounty paid $100 00; due $200 00

Where credited 1 Dt. Nr Yarmouth, Me.

Company to which assigned

Remarks:

~~Name not taken up on muster rolls of Regt~~

Book mark:

Brogan

(339) *Copyist.*

F | 11 H. Art'y. | U.S.C.T.

Thomas Freeman

Appears with rank of Pvt on

Muster and Descriptive Roll of a Detachment of U. S. Vols. forwarded

for the 11 Reg't (14 R.I. Col. H. Art'y) 2d C. H. Art'y Roll dated

Portland Me, Apl 6, 1865.

Where born New York N. Y.

Age 22 y'rs; occupation Waiter

When enlisted March, 1865.

Where enlisted Portland Me

For what period enlisted 3 years.

Eyes Blk; hair Blk

Complexion Col'd.; height 5 ft. 5½ in.

When mustered in March, 1865.

Where mustered in Augs. Dist.

Bounty paid $100 00; due $200 00

Where credited to Garrison Augs. Co. Maine Dist

Company to which assigned

Remarks:

Book mark:

Copyist.

F | 11 Hdq | U.S.C.T.

Thomas Freeman

Pri, Co. ——, 11 Reg't U. S. Col'd Hdq

Appears on a

Detachment Muster-out Roll

of the organization named above. Roll dated Gallops Isld Bft mass, May 10, 1865.

Muster-out to date May 10, 1865.

Last paid to Pay due from enlistment, 186

Clothing account:

Last settled ——, 186 ; drawn since $ —— 100

Due soldier $ —— 100; due U. S. $ 23 67/100

Am't for cloth'g in kind or money adv'd $ —— 100

Due U. S. for arms, equipments, &c., $ —— 100

Bounty paid $ —— 100 due $ 100 100

Remarks:

Name not taken upon Co. M. rolls of Regt

Book mark:

Donnelly

(349) *Copyist.*

Freeman Thomas

C, Co. B, 11 Reg't Mass Vol

2 Enclosures.

Bed Cards	Final Statements
Burial Records	Furloughs or L. of A.
Certs. of Dis. for Discharge	Med. Certificates
C. M. Charges	Med. Des. Lists
Descriptive Lists	Orders
Discharge Certificates	Pris. of War Record
Enlistment Papers /	Resignations

Other papers relating to—

Admission to Hosp'l	Furlough or L. of A.
Casualty Sheet /	Med. Examination
Confinement	Misc. Information
Contracts	Pay or Clothing
Death or Effects	Personal Reports
Desertion	Rank
Discharge from Hosp'l	Transfer to Hosp'l
Discharge from Service	Transfer to V. R. C.
Duty	Transportation

NOTE 1.—This blank will be used for both enlistments and re-enlistments—enlistment of veterans, &c., in the volunteer service. They will be made out in duplicate in all cases—one to accompany the recruiting return of the superintendent (not the recruiting officer) to the Adjutant General, and one to accompany the accounts of the officer who pays bounty, &c. The Regiment and Company in which the soldier last served should be given on the back.

NOTE 2.—An enlistment holds to service. A muster-in must, in all cases, precede payment of pay, bounty, pension, &c. A muster-in roll must, in all cases, be filed in the Adjutant General's Office as evidence of muster-in. The mustering officer, commissary, or assistant commissary of musters, as the case may be, will countersign both enlistments as having mustered the soldier into the service of the United States before either of them is given to the disbursing officer.

DECLARATION OF RECRUIT.

I, Thomas Freeman, desiring to VOLUNTEER as a Soldier in the Army of the United States, for the term of THREE YEARS, Do Declare, That I am Twenty two years and six months of age; that I have never been discharged from the United States service on account of disability or by sentence of a court martial, or by order before the expiration of a term of enlistment; and I know of no impediment to my serving honestly and faithfully as a soldier for three years.

GIVEN at Patterson

the 8th day of March 1865

Witness:

Wm. McDonald

Thomas Freeman

No. 1424

Thomas Freeman

Volunteered at Patterson

March 8 1865,

By Capt. McDougall

Regiment of Sharpshooters,

1 Dist Nav

enlistment; last served in Company ( )

Reg't of

Discharged 18 .

11 MS C Hdqrs

CONSENT IN CASE OF MINOR.

I, ..., DO CERTIFY, That I am the ..... of .....; that the said ..... is ..... years of age; and I do hereby freely give my CONSENT to his volunteering as a SOLDIER in the ARMY OF THE UNITED STATES for the period of THREE YEARS.

GIVEN at .....

the ..... day of .....

Witness:

.....

.....

(A. G. O. No. 74 & 76.)

Town of North Yarmouth

VOLUNTEER ENLISTMENT.

STATE OF Maine TOWN OF Portland

I, Thomas Freeman, born in New York, in the State of New York, aged Twenty two years, and by occupation a Seaman, Do HEREBY ACKNOWLEDGE to have volunteered this Eight day of March, 1865, to serve as a ***Soldier*** in the **Army of the United States of America,** for the period of *THREE YEARS*, unless sooner discharged by proper authority: Do also agree to accept such bounty, pay, rations, and clothing, as are, or may be, established by law for volunteers. And I Thomas Freeman, do solemnly swear, that I will bear true faith and allegiance to the ***United States of America,*** and that I will serve them honestly and faithfully against all their enemies or opposers whomsoever; and that I will observe and obey the orders of the President of the United States, and the orders of the officers appointed over me, according to the Rules and Articles of War.

Sworn and subscribed to, at Portland
this 8 day of March, 1865,
BEFORE Charles H Doughty

Thomas Freeman

I CERTIFY, ON HONOR, That I have carefully examined the above-named Volunteer, agreeably to the General Regulations of the Army, and that, in my opinion, he is free from all bodily defects and mental infirmity, which would in any way disqualify him from performing the duties of a soldier.

Chas Thomas
EXAMINING SURGEON.

I CERTIFY, ON HONOR, That I have minutely inspected the Volunteer ..... previously to his enlistment, and that he was entirely sober when enlisted; that, to the best of my judgment and belief, he is of lawful age; and that, in accepting him as duly qualified to perform the duties of an able-bodied soldier, I have strictly observed the Regulations which govern the recruiting service. This soldier has Blk *eyes,* Blk *hair,* Colo *complexion,* is 5 *feet* 3 *inches* high.

(A. G. O. No. 74 & 76.)

11 Regiment of R. I. Artillery Volunteers,
Charles H Doughty
RECRUITING OFFICER.

Mustered into the service of the United States, for three years or during the war, from date of enlistment, in Co. [illegible] 11 Regiment of R. I. Artillery Volunteers, on the 8 day of March, 1865, at Portland
Charles H Doughty
Capt. Co. B
1 Div 9 Corps

13

CASUALTY SHEET

No. .....

[illegible]

[illegible] of Company .....

14 Regiment of [illegible]

State Volunteers.

NATURE OF CASUALTY.

[illegible]

RECEIVED-SECTION
Nov
10
1868

CASUALTY SHEET.

Name: [illegible]

Rank: Pvt *Company:* — *Regiment:* 11

Arm: Inf *State:* Ohio

Nature of Casualty: Wd Ear

CAUSE OF CASUALTY—(NAME OF DISEASE, &C.)

GSW head

DEGREE OF DISABILITY.

BY WHOM CERTIFIED.

DATE OF DISCHARGE, DEATH, &c.

May 13 1865

PLACE OF DISCHARGE, DEATH, &c.

Louisville Ky

BY WHOM DISCHARGED.

FROM WHAT SOURCE THIS INFORMATION WAS OBTAINED.

Roll No 6 Regt Ohio Inf

Louisville Ky

REMARKS.

A Bates

Clerk.

(170)

U.S. Col'd H.A.

Female | Cirfonal

CARD NUMBERS.

1	6192509	26	
2	6192667	27	
3	6192813	28	
4	6192961	29	
5	6193099	30	
6	6193207	31	
7	6193343	32	
8	6193472	33	
9	6193600	34	
10	6193728	35	
11	6193858	36	
12	6193985	37	
13	6194113	38	
14	9125179	39	
15		40	
16		41	
17		42	
18		43	
19		44	
20		45	
21		46	
22		47	
23		48	
24		49	
25		50	

Book Mark:

See also

S. 806030 Poage

J. D. Mark Co.

F | 11 H. Art'y. | U.S.C.T.

William L. G. Freman

, Co. G, 11 Reg't U. S. Col'd H. Art'y.

Appears on

Company Descriptive Book

of the organization named above.

DESCRIPTION.

Age 37 years; height 5 feet 6½ inches.

Complexion Dark.

Eyes Black; hair Dark.

Where born Stanton Co., New York.

Occupation Barber.

ENLISTMENT.

When Oct. 4, 1863.

Where Prov., R. I.

By whom J. C. Engley; term 3 y'rs.

Remarks: Promoted from private to be Corpl. Aug. 15, 1864.

"11

O. J. Markle,
Copyist.

(383y)

F. | 11 H. Art'y. | U.S.C.T.

William G. Freeman

Pvt., Co. G, 14 Reg't R. I. Col'd H. Art'y.*

Age 37 years.

Appears on

Company Muster-in Roll

of the organization named above. Roll dated Providence, R. I., Nov. 4, 1863.

Muster-in to date Nov. 4, 1863.

Joined for duty and enrolled:

When Oct. 2, 1863.

Where Prov R. I.

Period 3 years.

Valuation of horse, $ 100

Valuation of horse equipments, $ 100

Remarks:

* This organization subsequently became Co. G, 11 Reg't U. S. Colored Heavy Artillery.

Book mark:

Ramsey

Copyist.

F. | 11 H. Art'y. | U.S.C.T.

William L. G. Freeman*

Pvt., Co. G, 14 Reg't R. I. Col'd H. Art'y.*

Appears on

Company Muster Roll

for Nov 4 to Dec. 31, 186 3.

Present or absent Present.

Stoppage, $ 100 for

Due Gov't, $ 100 for

Valuation of horse, $ 100

Valuation of horse equipments, $ 100

Remarks:

*Name appears in column of names Present as William L. G. Freeman.

* This organization subsequently became Co. G, 11 Reg't U. S. Colored Heavy Artillery.

Book mark:

Copyist.

F. | 11 H. Art'y. | U.S.C.T.

William L. G. Freeman

Pvt, Co. G, 14 Reg't R. I. Col'd H. Art'y.*

Appears on

Company Muster Roll

for Jan & Feb., 1864.

Present or absent Present.

Stoppage, $ 100 for

Due Gov't, $ 100 for

Valuation of horse, $ 100

Valuation of horse equipments, $ 100

Remarks:

* This organization subsequently became Co. G, 11 Reg't U. S. Colored Heavy Artillery.

Book mark:

Ramsey

(358) Copyist.

F. | 11 H. Art'y. | U.S.C.T.

William L. G. Freeman

Pvt, Co. G, 14 Reg't R. I. Col'd H. Art'y.*

Appears on

Company Muster Roll

for Mar & Apr, 1864.

Present or absent Present.

Stoppage, $ 100 for

Due Gov't, $ 100 for

Valuation of horse, $ 100

Valuation of horse equipments, $ 100

Remarks:

* This organization subsequently became Co. G, 11 Reg't U. S. Colored Heavy Artillery.

Book mark:

Ramsey

(358) *Copyist.*

F. | **11 H. Art'y.** | **U.S.C.T.**

William L. G. Freeman

Pvt, Co. G, 8 Reg't U. S. Col'd H. Art'y.*

Appears on

Company Muster Roll

for May & June, 1864.

Present or absent Present.

Stoppage, $ 100 for

Due Gov't, $ 100 for

Valuation of horse, $ 100

Valuation of horse equipments, $ 100

Remarks:

† This organization subsequently became Co. G, 11 Reg't U. S. Colored Heavy Artillery.

Book mark:

Ramsey

Copyist.

F. | 11 H. Art'y. | U.S.C.T.

William L. G. Freeman.

Corpl, Co. G, 11 Reg't U. S. Col'd H. Art'y.

Appears on

Company Muster Roll

for July & Aug., 1864.

Present or absent Present.

Stoppage, $ 100 for

Due Gov't, $ 100 for

Valuation of horse, $ 100

Valuation of horse equipments, $ 100

Remarks: Disch't. Corpl Aug. 15, 1864.

Book mark:

Sitter.

Copyist.

F. | 11 H. Art'y. | U.S.C.T.

William L. G. Freeman.

Corp'l, Co. G, 11 Reg't U. S. Col'd H. Art'y.

Appears on

Company Muster Roll

for Sept. & Oct., 1864.

Present or absent Present.

Stoppage, $ 100 for

Due Gov't, $ 100 for

Valuation of horse, $ 100

Valuation of horse equipments, $ 100

Remarks: Free Apr. 19/61.
Apt'd Corp'l Aug. 15, '64.

Book mark:

Sitter.

F. | 11 H. Art'y. | U.S.C.T.

William L. G. Freeman.

Corpl, Co. G, 11 Reg't U. S. Col'd H. Art'y.

Appears on

Company Muster Roll

for Nov. & Dec., 1864.

Present or absent Present.

Stoppage, $ 100 for

Due Gov't, $ 100 for

Valuation of horse, $ 100

Valuation of horse equipments, $ 100

Remarks: Appointed Corpl Aug. 15, 1864.
Stop for 1 Haversack .67

Book mark :

Sitter.

(358) *Copyist.*

E 4 | **11 H. Art'y.** | **U.S.C.T.**

William L. G. Freeman.

Corpl Co. G, 11 Reg't U. S. Col'd H. Art'y.

Appears on

Company Muster Roll

for Jan. & Feb., 1865.

Present or absent Present.

Stoppage, $ 100 for

Due Gov't, $ 100 for

Valuation of horse, $ 100

Valuation of horse equipments, $ 100

Remarks: Stop for 1 Haversack .67

Book mark:

Sitler.

(358) Copyist.

F. | **11 H. Art'y.** | **U.S.C.T.**

William L. G. Freeman.

Corp'l, Co. G, 11 Reg't U. S. Col'd H. Art'y.

Appears on

Company Muster Roll

for Mar. & Apr., 1865.

Present or absent Present.

Stoppage, $ 100 for

Due Gov't, $ 100 for

Valuation of horse, $ 100

Valuation of horse equipments, $ 100

Remarks: Stop for 1 Haversack 67

Book mark:

Sitter.

(358) *Copyist.*

J. | 11 H. Art'y. | U.S.C.T.

William L G Freeman

Corpl, Co. G, 11 Reg't U. S. Col'd H. Art'y.

Appears on

Company Muster Roll

for May & June, 186 5.

Present or absent Present

Stoppage, $ 100 for

Due Gov't, $ 100 for

Valuation of horse, $ 100

Valuation of horse equipments, $ 100

Remarks:

Book mark:

Laurence

(358) Copyist.

G. | 11 H. Art'y. | U.S.C.T.

Wallace L G Freeman

Corpl, Co. G, 11 Reg't U. S. Col'd H. Art'y.

Appears on

Company Muster Roll

for Dated Aug 31, 1865.

Present or absent Present

Stoppage, $ 100 for

Due Gov't, $ 100 for

Valuation of horse, $ 100

Valuation of horse equipments, $ 100

Remarks:

Book mark:

Freeman

(358) Copyist.

G | 11 H. Art'y. | U.S.C.T.

William L G Brennan

Corpl, Co. G, 11 Reg't U. S. Col'd H. Art'y.

Appears on **Co. Muster-out Roll,** dated New Orleans La Oct 2, 186 5 .

Muster-out to date Oct 2, 186 5 .

Last paid to June 30, 186 5 .

Clothing account:

Last settled ....., 186 ; drawn since $ 100

Due soldier $ 42 59/100 ; due U. S. $ 100

Am't for cloth'g in kind or money adv'd $ 100

Due U. S. for arms, equipments, &c., $ 36/100

Bounty paid $ ..... 100 ; due $ 100 100

Remarks: Joined at Dept Organ
was Put to Aug 15/64
Musk for 1 wiper 1 Screw driver
1 Spare Cone

Book mark : .....

Lawrence

(361) *Copyist.*

Co B, 11 U.S.Col'd H. Art'y.

Private	Private

CARD NUMBERS.

1	6183883	26	
2	6184027	27	
3	6184174	28	
4	6184317	29	
5	6184456	30	
6	6184592	31	
7	6184721	32	
8	6184848	33	
9	6184964	34	
10	6185079	35	
11	6185248	36	
12	6185470	37	
13	9124132	38	
14	9124273	39	
15		40	
16		41	
17		42	
18		43	
19		44	
20		45	
21		46	
22		47	
23		48	
24		49	
25		50	

Book Mark: CB-11-304.

See also

F | 11 H. Art'y. | U.S.C.T.

John Frisby

, Co. B, 11 Reg't U. S. Col'd H. Art'y.

Appears on

Company Descriptive Book

of the organization named above.

DESCRIPTION.

Age 21 years; height 5 feet 9 inches.

Complexion Dark

Eyes Blk; hair Blk

Where born Little Rock. Ark

Occupation Laborer

ENLISTMENT.

When Aug 24, 1863.

Where Brov. R. I.

By whom Maj Sanford; term 3 y'rs.

Remarks: Descharg'd at Brazos Santiago Texas May 1865 by reason of physical disability occasioned by being ruptured while serving on a heavy piece at Fort Jackson La. Discharged by order of Maj Gen Banks at Brazos City Texas

James

(383g) Copyist.

C 4 | **11 H. Art'y.** | **U.S.C.T.**

John C Irisby

_____, Co. B, 11 Reg't U. S. Col'd H. Art'y.

Appears on

Company Descriptive Book

of the organization named above.

DESCRIPTION.

Age 21 years; height 5 feet 9 inches.

Complexion Dk

Eyes Blk; hair Blk

Where born Little York Pa

Occupation Saloon

ENLISTMENT.

When Aug 24, 186 .

Where Providence

By whom Maj' Sanford, term 3 y'rs.

Remarks:

Adams

(3830) *Copyist.*

K | 11 H. Art'y. | U.S.C.T.

John Frisby

Pvt., Co. B, 14 Reg't R. I. Col'd H. Art'y.*

Age 21 years.

Appears on

Company Muster-in Roll

of the organization named above. Roll dated Providence R I Sept 14, 1863.

Muster-in to date Sept 14, 1863.

Joined for duty and enrolled:

When Aug. 24, 186°.

Where Providence

Period 3 years.

Valuation of horse, $ 100

Valuation of horse equipments, $ 100

Remarks:

* This organization subsequently became Co B, 11 Reg't U. S. Colored Heavy Artillery.

Book mark:

J. Walker

H | 11 H. Art'y. | U.S.C.T.

John Frusly

Pvt., Co. B, 14 Reg't R. I. Col'd H. Art'y.*

Appears on

Company Muster Roll

for Sept 14 to Dec 31, 1863.

Present or absent Present

Stoppage, $.....100 for .....

.....

.....

Due Gov't, $.....100 for .....

.....

Valuation of horse, $.....100

Valuation of horse equipments, $.....100

Remarks:.....

.....

.....

.....

.....

.....

.....

*This organization subsequently became Co. B, 11 Reg't U. S. Colored Heavy Artillery.

Book mark: .....

J. Walker

(358) *Copyist.*

H. | 11 H. Art'y. | U.S.C.T.

Pvt John Insby

....., Co. B, 14 Reg't R. I. Col'd H. Art'y.*

Appears on

Company Muster Roll

for Jan & Feb, 1864.

Present or absent Present

Stoppage, $ 100 for .....

.....

Due Gov't, $ 100 for .....

.....

Valuation of horse, $ 100

Valuation of horse equipments, $ 100

Remarks: .....

.....

.....

.....

.....

.....

.....

*This organization subsequently became Co. B, 11 Reg't U. S. Colored Heavy Artillery.

Book mark: .....

T. Walker

(358) Copyist.

J | 11 H. Art'y. | U.S.C.T.

John Insby

Pvt., Co. B, 8 Reg't U. S. C'd H. Art'y.*

Appears on

Company Muster Roll

for Mch & Apl, 1864

Present or absent Present

Stoppage, $ 100 for

Due Gov't, $ 100 for

Valuation of horse, $ 100

Valuation of horse equipments, $ 100

Remarks:

† This organization subsequently became Co. B, 11 Reg't U. S. Colored Heavy Artillery.

Book mark:

J. Walker

Copyist.

37 | 11 H. Art'y. | U.S.C.T.

John Irisby

Pvt., Co B, 8 Reg't U. S. Col'd H. Art'y.*

Appears on

Company Muster Roll

for May & June, 1864

Present or absent Present

Stoppage, $ 100 for

Due Gov't, $ 100 for

Valuation of horse, $ 100

Valuation of horse equipments, $ 100

Remarks:

† This organization subsequently became Co. B, 11 Reg't U. S. Colored Heavy Artillery.

Book mark:

J. Walker

Copyist.

F | 11 H. Art'y. | U.S.C.T.

John Fraby

Pri., Co. B, 11 Reg't U. S. Col'd H. Art'y.

Appears on

Company Muster Roll

for July & Aug, 1864.

Present or absent Present

Stoppage, $ 100 for

Due Gov't, $ 100 for

Valuation of horse, $ 100

Valuation of horse equipments, $ 100

Remarks: Enl Apr 19/61

Book mark:

O. M. Wentze

Copyist.

I | 11 H. Art'y. | U.S.C.T.

John Frisby

Pvt, Co. B, 11 Reg't U. S. Col'd H. Art'y.

Appears on

Company Muster Roll

for Sept & Oct, 1864.

Present or absent Present

Stoppage, $ 100 for

Due Gov't, $ 100 for

Valuation of horse, $ 100

Valuation of horse equipments, $ 100

Remarks: Stopped for clothing
Camp & Garrison Equipage
$1.12

Book mark:

D. W. Wray

Copyist.

F | 11 H. Art'y. | U.S.C.T.

John Frisby

Pri, Co. B, 11 Reg't U. S. Col'd H. Art'y.

Appears on

Company Muster Roll

for Nov & Dec, 1864.

Present or absent Present

Stoppage, $ 100 for

Due Gov't, $ 100 for

Valuation of horse, $ 100

Valuation of horse equipments, $ 100

Remarks:

Book mark:

D. W. Moore

(358) *Copyist.*

Fi | 11 H. Art'y. | U.S.C.T.

John Frisby

Fri, Co. B, 11 Reg't U. S. Col'd H. Art'y.

Appears on

Company Muster Roll

for Jan & Feb, 186 5.

Present or absent Present

Stoppage, $ 100 for

Due Gov't, $ 100 for

Valuation of horse, $ 100

Valuation of horse equipments, $ 100

Remarks:

Book mark:

D. M. Moore

(358) *Copyist.*

Jr | 11 H. Art'y. | U.S.C.T.

John Irisby

Pri., Co. B, 11 Reg't U. S. Col'd H. Art'y.

Appears on

Company Muster Roll

for Mar & Apr, 186 J.

Present or absent Present

Stoppage, $ 100 for

Due Gov't, $ 100 for

Valuation of horse, $ 100

Valuation of horse equipments, $ 100

Remarks:

Book mark:

O. H. Moore

(358) *Copyist.*

F | 11 H. Art'y. | U.S.C.T.

John Friday

Pvt., Co. B, 11 Reg't U. S. Col'd H. Art'y.

Appears on

Company Muster Roll

for May & June, 1865.

Present or absent

Stoppage, $ 100 for

Due Gov't, $ 100 for

Valuation of horse, $ 100

Valuation of horse equipments, $ 100

Remarks: Discharged at Pleasant La. for Physical Disability by Command of Maj Gen Sheridan May 5. 1865

Book mark: Discharged May 5 65 E.B.V. 11. P. 304 C.M.G. 130 Mch 1866

Frederick

(358) Copyist.

F | 11th Ky Cav | U.S.C.T.

John Finley

Pvt, Co. B, 11 Reg't U. S. Col'd Cav'y

Appears on **Co. Muster-out Roll,** dated

Camp Nelson Ky, Oct 2, 186 5.

Muster-out to date ....., 186 .

Last paid to ....., 186 .

Clothing account:

Last settled ....., 186 ; drawn since $.....100

Due soldier $.....100; due U. S. $.....100

Am't for cloth'g in kind or money adv'd $.....100

Due U. S. for arms, equipments, &c., $.....100

Bounty paid $.....100; due $.....100

Remarks: Joined Co. 11th Ky Cav'y at Glasgow Ky. May 1st 65 on Surg's Certificate of Disability furnished with final State-ment

Book mark: Discharged May 5th 65 E.R.V. 11. P.304. C.D.

Harbarger

(361) *Copyist.*

Tinsley John

R 2, Co. H, Reg't Mass Art

1 Enclosures.

Bed Cards	Final Statements 1
Burial Records	Furloughs or L. of A.
Certs. of Dis. for Discharge	Med. Certificates
C. M. Charges	Med. Des. Lists
Descriptive Lists	Orders
Discharge Certificates	Pris. of War Record
Enlistment Papers 1	Resignations

Other papers relating to—

Admission to Hosp'l	Furlough or L. of A.
Casualty Sheet	Med. Examination
Confinement	Misc. Information
Contracts	Pay or Clothing
Death or Effects	Personal Reports
Desertion	Rank
Discharge from Hosp'l	Transfer to Hosp'l
Discharge from Service	Transfer to V. R. C.
Duty	Transportation

DECLARATION OF RECRUIT.

I, J. M. Brisby desiring to VOLUNTEER as a Soldier in the *ARMY OF THE UNITED STATES*, for the term of 3yr, do declare that I am 21 years and months of age; that I have never been discharged from the United States service on account of disability or by sentence of a court martial, or by order, before the expiration of a term of enlistment; and I know of no impediment to my serving honestly and faithfully as a soldier for 3yr.

Given at Providence J. M. Brisby his Mark

The 24th day of Aug 1863.

Witness:

Augustus R Smyth.

No. 1

Corporal's

Volunteered at Providence

the 18th *day of* Aug 1863

By Maj. Carpenter

Regiment of 11th Reg't R.I.V.

enlistment; last served in Company ( ) *under the name of*

Reg't of ( )

Discharged 18

JUL 11 1871

CONSENT IN CASE OF MINOR.

I, Do CERTIFY that I am the of ; that the said is years of age; and I do hereby freely give my CONSENT to his volunteering as a SOLDIER in the ARMY OF THE UNITED STATES for the period of

Given at

The day of

Witness:

VOLUNTEER ENLISTMENT.

State of R I

Town of Providence

I, Josh B Ruby born in Litchfield

in the State of Penna aged 21 years, and by occupation a Painter DO HEREBY ACKNOWLEDGE to have volunteered this 24th day of Aug 1862, to serve as a SOLDIER in the ARMY OF THE UNITED STATES of AMERICA, for the period of 3 years, unless sooner discharged by proper authority: Do also agree to accept such bounty, pay, rations and clothing, as are, or may be, established by law for volunteers. And I, J B McEvily do solemnly swear, that I will bear true faith and allegiance to the *United States of America*, and that I will serve them honestly and faithfully against all their enemies or opposers whomsoever; and that I will observe and obey the orders of the President of the United States, and the orders of the officers appointed over me, according to the Rules and Articles of War.

Sworn and subscribed to, at Providence

this 24th day of Aug 1862. J B McEvily 2nd Lieut

BEFORE S P Langdon Maj 1st Brig R I M

I CERTIFY, ON HONOR, That I have carefully examined the above-named Volunteer, agreeably to the General Regulations of the Army, and that, in my opinion, he is free from all bodily defects and mental infirmity, which would, in any way, disqualify him from performing the duties of a soldier.

Johnson Gaddess M.D.

EXAMINING SURGEON.

I CERTIFY, ON HONOR, That I have minutely inspected the Volunteer, J B McEvily previously to his enlistment, and that he was entirely sober when enlisted; that, to the best of my judgment and belief, he is of lawful age; and that, in accepting him as duly qualified to perform the duties of an able-bodied soldier, I have strictly observed the Regulations which govern the recruiting service. This soldier has dark *eyes*, dark *hair*, dark *complexion*, is 5' *feet*, 9 *inches high*.

J. O. Angell.

14 *Regiment of* R I Vol. *Volunteers*,

RECRUITING OFFICER.

[OFFICE INDORSEMENT.]

War Department.

ADJUTANT GENERAL'S OFFICE,

March 11, 1875.

The discharge of John Trusty Private, Co. "B," 11 Reg't U. S. Colored Cavy May, is reported as follows:

On Company Muster Roll.

For May & June, 1865, May 6, 1865

Company Muster-out Roll.

May 9, 1865

Company Descriptive Book.

....., 186

Company Morning Reports.

....., 186

Soldier's Final Statement.

....., 186

Soldier's Record of Death and Interment.

....., 186

Soldier's Inventory of Effects.

....., 186

Soldier's Certificate of Disability for Discharge.

May 5, 1865

Soldier's Individual Muster-out Roll.

....., 186

Regimental Return.

For ....., 186 , ..., 186

Regimental Quarterly Returns.

....., 186

Regimental Descriptive Book.

....., 186

By Surgeon General.

(.....) ....., 186

May 5, 1865, is held to be the correct date, and the Company ~~Muster~~ Roll will be amended accordingly.

Thomas M. Vincent Asst Adjt Genl

Assistant Adjutant General.

CB 11/3024 Noted Hall.

1865

26.

CERTIFICATE OF DISABILITY FOR DISCHARGE

IN THE CASE OF

John Trusty

a Private Co. "B"

11th Reg't of Reg't U.S.C.A. Vols

Hd Qrs. 1st Bde. 11 A. & G. Cav.

Fort Jackson La.

April 11. 1865

Respectfully forwarded approved

A. L. Tizzwater

Major Comdg.

Hd. Qrs. Fort Jackson La.

April 15, 1865.

Respectfully forwarded approved

E. P. Loring

Major 10. U. S. C. A. Comdg. Post.

Received (A. G. Office) ....., 186 .

Ent on o & c Asst Adjt

Approved April 21 65

N. B. Clapp

Colonel U. S. A.

Med. Director

Hd Qrs Dept of the Gulf

New Orleans April 22nd 1865

To be discharged

By command of

Maj. Genl. Banks.

Thomas Durbank

1st Lieut & A.A.A. General

ADJUTANT GENERAL'S OFFICE

May 26th 1865

Duplicate sent the Pension Office.

ARMY OF THE UNITED STATES.

CERTIFICATE

OF DISABILITY FOR DISCHARGE.

Private John Frisby of Captain Phanuel E. Bishop's Company, ("B") of the Eleventh Regiment of United States Cold Army 1st was enlisted by Major Sanford of the 1st Regiment of R. I. H. A. at Providence R. I. on the 24th day of August, 1863, to serve 3 years; he was born in Little York in the State of Pennsylvania, is Twenty-one years of age, 5 feet 9 inches high, Dark complexion, Black eyes Black hair, and by occupation when enlisted a Laborer. During the last two months said soldier has been unfit for duty 60 days.* Said Private John Frisby had served faithfully with the Company from the time of its organization, September 14th 1863, up to Oct 3d 1863, when he was mustered, while serving in a detachment upon a heavy gun at Fort Jackson La. The injury was contracted in line of duty. In my opinion he is no longer capable of performing the duties of a Soldier.

STATION: Fort Jackson La

DATE: April 11th 1865

Phanuel E. Bishop
Captain 11th V.V. I. & C. A. Hy
Commanding Company.

I CERTIFY, that I have carefully examined the said Private John Frisby of Captain P. E. Bishops Company, and find him incapable of performing the duties of a soldier because of† Indirect Inguinal Hernia. In my opinion he Cannot reasonably be expected to recover in General Hospital

Respectively Approved. approved
Williams Brother
Surgeon U.S.A. & S.B.A.Hy. Senior Surgeon to the Post.

J. R. Draper
Asst Surgeon.
11th V.V.I. & C.A. Army

DISCHARGED, this fifth day of May, 1865, at Brashear City Louisiana.

A. J. Fitzwater
Major
Commanding the 8th Bat.

The *Soldier* desires to be *addressed* at

Town _____ *County* _____ *State* _____

* See Note 1 on the back of this. † See Note 2 on the back of this.

[A. G. O. No. 100 & 101—First.] [DUPLICATES.]

No. 2, 11 U.S.Col'd H.Art'y.

Private	Corporal.

CARD NUMBERS.

1	26
2	27
3	28
4 Lee Yorkey,	29 Moses.
5	30
6	31
7	32
8	33
9	34
10	35
11	36
12	37
13	38
14	39
15	40
16	41
17	42
18	43
19	44
20	45
21	46
22	47
23	48
24	49
25	50

Book Mark:

See also

Co. M, 11 U.S.Col'd H. Artᵒy.

2ⁿᵈ Lieut	2ⁿᵈ Lieut

CARD NUMBERS.

1	6181146	26	
2	6181045	27	
3	6201490	28	
4	6201645	29	
5	6201806	30	
6	6201965	31	
7	6202114	32	
8	6202267	33	
9	6202397	34	
10	6202518	35	
11	6202632	36	
12	6202949	37	
13	9437005	38	
14	9437119	39	
15		40	
16		41	
17		42	
18		43	
19		44	
20		45	
21		46	
22		47	
23		48	
24		49	
25		50	

Book Mark:

See also

1.

8.892383 Pollit

G. D. Mark
24.

F. | 11 H. Art. | U.S.C.T.

Frank Frost.

2 Lt., Co....., 11 Reg't U.S. Col'd H. Art

Appears on

Regimental Descriptive Book

(List of Commissioned Officers)

of the regiment named above.

Rank 2d. Lieut

Date of appointment Dec-24, 1863.

Remarks: Private 10th. R. I. Infty. May-26-1862. Private 11th. R. I. Infty. Born in Mass. Resident R. I.

F. A. Wright

(384) *Copyist*

F. | 11 N. Art. | **U.S.C.T.**

Frank Frost.

2 Lt., Co. ....., 11 Reg't U. S. Col'd L. Art.

Appears on

Regimental Descriptive Book

(List of Commissioned Officers)

of the regiment named above.

Rank 2 d. Lieut.

Date of appointment Jan. 20 1864.

Remarks: Age 20
Private 10th. R. I. Inft.
May- 26- 1862. Private
11th. R. I. Inft.
Born in Mass. Res-
ident R. I. Re-
mustered Dec- 24- 1863.
Discharged (honora-
bly) War. Dept.
A. G. O. S. O. No. 303
Ex. 8 - June-14. 1865.

F. A. Wright.

(384) *Copyist.*

F | **11** H. Art'y. | **U.S.C.T.**

Frank Frost

2d Lt, Co. M, 14 Reg't R. I. Col'd H. Art'y.*

Appears on

Company Muster Roll

for 25 Jan to 29 Feb, 1864.

Present or absent Present

Stoppage, $ 100 for

Due Gov't, $ 100 for

Valuation of horse, $ 100

Valuation of horse equipments, $ 100

Remarks:

This organization subsequently became Co. M, 11 Reg't U. S. Colored Heavy Artillery.

Book mark:

J Underwood

(358) Copyist.

F | 11 H. C. | U.S.C.T.

Frank Fraught

14" R. I. Col'd H. A.

2" L., Co. ....., 11 Reg't U. S. Col'd H. A.

Age ..... years.

Appears on a

Detachment Muster-in Roll

of the organization named above. Roll dated

Providence R.I. March 31, 1864.

Muster-in to date Jany 20, 1864.

Appointed:

~~Joined for duty and enrolled~~:

When Jany 16, 1864.

Where .....

Period 3 years.

Valuation of horse, $ 100

Valuation of horse equipments, $ 100

Remarks: .....

Corrected by P. J. G. Dec 29. 1903.

Book mark: .....

(337) O M Jackson
Copyist.

F | 11 H. Art'y. | U.S.C.T.

Frank Frost

2nd Lt, Co. M, 14 Reg't R. I. Col'd H. Art'y.*

Appears on

Company Muster Roll

for Mch & Apl, 1864.

Present or absent Present

Stoppage, $ 100 for

Due Gov't, $ 100 for

Valuation of horse, $ 100

Valuation of horse equipments, $ 100

Remarks: On duty with Company before Mustering. Appointed Jan 16/64 Transferred from Co I Jan 21/64

This organization subsequently became Co. M, 11 Reg't U. S. Colored Heavy Artillery.

Book mark:

J. Underwood
Copyist.

F 1 11 H 4 U.S.C.T.

Frank Frost

2d Lieut, Co. M, 11 (14th U.S.C.) Reg't U. S. Col'd Hvy Art

Age 19 years.

Appears on an

Individual Muster-in Roll

of the organization named above. Roll dated New Orleans La, May 9, 1864.

Muster-in to date Dec. 24, 1864.

Joined for duty and enrolled:

When Dec. 24, 1864.

Where New Orleans La.

Period 3 years.

Valuation of horse, $ 100

Valuation of horse equipments, $ 100

Remarks: Appointed from Civil life to 2nd Lieut of Co. M. 14th Rhode Island Heavy Artillery volunteers old The vacancy was original (or)

Book mark:

Logan

(336) Copyist.

JAN. 14

6181045

☆1891☆

Remustered by virtue
of special authority from
the War Dept. contained
endorsement dated War
Dept. A.G.O. April 7. 1864
signed C. W. Foster, A.A.
Genl vols. on letter of Charles
E. Dailey Col. - A.D.C.
dated State of Rhode
Island, Executive Dept.
Providence 30 March 1864
Muster to take effect
Dec. 24th 1864.

F | 11 H. Art'y. | U.S.C.T.

Frank Frost

2" Lt., Co. M, 8 Reg't U. S. Col'd H. Art'y.*

Appears on

Company Muster Roll

for May & June, 1864.

Present or absent Present.

Stoppage, $ ..... 100 for .....

Due Gov't, $ ..... 100 for .....

Valuation of horse, $ 100

Valuation of horse equipments, $ 100

Remarks: First muster Jan. 20/64 by Capt. W. Silvey, U.S.A. Re-muster by Special Order of War Dept. May 9. '64. To date Dec. 24/63, Pay due from Dec. 24/63, to Jan. 20/64.

† This organization subsequently became Co. "M", 11 Reg't U. S. Colored Heavy Artillery.

Book mark: .....

Taber

Copyist.

A | 11 H. Art'y. | U.S.C.T.

Frank Frost

2" Lt, Co. M, 11 Reg't U. S. Col'd H. Art'y.

Appears on

Company Muster Roll

for dated Sept. 1, 1864.

Present or absent Present

Stoppage, $ 100 for

Due Gov't, $ 100 for

Valuation of horse, $ 100

Valuation of horse equipments, $ 100

Remarks: First mustered Jan. 20/64 by Capt. W. Silvey, U.S.A. Remustered by special Order of War Dept. May 9/64 to date Dec. 24/63. Pay as 2" Lt. from Dec. 24/63 to Jan. 20/64

Book mark:

(358) Copyist.

Fr | 11 H. Art'y. | U.S.C.T.

Frank Frost

2" Lt., Co. M, 11 Reg't U. S. Col'd H. Art'y.

Appears on

Company Muster Roll

for Sept & Oct., 1864.

Present or absent Present.

Stoppage, $ 100 for

Due Gov't, $ 100 for

Valuation of horse, $ 100

Valuation of horse equipments, $ 100

Remarks: Last Muster Jan 20/64
Re mustered by Special Orders
War Dept: May 9/64. To date
Dec 24/63. Pay due as 2d Lt from
Dec 24/63 to Jan 20/64

Book mark:

A. Hubbard

(358) *Copyist.*

F | 11 H. Art'y. | U.S.C.T.

Frank Frost-

2"d Lt., Co. M, 11 Reg't U. S. Col'd H. Art'y.

Appears on

Company Muster Roll

for Nov & Dec, 1864

Present or absent Present.

Stoppage, $ 100 for

Due Gov't, $ 100 for

Valuation of horse, $ 100

Valuation of horse equipments, $ 100

Remarks: First Muster Jan 20/64
Re-Mustered by Spl Ord of War
Dept. May 9/64 to date Dec 24/63
Pay due as 2d Lt. from Dec 24/63
to Jan 20/64

Book mark:

A. L. Hubbell

(358) *Copyist.*

Fr | 11 H. Art'y. | U.S.C.T.

Frank Frost

2 "Lt., Co. M, 11 Reg't U. S. Col'd H. Art'y.

Appears on

Company Muster Roll

for Jan & Feb, 1865.

Present or absent Present.

Stoppage, $ 100 for

Due Gov't, $ 100 for

Valuation of horse, $ 100

Valuation of horse equipments, $ 100

Remarks: Stoppage for Subsistence, $36.00

A. Hubbard

Book mark:

(358) *Copyist.*

F | 11 H. Art'y. | U.S.C.T.

Frank Frost.

2" Lt, Co. M, 11 Reg't U. S. Col'd H. Art'y.

Appears on

Company Muster Roll

for Mch & Apl, 1865.

Present or absent Absent.

Stoppage, $ ---- 100 for ----

Due Gov't, $ ---- 100 for ----

Valuation of horse, $ ---- 100

Valuation of horse equipments, $ ---- 100

Remarks: On detached service by S/S. O. 40 23. Ex 2 of Apl 12/65 from Hd. Qrs. Carrollton Dist- Stoppage for Subsistence $ 72.00

J. Stubbee

(358) *Copyist.*

(F | 11 H. Art'y. | U.S.C.T.

(Frank (Fossett

2nd Lieut, Co. M, 11 Reg't U. S. Col'd H. Art'y.

Appears on

Company Muster Roll

for May & June, 1865.

Present or absent Absent

Stoppage, $.....100 for .....

.....

Due Gov't, $.....100 for .....

.....

Valuation of horse, $.....100

Valuation of horse equipments, $.....100

Remarks: Resigned — Honorably mustered out of service by S.O. No. 303 Ex & from War Dept. June 14/65.

.....

.....

.....

.....

.....

Book mark: .....

(Fossett

(358) *Copyist.*

F | **11 H. Art'y.** | **U.S.C.T.**

Frank Frost

2nd Lieut., Co. M, 11 Reg't U. S. Col'd H. Art'y.

Appears on **Co. Muster-out Roll,** dated

New Orleans La, Oct 2, 1865.

Muster-out to date ....., 186 .

Last paid to ....., 186 .

Clothing account:

Last settled....., 186 ; drawn since $.....100

Due soldier $.....100; due U. S. $.....100

Am't for cloth'g in kind or money adv'd $.....100

Due U. S. for arms, equipments, &c., $ 100

Bounty paid $.....100; due $.....100

Remarks: Joined at original organization. Resigned. Discharged by S.O. No. 303. Ex. & War Dept. Adjt Genl's Office June 14/1865.

Book mark: .....

Fiorsett

(361) *Copyist.*

Frost, Frank

2 Lt, Co. M, 11 Regt U.S.C.H.A

6 Enclosures.

Bed Cards	Descriptive Lists
Burial Records	Final Statements
Certs. of Dis. for Discharge	Furloughs
C. M. Charges	Med. Des. Lists
Med. Certificates	Orders 2

Resignation 1

Other papers relating to—

Admission to Hosp'l	Furlough
Casualty Sheet (Officer's)	Med. Examination
Confinement	Misc. Information 2
Contracts	Pay or Clothing
Death or Effects	Personal Reports
Desertions	Rank
Discharge from Hosp'l	Transfer to Hosp'l
Discharge from Service	Transfer to V. R. C.
Duty 1	Transportation

MICROFILM PUBLICATION M 1832

COMPILED MILITARY SERVICE RECORDS
OF VOLUNTEER UNION SOLDIERS WHO SERVED WITH
THE UNITED STATES COLORED TROOPS (USCT)
11TH REGIMENT OF HEAVY ARTILLERY

PERSONAL PAPERS' TARGET SHEET

PLEASE NOTE THE CHECKED INFORMATION ABOUT THE PERSONAL PAPERS IN THIS FILE:

☐ NO PERSONAL PAPERS WERE FOUND IN THIS FILE WHEN THE RECORDS WERE ARRANGED FOR MICROFILMING.

☒ 7 PERSONAL PAPER(S) FOUND IN THIS FILE WHEN THE RECORDS WERE ARRANGED FOR MICROFILMING.

War Department.
Adjutant-Gen'l's Office June 14/65
Washington D.C.

Special Orders
No 303 Ex - 8

Accepts the resignation of
2d Lieut Frank Frost - 1st U.S
Colored Artillery (Heavy)

Rec'd Batt No 2 June 26th 1865-

SPECIAL ORDERS, }
No. 303. }

WAR DEPARTMENT,
ADJUTANT GENERAL'S OFFICE,
Washington, June 14th, 1865.

(*Extract.*)

* * * * *

8. The following named officers, having tendered their resignations, are, upon the recommendation of their superior officers, hereby honorably discharged the service of the United States, with condition that they shall receive no final payments, until they have satisfied the Pay Department that they are not indebted to the Government:—

2d Lieutenant Frank Frost, 11th U. S. Colored Artillery, (Heavy.)

* * * * *

By order of the Secretary of War:

E. D. TOWNSEND,
Assistant Adjutant General.

OFFICIAL:

E. D. Townsend

Assistant Adjutant General.

C. O. 11th U.S. Col'd Artly. (Heavy).
Hdqrs. Dept. of the Gulf.

Lt. Frank Frost
Descriptive
Roll

11 U. S. C. H. A

Miscellaneous

Camp Bailey, Dutch Island R. I.
Feb. 19th 1864.

Adjutant J. C. Whiting Jr.
Sir

On the 22d. of May 1862
I enlisted in Co. "B." 10th. Reg. R. I. V.-
an Infantry Regiment, and served
as a private for three months.

For the greater part of the
time of service our Regiment per-
formed garrison duty near Wash-
ington D. C. The Reg-
iment was mustered out of the
service on the 12th. of September
1862. On the 10th of
September 1862 I enlisted in Co.

"D" 11th Reg. R. I. V. Infantry for the
period of nine months and served
as a private during that time.

The first seven months
of our campaign our Regiment
was stationed near Washington
D.C. The remaining time
we were at Suffolk Va which
was then besieged by the rebels.

But two of the companies
were in action.

The 21st of December
1863 I was appointed a Second
Lieutenant in the 14th Reg. R. I.
H. Artillery and on the 28th
of January I received my appoint-
ment as Second Lieutenant from
the 11th I was the same Regiment.

I was mustered into
this Regiment on the 8th of Feb.
1864. The muster dating from the
20th of January 1864

I was born in the State of
Massachusetts but for the past seven
years I have resided in Prov. R. I.

Very Respectfully
Your Obedient Servt
Frank Frost.
2nd. Lieut. 14th R. I. H. A.

File a copy
Endorsed
in full Became
11 U. S. C. N. A.

A 100 C. S. 1864

Providence R. I.

March 30th/64

Rhode Island, State of
Col Chas. E. Bailey U.S.C

Wishes to have 2d Lieut.
Frank Frost Co "M" - 14th
R.I.H. Artly
mustered to date Dec 24th
1863. that being the day
upon which he reported
for duty

Hd Q. M. G. Mar 31st/64

Copy for Rec.

War Dept. A.G. Office
April 2d 1864

Respectfully returned to Col
Chas. E. Bailey A.D.C Prov-
R.I. to know where the 3d
Battalion 14th R.I. Heavy Artly
is now serving.

It is not known
whether it has embarked for the
Department of the Gulf as ordered

By order
(Signed) E.W. Foster
Asst Adjt Genl

E. [illegible] Copy [illegible]
A.G.O. April 5th 1864

See C.S. for 3
date April 30/64
Muster Office

State of R. Island
Executive Dept.
Prov April 5th 1864

Respectfully returned
to Maj E.W. Foster
A.A.G. Chief of Colored
Bureau
Washington D.C.

The 3d Batt. 14th
R.I.H.A sailed for
New Orleans on the
2d inst, and was
ordered to report to
Gen'l Banks
Cond'g Dept of the Gulf

(Signed)
Chas. E Bailey
Col A.A.D.C

Extract in full

Extract

State of Rhode Island
Executive Department
~~Mustering Office, Department of the Gulf,~~

~~New Orleans~~, March 30th 1864

Major C. W. Foster A.A.G.
Chief of Colored Bureau
Washington D.C.

Major

By direction of His Excellency the Governor I have the honor to request that Second Lieut. Frank Frost Co "M" 14th R.I.H.A may be remustered to date Dec 24th 1863 the day on which he reported for duty with his Company

I am Major
Very Respectfully
(Signed) Chas. E. Bailey
Col & A.D.C.

True Copy of this Requisition
Thos. Bailey Esq.
Col & Asst Adjt Gen
Chief Muster & Inspector

(Extract)

War Dept A.G. Office
April 7th 1864

Respectfully referred to
Captain Woodrow 17th U.S.
Infantry Commissary &
Musters Dept. of the Gulf
New Orleans La - Who
will cause 2d Lieut Frank
Frost 114th Regt N.Y.V. to
be mustered to date
from December 24th 1863

By order of Sec. of War
(Signed) C.W. Foster
Asst Adjt Genl Vols

O.B. Vol 6 Page 685

Franks Frost was mustered in as 2d Lieut. 11th Regt.
U.S.C.A. (Ky) Dec. 24th 1863 — On Returns of that Regt
for the month April 1865. (latest on file) he is reported on special
duty. in charge Hospital Guards

Strength	Convict	64	
"	Enlisted	1393	H.S.

H de Qrs. Carrollton Dist.
Carrollton, La., May 12th 1865.

Special Orders
No. 31 Ex 1—

2nd Lt. Frank
Frost relieved
from D. P. in charge
of Hospital Guard
at Greenville, La.,

Recd May 12th 65.

Headquarters Carrollton District,
Carrollton, La. May 12th 1865.

Special Order.
No. 31.

Ex. I.

2d Lieut Frank Frost
11th Me S H is hereby relieved from the
duties to which he was assigned per
Special Order from these Headquarters
as Officer in Charge of guards at
the Hospital near Greenville La and
will report to the commanding Officer
of the Battalion without delay.

By command of
Col. Simon Jones
Comdg District
D. J. Whelenau
Capt and A. A. A. G.

C. C.

2d Batt. 11th Me. S. H.

Maj. J. J. Comstock 11th U.S.C.A.H. requests that the Detachment of his Regt doing Pro Duty at Carrollton be relieved —

May 9. 1865 —

Frank Frost.
2 Lt.

E.S. 63.

Head Quarters.
Carrollton District
May 11th 1865.

Respectfully referred to Capt Wage A.D.C. Mar. for endorsement of opinion in respect to propriety of relieving the guards at his Office.

By order of
Col Simon Jones
Comdy District
D. J. Whiteman
Capt. 93d Ills. Vol. A.A.A.G.

Office of Pro. Mar.
Parish of Jefferson
Carrollton La May 11/65

Respectfully returned.

The detachment of the 11th U.S.C.A. (Heavy) doing Pro. Duty under my Command are well adapted for such duty as the greater portion of them can read and write. Notwithstanding I see no impropriety in relieving them providing others be sent in their place. who possess the same qualifications

O. L. Wage
Capt & Pro Mar

E.S. 63.

Head Qrs Carrollton Dist.
May 12th 1865.

Respectfully returned with reference to endorsement of Capt Wage A.D.C.

It is not deemed expedient to relieve the men detailed as Provost Guard as their places can not be filled by persons possessing the acquirements indicated as essential in the endorsement of the Provost Marshal.

By command of
Col. Simon Jones
Comdy District
D. J. Whiteman
Capt. A.A.A.G.

HEADQUARTERS 3rd BATTALION, 11th U. S. C. A. Heavy:

Camp Parapet, Louisiana, May 9th 1865.

Capt. T. J. Whiteman
Act. Asst. Adjt. Genl
Carrollton Dist.
Captain:

I have the honor to inform you that there are still Seventeen (17) Men detailed as Provost guard in Carrollton who have not yet been relieved. 2nd Lt. Frank Frost is also still on duty at the Greenville Hospital. I would respectfully request that these Men be relieved as I have not sufficient Men to do the duty in Camp.

Very respectfully
Your obt. Servt.
J. J. Comerford
Maj. 11th N. Y. C. A. (H. A.)
Comdg Battalion

Hd Qt Lo Div of La
New Orleans May 22d 1865.
S.R. 2861 A 65

Respy referred to Colonel
Jones 93d U.S.C.I. to whose
judgment this matter
is left.

By order of
Brig Gen Sherman
Wentworth Sherman
Major & A.A.G.

Head Qrs. U.S. Forces,
Camp Parapet. La.
May 23d 1865.

Respectfully transmitted
with reference to Endorse-
ment of Gen. Sherman

By Command of
Col Simon Perkins
Commanding
D. J. Whitman
Capt. A.A.A.G.

Hd. Qrs. 3rd Brig. 1st Div. N.Y.P.A. (N.I.
Camp Parapet, La., May 20th 1863.

Respectfully referred to Hd. Qrs. Lo. Div. of La. to ask if these men are to be retained in this position, there being two companies of infantry doing provost duty in Carrollton at this time, and these men being needed in the Battalion

George Selfridge
Capt. 11th N.Y.V. (N.I.
Cmdg Battalion.

2-B 63-113

Head Qrs. N.O. Forces.
Camp Parapet La.
May 30th 63.

Respectfully Forwarded

Simmons
Col. 93d N.Y.V.
Commanding.

HEADQUARTERS 3rd BATTALION, 11th U. S. C. A. Heavy;

Camp Parapet, Louisiana, ... May 9th ..... 1865.

Capt. T. J. Whiteman
Act. Asst. Adjt. Genl
Carrollton Dist.
Captain:

I have the honor to inform you that there are still Seventeen (17) Men detailed as Provost guard in Carrollton who have not yet been relieved. 2nd Lt. Frank Frost is also still on duty at the Greenville Hospital. I would respectfully request that these Men be relieved as I have not sufficient Men to do the duty in Camp.

Very respectfully
Your obt. Servt.
J. J. Comerford
Major 11th N. H. C. A. (H. A.)
Comdg Battalion

Camp Parapet La
1st Lt Co. A 2d Regt. N.H.V. 1865

Frost Frank
2nd Lt. 1st Co. A. 2d N.H.V.

Tenders resignation.
On the ground of
important business at home and
sickness in his
family.

2nd Lt. 17 E.B. 64.
Head Qrs 2d Brig
Camp Parapet May 17th
Respectfully Forwarded
Approved.
Recommended.
Col. 93d U.S.C.T.
Commanding.
Rec'd A.G.O. June 2.

Hd. Qrs. 2d Brig. 1st Div. 19th A.C. (Hd.)
Camp Parapet La., May 16th 65.
Respectfully forwarded
Disapproved
J. J. Comstock
Major Comdg.

Hd Qrs 1st Div of La
New Orleans May 18. 1865
2253 65
Respy forwarded Approved
Brig Genl comdg

Note: Under Sp Or. No
302 of June 14th 1865
Approved.

~~H. 142. 24. 1865~~
Headquarters, Department
of the Gulf

New-Orleans, La. May 19th 1865.

Respectfully Forwarded to
Headquarters Military Divi-
sion of West Mississippi,
Approved.
N. P. Banks
Maj. Genl Comdg.

1911 Mo. Vol. 1865.
H'd-Q'r's. Mil. Div. West Miss.,
New Orleans, La., May 21st 1865.
Respectfully forwarded to the Adjutant General of the Army. Approved
E R S Canby
Major General Commanding.
by E.N.B.D. 217, C. H. Dyer
Capt. and Ass't Adjutant General.
The General being absent in the field.
Rec'd A.G. Dept May 29. 1865

Camp Parapet, La., May 12th 1863.

Sir:-

I have the honor herewith to tender my resignation as Second Lieutenant in Co. "K," 11th U.S.C.H.A. (Ky) on account of the following reasons.

1st. I do not desire to remain in the Military service permanently and as I have had an excellent situation offered me at home I wish to accept it.

2nd. There has been considerable sickness in my family lately, rendering my father almost unable to attend to his business and therefore I feel that I am still more needed there.

I certify, on honor, that I am not indebted to the United States in any account whatever, and that I am not responsible for any Government property, except what I am prepared to turn over to the proper officer on the acceptance of my resignation.

W. 204 (A.G.O.) 1865

Foregoing recommendation approved.

By command of
Lieut. Gen. Grant

Jno A Rawlins
Brig Gen. & Chf. Staff

Headqrs. Stfd
June 12. 65.

Camp Parapet, La., May 12th 1865.

Sir:-

I have the honor herewith to tender my resignation as Second Lieutenant in Co. "K," 11th U.S.C.H.A. (Ky) on account of the following reasons.

1st. I do not desire to remain in the Military service permanently and as I have had an excellent situation offered to me at home I wish to accept it.

2nd. There has been considerable sickness in my family lately, rendering my father almost unable to attend to his business and therefore I feel that I am still more needed there.

I certify, on honor, that I am not indebted to the United States in any account whatever, and that I am not responsible for any Government property, except what I am prepared to turn over to the proper officer on the acceptance of my resignation.

and that I was last paid by Major John S. Dolman to include the 31st day of August 1864.

Very Respectfully,
Your obedient Servant,
Frank Frost,
2nd Lieut. 11th U. S. C. A. (Hy)

To,
Brevet Lieut. Col. J. Schuyler Crosby,
A. A. Genl. Dept. of the Gulf

Adjt. Genl's Office
June 10, 1863.
Respectfully submitted to Lieutenant General
Hd. S. Grant, Commanding Armies of the United States, with the recommendation that this Officer be honorably discharged the service of the United States. - There being an excess of officers in this regiment.
C. W. Foster
A. A. Genl. Vols.

Inside Front

CARD NUMBERS.

1 6182198	26
2 6182344	27
3 6182496	28
4 6182637	29
5 6182774	30
6 6182905	31
7 6183111	32
8 6183795	33
9 9123810	34
10 9123961	35
11	36
12	37
13	38
14	39
15	40
16	41
17	42
18	43
19	44
20	45
21	46
22	47
23	48
24	49
25	50

Book Mark:

See also

F | 11 H. Art'y. | U.S.C.T.

James Fry

, Co. A, 11 Reg't U. S. Col'd H. Art'y.

Appears on

Company Descriptive Book

of the organization named above.

DESCRIPTION.

Age 31 years; height 5 feet 8 inches.

Complexion Mulatto

Eyes Blk; hair Blk

Where born East Greenwich R I

Occupation Farmer

ENLISTMENT.

When Aug 20, 1863.

Where Providence

By whom Capt Thu Fry; term 3 y'rs.

Remarks: Died at Fort Jackson La of congestive fever Sept 9/64. Inventory & final statements rec'd

James

(3830) Copyist.

(4) | **11 H. Art'y.** | **U.S.C.T.**

James Fry

, Co. A, 11 Reg't U.S. Col'd H. Art'y.

Appears on

Company Descriptive Book

of the organization named above.

DESCRIPTION.

Age 31 years; height 5 feet 8 inches.

Complexion Mulatto

Eyes Blk; hair Blk

Where born East Gannet R. I.

Occupation Farmer

ENLISTMENT.

When Aug 20, 1863.

Where Providence

By whom Thos N. Fry; term 3 y'rs.

Remarks: Died at Fort Jackson La. Sept 9. 64 Inventory and final statements rend. Dept 10/64

James

(3830) **Copyist.**

F | 11 H. Art'y. | U.S.C.T.

James Fly

Pvt., Co. A, 14 Reg't R.I. Col'd H. Art'y.*

Age 31 years.

Appears on

Company Muster-in Roll

of the organization named above. Roll dated Camp Smith near Providence R.I., Aug 28, 1863.

Muster-in to date Aug 28, 1863.

Joined for duty and enrolled:

When July 20, 1863.

Where Providence

Period 3 years.

Valuation of horse, $ 100

Valuation of horse equipments, $ 100

Remarks: 2nd District

* This organization subsequently became Co. A, 11 Reg't U. S. Colored Heavy Artillery.

Book mark:

Prevatt

(356) Copyist.

11 H. Art'y. | U.S.C.T.

James Fry

Pvt., Co. A, 14 Reg't R. I. Col'd H. Art'y.*

Appears on

Company Muster Roll

for Aug 28 to Dec 31, 1863.

Present or absent Present

Stoppage, $ ---- 100 for ----

Due Gov't, $ ---- 100 for ----

Valuation of horse, $ ---- 100

Valuation of horse equipments, $ ---- 100

Remarks: ----

*This organization subsequently became Co. A, 11 Reg't U. S. Colored Heavy Artillery.

Book mark: ----

Prevatt

Copyist.

11 H. Art'y. | U.S.C.T.

James Fry

Pvt., Co. A, 14 Reg't R. I. Col'd H. Art'y.*

Appears on

Company Muster Roll

for Jan & Feb, 1864.

Present or absent Present

Stoppage, $ 100 for

Due Gov't, $ 100 for

Valuation of horse, $ 100

Valuation of horse equipments, $ 100

Remarks:

*This organization subsequently became Co. A, 11 Reg't U. S. Colored Heavy Artillery.

Book mark:

Prewitt

(358) Copyist.

11 H. Art'y. | U.S.C.T.

James Fry

Pvt., Co. A, 14 Reg't R. I. Col'd H. Art'y.*

Appears on

Company Muster Roll

for Mch & Apl, 1864.

Present or absent Present

Stoppage, $ 100 for

Due Gov't, $ 100 for

Valuation of horse, $ 100

Valuation of horse equipments, $ 100

Remarks:

*This organization subsequently became Co. A, 11 Reg't U. S. Colored Heavy Artillery.

Book mark:

Prewitt

(358) Copyist.

F | 11 H. Art'y. | U.S.C.T.

James Fly

Pvt., Co. A, 8 Reg't U. S. Col'd H. Art'y.*

Appears on

Company Muster Roll

for May & June, 1864.

Present or absent Present

Stoppage, $ 100 for

Due Gov't, $ 100 for

Valuation of horse, $ 100

Valuation of horse equipments, $ 100

Remarks:

† This organization subsequently became Co. A, 11 Reg't U. S. Colored Heavy Artillery.

Book mark:

Prewitt

(358) Copyist.

F | 11 H. Art'y. | U.S.C.T.

James Day

R. ., Co. A, 11 Reg't U. S. Col'd H. Art'y.

Appears on

Company Muster Roll

for July & Aug., 1864.

Present or absent Present

Stoppage, $ 100 for

Due Gov't, $ 100 for

Valuation of horse, $ 100

Valuation of horse equipments, $ 100

Remarks: Born April 19. 1861

Book mark:

B. Fishoff

(358) Copyist.

A. | 11 H. Art'y. | U.S.C.T.

James Day

R., Co. A, 11 Reg't U. S. Col'd H. Art'y.

Appears on

Company Muster Roll

for Sept. & Oct., 1864.

Present or absent.....

Stoppage, $.....100 for .....

.....

Due Gov't, $.....100 for .....

.....

Valuation of horse, $.....100

Valuation of horse equipments, $.....100

Remarks: Deserted

from Batt. Hospital

Dist Jackson Miss. Sept. 9th

1864. Muster on Final Statements

rendered.

.....

.....

.....

Book mark: No. 74. 923 Mch. 24. 65

74. 923 Feb. 23. 1865

(358) Copyist.

F | 11 H. Art'y. | U.S.C.T.

James Fry,

Priv., Co. A., 11 Reg't U. S. Col'd H. Art'y.

Appears on **Co. Muster-out Roll,** dated

New Orleans, La., Oct. 2, 186 5.

Muster-out to date ....., 186 .

Last paid to ....., 186 .

Clothing account:

Last settled....., 186 ; drawn since $.....100

Due soldier $.....100; due U. S. $.....100

Am't for cloth'g in kind or money adv'd $.....100

Due U. S. for arms, equipments, &c., $ 100

Bounty paid $.....100; due $.....100

Remarks: Joined Regt. Orgn. Died Ft. Jackson, La., Sept. 7/64. Surg'n's and Final Statement. per'd Sept. 7/64.

Book mark: 74. 923 A.B.V.

R. Brauner

(361) Copyist.

Sir James

C., Co. ——, 11 Reg't Mo. Cav.

4 Enclosures.

Bed Cards	Final Statements 2
Burial Records	Furloughs or L. of A.
Certs. of Dis. for Discharge	Med. Certificates
C. M. Charges	Med. Des. Lists
Descriptive Lists	Orders
Discharge Certificates	Pris. of War Record
Enlistment Papers 1	Resignations

Other papers relating to—

Admission to Hosp'l	Furlough or L. of A.
Casualty Sheet	Med. Examination
Confinement	Misc. Information
Contracts	Pay or Clothing
Death or Effects 1	Personal Reports
Desertion	Rank
Discharge from Hosp'l	Transfer to Hosp'l
Discharge from Service	Transfer to V. R. C.
Duty	Transportation

DECLARATION OF RECRUIT.

I, James Fry desiring to VOLUNTEER as a Soldier in the *ARMY OF THE UNITED STATES*, for the term of three years, do declare that I am Thirty one years and ——— months of age; that I have never been discharged from the United States service on account of disability or by sentence of a court martial, or by order, before the expiration of a term of enlistment; and I know of no impediment to my serving honestly and faithfully as a soldier for three years

Given at Riverdena
The twentieth day of August 1863.

Witness:
Julius P Hamblin

his
James + Fry
mark

No. 56

Name Jas Fry

Volunteered at Riverdena

on the 20th day of August 1863,

for three years

By Capt Hartley

Regiment of

enlistment; last served in Company ( )

Reg't of

Discharged 18

U.S.A.

JUL 11 1871
MILITARY RECORDS

CONSENT IN CASE OF MINOR.

I, Do CERTIFY that I am the
of ; that the said
is years of age; and I do hereby freely give
my CONSENT to his volunteering as a SOLDIER in the ARMY OF THE UNITED STATES for the period of

Given at
The day of

Witness:

VOLUNTEER ENLISTMENT.

State of Rhode Island Town of Providence

I, James Fry born in East Greenwich in the State of Rhode Island aged thirty years, and by occupation a Farmer DO HEREBY ACKNOWLEDGE to have volunteered this twentieth day of August — 1863, to serve as a SOLDIER in the ARMY OF THE UNITED STATES of AMERICA, for the period of three years, unless sooner discharged by proper authority: Do also agree to accept such bounty, pay, rations and clothing, as are, or may be, established by law for volunteers. And I, James Fry do solemnly swear, that I will bear true faith and allegiance to the *United States of America*, and that I will serve them honestly and faithfully against all their enemies or opposers whomsoever; and that I will observe and obey the orders of the President of the United States, and the orders of the officers appointed over me, according to the Rules and Articles of War.

Sworn and subscribed to, at Providence this twentieth day of August 1863. BEFORE Jno. Paine Justice of the Peace

his James × Fry mark

I CERTIFY, ON HONOR, That I have carefully examined the above-named Volunteer, agreeably to the General Regulations of the Army, and that, in my opinion, he is free from all bodily defects and mental infirmity, which would, in any way, disqualify him from performing the duties of a soldier.

Johnson Landers M.D.

EXAMINING SURGEON.

I CERTIFY, ON HONOR, That I have minutely inspected the Volunteer, James Fry previously to his enlistment, and that he was entirely sober when enlisted; that, to the best of my judgment and belief, he is of lawful age; and that, in accepting him as duly qualified to perform the duties of an able-bodied soldier, I have strictly observed the Regulations which govern the recruiting service. This soldier has Black *eyes*, Black *hair*, Mulatto *complexion*, is five *feet*, Eight- *inches high*.

Capt Thos W Fry
1st Colored Co Heavy Artillery

Regiment of Rhode Island *Volunteers,*

RECRUITING OFFICER.

ARTICLES OF WAR.

ART. 95. When any non-commissioned officer or soldier shall die, or be killed in the service of the United States, the then commanding officer of the troop or company shall, in the presence of two other commissioned officers, take an account of what effects he died possessed of, above his arms and accoutrements, and transmit the same to the office of the Department of War, which said effects are to be accounted for, and paid to the representatives of such deceased non-commissioned officer or soldier. And in case any of the officers, so authorized to take care of the effects of deceased officers and soldiers, should, before they have accounted to their representatives for the same, have occasion to leave the regiment or post, by preferment or otherwise, they shall, before they be permitted to quit the same, deposit in the hands of the commanding officer, or of the assistant military agent, all the effects of such deceased non-commissioned officers and soldiers, in order that the same may be secured for, and paid to, their respective representatives.

ARMY REGULATIONS—EDITION OF 1861.

DECEASED SOLDIERS.

Par. 152. Inventories of the effects of deceased non-commissioned officers and soldiers, required by the 95th Article of War, will be forwarded to the Adjutant General, by the commander of the company to which the deceased belonged, and a duplicate of the same to the colonel of the regiment. Final statements of pay, clothing, &c., will be sent with the inventories. When a soldier dies at a post or station absent from his company, it will be the duty of his immediate commander to furnish the required inventory, and, at the same time, to forward to the commanding officer of the company to which the soldier belonged, a report of his death, specifying the date, place, and cause; to what time he was last paid, and the money or other effects in his possession at the time of his decease; which report will be noted on the next muster roll of the company to which the man belonged. Each inventory will be endorsed, "Inventory of the effects of ——— ———, late of company (—) ——— regiment of ———, who died at ———, the ——— day of ———, 186–." If a legal representative receive the effects, it will be stated in the report. If the soldier leave no effects, the fact will be reported.

Par. 153. Should the effects of a deceased non-commissioned officer or soldier not be administered upon within a short period after his decease, they shall be disposed of by a Council of Administration, under the authority of the commanding officer of the post, and the proceeds deposited with the Paymaster, to the credit of the United States, until they shall be claimed by the legal representatives of the deceased.

Par. 154. In all such cases of sales by the Council of Administration, a statement in detail, or account of the proceeds, duly certified by the Council and commanding officer, accompanied by the Paymaster's receipt for the proceeds, will be forwarded by the commanding officer to the Adjutant General. The statement will be endorsed, "Report of the proceeds of the effects of ——— ———, late of company (—) ——— regiment of ———, who died at ———, the —— day of ———, 186–."

NOTE 1.—The effects in all cases, when called for, should be turned over to the legal representative, without further authority from the Adjutant General. When the effects are turned over to the relatives of the deceased before these inventories are sent to the Adjutant General, their receipts therefor should be attached to the inventories. In all other cases, one copy will be sent with a letter of transmittal direct to the Adjutant General, and a duplicate retained by the officer.

NOTE 2.—Particular care should be taken to take receipts in duplicate from the Paymaster for any funds turned over to him; one copy should be sent direct to the Adjutant General and one retained by the officer.

INVENTORY OF THE EFFECTS

OF

James Jay

Late of Company A

11th *Reg't of* M S C A V C

Volunteers, who died at Fort Jackson La

on the 9 *day of* September 1864.

ADJUTANT-GENERAL'S OFFICE RECEIVED JUL 6 1871

Inventory of the effects of James Fry late a Private of Captain Thomas W. Tarr's Company A of the 11th Regiment of U. S. C. H. Heavy, Volunteers, who was enrolled as a Private at Providence in the State of Rhode Island on the 20th day of August 1863, and mustered into the service of the United States as a Privat on the 28th day of August 1863, at Providence R.I. in Company A., 14th Regiment of Rhode Island Hy Artz Volunteers, to serve Three years or during the war; he was born in East Greenwich in the State of Rhode Island; he was 31 years of age, 5 feet 8 inches high, Mulatto complexion, Black eyes, Black hair, and by occupation, when enrolled, a Farmer; he died in Hospital, at Fort Jackson La. on the 9th day of September 1864, by reason of Congestive Fever

INVENTORY.

Articles.	No.	Articles.	No.	Articles.	No.
Hats		Pairs trowsers		Knapsacks	
Caps		Pairs flannel drawers			
Forage caps		Pairs cotton drawers			
Great coats		Flannel shirts			
Uniform coats		Cotton shirts			
Uniform jackets		Pairs boots			
Flannel sack coats		Pairs shoes			
Blouses		Pairs socks			
Stable frocks		Blankets			
Fatigue overalls		Haversacks			

Money.		
	Specie	$
	Notes	$

I certify, on honor, that the above inventory comprises all the effects of ....., deceased, and that the effects are in the hands of ..... at ..... to be disposed of by a Council of Administration.

.....

(DUPLICATES.)

Jno W Fry
Capt 11th R.I.H.A.

Commanding the Company.

Station: Fort Jackson La.

Date: September 9th 1864

[A. G. O. No. 104.]

19
3d " 2d—1864.

FINAL STATEMENT

OF

Private James Fry

11th Reg't of M. S. C. A. F. C.

VOLUNTEERS.

NOTE 1.—*Two* of these certificates (or duplicates) are to be given to each Volunteer Soldier or drafted man who may be discharged previously to the discharge of his company, that he may at once receive from the Paymaster the pay, &c., due him, and the captain or other COMMISSIONED officer commanding the company will certify to the act of the delivery of the duplicate certificates; on these certificates the Soldier is "entitled to" his *discharge*, and should also present his discharge to the Paymaster to have the payment endorsed on it. The discharge is to be given back to the Soldier by the Paymaster; the latter only retaining as his voucher the duplicate certificates.

NOTE 2.—If the Soldier is entitled to pay for the use of his horse, the Company Commander will certify to that fact on the back of both these final statements, and also to the time he has pay due for having been so mounted on his own horse.

NOTE 3.—When a Soldier is furnished with final statements, his descriptive list, if he has one, should be taken up by the officer who gives the Soldier these statements, and endorsed with a statement to this effect by the officer. This endorsement should exhibit a full statement of the time for which the Soldier was allowed pay on his final statements, the clothing account, and all other charges against him or in his favor, so as to comprise a complete exhibit of his account. It will then be transmitted to the company commander of the Soldier, who will enter all the data necessary to a full understanding of the Soldier's account on the muster roll upon which the Soldier's discharge is reported. The descriptive list will then be destroyed. The object of this is, that the remaining portion of the Soldier's account may be settled upon the receipt of these muster rolls, and the Soldier receive any pay or allowances that may be due him at the time of his discharge, and which may not appear on his final statements from the fact that his descriptive list is incomplete. These accounts for back pay, &c., are settled by the 2d Auditor of the Treasury Department.

NOTE 4.—Charges for loss or injury to ordnance, horse equipments, and other miscellaneous charges, should appear under the heading of "Other Stoppages."

NOTE 5.—Bounty paid by State authorities, and not by the United States, will not be entered on this statement.

NOTE 6.—Amounts due the Sutler and Laundress must be entered on the muster roll on which the discharge, death, desertion, &c., is reported, as well as on the final statement, otherwise the amount cannot be collected from the United States.

NOTE 7.—This blank will be used for deceased volunteers and drafted men, as well as for others.

NOTE 8.—Where a Soldier dies in Hospital or on detached service, his descriptive list, if he has one, should be sent with his final statements, in duplicate, to the Second Auditor, Washington, D. C.

RECEIVED Jul 6 1871 AUDITOR

1864

I certify, on honor, that James Fry a Private of Captain Thomas W. Ray's Company (A) of the 11th Regiment of U.S.C.H.A. Heavy VOLUNTEERS, of the State of Rhode Island, born in East Greenwich, State of Rhode Island, aged 21 years; 5 feet 6 inches high; Mulatto complexion, Black eyes, Black hair, and by occupation a Farmer, having joined the company on its original organization at Providence R.I., and enrolled in it at the muster into the service of the United States at Providence R.I., on the 28th day of August, 1863, (or was mustered in service as a recruit, by × × × , at ×, on the × day of ×, 186 , or was drafted and mustered into the service of the United States from the × Enrollment District of the State of ×, at ×, on the × day of ×, 186 ,) to serve in the Regiment, for the term of Three Years: and having served HONESTLY and FAITHFULLY with his Company in 11th U.S.C.H.A. Heavy to the present date, is now entitled to a DISCHARGE by reason of Death in Consequence of Congestive Fever

The said James Fry never was last paid by Paymaster to include the day of , 186 , and has pay due him from that time to the present date; he is entitled to pay and subsistence for TRAVELING to place of enrollment, and whatever other allowances are authorized to volunteer soldiers, drafted men, or militia, so discharged. He has received from the United States CLOTHING amounting to Sixty Three 89/100 dollars, since the 20th day of August, 1863, when his clothing account was last settled. He has received from the United States 00/100 dollars advanced BOUNTY.

There is to be stopped from him, on account of the State of , or other authorities, for CLOTHING, &c., received on entering service, 00/100 dollars; and for other stoppages, viz: No Effects

00/100 dollars.

He has been furnished with TRANSPORTATION in kind from the place of his discharge to ; and he has been SUBSISTED for TRAVELING to his place of enrollment, up to the , 186 .

He is indebted to , SUTLER, 00/100 dollars.

He is indebted to , LAUNDRESS, 00/100 dollars.

Given in Duplicate, at Fort Jackson La., this 9th day of September, 1864.

Thos W Ray
Capt 11th U.S.C.H.A.
Commanding Company.

A. G. O. No. 95—First.]

FINAL STATEMENT

OF

James Finn

11th Reg't of M S H A 76

Co. I

VOLUNTEERS.

Dude Dept 9" 1864

NOTE 1.—*Two* of these certificates (or duplicates) are to be given to each Volunteer Soldier or drafted man who may be discharged previously to the discharge of his company, that he may at once receive from the Paymaster the pay, &c., due him, and the captain or other COMMISSIONED officer commanding the company will certify to the act of the delivery of the duplicate certificates; on these certificates the Soldier is "entitled to" his *discharge*, and should also present his discharge to the Paymaster to have the payment endorsed on it. The discharge is to be given back to the Soldier by the Paymaster; the latter only retaining as his voucher the duplicate certificates.

NOTE 2.—If the Soldier is entitled to pay for the use of his horse, the Company Commander will certify to that fact on the back of both these final statements, and also to the time he has pay due for having been so mounted on his own horse.

NOTE 3.—When a Soldier is furnished with final statements, his descriptive list, if he has one, should be taken up by the officer who gives the Soldier these statements, and endorsed with a statement to this effect by the officer. This endorsement should exhibit a full statement of the time for which the Soldier was allowed pay on his final statements, the clothing account, and all other charges against him or in his favor, so as to comprise a complete exhibit of his account. It will then be transmitted to the company commander of the Soldier, who will enter all the data necessary to a full understanding of the Soldier's account on the muster roll upon which the Soldier's discharge is reported. The descriptive list will then be destroyed. The object of this is, that the remaining portion of the Soldier's account may be settled upon the receipt of these muster rolls, and the Soldier receive any pay or allowances that may be due him at the time of his discharge, and which may not appear on his final statements from the fact that his descriptive list is incomplete. These accounts for back pay, &c., are settled by the 2d Auditor of the Treasury Department.

NOTE 4.—Charges for loss or injury to ordnance, horse equipments, and other miscellaneous charges, should appear under the heading of "Other Stoppages."

NOTE 5.—Bounty paid by State authorities, and not by the United States, will not be entered on this statement.

NOTE 6.—Amounts due the Sutler and Laundress must be entered on the muster roll on which the discharge, death, desertion, &c., is reported, as well as on the final statement, otherwise the amount cannot be collected from the United States.

NOTE 7.—This blank will be used for deceased volunteers and drafted men, as well as for others.

NOTE 8.—Where a Soldier dies in Hospital or on detached service, his descriptive list, if he has one, should be sent with his final statements, in duplicate, to the Second Auditor, Washington, D. C.

ADJUTANT GENERAL'S OFFICE.
Sept 24" 1864.
Duplicate with Inventory sent 2d Auditor.

ADJUTANT GEN'LS OFFICE. RECEIVED. SEPT 24 1864

I certify, on honor, that James Fry a Private of Captain Thomas W. Frey's Company (A.) of the 11th Regiment of U. S. C. Art'y Heavy VOLUNTEERS, of the State of Rhode Island, born in East Greenwich, State of Rhode Island, aged 21 years; 5 feet 8 inches high; Mulatto complexion, Black eyes, Black hair, and by occupation a Farmer, having joined the company on its original organization at Providence R.I., and enrolled in it at the muster into the service of the United States at Providence R.I, on the 28th day of August, 1863, (or was mustered in service as a recruit, by _____, at _____, on the _____ day of _____, 186 , or was drafted and mustered into the service of the United States from the _____ Enrollment District of the State of _____, at _____, on the _____ day of _____, 186 ,) to serve in the Regiment, for the term of Three Years: and having served HONESTLY and FAITHFULLY with his Company in 11th U. S. C. Art'y Heavy to the present date, is now entitled to a DISCHARGE by reason of Death, in consequence of Congestive Fever (Med. Dept. P.M. 18th Dec. Savannah)

The said James Fry never was ~~last~~ paid by Paymaster _____ to include the _____ day of _____, 186 , and has pay due him from that time to the present date; he is entitled to pay and subsistence for TRAVELING to place of enrollment, and whatever other allowances are authorized to volunteer soldiers, drafted men, or militia, so discharged. He has received from the United States CLOTHING amounting to Eighty Three 83/100 dollars, since the 20th day of August, 1863, when his clothing account was last settled. He has received from the United States _____ 100 dollars advanced BOUNTY.

There is to be stopped from him, on account of the State of _____, or other authorities, for CLOTHING, &c., received on entering service, _____ 100 dollars; and for other stoppages, viz: _____

_____ 100 dollars.

He has been furnished with TRANSPORTATION in kind from the place of his discharge to _____; and he has been SUBSISTED for TRAVELING to his place of enrollment, up to the _____, 186 .

He is indebted to _____, SUTLER, _____ 100 dollars.

He is indebted to _____, LAUNDRESS, _____ 100 dollars.

Given in Duplicate, at Fort Jackson La., this 9th day of September, 1864.

Thos W. Frey
Capt 11th U.S.C.A.H.A.
Commanding Company.

A. G. O. No. 95—First.]

Co. F, 11 U.S.Col'd H.Art'y.

Private	Private

CARD NUMBERS.

1	6181353	26	
2	6181390	27	
3	6191974	28	
4	6192106	29	
5	6192235	30	
6	6192358	31	
7	9125128	32	
8		33	
9		34	
10		35	
11		36	
12		37	
13		38	
14		39	
15		40	
16		41	
17		42	
18		43	
19		44	
20		45	
21		46	
22		47	
23		48	
24		49	
25		50	

Book Mark:

See also

P 2332810 Brown

J. D. Marks
Ex,

F | 11 H. Art'y. | U.S.C.T.

John Fry

, Co. F, 11 Reg't U. S. Col'd H. Art'y.

Appears on

Company Descriptive Book

of the organization named above.

DESCRIPTION.

Age 30 years; height 5 feet 6 inches.

Complexion Dark.

Eyes Black; hair Black.

Where born Warwick, Rhode Island.

Occupation Hostler.

ENLISTMENT.

When Feb. 18, 186 5.

Where Prov. R. I.

By whom A. B. Chadsey; term 1 y'rs.

Remarks: joined the Company as recruit April 14, 1865 by S. Orders No. 12 & 11 from H.Q. 2d Regt. of April 14, 1865.

O. J. Markle.

Copyist.

(383v)

I. | 11 H. Art'y. | U.S.C.T.

John Fry

Appears with rank of Pvt on

Muster and Descriptive Roll of a Detachment of U. S. Vols. forwarded

for the 11 Reg't U.S.H.Arty. Roll dated

Providence R.I., Feb 24, 1865.

Where born Warwick R. I.

Age 30 y'rs; occupation Hostler

When enlisted Feb 16, 1865.

Where enlisted Providence RI

For what period enlisted 1 years.

Eyes Blk; hair Blk

Complexion dark; height 5 ft. 6 in.

When mustered in Feb 16, 1865.

Where mustered in Prov. R.I.

Bounty paid $ 33 1/3/100; due $ 66 2/3/100

Where credited Town East Greenwich

1st Sub. Dist. 2 Cong Dist. R.I.

Company to which assigned

Remarks: Recruits entitled to Bounty

Book mark:

Copyist.

For | 11 H. Art'y. | U.S.C.T.

John Fry

Appears with rank of Pvt on

Muster and Descriptive Roll of a Detachment of U. S. Vols. forwarded

for the 11 Reg't U.S. Art. Roll dated

New Haven Conn, Mch 27, 1865.

Where born Warwick R. I.

Age 20 y'rs; occupation Hostler

When enlisted Feby 16, 1865.

Where enlisted Providence R.I.

For what period enlisted 1 years.

Eyes Blk; hair Blk

Complexion dark; height 5 ft. 6 in.

When mustered in Feb 16, 1865.

Where mustered in Providence R.I.

Bounty paid $ 33 33/100; due $ 00/100

Where credited East Greenwich R.I.

Company to which assigned

Remarks:

Book mark:

Clerk

Copyist.

F | 11 H. Art'y. | U.S.C.T.

John Fry.

Pvt., Co. F, 11 Reg't U. S. Col'd H. Art'y.

Appears on

Company Muster Roll

for Mar. and April, 1865.

Present or absent Present.

Stoppage, $ 100 for

Due Gov't, $ 100 for

Valuation of horse, $ 100

Valuation of horse equipments, $ 100

Remarks: Joined a recruit April 14/65. Received $33⅓ U.S. bounty

Book mark:

Exline.

(358) *Copyist.*

F | 11 H. Art'y. | U.S.C.T.

John Fry

Pvt., Co. F, 11 Reg't U. S. Col'd H. Art'y.

Appears on

Company Muster Roll

for May & June, 1865.

Present or absent Present.

Stoppage, $ 100 for

Due Gov't, $ 100 for

Valuation of horse, $ 100

Valuation of horse equipments, $ 100

Remarks: Joined as Recruit April 14. Received $33.33 Bal. Bounty.

Book mark:

(358)

Copyist.

F. | 11 H. Art'y. | U.S.C.T.

John Fry

Sgt., Co. F, 11 Reg't U. S. Col'd H. Art'y.

Appears on

Company Muster Roll

for July & Aug., 1865.

Present or absent Present.

Stoppage, $ 100 for

Due Gov't, $ 100 for

Valuation of horse, $ 100

Valuation of horse equipments, $ 100

Remarks: Due $33.13, Second installment U.S. Bounty. Stop. for C & E. Equipage 0.65

Book mark:

(358) Copyist.

F. | 11 H. Art'y. | **U.S.C.T.**

John Fay

Bit., Co. F, 11 Reg't U. S. Col'd H. Art'y.

Appears on **Co. Muster-out Roll,** dated New Orleans La. Oct. 7, 1865.

Muster-out to date Oct. 2, 1865.

Last paid to June 30, 1865.

Clothing account:

Last settled ....., 186 ; drawn since $ 100

Due soldier $ 1 47/100; due U. S. $ 100

Am't for cloth'g in kind or money adv'd $ 100

Due U. S. for arms, equipments, &c., $ 7.15/100

Bounty paid $ 33 1/3 100; due $ 33 1/3 100

Remarks: Joined a recruits stock for one musket Haccets, retained and one Canteen, for which cash.

Book mark:

(361) Copyist.

Fry, John

, , 11 Reg't U.S.C.H.A.

2 Enclosures.

Bed Cards	Final Statements
Burial Records	Furloughs or L. of A
Certs. of Dis. for Discharge	Med. Certificates
C. M. Charges	Med. Des. Lists
Descriptive Lists	Orders
Discharge Certificates	Pris. of War Record
Enlistment Papers 2	Resignations

Other papers relating to—

Admission to Hosp'l	Furlough or L. of A
Casualty Sheet	Med. Examination
Confinement	Misc. Information
Contracts	Pay or Clothing
Death or Effects	Personal Reports
Desertion	Rank
Discharge from Hosp'l	Transfer to Hosp'l
Discharge from Service	Transfer to V. R. C.
Duty	Transportation

NOTE 1.—This blank will be used for both enlistments and re-enlistments—enlistment of veterans, &c., in the volunteer service. They will be made out in duplicate in all cases—one to accompany the recruiting return of the superintendent (not the recruiting officer) to the Adjutant General, and one to accompany the accounts of the officer who pays bounty, &c. The Regiment and Company in which the soldier last served should be given on the back.

NOTE 2.—An enlistment holds to service. A muster-in must, in all cases, precede payment of pay, bounty, pension, &c. A muster-in roll must, in all cases, be filed in the Adjutant General's Office as evidence of muster-in. The mustering officer, commissary, or assistant commissary of musters, as the case may be, will countersign both enlistments as having mustered the soldier into the service of the United States before either of them is given to the disbursing officer.

DECLARATION OF RECRUIT.

I, John Fry, desiring to VOLUNTEER as a Soldier in the **Army of the United States**, for the term of ~~three~~ one YEARS, **Do Declare**, That I am 30 years and ..... months of age; that I have never been discharged from the United States service on account of disability or by sentence of a court martial, or by order before the expiration of a term of enlistment; and I know of no impediment to my serving honestly and faithfully as a soldier for ~~three~~ one year.

GIVEN at Syracuse NY

the 18th day of Aby 1865

Witness:

C J Mussey

his
John X Fry
mark

11th U. S. Col'd. Inf'y.

No. 296

John Fry

Volunteered at Syracuse

Onondaga 18 Co. 4 1865

By Capt Chas Mussey

To 4th Regiment of U.S.C. Inf'y

enlistment; last served in Company ( )

Reg't of .....

Discharged .....

Recruits for Capt Mussey

of Capt Gunnison, 14th Sub-Dist

2nd Brig. Dist N. Y.

JUN 11 1865

CONSENT IN CASE OF MINOR.

I, ..., DO CERTIFY, That I am the ..... of ..... ; that the said ..... is ..... years of age; and I do hereby freely give my CONSENT to his volunteering as a SOLDIER in the ARMY OF THE UNITED STATES for the period of THREE YEARS.

GIVEN at .....

the ..... day of .....

Witness:

.....

.....

(A. G. O. No. 74 & 76.)

VOLUNTEER ENLISTMENT.

STATE OF Rhode Island TOWN OF Providence

I, John Fry, born in Danish in the State of RI, aged 30 years, and by occupation a Hostler, DO HEREBY ACKNOWLEDGE to have volunteered this 18th day of July, 1865, to serve as a ***Soldier*** in the **Army of the United States of America,** for the period of ~~THREE~~ one *YEARS*, unless sooner discharged by proper authority: Do also agree to accept such bounty, pay, rations, and clothing, as are, or may be, established by law for volunteers. And I, John Fry, do solemnly swear, that I will bear true faith and allegiance to the ***United States of America,*** and that I will serve them honestly and faithfully against all their enemies or opposers whomsoever; and that I will observe and obey the orders of the President of the United States, and the orders of the officers appointed over me, according to the Rules and Articles of War.

Sworn and subscribed to, at Providence RI this 18th day of July, 1865, BEFORE Chas J Wheeler Justice of the Peace

his
John X Fry
mark

I CERTIFY, ON HONOR, That I have carefully examined the above-named Volunteer, agreeably to the General Regulations of the Army, and that, in my opinion, he is free from all bodily defects and mental infirmity, which would in any way disqualify him from performing the duties of a soldier.

F K Peckham
2d Dist R.I.

EXAMINING SURGEON.

I CERTIFY, ON HONOR, That I have minutely inspected the Volunteer John Fry previously to his enlistment, and that he was entirely sober when enlisted; that, to the best of my judgment and belief, he is of lawful age; and that, in accepting him as duly qualified to perform the duties of an able-bodied soldier, I have strictly observed the Regulations which govern the recruiting service. This soldier has ~~Black~~ Black *eyes,* ~~Black~~ Black *hair,* ~~Light~~ Dark *complexion,* is 5 *feet* 6 *inches* high.

S B Chadsey
Capt 1st Regiment of Mad Volunteers,
2d Dist RI
RECRUITING OFFICER.

(A. G. O. No. 71 & 76.)

Mustered into the service of the United States, for ~~three~~ one years or during the war, from date of enlistment, in Company ~~Regiment~~ of the 1st Regt Cavy Volunteers, on the 1st day of July, 1865, at Providence RI

Entitled to Bounty.

S B Chadsey
Capt 1st Regt Cavy
2d Dist RI

DECLARATION OF RECRUIT.

I, John Fry, desiring to VOLUNTEER as a Soldier in the **Army of the United States**, for the term of ~~THREE~~ one YEARS, **Do Declare**, That I am 30 years and ..... months of age; that I have never been discharged from the United States service on account of disability or by sentence of a court martial, or by order before the expiration of a term of enlistment; and I know of no impediment to my serving honestly and faithfully as a soldier for ~~three~~ one years.

GIVEN at Providence R.I.

the 18th day of July 1865

Witness: C J Wheeler

John his X mark Fry

No. D967

John Fry

Volunteered at Providence R.I.

February 18th, 1865

By Capt C B Chadsey

11th Regiment of U.S. Col. Cavy

..... enlistment; last served in Company ( )

..... Reg't of .....

Discharged ....., 18 .

2550

Credited to the Town of East Greenwich, 14th Sub-Dist. 2nd Cong Dist. R.I.

JUL 11 1871 REGISTRAR-ADJUTANT

CONSENT IN CASE OF MINOR.

I, ..., DO CERTIFY, That I am the ..... of ..... ; that the said ..... is ..... years of age; and I do hereby freely give my CONSENT to his volunteering as a SOLDIER in the ARMY OF THE UNITED STATES for the period of THREE YEARS.

GIVEN at .....

the ..... day of .....

Witness: .....

(A. G. O. No. 74 & 76.)

NOTE 1.—This blank will be used for both enlistments and re-enlistments—enlistment of veterans, &c., &c., in the volunteer service. They will be made out in duplicate in all cases—one to accompany the recruiting return of the superintendent (not the recruiting officer) to the Adjutant General, and one to accompany the accounts of the officer who pays bounty, &c. The Regiment and Company in which the soldier last served should be given on the back.

NOTE 2.—An enlistment holds to service. A muster-in must, in all cases, precede payment of pay, bounty, pension, &c. A muster-in roll must, in all cases, be filed in the Adjutant General's Office as evidence of muster-in. The mustering officer, commissary, or assistant commissary of musters, as the case may be, will countersign both enlistments as having mustered the soldier into the service of the United States before either of them is given to the disbursing officer.

VOLUNTEER ENLISTMENT.

STATE OF Rhode Island TOWN OF Portsmouth

I, John Fry, born in Warwick
in the State of RI, aged 30 years,
and by occupation a Porter, DO HEREBY ACKNOWLEDGE to have
volunteered this 18th day of Feby, 1865,
to serve as a **Soldier** in the **Army of the United States of America**, for
the period of ~~THREE~~ one YEAR, unless sooner discharged by proper authority:
Do also agree to accept such bounty, pay, rations, and clothing, as are, or may be,
established by law for volunteers. And I, John Fry, do
solemnly swear, that I will bear true faith and allegiance to the ***United States of America***, and that I will serve them honestly and faithfully against all
their enemies or opposers whomsoever; and that I will observe and obey the
orders of the President of the United States, and the orders of the officers
appointed over me, according to the Rules and Articles of War.

Sworn and subscribed to, at Portsmouth RI
this 18th day of Feby, 1865,
BEFORE Chas J Wheeler
Justice of the Peace

his
John x Fry
mark

I CERTIFY, ON HONOR, That I have carefully examined the above-named Volunteer, agreeably to the General Regulations of the Army, and that, in my opinion, he is free from all bodily defects and mental infirmity, which would in any way disqualify him from performing the duties of a soldier.

F. H. Peckham
2d Asst R O
EXAMINING SURGEON.

I CERTIFY, ON HONOR, That I have minutely inspected the Volunteer John Fry previously to his enlistment, and that he was entirely sober when enlisted; that, to the best of my judgment and belief, he is of lawful age; and that, in accepting him as duly qualified to perform the duties of an able-bodied soldier I have strictly observed the Regulations which govern the recruiting service. This soldier has ~~Black~~ Black *eyes*, Black *hair*, ~~Dark~~ Dark *complexion*, is 5 *feet* 6 *inches* high.

A. B. Chaddock
Capt 2d Regiment of Mar Volunteers.
2d Brig RI
RECRUITING OFFICER.

(A. G. O. No. 71 & 76.)

Mustered into the service of the United States, for ~~three~~ one years or during the war, from date of enlistment, in Company ....
..... Regiment of Lt Col Duty Volunteers, on the 18th day of Feby, 1865, at Portsmouth
Certified & Pd
Capt 2d Regt Mar Vols
2d Brig RI

U.S. Military

Private	Sergeant

CARD NUMBERS.

1 6187216	26
2 6187324	27
3 6187471	28
4 6187618	29
5 6187761	30
6 6188012	31
7 6188841	32
8 9124564	33
9 9124717	34
10	35
11	36
12	37
13	38
14	39
15	40
16	41
17	42
18	43
19	44
20	45
21	46
22	47
23	48
24	49
25	50

Book Mark:

See also

I | 11 H. Art'y. | U.S.C.T.

J. Lewis Fry

, Co. D, 11 Reg't U. S. Col'd H. Art'y.

Appears on

Company Descriptive Book

of the organization named above.

DESCRIPTION.

Age 26 years; height 5 feet 4½ inches.

Complexion Blk.

Eyes Brown; hair Blk.

Where born Reading, Penn.

Occupation Writer.

ENLISTMENT.

When Sept. 16, 186 .

Where Erie.

By whom W. D. Haines; term 3 y'rs.

Remarks: Promoted to be Sergeant Oct. 5, 1863. Died at Fort Jackson, Aug. 27, 1864 of Intermittent Fever.

O. J. Markle.

(3567) Copyist.

F. | 11 H. Art'y. | U.S.C.T.

Lewis J. Fry

....., Co. D....., 11 Reg't U. S. Col'd H. Art'y.

Appears on

Company Descriptive Book

of the organization named above.

DESCRIPTION.

Age 26 years; height 5 feet 4½ inches.

Complexion Black

Eyes Brown; hair Black

Where born Reading, Penn.

Occupation Waiter.

ENLISTMENT.

When Sept. 15, 1863.

Where Prov. R. I.

By whom H. H. Helme; term 3 y'rs.

Remarks: Promoted to Sergt. Oct. 5, 1863. Appointed Act. Serg. Major of 1st Batt. per S. O. No. 1 Hd. Qrs 1st Batt. 14 R. I. H. A. Dutch Island Dec. 9, 1863. Died at Ft. Jackson, La, Aug. 27, 1864. Cause "Intermittent Fever." Final Statements and Inventory Effects forwd Aug. 30, 1864.

O. J. Markle,

(3830) Copyist.

F | 11 H. Art'y. | U.S.C.T.

Lewis L. Fry

Pvt., Co. D, 14 Reg't R. I. Col'd H. Art'y.*

Age 26 years.

Appears on

Company Muster-in Roll

of the organization named above. Roll dated Providence R. I., Sept. 22, 1863.

Muster-in to date Sept. 22, 1863.

Joined for duty and enrolled:

When Sept. 15, 186 .

Where Prov. R. I.

Period 3 years.

Valuation of horse, $ 100

Valuation of horse equipments, $ 100

Remarks: Residence Penn.

* This organization subsequently became Co. D, 11 Reg't U. S. Colored Heavy Artillery.

Book mark:

Lewis

F | 11 H. Art'y. | U.S.C.T.

Lewis Fry

Sgt., Co. D, 14 Reg't R. I. Col'd H. Art'y.*

Appears on

Company Muster Roll

for Sept. 22 to Dec. 31, 1863.

Present or absent Present

Stoppage, $.....100 for .....

.....

Due Gov't, $.....100 for .....

.....

Valuation of horse, $.....100

Valuation of horse equipments, $.....100

Remarks: Promoted to 1st Sgt.
Oct. 5th 1863
Acting Sergt. Major

.....

*This organization subsequently became Co. D, 11 Reg't U. S. Col'd Heavy Artillery.

Book mark:.....

Lewis

Copyist.

F | **11 H. Art'y.** | **U.S.C.T.**

Lewis Fox

Lieut., Co. D, 14 Reg't R. I. Col'd H. Art'y.*

Appears on

Company Muster Roll

for Sept. 22/63 to Feb. 29, 1864.

Present or absent Present

Stoppage, $.....100 for .....

.....

.....

Due Gov't, $.....100 for .....

.....

Valuation of horse, $.....100

Valuation of horse equipments, $.....100

Remarks: Promoted to 1st Lieut. Oct. 5/63. Appointed Act. Aid. Major Dec. 9th

.....

.....

.....

.....

*This organization subsequently became Co. D, 11 Reg't U. S. Col'd Heavy Artillery.

Book mark: .....

(358) Lewis *Copyist.*

7. | 11 H. Art'y. | U.S.C.T.

Lewis Fry

~~Sergt~~ Co. D, 8 Reg't U. S. Col'd H. Art'y.*

Appears on

Company Muster Roll

for Mar & Apr, 1864.

Present or absent present

Stoppage, $ 100 for

Due Gov't, $ 100 for

Valuation of horse, $ 100

Valuation of horse equipments, $ 100

Remarks: Promoted to Sergt Oct 5th 1863
Appointed Acting Sergt. Major
Dec 9th 1863

*This organization subsequently became Co. C, 11 Reg't U. S. Colored Heavy Artillery.

Book mark:

Wm Callen

(358) *Copyist.*

F

11 H. Art'y. | U.S.C.T.

Louis Fry

Sergt, Co. D, 8 Reg't U. S. Col'd H. Art'y.*

Appears on

Company Muster Roll

for May & June, 1864.

Present or absent present

Stoppage, $ 100 for

Due Gov't, $ 100 for

Valuation of horse, $ 100

Valuation of horse equipments, $ 100

Remarks: Promoted to be Sergt. Oct 15. 1863

† This organization subsequently became Co. D, 11 Reg't U. S. Colored Heavy Artillery.

Book mark:

Wm L Allen

Copyist.

F | 11 H. Art'y. | U.S.C.T.

Louis J Fry

Sergt, Co. D, 11 Reg't U. S. Col'd H. Art'y.

Appears on

Company Muster Roll

for July & Aug, 1864

Present or absent

Stoppage, $ 3 67/100 for Ord Stores

Due Gov't, $ 100 for

Valuation of horse, $ 100

Valuation of horse equipments, $ 100

Remarks: Died at Fort Jackson La Aug 27/64 Final Statement forwarded

Book mark:

Buddle

(358) *Copyist.*

4 | 11 H. Art'y. | U.S.C.T.

Lewis L. Fry,

Sergt., Co. L, 11 Reg't U. S. Col'd H. Art'y.

Appears on **Co. Muster-out Roll,** dated

New Orleans, La., Oct. 2, 1865.

Muster-out to date ....., 186 .

Last paid to ....., 186 .

Clothing account:

Last settled....., 186 ; drawn since $.....100

Due soldier $.....100; due U. S. $.....100

Am't for cloth'g in kind or money adv'd $.....100

Due U. S. for arms, equipments, &c., $.....100

Bounty paid $.....100; due $.....100

Remarks: Joined at Ogle. Ogn.
Private to Oct. 5, 1863.
Died at F. t. Jackson. La.
Aug. 27, 1864, Final
Statements sent,
Free Ofr. 19/61

Book mark: V. 116, P. 161, 79.

C. F. Thompson.

(361) *Copyist.*

Pvt Lewis A.

A, Co. 11, Reg't Mass Inf

5 Enclosures.

Bed Cards	Final Statements 3
Burial Records	Furloughs or L. of A.
Certs. of Dis. for Discharge	Med. Certificates
C. M. Charges	Med. Des. Lists
Descriptive Lists	Orders
Discharge Certificates	Pris. of War Record
Enlistment Papers 1	Resignations

Other papers relating to—

Admission to Hosp'l	Furlough or L. of A.
Casualty Sheet	Med. Examination
Confinement	Misc. Information
Contracts	Pay or Clothing
Death or Effects 1	Personal Reports
Desertion	Rank
Discharge from Hosp'l	Transfer to Hosp'l
Discharge from Service	Transfer to V. R. C.
Duty	Transportation

DECLARATION OF RECRUIT.

I, Lewis J. Fry desiring to VOLUNTEER as a Soldier in the *ARMY OF THE UNITED STATES*, for the term of three years do declare that I am 26 years and 3 months of age; that I have never been discharged from the United States service on account of disability or by sentence of a court martial, or by order, before the expiration of a term of enlistment; and I know of no impediment to my serving honestly and faithfully as a soldier for three years

Given at Pennsboro

The 15 day of September 1863

Witness:

Wm H. Holmes

Lewis J. Fry

No. 53

Lewis J. Fry

Volunteered at Pennsboro R.D.

September 15th 1863

By Wm H. Holmes

1st Lieut. 12th Regiment of W. Reserves

enlistment; last served in Company ( )

Reg't of

Discharged

18

RECEIVED
Jul 11 1871
ADJT GEN'S OFFICE

CONSENT IN CASE OF MINOR.

I, Do CERTIFY that I am the

of ; that the said

is years of age; and I do hereby freely give

my CONSENT to his volunteering as a SOLDIER in the ARMY OF THE UNITED STATES for the period of

Given at

The day of

Witness:

VOLUNTEER ENLISTMENT.

State of Rhode Island

Town of Providence

I, Lewis J Fay born in Reading Pa

in the State of Pennsylvania aged 26 years, and by occupation a Painter DO HEREBY ACKNOWLEDGE to have volunteered this 15 day of September 1863 to serve as a SOLDIER in the ARMY OF THE UNITED STATES OF AMERICA, for the period of 3 years, unless sooner discharged by proper authority: Do also agree to accept such bounty, pay, rations and clothing, as are, or may be, established, by law for volunteers. And I, Lewis J Fay do solemnly swear, that I will bear true faith and allegiance to the *United States of America*, and that I will serve them honestly and faithfully against all their enemies or opposers whomsoever; and that I will observe and obey the orders of the President of the United States, and the orders of the officers appointed over me, according to the Rules and Articles of War.

Sworn and Subscribed to, at Providence
this 15th day of Sept 1863. Lewis J. Fay.
BEFORE Theodore Bayer
Capt 7th Regt R.I. Vols

I CERTIFY, ON HONOR, That I have carefully examined the above-named Volunteer, agreeable to the General Regulations of the Army, and that, in my opinion, he is free from all bodily defects and mental infirmity, which would, in any way, disqualify him from performing the duties of a soldier.

W B Carpenter EXAMINING SURGEON.

I CERTIFY, ON HONOR, That I have minutely inspected the Volunteer, Lewis J Fay previously to his enlistment, and that he was entirely sober when enlisted; that to the best of my judgment and belief, he is of lawful age; and that, in accepting him as duly qualified to perform the duties of an able-bodied soldier, I have strictly observed the Regulations which govern the recruiting service. This soldier has Brown *eyes* Black *hair*, *complexion*, is Mulatto 5 *feet*, 5 7/8 *inches high*.

1st Colored *Regiment of* H Art, R I *Volunteers*,

Wm H White RECRUITING OFFICER.

FINAL STATEMENT

OF

Louis J Fry

Sr Reg't of Mus Cavalry

VOLUNTEERS.

Due Aug 27 1864
" Nu Effects

NOTE 1.—*Two* of these certificates (or duplicates) are to be given to each Volunteer Soldier or drafted man who may be discharged previously to the discharge of his company, that he may at once receive from the Paymaster the pay, &c., due him, and the captain or other COMMISSIONED officer commanding the company will certify to the act of the delivery of the duplicate certificates; on these certificates the Soldier is "entitled to" his *discharge*, and should also present his discharge to the Paymaster to have the payment endorsed on it. The discharge is to be given back to the Soldier by the Paymaster; the latter only retaining as his voucher the duplicate certificates.

NOTE 2.—If the Soldier is entitled to pay for the use of his horse, the Company Commander will certify to that fact on the back of both these final statements, and also to the time he has pay due for having been so mounted on his own horse.

NOTE 3.—When a Soldier is furnished with final statements, his descriptive list, if he has one, should be taken up by the officer who gives the Soldier these statements, and endorsed with a statement to this effect by the officer. This endorsement should exhibit a full statement of the time for which the Soldier was allowed pay on his final statements, the clothing account, and all other charges against him or in his favor, so as to comprise a complete exhibit of his account. It will then be transmitted to the company commander of the Soldier, who will enter all the data necessary to a full understanding of the Soldier's account on the muster roll upon which the Soldier's discharge is reported. The descriptive list will then be destroyed. The object of this is, that the remaining portion of the Soldier's account may be settled upon the receipt of these muster rolls, and the Soldier receive any pay or allowances that may be due him at the time of his discharge, and which may not appear on his final statements from the fact that his descriptive list is incomplete. These accounts for back pay, &c., are settled by the 2d Auditor of the Treasury Department.

NOTE 4.—Charges for loss or injury to ordnance, horse equipments, and other miscellaneous charges, should appear under the heading of "Other Stoppages."

NOTE 5.—Bounty paid by State authorities, and not by the United States, will not be entered on this statement.

NOTE 6.—Amounts due the Sutler and Laundress must be entered on the muster roll on which the discharge, death, desertion, &c., is reported, as well as on the final statement, otherwise the amount cannot be collected from the United States.

NOTE 7.—This blank will be used for deceased volunteers and drafted men, as well as for others.

NOTE 8.—Where a Soldier dies in Hospital or on detached service, his descriptive list, if he has one, should be sent with his final statements, in duplicate, to the Second Auditor, Washington, D. C.

JUL 6 1871

I certify, on honor, that Louis I. Fry a Sergeant of Captain Joel Metcalf's Company (D) of the 8th Regiment of R.I. Art. Hy VOLUNTEERS, of the State of R. I., born in Reading, State of Pennsylvania, aged 26 years; 5 feet 4½ inches high; Black complexion, Brown eyes, Black hair, and by occupation a Waiter, having joined the company on its original organization at Providence R.I., and enrolled in it at the muster into the service of the United States at Pro R.I., on the 22d day of September, 1863, (or was mustered in service as a recruit, by W. H. Holmes, at Pro R.I., on the 15th day of September 1863 or was drafted and mustered into the service of the United States from the Enrollment District of the State of , at , on the day of , 186 ,) to serve in the Regiment, for the term of Three Years: and having served HONESTLY and FAITHFULLY with his Company in U.S. Service to the present date, is now entitled to a DISCHARGE by reason of Death at Fort Jackson La Aug 29 1864 Intermittent Fever

The said Louis J Fry was last paid by Paymaster Never Paid to include the 15th day of September, 1863, and has pay due him from that time to the present date; he is entitled to pay and subsistence for TRAVELING to place of enrollment, and whatever other allowances are authorized to volunteer soldiers, drafted men, or militia, so discharged. He has received from the United States CLOTHING amounting to $ 76.49/100 dollars, since the 15th day of September, 186 , when his clothing account was last settled. He has received from the United States 00/100 dollars advanced BOUNTY.

There is to be stopped from him, on account of the State of , or other authorities, for CLOTHING, &c., received on entering service, 00/100 dollars; and for other stoppages, viz: Ordnance Stores lost $ 3.67/100

00/100 dollars.

He has been furnished with TRANSPORTATION in kind from the place of his discharge to ; and he has been SUBSISTED for TRAVELING to his place of enrollment, up to the , 186 .

He is indebted to , SUTLER, 00/100 dollars.

He is indebted to , LAUNDRESS, 00/100 dollars.

Given in Duplicate, at Fort Jackson La, this 29 day of August, 1864

Joel Metcalf Jr.
Capt 8th R.I. Art.y
Commanding Company.
Late 14th R.I. Inf.a

[A. G. O. No. 95—First.]

62
3 2 9 1864

FINAL STATEMENT

OF

Louis J Stiny

8th Reg't of USC Cavalry

VOLUNTEERS.

NOTE 1.—*Two* of these certificates (or duplicates) are to be given to each Volunteer Soldier or drafted man who may be discharged previously to the discharge of his company, that he may at once receive from the Paymaster the pay, &c., due him, and the captain or other COMMISSIONED officer commanding the company will certify to the act of the delivery of the duplicate certificates; on these certificates the Soldier is "entitled to" his *discharge*, and should also present his discharge to the Paymaster to have the payment endorsed on it. The discharge is to be given back to the Soldier by the Paymaster; the latter only retaining as his voucher the duplicate certificates.

NOTE 2.—If the Soldier is entitled to pay for the use of his horse, the Company Commander will certify to that fact on the back of both these final statements, and also to the time he has pay due for having been so mounted on his own horse.

NOTE 3.—When a Soldier is furnished with final statements, his descriptive list, if he has one, should be taken up by the officer who gives the Soldier these statements, and endorsed with a statement to this effect by the officer. This endorsement should exhibit a full statement of the time for which the Soldier was allowed pay on his final statements, the clothing account, and all other charges against him or in his favor, so as to comprise a complete exhibit of his account. It will then be transmitted to the company commander of the Soldier, who will enter all the data necessary to a full understanding of the Soldier's account on the muster roll upon which the Soldier's discharge is reported. The descriptive list will then be destroyed. The object of this is, that the remaining portion of the Soldier's account may be settled upon the receipt of these muster rolls, and the Soldier receive any pay or allowances that may be due him at the time of his discharge, and which may not appear on his final statements from the fact that his descriptive list is incomplete. These accounts for back pay, &c., are settled by the 2d Auditor of the Treasury Department.

NOTE 4.—Charges for loss or injury to ordnance, horse equipments, and other miscellaneous charges, should appear under the heading of "Other Stoppages."

NOTE 5.—Bounty paid by State authorities, and not by the United States, will not be entered on this statement.

NOTE 6.—Amounts due the Sutler and Laundress must be entered on the muster roll on which the discharge, death, desertion, &c., is reported, as well as on the final statement, otherwise the amount cannot be collected from the United States.

NOTE 7.—This blank will be used for deceased volunteers and drafted men, as well as for others.

NOTE 8.—Where a Soldier dies in Hospital or on detached service, his descriptive list, if he has one, should be sent with his final statements, in duplicate, to the Second Auditor, Washington, D. C.

1864

I certify, on honor, that Lewis J. Fry a Sergeant of Captain J. Metcalf Company (D.) of the 8 Regiment of U. S. C. Artly VOLUNTEERS, of the State of R. I., born in Reading, State of Penn'a, aged 26 years; 5 feet 4½ inches high; Blk complexion, Brn eyes, Blk hair, and by occupation a Waiter, having joined the company on its original organization at Pawt. R. I., and enrolled in it at the muster into the service of the United States at Pawt. R. I., on the 22d day of Sept, 186 3, (or was mustered in service as a recruit, by M. W. Welme, at Pawt. R. I., on the 15th day of Sept., 186 3, or was drafted and mustered into the service of the United States from the × Enrollment District of the State of ×, at ×, on the × day of ×, 186 ,) to serve in the Regiment, for the term of Three Years: and having served HONESTLY and FAITHFULLY with his Company in The field to the present date, is now entitled to a DISCHARGE by reason of Death at Fort Jackson La Augt 27. 1864 Intermittent Fever

The said Lewis J. Fry was last paid by Paymaster to include the 15th day of Sept, 186 3, and has pay due him from that time to the present date; he is entitled to pay and subsistence for TRAVELING to place of enrollment, and whatever other allowances are authorized to volunteer soldiers, drafted men, or militia, so discharged. He has received from the United States CLOTHING amounting to 76 49/100 dollars, since the 15th day of Sept, 186 3, when his clothing account was last settled. He has received from the United States × 100 dollars advanced BOUNTY.

There is to be stopped from him, on account of the State of ×, or other authorities, for CLOTHING, &c., received on entering service, × 100 dollars; and for other stoppages, viz: Ordnance Stores Lost

3 67/100 dollars.

He has been furnished with TRANSPORTATION in kind from the place of his discharge to ×; and he has been SUBSISTED for TRAVELING to his place of enrollment, up to the ×, 186 .

He is indebted to ×, SUTLER, × 100 dollars.

He is indebted to ×, LAUNDRESS, × 100 dollars.

Given in Duplicate, at Fort Jackson La, this 29 day of August, 1864

Jas Metcalf Jr.
Captain 8th U.S.C.A. Artly
Commanding Company.

[A. G. O. No. 95—First.]

V

FINAL STATEMENT

OF

Louis J Fry

1st Reg't of U.S. Cav Hy

1143,

VOLUNTEERS.

Died Aug 24th 1864

NOTE 1.—*Two* of these certificates (or duplicates) are to be given to each Volunteer Soldier or drafted man who may be discharged previously to the discharge of his company, that he may at once receive from the Paymaster the pay, &c., due him, and the captain or other COMMISSIONED officer commanding the company will certify to the act of the delivery of the duplicate certificates; on these certificates the Soldier is "entitled to" his *discharge*, and should also present his discharge to the Paymaster to have the payment endorsed on it. The discharge is to be given back to the Soldier by the Paymaster; the latter only retaining as his voucher the duplicate certificates.

NOTE 2.—If the Soldier is entitled to pay for the use of his horse, the Company Commander will certify to that fact on the back of both these final statements, and also to the time he has pay due for having been so mounted on his own horse.

NOTE 3.—When a Soldier is furnished with final statements, his descriptive list, if he has one, should be taken up by the officer who gives the Soldier these statements, and endorsed with a statement to this effect by the officer. This endorsement should exhibit a full statement of the time for which the Soldier was allowed pay on his final statements, the clothing account, and all other charges against him or in his favor, so as to comprise a complete exhibit of his account. It will then be transmitted to the company commander of the Soldier, who will enter all the data necessary to a full understanding of the Soldier's account on the muster roll upon which the Soldier's discharge is reported. The descriptive list will then be destroyed. The object of this is, that the remaining portion of the Soldier's account may be settled upon the receipt of these muster rolls, and the Soldier receive any pay or allowances that may be due him at the time of his discharge, and which may not appear on his final statements from the fact that his descriptive list is incomplete. These accounts for back pay, &c., are settled by the 2d Auditor of the Treasury Department.

NOTE 4.—Charges for loss or injury to ordnance, horse equipments, and other miscellaneous charges, should appear under the heading of "Other Stoppages."

NOTE 5.—Bounty paid by State authorities, and not by the United States, will not be entered on this statement.

NOTE 6.—Amounts due the Sutler and Laundress must be entered on the muster roll on which the discharge, death, desertion, &c., is reported, as well as on the final statement, otherwise the amount cannot be collected from the United States.

NOTE 7.—This blank will be used for deceased volunteers and drafted men, as well as for others.

NOTE 8.—Where a Soldier dies in Hospital or on detached service, his descriptive list, if he has one, should be sent with his final statements, in duplicate, to the Second Auditor, Washington, D. C.

ADJUTANT GENERAL'S OFFICE.
Sept 13th 1864
Duplicate with Inventory sent 2d Auditor.

RECEIVED
SEP 12
1864

I certify, on honor, that Lewis J. Fry a Sergeant of Captain J. Metcalf Company (D of the 8th Regiment of W. Fort'a Art. Hy VOLUNTEERS, of the State of R. I., born in Reading, State of Penna, aged 26 years; 5 feet 4½ inches high; Bch complexion, Brn eyes, Blk hair, and by occupation a Waiter, having joined the company on its original organization at Pmr. R. I., and enrolled in it at the muster into the service of the United States at Pmr. R. I., on the 20th day of Sept, 186 3 (or was mustered in service as a recruit, by W. H. Helme, at Pmr. R. I., on the 15 day of Sept., 186 3, or was drafted and mustered into the service of the United States from the × Enrollment District of the State of ×, at ×, on the × day of ×, 186 ,) to serve in the Regiment, for the term of three years: and having served HONESTLY and FAITHFULLY with his Company in the field to the present date, is now entitled to a DISCHARGE by reason of Death at Fort Jackson La Augt 27, 1864 Intermittent Fever

The said Lewis J. Fry was last paid by Paymaster to include the 15th day of Sept, 186 3, and has pay due him from that time to the present date; he is entitled to pay and subsistence for TRAVELING to place of enrollment, and whatever other allowances are authorized to volunteer soldiers, drafted men, or militia, so discharged. He has received from the United States CLOTHING amounting to 76 49/100 dollars, since the 1st day of Sept., 186 3, when his clothing account was last settled. He has received from the United States × 100 dollars advanced BOUNTY.

There is to be stopped from him, on account of the State of ×, or other authorities, for CLOTHING, &c., received on entering service, × 100 dollars; and for other stoppages, viz: Ordnance Stores Lost 36 7/100 dollars.

He has been furnished with TRANSPORTATION in kind from the place of his discharge to ; and he has been SUBSISTED for TRAVELING to his place of enrollment, up to the , 186 .

He is indebted to , SUTLER, × 100 dollars.

He is indebted to , LAUNDRESS, × 100 dollars.

Given in Duplicate, at Fort Jackson La, this 29 day of August, 186 4

Joe Metcalf Jr.
Captain 8th U.S.C.A. Hy
Commanding Company.
Lew 14 R.I.H.A. Cav

[A. G. O. No. 95—First.]

ARTICLES OF WAR.

ART. 95. When any non-commissioned officer or soldier shall die, or be killed in the service of the United States, the then commanding officer of the troop or company shall, in the presence of two other commissioned officers, take an account of what effects he died possessed of, above his arms and accoutrements, and transmit the same to the office of the Department of War, which said effects are to be accounted for, and paid to the representatives of such deceased non-commissioned officer or soldier. And in case any of the officers, so authorized to take care of the effects of deceased officers and soldiers, should, before they have accounted to their representatives for the same, have occasion to leave the regiment or post, by preferment or otherwise, they shall, before they be permitted to quit the same, deposit in the hands of the commanding officer, or of the assistant military agent, all the effects of such deceased non-commissioned officers and soldiers, in order that the same may be secured for, and paid to, their respective representatives.

ARMY REGULATIONS—EDITION OF 1861.

DECEASED SOLDIERS.

Par. 152. Inventories of the effects of deceased non-commissioned officers and soldiers, required by the 95th Article of War, will be forwarded to the Adjutant General, by the commander of the company to which the deceased belonged, and a duplicate of the same to the colonel of the regiment. Final statements of pay, clothing, &c., will be sent with the inventories. When a soldier dies at a post or station absent from his company, it will be the duty of his immediate commander to furnish the required inventory, and, at the same time, to forward to the commanding officer of the company to which the soldier belonged, a report of his death, specifying the date, place, and cause; to what time he was last paid, and the money or other effects in his possession at the time of his decease; which report will be noted on the next muster roll of the company to which the man belonged. Each inventory will be endorsed, "Inventory of the effects of ——— ———, late of company (—) ——— regiment of ———, who died at ———, the ——— day of ———, 186–." If a legal representative receive the effects, it will be stated in the report. If the soldier leave no effects, the fact will be reported.

Par. 153. Should the effects of a deceased non-commissioned officer or soldier not be administered upon within a short period after his decease, they shall be disposed of by a Council of Administration, under the authority of the commanding officer of the post, and the proceeds deposited with the Paymaster, to the credit of the United States, until they shall be claimed by the legal representatives of the deceased.

Par. 154. In all such cases of sales by the Council of Administration, a statement in detail, or account of the proceeds, duly certified by the Council and commanding officer, accompanied by the Paymaster's receipt for the proceeds, will be forwarded by the commanding officer to the Adjutant General. The statement will be endorsed, "Report of the proceeds of the effects of ——— ———, late of company (—) ——— regiment of ———, who died at ———, the —— day of ———, 186–."

NOTE 1.—The effects in all cases, when called for, should be turned over to the legal representative, without further authority from the Adjutant General. When the effects are turned over to the relatives of the deceased before these inventories are sent to the Adjutant General, their receipts therefor should be attached to the inventories. In all other cases, one copy will be sent with a letter of transmittal direct to the Adjutant General, and a duplicate retained by the officer.

NOTE 2.—Particular care should be taken to take receipts in duplicate from the Paymaster for any funds turned over to him; one copy should be sent direct to the Adjutant General and one retained by the officer.

INVENTORY OF THE EFFECTS

OF

Lewis J Fay

Late of Company D

1st *Reg't of* U.S. Cavalry

Volunteers, who died at Ft Jackson La

on the 27 *day of* August *186*4.

Inventory of the effects of Lewis J. Fry late a Sergeant of Captain Jas Metcalf Jr's Company D of the 8th Regiment of U.S. Col'd Art. Vy. Volunteers, who was enrolled as a Private at Pawtucket in the State of Rhode Island on the 15th day of September 1863, and mustered into the service of the United States as a Private on the 22d day of September 1863, at Pawtucket in Company D, 11th Regiment of R.I. H.A. Col'd Volunteers, to serve Three years or during the war; he was born in Reading in the State of Pennsylvania; he was 26 years of age, 5 feet 4 1/2 inches high, Blk complexion, Brown eyes, Blk hair, and by occupation, when enrolled, a Waiter; he died in Hospital, at Fort Jackson, La on the 29th day of August 1864, by reason of Intermittent Fever

INVENTORY.

Articles.	No.	Articles.	No.	Articles.	No.
Hats		Pairs trowsers		Knapsacks	
Caps		Pairs flannel drawers			
Forage caps		Pairs cotton drawers			
Great coats		Flannel shirts			
Uniform coats		Cotton shirts			
Uniform jackets		Pairs boots			
Flannel sack coats		Pairs shoes			
Blouses		Pairs socks			
Stable frocks		Blankets			
Fatigue overalls		Haversacks			

Money.		
	Specie	$
	Notes	$

I CERTIFY, ON HONOR, that the above inventory comprises all the effects of _____, deceased, and that the effects are in the hands of _____ at _____ to be disposed of by a Council of Administration.

(DUPLICATES.)

Jas Metcalf Jr's
Captain U.S.C.A. Vy
Commanding the Company.

STATION: Fort Jackson La

DATE: Aug 29th 1864

Lieut 11th R.I.H.A.

[A. G. O. No. 104.]

Co K, 11 U.S. Col'd H. Artly.

Female	Female

CARD NUMBERS.

1	6197872	26	
2	6198028	27	
3	6198176	28	
4	6198335	29	
5	6198492	30	
6	6198648	31	
7	6198794	32	
8	6198937	33	
9	6199161	34	
10	6181862	35	
11	6181872	36	
12	6199689	37	
13	91256225	38	
14		39	
15		40	
16		41	
17		42	
18		43	
19		44	
20		45	
21		46	
22		47	
23		48	
24		49	
25		50	

Book Mark:

See also

Ø 611045 ℗ 0.90

S-126035 3-~~80~~ - M4 mm

J. D. Mark

J. | 11 H. Art'y. | U.S.C.T.

Moses Fry

, Co. K, 11 Reg't U. S. Col'd H. Art'y.

Appears on

Company Descriptive Book

of the organization named above.

DESCRIPTION.

Age 24 years; height 5 feet 10 3/4 inches.

Complexion African

Eyes Blk; hair Blk

Where born Danville Ky

Occupation Laborer

ENLISTMENT.

When Dec 5, 186 .

Where Prov R.I.

By whom J. C. Engly; term 3 y'rs.

Remarks: deserted from Camp Parapet La Jan 12' 1865

Griffith

(383v) Copyist.

F | 11 H. Art'y. | U.S.C.T.

Moses Fry

Pt., Co. K, 14 Reg't R. I. Col'd H. Art'y.*

Age 24 years.

Appears on

Company Muster-in Roll

of the organization named above. Roll dated Cp nr. Providence R.I. Dec 17, 1863.

Muster-in to date Dec 17, 1863.

Joined for duty and enrolled:

When Dec 5, 1863.

Where Providence R.I.

Period 3 years.

Valuation of horse, $100

Valuation of horse equipments, $100

Remarks:

* This organization subsequently became Co. K, 11 Reg't U. S. Colored Heavy Artillery.

Book mark:

J. M. Stewart

Copyist.

9 | 11 H. Art'y. | U.S.C.T.

Moses Fry

Pt., Co. K, 14 Reg't R. I. Col'd H. Art'y.*

Appears on

Company Muster Roll

for Dec 17 & Dec 31, 1863.

Present or absent Present

Stoppage, $ ---- 100 for ----

Due Gov't, $ ---- 100 for ----

Valuation of horse, $ ---- 100

Valuation of horse equipments, $ ---- 100

Remarks: ----

*This organization subsequently became Co. K, 11 Reg't U. S. Colored Heavy Artillery.

Book mark: ----

J. W. Seward

(358) *Copyist.*

I | 11 H. Art'y. | U.S.C.T.

Moses Fry

Pt, Co. K, 14 Reg't R. I. Col'd H. Art'y.*

Appears on

Company Muster Roll

for Jan & Feb, 1864.

Present or absent Present

Stoppage, $ 100 for

Due Gov't, $ 100 for

Valuation of horse, $ 100

Valuation of horse equipments, $ 100

Remarks:

*This organization subsequently became Co. K, 11 Reg't U. S. Colored Heavy Artillery.

Book mark:

J. W. Stewart

 Copyist.

F | 11 H. Art'y. | U.S.C.T.

Moses Fry

Pt, Co. K, 14 Reg't R. I. Col'd H. Art'y.*

Appears on

Company Muster Roll

for Mch & Apl, 1864.

Present or absent Present

Stoppage, $ 100 for

Due Gov't, $ 100 for

Valuation of horse, $ 100

Valuation of horse equipments, $ 100

Remarks:

*This organization subsequently became Co. K, 11 Reg't U. S. Colored Heavy Artillery.

Book mark:

J. H. Stewart

K | 11 H. Art'y. | U.S.C.T.

Rozzell

Pvt., Co. K, 8 Reg't U. S. Col'd H. Art'y.*

Appears on

Company Muster Roll

for May & June, 1864

Present or absent Present

Stoppage, $ 100 for

Due Gov't, $ 100 for

Valuation of horse, $ 100

Valuation of horse equipments, $ 100

Remarks:

† This organization subsequently became K, 11 Reg't U. S. Colored Heavy Artillery.

Book mark:

R Howard

(358) Copyist.

F 11 H. Art'y. U.S.C.T.

Moses Fry

Pvt., Co. K, 11 Reg't U. S. Col'd H. Art'y.

Appears on

Company Muster Roll

for July & Aug., 1864.

Present or absent Present.

Stoppage, $ 100 for

Due Gov't, $ 100 for

Valuation of horse, $ 100

Valuation of horse equipments, $ 100

Remarks: Free on 19 Apr. 61. $16 per Month. Mustered from enlistment to April 30/64.

Book mark:

(358) Copyist.

F | 11 H. Art'y. | U.S.C.T.

Moses Fry

Pvt., Co. K, 11 Reg't U. S. Col'd H. Art'y.

Appears on

Company Muster Roll

for Sept & Oct, 1864.

Present or absent Present

Stoppage, $ 100 for

Due Gov't, $ 22/100 for Ordnance

Lost & Destroyed,

Valuation of horse, $ 100

Valuation of horse equipments, $ 100

Remarks: Drew Clothing

Camp & Garrison

Equipage $ 1.49

Book mark:

Copyist.

F | 11 H. Art'y. | U.S.C.T.

Moses Fry

Pvt., Co. K, 11 Reg't U. S. Col'd H. Art'y.

Appears on

Company Muster Roll

for Nov & Dec, 1864.

Present or absent Present

Stoppage, $ 100 for

Due Gov't, $ 22/100 for Ordnance

Valuation of horse, $ 100

Valuation of horse equipments, $ 100

Remarks: 1 Pair Pr Spurs

C.T.G.C. 8/42

Book mark:

(358) Copyist.

I | 11 H. Arty. | U.S.C.T.

Moses Fry

Pvt., Co. K, 11 Reg't U. S. Col'd H. Arty.

Appears on

Descriptive List of Deserters

dated Jan. 6, 1863.

Deserted:

When Jan. 12, 1863.

Where Camp Parapet.

Arrested:

When ....., 186 .

Where .....

Remarks: .....

Book mark: .....

H. O. Gilbert,

(351) *Copyist.*

I 11th H. Arty. **U.S.C.T.**

Moses Fry

Pvt., Co. K, 11 Reg't U. S. Col'd H. Arty.

Appears on

Descriptive List of Deserters

dated Jan. 31, 1863.

Deserted :

When Jan 12, 1863.

Where Camp Parapet.

Arrested :

When ....., 186 .

Where .....

Remarks : .....

Book mark : .....

W. O Gilbert

(851) Copyist.

F | 11 H. Art'y. | U.S.C.T.

Pvt, Co. K, 11 Reg't U. S. Col'd H. Art'y.

Appears on

Company Muster Roll

for Jan't & Feb, 1865.

Present or absent

Stoppage, $ 100 for

Due Gov't, $ 23 66/100 for Ordnance.

Valuation of horse, $ 100

Valuation of horse equipments, $ 100

Remarks: Deserted from Camp Parapet, La. Jan 12/65. Due U S for C & G. E. & 8/100 22.

Book mark:

(358) *Copyist.*

H | 11 H. Art'y. | U.S.C.T.

Moses Fry

Pvt., Co. A, 11 Reg't U. S. Col'd H. Art'y.

Appears on **Co. Muster-out Roll,** dated New Orleans, La., Oct. 2, 186 9.

Muster-out to date ....., 186 .

Last paid to Aug. 31, 1864.

Clothing account:

Last settled....., 186 ; drawn since $.....100

Due soldier $.....100; due U. S. $2.....18/100

Am't for cloth'g in kind or money adv'd $.....100

Due U. S. for arms, equipments, &c., $.....100

Bounty paid $None.....100; due $None.....100

Remarks: Joined at Orig. Regt. Deserted June 12, '63 Camp Parapet, La.

Book mark: .....

Sprague

Copyist.

Pvt. Moses

P, Co. , 11 Reg't Mass Inf

1 **Enclosures.**

Bed Cards	Final Statements
Burial Records	Furloughs or L. of A.
Certs. of Dis. for Discharge	Med. Certificates
C. M. Charges	Med. Des. Lists
Descriptive Lists	Orders
Discharge Certificates	Pris. of War Record
Enlistment Papers 1	Resignations

Other papers relating to—

Admission to Hosp'l	Furlough or L. of A.
Casualty Sheet	Med. Examination
Confinement	Misc. Information
Contracts	Pay or Clothing
Death or Effects	Personal Reports
Desertion	Rank
Discharge from Hosp'l	Transfer to Hosp'l
Discharge from Service	Transfer to V. R. C.
Duty	Transportation

DECLARATION OF RECRUIT.

Moses Fry desiring to VOLUNTEER as a Soldier in the *ARMY OF THE UNITED STATES*, for the term of three years do declare that I am 24 years and months of age; that I have never been discharged from the United States service on account of disability or by sentence of a court martial, or by order, before the expiration of a term of enlistment; and I know of no impediment to my serving honestly and faithfully as a soldier for three years

Given at Brandon

The 5th day of Dec 18 63

Witness S S Chase

his
Moses + Fry
mark

No. C

Moses Fry

Volunteered at Dec

Dec 5 1863

By Maj P D Engell

14 Regiment of Vermont Infantry

U. S. Army

enlistment; last served in Company ( ) ( )

Reg't of

Discharged 18

RECEIVED-AGO
JUL 11
1871

CONSENT IN CASE OF MINOR.

DO CERTIFY that I am the of ; that the said is years of age; and I do hereby freely give my CONSENT to his volunteering as a SOLDIER in the ARMY OF THE UNITED STATES for the period of

Given at

The day of

Witness:

VOLUNTEER ENLISTMENT.

State of KD

Town of Rondout

I, Moses Fry born in Danville

in the State of Kentucky aged 24 years, and by occupation a Laborer

DO HEREBY ACKNOWLEDGE to have volunteered this 5th day of Dec 1863 to serve as a SOLDIER in the ARMY OF THE UNITED STATES OF AMERICA, for the period of Three Years, unless sooner discharged by proper authority: Do also agree to accept such bounty, pay, rations and clothing, as are, or may be, established, by law for volunteers. And I, Moses Fry do solemnly swear, that I will bear true faith and allegiance to the *United States of America*, and that I will serve them honestly and faithfully against all their enemies or opposers whomsoever; and that I will observe and obey the orders of the President of the United States, and the orders of the officers appointed over me, according to the Rules and Articles of War.

Sworn and Subscribed to, at Rondout this 5th day of Dec 1863 before me John Lockyer Public Notary

his
Moses X Fry
mark

I CERTIFY ON HONOR, That I have carefully examined the above-named Volunteer, agreeable to the General Regulations of the Army, and that, in my opinion, he is free from all bodily defects and mental infirmity, which would, in any way, disqualify him from performing the duties of a soldier.

Johnson Jr. Surg 20th N.Y.

EXAMINING SURGEON.

I CERTIFY, ON HONOR, That I have minutely inspected the Volunteer, Moses Fry previously to his enlistment, and that he was entirely sober when enlisted; that to the best of my judgment and belief, he is of lawful age; and that, in accepting him as duly qualified to perform the duties of an able-bodied soldier, I have strictly observed the Regulations which govern the recruiting service. This soldier has African *complexion*, is 5 *feet*, No 3/4 *inches high*, Black *eyes* Black *hair*

a Major 14th *Regiment of* Md Vol *Volunteers*,

RECRUITING OFFICER.

[illegible] U.S. Cavalry.

Captain.	Captain.

CARD NUMBERS.

1	6181116	26	
2	6182285	27	
3	6182431	28	
4	6182576	29	
5	6182716	30	
6	6182851	31	
7	6182997	32	
8	6183127	33	
9	6183238	34	
10	6183342	35	
11	6183449	36	
12	6183556	37	
13	6183662	38	
14	9436954	39	
15	9437054	40	
16	9437026	41	
17	27600870	42	
18	27601195	43	
19		44	
20		45	
21		46	
22		47	
23		48	
24		49	
25		50	

Book Mark:

See also

F. | 11 H. Art. | U. S. C. T.

Thos. W. Fry.

Capt., Co. ....., 11 Reg't U. S. Col'd H. Art.

Appears on

Regimental Descriptive Book

(List of Commissioned Officers)

of the regiment named above.

Rank Captain.

Date of appointment Aug. 28-, 1863.

Remarks: Det. ordered to Aransas Pass. S. O. No. 16, Hd. qrs. 13 A. C. Apl. 10-1864. Left. Apl-17-

Born in England, Resident of Providence R. I. Originally entered the service as 1st. Lt. 3rd R. I. H. A. Aug-20-1861. Mustered out June-15-1863. Mustered in Oct. 28-1863.

F. A. Knight

(384) Copyist

F. | 11th Art. | U. S. C. T.

Thomas W. Fry.

Cap., Co. ....., 11 Reg't U. S. Col'd Art.

Appears on

Regimental Descriptive Book

(List of Commissioned Officers)

of the regiment named above.

Rank Captain.

Date of appointment Aug. 28, 1863.

Remarks: Mustered Oct. 28-
1863. Born in England -
Permanent resident of
Prov. R. I. Age when
appointed 32. Originally entered the Service
as 1st Lt. 3d. R. I.
H. A. Aug-20-1861. Resigned June-15-1863.

F. A. Knight

(384) Copyist

F. | 11 N. Art | **U.S.C.T.**

Thomas A. Fay

Capt., Co. ....., "11" Reg't U. S. Col'd H. Art.

Appears on

Regimental Descriptive Book

(List of Commissioned Officers)

of the regiment named above.

Rank Captain

Date of appointment Aug. 28, 1863.

Remarks: Original Entry
1st Lt. Lt. 3. R. I. H.
Arty. Aug. 27, 1861.
Resigned 1863; Born
R. I. Resident R. I.
Age, 33.

BOOK MARK.— See 104-71-1865.

F. A. Mayer

F | 11 H. Art'y. | U.S.C.T.

Thomas W. Fry

Capt., Co. A, 14 Reg't R. I. Col'd H. Art'y.*

Appears on

Company Muster Roll

for Aug. 28, to Dec. 31, 1863. (Sign Roll)

Present or absent Not Stated

Stoppage, $.....100 for .....

.....

Due Gov't, $.....100 for .....

.....

Valuation of horse, $.....100

Valuation of horse equipments, $.....100

Remarks: .....

.....

.....

.....

.....

.....

.....

.....

*This organization subsequently became Co. A, 11 Reg't U. S. Colored Heavy Artillery.

Book mark: .....

.....

Brevitt

F | 11 H. Art'y. | U.S.C.T.

Thomas W. Fry

Capt, Co. A, 14 Reg't R. I. Col'd H. Art'y.*

Appears on

Company Muster Roll

for Jan & Feb, 1864.

Present or absent Present

Stoppage, $ 100 for

Due Gov't, $ 100 for

Valuation of horse, $ 100

Valuation of horse equipments, $ 100

Remarks:

*This organization subsequently became Co. A, 11 Reg't U. S. Colored Heavy Artillery.

Book mark:

Prewitt

(358) Copyist.

F | 11 N.A. | U.S.C.T.

Thomas H Fry

Capt, Co. ----, 11 Reg't U. S. Col'd (14th R.I. Cav'y & H.) YHA

Age ---- years.

Appears on a

Detachment Muster-in Roll

of the organization named above. Roll dated

Providence R.I., Mch 31, 1864.

Muster-in to date ----------, 186 .

#Appointed:
~~Joined for duty and enrolled~~:

When Oct 28, 186 3.

Where ----------

Period 3 years.

Valuation of horse, $ 100

Valuation of horse equipments, $ 100

Remarks: Did not present himself for re-muster

#Corrected by OJG Dec 29 1903

Book mark: ----------

C M Jackson

(337) *Copyist.*

I | 11 H. Art'y. | U.S.C.T.

Thomas W. Fry

Capt, Co. A, 14 Reg't R. I. Col'd H. Art'y.*

Appears on

Company Muster Roll

for March & Apl, 1864.

Present or absent Present

Stoppage, $ 100 for

Due Gov't, $ 100 for

Valuation of horse, $ 100

Valuation of horse equipments, $ 100

Remarks:

*This organization subsequently became Co. A, 11 Reg't U. S. Colored Heavy Artillery.

Book mark:

Prewitt

(358) Copyist.

F | 11 H. Art'y. | U.S.C.T.

Wm. H. Jay

Capt, Co. A, 8 Reg't U. S. Col'd H. Art'y.*

Appears on

Company Muster Roll

for Mch & June, 1864.

Present or absent Absent

Stoppage, $ ..... 100 for .....

Due Gov't, $ ..... 100 for .....

Valuation of horse, $ 100

Valuation of horse equipments, $ 100

Remarks: On command of the Chief Quartermaster Department.

* This organization subsequently became Co. A, 11 Reg't U. S. Colored Heavy Artillery.

Book mark: .....

Pruett

11 Heavy Arty. U.S. Col'd.

F | Chicago Mercantile Batt'y. | **111.**

Thomas W. Fry

Capt., Chicago Mercantile Batt'y, Illinois L. Art'y.

Appears on

Battery Muster Roll

for May & June, 1864.

Present or absent Present

Stoppage, $.....100 for.....

.....

Due Gov't, $.....100 for.....

.....

Valuation of horse, $.....100

Valuation of horse equipments, $.....100

Remarks: Temporarily detached
S.O. 43 Col. W.B. Barstow
Comdg. Dist. of Carrollton,
8th U.S. Heavy Arty. Col'd.

.....

.....

.....

.....

.....

.....

Book mark: .....

.....

Randall

Copyist.

A | **11 H. Art'y.** | **U.S.C.T.**

Thomas H. Fry

Capt. Co. A, 11 Reg't U. S. Col'd H. Art'y.

Appears on

Company Muster Roll

for July & Aug., 1864.

Present or absent Present

Stoppage, $ 100 for

Due Gov't, $ 100 for

Valuation of horse, $ 100

Valuation of horse equipments, $ 100

Remarks: 2 mo. pay due for May & June for responsibility of Arms &c.

Book mark:

(358)

Copyist.

11 N. Arty USA

I

Thomas W. Fay

Capt., Co. ....., ... Reg't .....

Appears on

Battery Muster Roll

of Chicago Mercantile Battery, Illinois L. Art'y,

for July & Aug, 1864.

Present or absent .....

Stoppage, $.....100 for .....

.....

Due Gov't, $.....100 for .....

.....

Valuation of horse, $.....100

Valuation of horse equipments, $.....100

Remarks: Reld from duty with this Co. by S.O. 50, Col N. B. Baltram,

.....

.....

.....

.....

.....

.....

.....

.....

Book mark: .....

.....

(358) Copyist.

D | 11 H. Art'y. | U.S.C.T.

Thomas K. Frey

Capt., Co. A, 11 Reg't U. S. Col'd H. Art'y.

Appears on

Company Muster Roll

for Sept. & Oct., 1864.

Present or absent Present

Stoppage, $.....100 for .....

.....

Due Gov't, $.....100 for .....

.....

Valuation of horse, $.....100

Valuation of horse equipments, $.....100

Remarks:.....

.....

.....

.....

.....

.....

.....

Book mark:.....

.....

E. A. Hicks

(358) Copyist.

D | 11 H. Art'y. | U.S.C.T.

Thomas H. Fry

Capt., Co. A, 11 Reg't U. S. Col'd H. Art'y.

Appears on

Company Muster Roll

for Nov. & Dec., 1864.

Present or absent Present

Stoppage, $ 100 for

Due Gov't, $ 100 for

Valuation of horse, $ 100

Valuation of horse equipments, $ 100

Remarks:

Book mark:

(358) Copyist.

A | 11 H. Art'y. | U.S.C.T.

Thomas H. Doe

Capt, Co. A, 11 Reg't U. S. Col'd H. Art'y.

Appears on

Company Muster Roll

for Jan. & Feb., 1865.

Present or absent Present

Stoppage, $ 100 for

Due Gov't, $ 100 for

Valuation of horse, $ 100

Valuation of horse equipments, $ 100

Remarks:

Book mark:

(358)

Copyist.

D 1 | 11 H. Art'y. | U.S.C.T.

Thomas H. Day

D. H., Co. A, 11 Reg't U. S. Col'd H. Art'y.

Appears on

Company Muster Roll

for Mar. & Apl., 1865.

Present or absent Present

Stoppage, $ 100 for

Due Gov't, $ 100 for

Valuation of horse, $ 100

Valuation of horse equipments, $ 100

Remarks:

Book mark:

T. A. Day

(358) Copyist.

T. | 11 H. Art'y. | U.S.C.T.

Thomas W. Fry,

Capt., Co. A, 11 Reg't U. S. Col'd H. Art'y.

Appears on

Company Muster Roll

for May and June, 1865.

Present or absent Present.

Stoppage, $ 100 for

Due Gov't, $ 100 for

Valuation of horse, $ 100

Valuation of horse equipments, $ 100

Remarks:

Book mark:

(358) P. A. Seaman

Copyist.

F. | 11 H. Art'y. | U.S.C.T.

Thos. W. Fry,

Capt., Co. A, 11 Reg't U. S. Col'd H. Art'y.

Appears on

Company Muster Roll

for July and August, 1865.

Present or absent Present.

Stoppage, $ 100 for

Due Gov't, $ 100 for

Valuation of horse, $ 100

Valuation of horse equipments, $ 100

Remarks:

Book mark:

R. Drummer

(358) Copyist.

F. | 11 H. Art'y. | U.S.C.T.

Thomas K. Fry,

Capt., Co. A, 11 Reg't U. S. Col'd H. Art'y.

Appears on **Co. Muster-out Roll,** dated

New Orleans, La., Oct. 2, 1865.

Muster-out to date Oct. 2, 1865.

Last paid to Febr. 28, 1865.

Clothing account:

Last settled ....., 186 ; drawn since $ 100

Due soldier $ ..... 100 ; due U. S. $ 100

Am't for cloth'g in kind or money adv'd $ 100

Due U. S. for arms, equipments, &c., $ 100

Bounty paid $ ..... 100 ; due $ 100

Remarks: Stopped for Commy. Stores $16.

Entitled to 3 Mo. Pay proper as provided in Genl. Order No. 45 Current Series War Dept.

Book mark: .....

R1 Summer.

(361) *Copyist.*

Pvt Thomas H.

Capt, Co. , 11 Reg't U.S.C.H.A.

7 **Enclosures.**

Bed Cards	Final Statements
Burial Records	Furloughs or L. of A.
Certs. of Dis. for Discharge	Med. Certificates
C. M. Charges	Med. Des. Lists
Descriptive Lists	Orders 4
Discharge Certificates	Pris. of War Record
Enlistment Papers	Resignations

Other papers relating to—

Admission to Hosp'l	Furlough or L. of A. 1
Casualty Sheet	Med. Examination
Confinement	Misc. Information 2
Contracts	Pay or Clothing
Death or Effects	Personal Reports
Desertion	Rank
Discharge from Hosp'l	Transfer to Hosp'l
Discharge from Service	Transfer to V. R. C.
Duty	Transportation

Thos. W. Hay.

Special Orders No 2.
Appointing Capt. Eng. asst. In-
spector General.
J. C. Cobb.
Col Comdg. Brigade
March. 15, 1864.

Head Quarters Provisional Brigade

Galveston Island Texas March 8th 1864

Special Orders

No 2

1. Captain Thomas Dr Ivy

1st/Battalion 14th U.S. Inf'y Actg is appointed Actg

Asst Inspector General of this Brigade, and

will enter upon his duties immediately—

By order of Colonel S. C. Cobb

Henry L. Chickley

1st Lieut & Actg Asst

Major S. F. Comstock

Comdg 1st Battn 14th U.S.I.

101. Hd. Qrs. 2nd Div. 1st Corps
July 5. 1864.

Special Orders
No 50
Extract

Pickets Capt Hoy
Co. Fifty from this
Command & Officer
of the Day Cautio
Battery. and orders
him to report to
his Comdg Officer

Headquarters, District of Carrollton,

Carrollton, La., July 5 1864.

Special Order,
NO. 50

[EXTRACT.]

* * * * *

II — 1st Lieut William Hiner. Jr., of the 17th Ohio Battery, having been assigned to the command of the Chicago Mercantile Battery, by S.O. No 172. Dept. of the Gulf. Captain Thomas W. Fry, 8th U.S.H.A., every in command is hereby relieved, and will report at once to his Regiment

BY COMMAND OF COL. N. B. BARTRAM.

John W. Evarts
1st Lieut & A. A. Adjutant-General.

C.O. 8th U.S. Hvy Artly Col'd
To ~~Capt Thos W Fry~~
8th U.S. Col'd Hvy Artly

Hd Qrs ~~Post Lampasas~~
S. W. F. C. A.
Dec 6/64

Special Order
No 33

Maj Thomas Jr
Ordered to Report to
Pst Bvt 8th Mo Vols a

H.Q. 2ds. Post Thibodaux La
Aug of Sub. Co. (H) July 6. 1864

Special Orders
No 33.

Captain Thomas N. Fry. 2d U.S.C.A.
Adj (H) having reported to this regimental
H.Q. 2ds. pursuant to S.O. No. 50. H.Q. 2ds
District of Lafourche, Thibodaux La July 5, 1864.
is hereby ordered to report to Lieut. Joseph
H. Comstock Jr. Com-dg (F) Batt. 2d U.S.C.A.
(by) at Fort Jackson La who will return
to duty (Capt Fry) in his Co. (A). of the Battalion.

By Command of
Lt Col Nelson Cross
Comm-dg Regt.
Supt & Adjutant

Com dg Officer
1st Batt 2d U.S.C.A. (Hy)

Hd. Qrs. Fort Jackson La.
Sept. 26. 1864

Approved and Respectfully
Forwarded.
J. H. Hanscott
Major Comdg.

Give them days
C.T.O.

6 September 1864 142

Fort Jackson La
September 25-1864

1st Lt Thomas H.
Capt. 11th U.S.C.A. (36 I)

Requests a leave of
Absence for 3 days with
Permission to apply for
An extension of 4 days

C.S. Granted for 4 days
S.O. 211 - 68 Sept. 26/64

Returned September 26/64

Fort Jackson La
Sept 25th 1864

Lieut-

I have the honor to apply for a leave of absence for three days. with permission to apply for an extension of four days from Hd Qrs Defences N.O.

I have the honor to be Lieut Very Respectfully Your Obt Servt Thos. H. Doy Capt 11th N.Y.S.V.A. Hy

Lieut Joseph Brown
Act Adjt
Fort Jackson
La.

Will be forwarded
Per Charles Hotel

T Oct 64 101

New Orleans La
October 22. /64

Genl Geo A.
Judge Advocate
Genl

States that Capt
Fox is a member
of a Court Martial
now assembled, by
Orders under his
hand and seal

Capt. J. W. Fox
11 U.S.C.H.A.

Received Oct. 22. /64

DEPARTMENT OF THE GULF,

United States Military Telegraph Office,

Oct 22d 1864

By Telegraph from New Orleans " "

To Maj J J Comstock

Comdg Forts

Capt Fry is a member of a general Court martial appointed by Maj Genl E R S Canby & after waiting three days for his appearance does hereby order him to come immediately

Geo A Peirce
Judge Advocate
DC Dept

104 . Nodale or 1865
Station . E. S
(Lt Jackson Supposed)

Thy Thomas N.
Capt. 11th U.S. Cavalry

Gives his military history.

Recd Hdqrs 2nd Prov Brigade March 23 65

Military History of Capt Thos W Jay
11th U. S. C. A. H.

Born in England Feb 24th 1831.
Permanent Resident of the State of Rhode Island.
Entered the Military Service of the U. S. as 1st Lieut in 3d R. I. Hd. A. Aug 20th 1861.
Was at the taking Port Royal. the Engagement on the Savanah River and the Destruction of the Salt-works at Bluffton S. C.
In May 1862 was Sent to Key West Fla. in charge of Prisoners. In June 1862 was ordered to the Command of Co L 3d R. I. H. A, was relieved in Aug 1862, and ordered to Fort Pulaski Ga. during the 3 mos absence of Capt. I commanded Co G 3d R. I. H. A. and had charge of the Artillery at that Post. on the return of Capt Gould. was ordered to the Command of the line of Entrenchments on Port Royal Island S. C. Resigned June 15th 1863. July 31st 1863 received my appointment as Capt 1st Colored Co R. I. H. A. In Oct 1863 passed the examining board of which Maj Gen Silas Casey was President. Received my appointment as Capt and was Mustered back to the date of my Co Muster Aug 28th 1863.
Left R I with 1st Batt 14th R. I. H. A. Dec 19th 1863. in Command of Co A. proceeded to New Orleans

La from there to Matagorda Island Texas.
from there to Mustang Island Texas. from
there to Camp Parapet La. In June 1864 had
Command of the Chicago Mercantile Battery. in
July 1864 was ordered to Fort Jackson La.

Respectfully
Geo W Fay
Capt 11th U.S.C.A. Hy

To
Lieut J Brown
Adjt 1st Batt 11th U.S.C.A. Hy.

Special Orders No 14.

Relieving Capt. O'Neal as Asst. Inspector Gen.

Col. J. C. Cobb.
Comdg Brigade

April 11. 1864.

Thos. M. Fry.

Head Quarters 1st Brigade, 1st Div.
Matagorda Island Texas
April 11th 1846

Special Orders
No. 14

Capt Cobb Commissary will upon his own request (at his own request) be relieved from duty as Depy Asst Commissary General at this Command. and will immediately report for duty with his regiment. (14th R.S.I.Mg obly)

By order of Col John C. Cobb
Henry P. Hunckley
1st Lt & Actg Asst Adjt Genl

1st D.S. Comd.D.
Capt. 1st Regt. 14th R.I.Mg obly.

11 U.S.Col'd H.Art'y.

Private

CARD NUMBERS.

1 6181259	26
	27
	28
	29
	30
	31
	32
	33
	34
	35
	36
12	37
13	38
14	39
15	40
16	41
17	42
18	43
19	44
20	45
21	46
22	47
23	48
24	49
25	50

Book Mark:

See also

F | 11 H. Art'y. | U.S.C.T.

Peter Fuller

Appears with rank of Pvt. on

Muster and Descriptive Roll of a Detachment of U. S. Vols. forwarded

for the 11 Reg't (14 R.I. Col'd Inf'y) Roll dated

Belfast Me, Aug 15, 186 4.

Where born Jamaica W.I.

Age 18 y'rs; occupation Waiter

When enlisted Aug 13, 186 4.

Where enlisted Belfast Me

For what period enlisted 3 years.

Eyes dark; hair Blk

Complexion Blk; height 5 ft. 3 1/2 in.

When mustered in Aug 13, 186 4.

Where mustered in Belfast Me

Bounty paid $ 100; due $ 100

Where credited Calais Washn. Co. 5th Dist. Maine

Company to which assigned

Remarks:

Name not taken upon rolls of Reg't
× Inserted by Comparer.

Book mark:

Clerk

112 A.P.C. N.C.

Fuller, Peter

———, ———, 14 Reg't R.I.H.C.

2 Enclosures.

Bed Cards	Final Statements
Burial Records	Furloughs or L. of A
Certs. of Dis. for Discharge	Med. Certificates
C. M. Charges	Med. Des. Lists
Descriptive Lists	Orders
Discharge Certificates	Pris. of War Record
Enlistment Papers 2	Resignations

Other papers relating to—

Admission to Hosp'l	Furlough or L. of A
Casualty Sheet	Med. Examination
Confinement	Misc. Information
Contracts	Pay or Clothing
Death or Effects	Personal Reports
Desertion	Rank
Discharge from Hosp'l	Transfer to Hosp'l
Discharge from Service	Transfer to V. R. C.
Duty	Transportation

DECLARATION OF RECRUIT.

I, Peter Fuller desiring to VOLUNTEER as a soldier in the ARMY OF THE UNITED STATES, for the term of THREE YEARS, DO DECLARE, That I am Eighteen years and ____ months of age: that I have never been discharged from the United States service on account of disability or by sentence of a court martial, or by order before the expiration of a term of enlistment: and I know of no impediment to my serving honestly and faithfully as a soldier for three years.

GIVEN at Bryan Mo, the 13th day of August 1864

Witness: J. Stueler

his
Peter X Fuller
mark

No. 14

Peter Fuller

Volunteered at Bryan Mo

August 13th 1864.

By J. McCleery

14th Mo Cav, Regiment of Mo Vols

Discharged

Regiment of

186

NOTE 1.—This blank will be used for both enlistments and re-enlistments—enlistments made out in triplicate in all cases—one to accompany the recruiting return of the superintendent (not the recruiting officer) to the Adjutant General of the Army, one to accompany the accounts of the officer who pays bounty, and one for the Adjutant General of the State. The Company in which the soldier last served should be given on the back.

NOTE 2.—An enlistment holds to service. A muster-in must, in all cases, precede payment of pay, bounty, pension, &c. A muster-in must, in all cases, precede payment of pay, bounty, pension, &c. A muster-in roll must, in all cases, be filed in the Adjutant General's Office as evidence of muster-in. The mustering officer, commissary, or assistant commissary of musters, as the case may be, will countersign all the enlistments as having mustered the soldier into the service of the United States before either of them is given to the disbursing officer.

CONSENT IN CASE OF MINOR.

I, ____ Do Certify, That I am the ____ of ____: that the said ____ is ____ years of age; and I do hereby freely give my CONSENT to his volunteering as a SOLDIER in the ARMY OF THE UNITED STATES for the period of THREE YEARS.

GIVEN at ____ the ____ day of ____ 186

Witness:

Quota of Calais

VOLUNTEER ENLISTMENT.

STATE OF Maine TOWN OF Calais

I, Peter Fuller born in Penobscot

in the State of Georgia aged Eighteen years,

and by occupation a Weaver Do HEREBY ACKOWLEDGE to have

volunteered this 13th day of August 1864

to serve as ***Soldier*** in the **Army of the United States of America**, for the period of *THREE YEARS*, unless sooner discharged by proper authority: Do also agree to accept such bounty, pay, rations and clothing, as are or may be established by law for volunteers. And I, Peter Fuller do solemnly swear that I will bear true faith and allegiance to the **United States of America**, and that I will serve them honestly and faithfully against all their enemies or opposers whomsoever; and that I will observe and obey the orders of the President of the United States, and the orders of the officers appointed over me, according to the Rules and Articles of War

Sworn and subscribed to, at Belfast

this 13th day of August 1864 } his Peter X Fuller mark

BEFORE A. D. Bean

Capt & Pro Marshal 5th Dis Maine

I CERTIFY, ON HONOR, that I have carefully examined the above named Volunteer, agreeably to the General Regulations of the Army, and that in my opinion he is free from all bodily defects and mental infirmity, which would, in any way, disqualify him from performing the duties of a soldier.

Thos Bloomer
Surgeon 14th Regt

EXAMINING SURGEON.

I CERTIFY, ON HONOR, That I have minutely inspected the Volunteer, ...
previously to his enlistment, and that he was entirely sober when enlisted; that, to the best of my judgment and belief, he is of lawful age; and that, in accepting him as duly qualified to perform the duties of an able-bodied soldier, I have strictly observed the Regulations which govern the recruiting service. This soldier has Dark EYES, Black HAIR, Black COMPLEXION, is 5 FEET 3½ INCHES high.

14th Regiment of R. I. Artillery Volunteers,

A. D. Bean RECRUITING OFFICER.

Capt & Pro Marshal 5th Dis Maine

NOTE.—The Recruiting Officer will here enter the soldier's residence, and state whether *married or single.

This soldier is a resident of Calais and is * Single

Mustered into the service of the United States, in Company ..... Regiment of R. I. Artillery Volunteers, on the 14th day of August 1864 at Belfast

A. D. Bean
Capt & Pro Marshal 5th Dis Maine
Mustering Officer

DECLARATION OF RECRUIT.

I, Peter Fuller desiring to VOLUNTEER as a soldier in the ARMY OF THE UNITED STATES, for the term of THREE YEARS, DO DECLARE, That I am Eighteen years and months of age: that I have never been discharged from the United States service on account of disability or by sentence of a court martial, or by order before the expiration of a term of enlistment: and I know of no impediment to my serving honestly and faithfully as a soldier for three years.

GIVEN at Belfast Me the 13th day of August 1864

Witness: J. Whuler

Peter Fuller

No. 831.

Peter Fuller

Volunteered at Belfast Me

Aug 13th 1864

By C. A. D. Beeson

14th R. I. Regiment of Hy Art

14th R. I. Artillery

enlistment; last served in Co. (

Regiment of

Discharged 186

A 24 of

2

F/64 2.

CONSENT IN CASE OF MINOR.

I, Do CERTIFY, That I am the of ; that the said is years of age; and I do hereby freely give my CONSENT to his volunteering as a SOLDIER in the ARMY OF THE UNITED STATES for the period of THREE YEARS.

GIVEN at the day of 186

Witness:

NOTE 1.—This blank will be used for both enlistments and re-enlistments—enlistment of veterans, &c., &c., in the volunteer service. They will be made out in triplicate in all cases—one to accompany the recruiting return of the superintendent (not the recruiting officer) to the Adjutant General of the Army, one to accompany the accounts of the officer who pays bounty, and one for the Adjutant General of the State. The Regiment and Company in which the soldier last served should be given on the back.

NOTE 2.—An enlistment holds to service. A muster-in must, in all cases, precede payment of pay, bounty, pension, &c. A muster-in roll must, in all cases, be filed in the Adjutant General's Office as evidence of muster-in. The mustering officer, commissary, or assistant commissary of musters, as the case may be, will countersign all the enlistments as having mustered the soldier into the service of the United States before either of them is given to the disbursing officer.

Quota of Calais

VOLUNTEER ENLISTMENT.

STATE OF Maine TOWN OF Calais

I, Peter Fuller born in Savannah
in the State of Georgia aged Eighteen years,
and by occupation a Master Do HEREBY ACKOWLEDGE to have
volunteered this 13th day of August 1864
to serve as ***Soldier*** in the **Army of the United States of America**, for the
period of *THREE YEARS*, unless sooner discharged by proper authority: Do also
agree to accept such bounty, pay, rations and clothing, as are or may be established by law for volunteers. And I, Peter Fuller do
solemnly swear that I will bear true faith and allegiance to the **United States of America**, and that I will serve them honestly and faithfully against all their
enemies or opposers whomsoever; and that I will observe and obey the orders of
the President of the United States, and the orders of the officers appointed over
me, according to the Rules and Articles of War

and is * Single

This soldier is a resident of Calais

Sworn and subscribed to, at Belfast
this 13th day of August 1864. his Peter X Fuller mark
BEFORE A. D. Bean
Capt & Pro Marshal 5th Dis Maine

I CERTIFY, ON HONOR, that I have carefully examined the above named Volunteer, agreeably to the General Regulations of the Army, and that in my opinion he is free from all bodily defects and mental infirmity, which would, in any way, disqualify him from performing the duties of a soldier.

Examining Surgeon.

I CERTIFY, ON HONOR, That I have minutely inspected the Volunteer, _____ previously to his enlistment, and that he was entirely sober when enlisted; that, to the best of my judgment and belief, he is of lawful age; and that, in accepting him as duly qualified to perform the duties of an able-bodied soldier, I have strictly observed the Regulations which govern the recruiting service. This soldier has Dark EYES, Black HAIR, Black COMPLEXION, is 5 FEET 3½ INCHES high.

14th Regiment of R. I. Artillery Volunteers,

RECRUITING OFFICER.

A. D. Bean
Capt & Pro Marshal 5th Dis Maine

NOTE.—The Recruiting Officer will here enter the soldier's residence, and state whether *married or single.

Mustered into the service of the United States, in Company 14th Regiment of R. I. Artillery, Volunteers, on the 13th day of August 1864 at Belfast

A. D. Bean
Capt & Pro Marshal 5th Dis Maine
Mustering Officer

[illegible] Smrak

CARD NUMBERS.

1 19 4287	26
2 619 4445	27
3 619 4588	28
4 619 4734	29
5 619 4876	30
6 619 5015	31
7 619 5231	32
8 619 6026	33
9 912 5327	34
10	35
11	36
12	37
13	38
14	39
15	40
16	41
17	42
18	43
19	44
20	45
21	46
22	47
23	48
24	49
25	50

Book Mark:

See also

F | 11 H. Art'y. | U.S.C.T.

Newton Furber

....., Co. H, 11 Reg't U. S. Col'd H. Art'y.

Appears on

Company Descriptive Book

of the organization named above.

DESCRIPTION.

Age 19 years; height 5 feet 10 inches.

Complexion African

Eyes Dk ; hair Blk

Where born Lexington Ky

Occupation Farmer

ENLISTMENT.

When Nov 4, 1863.

Where Prov, R I.

By whom H Engler; term 3 y'rs.

Remarks: Died in hospl at Plaquemine, La, Sept 1, 164. Disease "Congestive Chills"

W F Roe

(383g) Copyist.

F | 11 H. Art'y. | U.S.C.T.

Newton Farber

Pvt., Co. H, 14 Reg't R. I. Col'd H. Art'y.*

Age 19 years.

Appears on

Company Muster-in Roll

of the organization named above. Roll dated Providence R I, Nov 23, 1863.

Muster-in to date Nov. 23, 1863.

Joined for duty and enrolled:

When Nov. 4, 1863.

Where Providence R. I.

Period ..... years.

Valuation of horse, $ 100

Valuation of horse equipments, $ 100

Remarks Residence Providence R. I.

* This organization subsequently became Co. H, 11 Reg't U. S. Colored Heavy Artillery.

Book mark:

Perry

(356) Copyist.

F | 11 H. Art'y. | U.S.C.T.

Newton Furber

Pvt., Co. H, 14 Reg't R. I. Col'd H. Art'y.*

Appears on

Company Muster Roll

for 23 Nov. to 31 Dec, 1863.

Present or absent Present

Stoppage, $ 100 for

Due Gov't, $ 100 for

Valuation of horse, $ 100

Valuation of horse equipments, $ 100

Remarks:

*This organization subsequently became Co. H, 11 Reg't U. S. Colored Heavy Artillery.

Book mark:

Perry

(355) Copyist.

F | 11 H. Art'y. | U.S.C.T.

Newton Furber

Pvt., Co. H, 14 Reg't R. I. Col'd H. Art'y.*

Appears on

Company Muster Roll

for Jan & Feb, 1864.

Present or absent Present

Stoppage, $.....100 for .....

.....

.....

Due Gov't, $.....100 for .....

.....

.....

Valuation of horse, $.....100

Valuation of horse equipments, $.....100

Remarks:.....

.....

.....

.....

.....

.....

.....

*This organization subsequently became Co. H, 11 Reg't U. S. Colored Heavy Artillery.

Book mark:.....

Perry

(353) *Copyist.*

F | 11 H. Art'y. | U.S.C.T.

Newton Furber

Priv., Co. H, 14 Reg't R. I. Col'd H. Art'y.*

Appears on

Company Muster Roll

for Mch. & Apl, 1864.

Present or absent Present

Stoppage, $ 100 for

Due Gov't, $ 100 for

Valuation of horse, $ 100

Valuation of horse equipments, $ 100

Remarks:

*This organization subsequently became Co. H, 11 U. S. Col'd H. Art'y

Book mark:

Perry

(358) Copyist.

F | 11 H. Art'y. | U.S.C.T.

Newton Furber

Pow, Co. K, 8 Reg't U. S. Col'd H. Art'y.*

Appears on

Company Muster Roll

for May & June, 1864.

Present or absent Present

Stoppage, $ 100 for

Due Gov't, $ 100 for

Valuation of horse, $ 100

Valuation of horse equipments, $ 100

Remarks: Stop for one Upper tompion Cap pouch & pick, canteen

† This organization subsequently became Co. K, 11 Reg't U. S. Colored Heavy Artillery.

Book mark:

Parry

 Copyist.

F. | 11 H. Art'y. | U.S.C.T.

Newton Fenner

Private, Co. H, 11 Reg't U. S. Col'd H. Art'y.

Appears on

Company Muster Roll

for July & Aug, 1864.

Present or absent Present

Stoppage, $ 100 for

Due Gov't, $ 100 for

Valuation of horse, $ 100

Valuation of horse equipments, $ 100

Remarks: Stop for wiper

20. Tompion 02 Cap pouch

1 pick 45. Cartridge 41.

1 G. Coat Straps 10.

Haversack 48.

Pvt. Apr. 19, 1861.

Book mark:

W. A. Tyler

(358) *Copyist.*

F | 11 H. Art'y. | U.S.C.T.

Newton Furbee

Private, ~~Co.~~ H, 11 Reg't U. S. Col'd H. Art'y.

Appears on

Company Muster Roll

for Dated Oct. 31, 1864.

Present or absent.....

Stoppage, $.....100 for .....

.....

Due Gov't, $.....100 for .....

.....

.....

Valuation of horse, $.....100

Valuation of horse equipments, $.....100

Remarks: Died at Plaquemine La. Sept. 1, 1864.
"Burial Statement given"

.....

.....

.....

.....

.....

.....

.....

Book mark: .....

W A Sykes

(358) *Copyist.*

F | 11 H. Art'y. | U.S.C.T.

Newton Turner

Pvt., Co. H; 11 Reg't U. S. Col'd H. Art'y.

Appears on **Co. Muster-out Roll,** dated New Orleans La. Oct. 2, 1865.

Muster-out to date ....., 186 .

Last paid to ....., 186 .

Clothing account:

Last settled....., 186 ; drawn since $.....100

Due soldier $.....100; due U. S. $.....100

Am't for cloth'g in kind or money adv'd $.....100

Due U. S. for arms, equipments, &c., $ 100

Bounty paid $.....100; due $.....100

Remarks: Joined at orig'l orgn
Died at Plaquemine La.
Sept 1st/64 of Congestive
Chills. Final State-
ments forwarded.

Book mark :

Rhees

(361) *Copyist.*

Turber, Newton

P, Co. H, 11 Regt U.S.C.H.A.

3 Enclosures.

Bed Cards	Descriptive Lists
Burial Records	Final Statements 1
Certs. of Dis. for Discharge	Furloughs
C. M. Charges	Med. Des. Lists
Med. Certificates	Orders

Other papers relating to—

Admission to Hosp'l	Furlough
Casualty Sheet (Officer's)	Med. Examination
Confinement	Misc. Information
Contracts	Pay or Clothing
Death or Effects	Personal Reports
Desertions	Rank
Discharge from Hosp'l	Transfer to Hosp'l
Discharge from Service	Transfer to V. R. C.
Duty	Transportation

94
3d Ill. 2d — 1864 —

FINAL STATEMENT

OF

Newton Fuller

11th Reg't of U. S. C. A. (Hy.)

VOLUNTEERS.

NOTE 1.—*Two* of these certificates (or duplicates) are to be given to each Volunteer Soldier or drafted man who may be discharged previously to the discharge of his company, that he may at once receive from the Paymaster the pay, &c., due him, and the captain or other COMMISSIONED officer commanding the company will certify to the act of the delivery of the duplicate certificates; on these certificates the Soldier is "entitled to" his *discharge*, and should also present his discharge to the Paymaster to have the payment endorsed on it. The discharge is to be given back to the Soldier by the Paymaster; the latter only retaining as his voucher the duplicate certificates.

NOTE 2.—If the Soldier is entitled to pay for the use of his horse, the Company Commander will certify to that fact on the back of both these final statements, and also to the time he has pay due for having been so mounted on his own horse.

NOTE 3.—When a Soldier is furnished with final statements, his descriptive list, if he has one, should be taken up by the officer who gives the Soldier these statements, and endorsed with a statement to this effect by the officer. This endorsement should exhibit a full statement of the time for which the Soldier was allowed pay on his final statements, the clothing account, and all other charges against him or in his favor, so as to comprise a complete exhibit of his account. It will then be transmitted to the company commander of the Soldier, who will enter all the data necessary to a full understanding of the Soldier's account on the muster roll upon which the Soldier's discharge is reported. The descriptive list will then be destroyed. The object of this is, that the remaining portion of the Soldier's account may be settled upon the receipt of these muster rolls, and the Soldier receive any pay or allowances that may be due him at the time of his discharge, and which may not appear on his final statements from the fact that his descriptive list is incomplete. These accounts for back pay, &c., are settled by the 2d Auditor of the Treasury Department.

NOTE 4.—Charges for loss or injury to ordnance, horse equipments, and other miscellaneous charges, should appear under the heading of "Other Stoppages."

NOTE 5.—Bounty paid by State authorities, and not by the United States, will not be entered on this statement.

NOTE 6.—Amounts due the Sutler and Laundress must be entered on the muster roll on which the discharge, death, desertion, &c., is reported, as well as on the final statement, otherwise the amount cannot be collected from the United States.

NOTE 7.—This blank will be used for deceased volunteers and drafted men, as well as for others.

NOTE 8.—Where a Soldier dies in Hospital or on detached service, his descriptive list, if he has one, should be sent with his final statements, in duplicate, to the Adjutant General, Washington, D. C.

1864

Jan 6 1871

I certify, on honor, that Newton Furber a Private of Captain J. M. Addeman's Company (H) of the 11th Regiment of U.S.C. Arty (Hy) **VOLUNTEERS**, of the State of Rhode Island, born in Lexington, State of Kentucky, aged 20 years; 5 feet 10 inches high; African complexion, dark eyes, black hair, and by occupation a farmer, having joined the company on its original organization at Providence R.I, and enrolled in it at the muster into the service of the United States at Providence R.I., on the 23d day of November, 1863, (or was mustered in service as a recruit, by ....., at ....., on the ..... day of ....., 186 , or was drafted and mustered into the service of the United States from the ..... Enrollment District of the State of ....., at ....., on the ..... day of ....., 186 ,) to serve in the Regiment, for the term of three years: and having served **HONESTLY** and **FAITHFULLY** with his Company in the field to the present date, is now entitled to a **DISCHARGE** by reason of death. He died in hospital at Plaquemine La, Sept. 1, 1864. of Congestive Chills

The said Newton Furber has never been paid ~~was last paid by Paymaster~~ ——— to include the ——— day of ———, 186 , and has pay due him from that time to the present date; he is entitled to pay and subsistence for **TRAVELING** to place of enrollment, and whatever other allowances are authorized to volunteer soldiers, drafted men, or militia, so discharged. He has received from the United States **CLOTHING** amounting to fifty four $\frac{57}{100}$ dollars, since the 4th day of November, 1863, when his clothing account was last settled. He has received from the United States ..... $\frac{00}{100}$ dollars advanced **BOUNTY**.

There is to be stopped from him, on account of the State of ....., or other authorities, for **CLOTHING**, &c., received on entering service, ... $\frac{00}{100}$ dollars; and for other stoppages, viz: one cripen .20; tompion .02; Cap pouch and pick .45; Canteen .41 2 Y. Coat straps .10 Haversack .48 amounting to one $\frac{66}{100}$ dollars.

He has been furnished with TRANSPORTATION in kind from the place of his discharge to .....; and he has been SUBSISTED for TRAVELING to his place of enrollment, up to the ....., 186 .

He is indebted to Chase, Brown & Co, **SUTLER**, 21 $\frac{00}{100}$ dollars.

He is indebted to ....., **LAUNDRESS**, ... $\frac{00}{100}$ dollars.

Given in Duplicate, at Plaquemine, La, this 1st day of September, 1864.

J. M. Addeman
Capt 11th U.S.C.A.
Commanding Company.

[A. G. O. No. 95—First.]

✓

FINAL STATEMENT

OF

Newton Fuller

11th Reg't of U.S.C.A. (Ky)

11

VOLUNTEERS.

Asst Surg 1st Ky H

NOTE 1.—*Two* of these certificates (or duplicates) are to be given to each Volunteer Soldier or drafted man who may be discharged previously to the discharge of his company, that he may at once receive from the Paymaster the pay, &c., due him, and the captain or other COMMISSIONED officer commanding the company will certify to the act of the delivery of the duplicate certificates; on these certificates the Soldier is "entitled to" his *discharge*. and should also present his discharge to the Paymaster to have the payment endorsed on it. The discharge is to be given back to the Soldier by the Paymaster; the latter only retaining as his voucher the duplicate certificates.

NOTE 2.—If the Soldier is entitled to pay for the use of his horse, the Company Commander will certify to that fact on the back of both these final statements, and also to the time he has pay due for having been so mounted on his own horse.

NOTE 3.—When a Soldier is furnished with final statements, his descriptive list, if he has one, should be taken up by the officer who gives the Soldier these statements, and endorsed with a statement to this effect by the officer. This endorsement should exhibit a full statement of the time for which the Soldier was allowed pay on his final statements, the clothing account, and all other charges against him or in his favor, so as to comprise a complete exhibit of his account. It will then be transmitted to the company commander of the Soldier, who will enter all the data necessary to a full understanding of the Soldier's account on the muster roll upon which the Soldier's discharge is reported. The descriptive list will then be destroyed. The object of this is, that the remaining portion of the Soldier's account may be settled upon the receipt of these muster rolls, and the Soldier receive any pay or allowances that may be due him at the time of his discharge, and which may not appear on his final statements from the fact that his descriptive list is incomplete. These accounts for back pay, &c., are settled by the 2d Auditor of the Treasury Department.

NOTE 4.—Charges for loss or injury to ordnance, horse equipments, and other miscellaneous charges, should appear under the heading of "Other Stoppages."

NOTE 5.—Bounty paid by State authorities, and not by the United States, will not be entered on this statement.

NOTE 6.—Amounts due the Sutler and Laundress must be entered on the muster roll on which the discharge, death, desertion, &c., is reported, as well as on the final statement, otherwise the amount cannot be collected from the United States.

NOTE 7.—This blank will be used for deceased volunteers and drafted men, as well as for others.

NOTE 8.—Where a Soldier dies in Hospital or on detached service, his descriptive list, if he has one, should be sent with his final statements, in duplicate, to the Adjutant General, Washington, D. C.

ADJUTANT GENERAL'S OFFICE.
Sept 21 1864
Duplicate will hereby sent 2d Auditor.

RECEIVED
SEPT
20
1864
ADJUTANT GENERAL'S OFFICE

Lewis

I certify, on honor, that Newton Tuber a private of Captain J. M. Addeman's Company (H) of the 11th Regiment of U.S.C. Calry (Hy) VOLUNTEERS, of the State of Rhode Island, born in Lexington, State of Kentucky, aged 20 years; 5 feet 10 inches high; African complexion, dark eyes, Black hair, and by occupation a Farmer, having joined the company on its original organization at Providence R.I., and enrolled in it at the muster into the service of the United States at Providence R.I., on the 23rd day of November, 1863, (or was mustered in service as a recruit, by ....., at ....., on the ..... day of ....., 186 , or was drafted and mustered into the service of the United States from the ..... Enrollment District of the State of ....., at ....., on the ..... day of ....., 186 ,) to serve in the Regiment, for the term of three years: and having served HONESTLY and FAITHFULLY with his Company in the field to the present date, is now entitled to a DISCHARGE by reason of Death. He died in hospital at Plaquemine La. Sept 1st 1864, of Congestive Chill

The said Newton Tuber has never been paid ~~was last paid by Paymaster~~ ..... to include the ..... day of ....., 186-, and has pay due him from that time to the present date; he is entitled to pay and subsistence for TRAVELING to place of enrollment, and whatever other allowances are authorized to volunteer soldiers, drafted men, or militia, so discharged. He has received from the United States CLOTHING amounting to fifty four $\frac{57}{100}$ dollars, since the 4th day of November, 1863, when his clothing account was last settled. He has received from the United States ..... $\frac{}{100}$ dollars advanced BOUNTY.

There is to be stopped from him, on account of the State of ....., or other authorities, for CLOTHING, &c., received on entering service, ... $\frac{}{100}$ dollars; and for other stoppages, viz: one wiper, 20; tompion, 02; Cap pouch and pick, 45; Canteen 41; 2 S. Coat straps, 10; Haversack, 48 amounting to one (1) $\frac{66}{100}$ dollars.

He has been furnished with TRANSPORTATION in kind from the place of his discharge to .....; and he has been SUBSISTED for TRAVELING to his place of enrollment, up to the ....., 186 .

He is indebted to Chase, Brown & Co, SUTLER, 21 $\frac{}{100}$ dollars.

He is indebted to ....., LAUNDRESS, ... $\frac{}{100}$ dollars.

Given in Duplicate, at Plaquemine, La, this 1st day of September, 1864.

J. M. Addeman

Capt 11th USCA. Hy

Commanding Company.

[A, G. O. No. 95—First.]

ARTICLES OF WAR.

ART. 95. When any non-commissioned officer or soldier shall die, or be killed in the service of the United States, the then commanding officer of the troop or company shall, in the presence of two other commissioned officers, take an account of what effects he died possessed of, above his arms and accoutrements, and transmit the same to the office of the Department of War, which said effects are to be accounted for, and paid to the representatives of such deceased non-commissioned officer or soldier. And in case any of the officers, so authorized to take care of the effects of deceased officers and soldiers, should, before they have accounted to their representatives for the same, have occasion to leave the regiment or post, by preferment or otherwise, they shall, before they be permitted to quit the same, deposit in the hands of the commanding officer, or of the assistant military agent, all the effects of such deceased non-commissioned officers and soldiers, in order that the same may be secured for, and paid to, their respective representatives.

ARMY REGULATIONS—EDITION OF 1861.

DECEASED SOLDIERS.

Par. 152. Inventories of the effects of deceased non-commissioned officers and soldiers, required by the 95th Article of War, will be forwarded to the Adjutant General, by the commander of the company to which the deceased belonged, and a duplicate of the same to the colonel of the regiment. Final statements of pay, clothing, &c., will be sent with the inventories. When a soldier dies at a post or station absent from his company, it will be the duty of his immediate commander to furnish the required inventory, and, at the same time, to forward to the commanding officer of the company to which the soldier belonged, a report of his death, specifying the date, place, and cause; to what time he was last paid, and the money or other effects in his possession at the time of his decease; which report will be noted on the next muster roll of the company to which the man belonged. Each inventory will be endorsed, "Inventory of the effects of ——— ———, late of company (—) ——— regiment of ———, who died at ———, the——— day of ———, 186–." If a legal representative receive the effects, it will be stated in the report. If the soldier leave no effects, the fact will be reported.

Par. 153. Should the effects of a deceased non-commissioned officer or soldier not be administered upon within a short period after his decease, they shall be disposed of by a Council of Administration, under the authority of the commanding officer of the post, and the proceeds deposited with the Paymaster, to the credit of the United States, until they shall be claimed by the legal representatives of the deceased.

Par. 154. In all such cases of sales by the Council of Administration, a statement in detail, or account of the proceeds, duly certified by the Council and commanding officer, accompanied by the Paymaster's receipt for the proceeds, will be forwarded by the commanding officer to the Adjutant General. The statement will be endorsed, "Report of the proceeds of the effects of ——— ———, late of company (—) ——— regiment of ———, who died at ———, the —— day of ———, 186–."

NOTE 1.—The effects in all cases, when called for, should be turned over to the legal representative, without further authority from the Adjutant General. When the effects are turned over to the relatives of the deceased before these inventories are sent to the Adjutant General, their receipts therefor should be attached to the inventories. In all other cases, one copy will be sent with a letter of transmittal direct to the Adjutant General, and a duplicate retained by the officer.

NOTE 2.—Particular care should be taken to take receipts in duplicate from the Paymaster for any funds turned over to him; one copy should be sent direct to the Adjutant General and one retained by the officer.

INVENTORY OF THE EFFECTS

OF

Newton Fuller

Late of Company H

11th Reg't of U. S. C. Art'y (Hy)

Volunteers, who died at Plaquemine La

on the 1st day of September 1864.

JUL 6 1871 ADJUTANT GENERAL'S

Inventory of the effects of Newton Fenber late a Private of Captain J. M. Addeman Company H of the 11th Regiment of U.S. Col'd Artly (Hy) Volunteers; who was enrolled as a Private at Providence in the State of Rhode Island on the 4th day of November 1863, and mustered into the service of the United States as a Private on the 23d day of November 1863, at Providence R. I. in Company H, 11th Regiment of U.S. Col'd Artly (Hy) Volunteers, to serve three years or during the war; he was born in Lexington in the State of Kentucky; he was 20 years of age, 5 feet 10 inches high, African complexion, dark eyes, black hair, and by occupation, when enrolled, a Farmer; he died in Hospital at Plaquemine La. on the 1st day of September 1864, by reason of Congestive Chills.

INVENTORY.

Articles.	No.	Articles.	No.	Articles.	No.
Hats		Pairs trowsers		Knapsacks	
Caps		Pairs flannel drawers			
Forage caps		Pairs cotton drawers			
Great coats		Flannel shirts			
Uniform coats		Cotton shirts			
Uniform jackets		Pairs boots			
Flannel sack coats		Pairs shoes			
Blouses		Pairs socks			
Stable frocks		Blankets			
Fatigue overalls		Haversacks			

Money.		
	Specie	$ —
	Notes	$ —

I certify, on honor, that the above inventory comprises all the effects of Private Newton Fenber, deceased, and that the effects are in the hands of ~ at ~ to be disposed of by a Council of Administration.

J. M. Addeman
Capt. 11th U.S.C.A. (Hy)
Commanding the Company.

(DUPLICATES.)

Station: Plaquemine, La.

Date: Sept. 1. 1864

[A. G. O. No. 104.]

The deceased left no effects

...,11 U.S.Col'd H.Art'y.

Private	Sergeant

CARD NUMBERS.

1	6185520	26	
2	6185659	27	
3	6185811	28	
4	6185954	29	
5	6186092	30	
6	6186226	31	
7	6186354	32	
8	6186475	33	
9	6186589	34	
10	6186695	35	
11	6186808	36	
12	6186919	37	
13	6187029	38	
14	9124409	39	
15		40	
16		41	
17		42	
18		43	
19		44	
20		45	
21		46	
22		47	
23		48	
24		49	
25		50	

Book Mark:

See also

P2909462 ccRVB

S3052011 0 0 min

J. D. Mayo

7 | 11 H. Art'y. | U.S.C.T.

William Furgerson

_____, Co. C, 11 Reg't U. S. Col'd H. Art'y.

Appears on

Company Descriptive Book

of the organization named above.

DESCRIPTION.

Age 24 years; height 5 feet 11 inches.

Complexion Dk

Eyes Blk; hair Blk

Where born Washington D C.

Occupation Waiter

ENLISTMENT.

When Aug 27, 1863.

Where Prov. R I

By whom Maj Sanford, term 3 y'rs.

Remarks: Apt Sergt Dec 13/63

Jurnts

(383y) Copyist.

F | 11 H. Art'y. | U.S.C.T.

William Furguson

Priv., Co. C, 14 Reg't R. I. Col'd H. Art'y.*

Age 22 years.

Appears on

Company Muster-in Roll

of the organization named above. Roll dated Providence R. I. Sept. 14, 1863.

Muster-in to date Sept 14, 1863.

Joined for duty and enrolled:

When Aug 24th, 1863.

Where Providence R. I.

Period 3 years.

Valuation of horse, $ 100

Valuation of horse equipments, $ 100

Remarks:

* This organization subsequently became Co. C, 11 Reg't U. S. Colored Heavy Artillery.

Book mark:

Valentine

(356)

Copyist.

F | 11 H. Art'y. | U.S.C.T.

William Furgeson

Serg't, Co. C, 14 Reg't R. I. Col'd H. Art'y.*

Appears on

Company Muster Roll

for Sept. 14 to Dec 31, 1863.

Present or absent Presented

Stoppage, $ 100 for

Due Gov't, $ 100 for

Valuation of horse, $ 100

Valuation of horse equipments, $ 100

Remarks:

Appointed Dec 13th 1863.

*This organization subsequently became Co. C, 11 Reg't U. S. Colored Heavy Artillery.

Book mark:

Valentine

(358) Copyist.

F | 11 H. Art'y. | U.S.C.T.

William Furgeson

Sergt., Co. C, 14 Reg't R. I. Col'd H. Art'y.*

Appears on

Company Muster Roll

for Jan & Feb, 1864.

Present or absent Present

Stoppage, $ 100 for

Due Gov't, $ 100 for

Valuation of horse, $ 100

Valuation of horse equipments, $ 100

Remarks:

Appointed Dec 13th 1863,

*This organization subsequently became Co. C, 11 Reg't U. S. Colored Heavy Artillery.

Book mark:

Valentine

F | 11 H. Art'y. | U.S.C.T.

William Burgeson

Sergt, Co. C, 8 Reg't U. S. Col'd H. Art'y.*

Appears on

Company Muster Roll

for March & Apr, 1864.

Present or absent Present,

Stoppage, $ 100 for

Due Gov't, $ 100 for

Valuation of horse, $ 100

Valuation of horse equipments, $ 100

Remarks:

Stop for Camp & G. Equipage 56¢

*This organization subsequently became Co. C, 11 Reg't U. S. Colored Heavy Artillery.

Book mark:

Valentine

Copyist.

H | 11 H. Art'y. | U.S.C.T.

William Surgerson

Sgt, Co. C, 8 Reg't U. S. Col'd H. Art'y.*

Appears on

Company Muster Roll

for May & June, 1864.

Present or absent Present,

Stoppage, $ 100 for

Due Gov't, $ 100 for

Valuation of horse, $ 100

Valuation of horse equipments, $ 100

Remarks:

Stop for C. & G. Equipage 56¢

*This organization subsequently became Co. C, 11 Reg't U. S. Colored Heavy Artillery.

Book mark:

Valentine

Copyist.

F | **11** H. Art'y. | **U.S.C.T.**

William Ferguson

Asst, Co. C, 11 Reg't U. S. Col'd H. Art'y.

Appears on

Company Muster Roll

for July & Aug, 1864

Present or absent Present

Stoppage, $ 100 for

Due Gov't, $ 100 for

Valuation of horse, $ 100

Valuation of horse equipments, $ 100

Remarks: Transferred
to C. & S. E. 5'64
Appointed Dec 13, 63
Trans out 1961

Book mark:

(358) Copyist.

F | 11 H. Art'y. | U.S.C.T.

William E Ferguson

A, Co. C, 11 Reg't U. S. Col'd H. Art'y.

Appears on

Company Muster Roll

for Sept & Oct, 1864

Present or absent Present

Stoppage, $ 100 for

Due Gov't, $ 100 for

Valuation of horse, $ 100

Valuation of horse equipments, $ 100

Remarks:

Book mark:

Quinn

(358) Copyist.

4 | 11 H. Art'y. | U.S.C.T.

William Ferguson

Sgt., Co. C, 11 Reg't U. S. Col'd H. Art'y.

Appears on

Company Muster Roll

for Nov & Dec, 1864

Present or absent Present

Stoppage, $ 88/100 for ordnance

Due Gov't, $ 100 for

Valuation of horse, $ 100

Valuation of horse equipments, $ 100

Remarks:

Book mark:

(358) Copyist.

4 | 11 H. Art'y. | U.S.C.T.

William Ferguson

Lt, Co. C, 11 Reg't U. S. Col'd H. Art'y.

Appears on

Company Muster Roll

for Jan & Feb, 1865.

Present or absent Present

Stoppage, $ 88/100 for Ordnance

Due Gov't, $ 100 for

Valuation of horse, $ 100

Valuation of horse equipments, $ 100

Remarks:

Book mark:

(358) Copyist.

4

11 H. Art'y. | U.S.C.T.

William Ingmire

Sgt., Co. C, 11 Reg't U. S. Col'd H. Art'y.

Appears on

Company Muster Roll

for March & Apl, 1865.

Present or absent Present

Stoppage, $ 88/100 for Ordnance

Due Gov't, $ 00/100 for

Valuation of horse, $ 00/100

Valuation of horse equipments, $ 00/100

Remarks:

Book mark:

(358) Copyist.

F | 11 H. Art'y. | U.S.C.T.

William Ferguson

Sgt, Co. C, 11 Reg't U. S. Col'd H. Art'y.

Appears on

Company Muster Roll

for May and June, 1865.

Present or absent Present

Stoppage, $ 100 for

Due Gov't, $ 100 for

Valuation of horse, $ 100

Valuation of horse equipments, $ 100

Remarks:

Book mark:

Bliss

(358) *Copyist.*

F | 11 H. Art'y. | U.S.C.T.

William Furgeson

Sgt, Co. C, 11 Reg't U. S. Col'd H. Art'y.

Appears on

Company Muster Roll

for July and Aug., 1865.

Present or absent Present

Stoppage, $ 1 65/100 for Clo. & C. E

Due Gov't, $ 100 for

Valuation of horse, $ 100

Valuation of horse equipments, $ 100

Remarks:

Book mark:

Bliss

(358) Copyist.

F | 11 H. Art'y. | U.S.C.T.

William Ferguson

Sgt., Co. C, 11 Reg't U.S. Col'd H. Art'y.

Appears on **Co. Muster-out Roll,** dated New Orleans La., Oct. 2d, 186 5.

Muster-out to date Oct. 2, 186 5.

Last paid to Feby. 28, 186 5.

Clothing account:

Last settled ....., 186 ; drawn since $ 100

Due soldier $ ..... 100; due U. S. $ 39 57/100

Am't for cloth'g in kind or money adv'd $ 100

Due U. S. for arms, equipments, &c., $ 100

Bounty paid $ ..... 100; due $ 100 00/100

Remarks: Enlisted Org. Orgn. Pvt. Co. C Dec. 31/63 Stop for one Musket acct. retained Stop for Cav'y Equipage Articles unknown 1.65

Book mark: .....

Diss'd

(361) *Copyist.*

Ferguson William

....., Co. ....., ... Reg't U.S.C.H.A.

..... Enclosures.

Bed Cards	Final Statements .....
Burial Records	Furloughs or L. of A. .....
Certs. of Dis. for Discharge	Med. Certificates .....
C. M. Charges	Med. Des. Lists .....
Descriptive Lists	Orders .....
Discharge Certificates	Pris. of War Record .....
Enlistment Papers	Resignations .....

Other papers relating to—

Admission to Hosp'l	Furlough or L. of A. .....
Casualty Sheet	Med. Examination .....
Confinement	Misc. Information .....
Contracts	Pay or Clothing .....
Death or Effects	Personal Reports .....
Desertion	Rank .....
Discharge from Hosp'l	Transfer to Hosp'l .....
Discharge from Service	Transfer to V. R. C. .....
Duty	Transportation .....
.....	.....

MICROFILM PUBLICATION M 1832

COMPILED MILITARY SERVICE RECORDS
OF VOLUNTEER UNION SOLDIERS WHO SERVED WITH
THE UNITED STATES COLORED TROOPS (USCT)
11TH REGIMENT OF HEAVY ARTILLERY

PERSONAL PAPERS' TARGET SHEET

PLEASE NOTE THE CHECKED INFORMATION ABOUT THE PERSONAL PAPERS IN THIS FILE:

☐ NO PERSONAL PAPERS WERE FOUND IN THIS FILE WHEN THE RECORDS WERE ARRANGED FOR MICROFILMING.

☑ 3 PERSONAL PAPER(S) FOUND IN THIS FILE WHEN THE RECORDS WERE ARRANGED FOR MICROFILMING.

DECLARATION OF RECRUIT.

I, William Ferguson desiring to VOLUNTEER as a Soldier in the *ARMY OF THE UNITED STATES*, for the term of three years, do declare that I am 22 years and 11 months of age; that I have never been discharged from the United States service on account of disability or by sentence of a court martial, or by order, before the expiration of a term of enlistment; and I know of no impediment to my serving honestly and faithfully as a soldier for the 14th Col. Battalion R. I.

Given at Providence
The 27th day of August 1861.

Witness:
Hen. B. Wampus

his
William × Ferguson
mark

No. 13

William Ferguson

Volunteered at Providence R.I.
August 27 1861
By Col. Dutton
14th Col. Battalion R.I.M.

Recruit of Capt. Dutton, R.I.
14th Col. Battalion R.I.M.

enlistment; last served in Company ( ) Regiment of

Reg't of

Discharged 18

RECEIVED-TAX
Jul 11 1871

CONSENT IN CASE OF MINOR.

I, of Do CERTIFY that I am the ; that the said is years of age; and I do hereby freely give my CONSENT to his volunteering as a SOLDIER in the ARMY OF THE UNITED STATES for the period of

Given at
The day of

Witness:

VOLUNTEER ENLISTMENT.

State of Rhode Island Town of Providence

I, William Ferguson born in Charleston
in the State of South Carolina aged 21 years, and by occupation
a Person DO HEREBY ACKNOWLEDGE to have volunteered this 27th
day of August 1863, to serve as a SOLDIER in the ARMY OF THE UNITED STATES
of AMERICA, for the period of three years, unless sooner discharged by proper authority:
Do also agree to accept such bounty, pay, rations and clothing, as are, or may be, established by law for
volunteers. And I, William Ferguson do solemnly swear, that I will bear
true faith and allegiance to the *United States of America*, and that I will serve them honestly and faith-
fully against all their enemies or opposers whomsoever; and that I will observe and obey the orders of
the President of the United States, and the orders of the officers appointed over me, according to the
Rules and Articles of War.

Sworn and subscribed to, at Providence
this 27 day of Aug 1863.
BEFORE Gov. Parkman
Justice of the Peace

his
William X Ferguson
mark

I CERTIFY, ON HONOR, That I have carefully examined the above-named Volunteer, agreeably to the General Regulations of the Army, and that, in my opinion, he is free from all bodily defects and mental infirmity, which would, in any way, disqualify him from performing the duties of a soldier.

Thomas Gardner M.D.
EXAMINING SURGEON.

I CERTIFY, ON HONOR, That I have minutely inspected the Volunteer, William Ferguson, previously to his enlistment, and that he was entirely sober when enlisted; that, to the best of my judgment and belief, he is of lawful age; and that, in accepting him as duly qualified to perform the duties of an able-bodied soldier, I have strictly observed the Regulations which govern the recruiting service. This soldier has dark hazel eyes, black hair, African complexion, is 5 feet, 10 inches high.

Lieut-Col Battalion H. A.,
R. I. Volunteers,

Wm. H. Hehr
RECRUITING OFFICER.

Transportation
to New Orleans on
on steam Tug Chief,

Samuel Lapsley
Capt. & A. Q. M.

Head Quarters
Fla Jackson & St Philip.
Oct. 21. 1874

Special Orders }
No 78 }.

I. A. Wm. Sugerson. Co C.
11th U. S. Co, as Guard, will
proceed to N. O. on Tug
Rede Chief with mail
& despatches: will pro-
cure what mail
there is in N. Orleans
- return.

Oct. 20th
No boat to day

Jno Jones
Sergt

"Head Quarters"
Fort Jackson Mr St. Philip
October 21st 1864

Special Orders.
No. 78.

1. Sergt. Wm. Ferguson will proceed this day on Steamer "Red Chief" to New Orleans, carrying the mail, having dispatches in the Post Office in New Orleans & procure what mail matter there may be for this Command, he will immediately rejoin his Station.

By command of Maj. J. J. Comstock Jr
Lucius Crocker
Lieut & A.A.A.G.

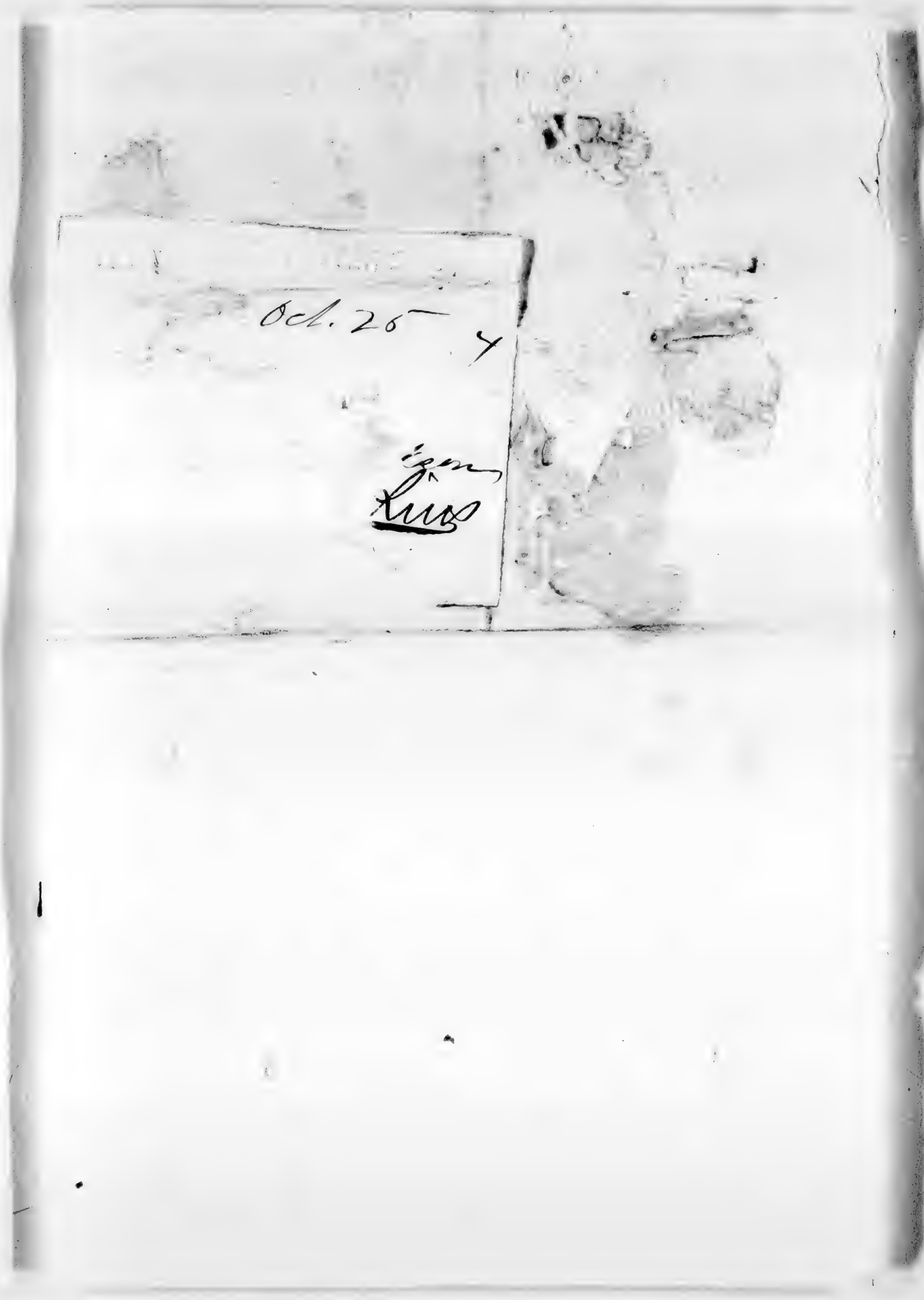
Oct. 26

Headquarters, Defences of New Orleans,

New Orleans, Oct. 25th 1864.

Lieuts Geo Parker
Pro Lt. H. Augustus
U.S.N. (H) until
Ingenuation to Ft.
Jackson can be
Furnished

By Command
Brig Genl Sherman
Chief

[illegible], 11 U.S.Col'd H.Ar[illegible]

Private	Private

CARD NUMBERS.

1	26
2	27
3 See Farman, James	28
4	29
5	30
6	31
7	32
8	33
9	34
10	35
11	36
12	37
13	38
14	39
15	40
16	41
17	42
18	43
19	44
20	45
21	46
22	47
23	48
24	49
25	50

Book Mark:

See also

50

Co C, 11 U.S.Col'd H.Art'y.

Private

CARD NUMBERS.

1 618555 58	26
2 618570 7	27
3 618585 6	28
4 618597 7	29
5 618 6135	30
6 618 6345	31
7 618 7147	32
8 9124411	33
9	34
10	35
11	36
12	37
13	38
14	39
15	40
16	41
17	42
18	43
19	44
20	45
21	46
22	47
23	48
24	49
25	50

Book Mark: P. V. 4. P. 151-68

See also

G | 11 H. Art'y. | U.S.C.T.

John Gaines

_____, Co. C, 11 Reg't U. S. Col'd H. Art'y.

Appears on

Company Descriptive Book

of the organization named above.

DESCRIPTION.

Age 20 years; height 5 feet 4 inches.

Complexion Dk

Eyes Dk; hair Dk

Where born Philadelphia Pa

Occupation Shoemaker

ENLISTMENT.

When Aug 26, 1863.

Where Davis R I

By whom Maj. Sanford, term 3 y'rs.

Remarks: Died Aug. 29. Fort Jackson La of congestive fever. Final statements & inventory of effects sent Aug 29. 64. Bal amt of clothing drawn from U.S. 65.48. from R I 36.95. for ordnance 3.56 for C Hq 2.4.64. No effects Inventory of effects sent

James

(3830) Copyist.

G | 11 H. Art'y. | U.S.C.T.

John Gaines

Ohio, Co. C, 14 Reg't R. I. Col'd H. Art'y.*

Age 20 years.

Appears on

Company Muster-in Roll

of the organization named above. Roll dated Providence R.I., Sept. 14, 1863.

Muster-in to date Sept 14, 1863.

Joined for duty and enrolled:

When August 28th, 1863.

Where Providence R.I.

Period 3 years.

Valuation of horse, $ 100

Valuation of horse equipments, $ 100

Remarks:

* This organization subsequently became Co. 6, 11 Reg't U. S. Colored Heavy Artillery.

Book mark:

Valentine

G | 11 H. Art'y. | U.S.C.T.

John Gaines

Pvr, Co. C, 14 Reg't R. I. Col'd H. Art'y.*

Appears on

Company Muster Roll

for Sept. 1st to Dec 31, 1863.

Present or absent Present.

Stoppage, $ ..... 100 for .....

Due Gov't, $ ..... 100 for .....

Valuation of horse, $ 100

Valuation of horse equipments, $ 100

Remarks: .....

*This organization subsequently became Co. C, 11 Reg't U. S. Colored Heavy Artillery.

Book mark: .....

Valentine

Copyist.

G | 11 H. Art'y. | U.S.C.T.

John Gaines

Priv., Co. C, 14 Reg't R. I. Col'd H. Art'y.*

Appears on

Company Muster Roll

for Jan & Feb., 1864.

Present or absent Present.

Stoppage, $ 100 for

Due Gov't, $ 100 for

Valuation of horse, $ 100

Valuation of horse equipments, $ 100

Remarks:

*This organization subsequently became Co. C, 11 Reg't U. S. Colored Heavy Artillery.

Book mark:

Valentine

(358) Copyist.

G | 11 H. Art'y. | U.S.C.T.

John Gaines

Priv., Co. C., 8 Reg't U. S. Col'd H. Art'y.*

Appears on

Company Muster Roll

for March & Apl, 1864.

Present or absent Present.

Stoppage, $ 100 for

Due Gov't, $ 100 for

Valuation of horse, $ 100

Valuation of horse equipments, $ 100

Remarks:

*This organization subsequently became Co. 6, 11 Reg't U. S. Colored Heavy Artillery.

Book mark:

Valentine

(358) Copyist.

G | 11 H. Art'y. | U.S.C.T.

John Gaines

Priv., Co. 6, 8 Reg't U. S. Col'd H. Art'y.*

Appears on

Company Muster Roll

for May & June, 1864.

Present or absent Present

Stoppage, $ 100 for

Due Gov't, $ 100 for

Valuation of horse, $ 100

Valuation of horse equipments, $ 100

Remarks:

† This organization subsequently became Co. 6, 11 Reg't U. S. Colored Heavy Artillery.

Book mark:

Valentine

(358) *Copyist.*

C | 11 H. Art'y. | U.S.C.T.

John Gaines

Corp., Co. C, 11 Reg't U. S. Col'd H. Art'y.

Appears on

Company Muster Roll

for July & Aug, 1864.

Present or absent

Stoppage, $ 100 for

Due Gov't, $ 100 for

Valuation of horse, $ 100

Valuation of horse equipments, $ 100

Remarks: Stoppage for ordnance $3.56 Stoppage for C.S.A. $4.64 Died at Fort Pocahontas Aug 26, 64 Final Statement Issued

Book mark:

(358)

Copyist.

G | 11 H. Art'y. | U.S.C.T.

John Gaines

Pvt., Co. G, 11 Reg't U. S. Col'd H. Art'y.

Appears on **Co. Muster-out Roll,** dated

New Orleans La, Oct. 2, 1865.

Muster-out to date ....., 186 .

Last paid to ....., 186 .

Clothing account:

Last settled....., 186 ; drawn since $.....100

Due soldier $.....100; due U. S. $.....100

Am't for cloth'g in kind or money adv'd $.....100

Due U. S. for arms, equipments, &c., $.....100

Bounty paid $.....100; due $.....100

Remarks: Joined Arty. Argn. Died at Fort Jackson Aug. 24/64 Inv. & Final Statt. Sent.

Book mark: OV 4 P 151, 68

Bliss

(361) *Copyist.*

Gaines, John

P, Co. C, 11 Regt. U.S.C.H.A.

2 Enclosures.

Bed Cards	Descriptive Lists
Burial Records	Final Statements 2
Certs. of Dis. for Discharge	Furloughs
C. M. Charges	Med. Des. Lists
Med. Certificates	Orders

Other papers relating to—

Admission to Hosp'l	Furlough
Casualty Sheet (Officer's)	Med. Examination
Confinement	Misc. Information
Contracts	Pay or Clothing
Death or Effects /	Personal Reports
Desertions	Rank
Discharge from Hosp'l	Transfer to Hosp'l
Discharge from Service	Transfer to V. R. C.
Duty	Transportation

NARA 703

46
3d 2 1864

FINAL STATEMENT

OF

John Gaines

8th Reg't of U.S. C. Hvy Artly

VOLUNTEERS.

late the 14th R.I. Heavy Art

NOTE 1.—*Two* of these certificates (or duplicates) are to be given to each Volunteer Soldier or drafted man who may be discharged previously to the discharge of his company, that he may at once receive from the Paymaster the pay, &c., due him, and the captain or other COMMISSIONED officer commanding the company will certify to the act of the delivery of the duplicate certificates; on these certificates the Soldier is "entitled to" his *discharge*, and should also present his discharge to the Paymaster to have the payment endorsed on it. The discharge is to be given back to the Soldier by the Paymaster; the latter only retaining as his voucher the duplicate certificates.

NOTE 2.—If the Soldier is entitled to pay for the use of his horse, the Company Commander will certify to that fact on the back of both these final statements, and also to the time he has pay due for having been so mounted on his own horse.

NOTE 3.—When a Soldier is furnished with final statements, his descriptive list, if he has one, should be taken up by the officer who gives the Soldier these statements, and endorsed with a statement to this effect by the officer. This endorsement should exhibit a full statement of the time for which the Soldier was allowed pay on his final statements, the clothing account, and all other charges against him or in his favor, so as to comprise a complete exhibit of his account. It will then be transmitted to the company commander of the Soldier, who will enter all the data necessary to a full understanding of the Soldier's account on the muster roll upon which the Soldier's discharge is reported. The descriptive list will then be destroyed. The object of this is, that the remaining portion of the Soldier's account may be settled upon the receipt of these muster rolls, and the Soldier receive any pay or allowances that may be due him at the time of his discharge, and which may not appear on his final statements from the fact that his descriptive list is incomplete. These accounts for back pay, &c., are settled by the 2d Auditor of the Treasury Department.

NOTE 4.—Charges for loss or injury to ordnance, horse equipments, and other miscellaneous charges, should appear under the heading of "Other Stoppages."

NOTE 5.—Bounty paid by State authorities, and not by the United States, will not be entered on this statement.

NOTE 6.—Amounts due the Sutler and Laundress must be entered on the muster roll on which the discharge, death, desertion, &c., is reported, as well as on the final statement, otherwise the amount cannot be collected from the United States.

NOTE 7.—This blank will be used for deceased volunteers and drafted men, as well as for others.

NOTE 8.—Where a Soldier dies in Hospital or on detached service, his descriptive list, if he has one, should be sent with his final statements, in duplicate, to the Second Auditor, Washington, D.C.

RECEIVED
JUL
9
1864

I certify, on honor, that John Gaines a private of Captain George Bacon's Company (B) of the 8th Regiment of R.I. Col Hvy A. VOLUNTEERS, of the State of Rhode Island, born in Philadelphia, State of Penn, aged 20 years; 5 feet 4 inches high; Dark complexion, Dark eyes, Dark hair, and by occupation a Shoemaker, having joined the company on its original organization at Providence R.I., and enrolled in it at the muster into the service of the United States at Providence R.I., on the 14th day of Sept., 1863, (or was mustered in service as a recruit, by Maj Sanford, at Prov R.I., on the 28th day of Aug, 1863, or was drafted and mustered into the service of the United States from the Enrollment District of the State of , at , on the day of , 186 ,) to serve in the Regiment, for the term of three years: and having served HONESTLY and FAITHFULLY with his Company in the Battalion to the present date, is now entitled to a DISCHARGE by reason of death.

The said John Gaines was ~~last~~ never paid by Paymaster to include the day of , 186 , and has pay due him from that time to the present date; he is entitled to pay and subsistence for TRAVELING to place of enrollment, and whatever other allowances are authorized to volunteer soldiers, drafted men, or militia, so discharged. He has received from the United States CLOTHING amounting to N.C. 48/100 dollars, since the 28 day of August, 1863, when his clothing account was last settled. He has received from the United States 00/100 dollars advanced BOUNTY.

There is to be stopped from him, on account of the State of Rhode Island or other authorities, for CLOTHING, &c., received on entering service, Shirt &c 98/100 dollars; and for other stoppages, viz: Advance $3.56 for Canteen & Cartridge Box $4.64

00/100 dollars.

He has been furnished with TRANSPORTATION in kind from the place of his discharge to ; and he has been SUBSISTED for TRAVELING to his place of enrollment, up to the , 186 .

He is indebted to , SUTLER, 00/100 dollars.

He is indebted to , LAUNDRESS, 00/100 dollars.

Given in Dupliate, at Fort Jackson La, this 24 day of August, 1864.

No Effects

George Bacon

Capt 8th R.I.Col Hvy A

Commanding Company.

[A. G. O. No. 95—First.]

FINAL STATEMENT

OF

John Gaines

Late Reg't of Ill. Col. V.H.

11th Dist (Ariz) 25th 1864.

VOLUNTEERS.

Late the 14th R.I. Heavy Art

NOTE 1.—*Two* of these certificates (or duplicates) are to be given to each Volunteer Soldier or drafted man who may be discharged previously to the discharge of his company, that he may at once receive from the Paymaster the pay, &c., due him, and the captain or other COMMISSIONED officer commanding the company will certify to the act of the delivery of the duplicate certificates; on these certificates the Soldier is "entitled to" his *discharge*, and should also present his discharge to the Paymaster to have the payment endorsed on it. The discharge is to be given back to the Soldier by the Paymaster; the latter only retaining as his voucher the duplicate certificates.

NOTE 2.—If the Soldier is entitled to pay for the use of his horse, the Company Commander will certify to that fact on the back of both these final statements, and also to the time he has pay due for having been so mounted on his own horse.

NOTE 3.—When a Soldier is furnished with final statements, his descriptive list, if he has one, should be taken up by the officer who gives the Soldier these statements, and endorsed with a statement to this effect by the officer. This endorsement should exhibit a full statement of the time for which the Soldier was allowed pay on his final statements, the clothing account, and all other charges against him or in his favor, so as to comprise a complete exhibit of his account. It will then be transmitted to the company commander of the Soldier, who will enter all the data necessary to a full understanding of the Soldier's account on the muster roll upon which the Soldier's discharge is reported. The descriptive list will then be destroyed. The object of this is, that the remaining portion of the Soldier's account may be settled upon the receipt of these muster rolls, and the Soldier receive any pay or allowances that may be due him at the time of his discharge, and which may not appear on his final statements from the fact that his descriptive list is incomplete. These accounts for back pay, &c., are settled by the 2d Auditor of the Treasury Department.

NOTE 4.—Charges for loss or injury to ordnance, horse equipments, and other miscellaneous charges, should appear under the heading of "Other Stoppages."

NOTE 5.—Bounty paid by State authorities, and not by the United States, will not be entered on this statement.

NOTE 6.—Amounts due the Sutler and Laundress must be entered on the muster roll on which the discharge, death, desertion, &c., is reported, as well as on the final statement, otherwise the amount cannot be collected from the United States.

NOTE 7.—This blank will be used for deceased volunteers and drafted men, as well as for others.

NOTE 8.—Where a Soldier dies in Hospital or on detached service, his descriptive list, if he has one, should be sent with his final statements, in duplicate, to the Second Auditor, Washington, D. C.

ADJUTANT GEN'S OFFICE. SEPT 6 1864

ADJUTANT GENERAL'S OFFICE.
Sept. 6" 1864
Inventory sent 2d Auditor.

FINAL STATEMENT

OF

John Gaines

8th Reg't of U.S. Col. T.H.

11th Lieut (Aug 24 1814.

VOLUNTEERS.

late the 14th R.I. Militia Col

NOTE 1.—*Two* of these certificates (or duplicates) are to be given to each Volunteer Soldier or drafted man who may be discharged previously to the discharge of his company, that he may at once receive from the Paymaster the pay, &c., due him, and the captain or other COMMISSIONED officer commanding the company will certify to the act of the delivery of the duplicate certificates; on these certificates the Soldier is "entitled to" his *discharge*, and should also present his discharge to the Paymaster to have the payment endorsed on it. The discharge is to be given back to the Soldier by the Paymaster; the latter only retaining as his voucher the duplicate certificates.

NOTE 2.—If the Soldier is entitled to pay for the use of his horse, the Company Commander will certify to that fact on the back of both these final statements, and also to the time he has pay due for having been so mounted on his own horse.

NOTE 3.—When a Soldier is furnished with final statements, his descriptive list, if he has one, should be taken up by the officer who gives the Soldier these statements, and endorsed with a statement to this effect by the officer. This endorsement should exhibit a full statement of the time for which the Soldier was allowed pay on his final statements, the clothing account, and all other charges against him or in his favor, so as to comprise a complete exhibit of his account. It will then be transmitted to the company commander of the Soldier, who will enter all the data necessary to a full understanding of the Soldier's account on the muster roll upon which the Soldier's discharge is reported. The descriptive list will then be destroyed. The object of this is, that the remaining portion of the Soldier's account may be settled upon the receipt of these muster rolls, and the Soldier receive any pay or allowances that may be due him at the time of his discharge, and which may not appear on his final statements from the fact that his descriptive list is incomplete. These accounts for back pay, &c., are settled by the 2d Auditor of the Treasury Department.

NOTE 4.—Charges for loss or injury to ordnance, horse equipments, and other miscellaneous charges, should appear under the heading of "Other Stoppages."

NOTE 5.—Bounty paid by State authorities, and not by the United States, will not be entered on this statement.

NOTE 6.—Amounts due the Sutler and Laundress must be entered on the muster roll on which the discharge, death, desertion, &c., is reported, as well as on the final statement, otherwise the amount cannot be collected from the United States.

NOTE 7.—This blank will be used for deceased volunteers and drafted men, as well as for others.

NOTE 8.—Where a Soldier dies in Hospital or on detached service, his descriptive list, if he has one, should be sent with his final statements, in duplicate, to the Second Auditor, Washington, D.C.

ADJUTANT GENERAL'S OFFICE.
Sept. 6th 1814
Duplicate with Inventory sent 2d Auditor.

ADJUTANT GENERAL'S OFFICE
SEPT 6
1814

I certify, on honor, that John Gaines a private of Captain Geo Buckley Company (C) of the 8th Regiment of 2nd Col Colt H. VOLUNTEERS, of the State of Rhode Island, born in Philadelphia, State of Penn, aged 20 years; 5 feet 6 inches high; Dark complexion, Dark eyes Dark hair, and by occupation a Shoemaker, having joined the company on its original organization at Providence R.I., and enrolled in it at the muster into the service of the United States at Providence RI, on the 14th day of Sept, 1863, (or was mustered in service as a recruit, by Maj Sherfield, at Pass R.I, on the 28th day of August, 1863, or was drafted and mustered into the service of the United States from the / Enrollment District of the State of ....., at ....., on the ..... day of ....., 186 ,) to serve in the Regiment, for the term of three years: and having served HONESTLY and FAITHFULLY with his Company in 1st Batt 8th Regt Col Colt H. the present date, is now entitled to a DISCHARGE by reason of Death (Died Aug 24th 1864 see Inventory)

The said John Gaines was ~~last~~ never paid by Paymaster ..... to include the ..... day of ....., 186 , and has pay due him from that time to the present date; he is entitled to pay and subsistence for TRAVELING to place of enrollment, and whatever other allowances are authorized to volunteer soldiers, drafted men, or militia, so discharged. He has received from the United States CLOTHING amounting to Sixty five $\frac{48}{100}$ dollars, since the 2d day of August, 1863, when his clothing account was last settled. He has received from the United States ..... $\frac{00}{100}$ dollars advanced BOUNTY.

There is to be stopped from him, on account of the State of Rhode Island, or other authorities, for CLOTHING, &c., received on entering service, Thirty six $\frac{98}{100}$ dollars; and for other stoppages, viz: Ordnance $3.50 for Camp & Garrison Equipage $4.64 ..... $\frac{00}{100}$ dollars.

He has been furnished with TRANSPORTATION in kind from the place of his discharge to .....; and he has been SUBSISTED for TRAVELING to his place of enrollment, up to the ....., 186 .

He is indebted to ....., SUTLER, ... $\frac{00}{100}$ dollars.

He is indebted to ....., LAUNDRESS, ... $\frac{00}{100}$ dollars.

Given in Duplicate, at Fort Jackson La, this 24 day of August, 1864.

No Effects

George Buckley

Capt 8th Regt Col Colt H.

Commanding Company.

[A. G. O. No. 95—First.]

ARTICLES OF WAR.

ART. 95. When any non-commissioned officer or soldier shall die, or be killed in the service of the United States, the then commanding officer of the troop or company shall, in the presence of two other commissioned officers, take an account of what effects he died possessed of, above his arms and accoutrements, and transmit the same to the office of the Department of War, which said effects are to be accounted for, and paid to the representatives of such deceased non-commissioned officer or soldier. And in case any of the officers, so authorized to take care of the effects of deceased officers and soldiers, should, before they have accounted to their representatives for the same, have occasion to leave the regiment or post, by preferment or otherwise, they shall, before they be permitted to quit the same, deposit in the hands of the commanding officer, or of the assistant military agent, all the effects of such deceased non-commissioned officers and soldiers, in order that the same may be secured for, and paid to, their respective representatives.

ARMY REGULATIONS—EDITION OF 1861.

DECEASED SOLDIERS.

Par. 152. Inventories of the effects of deceased non-commissioned officers and soldiers, required by the 95th Article of War, will be forwarded to the Adjutant General, by the commander of the company to which the deceased belonged, and a duplicate of the same to the colonel of the regiment. Final statements of pay, clothing, &c., will be sent with the inventories. When a soldier dies at a post or station absent from his company, it will be the duty of his immediate commander to furnish the required inventory, and, at the same time, to forward to the commanding officer of the company to which the soldier belonged, a report of his death, specifying the date, place, and cause; to what time he was last paid, and the money or other effects in his possession at the time of his decease; which report will be noted on the next muster roll of the company to which the man belonged. Each inventory will be endorsed, "Inventory of the effects of ——— ———, late of company (—) ——— regiment of ———, who died at ———, the ——— day of ———, 186–." If a legal representative receive the effects, it will be stated in the report. If the soldier leave no effects, the fact will be reported.

Par. 153. Should the effects of a deceased non-commissioned officer or soldier not be administered upon within a short period after his decease, they shall be disposed of by a Council of Administration, under the authority of the commanding officer of the post, and the proceeds deposited with the Paymaster, to the credit of the United States, until they shall be claimed by the legal representatives of the deceased.

Par. 154. In all such cases of sales by the Council of Administration, a statement in detail, or account of the proceeds, duly certified by the Council and commanding officer, accompanied by the Paymaster's receipt for the proceeds, will be forwarded by the commanding officer to the Adjutant General. The statement will be endorsed, "Report of the proceeds of the effects of ——— ———, late of company (—) ——— regiment of ———, who died at ———, the ——— day of ———, 186–."

NOTE 1.—The effects in all cases, when called for, should be turned over to the legal representative, without further authority from the Adjutant General. When the effects are turned over to the relatives of the deceased before these inventories are sent to the Adjutant General, their receipts therefor should be attached to the inventories. In all other cases, one copy will be sent with a letter of transmittal direct to the Adjutant General, and a duplicate retained by the officer.

NOTE 2.—Particular care should be taken to take receipts in duplicate from the Paymaster for any funds turned over to him; one copy should be sent direct to the Adjutant General and one retained by the officer.

INVENTORY OF THE EFFECTS

OF

John Gaines

Late of Company C

8 Reg't of U.S.C.H.A.

Volunteers, who died at Fort Jackson La

on the 24 *day of* August 1864.

Late the 15th R.I.H.A. Col

Inventory of the effects of John Davies late a private of Captain George Bucklin's Company C of the 8th Regiment of U.S. (Col'd) Cavalry Volunteers, who was enrolled as a private at Providence in the State of Rhode Island on the 18 day of August 1863, and mustered into the service of the United States as a private on the 14 day of Sept 1863, at Prov RI in Company C, 8th Regiment of U.S. Col'd Cavalry Volunteers, to serve 3 years or during the war; he was born in Philadelphia in the State of Penn; he was 20 years of age, 5 feet 4 inches high, Dark complexion, Dark eyes, Dark hair, and by occupation, when enrolled, a Shoemaker; he died in Battalion Hospital, at Fort Jackson La on the 24th day of August 1864, by reason of Congestive fever

INVENTORY.

Articles.	No.	Articles.	No.	Articles.	No.
Hats		Pairs trowsers		Knapsacks	
Caps		Pairs flannel drawers			
Forage caps		Pairs cotton drawers			
Great coats		Flannel shirts			
Uniform coats		Cotton shirts			
Uniform jackets		Pairs boots			
Flannel sack coats		Pairs shoes			
Blouses		Pairs socks			
Stable frocks		Blankets			
Fatigue overalls		Haversacks			

Money.		
	Specie	$
	Notes	$

I CERTIFY, ON HONOR, that the above inventory comprises all the effects of _____, deceased, and that the effects are in the hands of _____ at _____ to be disposed of by a Council of Administration.

(DUPLICATES.)

George Bucklin
Capt 8th Mx Col'd Cavalry
Commanding the Company.

STATION: Fort Jackson La

DATE: August 24 1864

[A. G. O. No. 104.]

00 24, 11 U.S.Col'd H.A. 5th

Brant | Grant

CARD NUMBERS.

1	6197882	26	
2	6198038	27	
3	6198185	28	
4	6198344	29	
5	6198501	30	
6	6198657	31	
7	6198802	32	
8	6198945	33	
9	6199085	34	
10	6199220	35	
11	6199345	36	
12	6199540	37	
13	6181978	38	
14	6181983	39	
15	6181988	40	
16	6199894	41	
17	9125635	42	
18		43	
19		44	
20		45	
21		46	
22		47	
23		48	
24		49	
25		50	

Book Mark:

See also

G | 11 H. Art'y. | U.S.C.T.

Samuel Gaines

....., Co. K, 11 Reg't U. S. Col'd H. Art'y.

Appears on

Company Descriptive Book

of the organization named above.

DESCRIPTION.

Age 21 years; height 5 feet 8 inches.

Complexion DK

Eyes Blk; hair Blk

Where born Richmond Va

Occupation Hostler

ENLISTMENT.

When Dec 4', 186 .

Where Prov P. D.

By whom J C Engly; term 3 y'rs.

Remarks: Deserted from Camp Parapet La Aug 20, 1865

Griffith

(3553) Copyist.

G | 11 H. Art'y. | U.S.C.T.

Samuel Gaines

Pt, Co. K, 14 Reg't R. I. Col'd H. Art'y.*

Age 21 years.

Appears on

Company Muster-in Roll

of the organization named above. Roll dated Cp. nr. Providence R.I. Dec 17, 1863.

Muster-in to date Dec 17, 1863.

Joined for duty and enrolled:

When Dec 5, 1863

Where Providence R.I.,

Period 3 years.

Valuation of horse, $100

Valuation of horse equipments, $100

Remarks:

* This organization subsequently became Co. K, 11 Reg't U. S. Colored Heavy Artillery.

Book mark:

J. H. Stewart

Copyist.

G | 11 H. Art'y. | U.S.C.T.

Samuel Gaines

Pt, Co. K, 14 Reg't R. I. Col'd H. Art'y.*

Appears on

Company Muster Roll

for Dec 17 to Dec 31, 1863

Present or absent Present

Stoppage, $ 100 for

Due Gov't, $ 100 for

Valuation of horse, $ 100

Valuation of horse equipments, $ 100

Remarks:

*This organization subsequently became Co. K, 11 Reg't U. S. Colored Heavy Artillery.

Book mark:

J. H. Stewart

 Copyist.

G | 11 H. Art'y. | U.S.C.T.

Samuel Gaines

Pl, Co. K, 14 Reg't R. I. Col'd H. Art'y.*

Appears on

Company Muster Roll

for Jan & Feb, 1864.

Present or absent Present

Stoppage, $ 100 for

Due Gov't, $ 100 for

Valuation of horse, $ 100

Valuation of horse equipments, $ 100

Remarks:

*This organization subsequently became Co. K, 11 Reg't U. S. Colored Heavy Artillery.

Book mark:

J H Seward

(358) *Copyist.*

G | 11 H. Art'y. | U.S.C.T.

Samuel Gaines

Pt, Co. K, 14 Reg't R. I. Col'd H. Art'y.*

Appears on

Company Muster Roll

for Mch & Apl, 1864.

Present or absent Present

Stoppage, $ 100 for

Due Gov't, $ 100 for

Valuation of horse, $ 100

Valuation of horse equipments, $ 100

Remarks: Stop for screw driver & gun sling

*This organization subsequently became Co. K, 11 Reg't U. S. Colored Heavy Artillery.

Book mark:

J. H. Stewart

(358) *Copyist.*

C | 11 H. Art'y. | U.S.C.T.

Samuel Gaines

Pvt., Co. K, 8 Reg't U. S. Col'd H. Art'y.*

Appears on

Company Muster Roll

for May & June, 1864.

Present or absent Present

Stoppage, $ 100 for

Due Gov't, $ 100 for

Valuation of horse, $ 100

Valuation of horse equipments, $ 100

Remarks:

†This organization subsequently became Co. K, 11 Reg't U. S. Colored Heavy Artillery.

Book mark:

R Stewart

(358) Copyist.

C | 11 H. Art'y. | U.S.C.T.

Samuel James

Pvt, Co. K, 11 Reg't U. S. Col'd H. Art'y.

Appears on

Company Muster Roll

for July & Aug, 186 4.

Present or absent Present

Stoppage, $ 100 for

Due Gov't, $ 80/100 for C & G.E. lost or destroyed.

Valuation of horse, $ 100

Valuation of horse equipments, $ 100

Remarks: Free on 19 Apr/61 $16 per Month due from enlistment to April 30/64.

Book mark:

(358) Copyist.

	11 H. Art'y.	U.S.C.T.

Samuel Baines

Pvt., Co. K, 11 Reg't U. S. Col'd H. Art'y.

Appears on

Company Muster Roll

for Sept & Oct, 1864.

Present or absent Present.

Stoppage, $ 100 for

Due Gov't, $ 45/100 for Ordnance lost or destroyed

Valuation of horse, $ 100

Valuation of horse equipments, $ 100

Remarks:

Book mark:

(358) Howard

Copyist.

C | 11 H. Art'y. | U.S.C.T.

Samuel Sanni

Pvt, Co. K, 11 Reg't U. S. Col'd H. Art'y.

Appears on

Company Master Roll

for Nov & Dec, 1864.

Present or absent Present

Stoppage, $ 100 for

Due Gov't, $ 45/100 for Ordnance

Valuation of horse, $ 100

Valuation of horse equipments, $ 100

Remarks: Drew U.S. for C. & G. C. $ 12.

Book mark:

(358) Samuel Copyist.

G | 11 H. Art'y. | U.S.C.T.

Edmund Haines

Pvt, Co. K, 11 Reg't U. S. Col'd H. Art'y.

Appears on

Company Muster Roll

for Jan & Feb, 1865.

Present or absent Present.

Stoppage, $ ---- 100 for ----

Due Gov't, $ 45 100 for Ordnance

Valuation of horse, $ ---- 100

Valuation of horse equipments, $ ---- 100

Remarks: Drg. Ord. Sup.

C. & G. C. $1.00

Book mark: ----

(358) Edmund

Copyist.

C. | 11 H. Art'y. | U.S.C.T.

Emanuel Gainez

Pvt, Co. K, 11 Reg't U. S. Col'd H. Art'y.

Appears on

Company Muster Roll

for March & April, 1865.

Present or absent Present

Stoppage, $ 100 for

Due Gov't, $ 45/100 for Ordnance

Valuation of horse, $ 100

Valuation of horse equipments, $ 100

Remarks: Stoppage $10.00 by F.O.C. Gen'l Ord. No 9. Due U S for C. & G. E. $1.03

Book mark:

Emanuel

(358) Copyist.

G | 11 H. Art'y. | U.S.C.T.

Samuel Gaines

Pvt, Co. K, 11 Reg't U. S. Col'd H. Art'y.

Appears on

Company Muster Roll

for May & June, 186 5.

Present or absent Present

Stoppage, $ 100 for

Due Gov't, $ 07/100 for C & G E

Valuation of horse, $ 100

Valuation of horse equipments, $ 100

Remarks; Stoppage $10.00 by sentence
G.C.M. Gen. O. #9. dated Apr.
19th 1865

Book mark:

Greenbur
Copyist.

G | 11 H. Art'y. | U.S.C.T.

Samuel Gains

Pvt, Co. K, 11 Reg't U. S. Col'd H. Art'y.

Appears on

Company Muster Roll

for July & Aug, 1865.

Present or absent

Stoppage, $ 100 for

Due Gov't, $7 92/100 for Clothing

lost and destroyed

Valuation of horse, $ 100

Valuation of horse equipments, $ 100

Remarks: Deserted Aug. 20th 1865 from Camp Parapet, La.

Book mark:

(358) Copyist.

G | 11 H. Atty. | U.S.C.T.

Samuel Gaines

Pvt., Co. K, 11 Reg't U. S. Col'd H. Atty.

Appears on

Descriptive List of Deserters

dated Aug. 31, 1865.

Deserted:

When Aug. 20, 1865.

Where Camp Pontchartrain, La.

Arrested:

When ....., 186 .

Where .....

Remarks: .....

Book mark: .....

M. O. Gilbert,

(351) *Copyist.*

G | 11th Aty. | **U.S.C.T.**

Samuel Gaines

Pvt., Co. K, 11 Reg't U. S. Col'd Hvy Aty

Appears on

Descriptive List of Deserters

dated Sept. 1, 1865.

Deserted:

When Aug. 20, 1863.

Where Camp Parapet, La.

Arrested:

When ....., 186 .

Where .....

Remarks: .....

Book mark: .....

H. O. Gilbert,

(851) *Copyist.*

G 11th H. Art'y. U.S.C.T.

Samuel Gaines

Pvt., Co. K, 11 Reg't U. S. Col'd H. Art'y.

Appears on

Descriptive List of Deserters

dated Sept. 12, 1863.

Deserted:

When Aug. 21, 1863.

Where Camp Parapet, La.

Arrested:

When ....., 186 .

Where .....

Remarks: .....

Book mark: .....

M. O. Gilbert,

(351) *Copyist.*

G | 11 H. Art'y. | U.S.C.T.

Samuel Gaines

Pvt., Co. K, 11 Reg't U. S. Col'd H. Art'y.

Appears on **Co. Muster-out Roll,** dated New Orleans, La, Oct. 2, 186 5.

Muster-out to date ....., 186 .

Last paid to Feb. 28, 1865.

Clothing account:

Last settled....., 186 ; drawn since $..... 100

Due soldier $..... 100; due U. S. $ 34 100

Am't for cloth'g in kind or money adv'd $..... 100

Due U. S. for arms, equipments, &c., $ 31 84/100

Bounty paid $ None 100; due $ None 100

Remarks: Joined at Orig. Organ. Stockpaid 1 Musket & Equipments complete, 1 Ax, 1 Shelter tent, 3 Cross Cannons, 6 Nos. 7" & 1 Mosquito Bar lost. Decided Aug. 20, '66. Camp. Parapet, La.
* Roll torn.

Book mark: .....

Gaucher

(361) *Copyist.*

Gains Samuel

P, Co. , 11 Reg't Mass.

3 Enclosures.

Bed Cards		Final Statements	
Burial Records		Furloughs or L. of A.	
Certs. of Dis. for Discharge		Med. Certificates	
C. M. Charges	2	Med. Des. Lists	
Descriptive Lists		Orders	
Discharge Certificates		Pris. of War Record	
Enlistment Papers	1	Resignations	

Other papers relating to—

Admission to Hosp'l		Furlough or L. of A.	
Casualty Sheet		Med. Examination	
Confinement		Misc. Information	1
Contracts		Pay or Clothing	
Death or Effects		Personal Reports	
Desertion	1	Rank	
Discharge from Hosp'l		Transfer to Hosp'l	
Discharge from Service		Transfer to V. R. C.	
Duty		Transportation	

DECLARATION OF RECRUIT.

I, Samuel Gaines desiring to VOLUNTEER as a Soldier in the *ARMY OF THE UNITED STATES*, for the term of Three Years do declare that I am Twenty one years and months of age; that I have never been discharged from the United States service on account of disability or by sentence of a court martial, or by order, before the expiration of a term of enlistment; and I know of no impediment to my serving honestly and faithfully as a soldier for Three Years

Given at Providence R I
The fourth day of December 1863

Witness:
Jas J Downey

his
Samuel + Gaines
mark

11 U S C H A, 1

No. 4

Samuel Gaines

Volunteered at Providence R I

Volunteer 4

Enlisted 3 Dec 1863

By J. G. Gurley Capt

19 Regiment of Artillery

enlistment; last served in Company ( ) Regiment of

Reg't of

Discharged 18

CONSENT IN CASE OF MINOR.

I, Do CERTIFY that I am the of ; that the said is years of age; and I do hereby freely give my CONSENT to his volunteering as a SOLDIER in the ARMY OF THE UNITED STATES for the period of

Given at
The day of

Witness:

VOLUNTEER ENLISTMENT.

State of Rhode Island Town of Providence

I, Samuel Gaines born in Richmond

in the State of Virginia aged Twenty one years, and by occupation

a Hostler DO HEREBY ACKNOWLEDGE to have volunteered this Fourth

day of December 1863 to serve as a SOLDIER in the ARMY OF THE UNITED STATES OF AMERICA, for the period of Three Years, unless sooner discharged by proper authority: Do also agree to accept such bounty, pay, rations and clothing, as are, or may be, established, by law for volunteers. And I, Samuel Gaines do solemnly swear, that I will bear true faith and allegiance to the *United States of America*, and that I will serve them honestly and faithfully against all their enemies or opposers whomsoever; and that I will observe and obey the orders of the President of the United States, and the orders of the officers appointed over me, according to the Rules and Articles of War.

his
Samuel × Gaines
mark

Sworn and Subscribed to, at Providence R.I.
this Fourth day of December 1863
BEFORE Wm H Pendergast
Justice of the Peace

I CERTIFY, ON HONOR, That I have carefully examined the above-named Volunteer, agreeable to the General Regulations of the Army, and that, in my opinion, he is free from all bodily defects and mental infirmity, which would, in any way, disqualify him from performing the duties of a soldier.

Johnson Sanders M.D.

EXAMINING SURGEON.

I CERTIFY, ON HONOR, That I have minutely inspected the Volunteer, Daniel Gaines previously to his enlistment, and that he was entirely sober when enlisted; that to the best of my judgment and belief, he is of lawful age; and that, in accepting him as duly qualified to perform the duties of an able-bodied soldier, I have strictly observed the Regulations which govern the recruiting service. This soldier has *eyes* *hair* *complexion*, is *feet*, *inches high*.

14 *Regiment of* R I H A *Volunteers.*

RECRUITING OFFICER.

Gains Samuel
Private Co. K 11th N.Y.C.A. 47.

Charge & Specification
: against.

Charge and Specification preferred against Samuel Gaines, Private Co. K. 11. U.S.C.A. (Col.)

Charge.— Neglect of duty.

Specification.— In this that Samuel Gaines Private Co. K. 11. U.S.C.A. (Col.) without being regularly relieved did leave his post of duty on guard at Camp Casaphere La. during the night of April 8th 1865.

All this at Camp Casaphere La.

J. L. Belcher
2nd. Lt. 11. U.S.C.A. (Col.)
Officer preferring Charge

Witness
J. L. Belcher 2nd. Lt. 11. U.S.C.A. (Col.)

Office of Provost-Marshal
Parish of Jefferson
Carrollton La June 14, 1861-

Henry J. S.
Clerk for Provost Marshal Offic

Forwards under guard
Wm Samuel Gaines having
been arrested in Carrollton
having no pass.

Rec'd Baton Rouge June 14th 1865-

Office Provost Marshal, Parish of Jefferson,

Carrollton, June 14" 1865.

Commanding Officer
11th N. H. S. C. a Navy

Sir.

I herewith send
you under Guard Samuel Gains Private
of your Command arrested by a Police
officer at 1 oclock last night Drunk
and having no Pass.

I am Sir
Your Obdt Servt
J. H. Barry
Pro. Mar.

To be confined till further orders and this Paper to be
returned and returned.

Benj. D. James
2nd Lt. & A.A.A.G.

Haines Samuel

Priv Co K 11 U S C Arty

Charge and Specification
preferred against

Recd June 24/65

Recd Balt Md 2n June 22d 1865

12
10

Charge and Specification preferred against Private Samuel Gaines, Co K, 11th U.S.C.A. (A.)

Charge - "Conduct to the prejudice of Good Order and Military Discipline."

Specification - That Private Samuel Gaines, Co K, 11th Regt U.S.C.A. (A.) did cut the pocket of Private Robert Lewis, Co I, 11th Regt U.S.C.A. (A.) in an attempt to steal from him this at Camp Parapet La., on the morning of June 20th, 1865.

W. F. Jansey,
1st Lt. 11th U.S.C.A. (A.)

Witness.

Private Robert Lewis Co I. 11th U.S.C.A. (A.)

Mr. Ellsbrook

Samuel Gaines

C "K" 11 M.S.C.A. Heavy

Adjutant General's Office,

COLORED TROOPS BRANCH,

Jany 11th, 1876

Mr Ellenbrook Vol. ..... C. T., 187

Wanted in the case of *Samuel Gaines*, Co. *"K"*,

11th Reg't *U.S.C.H.A. Artly*

Copy of G.O. No 9

Muster Rolls for March and

April 65 reports him Present with remark,

"Stoppage $10.00 by JOBM G.O. 9.

Respectfully,

Wm A. Woodward

Chief Clerk.

J. A. H.

Adjutant General's Office,

Div. of Discontinued Cases.

Jan 21, 1876.

Vol. C. T., 187

Reply in case of *Samuel Gaines*, Co. *K*,

11th Reg't *U.S.C.H. Artly.*

G.C.M.O. 9. H.Q.A. *3 Battn 11 U.S.C.H.A.* Apr. 19. 65.

Charge. — *Neglect of duty.* — *Findings* — *Guilty.*

— *Sentence.* — *Two weeks at hard labor and*

the loss of ten dollars per month from his monthly

pay for one month. — *Approved.* ———

Case 1, 11 U.S. Col'd H. Art'y.

Smith | Smith

CARD NUMBERS.

1 6188946	26
2 6189091	27
3 6189238	28
4 6189384	29
5 6189527	30
6 6189671	31
7 6189807	32
8 6189936	33
9 6190062	34
10 6190196	35
11 6190326	36
12 6190456	37
13 6190583	38
14 9124891	39
15	40
16	41
17	42
18	43
19	44
20	45
21	46
22	47
23	48
24	49
25	50

Book Mark:

See also

E | **11 H. Art'y.** | **U.S.C.T.**

John Cainor

, Co. E, 11 Reg't U. S. Col'd H. Art'y.

Appears on

Company Descriptive Book

of the organization named above.

DESCRIPTION.

Age 22 years; height 5 feet 7 inches.

Complexion Dk.

Eyes Blk.; hair Blk.

Where born Charles City, Maryland.

Occupation Farmer.

ENLISTMENT.

When Sept. 30, 1863.

Where Prov, R.I.

By whom J. C. Engley; term 3 y'rs.

Remarks:

O. J. Markle.

(383y) *Copyist.*

G | 11 H. Art'y. | U.S.C.T.

John Gainor

Pvt., Co. E, 14 Reg't R. I. Col'd H. Art'y.*

Age 22 years.

Appears on

Company Muster-in Roll

of the organization named above. Roll dated Providence, R. I., Oct. 5, 1863.

Muster-in to date Oct. 5, 1863.

Joined for duty and enrolled:

When Sept. 30, 186 .

Where Prov., R. I.

Period 3 years.

Valuation of horse, $ 100

Valuation of horse equipments, $ 100

Remarks: Providence, R. I. Volr.

* This organization subsequently became Co. E, 11 Reg't U. S. Colored Heavy Artillery.

Book mark:

Chandler

Copyist.

G | 11 H. Art'y. | U.S.C.T.

John Gainor

Pvt., Co. E, 14 Reg't R. I. Col'd H. Art'y.*

Appears on

Company Muster Roll

for Oct. 6 to Dec. 31, 1863.

Present or absent Present

Stoppage, $ 100 for

Due Gov't, $ 100 for

Valuation of horse, $ 100

Valuation of horse equipments, $ 100

Remarks:

*This organization subsequently became Co. E, 11 Reg't U. S. Col'd Heavy Artillery.

Book mark:

C. Chandler

(358) *Copyist.*

G | 11 H. Art'y. | U.S.C.T.

John Gainor

Pvt., Co. E, 14 Reg't R. I. Col'd H. Art'y.*

Appears on

Company Muster Roll

for Jan. & Feb., 186 4.

Present or absent Present

Stoppage, $ 100 for

Due Gov't, $ 100 for

Valuation of horse, $ 100

Valuation of horse equipments, $ 100

Remarks: Due Laundress $1.75

*This organization subsequently became Co. E, 11 Reg't U. S. Col'd Heavy Artillery.

Book mark:

C Chandler

(358) *Copyist.*

G | 11 H. Art'y. | U.S.C.T.

John Gainor

Pvt., Co. E, 14 Reg't R. I. Col'd H. Art'y.*

Appears on

Company Muster Roll

for March & April, 1864.

Present or absent Present

Stoppage, $ 100 for

Due Gov't, $ 100 for

Valuation of horse, $ 100

Valuation of horse equipments, $ 100

Remarks: Due Laundress .75

*This organization subsequently became Co. E, 11 Reg't U. S. Col'd Heavy Artillery.

Book mark:

C Chandler

(358) Copyist.

G | 11 H. Art'y. | U.S.C.T.

John Gainor

Pvt., Co. E, 8 Reg't U. S. Col'd H. Art'y.*

Appears on

Company Muster Roll

for May & June, 1864.

Present or absent Present

Stoppage, $ 100 for

Due Gov't, $ 100 for

Valuation of horse, $ 100

Valuation of horse equipments, $ 100

Remarks: Due Laundress, 75~

*This organization subsequently became Co. E, 11 Reg't U. S. Colored Heavy Artillery.

Book mark:

C Chandler

Copyist.

11 H. Art'y. | U.S.C.T.

[illegible], Co. E, 11 Reg't U. S. Col'd H. Art'y.

Appears on

Company Muster Roll

for [illegible], 186[illegible].

Present or absent [illegible]

Stoppage, $ 100 for

Due Gov't, $ 100 for

Valuation of horse, $ 100

Valuation of horse equipments, $ 100

Remarks: Fract Sept 19 - 1864.

Book mark:

[illegible]

(358) *Copyist.*

G | 11 H. Art'y. | U.S.C.T.

John Lamott

Pvt., Co. E, 11 Reg't U. S. Col'd H. Art'y.

Appears on

Company Muster Roll

for Sept. & Oct., 186 4.

Present or absent Present

Stoppage, $ 100 for

Due Gov't, $ 100 for

Valuation of horse, $ 100

Valuation of horse equipments, $ 100

Remarks: Enl. Aug. 9-1864.
Mus. Oct. 14 1865

Book mark:

Hattaway

(358) *Copyist.*

11 H. Art'y. | U.S.C.T.

Full Enlisted

[illegible], Co. E, 11 Reg't U. S. Col'd H. Art'y.

Appears on

Company Muster Roll

for [illegible], 186[illegible].

Present or absent [illegible]

Stoppage, $.....100 for .....

.....

Due Gov't, $.....100 for .....

.....

Valuation of horse, $.....100

Valuation of horse equipments, $.....100

Remarks: Enlisted April 19-1864

Deserted August 9th

.....

.....

.....

.....

.....

.....

Book mark: .....

[illegible]

(358) *Copyist.*

11 H. Art'y. | U.S.C.T.

Joseph Lawson

....., Co. E, 11 Reg't U. S. Col'd H. Art'y.

Appears on

Company Muster Roll

for ..... Jan'y & Feb'y ....., 1865.

Present or absent ..... Present .....

Stoppage, $.....100 for .....

.....

Due Gov't, $.....100 for .....

.....

Valuation of horse, $.....100

Valuation of horse equipments, $.....100

Remarks: .....

.....

.....

.....

.....

.....

.....

.....

.....

Book mark: .....

.....

(358) Copyist.

11 H. Art'y. | U.S.C.T.

[illegible], Co. E, 11 Reg't U. S. Col'd H. Art'y.

Appears on

Company Muster Roll

for [illegible], 1865.

Present or absent [illegible]

Stoppage, $ 100 for

Due Gov't, $ 100 for

Valuation of horse, $ 100

Valuation of horse equipments, $ 100

Remarks:

Book mark:

[illegible]

(358) *Copyist.*

G | 11 H. Art'y. | U.S.C.T.

John Lainor

Pvt., Co. E, 11 Reg't U. S. Col'd H. Art'y.

Appears on

Company Muster Roll

for May and June, 1865.

Present or absent Present.

Stoppage, $ 100 for

Due Gov't, $ 100 for

Valuation of horse, $ 100

Valuation of horse equipments, $ 100

Remarks:

Book mark:

(358) J. D. Jones Copyist.

G | 11 H. Art'y. | U.S.C.T.

John Gainor

Priv., Co. E, 11 Reg't U. S. Col'd H. Art'y.

Appears on

Company Muster Roll

for July and August, 1865.

Present or absent Present.

Stoppage, $ ---- 100 for ----

Due Gov't, $ ---- 100 for ----

Valuation of horse, $ ---- 100

Valuation of horse equipments, $ ---- 100

Remarks: Stop for one Reg'l scabbard .56; Cross Cannon .02; one eagle .02.

Book mark: ----

(358) J. B. Jones *Copyist.*

G | 11 H. Art'y. | U.S.C.T.

John Gainor

Pvt., Co. E, 11 Reg't U. S. Col'd H. Art'y.

Appears on **Co. Muster-out Roll,** dated

New Orleans, La., Oct. 2, 1865.

Muster-out to date Oct. 2, 1865.

Last paid to June 30, 1865.

Clothing account:

Last settled ....., 186 ; drawn since $ 100

Due soldier $ ..... 100 ; due U. S. $ 10/100

Am't for cloth'g in kind or money adv'd $ 100

Due U. S. for arms, equipments, &c., $ 100

Bounty paid $ none 100 ; due $ 100 00/100

Remarks: Joined at Org. Org. Hdq. Service unknown. Recds retained 6.00, one haversack 56, one Mex. dollar 1.70, one X Canteen 02, one eagle, 02.

Book mark: V. 121, P. 16, '71

(361) J. B. Jones *Copyist.*

Garnor John

---, Co. ---, ---Reg't Mass

/ **Enclosures.**

Bed Cards ----	Final Statements ----
Burial Records ----	Furloughs or L. of A. ----
Certs. of Dis. for Discharge ----	Med. Certificates ----
C. M. Charges ----	Med. Des. Lists ----
Descriptive Lists ----	Orders ----
Discharge Certificates ----	Pris. of War Record ----
Enlistment Papers ---- /	Resignations ----

Other papers relating to—

Admission to Hosp'l ----	Furlough or L. of A. ----
Casualty Sheet ----	Med. Examination ----
Confinement ----	Misc. Information ----
Contracts ----	Pay or Clothing ----
Death or Effects ----	Personal Reports ----
Desertion ----	Rank ----
Discharge from Hosp'l ----	Transfer to Hosp'l ----
Discharge from Service ----	Transfer to V. R. C. ----
Duty ----	Transportation ----
----	----

DECLARATION OF RECRUIT.

I, John Lennon desiring to VOLUNTEER as a Soldier in the *ARMY OF THE UNITED STATES*, for the term of Three Years do declare that I am 22 years and months of age; that I have never been discharged from the United States service on account of disability or by sentence of a court martial, or by order, before the expiration of a term of enlistment; and I know of no impediment to my serving honestly and faithfully as a soldier for Three Years

Given at New York

The 30 day of Sept 18 60

John Lennon

Witness:

Jno Leo Hammond Jr.

Volunteered at [illegible] *No.* 3

By Lt Kenney *Regiment of* 14th Regt NY State Militia

enlistment; last served in Company ( )

Reg't of [illegible]

Discharged [illegible] 18

11 U.S.C., H. & L.

CONSENT IN CASE OF MINOR.

I, Do CERTIFY that I am the of ; that the said is years of age; and I do hereby freely give my CONSENT to his volunteering as a SOLDIER in the ARMY OF THE UNITED STATES for the period of

Given at

The day of

Witness

VOLUNTEER ENLISTMENT.

State of Rhode Island

Town of Providence

I, John Gannon born in Charles Co

in the State of Maryland aged Twenty two years, and by occupation a Painter

DO HEREBY ACKNOWLEDGE to have volunteered this 30

day of December 18 63 to serve as a SOLDIER in the ARMY OF THE UNITED STATES OF AMERICA, for the period of three Years, unless sooner discharged by proper authority: Do also agree to accept such bounty, pay, rations and clothing, as are, or may be, established, by law for volunteers. And I, John Gannon do solemnly swear, that I will bear true faith and allegiance to the *United States of America*, and that I will serve them honestly and faithfully against all their enemies or opposers whomsoever; and that I will observe and obey the orders of the President of the United States, and the orders of the officers appointed over me, according to the Rules and Articles of War.

Sworn and Subscribed to, at Prov R.I.

this 30 day of Dec 18 63

BEFORE S P Langworthy Maj

John his + Gannon mark

I CERTIFY, ON HONOR, That I have carefully examined the above-named Volunteer, agreeable to the General Regulations of the Army, and that, in my opinion, he is free from all bodily defects and mental infirmity, which would, in any way, disqualify him from performing the duties of a soldier.

Johnson Landon Surg U.S.A.

EXAMINING SURGEON.

I CERTIFY, ON HONOR, That I have minutely inspected the Volunteer, John Gannon previously to his enlistment, and that he was entirely sober when enlisted; that to the best of my judgment and belief, he is of lawful age; and that, in accepting him as duly qualified to perform the duties of an able-bodied soldier, I have strictly observed the Regulations which govern the recruiting service. This soldier has Black *eyes* Black *hair*, Black *complexion*, is 5 *feet*, 7 *inches high*.

1st *Regiment of* R.I. *Volunteers*,

Capt. A. Bedwell

J. W. Langley

RECRUITING OFFICER.

[illegible], 11 U.S.Col'd H.Art'y.

Privates

CARD NUMBERS.

1	6199738	26	
2	6199901	27	
3	6200057	28	
4	6200205	29	
5	6200345	30	
6	6200483	31	
7	6200612	32	
8	6200742	33	
9	6200872	34	
10	6200995	35	
11	6201119	36	
12	6201232	37	
13	9125789	38	
14		39	
15		40	
16		41	
17		42	
18		43	
19		44	
20		45	
21		46	
22		47	
23		48	
24		49	
25		50	

Book Mark:

See also

G | 11 H. Art'y. | U.S.C.T.

Samuel E. Gale

....., Co. L, 11 Reg't U. S. Col'd H. Art'y.

Appears on

Company Descriptive Book

of the organization named above.

DESCRIPTION.

Age 25 years; height 5 feet 7 inches.

Complexion DK

Eyes DK; hair DK

Where born Carlisle Penn

Occupation Farmer

ENLISTMENT.

When Dec 1, 1863.

Where Prov R I

By whom J C Engly; term 3 y'rs.

Remarks: Mustered out Oct 21 1865

Griffith

(3536) Copyist.

G | 11 H. Art'y. | U.S.C.T.

Samuel E Gale

Pvt., Co. L, 14 Reg't R. I. Col'd H. Art'y.*

Age 23 years.

Appears on

Company Muster-in Roll

of the organization named above. Roll dated Camp Ms Providence RI Dec 31, 1863.

Muster-in to date Dec 31, 1863.

Joined for duty and enrolled:

When Dec 1, 1863.

Where Providence R I.

Period 3 years.

Valuation of horse, $ 100

Valuation of horse equipments, $ 100

Remarks: Residence 1st Dist RI.

* This organization subsequently became Co. L, 11 Reg't U. S. Colored Heavy Artillery.

Book mark:

A B F Edwards

Copyist.

G | 11 H. Art'y. | U.S.C.T.

Samuel E Gale

Pvt, Co. L, 14 Reg't R. I. Col'd H. Art'y.*

Appears on

Company Muster Roll

for Jan & Feb, 186 4.

Present or absent Present

Stoppage, $ 100 for

Due Gov't, $ 100 for

Valuation of horse, $ 100

Valuation of horse equipments, $ 100

Remarks:

* This organization subsequently became Co. L, 11 Reg't U. S. Colored Heavy Artillery.

Book mark:

(358) S B. E. Edwards *Copyist.*

G | 11 H. Art'y. | U.S.C.T.

Samuel E Gale

Sol, Co. L, 14 Reg't R. I. Col'd H. Art'y.*

Appears on

Company Muster Roll

for Mar, & Apr, 1864.

Present or absent Present

Stoppage, $ 100 for

Due Gov't, $ 100 for

Valuation of horse, $ 100

Valuation of horse equipments, $ 100

Remarks:

* This organization subsequently became Co. L, 11 Reg't U. S. Colored Heavy Artillery.

Book mark:

J Mauley

(358) *Copyist.*

G. | 11 H. Art'y. | U.S.C.T.

Samuel E. Gale

Pvt., Co. L, 8 Reg't U. S. Col'd H. Art'y.*

Appears on

Company Muster Roll

for May & June, 1864.

Present or absent Present

Stoppage, $ 100 for

Due Gov't, $ 100 for

Valuation of horse, $ 100

Valuation of horse equipments, $ 100

Remarks: Rose U. S. for Ordnance $0.20

†This organization subsequently became Co. L, H Reg't U. S. Colored Heavy Artillery.

Book mark:

B. F. Edwards

(358) Copyist.

G. | 11 H. Art'y. | U.S.C.T.

Samuel E. Gales

Pvt., Co. L, 11 Reg't U. S. Col'd H. Art'y.

Appears on

Company Muster Roll

for July & Aug, 186 4.

Present or absent Present

Stoppage, $ 100 for

Due Gov't, $ 20/100 for Advanced

Valuation of horse, $ 100

Valuation of horse equipments, $ 100

Remarks: $6 for one month's pay due from enlistment to Apr 30/64
Free on Apr 19/61

Book mark:

Mauky

(358) Copyist.

G. | 11 H. Art'y. | U.S.C.T.

Samuel E. Gale.

Pvt., Co. L, 11 Reg't U. S. Col'd H. Art'y.

Appears on

Company Muster Roll

for Sept & Oct, 1864.

Present or absent present.

Stoppage, $ ~ 20/100 for ordnance

Due Gov't, $ 100 for

Valuation of horse, $ 100

Valuation of horse equipments, $ 100

Remarks: $60.00 per month back pay due from enlistment 10 April 30/64. Free on April 19/61.

Book mark:

(358) Baker, Copyist.

G. | 11 H. Art'y. | U.S.C.T.

Samuel E. Gale.

Pvt., Co. L, 11 Reg't U. S. Col'd H. Art'y.

Appears on

Company Muster Roll

for Nov. & Dec., 1864.

Present or absent present.

Stoppage, $ — 20/100 for ordnance.

Due Gov't, $ 100 for

Valuation of horse, $ 100

Valuation of horse equipments, $ 100

Remarks:

Book mark:

Baker,
Copyist.

(358)

G. | 11 H. Art'y. | U.S.C.T.

Samuel E. Gale.

Pvt., Co. L, 11 Reg't U. S. Col'd H. Art'y.

Appears on

Company Muster Roll

for Jan & Feb, 1865.

Present or absent present.

Stoppage, $ — 54/100 for ordnance

Due Gov't, $ 100 for

Valuation of horse, $ 100

Valuation of horse equipments, $ 100

Remarks:

Book mark:

Baker,
Copyist.

(358)

L. | 11 H. Art'y. | U.S.C.T.

Samuel E. Gale.

Pvt., Co. L, 11 Reg't U. S. Col'd H. Art'y.

Appears on

Company Muster Roll

for March & April, 1865.

Present or absent..... present.....

Stoppage, $— 43/100 for ordnance.....

Due Gov't, $..... 100 for .....

Valuation of horse, $..... 100

Valuation of horse equipments, $..... 100

Remarks:.....

Book mark:.....

Baker,
Copyist.

(358)

G | 11 H. Art'y. | U.S.C.T.

Samuel E. Gale

Pvt, Co. L, 11 Reg't U. S. Col'd H. Art'y.

Appears on

Company Muster Roll

for May & June, 1865.

Present or absent Present

Stoppage, $ 100 for

Due Gov't, $ 100 for

Valuation of horse, $ 100

Valuation of horse equipments, $ 100

Remarks: On daily duty as Provost Guard Carrollton La.

Book mark:

Murphy

(358) *Copyist.*

G | 11 H. Art'y. | U.S.C.T.

Samuel E Gale

Pvt, Co. L, 11 Reg't U. S. Col'd H. Art'y.

Appears on

Company Muster Roll

for July & Aug, 1865.

Present or absent Present

Stoppage, $ 100 for

Due Gov't, $ 100 for

Valuation of horse, $ 100

Valuation of horse equipments, $ 100

Remarks:

Book mark:

(358) Copyist.

G. | 11 H. Art'y. | U.S.C.T.

Samuel E. Gale

Pvt., Co. L, 11 Reg't U. S. Col'd H. Art'y.

Appears on **Co. Muster-out Roll,** dated New Orleans La., Oct 2, 1865.

Muster-out to date Oct 2, 1865.

Last paid to Feb 28, 1865.

Clothing account:

Last settled ....., 186 ; drawn since $ 100

Due soldier $ 9 87/100; due U. S. $ 100

Am't for cloth'g in kind or money adv'd $ 100

Due U. S. for arms, equipments, &c., $ 100

Bounty paid $ ..... 100; due $ 100

Remarks: Joined 1st Regt. Arg. Stoppage for (1) Musket & accts retained $6.00

Book mark : .....

Murphy

(361) *Copyist.*

Jabe Samuel

....., Co. ....., ... Reg't [redacted]

/ Enclosures.

Bed Cards	Final Statements .....
Burial Records	Furloughs or L. of A. .....
Certs. of Dis. for Discharge	Med. Certificates .....
C. M. Charges	Med. Des. Lists .....
Descriptive Lists	Orders .....
Discharge Certificates	Pris. of War Record .....
Enlistment Papers	Resignations .....

Other papers relating to—

Admission to Hosp'l	Furlough or L. of A. .....
Casualty Sheet	Med. Examination .....
Confinement	Misc. Information .....
Contracts	Pay or Clothing .....
Death or Effects	Personal Reports .....
Desertion	Rank .....
Discharge from Hosp'l	Transfer to Hosp'l .....
Discharge from Service	Transfer to V. R. C. .....
Duty	Transportation .....
.....	.....

DECLARATION OF RECRUIT.

I, Samuel F Gale desiring to VOLUNTEER as a Soldier in the *ARMY OF THE UNITED STATES*, for the term of three years do declare that I am 25 years and months of age; that I have never been discharged from the United States service on account of disability or by sentence of a court martial, or by order, before the expiration of a term of enlistment; and I know of no impediment to my serving honestly and faithfully as a soldier for three years

Given at Providence

The 14 day of Dec 1863

Witness: D Ohare

Sam'l F Gale
mark

11 U.S.C.T.

No.

Samuel F. Gale

Volunteered at Providence

Dec 14 1863,

By Maj C Bagley

Regiment of Light Cavalry

enlistment; last served in Company ( )

Reg't of

Discharged

18

Jul 11 1871

CONSENT IN CASE OF MINOR.

I, Do Certify that I am the

of ; that the said

is years of age; and I do hereby freely give

my CONSENT to his volunteering as a SOLDIER in the ARMY OF THE UNITED STATES for the period of

Given at

The day of

Witness:

VOLUNTEER ENLISTMENT.

State of Rhode Island Town of Lincoln

I, Samuel E. Gale born in Carlisle

in the State of Penn aged 25 years, and by occupation

a Farmer DO HEREBY ACKNOWLEDGE to have volunteered this 1st

day of Dec 1863 to serve as a SOLDIER in the ARMY OF THE UNITED STATES OF AMERICA, for the period of 3 years, unless sooner discharged by proper authority: Do also agree to accept such bounty, pay, rations and clothing, as are, or may be, established, by law for volunteers. And I, Samuel E. Gale do solemnly swear, that I will bear true faith and allegiance to the *United States of America*, and that I will serve them honestly and faithfully against all their enemies or opposers whomsoever; and that I will observe and obey the orders of the President of the United States, and the orders of the officers appointed over me, according to the Rules and Articles of War.

Sworn and Subscribed to, at Lincoln

this 1st day of Dec 1863

BEFORE Mr John L Sayles Pettie Mag

his
Samuel + E Gale
mark

I CERTIFY, ON HONOR, That I have carefully examined the above-named Volunteer, agreeable to the General Regulations of the Army, and that, in my opinion, he is free from all bodily defects and mental infirmity, which would, in any way, disqualify him from performing the duties of a soldier.

John Sanders M.D.

EXAMINING SURGEON.

I CERTIFY, ON HONOR, That I have minutely inspected the Volunteer, Samuel E. Gale previously to his enlistment, and that he was entirely sober when enlisted; that to the best of my judgment and belief, he is of lawful age; and that, in accepting him as duly qualified to perform the duties of an able-bodied soldier, I have strictly observed the Regulations which govern the recruiting service. This soldier has Dark *eyes* Black *hair* Dark *complexion*, is 5 *feet*, 7 [illegible] *inches high*.

John Sayles

Maj 14th *Regiment of* Hy Arty *Volunteers*,

RECRUITING OFFICER.

DECLARATION OF RECRUIT.

I, Samuel E Gale desiring to VOLUNTEER as a Soldier in the *ARMY OF THE UNITED STATES*, for the term of three Years do declare that I am 25 years and months of age; that I have never been discharged from the United States service on account of disability or by sentence of a court martial, or by order, before the expiration of a term of enlistment; and I know of no impediment to my serving honestly and faithfully as a soldier for three Years

Given at Providence

The 1st day of Dec 1863

Witness: L Sheiz

Sam'l E Gale
mark

11 U.S.C.A.

No.

Samuel E. Gale

Private

Volunteered at Providence

Dec 1st 1863,

To Serve Three Years

By Maj C C Gayley

Reg't Regiment of Eng Corps

enlistment; last served in Company ( )

Reg't of

Discharged 18

JUL 11 1871 ADJUTANT

CONSENT IN CASE OF MINOR.

I, Do Certify that I am the of ; that the said is years of age; and I do hereby freely give my CONSENT to his volunteering as a SOLDIER in the ARMY OF THE UNITED STATES for the period of

Given at

The day of

Witness:

VOLUNTEER ENLISTMENT.

State of Rhode Island Town of Lincoln

I, Samuel E. Gale born in Carlisle

in the State of Penn aged 25 years, and by occupation a Farmer DO HEREBY ACKNOWLEDGE to have volunteered this 1st day of Dec 1863 to serve as a SOLDIER in the ARMY OF THE UNITED STATES OF AMERICA, for the period of 3 years, unless sooner discharged by proper authority: Do also agree to accept such bounty, pay, rations and clothing, as are, or may be, established, by law for volunteers. And I, Samuel E. Gale do solemnly swear, that I will bear true faith and allegiance to the *United States of America*, and that I will serve them honestly and faithfully against all their enemies or opposers whomsoever; and that I will observe and obey the orders of the President of the United States, and the orders of the officers appointed over me, according to the Rules and Articles of War.

Sworn and Subscribed to, at Lincoln this 1st day of Dec 1863 BEFORE Mr John L Sayles Pettis Mag

his Samuel + E Gale mark

I CERTIFY, ON HONOR, That I have carefully examined the above-named Volunteer, agreeable to the General Regulations of the Army, and that, in my opinion, he is free from all bodily defects and mental infirmity, which would, in any way, disqualify him from performing the duties of a soldier.

John [redacted] Sanders M.D.

EXAMINING SURGEON.

I CERTIFY, ON HONOR, That I have minutely inspected the Volunteer, Samuel E. Gale previously to his enlistment, and that he was entirely sober when enlisted; that to the best of my judgment and belief, he is of lawful age; and that, in accepting him as duly qualified to perform the duties of an able-bodied soldier, I have strictly observed the Regulations which govern the recruiting service. This soldier has Dark *eyes* Black *hair* Dark *complexion*, is 5 *feet*, 7 [redacted] *inches high*.

J Sayles

Maj 14th *Regiment of* Dy Arty *Volunteers*,

RECRUITING OFFICER.

Co. **K**, 11 U.S. Col'd H.A.

Ernest Sergeant

CARD NUMBERS.

1	6194289	26	
2	6194446	27	
3	619 4589	28	
4	619 4702	29	
5	6194841	30	
6	619 4980	31	
1	619 5114	32	
2	619 5246	33	
3	619 5378	34	
10	619 5508	35	
11	619 5840	36	
12	619 5770	37	
13	619 5896	38	
14	9125328	39	
15		40	
16		41	
17		42	
18		43	
19		44	
20		45	
21		46	
22		47	
23		48	
24		49	
25		50	

Book Mark:

See also

G | 11 H. Art'y. | U.S.C.T.

William Gale

----------, Co. H, 11 Reg't U. S. Col'd H. Art'y.

Appears on

Company Descriptive Book

of the organization named above.

DESCRIPTION.

Age 23 years; height 5 feet 10½ inches.

Complexion African

Eyes Brn; hair Blk

Where born Goshen NY.

Occupation Farmer

ENLISTMENT.

When Aug 11, 186 3.

Where Prov, RI.

By whom Hengler; term 3 y'rs.

Remarks: Appointed Corpl May 30/64. Promoted to Sergt, Dec 19/64 per Go. #43

W F Roe

(383*a*) *Copyist.*

G. | 11 H. Art'y. | U.S.C.T.

William Gale

Pri., Co. K, 14 Reg't R. I. Col'd H. Art'y.*

Age 23 years.

Appears on

Company Muster-in Roll

of the organization named above. Roll dated Providence R.I. Nov 23, 1863.

Muster-in to date Nov 23, 1863.

Joined for duty and enrolled:

When Nov. 11, 1863.

Where Providence R.I.

Period 3 years.

Valuation of horse, $ 100

Valuation of horse equipments, $ 100

Remarks: Residence Providence R.I.

* This organization subsequently became Co. K, 11 Reg't U. S. Colored Heavy Artillery.

Book mark:

Perry

Copyist.

2. | **11 H. Art'y.** | **U.S.C.T.**

William Gale

Pvt, Co. H, 14 Reg't R. I. Col'd H. Art'y.*

Appears on

Company Muster Roll

for 23 Nov to 31 Dec, 1863.

Present or absent Present

Stoppage, $ 100 for

Due Gov't, $ 100 for

Valuation of horse, $ 100

Valuation of horse equipments, $ 100

Remarks:

*This organization subsequently became Co. H, 11 Reg't U. S. Colored Heavy Artillery.

Book mark:

Perry

(355) *Copyist.*

G | 11 H. Art'y. | U.S.C.T.

William Gale

Pvt., Co. H, 14 Reg't R. I. Col'd H. Art'y.*

Appears on

Company Muster Roll

for Jan & Feb, 1864.

Present or absent Present

Stoppage, $ 100 for

Due Gov't, $ 100 for

Valuation of horse, $ 100

Valuation of horse equipments, $ 100

Remarks:

*This organization subsequently became Co. H, 11 Reg't U. S. Colored Heavy Artillery.

Book mark:

Perry

(358) *Copyist.*

G | 11 H. Art'y. | U.S.C.T.

William Gale

Corpl, Co. H, 14 Reg't R. I. Col'd H. Art'y.*

Appears on

Company Muster Roll

for Mch. & Apl, 1864.

Present or absent Present

Stoppage, $.....100 for .....

.....

.....

Due Gov't, $.....100 for .....

.....

Valuation of horse, $.....100

Valuation of horse equipments, $.....100

Remarks: Appointed Mar. 30, 1864 per Special Order No. 17, Acting

.....

.....

.....

*This organization subsequently became Co. H. 11 U. S. Col'd H. Art'y

Book mark: .....

Perry

(358) Copyist.

G. | 11 H. Art'y. | U.S.C.T.

William Gale

Corpl, Co. K, 8 Reg't U. S. Col'd H. Art'y.*

Appears on

Company Muster Roll

for May & June, 1864.

Present or absent Present

Stoppage, $ 100 for

Due Gov't, $ 100 for

Valuation of horse, $ 100

Valuation of horse equipments, $ 100

Remarks: Appointed Mar. 30, per S. O. No. 17, Dep for Canteen, Haversack

† This organization subsequently became Co. K, 11 Reg't U. S. Colored Heavy Artillery.

Book mark:

Perry

Copyist.

G | 11 H. Art'y. | U.S.C.T.

(William) Gale

Corp'l, Co. H, 11 Reg't U. S. Col'd H. Art'y.

Appears on

Company Muster Roll

for July & Aug., 186 4.

Present or absent Present

Stoppage, $ 100 for

Due Gov't, $ 100 for

Valuation of horse, $ 100

Valuation of horse equipments, $ 100

Remarks: Appointed May 30/64
per Special Order No. 17.
Stop for screw driver 23
Canteen 41 Haversack 42
Issued April 19, 1864.

Book mark:

W. A. Tyler

(358) *Copyist.*

G | 11 H. Art'y. | U.S.C.T.

William Gale

Corp'l, Co. H, 11 Reg't U. S. Col'd H. Art'y.

Appears on

Company Muster Roll

for Dated Oct 31, 1864.

Present or absent Present

Stoppage, $ 100 for

Due Gov't, $ 100 for

Valuation of horse, $ 100

Valuation of horse equipments, $ 100

Remarks: Appointed May 30/64
per S. O. # 17 Stop for
screw driver 23 Canteen
& Haversack 89
Drew Apr. 19, 1861.

Book mark:

(358) W. A. Tyler
Copyist.

9 | 11 H. Art'y. | **U.S.C.T.**

William Seale

Sergt, Co. H, 11 Reg't U. S. Col'd H. Art'y.

Appears on

Company Muster Roll

for Nov & Dec, 1864.

Present or absent Present

Stoppage, $ 100 for

Due Gov't, $ 100 for

Valuation of horse, $ 100

Valuation of horse equipments, $ 100

Remarks: Appointed Corp'l May 30/64. Promoted to Sergt Dec. 14/64 by order Col. Sypher. Stoppage for wiper & screwdriver 43, Canteen & Haversack 89

Book mark:

W A Tyler

(358) *Copyist.*

G | 11 H. Art'y. | U.S.C.T.

William Gale

Sergt., Co. H, 11 Reg't U. S. Col'd H. Art'y.

Appears on

Company Muster Roll

for Jan & Feb, 1865.

Present or absent Present

Stoppage, $ 100 for

Due Gov't, $ 100 for

Valuation of horse, $ 100

Valuation of horse equipments, $ 100

Remarks: appointed Corpl May 30/64. Promoted to Sergt Dec 19/64. Stop for one per 20

Book mark:

(358) W A Tyler *Copyist.*

G | 11 H. Art'y. | U.S.C.T.

William Gale

Sergt, Co. H, 11 Reg't U. S. Col'd H. Art'y.

Appears on

Company Muster Roll

for March & Apr, 186 5.

Present or absent Present

Stoppage, $ 100 for

Due Gov't, $ 100 for

Valuation of horse, $ 100

Valuation of horse equipments, $ 100

Remarks:

Book mark:

W A Taylor

(358) *Copyist.*

G. | 11 H. Art'y. | U.S.C.T.

William Hale

Sergt, Co. H, 11 Reg't U. S. Col'd H. Art'y.

Appears on

Company Muster Roll

for May and June, 1865.

Present or absent Present

Stoppage, $ 100 for

Due Gov't, $ 100 for

Valuation of horse, $ 100

Valuation of horse equipments, $ 100

Remarks:

Book mark:

Rhells

(358) *Copyist.*

D. | 11 H. Art'y. | U.S.C.T.

William Gale

Sergt., Co. H, 11 Reg't U. S. Col'd H. Art'y.

Appears on

Company Muster Roll

for July and Aug, 1865.

Present or absent Present

Stoppage, $ 100 for

Due Gov't, $ 100 for

Valuation of horse, $ 100

Valuation of horse equipments, $ 100

Remarks: Sick for bay - one - 2.25

Book mark:

R Hutt

Copyist.

G. | 11 H. Art'y. | U.S.C.T.

Williams Gale

Sergt., Co. H, 11 Reg't U. S. Col'd H. Art'y.

Appears on **Co. Muster-out Roll,** dated New Orleans La, Oct 2, 1865.

Muster-out to date Oct 2, 1865.

Last paid to June 30, 1865.

Clothing account:

Last settled ....., 186 ; drawn since $ 100

Due soldier $ 14 13/100; due U. S. $ 100

Am't for cloth'g in kind or money adv'd $ 100

Due U. S. for arms, equipments, &c., $ 100

Bounty paid $ 00 100; due $ 100 100

Remarks: Joined at orig'l. org'n. Private to May 30" 1864 then Corpl to Dec 19" 1864 Sergt for muskets and accoutrements sword and belt retained Sergt. Sergt for bayonet lost 225.

Book mark O. W. G., 1049. Feb. 17/66

Rhell

(361) *Copyist.*

Gale Williams

P, Co. 11, Reg't USCT

1 **Enclosures.**

Bed Cards	Final Statements
Burial Records	Furloughs or L. of A.
Certs. of Dis. for Discharge	Med. Certificates
C. M. Charges	Med. Des. Lists
Descriptive Lists	Orders
Discharge Certificates	Pris. of War Record
Enlistment Papers 1	Resignations

Other papers relating to—

Admission to Hosp'l	Furlough or L. of A.
Casualty Sheet	Med. Examination
Confinement	Misc. Information
Contracts	Pay or Clothing
Death or Effects	Personal Reports
Desertion	Rank
Discharge from Hosp'l	Transfer to Hosp'l
Discharge from Service	Transfer to V. R. C.
Duty	Transportation

DECLARATION OF RECRUIT.

I, William Gale desiring to VOLUNTEER as a Soldier in the *ARMY OF THE UNITED STATES*, for the term of 3 years do declare that I am 23 years and ——— months of age; that I have never been discharged from the United States service on account of disability or by sentence of a court martial, or by order, before the expiration of a term of enlistment; and I know of no impediment to my serving honestly and faithfully as a soldier for 3 years

Given at Providence
The 11th day of Aug 1863

Witness:
E. A. Mackie

his
William Gale
mark

11 U.S.C. 1st Lt.

No. William Gale

Volunteered at Providence

Aug. 11 1863

By Maj. C. Eusley

Regiment of Cav.

enlistment; last served in Company ( )

Reg't of

Discharged 18

Jun 11 1871

CONSENT IN CASE OF MINOR.

I, Do CERTIFY that I am the

of ; that the said

is years of age; and I do hereby freely give

my CONSENT to his volunteering as a SOLDIER in the ARMY OF THE UNITED STATES for the period of

Given at
The day of

Witness:

VOLUNTEER ENLISTMENT.

State of Rhode Island Town of Providence

I, William Gale born in Goshen

in the State of New York aged 23 years, and by occupation

a Farmer DO HEREBY ACKNOWLEDGE to have volunteered this 11th

day of Nov 1863 to serve as a SOLDIER in the ARMY OF THE UNITED STATES OF AMERICA, for the period of three years, unless sooner discharged by proper authority: Do also agree to accept such bounty, pay, rations and clothing, as are, or may be, established, by law for volunteers. And I, William Gale do solemnly swear, that I will bear true faith and allegiance to the *United States of America*, and that I will serve them honestly and faithfully against all their enemies or opposers whomsoever; and that I will observe and obey the orders of the President of the United States, and the orders of the officers appointed over me, according to the Rules and Articles of War.

Sworn and Subscribed to, at Providence
this 11 day of Nov 1863.
BEFORE me Thos C Greene Justice of the Peace

William Gale
his
X
mark

I CERTIFY, ON HONOR, That I have carefully examined the above-named Volunteer, agreeable to the General Regulations of the Army, and that, in my opinion, he is free from all bodily defects and mental infirmity, which would, in any way, disqualify him from performing the duties of a soldier.

Johnson Gardner M.D.

EXAMINING SURGEON.

I CERTIFY, ON HONOR, That I have minutely inspected the Volunteer, William Gale previously to his enlistment, and that he was entirely sober when enlisted; that to the best of my judgment and belief, he is of lawful age; and that, in accepting him as duly qualified to perform the duties of an able-bodied soldier, I have strictly observed the Regulations which govern the recruiting service. This soldier has Black *eyes* Black *hair* African *complexion*, is 5 *feet*, 10½ *inches high*.

14th *Regiment of* Ry Artly *Volunteers*,

RECRUITING OFFICER.

Co. F, 11 U.S.Col'd H. Art'y.

Private Private

CARD NUMBERS.

1	6181536	26	
2	6194291	27	
3	6194448	28	
4	6194592	29	
5	6194736	30	
6	6194877	31	
7	6195016	32	
8	6195151	33	
9	6195289	34	
10	6195423	35	
11	6195554	36	
12	6195684	37	
13	6195815	38	
14	6195941	39	
15	9125330	40	
16		41	
17		42	
18		43	
19		44	
20		45	
21		46	
22		47	
23		48	
24		49	
25		50	

Book Mark:

See also

S-2759168 P.O. Mil

J. B. Dowd Esq

G | 11 H. Art'y. | U.S.C.T.

Esop A Gall

....., Co. H, 11 Reg't U. S. Col'd H. Art'y.

Appears on

Company Descriptive Book

of the organization named above.

DESCRIPTION.

Age 21 years; height 5 feet 8 inches.

Complexion Ben

Eyes Ben ; hair Ben

Where born — Ny

Occupation Laborer

ENLISTMENT.

When Draftee, Oct 30, 1863.

Where Bridgeport, Ct

By whom 4 Dist ; term 3 y'rs.

Remarks:

(383g) Copyist.

G | 11th C.A. | U.S.C.T

Enos A. Gall

Appears with rank of Pvt on

Muster and Descriptive Roll of a Detachment of Drafted Men and Substitutes forwarded

(11th Regt C.S.H.A.)

for the 11 Reg't U. S. Col'd H.A. Roll dated

New Haven Conn, Nov 2, 1863

Where born New York

Age 29 years; occupation Laborer

Drafted and mustered in:

When Oct 30, 1863.

Where Bridgeport Conn 4 Dist,

Period 3 years.

Eyes Blk; hair Blk

Complexion Blk; height 5 ft. 8 in.

Paid bounty and advance pay, $100

Bounty due $100

Where credited

Company to which assigned

Remarks:

Book mark:

Leger

(340) Copyist.

K. | 11 H. Art'y. | U.S.C.T.

Ezra A. Gall

Pri., Co. K, 14 Reg't R. I. Col'd H. Art'y.*

Age 29 years.

Appears on

Company Muster-in Roll

of the organization named above. Roll dated Providence R.I., Nov. 23, 1863.

Muster-in to date Nov. 23, 1863.

Joined for duty and enrolled:

When Oct 30, 1863.

Where

Period 3 years.

Valuation of horse, $ 100

Valuation of horse equipments, $ 100

Remarks: Drafted at Bridgeport Conn. 4th Dist.

* This organization subsequently became Co K, 11 Reg't U. S. Colored Heavy Artillery.

Book mark:

Perry

G | 11 H. Art'y. U.S.C.T.

Esq A. Gall,

Pvt, Co. H, 14 Reg't R. I. Col'd H. Art'y.*

Appears on

Company Muster Roll

for 23 Nov. to 31 Dec, 1863.

Present or absent Present

Stoppage, $.....100 for .....

.....

.....

Due Gov't, $.....100 for .....

.....

Valuation of horse, $.....100

Valuation of horse equipments, $.....100

Remarks: Drafted at Bridgeport Ct. 4th District

.....

.....

.....

.....

.....

*This organization subsequently became Co. H, 11 Reg't U. S. Colored Heavy Artillery.

Book mark: .....

Perry

(358) Copyist.

G. | 11 H. Art'y. | U.S.C.T.

Esop A. Gall

Pvt., Co. H, 14 Reg't R. I. Col'd H. Art'y.*

Appears on

Company Muster Roll

for Jan't Feb, 1864.

Present or absent Present

Stoppage, $ 100 for

Due Gov't, $ 100 for

Valuation of horse, $ 100

Valuation of horse equipments, $ 100

Remarks:

*This organization subsequently became Co. H, 11 Reg't U. S. Colored Heavy Artillery.

Book mark:

(358) Copyist.

C. | 11 H. Art'y. | U.S.C.T.

Corp A. Gall

Pvt, Co. H, 14 Reg't R. I. Col'd H. Art'y.*

Appears on

Company Muster Roll

for Mch. & Apl, 1864

Present or absent Present

Stoppage, $ 100 for

Due Gov't, $ 100 for

Valuation of horse, $ 100

Valuation of horse equipments, $ 100

Remarks:

*This organization subsequently became Co. H. 11 U. S. Col'd H. Art'y

Book mark:

Perry

(358) Copyist.

G | 11 H. Art'y. | **U.S.C.T.**

Corp. A. Gall

Pvt., Co. K, 8 Reg't U. S. Col'd H. Art'y.*

Appears on

Company Muster Roll

for May & June, 1864.

Present or absent Present

Stoppage, $ 100 for

Due Gov't, $ 100 for

Valuation of horse, $ 100

Valuation of horse equipments, $ 100

Remarks: Stop for one Screw driver, wiper, Canteen

† This organization subsequently became Co. K, 11 Reg't U. S. Colored Heavy Artillery.

Book mark:

Perry

(358) *Copyist.*

G | 11 H. Art'y. | U.S.C.T.

Esop A. Gall

Private, Co. H, 11 Reg't U. S. Col'd H. Art'y.

Appears on

Company Muster Roll

for July & Aug., 1864.

Present or absent Present

Stoppage, $ 100 for

Due Gov't, $ 100 for

Valuation of horse, $ 100

Valuation of horse equipments, $ 100

Remarks: Stop for screw driver 2 3. wiper 20 Canteen 41 Haversack 48

Mus Apr. 19, 1865

Book mark:

(358) W. A. Tyler *Copyist.*

G | 11 H. Art'y. | U.S.C.T.

Esop A. Gall

Private, Co. H, 11 Reg't U. S. Col'd H. Art'y.

Appears on

Company Muster Roll

for Dated Oct. 31, 1864.

Present or absent Present

Stoppage, $ 100 for

Due Gov't, $ 100 for

Valuation of horse, $ 100

Valuation of horse equipments, $ 100

Remarks: Stopped for servo
driver + swiper 4.3
Canteen + Hav. 89.
Rec'd Apr. 19, 1864

Book mark:

W A Tyler

(358) *Copyist.*

G | 11 H. Art'y. | U.S.C.T.

Esop G. Gall

Priv't, Co. H, 11 Reg't U. S. Col'd H. Art'y.

Appears on

Company Muster Roll

for Nov. & Dec., 1864.

Present or absent Present

Stoppage, $ 100 for

Due Gov't, $ 100 for

Valuation of horse, $ 100

Valuation of horse equipments, $ 100

Remarks: Stop for wiper & screw driver 43 Canteen & Haversack $1

Book mark:

W A Tyler

(358) *Copyist.*

G | 11 H. Art'y. | U.S.C.T.

Esop A. Gall

Priv't, Co. H, 11 Reg't U. S. Col'd H. Art'y.

Appears on

Company Muster Roll

for Jan & Feb, 1866.

Present or absent Present

Stoppage, $ 100 for

Due Gov't, $ 100 for

Valuation of horse, $ 100

Valuation of horse equipments, $ 100

Remarks: Stop for Hav-
ersack, 67

Book mark:

W. A. Tyler

(358) *Copyist.*

G | 11 H. Art'y. | U.S.C.T.

Ezra A. Gall

Priv't, Co. H, 11 Reg't U. S. Col'd H. Art'y.

Appears on

Company Muster Roll

for March & Apr., 1865.

Present or absent Present

Stoppage, $ 100 for

Due Gov't, $ 100 for

Valuation of horse, $ 100

Valuation of horse equipments, $ 100

Remarks:

Book mark:

W A Taylor

(358) *Copyist.*

G. | 11 H. Art'y. | U.S.C.T.

Esop A Hall

Pt, Co. H, 11 Reg't U. S. Col'd H. Art'y.

Appears on

Company Muster Roll

for Maryand June, 1865.

Present or absent Present

Stoppage, $ 100 for

Due Gov't, $ 100 for

Valuation of horse, $ 100

Valuation of horse equipments, $ 100

Remarks: Mosquito bar 1.00
winter 2.0

Book mark :

Phillis

(358) *Copyist.*

G. | 11 H. Art'y. | U.S.C.T.

Esop A. Gall

Pvt., Co. H, 11 Reg't U. S. Col'd H. Art'y.

Appears on

Company Muster Roll

for July and Aug., 1865.

Present or absent Present

Stoppage, $ 100 for

Due Gov't, $ 100 for

Valuation of horse, $ 100

Valuation of horse equipments, $ 100

Remarks:

Book mark:

R Rhuells

(358) *Copyist.*

G. | 11 H. Art'y. | U.S.C.T.

Esop A. Gall

Pvt., Co. K, 11 Reg't U. S. Col'd H. Art'y.

Appears on **Co. Muster-out Roll,** dated New Orleans La., Oct. 2, 1865.

Muster-out to date Oct. 2, 1865.

Last paid to June 30, 1865.

Clothing account:

Last settled ....., 186 ; drawn since $ 100

Due soldier $ ..... 100 ; due U. S. $ 33 67/100

Am't for cloth'g in kind or money adv'd $ 100

Due U. S. for arms, equipments, &c., $ 100

Bounty paid $ 00 100 ; due $ 100 100

Remarks: Joined ab orig'l org'n. Stop for Musket and accts retained $6.

Book mark :

P Wells

Copyist.

Co. –, 11 U.S.Col'd H.Art'y.

Private

CARD NUMBERS.

1 6181190	26
2	27
3	28
4	29
5	30
6	31
7	32
8	33
9	34
10	35
11	36
12	37
13	38
14	39
15	40
16	41
17	42
18	43
19	44
20	45
21	46
22	47
23	48
24	49
25	50

Book Mark:

See also

G | 11 H. Art'y. | U.S.C.T.

Francis C. Gardiner

Appears with rank of Pvt on

Muster and Descriptive Roll of a Detachment of U. S. Vols. forwarded

for the 11 Reg't H. C. Lt. Arty. Roll dated

Portland Me Jany 25, 1864.

Where born Brunswick Me

Age 20 y'rs; occupation Laborer

When enlisted Jany 25, 186 .

Where enlisted Portland

For what period enlisted 3 years.

Eyes Blk; hair Blk

Complexion Clear; height 5 ft. 4 in.

When mustered in Jany 25, 1864.

Where mustered in

Bounty paid $ 100; due $ 100

Where credited Portland

Company to which assigned

Remarks: 14 R. I. H. Artillery

New recruit

Not taken up on rolls of regt

Book mark:

Record

(339) Copyist.

Gardiner, Francis C

_____. Co. _____, 11 Reg't 11th C. A.

(Philippine Insurrection.) (CIVIL WAR)

2 Inclosures.

Bed Cards	Ex. Preliminary to M. O.
Burial Records	Final Statements
Certs. of Dis. for Discharge	Fines
C. M. Charges	Furloughs or L. of A.
Descriptive Lists /	Med. Certificates
Descriptive and Assignment Cards	Med. Des. Lists
Discharge Certificates	Orders
Enlistment Papers /	Rèsignations

Other papers relating to—

Admission to Hosp'l	Furlough or L. of A.
Confinement	Med. Examination
Contracts	Misc. Information
Death or Effects	Pay or Clothing
Desertion	Personal Reports
Discharge from Hosp'l	Rank
Discharge from Service	Transfer to Hosp'l
Duty	Transportation

DECLARATION OF RECRUIT.

I, Francis C Gardner desiring to VOLUNTEER, as a soldier in the ARMY OF THE UNITED STATES, for the term of THREE YEARS, DO DECLARE, That I am Twenty years and ——— months of age; that I have never been discharged from the United States service on account of disability or by sentence of a court-martial, or by order before the expiration of a term of enlistment: and I know of no impediment to my serving honestly and faithfully as a soldier for three years.

GIVEN at Portland the 25th day of January 1864.

Witness:
Wm Wise Francis C Gardner

No. 2944

Francis C Gardner

Volunteered at Portland on the 25th day of January 1864,

By Capt Chadbourne to serve 1 Yr. or during the War

Into Co. D, 1st Regt. Heavy Artillery Regiment of Augusta

Enlisted as a Private

Re-enlistment; last served in Co. ( )

Regiment of

Discharged 186 .

Oct. 1865. This paper was formerly filed in the Enrolment Div. A. G. O.

CONSENT IN CASE OF MINOR.

I, Do CERTIFY, That I am the of ; that the said is years of age; and I do hereby freely give my CONSENT to his volunteering as a SOLDIER in the ARMY OF THE UNITED STATES for the period of THREE YEARS.

GIVEN at the
day of 186

Witness:

Town of South Berwick

VOLUNTEER ENLISTMENT.

STATE OF Maine TOWN OF Brunswick

I, Francis C Gardner a resident of Brunswick born in Brunswick in the State of Maine aged Twenty years, and by occupation a Laborer Do HEREBY ACKNOWLEDGE to have volunteered this twenty fifth day of January 1864, to serve as a SOLDIER in the ARMY OF THE UNITED STATES OF AMERICA, for the period of THREE YEARS, unless sooner discharged by proper authority: Do also agree to accept such bounty, pay, rations, and clothing, as are, or may be, established by law for volunteers. And I, Francis C Gardner do solemnly swear, that I will bear true faith and allegiance to the UNITED STATES OF AMERICA, and that I will serve them honestly and faithfully against all their enemies or opposers whomsoever; and that I will observe and obey the orders of the President of the United States, and the orders of the officers appointed over me, according to the Rules and Articles of War.

Sworn and subscribed to at Portland this 25th day of January 1864. } Francis C Gardner

BEFORE Charles H Doughty Capt & Pro. Mar. Mustering Officer

I CERTIFY, ON HONOR, That I have carefully examined the above named Volunteer, agreeably to the General Regulations of the Army, and that in my opinion he is free from all bodily defects and mental infirmity, which would, in any way, disqualify him from performing the duties of a soldier.

Geo N Jewell *Examining Surgeon.*

I CERTIFY, ON HONOR, That I have minutely inspected the Volunteer, Francis C Gardner previously to his enlistment, and that he was entirely sober when enlisted; that, to the best of my judgment and belief, he is of lawful age; and that, in accepting him as duly qualified to perform the duties of an able-bodied soldier, I have strictly observed the Regulations which govern the recruiting service. This soldier has dark EYES, dark HAIR, dark COMPLEXION, is 5 FEET 4 INCHES high.

14th REGIMENT OF R. I. Heavy Artillery VOLUNTEERS,

Charles H Doughty *Recruiting Officer.*
Capt & Pro. Mar.

NOTE.—The Recruiting Officer will here enter the soldier's residence, and state whether * married or single.

This soldier is a resident of Brunswick and is * Single

Received at Portland Maine

the within named recruits, this 26th

day of January, 1864.

H. D. A. Powley

Brig. Gen'l Commanding General Rendezvous.

Francis C. Gardiner

14 R. I. Art'y.

May 1880 This paper was formerly
filed [illegible] Draft
Rendezvous at Portland [illegible] the
Enrollment Dist. Me. &c., &c

[Form B.]

ROLL OF VOLUNTEERS Enlisted in the First District, State of Maine

Portland, January 25, 1864

NO.	NAME OF RECRUIT.	DESIGNATION.	REGIMENT SELECTED.	BY WHOM PRESENTED.	REMARKS.
1	Francis C. Gardner (Col'd)	New Recruit	14th R. I. Artillery	William Hussey	

NOTE.—In column headed "Designation," the word "veteran," or "new recruit," as the case may be, will be entered opposite the name of the recruit.

To John W. T. Gardiner Maj. U.S.A
ACTING ASSISTANT PROVOST MARSHAL GENERAL.

Charles H Doughty
CAPTAIN AND PROVOST MARSHAL.

Co. K, 11 U.S.Col'd H.Art'y.

Corporal	Corporal

CARD NUMBERS.

1 6182153	26
1 6182297	27
1 6182445	28
1 6182590	29
1 6182729	30
1 6182983	31
1 6183784	32
1 9123966	33
1 9123814	34
10	35
11	36
12	37
13	38
14	39
15	40
16	41
17	42
18	43
19	44
20	45
21	46
22	47
23	48
24	49
25	50

Book Mark:

See also

G | 11 H. Art'y. | U.S.C.T.

Benjamin O. Gardner

, Co. A, 11 Reg't U. S. Col'd H. Art'y.

Appears on

Company Descriptive Book

of the organization named above.

DESCRIPTION.

Age 28 years; height 5 feet 6 3/4 inches.

Complexion Dk Mulatto

Eyes Dk Hazel; hair Blk

Where born Kingston R. I.

Occupation Farmer

ENLISTMENT.

When May 6, 1863.

Where Providence

By whom W H Helm; term 3 y'rs.

Remarks: Aft mustd out Aug 28/63. Mustd Aug 22/64 at Fort Jackson La: Invoicing & final statements Rend Aug 23/64

James

(383y) Copyist.

G | 11 H. Art'y. | U.S.C.T.

Benjamin O. Gardner

, Co A, 11 Reg't U. S. Col'd H. Art'y.

Appears on

Company Descriptive Book

of the organization named above.

DESCRIPTION.

Age 25 years; height 5 feet 6 3/4 inches.

Complexion Dk mulatto

Eyes Dk Hazel; hair Blk

Where born North Kingston R I

Occupation Farmer

ENLISTMENT.

When Aug 6, 1863.

Where Providence

By whom W H Helme; term 3 y'rs.

Remarks: absented camp Aug 28.63. rec'd Aug 22.64 at Fort Jackson La with the Typhoid Malaria fever. Final Statements & Inventory rec'd. Aug. 23. 64. Effects. 1 wool blanket 1 pr. shoes.

James

(3535)

Coppist.

G | 11 H. Art'y. | U.S.C.T.

Benjamin C. Gardner

Corpl, Co. A, 14 Reg't R. I. Col'd H. Art'y.*

Age 28 years.

Appears on

Company Muster-in Roll

of the organization named above. Roll dated Camp Smith near Providence R.I., Aug 28, 1863.

Muster-in to date Aug 28, 1863.

Joined for duty and enrolled:

When Aug. 6, 1863.

Where Providence

Period 3 years.

Valuation of horse, $100

Valuation of horse equipments, $100

Remarks: 1st District

* This organization subsequently became Co. A, 11 Reg't U. S. Colored Heavy Artillery.

Book mark:

Prewitt

(356) Copyist.

G | 11 H. Art'y. | U.S.C.T.

Benjamin C. Gardner

Corpl, Co. A, 14 Reg't R. I. Col'd H. Art'y.*

Appears on

Company Muster Roll

for Aug 28 to Dec 31, 1863.

Present or absent Present

Stoppage, $ 100 for

Due Gov't, $ 100 for

Valuation of horse, $ 100

Valuation of horse equipments, $ 100

Remarks: Appointed Corpl.
Aug 28, 1863

*This organization subsequently became Co. A, 11 Reg't U. S. Colored Heavy Artillery.

Book mark:

Prewitt

(358) Copyist.

G | 11 H. Art'y. | U.S.C.T.

Benjamin C. Gardner

Corpl, Co. A, 14 Reg't R. I. Col'd H. Art'y.*

Appears on

Company Muster Roll

for Jan & Feb, 1864.

Present or absent Present

Stoppage, $ 100 for

Due Gov't, $ 100 for

Valuation of horse, $ 100

Valuation of horse equipments, $ 100

Remarks: Promoted to be Corpl.
Aug. 28. 63

*This organization subsequently became Co. A, 11 Reg't U. S. Colored Heavy Artillery.

Book mark:

Prewitt
Copyist.

G | 11 H. Art'y. | U.S.C.T.

Benjamin C. Gardner

Corpl, Co. A, 14 Reg't R. I. Col'd H. Art'y.*

Appears on

Company Muster Roll

for Mch & Apl, 1864.

Present or absent Present

Stoppage, $ 100 for

Due Gov't, $ 100 for

Valuation of horse, $ 100

Valuation of horse equipments, $ 100

Remarks: 3 Mo. pay stopped G. O. No. 28. Apl. 5. 1864.

*This organization subsequently became Co. A, 11 Reg't U. S. Colored Heavy Artillery.

Book mark:

Prewitt

Copyist.

(A) 11 H. Art'y. U.S.C.T.

Pvt. C. Gardner

Co. L, 8 Reg't U. S. Col'd H. Art'y.*

Appears on

Company Muster Roll

for May & June, 1864.

Present or absent Present

Stoppage, $ ..... 100 for .....

.....

Due Gov't, $ ..... 100 for .....

Valuation of horse, $ 100

Valuation of horse equipments, $ 100

Remarks: Will pay stoppage for three months. G. O. No. 28, S. C. Dn. Apr. 5, 1864

† This organization subsequently became Co. A, 11 Reg't U. S. Colored Heavy Artillery.

Book mark: .....

Prewitt

Copyist.

G. | 11 H. Art'y. | U.S.C.T.

Benj. L. Gardner

Capt., Co. A, 11 Reg't U. S. Col'd H. Art'y.

Appears on

Company Muster Roll

for July & Aug., 1864.

Present or absent.....

Stoppage, $.....100 for .....

.....

.....

Due Gov't, $.....100 for .....

.....

Valuation of horse, $.....100

Valuation of horse equipments, $.....100

Remarks: Deceased
Died Fort Jackson La.
Aug. 22d 1864
Inventory and Final State-
ments rec'd Aug. 22/64

.....

.....

.....

.....

Book mark: No 7581 Feb. 23d 1865

B. Fisher

Copyist.

G. | 11 H. Art'y. | U.S.C.T.

Benjamin C. Gardner,

Corpl., Co. A, 11 Reg't U. S. Col'd H. Art'y.

Appears on **Co. Muster-out Roll,** dated

New Orleans, La., Oct. 2, 1865.

Muster-out to date ....., 186 .

Last paid to ....., 186 .

Clothing account:

Last settled....., 186 ; drawn since $..... 100

Due soldier $..... 100 ; due U. S. $..... 100

Am't for cloth'g in kind or money adv'd $..... 100

Due U. S. for arms, equipments, &c., $ 100

Bounty paid $..... 100 ; due $..... 100

Remarks: Joined Regt. Augn.

Private to Aug., 28/63.

Died Ft. Jackson, La.,

Aug. 23/64. Smoty. and Final

Statement rend'd Aug. 23/64.

Book mark: 75.812 A. B. V.

R M Brammer

(361) *Copyist.*

Gardner Benjamin 6.

P, Co. , 11 Reg't Mass Cav

2 Enclosures.

Bed Cards	Final Statements 2
Burial Records	Furloughs or L. of A.
Certs. of Dis. for Discharge	Med. Certificates
C. M. Charges	Med. Des. Lists
Descriptive Lists	Orders
Discharge Certificates	Pris. of War Record
Enlistment Papers 1	Resignations

Other papers relating to—

Admission to Hosp'l	Furlough or L. of A.
Casualty Sheet	Med. Examination
Confinement 1	Misc. Information
Contracts	Pay or Clothing
Death or Effects 1	Personal Reports
Desertion	Rank
Discharge from Hosp'l	Transfer to Hosp'l
Discharge from Service	Transfer to V. R. C.
Duty	Transportation

DECLARATION OF RECRUIT.

I, Benjamin C Gardner desiring to VOLUNTEER as a Soldier in the *ARMY OF THE UNITED STATES*, for the term of three years, do declare that I am 28 years and 3 months of age; that I have never been discharged from the United States service on account of disability or by sentence of a court martial, or by order, before the expiration of a term of enlistment; and I know of no impediment to my serving honestly and faithfully as a soldier for the First-Lieut. Com. Heavy Artillery.

Given at Providence

The 4th day of August 1863.

Witness: Fred. B. Waugh.

B C Gardner

11 U S C, 174

No. 1

Benjamin C. Gardner

Volunteered at

By

Regiment of

enlistment; last served in Company ( )

Reg't of

Discharged 18

RECEIVED
JUL 11 1871
ADJ. GEN'S OFFICE

CONSENT IN CASE OF MINOR.

I, Do CERTIFY that I am the of ; that the said is years of age; and I do hereby freely give my CONSENT to his volunteering as a SOLDIER in the ARMY OF THE UNITED STATES for the period of

Given at

The day of

Witness:

VOLUNTEER ENLISTMENT.

State of Rhode Island

Town of North Kingstown

I, Benjamin C Gardiner born in North Kingstown in the State of Rhode Island aged 28 years, and by occupation a Manufacturer DO HEREBY ACKNOWLEDGE to have volunteered this 6th day of August 1863, to serve as a SOLDIER in the ARMY OF THE UNITED STATES of AMERICA, for the period of three years, unless sooner discharged by proper authority: Do also agree to accept such bounty, pay, rations and clothing, as are, or may be, established by law for volunteers. And I, Benjm C Gardiner do solemnly swear, that I will bear true faith and allegiance to the *United States of America*, and that I will serve them honestly and faithfully against all their enemies or opposers whomsoever; and that I will observe and obey the orders of the President of the United States, and the orders of the officers appointed over me, according to the Rules and Articles of War.

Sworn and subscribed to, at Providence
this 7 day of August 1863.
BEFORE me Wm Sanford Clerk of the Rec

Benj C Gardiner

I CERTIFY, ON HONOR, That I have carefully examined the above-named Volunteer, agreeably to the General Regulations of the Army, and that, in my opinion, he is free from all bodily defects and mental infirmity, which would, in any way, disqualify him from performing the duties of a soldier.

Solomon Gardner MD

EXAMINING SURGEON.

I CERTIFY, ON HONOR, That I have minutely inspected the Volunteer, Benjm C Gardiner previously to his enlistment, and that he was entirely sober when enlisted; that, to the best of my judgment and belief, he is of lawful age; and that, in accepting him as duly qualified to perform the duties of an able-bodied soldier, I have strictly observed the Regulations which govern the recruiting service. This soldier has black *eyes*, black *hair*, Sprue *complexion*, is 5 *feet*, 6 3/4 *inches high*.

First-colored company Heavy Artillery
Regiment Rhode Island *Volunteers*,

Wm. H. Helme

RECRUITING OFFICER.

8

3422 1864

FINAL STATEMENT

OF

Benjamin C. Gardner

Eighth Reg't of U. S. Vet. Artillery

VOLUNTEERS.

NOTE 1.—*Two* of these certificates (or duplicates) are to be given to each Volunteer Soldier or drafted man who may be discharged previously to the discharge of his company, that he may at once receive from the Paymaster the pay, &c., due him, and the captain or other COMMISSIONED officer commanding the company will certify to the act of the delivery of the duplicate certificates; on these certificates the Soldier is "entitled to" his *discharge*, and should also present his discharge to the Paymaster to have the payment endorsed on it. The discharge is to be given back to the Soldier by the Paymaster; the latter only retaining as his voucher the duplicate certificates.

NOTE 2.—If the Soldier is entitled to pay for the use of his horse, the Company Commander will certify to that fact on the back of both these final statements, and also to the time he has pay due for having been so mounted on his own horse.

NOTE 3.—When a Soldier is furnished with final statements, his descriptive list, if he has one, should be taken up by the officer who gives the Soldier these statements, and endorsed with a statement to this effect by the officer. This endorsement should exhibit a full statement of the time for which the Soldier was allowed pay on his final statements, the clothing account, and all other charges against him or in his favor, so as to comprise a complete exhibit of his account. It will then be transmitted to the company commander of the Soldier, who will enter all the data necessary to a full understanding of the Soldier's account on the muster roll upon which the Soldier's discharge is reported. The descriptive list will then be destroyed. The object of this is, that the remaining portion of the Soldier's account may be settled upon the receipt of these muster rolls, and the Soldier receive any pay or allowances that may be due him at the time of his discharge, and which may not appear on his final statements from the fact that his descriptive list is incomplete. These accounts for back pay, &c., are settled by the 2d Auditor of the Treasury Department.

NOTE 4.—Charges for loss or injury to ordnance, horse equipments, and other miscellaneous charges, should appear under the heading of "Other Stoppages."

NOTE 5.—Bounty paid by State authorities, and not by the United States, will not be entered on this statement.

NOTE 6.—Amounts due the Sutler and Laundress must be entered on the muster roll on which the discharge, death, desertion, &c., is reported, as well as on the final statement, otherwise the amount cannot be collected from the United States.

NOTE 7.—This blank will be used for deceased volunteers and drafted men, as well as for others.

NOTE 8.—Where a Soldier dies in Hospital or on detached service, his descriptive list, if he has one, should be sent with his final statements, in duplicate, to the Second Auditor, Washington, D. C.

RECEIVED ADJUTANT GEN'S OFFICE
JUL 6 1871

1864

I certify, on honor, that Benjamin L. Gardner a Corporal of Captain Capt. Thomas W. Ty's Company (A) of the Eighth Regiment of U.S. Vet. Artly (Colrd) VOLUNTEERS, of the State of Rhode Island, born in North Kingston, State of Rhode Island, aged 28 years; 5 feet 6¼ inches high, dk Mulatto complexion, dk Hazle eyes, Black hair, and by occupation a Farmer, having joined the company on its original organization at Providence R. I., and enrolled in it at the muster into the service of the United States at Providence R.I., on the 28th day of August, 1863, (~~or was mustered in service as a recruit~~ by William Silvey Capt. 1st U.S. Artly, at Providence R.I. on the 28th day of August, 1863, ~~or was drafted and mustered into the service of the United States from the Enrollment District of the State of~~, ~~at~~ ~~on the day of~~, ~~186~~,) to serve in the Regiment, for the term of Three Years: and having served HONESTLY and FAITHFULLY with his Company in 8th U.S.A. Vet Artly (Colrd) to the present date, is now entitled to a DISCHARGE by reason of Death of Typhoid Malaria fever

The said Benjamin L. Gardner was last paid by Paymaster ~~to include the day of~~, ~~186~~, and has pay due him from that time to the present date; he is entitled to pay and subsistence for TRAVELING to place of enrollment, and whatever other allowances are authorized to volunteer soldiers, drafted men, or militia, so discharged. He has received from the United States CLOTHING amounting to Sixty Three 10/100 dollars, since the Sixth day of August, 1863, when his clothing account was last settled. He has received from the United States ——— 100 dollars advanced BOUNTY.

There is to be stopped from him, on account of the State of ———, or other authorities, for CLOTHING, &c, received on entering service, ——— 100 dollars; and for other stoppages, viz: ———

——— 100 dollars.

He has been furnished with TRANSPORTATION in kind from the place of his discharge to ———; and he has been SUBSISTED for TRAVELING to his place of enrollment, up to the ———, 186 .

~~He is indebted to ———, SUTLER, ——— 100 dollars.~~

~~He is indebted to ———, LAUNDRESS, ——— 100 dollars.~~

Given in Duplicate, at Fort Jackson La. , this 25th day of August, 1864.

Thos W Gay
Capt

Commanding Company G

[A. G. O. No. 95—First.]

V

FINAL STATEMENT

OF

Benjamin C. Gardner

Co. 4th Reg't of N. H. Art'y for 12 M/

1126

VOLUNTEERS.

Acc'd Reg 22 1864

NOTE 1.—*Two* of these certificates (or duplicates) are to be given to each Volunteer Soldier or drafted man who may be discharged previously to the discharge of his company, that he may at once receive from the Paymaster the pay, &c., due him, and the captain or other COMMISSIONED officer commanding the company will certify to the act of the delivery of the duplicate certificates; on these certificates the Soldier is "entitled to" his *discharge*, and should also present his discharge to the Paymaster to have the payment endorsed on it. The discharge is to be given back to the Soldier by the Paymaster; the latter only retaining as his voucher the duplicate certificates.

NOTE 2.—If the Soldier is entitled to pay for the use of his horse, the Company Commander will certify to that fact on the back of both these final statements, and also to the time he has pay due for having been so mounted on his own horse.

NOTE 3.—When a Soldier is furnished with final statements, his descriptive list, if he has one, should be taken up by the officer who gives the Soldier these statements, and endorsed with a statement to this effect by the officer. This endorsement should exhibit a full statement of the time for which the Soldier was allowed pay on his final statements, the clothing account, and all other charges against him or in his favor, so as to comprise a complete exhibit of his account. It will then be transmitted to the company commander of the Soldier, who will enter all the data necessary to a full understanding of the Soldier's account on the muster roll upon which the Soldier's discharge is reported. The descriptive list will then be destroyed. The object of this is, that the remaining portion of the Soldier's account may be settled upon the receipt of these muster rolls, and the Soldier receive any pay or allowances that may be due him at the time of his discharge, and which may not appear on his final statements from the fact that his descriptive list is incomplete. These accounts for back pay, &c., are settled by the 2d Auditor of the Treasury Department.

NOTE 4.—Charges for loss or injury to ordnance, horse equipments, and other miscellaneous charges, should appear under the heading of "Other Stoppages."

NOTE 5.—Bounty paid by State authorities, and not by the United States, will not be entered on this statement.

NOTE 6.—Amounts due the Sutler and Laundress must be entered on the muster roll on which the discharge, death, desertion, &c., is reported, as well as on the final statement, otherwise the amount cannot be collected from the United States.

NOTE 7.—This blank will be used for deceased volunteers and drafted men, as well as for others.

NOTE 8.—Where a Soldier dies in Hospital or on detached service, his descriptive list, if he has one, should be sent with his final statements, in duplicate, to the Second Auditor, Washington, D. C.

ADJUTANT GENERAL'S OFFICE.
Sept 6th 1864
Duplicate with Inventory sent 2d Auditor.

RECEIVED
SEP 6 1864
ADJUTANT GEN'LS OFF.

I certify, on honor, that Benjamin C. Gardner a Corporal of Captain Thomas W. Tizz's Company (A) of the Eight Regiment of U.S.H. Artly (Colrd) VOLUNTEERS, of the State of Rhode Island, born in North Kingston, State of Rhode Island, aged 28 years; 5 feet 6¾ inches high, Dk Mulatto complexion, Dk Hazle eyes, Black hair, and by occupation a Farmer, having joined the company on its original organization at Providence R.I., and enrolled in it at the muster into the service of the United States at Providence R. I., on the Twenty Eighth day of August, 1863, (~~or was mustered in service as a recruit~~, by William Silvey Capt. 1st R.I. Art'y, at Providence RI., on the 28th day of August, 186 3 or ~~was drafted and mustered into the service of the United States from the Enrollment District of the State of~~ , ~~at~~ , on the ~~day of~~ , ~~186~~ ,) to serve in the Regiment, for the term of Three Years: and having served HONESTLY and FAITHFULLY with his Company in 1st R.I. H. Art'y Co. H to the present date, is now entitled to a DISCHARGE by reason of Death of (Chro Malaria (Lod Augt 22 1864 at Culpeper)).

The said Benjamin C. Gardner never was ~~last~~ paid by Paymaster to ~~include the day of~~ , ~~186~~ , and has pay due him from that time to the present date; he is entitled to pay and subsistence for TRAVELING to place of enrollment, and whatever other allowances are authorized to volunteer soldiers, drafted men, or militia, so discharged. He has received from the United States CLOTHING amounting to Sixty Three 70/100 dollars, since the Sixth day of August, 186 3, when his clothing account was last settled. He has received from the United States ——— 100 dollars advanced BOUNTY.

There is to be stopped from him, on account of the State of , or other authorities, for CLOTHING, &c , received on entering service. ——— 100 dollars; and for other stoppages, viz:

——— 100 dollars.

He has been furnished with TRANSPORTATION in kind from the place of his discharge to ; and he has been SUBSISTED for TRAVELING to his place of enrollment, up to the , 186 .

~~He is indebted to , CUTLER, 100 dollars.~~

~~He is indebted to , LAUNDRESS, 100 dollars.~~

Given in Duplicate, at Port Jackson La., this 23d day of August, 1864.

Thos W Tizz
Capt
Commanding Company A

[A. G. O. No. 95—First.]

ARTICLES OF WAR.

ART. 95. When any non-commissioned officer or soldier shall die, or be killed in the service of the United States, the then commanding officer of the troop or company shall, in the presence of two other commissioned officers, take an account of what effects he died possessed of, above his arms and accoutrements, and transmit the same to the office of the Department of War, which said effects are to be accounted for, and paid to the representatives of such deceased non-commissioned officer or soldier. And in case any of the officers, so authorized to take care of the effects of deceased officers and soldiers, should, before they have accounted to their representatives for the same, have occasion to leave the regiment or post, by preferment or otherwise, they shall, before they be permitted to quit the same, deposit in the hands of the commanding officer, or of the assistant military agent, all the effects of such deceased non-commissioned officers and soldiers, in order that the same may be secured for, and paid to, their respective representatives.

ARMY REGULATIONS—EDITION OF 1861.

DECEASED SOLDIERS.

Par. 152. Inventories of the effects of deceased non-commissioned officers and soldiers, required by the 95th Article of War, will be forwarded to the Adjutant General, by the commander of the company to which the deceased belonged, and a duplicate of the same to the colonel of the regiment. Final statements of pay, clothing, &c., will be sent with the inventories. When a soldier dies at a post or station absent from his company, it will be the duty of his immediate commander to furnish the required inventory, and, at the same time, to forward to the commanding officer of the company to which the soldier belonged, a report of his death, specifying the date, place, and cause; to what time he was last paid, and the money or other effects in his possession at the time of his decease; which report will be noted on the next muster roll of the company to which the man belonged. Each inventory will be endorsed, "Inventory of the effects of ——— ———, late of company (—) ——— regiment of ———, who died at ———, the——— day of ———, 186–." If a legal representative receive the effects, it will be stated in the report. If the soldier leave no effects, the fact will be reported.

Par. 153. Should the effects of a deceased non-commissioned officer or soldier not be administered upon within a short period after his decease, they shall be disposed of by a Council of Administration, under the authority of the commanding officer of the post, and the proceeds deposited with the Paymaster, to the credit of the United States, until they shall be claimed by the legal representatives of the deceased.

Par. 154. In all such cases of sales by the Council of Administration, a statement in detail, or account of the proceeds, duly certified by the Council and commanding officer, accompanied by the Paymaster's receipt for the proceeds, will be forwarded by the commanding officer to the Adjutant General. The statement will be endorsed, "Report of the proceeds of the effects of ——— ———, late of company (—) ——— regiment of ———, who died at ———, the —— day of ———, 186–."

NOTE 1.—The effects in all cases, when called for, should be turned over to the legal representative, without further authority from the Adjutant General. When the effects are turned over to the relatives of the deceased before these inventories are sent to the Adjutant General, their receipts therefor should be attached to the inventories. In all other cases, one copy will be sent with a letter of transmittal direct to the Adjutant General, and a duplicate retained by the officer.

NOTE 2.—Particular care should be taken to take receipts in duplicate from the Paymaster for any funds turned over to him; one copy should be sent direct to the Adjutant General and one retained by the officer.

INVENTORY OF THE EFFECTS

OF

Benjamin C. Gardner

Late of Company A.

6th Reg't of N. J. M. Artly (6 mos)

Volunteers, who died at Fort Jackson La.

on the 22nd *day of* August 1864.

RECEIVED ... LIST ... Jan

Inventory of the effects of Benjamin C. Gardner late a Corporal of Captain Thomas W. Fry's Company A of the Eighth Regiment of R. I. H. Arty (Colrd) Volunteers, who was enrolled as a Private at Providence in the State of Rhode Island on the Sixth day of August 1863, and mustered into the service of the United States as a Private on the 28th day of August 1863, at Providence R.I. in Company A, Eighth Regiment of R.I. H. Arty (Colrd) Volunteers, to serve Three years or during the war; he was born in North Kingston in the State of Rhode Island; he was 28 years of age, 5 feet 6 3/4 inches high, Dk Mulatto complexion, Dk Hazle eyes, Black hair, and by occupation, when enrolled, a Farmer; he died in Hospital, at Fort Jackson La. on the 22nd day of August 1864, by reason of Typho Malarial Fever

INVENTORY.

Articles.	No.	Articles.	No.	Articles.	No.
Hats		Pairs trowsers		Knapsacks	
Caps		Pairs flannel drawers			
Forage caps		Pairs cotton drawers			
Great coats		Flannel shirts			
Uniform coats		Cotton shirts			
Uniform jackets		Pairs boots			
Flannel sack coats		Pairs shoes	1		
Blouses		Pairs socks			
Stable frocks		Blanket ~~1 Wool~~	1		
Fatigue overalls		Haversacks			

Money.		
	Specie	$
	Notes	$

I CERTIFY, ON HONOR, that the above inventory comprises all the effects of Corporal Benjamin C. Gardner, deceased, and that the effects are in the hands of Captain Thomas W. Fry at Fort Jackson La. to be disposed of by a Council of Administration.

(DUPLICATES.)

Thos W Fry
Capt

Commanding the Company.

STATION: Fort Jackson La

DATE: August 23d 1864

[A. G. O. No. 104.]

Dr Ellerbrook

Bryan in Co Yardley

Co A 11 U.S.C. Hvy Artly

Adjutant General's Office,

COLORED TROOPS BRANCH,

January 7th, 1875

Vol. C. T., 187

Wanted in case of 1st Lieut. & Gardner Engr, Co. "A",
11th Reg't U.S.C. Heavy Artly

Copy of S.O. No. 28

Muster Roll for March & April for
absent from Present with remark "3 months hard labor & forfeited
G.O. No. 23 April 5 1864"

Respectfully,

Wm. Ellenbrook.

W. A. Woodward
Chief Clerk.
Wm. H. Haller

Adjutant General's Office,

Division of Records & Pensions.

January 15th, 1875.

Vol. C. T., 187

Reply in case of Brig. O. Gardner, Co. "A",
11th Reg't U.S.C.H. Artly.

G.O. No 28. Hdqrs 1st Div 13th A.C. April 5. 1864. Charge—
Conduct prejudicial to good order and military discipline—
Finding— Guilty— Sentence— "x x x x to be reduced to the
ranks and confined at hard labor at such place or places
as may be designated by the proper authority, for the term
of three months, and to forfeit all pay proper during that
time"— Approved— So much as relates to imprisonment
is remitted— Tried as of Co. "A" 14th R.I. Hy Artly—

B.A.K.

66th, 11 U.S.Col'd H.Artly.

Enlisted	Died

CARD NUMBERS.

1	6182204	26	
2	6182350	27	
3	6182502	28	
4	6182843	29	
5	6182780	30	
6	6182911	31	
7	6183048	32	
8	6183174	33	
9	6183286	34	
10	6183395	35	
11	6183503	36	
12	6183609	37	
13	6183716	38	
14	9123813	39	
15	9123965	40	
16		41	
17		42	
18		43	
19		44	
20		45	
21		46	
22		47	
23		48	
24		49	
25		50	

Book Mark:

See also

8.1693963 Pomm

J B Dowd
Esq

G | 11 H. Art'y. | U.S.C.T.

Benjamin G. Gardner

, Co. A, 11 Reg't U. S. Col'd H. Art'y.

Appears on

Company Descriptive Book

of the organization named above.

DESCRIPTION.

Age 36 years; height 5 feet 10 inches.

Complexion Afrecan

Eyes Blk; hair Blk

Where born Se Kingston R. I.

Occupation Manufacturer

ENLISTMENT.

When Aug 14, 1863.

Where Providence

By whom W H Helm; term 3 y'rs.

Remarks:

(3536) *Copyist.*

G | 11 H. Art'y. | U.S.C.T.

Benjamin G. Gardner

, Co. A, 11 Reg't U. S. Col'd H. Art'y.

Appears on

Company Descriptive Book

of the organization named above.

DESCRIPTION.

Age 36 years; height 5 feet 10 inches.

Complexion African

Eyes Blk; hair Blk

Where born South Kingston R. I.

Occupation Manufacturer

ENLISTMENT.

When Aug 14, 1863.

Where Providence

By whom W. H. Helme; term 3 y'rs.

Remarks:

Jacob

(383)

Copyist.

G | 11 H. Art'y. | U.S.C.T.

Benjamin G. Gardner

Pvt., Co. A, 14 Reg't R. I. Col'd H. Art'y.*

Age 36 years.

Appears on

Company Muster-in Roll

of the organization named above. Roll dated Camp Smith near Providence R. I., Aug 28, 1863.

Muster-in to date Aug 28, 1863.

Joined for duty and enrolled:

When July 14, 1863.

Where Providence

Period 3 years.

Valuation of horse, $ 100

Valuation of horse equipments, $ 100

Remarks: 2nd District

* This organization subsequently became Co. A, 11 Reg't U. S. Colored Heavy Artillery.

Book mark:

Prewitt

Copyist.

G | 11 H. Art'y. | U.S.C.T.

Benjamin G Gardner

Pvt, Co. A, 14 Reg't R. I. Col'd H. Art'y.*

Appears on

Company Muster Roll

for Aug 28 to Dec 31, 1863.

Present or absent Present

Stoppage, $ ---- 100 for ----

Due Gov't, $ ---- 100 for ----

Valuation of horse, $ ---- 100

Valuation of horse equipments, $ ---- 100

Remarks: ----

*This organization subsequently became Co. A, 11 Reg't U. S. Colored Heavy Artillery.

Book mark: ----

Prewitt

(358) Copyist.

G | 11 H. Art'y. | U.S.C.T.

Benjamin G. Gardner

Pvt., Co. A, 14 Reg't R. I. Col'd H. Art'y.*

Appears on

Company Muster Roll

for Jan & Feb, 1864.

Present or absent Present

Stoppage, $ 100 for

Due Gov't, $ 100 for

Valuation of horse, $ 100

Valuation of horse equipments, $ 100

Remarks:

*This organization subsequently became Co. A, 11 Reg't U. S. Colored Heavy Artillery.

Book mark:

Prewitt

(358) Copyist.

G | 11 H. Art'y. | U.S.C.T.

Benjamin G. Gardner

Pvt., Co. A, 14 Reg't R. I. Col'd H. Art'y.*

Appears on

Company Muster Roll

for Mch & Apl, 1864.

Present or absent Present

Stoppage, $ ..... 100 for .....

Due Gov't, $ ..... 100 for .....

Valuation of horse, $ 100

Valuation of horse equipments, $ 100

Remarks: 3 mo pay stopped G. O. No. 36, Apl. 9, 64

* This organization subsequently became Co. A, 11 Reg't U. S. Colored Heavy Artillery.

Book mark: .....

P Newitt

Copyist.

C | **11 H. Art'y.** | **U.S.C.T.**

Benj. G. Gardner

Pvt., Co. C, 8 Reg't U. S. Col'd H. Art'y.*

Appears on

Company Muster Roll

for May & June, 1864.

Present or absent Present

Stoppage, $ ..... 100 for .....

Due Gov't, $ ..... 100 for .....

Valuation of horse, $ 100

Valuation of horse equipments, $ 100

Remarks: 3 months pay stopped G. O. No 30 Hdq. A. G. 64.

† This organization subsequently became Co. C, 11 Reg't U. S. Colored Heavy Artillery.

Book mark: .....

Prewitt

Copyist.

G. | 11 H. Art'y. | U.S.C.T.

Benj. F. Gardner

Pvt., Co. A, 11 Reg't U. S. Col'd H. Art'y.

Appears on

Company Muster Roll

for July & Aug., 1864.

Present or absent Absent

Stoppage, $.....100 for .....

.....

Due Gov't, $.....100 for .....

.....

Valuation of horse, $.....100

Valuation of horse equipments, $.....100

Remarks: Left at camp Parapet La. July 3/64 Sick in Reg. Hospital. Bmo Roy Cooper H.Q. Ars 13 A.C. G.O. No. 30 April 9/64 Born April 19, 1861

.....

.....

Book mark: .....

B. F. Gardner

(358) Copyist.

Co. | 11 H. Art'y. | U.S.C.T.

Benj. C. Garamon

R., Co. A, 11 Reg't U. S. Col'd H. Art'y.

Appears on

Company Muster Roll

for Sept. & Oct., 1864.

Present or absent Present

Stoppage, $ 100 for

Due Gov't, $ 100 for

Valuation of horse, $ 100

Valuation of horse equipments, $ 100

Remarks:

Book mark:

(358)

Copyist.

G. | 11 H. Art'y. | U.S.C.T.

Benj. G. Gardner

Pvt., Co. A, 11 Reg't U. S. Col'd H. Art'y.

Appears on

Company Muster Roll

for Nov. & Dec., 1864.

Present or absent Present

Stoppage, $ 3 50/100 for C. & G. B.

Due Gov't, $ 100 for

Valuation of horse, $ 100

Valuation of horse equipments, $ 100

Remarks:

Book mark:

(358) Copyist.

D. | **11 H. Art'y.** | **U.S.C.T.**

Benjamin D. Gardner

R.S., Co. A, 11 Reg't U. S. Col'd H. Art'y.

Appears on

Company Muster Roll

for Jan. & Feb., 1865.

Present or absent Present

Stoppage, $ 3 69/100 for Advance

$3.50 " C. & G. C.

Due Gov't, $ 100 for

Valuation of horse, $ 100

Valuation of horse equipments, $ 100

Remarks: Pay stopped

S. O. No. 30 N.D. Gas.

13 A.C. April 9" 1864.

Hires April 19" 1861

Book mark:

R. Tilak

Copyist.

Co. F | 11 H. Art'y. | U.S.C.T.

Benjamin G. Sanders

R. L., Co. A, 11 Reg't U. S. Col'd H. Art'y.

Appears on

Company Muster Roll

for Mar. & Apr., 1865.

Present or absent Present

Stoppage, $3 69/100 for Rations

& 3.50 " Q. & Q. M.

Due Gov't, $ 100 for

Valuation of horse, $ 100

Valuation of horse equipments, $ 100

Remarks: Rec'd April 19 61

Rec'd pay stopped Ord. Dep.

13 A.C. G.O. No. 30 April 9/64

Book mark:

(358) Copyist.

G. | 11 H. Art'y. | U.S.C.T.

Benjamin G. Gardner,

Priv., Co. A, 11 Reg't U. S. Col'd H. Art'y.

Appears on

Company Muster Roll

for May and June, 1865.

Present or absent Present.

Stoppage, $ ---- 100 for ----

Due Gov't, $ ---- 100 for ----

Valuation of horse, $ ---- 100

Valuation of horse equipments, $ ---- 100

Remarks:

Book mark:

R. A. Brainerd

Copyist.

G. | 11 H. Art'y. | U.S.C.T.

1 Benjamin G. Gardner,

Pvt., Co. A, 11 Reg't U. S. Col'd H. Art'y.

Appears on

Company Muster Roll

for July and August, 1865.

Present or absent Present.

Stoppage, $ 100 for

Due Gov't, $ 100 for

Valuation of horse, $ 100

Valuation of horse equipments, $ 100

Remarks:

Book mark:

R. Brannen
Copyist.

(358)

G. | 11 H. Art'y. | U.S.C.T.

1 Benjamin G. Gardner,

Priv., Co. A., 11 Reg't U. S. Col'd H. Art'y.

Appears on **Co. Muster-out Roll,** dated

New Orleans, La., Oct. 2, 1865.

Muster-out to date Oct. 2, 1865.

Last paid to Feb. 28, 1865.

Clothing account:

Last settled ....., 186 ; drawn since $ 100

Due soldier $ ..... 100 ; due U. S. $ 5. 70/100

Am't for cloth'g in kind or money adv'd $ 100

Due U. S. for arms, equipments, &c., $ — 96/100

Bounty paid $ ..... 100 ; due $ 100.00/100

Remarks: Joined Regt. Orgn.

Stopped 1 Gun Sling 1 W. 1 Belt, 1 W. B. Plate, 1 Tompion, 1 Wiper

Book mark :

M Grannis

(361) *Copyist.*

Gardner Benjamin G.

C, Co. ——, 11 Reg't USCHA

2 **Enclosures.**

Bed Cards	Final Statements
Burial Records	Furloughs or L. of A.
Certs. of Dis. for Discharge	Med. Certificates
C. M. Charges	Med. Des. Lists
Descriptive Lists	Orders
Discharge Certificates	Pris. of War Record
Enlistment Papers 1	Resignations

Other papers relating to—

Admission to Hosp'l	Furlough or L. of A.
Casualty Sheet	Med. Examination
Confinement 1	Misc. Information
Contracts	Pay or Clothing
Death or Effects	Personal Reports
Desertion	Rank
Discharge from Hosp'l	Transfer to Hosp'l
Discharge from Service	Transfer to V. R. C.
Duty	Transportation

MICROFILM PUBLICATION M 1832

COMPILED MILITARY SERVICE RECORDS
OF VOLUNTEER UNION SOLDIERS WHO SERVED WITH
THE UNITED STATES COLORED TROOPS (USCT)
11TH REGIMENT OF HEAVY ARTILLERY

PERSONAL PAPERS' TARGET SHEET

PLEASE NOTE THE CHECKED INFORMATION ABOUT THE PERSONAL PAPERS IN THIS FILE:

☐ NO PERSONAL PAPERS WERE FOUND IN THIS FILE WHEN THE RECORDS WERE ARRANGED FOR MICROFILMING.

☒ 3 PERSONAL PAPER(S) FOUND IN THIS FILE WHEN THE RECORDS WERE ARRANGED FOR MICROFILMING.

DECLARATION OF RECRUIT.

I, Benjamin F. Gardner desiring to VOLUNTEER as a Soldier in the *ARMY OF THE UNITED STATES*, for the term of three years, do declare that I am 36 years and 4 months of age; that I have never been discharged from the United States service on account of disability or by sentence of a court martial, or by order, before the expiration of a term of enlistment; and I know of no impediment to my serving honestly and faithfully as a soldier for the 1st Col. Cav. Heavy Artillery.

Given at Providence
The fourteenth day of August 1863.

Witness:
Fred. B. Vaughn. Benjamin F. Gardner

Volunteered at Providence R.I. *No.* 11 U.S.C.T.
By Benj. F. Gardner
Regiment of
enlistment; last served in Company ( )
Reg't of
Discharged 18

RECEIVED ADJUT. GEN'S OFFICE JUL 11 1871

CONSENT IN CASE OF MINOR.

I, Do CERTIFY that I am the
of ; that the said
is years of age; and I do hereby freely give
my CONSENT to his volunteering as a SOLDIER in the ARMY OF THE UNITED STATES for the period of

Given at
The day of

Witness:

VOLUNTEER ENLISTMENT.

State of Rhode Island Town of South Kingston

I, Benjamin F. Gardner born in South Kingston in the State of Rhode Island aged 36 years, and by occupation a Farmer DO HEREBY ACKNOWLEDGE to have volunteered this fourteenth day of August 1863, to serve as a SOLDIER in the ARMY OF THE UNITED STATES of AMERICA, for the period of three years, unless sooner discharged by proper authority: Do also agree to accept such bounty, pay, rations and clothing, as are, or may be, established by law for volunteers. And I, Benjamin F. Gardner do solemnly swear, that I will bear true faith and allegiance to the *United States of America*, and that I will serve them honestly and faithfully against all their enemies or opposers whomsoever; and that I will observe and obey the orders of the President of the United States, and the orders of the officers appointed over me, according to the Rules and Articles of War.

Sworn and subscribed to, at Providence this fourteenth day of August 1863. } Benjamin F. Gardner

BEFORE Geo. Palmer Justice of the Peace

I CERTIFY, ON HONOR, That I have carefully examined the above-named Volunteer, agreeably to the General Regulations of the Army, and that, in my opinion, he is free from all bodily defects and mental infirmity, which would, in any way, disqualify him from performing the duties of a soldier.

John Van Landingham

EXAMINING SURGEON.

I CERTIFY, ON HONOR, That I have minutely inspected the Volunteer, Benjamin F. Gardner previously to his enlistment, and that he was entirely sober when enlisted; that, to the best of my judgment and belief, he is of lawful age; and that, in accepting him as duly qualified to perform the duties of an able-bodied soldier, I have strictly observed the Regulations which govern the recruiting service. This soldier has dark hazel *eyes*, black *hair*, dark mulatto *complexion*, is 5' *feet*, 10 *inches high*.

First Lt. Company E Cavy Artillery R. I. Volunteers,

RANK OR

Wm H Shrive

RECRUITING OFFICER.

B-1 43 1864

Hd Qrs. 11th Regt Ch. I. Co
Plaquemine La. Sept. 9 64

Sypher. J. H. Col. Comdg Regt.
by Pt Lieut. J. C. Whiting, Adjt.

Orders that Private Benj. G.
Gardner. Co. A. 1st Batt. sent
here from Gen. Hosp. New Orleans
be attached to some Co. of 2d
Batt. until he can be returned
to his Co. at Fort Jackson La.

Recd, Sept. 10th. 1864.

Head Quarters 11th Reg. U.S.C.A.
Plaquemine La.
Sept. 9. 1864

Major J. G. Shaw.
11th Reg. U.S.C.A.
Com'dg Q'rs Guard
Plaquemine La.

Major,

I am directed by Brig. Gen. Dana to order Brig. S. Gardner of the 2d Brig. 2d Div. Sent Northern Div. 2d Brig. Gen. Hd. Qrs. New Orleans La. Gen. Gardner to proceed with his command to Donaldsonville La. to your Batty. Thence to Port Hudson La where he will report for duty.

By order of
Lt. Col. Seymour
Com'd'g Camp
Lt. Col. Murray Co.
Plaquemine La.

Lt.-Colonel

Benjamin F. Goodwin

Co. A 11th U.S.C. Heavy Artly

Adjutant General's Office,

COLORED TROOPS BRANCH,

January 1st, 1875

Vol. C. T., 187

Wanted in case of Benjamin G. Gardner Cpl, Co. "A",
11th Reg't U.S.C.H. Hy Arty

Copy of S.O. N° 30.

Muster Roll for March and April 64
reports him Present with remark "3 months pay stopped
by S.O. N° 230. April 9th 1864"

Respectfully,

Wm. Ellershaw

R. A. Woodward
Chief Clerk.
Per H. Halton

Adjutant General's Office,

Division of Records and Pleas.

Jany 15th, 1875.

Vol. C. T., 187

Reply in case of Benjamin G. Gardner, Co. "A";
11th Reg't U.S.C.H. Hy Arty.

G.O. No 30. Hdqrs 1st Div 13th A.C. April 9. 1864 - Charge -
Conduct prejudicial to good order and military discipline -
Findings - Guilty - Sentence - "xxxx to be confined at
hard labor at such place or places as proper authority
may designate for the term of three months, and forfeit
all pay [redacted] proper during said time" - Approved - So
much as relates to imprisonment is remitted -
Tried as of Co "A" 11th U.S.C.H. Hy Arty)

A.G.K.

Microfilmed

33—, 11 U.S.Col'd Inf.,

Enrd | Enrd

CARD NUMBERS.

1 6181440	26
2 6181599	27
3 6181690	28
4 94377132	29
5	30
6	31
7	32
8	33
9	34
10	35
11	36
12	37
13	38
14	39
15	40
16	41
17	42
18	43
19	44
20	45
21	46
22	47
23	48
24	49
25	50

Book Mark:

See also

G. | 11 H. Art. | U.S.C.T.

Charles F. Gardner

Recruit, Co. ....., 11 Reg't U. S. Col'd H. Art.

Appears on

Regimental Descriptive Book

of the organization named above.

DESCRIPTION. +

Age 18 years; height ..... feet ..... inches.

Complexion .....

Eyes ..... ; hair .....

Where born .....

Occupation .....

ENLISTMENT.

When Apr. 13- , 1865.

Where Providence - R. I.

By whom A. B. Ladsey; term 1 y'rs.

Remarks: Dis. Draft Rendez: New Haven Conn. May-10-1865.

+ No further description given.

F. A. Wright

(383*a*) Copyist.

G | 11 H.A. **U.S.C.T.**

Charles F. Gardner

Pvt., Co. ——, 11" Reg't U. S. Col'd H.A.

Appears on a

Detachment Muster Roll

of the organization named above

for March 1865.

Station New Haven Ct.

Present or absent Not stated

Stoppage, $ —— 100 for ——

Due Gov't, $ —— 100 for ——

Remarks: ——

Book mark: ——

Holcombe

(344) *Copyist.*

G | 11 H. Art'y. | U.S.C.T.

Charles F. Gardner

Appears with rank of Pvt on

Muster and Descriptive Roll of a Detachment of U. S. Vols. forwarded

for the 11 Reg't Mt C H Arty Roll dated

Providence R.I., Apl 18, 1865.

Where born Swansey Mass

Age 18 y'rs; occupation Farmer

When enlisted Apl 13, 1865.

Where enlisted Prov. R. I.

For what period enlisted 1 years.

Eyes dark; hair dark

Complexion dark; height 5 ft. 10 in.

When mustered in Apl 13, 1865.

Where mustered in Prov. R. I.

Bounty paid $ 100; due $ 100

Where credited Town of Warren
1 Sub dist. 1 Cong Dist. R. I.

Company to which assigned

Remarks: Recruit enlisted
to Arm'ts

Book mark:

Copyist.

G | 11 Reg | U.S.C.T.

Chas F. Gardner

Pri., Co. ....., 11 Reg't U. S. Col'd H.A.

Appears on a

Detachment Muster-out Roll

of the organization named above. Roll dated New Haven Conn, May 10, 1865.

Muster-out to date May 10, 1865.

Last paid to Pay due from enlistment 186

Clothing account:

Last settled ....., 186 ; drawn since $ 100

Due soldier $ ..... 100 ; due U. S. $ 100

Am't for cloth'g in kind or money adv'd $ 38 35/100

Due U. S. for arms, equipments, &c., $ 100

Bounty paid $ 33 1/3 100 due $ none 100

Remarks: Mustered out of service by authority from the War Dept dated x May 3/65 Apr 29. 65

Not taken up on rolls of regt

x "May 3. 65" cancelled by line

Book mark: .....

Donnelly

(349) *Copyist.*

Gardner, Charles L.

_____, _____, 11 Reg't U.S.C.H.A.

3 Enclosures.

Bed Cards _____	Final Statements _____
Burial Records _____	Furloughs or L. of A _____
Certs. of Dis. for Discharge _____	Med. Certificates _____
C. M. Charges _____	Med. Des. Lists _____
Descriptive Lists _____	Orders _____
Discharge Certificates _____	Pris. of War Record _____
Enlistment Papers 2	Resignations _____

Other papers relating to—

Admission to Hosp'l _____	Furlough or L. of A _____
Casualty Sheet 1	Med. Examination _____
Confinement _____	Misc. Information _____
Contracts _____	Pay or Clothing _____
Death or Effects _____	Personal Reports _____
Desertion _____	Rank _____
Discharge from Hosp'l _____	Transfer to Hosp'l _____
Discharge from Service _____	Transfer to V. R. C. _____
Duty _____	Transportation _____
_____	_____

DECLARATION OF RECRUIT.

I, Charles F Gardner, desiring
VOLUNTEER as a Soldier in the Army of the United States, for the term of ~~THREE~~ one YEARS,
Do Declare, That I am 17 years and ..... months
of age; that I have never been discharged from the United States service on account of disability or by sentence of a court martial, or by order before the expiration of a term of enlistment; and I know of no impediment to my serving honestly and faithfully as a soldier for ~~three~~ one years.

GIVEN at Providence R. I.
the 18th day of April 1865.

Witness:
C. J. Wheeler

Charles F Gardner

No. 4187
Charles F Gardner
Volunteered at Providence R.I.
April 18, 1865,
By Lt. Col. Chauncey
Eleventh Regiment of R.I. Vols.

Discharged ..... 18 .
Reg't of ..... enlistment; last served in Company ( )

Private, Co. ( ), 1st Regt. R.I. Cav.

NOTE 1.—This blank will be used for both enlistments and re-enlistments—enlistment of veterans, &c., &c., in the volunteer service. They will be made out in duplicate in all cases—one to accompany the recruiting return of the superintendent (not the recruiting officer) to the Adjutant General, and one to accompany the accounts of the officer who pays bounty, &c. The Regiment and Company in which the soldier last served should be given on the back.

NOTE 2.—An enlistment holds to service. A muster-in must, in all cases, precede payment of pay, bounty, pension, &c. A muster-in roll must, in all cases, be filed in the Adjutant General's Office as evidence of muster-in. The mustering officer, commissary, or assistant commissary of musters, as the case may be, will countersign both enlistments as having mustered the soldier into the service of the United States before either of them is given to the disbursing officer.

CONSENT IN CASE OF MINOR.

I, Pamelia Gardner, DO CERTIFY, That I am
the Mother of Charles F Gardner; that the
said Charles F Gardner is 17 years of age; and I
do hereby freely give my CONSENT to his volunteering as a SOLDIER in the ARMY OF THE UNITED STATES
for the period of ~~THREE~~ one YEARS.

GIVEN at Providence R. I.
the 18th day of April 1865

Witness:
O. Winsor

Pamelia her X Gardner
mark

(A. G. O. No. 74 & 76.)

VOLUNTEER ENLISTMENT.

STATE OF Rhode Island TOWN OF Smithfield

I, Charles F Gardner, born in Smithfield, in the State of Main, aged 18 years, and by occupation a Farmer, DO HEREBY ACKNOWLEDGE to have volunteered this 13th day of April, 1865, to serve as a **Soldier** in the **Army of the United States of America,** for the period of ~~THREE~~ one YEARS, unless sooner discharged by proper authority: Do also agree to accept such bounty, pay, rations, and clothing, as are, or may be, established by law for volunteers. And I, C F Gardner, do solemnly swear, that I will bear true faith and allegiance to the ***United States of America,*** and that I will serve them honestly and faithfully against all their enemies or opposers whomsoever; and that I will observe and obey the orders of the President of the United States, and the orders of the officers appointed over me, according to the Rules and Articles of War.

Sworn and subscribed to, at Smithfield
this 13th day of April, 1865,
BEFORE Chas J Wheeler Justice of the Peace

Charles F Gardner

I CERTIFY, ON HONOR, That I have carefully examined the above-named Volunteer, agreeably to the General Regulations of the Army, and that, in my opinion, he is free from all bodily defects and mental infirmity, which would in any way disqualify him from performing the duties of a soldier.

F. H. Peckham
2d Div 2d C

EXAMINING SURGEON.

I CERTIFY, ON HONOR, That I have minutely inspected the Volunteer C F Gardner previously to his enlistment, and that he was entirely sober when enlisted; that, to the best of my judgment and belief, he is of lawful age; and that, in accepting him as duly qualified to perform the duties of an able-bodied soldier, I have strictly observed the Regulations which govern the recruiting service. This soldier has Dark *eyes,* Dark *hair,* Dark *complexion,* is 5 *feet* 10 *inches* high.

A. B. Chadsey
Capt 1st Regt Inf Regiment of Volunteers,
2d Div 2d C RECRUITING OFFICER

(A. G. O. No. 74 & 76.)

Certificate for the Signature of the Mustering Officer, Commissary, or Assistant Commissary of Musters, as the case may be.

Mustered into the service of the United States, for ~~three~~ one years or during the war, from date of enlistment, in Co. Cleveland Regiment of U.S. Col Inf Volunteers, on the 13th day of April, 1865, at Elmira in the Town of Elmira and credited to ~~Ward, for~~ Sub-district,) in the Town of Elmira, in the County of Chemung, in the Congressional District, in the State of New York

Bounty paid at time of Muster-in:

U. S. Bounty, ——

Local Bounty, $200

A. B. Chadsey
Capt 1st Regt Inf
2d Div 2d C

DECLARATION OF RECRUIT.

I, Charles F Gardner, desiring one
VOLUNTEER as a Soldier in the Army of the United States, for the term of ~~THREE~~ YEARS,
Do Declare, That I am 17 years and ..... months
of age; that I have never been discharged from the United States service on account of disability or by sentence of a court martial, or by order before the expiration of a term of enlistment; and I know of no impediment to my serving honestly and faithfully as a soldier for ~~three~~ one years.

GIVEN at Providence R I
the 13th day of April 1865

Witness:
C J Wheeler

Charles F Gardner

No. 47
Charles F Gardner
Volunteered at Providence RI
April 13th, 1865.
By C C Chaffee
Col 1st R I Cavalry
To serve 1 year
Regiment of
enlistment; last served in Company ( )
Reg't of
Discharged
, 18 .
11th U. S. Col'd Heavy

NOTE 1.—This blank will be used for both enlistments and re-enlistments—enlistment of veterans, &c., &c., in the volunteer service. They will be made out in duplicate in all cases—one to accompany the recruiting return of the superintendent (not the recruiting officer) to the Adjutant General, and one to accompany the accounts of the officer who pays bounty, &c. The Regiment and Company in which the soldier last served should be given on the back.

NOTE 2.—An enlistment holds to service. A muster-in must, in all cases, precede payment of pay, bounty, pension, &c. A muster-in roll must, in all cases, be filed in the Adjutant General's Office as evidence of muster-in. The mustering officer, commissary, or assistant commissary of musters, as the case may be, will countersign both enlistments as having mustered the soldier into the service of the United States before either of them is given to the disbursing officer.

CONSENT IN CASE OF MINOR.

I, Pamelia Gardner, DO CERTIFY, That I am
the Mother of Charly F Gardner; that the
said Charles is 17 years of age; and I
do hereby freely give my CONSENT to his volunteering as a SOLDIER in the ARMY OF THE UNITED STATES
for the period of ~~THREE~~ one YEARS.

GIVEN at Providence RI
the 13th day of April 1865

Witness:
O Winsor

her
Pamelia x Gardner
mark

(A. G. O. No. 74 & 75.)

VOLUNTEER ENLISTMENT.

STATE OF Rhode Island TOWN OF Providence

I, Charles J. Gardner, born in Swanzey, in the State of Mass, aged 18 years, and by occupation a Farmer, Do HEREBY ACKNOWLEDGE to have volunteered this 13th day of April, 1865, to serve as a ***Soldier*** in the **Army of the United States of America,** for the period of ~~THREE~~ one *YEARS*, unless sooner discharged by proper authority: Do also agree to accept such bounty, pay, rations, and clothing, as are, or may be, established by law for volunteers. And I, Charles J. Gardner, do solemnly swear, that I will bear true faith and allegiance to the ***United States of America,*** and that I will serve them honestly and faithfully against all their enemies or opposers whomsoever; and that I will observe and obey the orders of the President of the United States, and the orders of the officers appointed over me, according to the Rules and Articles of War.

Sworn and subscribed to, at Providence this 13th day of April, 1865, Before Chas J. Wheeler Justice of the Peace } Chas J. Gardner

I CERTIFY, ON HONOR, That I have carefully examined the above-named Volunteer, agreeably to the General Regulations of the Army, and that, in my opinion, he is free from all bodily defects and mental infirmity, which would in any way disqualify him from performing the duties of a soldier.

F. H. Peckham
2d Asst R.I.S.

EXAMINING SURGEON.

I CERTIFY, ON HONOR, That I have minutely inspected the Volunteer C. J. Gardner previously to his enlistment, and that he was entirely sober when enlisted; that, to the best of my judgment and belief, he is of lawful age; and that, in accepting him as duly qualified to perform the duties of an able-bodied soldier, I have strictly observed the Regulations which govern the recruiting service. This soldier has Dark *eyes*, Dark *hair*, Dark *complexion*, is 5 *feet* 10 *inches* high.

A. B. Chaffee
Capt't Regiment of 2nd R.I. Volunteers,
2nd Regt R.I.S. RECRUITING OFFICER

A. G. O. No. 74 & 76.)

Certificate for the Signature of the Mustering Officer, Commissary, or Assistant Commissary of Musters, as the case may be.

Mustered into the service of the United States, for ~~three~~ one years or during the war, from date of enlistment, in Co. C, Regiment of R.I. Cav. Volunteers, on the 13th day of April, 1865, at Pawtucket, to 19½ Wards, (or Sub-district,) in the Town of Pawtucket, in the County of Providence, Congressional District, in the State of R.I.

Bounty paid at time of Muster-in:

U. S. Bounty, ——

Local Bounty, $200

A. B. Chaffee
Capt 1st R.I. Cav
2nd Regt R.I.S.

CASUALTY SHEET

No. 2

C. F. Gardner

Pvt. of Company

H Regiment of U.S.C.T.

State Volunteers.

NATURE OF CASUALTY.

Discharge

May 16/65.

RECEIVED
OCT
1865

CASUALTY SHEET.

Name: Chas. F. Gardner

Rank: Pvt. — *Company:* — *Regiment:* 11th

Arm: Inf. *State:* U.S.A.

Nature of Casualty: Discharge

CAUSE OF CASUALTY—(NAME OF DISEASE, &C.)

DEGREE OF DISABILITY.

BY WHOM CERTIFIED.

DATE OF DISCHARGE, DEATH, &c.

May 10/65

PLACE OF DISCHARGE, DEATH, &c.

New Hav., Ct.

BY WHOM DISCHARGED.

FROM WHAT SOURCE THIS INFORMATION WAS OBTAINED.

Roll 25, Dr. Reed. New Hav., Ct.

REMARKS.

Abel Buckbee

Clerk.

(170)

[illegible]

[illegible]

[illegible]

CARD NUMBERS.

1 61822199	26
2 61823455	27
3 61824998	28
4 61826638	29
5 61827775	30
6 61829906	31
7 61830546	32
8 61831712	33
9 61832854	34
10 61833393	35
11 61835501	36
12 61836607	37
13 61837714	38
14 91239633	39
15 91238111	40
16	41
17	42
18	43
19	44
20	45
21	46
22	47
23	48
24	49
25	50

Book Mark:

See also

J. B. Dowd
Esq

P/1660086 P.O. Rec
P290937 Awd
P.O. Amdt D.C. 1063544
4/13/17 EOC
S.S.A. 4/7/32 CSR

G | 11 H. Art'y. | U.S.C.T.

Charles H. Gardner

, Co. A, 11 Reg't U. S. Col'd H. Art'y.

Appears on

Company Descriptive Book

of the organization named above.

DESCRIPTION.

Age 22 years; height 5 feet 8 inches.

Complexion Dk Brown

Eyes Blk; hair Blk

Where born Newyork ny

Occupation Barber

ENLISTMENT.

When Aug 10, 1863.

Where Providence

By whom Whelm; term 3 y'rs.

Remarks:

(3330) *Copyist.*

G | 11 H. Art'y. | U.S.C.T.

Charles H. Gardner

, Co A, 11 Reg't U. S. Col'd H. Art'y.

Appears on

Company Descriptive Book

of the organization named above.

DESCRIPTION.

Age 22 years; height 5 feet 8 inches.

Complexion Dk Brown

Eyes Blk; hair Blk

Where born New York N Y.

Occupation Barber

ENLISTMENT.

When Aug 10, 1863.

Where Providence

By whom W H Helme; term 3 y'rs.

Remarks:

James

(3856) *Copyist.*

G | 11 H. Art'y. | U.S.C.T.

Charles H. Gardner

Pvt., Co. A, 14 Reg't R. I. Col'd H. Art'y.*

Age 22 years.

Appears on

Company Muster-in Roll

of the organization named above. Roll dated Camp Smith near Providence R. I., Aug 28, 1863.

Muster-in to date Aug 28, 1863.

Joined for duty and enrolled:

When July 10, 1863.

Where Providence

Period 3 years.

Valuation of horse, $ 100

Valuation of horse equipments, $ 100

Remarks: 1st District

* This organization subsequently became Co. A, 11 Reg't U. S. Colored Heavy Artillery.

Book mark:

Prewitt

(356) Copyist.

A | 11 H. Art'y. | U.S.C.T.

Charles A. Gardner

Pvt., Co. A, 14 Reg't R. I. Col'd H. Art'y.*

Appears on

Company Muster Roll

for Aug 28 to Dec 31, 1863.

Present or absent Present

Stoppage, $ ---- 100 for ----

Due Gov't, $ ---- 100 for ----

Valuation of horse, $ ---- 100

Valuation of horse equipments, $ ---- 100

Remarks: ----

*This organization subsequently became Co. A, 11 Reg't U. S. Colored Heavy Artillery.

Book mark: ----

Prewitt

Copyist.

G | 11 H. Art'y. | U.S.C.T.

Charles H. Gardner

Pvt., Co. A, 14 Reg't R. I. Col'd H. Art'y.*

Appears on

Company Muster Roll

for Jan & Feb, 186 4.

Present or absent Present

Stoppage, $ 100 for

Due Gov't, $ 100 for

Valuation of horse, $ 100

Valuation of horse equipments, $ 100

Remarks:

*This organization subsequently became Co. A, 11 Reg't U. S. Colored Heavy Artillery.

Book mark:

Prewitt

(358) Copyist.

G | 11 H. Art'y. | U.S.C.T.

Charles H. Gardner

Pvt, Co. A, 14 Reg't R. I. Col'd H. Art'y.*

Appears on

Company Muster Roll

for Mch & Apl, 1864.

Present or absent Present

Stoppage, $ 100 for

Due Gov't, $ 100 for

Valuation of horse, $ 100

Valuation of horse equipments, $ 100

Remarks: 3 mo. pay stopped G.O. No. 28. Apl. 5, 1864

*This organization subsequently became Co. A, 11 Reg't U. S. Colored Heavy Artillery.

Book mark:

Prewitt

Copyist.

G | 11 H. Art'y. | U.S.C.T.

Chas. H. Gardner

Pvt., Co. A, 8 Reg't U. S. Col'd H. Art'y.*

Appears on

Company Muster Roll

for May & June, 1864.

Present or absent Present

Stoppage, $ 100 for

Due Gov't, $ 100 for

Valuation of horse, $ 100

Valuation of horse equipments, $ 100

Remarks: 3 months pay stopped G.O. No. 28. Apl. 5. H.Q. 18th A.C.

* This organization subsequently became Co. A, 11 Reg't U. S. Colored Heavy Artillery.

Book mark:

Prewitt

Copyist.

G. | 11 H. Art'y. | U.S.C.T.

Charles H. Gardner

R. I., Co. A, 11 Reg't U. S. Col'd H. Art'y.

Appears on

Company Muster Roll

for July & Aug., 1864.

Present or absent Present

Stoppage, $.....100 for .....

.....

Due Gov't, $.....100 for .....

.....

.....

Valuation of horse, $.....100

Valuation of horse equipments, $.....100

Remarks: Is no pay stopped
G. O. No. 28 Hdqrs. 3 1864
Hd. Qrs. 13 A. C.
Dated April 19. 1861

.....

.....

.....

.....

.....

Book mark: .....

.....

(358) Copyist.

Co. | 11 H. Art'y. | U.S.C.T.

Thos. A. Gardner

Pvt., Co. A, 11 Reg't U. S. Col'd H. Art'y.

Appears on

Company Muster Roll

for Sept. & Oct., 1864.

Present or absent Present

Stoppage, $ 100 for

Due Gov't, $ 100 for

Valuation of horse, $ 100

Valuation of horse equipments, $ 100

Remarks:

Book mark:

Copyist.

G | 11 H. Art'y. | U.S.C.T.

Charles W. Gardner

R'k, Co. A, 11 Reg't U. S. Col'd H. Art'y.

Appears on

Company Muster Roll

for Nov. & Dec., 1864.

Present or absent Present

Stoppage, $ 3 4/100 for C. & G. E.

Due Gov't, $ 100 for

Valuation of horse, $ 100

Valuation of horse equipments, $ 100

Remarks:

Book mark:

C. H. Clark

(358) Copyist.

G. | 11 H. Art'y. | U.S.C.T.

Charles H. Gardner

Pvt., Co. A, 11 Reg't U. S. Col'd H. Art'y.

Appears on

Company Muster Roll

for Jan. & Feb., 1865.

Present or absent Present

Stoppage, $ 3 07/100 for C. & G. C.

Due Gov't, $ 100 for

Valuation of horse, $ 100

Valuation of horse equipments, $ 100

Remarks:

Book mark:

C. F. Clark

(358) Copyist.

C	11 H. Art'y.	U.S.C.T.

Charles H. Garner

Pvt., Co. A, 11 Reg't U. S. Col'd H. Art'y.

Appears on

Company Muster Roll

for Mar. & Apr., 1865.

Present or absent Present

Stoppage, $ 1 75/100 for Ordnance

$3.04 " C. & C.

Due Gov't, $ 100 for

Valuation of horse, $ 100

Valuation of horse equipments, $ 100

Remarks:

Book mark:

(358) B. F. Hall Copyist.

G. | 11 H. Art'y. | U.S.C.T.

Charles H. Gardner,

Pvt., Co. A, 11 Reg't U. S. Col'd H. Art'y.

Appears on

Company Muster Roll

for May and June, 1865.

Present or absent Present.

Stoppage, $ 100 for

Due Gov't, $ 100 for

Valuation of horse, $ 100

Valuation of horse equipments, $ 100

Remarks: Stoppage for Ordnance $1.75.

Book mark:

T M Granniss

Copyist.

G. | 11 H. Art'y. | U.S.C.T.

Charles H. Gardner,

Pvt., Co. A, 11 Reg't U. S. Col'd H. Art'y.

Appears on

Company Muster Roll

for July & August, 1865.

Present or absent Present.

Stoppage, $1.$\frac{75}{100}$ for ordnance.

Due Gov't, $\_\_\_\_\_$\frac{00}{100}$ for _____

Valuation of horse, $\_\_\_\_\_$\frac{00}{100}$

Valuation of horse equipments, $\_\_\_\_\_$\frac{00}{100}$

Remarks: 1 Mus. ray stoppage by Garrison C. Ch. G. C. No. 7 Hd. Qrs. 1st Batt. 11 U.S.C.A. Hy. Aug. 3/65.

Book mark:

(358) R. H. Brauner
Copyist.

G. | 11 H. Art'y. | U.S.C.T.

Charles H. Gardner,

Pvt., Co. A, 11 Reg't U. S. Col'd H. Art'y.

Appears on **Co. Muster-out Roll,** dated

New Orleans, La., Oct. 2, 1865.

Muster-out to date Oct. 2, 1865.

Last paid to Feb. 28, 1865.

Clothing account:

Last settled ....., 186 ; drawn since $ 100

Due soldier $ ..... 100; due U. S. $ 20. 97/100

Am't for cloth'g in kind or money adv'd $ 100

Due U. S. for arms, equipments, &c., $ 6. 00/100

" " " " " " 5.25

Bounty paid $ ..... 100; due $ 100. 00/100

Remarks: Joined Regt. Organ. Stuffed 1 N. 1 Belt, 1 C Punch, 1 B. Scabbard, 1 B.N. Plate, 1 Cty B. Plate, 1 Cty B. 1 B. Plate, 1 Bedsack. Stuffed for 1 Musket and Accouts. retained. (over)

Book mark: .....

P. W. Spaumer

(361) *Copyist.*

JAN.14
61837141

One mo. pay stopped G.
C. M. G. C. Or: 7 Md. Inf.
1st Batt. 11th U.S. C. Arty.
Aug. 3/65. Sentence annulled
by Brt. Maj. Genl. Sherman
T. N. Sept. 12/65.

Gardner Charles H.

C, Co. ——, 11 Reg't Mass Inf

4 Enclosures.

Bed Cards ----	Final Statements ----
Burial Records ----	Furloughs or L. of A. ----
Certs. of Dis. for Discharge ----	Med. Certificates ----
C. M. Charges 2	Med. Des. Lists ----
Descriptive Lists ----	Orders ----
Discharge Certificates ----	Pris. of War Record ----
Enlistment Papers 1	Resignations ----

Other papers relating to—

Admission to Hosp'l ----	Furlough or L. of A. ----
Casualty Sheet ----	Med. Examination ----
Confinement V	Misc. Information ----
Contracts ----	Pay or Clothing ----
Death or Effects ----	Personal Reports ----
Desertion ----	Rank ----
Discharge from Hosp'l ----	Transfer to Hosp'l ----
Discharge from Service ----	Transfer to V. R. C. ----
Duty ----	Transportation ----
----	----

MICROFILM PUBLICATION M 1832

COMPILED MILITARY SERVICE RECORDS
OF VOLUNTEER UNION SOLDIERS WHO SERVED WITH
THE UNITED STATES COLORED TROOPS (USCT)
11TH REGIMENT OF HEAVY ARTILLERY

PERSONAL PAPERS' TARGET SHEET

PLEASE NOTE THE CHECKED INFORMATION ABOUT THE PERSONAL PAPERS IN THIS FILE:

☐ NO PERSONAL PAPERS WERE FOUND IN THIS FILE WHEN THE RECORDS WERE ARRANGED FOR MICROFILMING.

☒ 7 PERSONAL PAPER(S) FOUND IN THIS FILE WHEN THE RECORDS WERE ARRANGED FOR MICROFILMING.

DECLARATION OF RECRUIT.

I, Charles H. Gardner desiring to VOLUNTEER as a Soldier in the *ARMY OF THE UNITED STATES*, for the term of three years, do declare that I am 22 years and 3 months of age; that I have never been discharged from the United States service on account of disability or by sentence of a court martial, or by order, before the expiration of a term of enlistment; and I know of no impediment to my serving honestly and faithfully as a soldier for the First Lt. Col. Com. Heavy Artillery.

Given at Providence
The tenth day of August 1863.

Witness:

Fred. B. Waugh.

Charles H. Gardner

No. 1110

Enlisted [illegible]

Volunteered at Providence R.I.

Age 22 years

By Mr Hall

Regiment of Heavy Artillery

enlistment; last served in Company ( )

Reg't of [illegible]

Discharged [illegible] 18

RECEIVED JUL 11 1871

CONSENT IN CASE OF MINOR.

I, Do Certify that I am the of ; that the said is years of age; and I do hereby freely give my CONSENT to his volunteering as a SOLDIER in the ARMY OF THE UNITED STATES for the period of

Given at
The day of

Witness:

VOLUNTEER ENLISTMENT.

State of Rhode Island

Town of Cumberland

I, Charles H. Gardner born in New York

in the State of New York aged 22 years, and by occupation a Farmer

DO HEREBY ACKNOWLEDGE to have volunteered this tenth day of August 1863, to serve as a SOLDIER in the ARMY OF THE UNITED STATES of AMERICA, for the period of three years, unless sooner discharged by proper authority: Do also agree to accept such bounty, pay, rations and clothing, as are, or may be, established by law for volunteers. And I, Charles H. Gardner do solemnly swear, that I will bear true faith and allegiance to the *United States of America*, and that I will serve them honestly and faithfully against all their enemies or opposers whomsoever; and that I will observe and obey the orders of the President of the United States, and the orders of the officers appointed over me, according to the Rules and Articles of War.

Sworn and subscribed to, at Providence
this tenth day of August 1863.
BEFORE Me Charles H Gardner

I CERTIFY, ON HONOR, That I have carefully examined the above-named Volunteer, agreeably to the General Regulations of the Army, and that, in my opinion, he is free from all bodily defects and mental infirmity, which would, in any way, disqualify him from performing the duties of a soldier.

Johnson Gardner M.D.

EXAMINING SURGEON.

I CERTIFY, ON HONOR, That I have minutely inspected the Volunteer, Charles H. Gardner previously to his enlistment, and that he was entirely sober when enlisted; that, to the best of my judgment and belief, he is of lawful age; and that, in accepting him as duly qualified to perform the duties of an able-bodied soldier, I have strictly observed the Regulations which govern the recruiting service. This soldier has *eyes*, *hair*, *complexion*, is *feet*, *inches high*.

First-colored company Heavy Artillery.
Regiment of Rhode Island *Volunteers*,

Wm H. Hahn RECRUITING OFFICER.

Sentenced to 14 days
hard labor, and to for-
feit one months pay.
Plea Guilty.
Aug 3d 1865.

Chas. H. Gardner
P. A.

Charges & Specifications preferred against
Charles H. Gardner a private in (A) Company
Eleventh Regiment U.S. C.A. (Heavy)

Charge:- Absent Without leave.

Specification:- In this that he the said
Private Charles H Gardner (Co "A" 11th Regt U.S.C.A. Hy) having a pass to return
to camp at three Oclock P.M. did not return
until after Taps, thereby absenting himself
from Camp, and Drill, Dress Parade and Sabre
Roll Call, all this at Pratt Gear City, La.
On or about the Seventeenth day of July 1865

Witness.
1st Lt. C. H. Chase, 11th Regt U.S.C.A. Hy
2d Lt. C. D. Green " " " "

J. E. Silcox
2d Lieut 11th U.S.C.A. Hy

Mr. Ollestroot.

Charles H. Gardner

Co "A" 11th U.S.C. Hvy Artly

Adjutant General's Office,

COLORED TROOPS BRANCH,

January 7th, 1875

Vol. C. T., 187

Wanted in case of Charles H. Gardner Pvt, Co. A,

11 Reg't U.S.C.T. Hy Arty

Copies of S.O. No. 28

Muster Roll for March and April for rejects from Present with remark "3 months pay stopped per S.O. No 28 Hdqrs 1st Div 13th A.C. April 5th 1864."

Respectfully,

W. Ellerbrook.

R. A. Woodward
Chief Clerk.
Per J. Halton

Adjutant General's Office,

Division of Records and Blanks.

January 15th, 1875.

Vol. C. T., 187

Reply in case of Charles H. Gardner, Co. "A",

11th Reg't U.S.C.T. (Hy)

S.O. No 28. Hdqrs 1st Div 13th A.C. April 5th 1864 —

Charge - Conduct prejudicial to good order and military discipline —

Findings - Guilty - Sentence - "x x x to be confined at hard labor at such place or places as the proper authority may designate for the term of three months, and forfeit all pay proper during said time" - Approved - So much as relates to imprisonment is remitted — Tried as of Co "A" 11th R.I. Hy Artly —

R.B.K.

Mr. Ellenbrooks

Charles H. Gardner

Co. A. 11th U.S. Col Heavy Artly

Adjutant General's Office,

COLORED TROOPS BRANCH,

January 21st, 1875.

Vol. C. T., 187

Wanted in case of Charles K. Gardner Pvt, Co. "A",

11 Reg't U.S.C. Hvy Artly

Copy of G.O. No 7

Muster Roll for July & August 1865 reports him Present, with remark "One month's pay stopped by Garrison C.M. G.O. No 7 Hd Qrs 1st Batt 11th U.S.C.A. (Hvy) Aug 3rd 1865."

Respectfully,

Mr. Ellerbrook.

R. A. Woodward
Chief Clerk.

Sw H Hatton

Adjutant General's Office,

Division of Discontinued Commands.

Janry 26th, 1875.

Vol. C. T., 187

Reply in case of Charles K. Gardner, Co. "A",

11th Reg't U.S.C.A. (Hvy)-

G.O. No 7 Hdqrs 1st Batt 11th U.S.C.A. (Hvy) - Augt 3. 1865.

Charge - Absent without leave - Plea - Guilty - Sentence - "xxxx to 14 days hard labor at such place as the Comdg Officer may direct, and to forfeit to the U.S. Govt one months pay."

Approved

R.B.K.

H'Qrs U.S. Forces
O.H. Yaeger
Pro Tem
Brashear La
Aug 3rd 1865.

Proceedings of a Garrison
Court Martial, Convened at
Post Brashear La pursuant
to S.O. No 26. H'Qrs U.S.
Forces, Brashear La. and of which
Capt J. Horace McGee 10th Iowa Cav
is Pres't.

Respectfully forwarded.

A.J. Fitzwater
Maj 17th U.S. Cav
~~A.J. Fitzwater~~
Comm'dg Post.

~~H'Qrs Dist of La.~~
Headquarters East. Dist. of La.
New Orleans Sept. 12th. 1865.

The trial of this case by a Garrison
Court being illegal, the sentence is
null & void & will not be executed.

By order of
Bvt Maj. Gen. D. W. Sherman
D. H. Campbell
Capt. & Ass't. Adj't. Gen'l.

Proceedings of

a Garrison Court Martial

in case of

United States

vs.

Private Edward H. Gardner

Co. "F" 11th Massachusetts Infantry Artillery Heavy

Fortress Co.

April 26th 1865.

No 1

Proceedings of Garrison Court Martial which convened at Bonham Texas by virtue of the following Order.

Head quarters U.S. Forces
Bonham Texas
July 2nd 1865.

General Order
No 26

A Garrison Court Martial will convene at this Post to-morrow morning at 10 A.M. or as soon thereafter as practicable for the trial of such persons as may be brought before it.

2nd Lieut 1st Regiment U.S.C.T. Heavy Artillery Major and Judge Advocate will preside.

Detail for the Court.

Captain Horace McGinnis 1st Reg U.S.C.T. Heavy
1st Lieut Charles H Crane 11th Reg U.S.C.T. Heavy
2nd Lieut William Harrison 11th Reg U.S.C.T. Heavy

By order of
Major F.D. Pettigrew
Cmdg Post

George M. Weeden
1st Lieut and Post Adjt.

Brandon Co., July 28th 1865.

U. S. M. H. The court met pursuant to the foregoing order.

Present

Captain J Kenner Holmes 11th Regt U.S.C.T. Pres
1st Lieut Charles H Chase 11th Regt U.S.C.T. Mb
2nd Lieut William Hanover 11th Regt U.S.C.T. Mb

The court then proceeded to the trial of Private Charles H Gardner Company A 11th regiment U. S. Colored Troops who was called before the court and having heard the order appointing the court found upon asked if he had any objections to any member named in the order.

The accused having no objections to any of the members, the court ~~and the judge advocate~~ was then sworn pursuant duly sworn according to law.

The accused Private Charles H. Gardner company A 11th Regiment U. S. Colored Infantry Regt was arraigned on the following charge and specification

Charge - Absent without leave

Specification - In this that he, the said

Private Charles H. Gardner Company "A"
11th Regiment U.S Colored Infantry (Col) having
a pass to return to camp at three o'clock
P.M. did not return until after "Taps"
thereby absenting himself from camp and
duty, was punished with extra drill.
At Brownsville Texas on or about
the twentieth day of July 1863.

To which charge and specification the
accused pleaded as follows:

To the specification- "Guilty"
To the Charge - Guilty

Question by judge advocate.
Have you any statement or explanation
to make, in regard to the cause of your
absence?

Answer. "Yes sir, I had been drinking
a little, and when my pass was out
I was not sir a condition to come to
camp and thought it would be better to
stay around until I got better. I thought
that would be the best way. Thats all."

The court now then closed for deliber-
ation, and having maturely considered
the ~~evidence~~ ~~address~~ cause in defence, find the accused
Private Charles H. Gardner Company "A"

11th Regiment U. S. Colored Artillery (Hy)
12 Gallery.

Of the specification "Guilty"
Of the Charge "Guilty"

And the Court do therefore sentence him, Private Charles H. Quarles Company A 11th Regiment U S Colored Artillery (Hy) to be confined at the Government Penitentiary at Albany Kentucky, and to be confined at hard labor, at such place as the Commanding Officer may direct.

J. Horace McGuire
Capt 10th U. S. Colored Artillery (Hy)
President

William Harrison
2nd Lieut 11th U. S. C. A. (Hy) Recorder

~~Then being duly sworn~~ The Court ~~adjourned~~ then adjourned to meet again at 10 o'clock A.M. to-morrow, the 29th inst.

J. Horace McGuire
Capt 10 U. S. C. A. (Hy) President

William Harrison
2nd Lieut 11th U. S. C. A. (Hy.
Recorder

1

Hd Qrs U. S. Forces
Brashear La
August 3rd 1865.

The proceedings, findings, and sentence in the foregoing case is approved.

Post Brashear is designated as the place of confinement. The Comdy Comdr will see that the fine imposed is charged upon the next Pay Roll.

N. J. Fitzwater
Major 11th U.S. Colrd
Commndg Post.

Write nothing above this line.

C. Gardner cited, July 9, 64 and Sept 29 to Oct 1, 1865. Do these refer to claim?

Manning
MDO

Med. Sec.

No Charles C. Gardner in regt.

Charles H. Gardner served in Co. A.

No other Gardner in regt bearing name Charles except a Charles F. Gardner who served in unassigned 11 U.S.C. Hy Arty from April 13/65 to May 10/65.

Johnson
ERC

Index to Cas no ev.
MDO

Med statement made
13 cards rec'd
MDO

FORM No. 124-1, A. G. O.
Ed. July 10-15—500,000.

c 3—631

4

Statement of Service Reference Slip.

Office Pension

Claim No. I. C. 1,063,544

Charles H. Gardner
(Name.)

....., Co. A, 11 Reg't U.S.C. Hy Arty

To Archives Div. April 13, 1917

For date of confinement & release.

Tried by C. M. Oct 3, 1865 & sent. to 14 da. confinement at hard labor & forfeit 1 mo. pay.

1100 Johnson
ERC

V.R. &c
No record of any trial &c or period of absence (confinement) (OVER)

Statement furnished 4-14, 1917
MDO

Form No. 447—A. G. O.
Ed. Sept. 23-16—10,000.

A/
found -
12 35c Hanley
pm A 4-4

To med. Sec.
For medrec -
No med. f. f.
1 50 Johnson
Eole
7.

V. R. R. Sec:
Med records show:
Charles C. Gardner, P A
11 U. S. C. H. A., Aug 28 to Sept 3, '64;
Nov 22, Dec 5 + 7, '64, Feb 6, 15 + 20, '65 and age 9 to 13, '65.
Chas Gardner, etc. March 1 to 3 + 19 + 26 to 29, '64; Aug 2 + 26, '64; Sept 4, 7, 14, 17 + 19, '64; Oct 7 + 31, '64, Nov 2, 12 to 14, 20, 24, 25 + 27, '64; Dec 6 + 8, '64; Jan 20 to 25, '65; Feb 5 to 7, 9 to 14, 16, 19 to 22 + 19 to March 3, March 19, 26 to 29, '64 Age 14 + 19, '65; May 12, 15 to 17, 23 to 27, '65; June 8 + 11 to 14, '65 July 14 to 17, '65 and Aug 1 + '65 +

c 3—684 Write nothing below this line.

22

11 U.S.Col'd.Inf.

Ernesti	Orpheus

CARD NUMBERS.

1 6194290	26
2 6194447	27
3 6194590	28
4 6194700	29
5 6194839	30
6 6194978	31
7 6195112	32
8 6195248	33
9 6195380	34
10 6195510	35
11 6195643	36
12 6195774	37
13 6195900	38
14 9125329	39
15	40
16	41
17	42
18	43
19	44
20	45
21	46
22	47
23	48
24	49
25	50

Book Mark:

See also

G | 11 H. Art'y. | U.S.C.T.

Daniel A Gaines

H
....., Co. ....., 11 Reg't U. S. Col'd H. Art'y.

Appears on

Company Descriptive Book

of the organization named above.

DESCRIPTION.

Age 28 years; height 5 feet 8 inches.

Complexion Dk

Eyes Blk; hair Blk

Where born E Greenwich, RI

Occupation Laborer

ENLISTMENT.

When Nov 2, 186 3

Where Prov RI

By whom JC Engley; term 3 y'rs.

Remarks: Appointed Corpl.
May 30/64

W J. Roe

(383g) *Copyist.*

G | 11 H. Art'y. | U.S.C.T.

Daniel A. Gardner

Pvt., Co. K, 14 Reg't R. I. Col'd H. Art'y.*

Age 28 years.

Appears on

Company Muster-in Roll

of the organization named above. Roll dated Providence R. I. Nov. 23, 1863.

Muster-in to date Nov. 23, 1863.

Joined for duty and enrolled:

When Nov. 2, 1863.

Where Providence R. I.

Period 3 years.

Valuation of horse, $ 100

Valuation of horse equipments, $ 100

Remarks: Residence Providence R. I.

* This organization subsequently became Co. K, 11 Reg't U. S. Colored Heavy Artillery.

Book mark:

Perry

Copyist.

G. | 11 H. Art'y. | U.S.C.T.

Daniel A. Gardner

Pvt., Co. H, 14 Reg't R. I. Col'd H. Art'y.*

Appears on

Company Muster Roll

for 23 Nov. to 31 Dec, 1863.

Present or absent Present

Stoppage, $ 100 for

Due Gov't, $ 100 for

Valuation of horse, $ 100

Valuation of horse equipments, $ 100

Remarks:

*This organization subsequently became Co. H, 11 Reg't U. S. Colored Heavy Artillery.

Book mark:

Perry

Copyist.

G | 11 H. Art'y. | U.S.C.T.

Daniel A. Gardiner

Pvt., Co. H, 14 Reg't R. I. Col'd H. Art'y.*

Appears on

Company Muster Roll

for Jan. & Feb, 1864.

Present or absent Present

Stoppage, $ 100 for

Due Gov't, $ 100 for

Valuation of horse, $ 100

Valuation of horse equipments, $ 100

Remarks:

*This organization subsequently became Co. H, 11 Reg't U. S. Colored Heavy Artillery.

Book mark:

Perry

(358) *Copyist.*

G. | 11 H. Art'y. | U.S.C.T.

Daniel A. Gardiner

Corpl., Co. H, 14 Reg't R. I. Col'd H. Art'y.*

Appears on

Company Muster Roll

for Mch. & Apl, 1864.

Present or absent Present

Stoppage, $ 100 for

Due Gov't, $ 100 for

Valuation of horse, $ 100

Valuation of horse equipments, $ 100

Remarks: Appointed Mar. Mar. 13, per S. O. No. 12, On daily duty in Qr. Mr's Dep't

*This organization subsequently became Co. H, 11 U. S. Col'd H. Art'y

Book mark:

Perry

(358) Copyist.

G | **11 H. Art'y.** | **U.S.C.T.**

Daniel A. Gardiner

Corpl, Co. K, 8 Reg't U. S. Col'd H. Art'y.*

Appears on

Company Muster Roll

for May & June, 1864.

Present or absent Present

Stoppage, $ 100 for

Due Gov't, $ 100 for

Valuation of horse, $ 100

Valuation of horse equipments, $ 100

Remarks: Appointed Mar. 13, 64 per S. O. No. 12, On daily duty in Qr. Mr's Dept

† This organization subsequently became Co. H, 11 Reg't U. S. Colored Heavy Artillery.

Book mark:

Perry

Copyist.

G | 11 H. Art'y. | U.S.C.T.

Daniel A. Gardiner

Corpl, Co. H, 11 Reg't U. S. Col'd H. Art'y.

Appears on

Company Muster Roll

for July & Aug., 1864.

Present or absent Present

Stoppage, $ 100 for

Due Gov't, $ 100 for

Valuation of horse, $ 100

Valuation of horse equipments, $ 100

Remarks: Appointed May 12/64 per Special Order No. 12. Stop for Haversack 40 Issued April 19, 1864.

Book mark:

W. A. Taylor,

(358) *Copyist.*

G | 11 H. Art'y. | U.S.C.T.

Daniel A Gardiner

Capt'l, Co. H, 11 Reg't U. S. Col'd H. Art'y.

Appears on

Company Muster Roll

for Dated Oct 31, 1864.

Present or absent Present

Stoppage, $ 100 for

Due Gov't, $ 100 for

Valuation of horse, $ 100

Valuation of horse equipments, $ 100

Remarks: Appointed May 13/64
per S.O. #12, Hdqrs for
Haversack & Canteen
Issued Apr. 19, 1861

Book mark:

W A Tyler

(358) *Copyist.*

G | 11 H. Art'y. | U.S.C.T.

Daniel A. Gardiner

Corp'l, Co. H, 11 Reg't U. S. Col'd H. Art'y.

Appears on

Company Muster Roll

for Nov & Dec, 186 4.

Present or absent Present

Stoppage, $ 100 for

Due Gov't, $ 100 for

Valuation of horse, $ 100

Valuation of horse equipments, $ 100

Remarks: Appointed (May 13/64 per S. O. #12, Stop for Haversack 45.

Book mark:

W A Tyler

(358) *Copyist.*

G | 11 H. Art'y. | U.S.C.T.

Daniel A. Gardiner

Corp'l, Co. H, 11 Reg't U. S. Col'd H. Art'y.

Appears on

Company Muster Roll

for Jan & Feb, 1863.

Present or absent Present

Stoppage, $ 100 for

Due Gov't, $ 100 for

Valuation of horse, $ 100

Valuation of horse equipments, $ 100

Remarks: Stoppage for Canteen

4 3

Book mark:

W A Tyler

(358) *Copyist.*

G | 11 H. Art'y. | U.S.C.T.

Daniel A. Gardiner

Corp'l, Co. H, 11 Reg't U. S. Col'd H. Art'y.

Appears on

Company Muster Roll

for March & Apr, , 186 5.

Present or absent Present

Stoppage, $ 100 for

Due Gov't, $ 100 for

Valuation of horse, $ 100

Valuation of horse equipments, $ 100

Remarks:

Book mark:

Wm Taylor

(358) *Copyist.*

G. | 11 H. Art'y. | U.S.C.T.

Daniel A Gardner

Corp., Co. H, 11 Reg't U. S. Col'd H. Art'y.

Appears on

Company Muster Roll

for May and June, 1865.

Present or absent Present

Stoppage, $ 100 for

Due Gov't, $ 100 for

Valuation of horse, $ 100

Valuation of horse equipments, $ 100

Remarks:

Book mark:

Phillips

(358) *Copyist.*

G. | 11 H. Art'y. | U.S.C.T.

Daniel A. Gardener

Corp., Co. H, 11 Reg't U. S. Col'd H. Art'y.

Appears on

Company Muster Roll

for July and Aug, 186 .

Present or absent Present

Stoppage, $ 100 for

Due Gov't, $ 100 for

Valuation of horse, $ 100

Valuation of horse equipments, $ 100

Remarks: Stop for 2 U.S. Knapsacks

12,

Book mark :

Phillips

(358) *Copyist.*

G. | 11 H. Art'y. | U.S.C.T.

Daniel A. Gardiner

Corpl, Co. H., 11 Reg't U. S. Col'd H. Art'y.

Appears on **Co. Muster-out Roll,** dated New Orleans La., Oct. 2, 1865.

Muster-out to date Oct. 2, 1865.

Last paid to June 30, 1865.

Clothing account:

Last settled ....., 186 ; drawn since $ 100

Due soldier $ ..... 100 ; due U. S. $ 12 70/100

Am't for cloth'g in kind or money adv'd $ 100

Due U. S. for arms, equipments, &c., $ 100

Bounty paid $ 00 100 ; due $ 100 00 100

Remarks: Joined at orig'l org'n. Priv't to May 30, 1864. Stop for musket and acc'ts retained $6. Stop for 2 great Coat straps lost 12 cts.

Book mark: Y 113 P 63, 70

R Hills

(361) *Copyist.*

Gardner Daniel A.

P, Co. 11 Reg't Mass Inf.

1 **Enclosures.**

Bed Cards	Final Statements
Burial Records	Furloughs or L. of A.
Certs. of Dis. for Discharge	Med. Certificates
C. M. Charges	Med. Des. Lists
Descriptive Lists	Orders
Discharge Certificates	Pris. of War Record
Enlistment Papers 1	Resignations

Other papers relating to—

Admission to Hosp'l	Furlough or L. of A.
Casualty Sheet	Med. Examination
Confinement	Misc. Information
Contracts	Pay or Clothing
Death or Effects	Personal Reports
Desertion	Rank
Discharge from Hosp'l	Transfer to Hosp'l
Discharge from Service	Transfer to V. R. C.
Duty	Transportation

DECLARATION OF RECRUIT.

I, Daniel A Gardiner desiring to VOLUNTEER as a Soldier in the *ARMY OF THE UNITED STATES*, for the term of three years do declare that I am 28 years and ——— months of age; that I have never been discharged from the United States service on account of disability or by sentence of a court martial, or by order, before the expiration of a term of enlistment; and I know of no impediment to my serving honestly and faithfully as a soldier for

Given at Providence
The 2 nd day of Nov 1863

Witness:
D Smith Jr
Daniel A Gardiner

Daniel A Gardiner
Volunteered at Providence
Private 2 Cavalry
By Lt Eagley
15th Regiment of Heavy
Dischargedʼ
enlistment; last served in Company
Regʼt of
18

JUL 11 1871 RECEIVED ADJUTANT-GENERAL'S OFFICE

CONSENT IN CASE OF MINOR.

I, ——— Do Certify that I am the ——— of ——— ; that the said ——— is ——— years of age; and I do hereby freely give my CONSENT to his volunteering as a SOLDIER in the ARMY OF THE UNITED STATES for the period of ———

Given at
The ——— day of ———

Witness

VOLUNTEER ENLISTMENT.

State of Rhode Island Town of

I, Daniel A. Gardner born in East Greenwich

in the State of R. I. aged 28 years, and by occupation a Laborer DO HEREBY ACKNOWLEDGE to have volunteered this 2nd day of Nov 1863 to serve as a SOLDIER in the ARMY OF THE UNITED STATES OF AMERICA, for the period of Three years, unless sooner discharged by proper authority: Do also agree to accept such bounty, pay, rations and clothing, as are, or may be, established, by law for volunteers. And I, Daniel A. Gardner do solemnly swear, that I will bear true faith and allegiance to the *United States of America*, and that I will serve them honestly and faithfully against all their enemies or opposers whomsoever; and that I will observe and obey the orders of the President of the United States, and the orders of the officers appointed over me, according to the Rules and Articles of War.

Sworn and Subscribed to, at Providence Daniel A. Gardner

this 2nd day of Nov 1863

BEFORE E. A. Wheeler Capt & Mustering Officer

I CERTIFY, ON HONOR, That I have carefully examined the above-named Volunteer, agreeable to the General Regulations of the Army, and that, in my opinion, he is free from all bodily defects and mental infirmity, which would, in any way, disqualify him from performing the duties of a soldier.

Johnson Landon M.D.

EXAMINING SURGEON.

I CERTIFY, ON HONOR, That I have minutely inspected the Volunteer, Daniel A. Gardner previously to his enlistment, and that he was entirely sober when enlisted; that to the best of my judgment and belief, he is of lawful age; and that, in accepting him as duly qualified to perform the duties of an able-bodied soldier, I have strictly observed the Regulations which govern the recruiting service. This soldier has Black *eyes* Black *hair*, Dark *complexion*, is 5 *feet*, 8 *inches high*.

(Negro)

14th *Regiment of* H. Artillery *Volunteers*,

RECRUITING OFFICER.

Wk., 11 U.S.Col'd H.A.Cy.

Smith, Smith

CARD NUMBERS.

1 6182200	26
2 6182346	27
3 6182497	28
4 6182659	29
5 6182776	30
6 6182907	31
7 6183047	32
8 6183173	33
9 6183285	34
10 6183394	35
11 6183502	36
12 6183608	37
13 6183715	38
14 9123812	39
15 9123964	40
16	41
17	42
18	43
19	44
20	45
21	46
22	47
23	48
24	49
25	50

Book Mark:

See also

G | 11 H. Art'y. | U.S.C.T.

Daniel R. Gardner

....., Co. A, 11 Reg't U. S. Col'd H. Art'y.

Appears on

Company Descriptive Book

of the organization named above.

DESCRIPTION.

Age 35 years; height 5 feet 4 3/4 inches.

Complexion Dk Mulatto

Eyes Dk Hazel; hair Blk

Where born Providence R.I.

Occupation Painter

ENLISTMENT.

When Aug 3, 1863.

Where Providence

By whom W H Helm; term 3 y'rs.

Remarks: .....

(3834) *Copyist.*

G | 11 H. Art'y. | U.S.C.T.

Daniel R. Gardner

....., Co. A, 11 Reg't U. S. Col'd H. Art'y.

Appears on

Company Descriptive Book

of the organization named above.

DESCRIPTION.

Age 34 years; height 5 feet 4 3/4 inches.

Complexion Dk Mulatto

Eyes Dk Hazel; hair Blk

Where born Providence R I

Occupation Painter

ENLISTMENT.

When Aug 3, 1863.

Where Providence

By whom W H Helme; term 3 y'rs.

Remarks:

(3830) Copyist.

G | 11 H. Art'y. | U.S.C.T.

Daniel R Gardner

Pvt., Co. A, 14 Reg't R. I. Col'd H. Art'y.*

Age 38 years.

Appears on

Company Muster-in Roll

of the organization named above. Roll dated Camp Smith near Providence R. I., Aug 28, 1863.

Muster-in to date Aug 28, 1863.

Joined for duty and enrolled:

When July 3, 1863.

Where Providence

Period 3 years.

Valuation of horse, $ 100

Valuation of horse equipments, $ 100

Remarks: 1st District

* This organization subsequently became Co. A, 11 Reg't U. S. Colored Heavy Artillery.

Book mark:

Prewitt

(356) Copyist.

G | 11 H. Art'y. | U.S.C.T.

Daniel R. Gardner

Pvt, Co. A, 14 Reg't R. I. Col'd H. Art'y.*

Appears on

Company Muster Roll

for Aug 28 to Dec 31, 1863.

Present or absent Present

Stoppage, $ 100 for

Due Gov't, $ 100 for

Valuation of horse, $ 100

Valuation of horse equipments, $ 100

Remarks:

*This organization subsequently became Co. A, 11 Reg't U. S. Colored Heavy Artillery.

Book mark:

Prewitt

(358) Copyist.

A | 11 H. Art'y. | U.S.C.T.

Daniel R. Gardner

Pvt., Co. A, 14 Reg't R. I. Col'd H. Art'y.*

Appears on

Company Muster Roll

for Jan & Feb, 1864.

Present or absent Present

Stoppage, $ 100 for

Due Gov't, $ 100 for

Valuation of horse, $ 100

Valuation of horse equipments, $ 100

Remarks:

*This organization subsequently became Co. A, 11 Reg't U. S. Colored Heavy Artillery.

Book mark:

Prewitt

(358) Copyist.

G | 11 H. Art'y. | U.S.C.T.

Daniel R Gardner

Prt, Co. A, 14 Reg't R. I. Col'd H. Art'y.*

Appears on

Company Muster Roll

for Mch & Apl, 1864.

Present or absent Present

Stoppage, $ 100 for

Due Gov't, $ 100 for

Valuation of horse, $ 100

Valuation of horse equipments, $ 100

Remarks:

*This organization subsequently became Co. A, 11 Reg't U. S. Colored Heavy Artillery.

Book mark:

Previtt

(358) Copyist.

L | **11 H. Art'y.** | **U.S.C.T.**

Pvt. Carl P. Gardner

Pvt., Co. L, 8 Reg't U. S. Col'd H. Art'y.*

Appears on

Company Muster Roll

for May & June, 1864.

Present or absent Present

Stoppage, $ 100 for

Due Gov't, $ 100 for

Valuation of horse, $ 100

Valuation of horse equipments, $ 100

Remarks:

† This organization subsequently became Co. M, 11 Reg't U. S. Colored Heavy Artillery.

Book mark:

Present

Q. | 11 H. Art'y. | U.S.C.T.

Daniel P. Gardner

R., Co. A, 11 Reg't U. S. Col'd H. Art'y.

Appears on

Company Muster Roll

for July & Aug., 1864.

Present or absent Present

Stoppage, $ 100 for

Due Gov't, $ 100 for

Valuation of horse, $ 100

Valuation of horse equipments, $ 100

Remarks:

Born April 19, 1861

Book mark:

B. F. Isaacs

(358) Copyist.

G. | 11 H. Art'y. | U.S.C.T.

Daniel R. Gardner

Pvt., Co. A, 11 Reg't U. S. Col'd H. Art'y.

Appears on

Company Muster Roll

for Sept. & Oct., 186 4.

Present or absent Present

Stoppage, $ 100 for

Due Gov't, $ 100 for

Valuation of horse, $ 100

Valuation of horse equipments, $ 100

Remarks:

Book mark:

(358)

Copyist.

C | 11 H. Art'y. | U.S.C.T.

Daniel P. Gardner

P.V., Co. A, 11 Reg't U. S. Col'd H. Art'y.

Appears on

Company Muster Roll

for Nov. & Dec., 1864.

Present or absent Present

Stoppage, $ 20/100 for Ordnance

& 2 93/100 " C. & Q. E.

Due Gov't, $ 00/100 for

Valuation of horse, $ 00/100

Valuation of horse equipments, $ 00/100

Remarks:

Book mark:

(358) Copyist.

G. | 11 H. Art'y. | U.S.C.T.

Daniel R. Gardner

R., Co. A, 11 Reg't U. S. Col'd H. Art'y.

Appears on

Company Muster Roll

for Jan., & Feb., 1865.

Present or absent Present

Stoppage, $ 20/100 for Advance

$2.93 " C. & Q. R.

Due Gov't, $ 100 for

Valuation of horse, $ 100

Valuation of horse equipments, $ 100

Remarks:

Book mark:

C. F. Clark

Copyist.

G. | 11 H. Art'y. | U.S.C.T.

Daniel R. Gardner

R., Co. A, 11 Reg't U. S. Col'd H. Art'y.

Appears on

Company Muster Roll

for Mar. & Apr., 1865.

Present or absent Present

Stoppage, $ 90/100 for Rations

$2.93 " C. & C. E.

Due Gov't, $ 00/100 for

Valuation of horse, $ 00/100

Valuation of horse equipments, $ 00/100

Remarks:

Book mark:

D. F. Kohl

(358) Copyist.

C. | 11 H. Art'y. | U.S.C.T.

Daniel R. Gardner,

Pvt., Co. A, 11 Reg't U. S. Col'd H. Art'y.

Appears on

Company Muster Roll

for May & June, 1865.

Present or absent Present.

Stoppage, $ 100 for

Due Gov't, $ 100 for

Valuation of horse, $ 100

Valuation of horse equipments, $ 100

Remarks:

Book mark:

D R Gardner

(358) Copyist.

G. | 11 H. Art'y. | U.S.C.T.

Daniel R. Gardner,

Pvte., Co. A, 11 Reg't U. S. Col'd H. Art'y.

Appears on

Company Muster Roll

for July & Aug. 1865.

Present or absent Present

Stoppage, $ 100 for

Due Gov't, $ 100 for

Valuation of horse, $ 100

Valuation of horse equipments, $ 100

Remarks:

Book **mark**:

R. Brannen

(358) Copyist.

S. | 11 H. Art'y. | U.S.C.T.

Daniel T. Gardner,

Pvt., Co. A, 11 Reg't U. S. Col'd H. Art'y.

Appears on **Co. Muster-out Roll,** dated

New Orleans, La., Oct. 2, 1865.

Muster-out to date Oct. 2, 1865.

Last paid to Feb. 28, 1865.

Clothing account:

Last settled ....., 186 ; drawn since $ 100

Due soldier $ 24.54 100; due U. S. $ 100

Am't for cloth'g in kind or money adv'd $ 100

Due U. S. for arms, equipments, &c., $ 6.00 100

" " " " " " 3.50

Bounty paid $ ..... 100; due $ 100.00 100

Remarks: Joined Co'd. Org'n.

Stopped 1 Bedsack.

Stopped for 1 Mattress

Accounts retained.

Book mark:

F. W. Seaman

(361) *Copyist.*

Co. K, 11 U.S.Col'd H. Art'y.

Ernest Green

CARD NUMBERS.

1 6181345	26
2 6181393	27
3 6193771	28
4 6193902	29
5 6194026	30
6 6194134	31
7 9125288	32
8	33
9	34
10	35
11	36
12	37
13	38
14	39
15	40
16	41
17	42
18	43
19	44
20	45
21	46
22	47
23	48
24	49
25	50

Book Mark:

See also

MAR1238

S813192.R070

S120801.3 R0.....

S120764G 0.0.0 KK

S120766G 0.0.0 KK

J B Dowd
Ex

G | 11 H. Art'y. | U. S. C. T.

Dwight Gardner

Recruit, Co. G, 11 Reg't U. S. Col'd H. Art'y.

Appears on

Company Descriptive Book

of the organization named above.

DESCRIPTION.

Age 22 years; height 5 feet 8 inches.

Complexion Blk.

Eyes Blk.; hair Dark.

Where born Conn.

Occupation Tailor.

ENLISTMENT.

When Feb. 7, 1865.

Where Prov. R. I.

By whom A. B. Chadsey; term 3 y'rs.

Remarks: Joined April 14, 1865.
Received $100 bounty.

O. J. Markle,

(383g) *Copyist.*

L | 11 H. Art'y. | U.S.C.T.

Dwight Gardner

Appears with rank of Prt on

Muster and Descriptive Roll of a Detachment of U. S. Vols. forwarded

for the 11 Reg't H. Art'y. Roll dated

Providence R. I., Feb 10, 1865.

Where born Connecticut

Age 22 y'rs; occupation Sailor

When enlisted Feb 7, 1865.

Where enlisted Prov. R. I.

For what period enlisted 3 years.

Eyes Blk; hair Blk

Complexion dark; height 5 ft. 6 in.

When mustered in Feb 7, 1865.

Where mustered in Prov. R. I.

Bounty paid $100.00; due $200.00

Where credited State R. I. at large

Company to which assigned

Remarks: Recruit, entitled to bounty

Book mark:

(339) Copyist.

E. | 11 H. Art'y. | U.S.C.T.

Dwight Gardner

Appears with rank of Pvt on

Muster and Descriptive Roll of a Detachment of U. S. Vols. forwarded

for the 11 Reg't U.S. H. Art'y. Roll dated

New Haven Conn, May 7, 1865.

Where born Connecticut

Age 22 y'rs; occupation Sailor

When enlisted Feb 7, 1865.

Where enlisted Providence R.I.

For what period enlisted 3 years.

Eyes Blk; hair Blk

Complexion dark; height 5 ft. 6 in.

When mustered in Feb 7, 1865.

Where mustered in Providence R.I.

Bounty paid $ 100 00; due $ 00

Where credited State R.I. at large

Company to which assigned

Remarks:

Book mark:

Allen

(339) Copyist.

G. | 11 H. Art'y. | U.S.C.T.

Dwight Gardner.

Priv., Co. G, 11 Reg't U. S. Col'd H. Art'y.

Appears on

Company Muster Roll

for Mar. & Apr., 1863.

Present or absent Present.

Stoppage, $ 100 for

Due Gov't, $ 100 for

Valuation of horse, $ 100

Valuation of horse equipments, $ 100

Remarks: Joined a recruit.
April 14, 1865.

Book mark:

Sitler.

(858) Copyist.

G | 11 H. Art'y. | U.S.C.T.

Dwight Gardner

Pvt., Co. G, 11 Reg't U. S. Col'd H. Art'y.

Appears on

Company Muster Roll

for May & June, 186 5.

Present or absent Present

Stoppage, $ 100 for

Due Gov't, $ 100 for

Valuation of horse, $ 100

Valuation of horse equipments, $ 100

Remarks:

Book mark:

Laurence

(358) Copyist.

G | 11 H. Art'y. | U.S.C.T.

Dwight Gardner

Pvt., Co. G, 11 Reg't U. S. Col'd H. Art'y.

Appears on

Company Muster Roll

for dated Aug 31, 186 5.

Present or absent Present

Stoppage, $ 100 for

Due Gov't, $ 100 for

Valuation of horse, $ 100

Valuation of horse equipments, $ 100

Remarks:

Book mark:

Laurence

Copyist.

G | 11 H. Art'y. | U.S.C.T.

Dwight Gardner

Pvt., Co. G, 11 Reg't U. S. Col'd H. Art'y.

Appears on **Co. Muster-out Roll,** dated New Orleans La, Oct 2, 1865.

Muster-out to date Oct 2, 1865.

Last paid to June 30, 1865.

Clothing account:

Last settled ....., 186 ; drawn since $ 100

Due soldier $ ..... 100; due U. S. $ 5 06/100

Am't for cloth'g in kind or money adv'd $ 100

Due U. S. for arms, equipments, &c., $ 36/100

Bounty paid $ 100 100; due $ 100

Remarks: Joined as Recruit
Clothing for 1 Sabre Drawn 1
Watch 1 Shoe Knife

Book mark: .....

Examined

(361) *Copyist.*

Gardner, Dwight,

_____, _____, 11 Reg't U.S.C.H.A.,

2 Enclosures.

Bed Cards	Final Statements
Burial Records	Furloughs or L. of A
Certs. of Dis. for Discharge	Med. Certificates
C. M. Charges	Med. Des. Lists
Descriptive Lists	Orders
Discharge Certificates	Pris. of War Record
Enlistment Papers 2	Resignations

Other papers relating to—

Admission to Hosp'l	Furlough or L. of A
Casualty Sheet	Med. Examination
Confinement	Misc. Information
Contracts	Pay or Clothing
Death or Effects	Personal Reports
Desertion	Rank
Discharge from Hosp'l	Transfer to Hosp'l
Discharge from Service	Transfer to V. R. C.
Duty	Transportation

DECLARATION OF RECRUIT.

I, Dwight Gardner, desiring to VOLUNTEER as a Soldier in the **Army of the United States**, for the term of THREE YEARS, **Do Declare**, That I am 22 years and ..... months of age; that I have never been discharged from the United States service on account of disability or by sentence of a court martial, or by order before the expiration of a term of enlistment; and I know of no impediment to my serving honestly and faithfully as a soldier for three years.

GIVEN at Amherst NS

the 7th day of July 1865

Witness:

C J Wheelan

his
Dwight × Gardner
mark

11th U. S. Cold Artillery.

No. 189

Dwight Gardner

Volunteered at Amherst

Town

By Capt Wright Co

Eleventh Regiment of U.S. Cold Artillery

1st enlistment; last served in Company ( )

Reg't of .....

Discharged .....

18

Credits to the State of
P.O. at Cape

JUL 11

NOTE 1.—This blank will be used for both enlistments and re-enlistments—enlistment of veterans, &c., &c., in the volunteer service. They will be made out in duplicate in all cases—one to accompany the recruiting return of the superintendent (not the recruiting officer) to the Adjutant General, and one to accompany the accounts of the officer who pays bounty, &c. The Regiment and Company in which the soldier last served should be given on the back.

NOTE 2.—An enlistment holds to service. A muster-in must, in all cases, precede payment of pay, bounty, pension, &c. A muster-in roll must, in all cases, be filed in the Adjutant General's Office as evidence of muster-in. The mustering officer, commissary, or assistant commissary of musters, as the case may be, will countersign both enlistments as having mustered the soldier into the service of the United States before either of them is given to the disbursing officer.

CONSENT IN CASE OF MINOR.

I, ..., DO CERTIFY, That I am the ..... of ..... ; that the said ..... is ..... years of age; and I do hereby freely give my CONSENT to his volunteering as a SOLDIER in the ARMY OF THE UNITED STATES for the period of THREE YEARS.

GIVEN at .....

the ..... day of .....

Witness:

.....

.....

(A. G. O. No. 74 & 76.)

VOLUNTEER ENLISTMENT.

STATE OF Rhode Island TOWN OF Providence

I, Dwight Gardner, born in ——— in the State of Conn, aged 22 years, and by occupation a Sailor, DO HEREBY ACKNOWLEDGE to have volunteered this 7th day of February, 1865, to serve as a ***Soldier*** in the **Army of the United States of America,** for the period of *THREE YEARS*, unless sooner discharged by proper authority: Do also agree to accept such bounty, pay, rations, and clothing, as are, or may be, established by law for volunteers. And I, Dwight Gardner, do solemnly swear, that I will bear true faith and allegiance to the ***United States of America,*** and that I will serve them honestly and faithfully against all their enemies or opposers whomsoever; and that I will observe and obey the orders of the President of the United States, and the orders of the officers appointed over me, according to the Rules and Articles of War.

Sworn and subscribed to, at Providence R.I. this 7th day of Feby, 1865, BEFORE Chas J. Sheffield Captain 7th Reg

his
Dwight × Gardner
mark

I CERTIFY, ON HONOR, That I have carefully examined the above-named Volunteer, agreeably to the General Regulations of the Army, and that, in my opinion, he is free from all bodily defects and mental infirmity, which would in any way disqualify him from performing the duties of a soldier.

J. H. Peckham
2d Dist. R.I.
EXAMINING SURGEON.

I CERTIFY, ON HONOR, That I have minutely inspected the Volunteer Dwight Gardner previously to his enlistment, and that he was entirely sober when enlisted; that, to the best of my judgment and belief, he is of lawful age; and that, in accepting him as duly qualified to perform the duties of an able-bodied soldier, I have strictly observed the Regulations which govern the recruiting service. This soldier has Black *eyes*, Black *hair*, Dark *complexion*, is 5 *feet* 8 *inches* high.

A. B. Chadsey
Capt 4th Regiment of Prov Mar *Volunteers,*
2d Dist R.I. RECRUITING OFFICER.

(A. G. O. No. 74 & 76.)

Mustered into the service of the United States, for three years or during the war, from date of enlistment, in Company E, Lieutenant 4th Regiment of U.S. Col'd Troops, on the 7th day of Feby, 1865, at Providence R.I.

C. B. Chadsey
Capt 4th Prov. Mar.
2d Dist R.I.

NOTE 1.—This blank will be used for both enlistments and re-enlistments—enlistment of veterans, &c., &c., in the volunteer service. They will be made out in duplicate in all cases—one to accompany the recruiting return of the superintendent (not the recruiting officer) to the Adjutant General, and one to accompany the accounts of the officer who pays bounty, &c. The Regiment and Company in which the soldier last served should be given on the back.

NOTE 2.—An enlistment holds to service. A muster-in must, in all cases, precede payment of pay, bounty, pension, &c. A muster-in roll must, in all cases, be filed in the Adjutant General's Office as evidence of muster-in. The mustering officer, commissary, or assistant commissary of musters, as the case may be, will countersign both enlistments as having mustered the soldier into the service of the United States before either of them is given to the disbursing officer.

DECLARATION OF RECRUIT.

I, Dwight Gardner, desiring to VOLUNTEER as a soldier in the **Army of the United States**, for the term of THREE YEARS, **Do Declare**, That I am 22 years and ——— months of age; that I have never been discharged from the United States service on account of disability or by sentence of a court martial, or by order before the expiration of a term of enlistment; and I know of no impediment to my serving honestly and faithfully as a soldier for three years.

GIVEN at Providence R.I.

the 7th day of Feby 1865

Witness:

C. J. Mullin

Dwight + Gardner
his
mark

Mustered in Feb 9 1865
No. 269
Dwight Gardner
Volunteered at Providence R.I.
February 7 1865,
By Capt C. J. Mullin
Eleventh Regiment of Cold Artillery

———

1st enlistment; last served in Co. ( )

Reg't of ———

Discharged ———, 18

Audited & the State of
R. I. Bounty
Paid
JUL 11 1871

CONSENT IN CASE OF MINOR.

I, ———, DO CERTIFY, That I am the ——— of ———; that the said ——— is ——— years of age; and I do hereby freely give my CONSENT to his volunteering as a SOLDIER in the ARMY OF THE UNITED STATES for the period of THREE YEARS.

GIVEN at ———

the ——— day of ———

Witness:

———

———

(A. G. O. No. 74 & 76.)

VOLUNTEER ENLISTMENT.

STATE OF Rhode Island TOWN OF Pawtucket

I, Dwight Gardner, born in —
in the State of Conn, aged 22 years,
and by occupation a Sailor, DO HEREBY ACKNOWLEDGE to have
volunteered this 7th day of July, 1863,
to serve as a **Soldier** in the **Army of the United States of America,** for
the period of *THREE YEARS*, unless sooner discharged by proper authority:
Do also agree to accept such bounty, pay, rations, and clothing, as are, or may be,
established by law for volunteers. And I, Dwight Gardner, do
solemnly swear, that I will bear true faith and allegiance to the ***United States of America,*** and that I will serve them honestly and faithfully against all
their enemies or opposers whomsoever; and that I will observe and obey the
orders of the President of the United States, and the orders of the officers
appointed over me, according to the Rules and Articles of War.

Sworn and subscribed to, at Pawtucket RI
this 7th day of July, 1863
BEFORE Chas J Wheeler Justice of the Peace

his
Dwight X Gardner
mark

I CERTIFY, ON HONOR, That I have carefully examined the above-named Volunteer, agreeably to the General Regulations of the Army, and that, in my opinion, he is free from all bodily defects and mental infirmity, which would in any way disqualify him from performing the duties of a soldier.

F. H. Peckham
2d Dist RI

EXAMINING SURGEON.

I CERTIFY, ON HONOR, That I have minutely inspected the Volunteer Dwight Gardner previously to his enlistment, and that he was entirely sober when enlisted; that, to the best of my judgment and belief, he is of lawful age; and that, in accepting him as duly qualified to perform the duties of an able-bodied soldier, I have strictly observed the Regulations which govern the recruiting service. This soldier has Black *eyes*, Black *hair*, Dark *complexion*, is 5 *feet* 8 *inches* high.

A. B. Chaffee
Capt 1st Regiment of Mass Volunteers,
2d Dist RI
RECRUITING OFFICER.

(A. G. O. No. 74 & 76.)

Mustered into the service of the United States, for three years or during the war, from date of enlistment, in Company Colonel's Regiment of U S Cav Volunteers, on the 7th day of July, 1863, at Pawtucket RI

A. B. Chaffee
Capt 1st Regt Mass Vol
2d Dist RI

MAR 12 '93

Co C, 11 U.S.Col'd H. Artly.

Pvt. Pvt.

CARD NUMBERS.

1 6181315	26
1 6181333	27
1 6186734	28
1 6186848	29
1 6186960	30
1 6187070	31
1 91244418	32
1	33
1	34
10	35
11	36
12	37
13	38
14	39
15	40
16	41
17	42
18	43
19	44
20	45
21	46
22	47
23	48
24	49
25	50

Book Mark:

See also

G | 11 H. Art'y. | U.S.C.T.

Erastus Gardner

_____, Co. C, 11 Reg't U. S. Col'd H. Art'y.

Appears on

Company Descriptive Book

of the organization named above.

DESCRIPTION.

Age 19 years; height 5 feet 5 inches.

Complexion Blk

Eyes Blk; hair Blk

Where born Providence R I

Occupation Seaman

ENLISTMENT.

When Jan 10, 1865.

Where Prov. R I

By whom A.B. Chadsey; term 1 y'rs.

Remarks: Joined Co Mch 3/65 Desd of 1st Musl Jan 10/65. Rec'd from U S $33 33 bounty.

James

(3830) *Copyist.*

G | 11 H. Art'y. | U.S.C.T.

Erastus Gardner

Appears with rank of Pvt on

Muster and Descriptive Roll of a Detachment of U. S. Vols. forwarded

for the 11 Reg't 11th H. Art'y. Roll dated

Providence R. I. Jany 17, 1865.

Where born Providence R. I.

Age 19 y'rs; occupation Farmer

When enlisted Jany 10, 1865.

Where enlisted Prov. R. I.

For what period enlisted 1 years.

Eyes Blue; hair Blue

Complexion Blue; height 5 ft. 5 in.

When mustered in Jany 10, 1865.

Where mustered in Prov. R. I.

Bounty paid $ 33 10/100; due $ 66 33/100

Where credited State R. I. at large

Company to which assigned

Remarks: Recruit entitled to bounty

Book mark:

Allen

(339) Copyist.

G | 11 H. Art'y. | U.S.C.T.

Erastus Gardner

Appears with rank of Pvt on

Muster and Descriptive Roll of a Detachment of U. S. Vols. forwarded

for the 11 Reg't U.S. Ht. Arty. Roll dated

New Haven Ct., Feb 9, 1865.

Where born Providence R. I.

Age 19 y'rs; occupation Seaman

When enlisted Jany 10, 1865.

Where enlisted Providence R. I.

For what period enlisted One years.

Eyes blk.; hair blk.

Complexion blk.; height 5 ft. 5 in.

When mustered in Jany 10, 1865.

Where mustered in Providence R. I.

Bounty paid $ 33 33/100; due $ 00/100

Where credited State R. I. at Large 2 Congl. Dist.

Company to which assigned

Remarks:

Book mark:

Copyist.

G | 11 Hvy | **U.S.C.T.**

Erastus Gardner

Pvt, Co. G, 11 Reg't U. S. Col'd

Appears on

Company Muster Roll

for Nov & Dec, 1865.

Present or absent Present

Stoppage, $ 100 for

Due Gov't, $ 100 for

Valuation of horse, $ 100

Valuation of horse equipments, $ 100

Remarks: Joined by assignment from Mar 3/65 fr S.O. No 6 Hd Qrs 11 U S C A H July 23/65

Book mark:

(358) Copyist.

G | 11 H. Art'y. | U.S.C.T.

Erastus Gardner

Pvt, Co. C, 11 Reg't U. S. Col'd H. Art'y.

Appears on

Company Muster Roll

for May and June, 1865.

Present or absent Present

Stoppage, $ 100 for

Due Gov't, $ 100 for

Valuation of horse, $ 100

Valuation of horse equipments, $ 100

Remarks: Joined by assignment March 3d 1865 Per S.O. No. 6. Hd. Qrs. 11 U.S.C.H.A. Febry 23d 1865.

Book mark:

Bliss

Copyist.

G | 11 H. Art'y. | U.S.C.T.

Erastus Gardner

Pvt, Co. C, 11 Reg't U. S. Col'd H. Art'y.

Appears on

Company Muster Roll

for July and Aug., 186 5.

Present or absent Present

Stoppage, $ 1.75/100 for C. and G. E

Due Gov't, $ 100 for

Valuation of horse, $ 100

Valuation of horse equipments, $ 100

Remarks: Joined by assign-
-ment March 3. 1865 per
S. O. No. 6. Hd. Qrs. 11th A.
S. C. A. H. Feby. 23. 1865

Book mark:

Bliss

(358) Copyist.

G | 11 H. Art'y. | U.S.C.T.

Erastus Gardner

Pvt., Co. C, 11 Reg't U. S. Col'd H. Art'y.

Appears on **Co. Muster-out Roll,** dated New Orleans La., Oct. 2, 1865.

Muster-out to date Oct. 2, 1865.

Last paid to Never ....., 186 .

Clothing account:

Last settled....., 186 ; drawn since $.....100

Due soldier $.....100; due U. S. $41 94/100

Am't for cloth'g in kind or money adv'd $.....100

Due U. S. for arms, equipments, &c., $.....100

Bounty paid $33 33/100; due $.....100

Remarks: Joined a Recruit
Stop for one musket and
Acct. returned. Stop for
Cap & Equipage Articles
unknown 1 75

Book mark: .....

Bliss

(861) *Copyist.*

Gardner, Ernest

_____, _____, 11 Reg't. U.S.C.H.A.

2 **Enclosures.**

Bed Cards	Final Statements
Burial Records	Furloughs or L. of A
Certs. of Dis. for Discharge	Med. Certificates
C. M. Charges	Med. Des. Lists
Descriptive Lists	Orders
Discharge Certificates	Pris. of War Record
Enlistment Papers 2	Resignations

Other papers relating to—

Admission to Hosp'l	Furlough or L. of A
Casualty Sheet	Med. Examination
Confinement	Misc. Information
Contracts	Pay or Clothing
Death or Effects	Personal Reports
Desertion	Rank
Discharge from Hosp'l	Transfer to Hosp'l
Discharge from Service	Transfer to V. R. C.
Duty	Transportation

DECLARATION OF RECRUIT.

I, Erastus Gardner, desiring to VOLUNTEER as a Soldier in the **Army of the United States**, for the term of ~~THREE~~ one YEARS, **Do Declare**, That I am Nineteen years and ..... months of age; that I have never been discharged from the United States service on account of disability or by sentence of a court martial, or by order before the expiration of a term of enlistment; and I know of no impediment to my serving honestly and faithfully as a soldier for ~~three~~ one years.

GIVEN at Providence R.I.

the 10th day of January 1865

Witness:

C J Wheeler

his
Erastus X Gardner
mark

Enlisted in Company ( ) No. 2 Reg. Art. (Col'd.)

Erastus Gardner

Volunteered at Providence R.I. to serve one year

January 10th, 1865

By Capt S P Colwell

Colonel Commanding Regiment of U.S. Col'd Troops

enlistment; last served in Company ( )

Reg't of .....

Discharged .....

18 .

Credited to the State of

R. I. at Large.

Adjt. Gen.

CONSENT IN CASE OF MINOR.

I, ..., DO CERTIFY, That I am the ..... of ..... ; that the said ..... is ..... years of age; and I do hereby freely give my CONSENT to his volunteering as a SOLDIER in the ARMY OF THE UNITED STATES for the period of THREE YEARS.

GIVEN at .....

the ..... day of .....

Witness:

.....

.....

NOTE 1.—This blank will be used for both enlistments and re-enlistments—enlistment of veterans, &c., &c., in the volunteer service. They will be made out in duplicate in all cases—one to accompany the recruiting return of the superintendent (not the recruiting officer) to the Adjutant General, and one to accompany the accounts of the officer who pays bounty, &c. The Regiment and Company in which the soldier last served should be given on the back.

NOTE 2.—An enlistment holds to service. A muster-in must, in all cases, precede payment of pay, bounty, pension, &c. A muster-in roll must, in all cases, be filed in the Adjutant General's Office as evidence of muster-in. The mustering officer, commissary, or assistant commissary of musters, as the case may be, will countersign both enlistments as having mustered the soldier into the service of the United States before either of them is given to the disbursing officer.

(A. G. O. No. 74 & 76.)

VOLUNTEER ENLISTMENT.

STATE OF Rhode Island TOWN OF Providence

I, Eustus Gardner (Colr'd), born in Providence in the State of R.I., aged 19 years, and by occupation a Teamer, DO HEREBY ACKNOWLEDGE to have volunteered this 10th day of Jan'y, 1865, to serve as a **Soldier** in the **Army of the United States of America,** for the period of ~~THREE~~ one YEARS, unless sooner discharged by proper authority: Do also agree to accept such bounty, pay, rations, and clothing, as are, or may be, established by law for volunteers. And I, Eustus Gardner, do solemnly swear, that I will bear true faith and allegiance to the ***United States of America,*** and that I will serve them honestly and faithfully against all their enemies or opposers whomsoever; and that I will observe and obey the orders of the President of the United States, and the orders of the officers appointed over me, according to the Rules and Articles of War.

Sworn and subscribed to, at Providence R.I. this 10th day of Jan'y, 1865, BEFORE Chas J. Wheeler Justice of the Peace

his
Eustus X Gardner (Colr'd)
mark

I CERTIFY, ON HONOR, That I have carefully examined the above-named Volunteer, agreeably to the General Regulations of the Army, and that, in my opinion, he is free from all bodily defects and mental infirmity, which would in any way disqualify him from performing the duties of a soldier.

F. H. Peckham
M Dept R.I.
EXAMINING SURGEON.

I CERTIFY, ON HONOR, That I have minutely inspected the Volunteer Eustus Gardner previously to his enlistment, and that he was entirely sober when enlisted; that, to the best of my judgment and belief, he is of lawful age; and that, in accepting him as duly qualified to perform the duties of an able-bodied soldier, I have strictly observed the Regulations which govern the recruiting service. This soldier has Black eyes, Black hair, Black complexion, is 5 feet 5 inches high.

A.B. Chaffee
Capt Regiment of Pov May, Volunteers,
2d Dist R.I., ~~RECRUITING OFFICER.~~

(A. G. O. No. 74 & 76.)

Mustered into the service of the United States, for ~~three~~ one year or during the war, from date of enlistment, in Company ____, ____ Regiment of Light Artillery Volunteers, on the 11th day of Jan'y, 1865, at Providence R.I.

C.B. Chaffee
Capt 1st Pov May
2d Dist R.I.

NOTE 1.—This blank will be used for both enlistments and re-enlistments—enlistment of veterans, &c., &c., in the volunteer service. They will be made out in duplicate in all cases—one to accompany the recruiting return of the superintendent (not the recruiting officer) to the Adjutant General, and one to accompany the accounts of the officer who pays bounty, &c. The Regiment and Company in which the soldier last served should be given on the back.

NOTE 2.—An enlistment holds to service. A muster-in must, in all cases, precede payment of pay, bounty, pension, &c. A muster-in roll must be filed in the Adjutant General's Office as evidence of muster-in. The mustering officer, commissary, or assistant commissary of musters, as the case may be, must certify both enlistments as having mustered the soldier into the service of the United States before either of them is given to the disbursing officer.

DECLARATION OF RECRUIT.

I, Charles Gardner, desiring to VOLUNTEER as a Soldier in the **Army of the United States**, for the term of ~~THREE~~ one YEARS, **Do Declare**, That I am nineteen years and ..... months of age; that I have never been discharged from the United States service on account of disability or by sentence of a court martial, or by order before the expiration of a term of enlistment; and I know of no impediment to my serving honestly and faithfully as a soldier for ~~three~~ one years.

GIVEN at Brandon Vt

the 10th day of January 1861

Witness:

C J Wheeler

Charles Gardner
mark

No. 124

Charles Gardner

Volunteered at Brandon Vt

January 10 1861

By Capt C Wheeler

To serve in the Co A 1st Regiment of Vt Militia

enlistment; last served in Company ( )

Reg't of .....

Discharged .....

....., 18 .

Enlisted & the 124

Recruit & the Captain

Rec'd at Camp

[illegible]

JUL 11 1861

CONSENT IN CASE OF MINOR.

I, ..., DO CERTIFY, That I am the ..... of ....., ; that the said ..... is ..... years of age; and I do hereby freely give my CONSENT to his volunteering as a SOLDIER in the ARMY OF THE UNITED STATES for the period of THREE YEARS.

GIVEN at .....

the ..... day of .....

Witness:

.....

.....

(A. G. O. No. 74 & 76.)

VOLUNTEER ENLISTMENT.

STATE OF Rhode Island TOWN OF Bristol

I, Easton Gardner, born in Bristol in the State of RI, aged 19 years, and by occupation a Seamen, DO HEREBY ACKNOWLEDGE to have volunteered this 10th day of January, 1865, to serve as a ~~Soldier~~ Sailor in the **Army of the United States of America,** for the period of ~~THREE YEARS~~, unless sooner discharged by proper authority: Do also agree to accept such bounty, pay, rations, and clothing, as are, or may be, established by law for volunteers. And I, Easton Gardner, do solemnly swear, that I will bear true faith and allegiance to the ***United States of America,*** and that I will serve them honestly and faithfully against all their enemies or opposers whomsoever; and that I will observe and obey the orders of the President of the United States, and the orders of the officers appointed over me, according to the Rules and Articles of War.

Sworn and subscribed to, at Bristol RI this 10th day of January, 1865, BEFORE Chas J Wheeler Justice of the Peace

his
Easton × Gardner
mark

I CERTIFY, ON HONOR, That I have carefully examined the above-named Volunteer, agreeably to the General Regulations of the Army, and that, in my opinion, he is free from all bodily defects and mental infirmity, which would in any way disqualify him from performing the duties of a soldier.

F. H. P. Sherman
M. Dist R. I.
EXAMINING SURGEON.

I CERTIFY, ON HONOR, That I have minutely inspected the Volunteer Easton Gardner previously to his enlistment, and that he was entirely sober when enlisted; that, to the best of my judgment and belief, he is of lawful age; and that, in accepting him as duly qualified to perform the duties of an able-bodied soldier, I have strictly observed the Regulations which govern the recruiting service. This soldier has Black *eyes,* Black *hair,* Black *complexion,* is 5 *feet* 5 *inches* high.

A. B. Chadsey
Capt 4th Regt R.I. Volunteers,
2 Dist RI
~~RECRUITING OFFICER.~~

(A. G. O. No. 74 & 76.)

Mustered into the service of the United States, for ~~three~~ one years or during the war, from date of enlistment, in Company ____ Regiment of Rhode Island Volunteers, on the 10th day of January, 1865, at Bristol RI

A. B. Chadsey
Capt 4th Regt R.I. Volunteers
2 Dist RI

[illegible]

[illegible], 11 U.S.Col'd Inf'y.

Co. "[illegible]"

CARD NUMBERS.

1	6181261	26	
2	6181269	27	
3	6181640	28	
4	5467584	29	
5	6180083	30	
6	6180217	31	
7	6180537	32	
8	6182452	33	
9	6180580	34	
10	6180725	35	
11	6180835	36	
12	9124573	37	
13	9124821	38	
14		39	
15		40	
16		41	
17		42	
18		43	
19		44	
20		45	
21		46	
22		47	
23		48	
24		49	
25		50	

Book Mark:

See also

G | 11 H. Art'y. | U.S.C.T.

George E. Gardner

, Co. L, 11 Reg't U. S. Col'd H. Art'y.

Appears on

Company Descriptive Book

of the organization named above.

DESCRIPTION.

Age 21 years; height 5 feet 5 inches.

Complexion Dark.

Eyes Dark; hair Dark.

Where born Swanzey, Mass.

Occupation Laborer.

ENLISTMENT.

When Aug. 18, 1864.

Where Providence

By whom Wm. E. Hamlin; term 1 y'rs.

Remarks: Recruit Volunteer. Mustered
same date, place & person as Enlist-
ment. Clothing drawn $17.43.
Bounty drawn $33 33/100 due $66 66/100.
Discharged Expiration of Service
Aug. 18, 1865. Discha'g & Final
Statements given Aug. 18, 1865.

O. J. Markle,

(3567) Copyist.

G | **11** H. Art'y. | **U.S.C.T.**

George O. Gardner

_____, Co. D, 11 Reg't U. S. Col'd H. Art'y.

Appears on

Company Descriptive Book

of the organization named above.

DESCRIPTION.

Age 21 years; height 5 feet 6 inches.

Complexion Dark.

Eyes Dark; hair Dark.

Where born Swanzey, Mass.

Occupation Laborer.

ENLISTMENT.

When Aug. 18, 1864.

Where Prov., R. I.

By whom W. E. Hamlin; term 1 y'rs.

Remarks: Volunteer Recruit Bounty drawn $33.33 Due $66.66. Discharged at Brashear, La. Aug. 18, 1865 by reason of Expiration of his Term of Service. Disch'g and Final Statements given. Clothing drawn since Enlistment $

O. J. Markle,

(383y) Copyist.

f | 11 H. A. | U.S.C.T.

Geo E Gardner

(8th Regt)

Pvt, Co. , 11 Reg't U. S. Col'd H.A.

Appears on a

Detachment Muster Roll

of the organization named above

for July & Aug, 186 4.

Station New Haven Conn

Present or absent Present

Stoppage, $ 100 for

Due Gov't, $ 100 for

Valuation of horse, $ 100

Valuation of horse equipments, $ 100

Remarks:

Book mark:

H W Ewell

(844) *Copyist.*

C.	11 N. Arty. U.S.C.T. / 8 N.Y. Arty	**U.S.C.T.**

George E. Gardner

Pvt, Co. —, & Reg't U. S. Col'd N.Y. Arty

Appears on a

Detachment Muster Roll

of the organization named above

for July & Aug, 1864.

Station New Haven Conn

Present or absent Not stated

Stoppage, $ 100 for

Due Gov't, $ 100 for

Valuation of horse, $ 100

Valuation of horse equipments, $ 100

Remarks:

Book mark:

J. J. Kearney

(344) Copyist.

G | 11 H. Art'y. | U.S.C.T.

George E. Gardner

Appears with rank of Pvt on

Muster and Descriptive Roll of a Detachment of U. S. Vols. forwarded

for the 11 Reg't (& 8 Col'd Hvy Art'y) N.S. C. H. Art'y Roll dated

Providence R. I, Aug 19, 1864.

Where born Swanzey Mass

Age 21 y'rs; occupation Laborer

When enlisted Aug 18, 1864.

Where enlisted Providence R. I.

For what period enlisted 1 years.

Eyes dark; hair dark

Complexion dark; height 5 ft. 5 in.

When mustered in Aug 18, 1864.

Where mustered in Providence R. I.

Bounty paid $33 33/100; due $66 66/100

Where credited Town Warren R. I.

Company to which assigned

Remarks: Recruit entitled to bounty

× Subsequently became 14 N.S. C. H. Art'y

Book mark:

Copyist.

E | 11 H. Art'y. | U.S.C.T.

Geo. E. Gardner

Appears with rank of Pvt on

Muster and Descriptive Roll of a Detachment of U. S. Vols. forwarded

for the 11 Reg't H. Art'y. Roll dated

New Haven Conn. Sep. 25, 1864.

Where born Swansey Mass.

Age 21 y'rs; occupation Laborer

When enlisted Aug 16, 1864.

Where enlisted Providence R. I.

For what period enlisted One years.

Eyes dark; hair dark

Complexion dark; height 5 ft. 5 in.

When mustered in Aug 18, 1864.

Where mustered in Providence R. I.

Bounty paid $ 33 33/100; due $ 66 66/100

Where credited Warren R. I. 1st Cavl Dist

Company to which assigned

Remarks: Recruit

Book mark:

Allen

(339) Copyist.

G | 11 H. Art'y. | U.S.C.T.

Geo. E. Gardner

Pvt., Co. D, 11 Reg't U. S. Col'd H. Art'y.

Appears on

Company Muster Roll

for Sept 1st, 186 4.

Present or absent Present

Stoppage, $.....100 for .....

.....

.....

Due Gov't, $.....100 for .....

.....

.....

Valuation of horse, $.....100

Valuation of horse equipments, $.....100

Remarks: Joined Co
Oct 18/64

.....

.....

.....

.....

.....

.....

.....

.....

Book mark: .....

Biddle

(358) *Copyist.*

G | 11 H. Art'y. | U.S.C.T.

George E. Gardner

Pvt., Co. D, 11 Reg't U. S. Col'd H. Art'y.

Appears on

Company Muster Roll

for Nov. & Dec., 1864.

Present or absent Present

Stoppage, $.....100 for .....

.....

Due Gov't, $.....100 for .....

.....

Valuation of horse, $.....100

Valuation of horse equipments, $.....100

Remarks: Joined Co. Oct. 8 1864 - Free April 19, 1865.

.....

.....

.....

.....

.....

.....

Book mark: .....

Bogan

(358) *Copyist.*

G | 11 H. Art'y. | U.S.C.T.

George E. Gardner

Sri., Co. D, 11 Reg't U. S. Col'd H. Art'y.

Appears on

Company Muster Roll

for Jan. & Feb., 1865.

Present or absent Present

Stoppage, $.....100 for .....

.....

Due Gov't, $.....100 for .....

.....

Valuation of horse, $.....100

Valuation of horse equipments, $.....100

Remarks Fro April 19, 1861

.....

.....

.....

.....

.....

.....

.....

.....

Book mark: .....

Grogan

(358) *Copyist.*

G | 11 H. Art'y. | U.S.C.T.

George E. Gardner

Pvt.; Co. D, 11 Reg't U. S. Col'd H. Art'y.

Appears on

Company Muster Roll

for March & April, 1865.

Present or absent Present

Stoppage, $ 100 for

Due Gov't, $ 100 for

Valuation of horse, $ 100

Valuation of horse equipments, $ 100

Remarks: Rec'd April 19, 1865

Book mark:

George

Copyist.

G | 11 H. Art'y. | U.S.C.T.

George E. Gardner

Pvt., Co. D, 11 Reg't U. S. Col'd H. Art'y.

Appears on

Company Muster Roll

for May & June, 1865.

Present or absent Present,

Stoppage, $ 05/100 for C. & G. E.

Due Gov't, $ 100 for

Valuation of horse, $ 100

Valuation of horse equipments, $ 100

Remarks:

Book mark:

C. F. Thompson,
Copyist.

G | 11 H.A. | U.S.C.T.

George E. Gardner

Pvt., Co. D, 11 Reg't U. S. Col'd H.A.

Appears on

Company Muster Roll

for July & Aug., 1865.

Present or absent.....

Stoppage, $.....100 for .....

.....

.....

Due Gov't, $.....100 for .....

.....

Valuation of horse, $.....100

Valuation of horse equipments, $.....100

Remarks: Dis'chg. & Final Statements Aug. 18" 1865 Expiration of Service, Bounty due. #66 66

.....

.....

.....

.....

.....

Book mark: .....

C. F. Thompson.

(358) Copyist.

G | 11 H. Art'y. | U.S.C.T.

George E. Gardner.

Pvt., Co. D, 11 Reg't U. S. Col'd H. Art'y.

Appears on **Co. Muster-out Roll,** dated New Orleans La, Oct 12, 1865.

Muster-out to date ....., 186 .

Last paid to ....., 186 .

Clothing account:

Last settled....., 186 ; drawn since $.....100

Due soldier $.....100; due U. S. $.....100

Am't for cloth'g in kind or money adv'd $.....100

Due U. S. for arms, equipments, &c., $.....100

Bounty paid $.....100; due $.....100

Remarks: Joined as Recruit
dis'chg'd at Brashear
La, Aug, 18, 1865
Expiration term of service,
Dec 18th, 1864

Book mark:

C F Thompson.

(361) *Copyist.*

11 Ha

Gardner. George E

9, Co. 8th Reg't U.S.H.A.

2 **Enclosures.**

Bed Cards	Final Statements
Burial Records	Furloughs or L. of A.
Certs. of Dis. for Discharge	Med. Certificates
C. M. Charges	Med. Des. Lists
Descriptive Lists	Orders
Discharge Certificates	Pris. of War Record
Enlistment Papers 2	Resignations

Other papers relating to—

Admission to Hosp'l	Furlough or L. of A.
Casualty Sheet	Med. Examination
Confinement	Misc. Information
Contracts	Pay or Clothing
Death or Effects	Personal Reports
Desertion	Rank
Discharge from Hosp'l	Transfer to Hosp'l
Discharge from Service	Transfer to V. R. C.
Duty	Transportation

NOTE 1.—This blank will be used for both enlistments and re-enlistments—enlistment of veterans, &c., &c., in the volunteer service. They will be made out in duplicate in all cases—one to accompany the recruiting return of the superintendent (not the recruiting officer) to the Adjutant General, and one to accompany the accounts of the officer who pays bounty, &c. The Regiment and Company in which the soldier last served should be given on the back.

NOTE 2.—An enlistment holds to service. A muster-in must, in all cases, precede payment of pay, bounty, pension, &c. A muster-in must, in all cases, be filed in the Adjutant General's Office as evidence of muster-in. The mustering officer, commissary, or assistant commissary of musters, as the case may be, will countersign both enlistments as having mustered the soldier into the service of the United States before either of them is given to the disbursing officer.

DECLARATION OF RECRUIT.

I, George E Gardner, desiring to VOLUNTEER as a Soldier in the Army of the United States, for the term of ~~three~~ one YEARS, Do Declare, That I am twenty one (21) years and ..... months of age; that I have never been discharged from the United States service on account of disability or by sentence of a court martial, or by order before the expiration of a term of enlistment; and I know of no impediment to my serving honestly and faithfully as a soldier for one years.

GIVEN at Providence R. I.

the 18th day of August 1864

Witness:

O Winsor

George E Gardner

Enlisted [illegible]
No. .....
George E. Gardner
Co. [illegible]
Volunteered at Providence
August 18 1864
To serve ..... years
By Capt Jno. C. Abbott
Co. B. 1st Regt. R.I. Cav.
(Corps)
(Co.) Regiment of [illegible]

Mustered
8th Nov
enlistment, last served in Company

Reg't of .....

Discharged .....

....., 18 .

JUL 11 1871

CONSENT IN CASE OF MINOR.

I, ..., DO CERTIFY, That I am the ..... of ..... ; that the said ..... is ..... years of age; and I do hereby freely give my CONSENT to his volunteering as a SOLDIER in the ARMY OF THE UNITED STATES for the period of THREE YEARS.

GIVEN at .....

the ..... day of .....

Witness:

.....

.....

(A. G. O. No. 74 & 76.)

VOLUNTEER ENLISTMENT.

STATE OF Rhode Island

TOWN OF Warren R.I. Providence

I, George E. Gardiner, born in Swanzey in the State of Massachusetts, aged Twenty one (21) years, and by occupation a Laborer, Do HEREBY ACKNOWLEDGE to have volunteered this Eighteenth (18th) day of August, 1864, to serve as a **Soldier** in the **Army of the United States of America**, for the period of **ONE YEARS**, unless sooner discharged by proper authority: Do also agree to accept such bounty, pay, rations, and clothing, as are, or may be, established by law for volunteers. And I, George E Gardiner, do solemnly swear, that I will bear true faith and allegiance to the **United States of America**, and that I will serve them honestly and faithfully against all their enemies or opposers whomsoever; and that I will observe and obey the orders of the President of the United States, and the orders of the officers appointed over me, according to the Rules and Articles of War.

Sworn and subscribed to, at Providence
this 18th day of August, 1864,
BEFORE Wm E Hamlin
Justice of the Peace

George E Gardiner

I CERTIFY, ON HONOR, That I have carefully examined the above-named Volunteer, agreeably to the General Regulations of the Army, and that, in my opinion, he is free from all bodily defects and mental infirmity, which would in any way disqualify him from performing the duties of a soldier.

C G McKnight
Surgeon Bd. Enrollment
1st Dist R.I. EXAMINING SURGEON.

I CERTIFY, ON HONOR, That I have minutely inspected the Volunteer George E. Gardner previously to his enlistment, and that he was entirely sober when enlisted; that, to the best of my judgment and belief, he is of lawful age; and that, in accepting him as duly qualified to perform the duties of an able-bodied soldier, I have strictly observed the Regulations which govern the recruiting service. This soldier has Dark *eyes*, Dark *hair*, Dark *complexion*, is 5 *feet* 5 *inches* high.

Wm E Hamlin
Capt Provost Marshal
1st Dist R.I. RECRUITING OFFICER.

(A. G. O. No. 74 & 76.)

Mustered into the service of the United States, for **ONE** years or during the war, from date of enlistment in Company E, 14th Regiment, 1864, at Providence R.I.
(Colored.)
(Infantry, the 14th Regt R. I. V.)
Wm E Hamlin
Capt & Pr. Marshal
Mustering Officer
1st Dist R.I.

DECLARATION OF RECRUIT.

I, George E Gardner, desiring

to VOLUNTEER as a Soldier in the **Army of the United States**, for the term of ~~THREE~~ one YEARS,

Do Declare, That I am Twenty one (21) years and ..... months

of age; that I have never been discharged from the United States service on account of disability or by sentence of a court martial, or by order before the expiration of a term of enlistment; and I know of no impediment to my serving honestly and faithfully as a soldier for one years.

GIVEN at Providence R I

the 18th day of August 1864

Witness:

O Mason

George E Gardner

8th R. I. V. (Colonel)

No. 10

George E Gardner

Volunteered at Providence R.I.

..... 18

Regiment 18

..... 1864,

By Capt. Wm E. Hamlin

(or Lt.) Comd'g

(or Lt.) Regiment of 8th R.I. Vol.

ONE YEAR.

..... enlistment; last served in Company ( )

..... Reg't of .....

Discharged .....

....., 18 .

JUN 11 1873

NOTE 1.—This blank will be used for both enlistments and re-enlistments—enlistment of veterans, &c., &c., in the volunteer service. They will be made out in duplicate in all cases—one to accompany the recruiting return of the superintendent (not the recruiting officer) to the Adjutant General, and one to accompany the accounts of the officer who pays bounty, &c. The Regiment and Company in which the soldier last served should be given on the back.

NOTE 2.—An enlistment holds to service. A muster-in must, in all cases, be filed in the Adjutant General's Office as evidence of muster-in. The mustering officer, commissary, or assistant commissary of musters, as the case may be, will countersign both enlistments as having mustered the soldier into the service of the United States before either of them is given to the disbursing officer.

CONSENT IN CASE OF MINOR.

I, ..., DO CERTIFY, That I am

the ..... of ..... ; that the

said ..... is ..... years of age; and I

do hereby freely give my CONSENT to his volunteering as a SOLDIER in the ARMY OF THE UNITED STATES for the period of THREE YEARS.

GIVEN at .....

the ..... day of .....

Witness:

.....

.....

(A. G. O. No. 74 & 76.)

VOLUNTEER ENLISTMENT.

STATE OF Rhode Island

TOWN OF Warren R.D. Coventry

I, George E Gardner, born in Swanzey in the State of Massachusetts, aged Twenty one 21 years, and by occupation a Laborer, DO HEREBY ACKNOWLEDGE to have volunteered this Eighteenth (18th) day of August, 1864, to serve as a **Soldier** in the **Army of the United States of America**, for the period of **ONE** YEARS, unless sooner discharged by proper authority: Do also agree to accept such bounty, pay, rations, and clothing, as are, or may be, established by law for volunteers. And I, Geo E Gardner, do solemnly swear, that I will bear true faith and allegiance to the ***United States of America***, and that I will serve them honestly and faithfully against all their enemies or opposers whomsoever; and that I will observe and obey the orders of the President of the United States, and the orders of the officers appointed over me, according to the Rules and Articles of War.

Sworn and subscribed to, at Providence this (18th) day of August, 1864, BEFORE Wm E Hamlen Justice of the Peace } George E Gardner

I CERTIFY, ON HONOR, That I have carefully examined the above-named Volunteer, agreeably to the General Regulations of the Army, and that, in my opinion, he is free from all bodily defects and mental infirmity, which would in any way disqualify him from performing the duties of a soldier.

O J McKnight
Surgeon Bd. Enrollment 1st Dist R.I. EXAMINING SURGEON.

I CERTIFY, ON HONOR, That I have minutely inspected the Volunteer George E. Gardner previously to his enlistment, and that he was entirely sober when enlisted; that, to the best of my judgment and belief, he is of lawful age; and that, in accepting him as duly qualified to perform the duties of an able-bodied soldier, I have strictly observed the Regulations which govern the recruiting service. This soldier has Dark *eyes*, Dark *hair*, Dark *complexion*, is 5 *feet* 5 *inches* high.

Wm E Hamlen
Capt 32nd Bn. Marshall Volunteers,
1st Dist R.I. RECRUITING OFFICER.

(A. G. O. No. 74 & 76.)

Mustered into the service of the United States, for ONE year or during the war, from date of enlistment in Company E, (Cook's) Regiment of Rhode Island U.S.A. Volunteers, on the 18th day of August, 1864, at Providence R.I.

Wm E Hamlen
Capt 32nd Bn. Marshall's Dist R.I.
Mustering Officer

MARCH 25

Name [illegible]

Co. [illegible], 11 U.S.Col'd H. Art'y.

Private Private

CARD NUMBERS.

1 6181334	26
2 6181321	27
3	28
4	29
5	30
6	31
7	32
8	33
9	34
10	35
11	36
12	37
13	38
14	39
15	40
16	41
17	42
18	43
19	44
20	45
21	46
22	47
23	48
24	49
25	50

Book Mark:

See also

C | 11 H. Art'y. | U.S.C.T.

Henry Faulner

Appears with rank of Pvt on

Muster and Descriptive Roll of a Detachment of U. S. Vols. forwarded

for the 11 Reg't U.S.C.H. Arty Roll dated

New Haven Conn Feb 9, 1865.

Where born Warren R.I.

Age 21 y'rs; occupation Farmer

When enlisted Jany 19, 1865.

Where enlisted Providence

For what period enlisted 3 years.

Eyes Blk; hair Blk

Complexion Blk; height 5 ft. 5 in.

When mustered in Jany 19, 1865.

Where mustered in Providence R.I.

Bounty paid $33 100; due $ 100

Where credited Warren R.I. 1 Cav Det.

Company to which assigned

Remarks:

Not taken up on rolls of regt

Book mark:

Clerk

(339) Copyist.

L | 11 H. Art'y. | U.S.C.T.

Henry F Gardner

Appears with rank of Pvt on

Muster and Descriptive Roll of a Detachment of U. S. Vols. forwarded

for the 11 Reg't H.A. Co. Roll dated

Providence R.I. Jany 20, 1865.

Where born Warren R.I.

Age 21 y'rs; occupation Farmer

When enlisted Jany 19, 1865.

Where enlisted Providence R.I.

For what period enlisted 3 years.

Eyes Blk; hair Blk

Complexion dark; height 5 ft. 7 in.

When mustered in Jany 19, 1865.

Where mustered in Providence R.I.

Bounty paid $ 100 100; due $ 100 100

Where credited Town Warren R.I.

Company to which assigned

Remarks: Recruit, entitled to bounty

Book mark: 5869-2, A. Que 6 67

Lewis

(339) Copyist.

Gardner, Henry F.

Recruit, Co. 11 Regt. U.S.C.H.A.

2 Enclosures.

Bed Cards		Descriptive Lists	
Burial Records	2	Final Statements	2
Certs. of Dis. for Discharge		Furloughs	
C. M. Charges		Med. Des. Lists	
Med. Certificates		Orders	

Enlistment Papers 2

Other papers relating to—

Admission to Hosp'l		Furlough	
Casualty Sheet (Officer's)		Med. Examination	
Confinement		Misc. Information	1
Contracts		Pay or Clothing	
Death or Effects	1	Personal Reports	
Desertions		Rank	
Discharge from Hosp'l		Transfer to Hosp'l	
Discharge from Service		Transfer to V. R. C.	
Duty		Transportation	

NOTE 1.—This blank will be used for both **enlistments and re-enlistments**—enlistment of veterans, &c., in **the volunteer service**. They will be made out in duplicate in all cases—one to accompany the recruiting return of the superintendent (not the recruiting officer) to the Adjutant General, and one to accompany the accounts of the officer who pays bounty, &c. The Regiment and Company in which the soldier last served should be given on the back.

NOTE 2.—An enlistment holds to service. A muster-in must, in all cases, be filed in the Adjutant General's Office as evidence of muster-in. The mustering officer, commissary, or assistant commissary of musters, as the case may be, will countersign both enlistments as having mustered the soldier into the service of the United States before either of them is given to the disbursing officer.

DECLARATION OF RECRUIT.

I, Henry F. Gardner, desiring to VOLUNTEER as a Soldier in the **Army of the United States**, for the term of THREE YEARS, **Do Declare**, That I am Twenty One years ~~and~~ ~~months~~ of age; that I have never been discharged from the United States service on account of disability or by sentence of a court martial, or by order before the expiration of a term of enlistment; and I know of no impediment to my serving honestly and faithfully as a soldier for three years.

GIVEN at Providence R.I.

the 19th day of January 1865

Witness:

L. C. Warner

Henry F. Gardner

No. 1653

Enlisted at Providence R.I.

Volunteered at Providence R.I.

on the 19th day of January, 1865,

By Capt. W. E. Chandler for 3 Years

for the 11th Regiment of Cav. Maj. Gen. Sec'y of War

---

enlistment; last served in Company ( ) hundred and ---

Reg't of ---

Discharged ---, 18 .

Edward Carver

Jul 11 1871 RECEIVED ADJUTANT

CONSENT IN CASE OF MINOR.

I, ---, DO CERTIFY, That I am the --- of ---; that the said --- is --- years of age; and I do hereby freely give my CONSENT to his volunteering as a SOLDIER in the ARMY OF THE UNITED STATES for the period of THREE YEARS.

GIVEN at ---

the --- day of ---

Witness:

(A. G. O. No. 74 & 76.)

VOLUNTEER ENLISTMENT.

STATE OF Rhode Island TOWN OF Warren

I, Henry F. Gardner ——, born in Warren in the State of Rhode Island, aged Twenty One years, and by occupation a Farmer ——, Do HEREBY ACKNOWLEDGE to have volunteered this Nineteenth —day of January, 1865, to serve as a **Soldier** in the **Army of the United States of America,** for the period of *THREE YEARS*, unless sooner discharged by proper authority: Do also agree to accept such bounty, pay, rations, and clothing, as are, or may be, established by law for volunteers. And I, Henry F. Gardner, do solemnly swear, that I will bear true faith and allegiance to the ***United States of America,*** and that I will serve them honestly and faithfully against all their enemies or opposers whomsoever; and that I will observe and obey the orders of the President of the United States, and the orders of the officers appointed over me, according to the Rules and Articles of War.

Sworn and subscribed to, at Providence R.I. this 19th day of January, 1865, BEFORE Wm E Hamblin Capt. & Rv. Mus. 1st Dis. R.I. } Henry F Gardner

I CERTIFY, ON HONOR, That I have carefully examined the above-named Volunteer, agreeably to the General Regulations of the Army, and that, in my opinion, he is free from all bodily defects and mental infirmity, which would in any way disqualify him from performing the duties of a soldier.

C Gill Knight
Surg. Bd. Enrolt. 1st Dist. R.I.
EXAMINING SURGEON.

I CERTIFY, ON HONOR, That I have minutely inspected the Volunteer Henry F. Gardner previously to his enlistment, and that he was entirely sober when enlisted; that, to the best of my judgment and belief, he is of lawful age; and that, in accepting him as duly qualified to perform the duties of an able-bodied soldier, I have strictly observed the Regulations which govern the recruiting service. This soldier has Black *eyes,* Black *hair,* Black *complexion,* is five *feet* five *inches* high.

Wm E Hamblin
Capt. ~~Recruiting~~ & Rcr. Marshal ~~Volunteers~~
1st Dist. of R.I. RECRUITING OFFICER.

(A. G. O. No. 74 & 76.)

Mustered into the service of the United States, for three years or during the war, from date of enlistment, in Company Eleventh Regiment of Rhode Island Heavy Artillery Volunteers, on the 19th day of January, 1865, at Providence R.I.

Wm E Hamblin
Capt. & Rcr. Mus. 1st Dist. R.I.
Mustering Officer

DECLARATION OF RECRUIT.

I, Henry F. Gardner, desiring

to VOLUNTEER as a Soldier in the **Army of the United States**, for the term of THREE YEARS,

Do Declare, That I am Twenty One years ~~and~~ ~~months~~

of age; that I have never been discharged from the United States service on account of disability or by sentence of a court martial, or by order before the expiration of a term of enlistment; and I know of no impediment to my serving honestly and faithfully as a soldier for three years.

GIVEN at Providence R.I.

the 19th day of January 1865

Witness:

L. C. Warner

Henry F. Gardner

No. 1,763

Entry of Enlistment

Volunteered at Providence R.I.

January 19th, 1865;

By Capt. W. C. Chamberlain, Jun. for the 11th Regiment of the R.I. Heavy Artillery

( ) Awarded

( ) enlistment; last served in Company

Reg't of

Discharged

, 18 .

JUN 11 1878

CONSENT IN CASE OF MINOR.

I, , DO CERTIFY, That I am

the of ; that the

said is years of age; and I

do hereby freely give my CONSENT to his volunteering as a SOLDIER in the ARMY OF THE UNITED STATES for the period of THREE YEARS.

GIVEN at

the day of

Witness:

NOTE 1.—This blank will be used for both enlistments and re-enlistments—enlistment of veterans, &c., in the volunteer service. They will be made out in duplicate in all cases—one to accompany the recruiting return of the superintendent (not the recruiting officer) to the Adjutant General, and one to accompany the accounts of the officer who pays bounty, &c. The Regiment and Company in which the soldier last served should be given on the back.

NOTE 2.—An enlistment holds to service. A muster-in must, in all cases, precede payment of pay, bounty, pension, &c. A muster-in roll must, in all cases, be filed in the Adjutant General's Office as evidence of muster-in. The mustering officer, commissary, or assistant commissary of musters, as the case may be, will countersign both enlistments as having mustered the soldier into the service of the United States before either of them is given to the disbursing officer.

(A. G. O. No. 74 & 76.)

VOLUNTEER ENLISTMENT.

STATE OF *Rhode Island* TOWN OF *Warren*

I, *Henry F. Gardner* —, born in *Warren* in the State of *Rhode Island*, aged *Twenty One* years, and by occupation a *Farmer* ——, DO HEREBY ACKNOWLEDGE to have volunteered this *Nineteenth* — day of *January* — 1865, to serve as a ***Soldier*** in the **Army of the United States of America,** for the period of *THREE YEARS*, unless sooner discharged by proper authority: Do also agree to accept such bounty, pay, rations, and clothing, as are, or may be, established by law for volunteers. And I, *Henry F. Gardner*, do solemnly swear, that I will bear true faith and allegiance to the ***United States of America,*** and that I will serve them honestly and faithfully against all their enemies or opposers whomsoever; and that I will observe and obey the orders of the President of the United States, and the orders of the officers appointed over me, according to the Rules and Articles of War.

Sworn and subscribed to, at *Providence R.I.* this *19th* day of *January*, 1865, BEFORE *W^m E Hamlin* *Capt. & Prov. Mar. 1st Dist. R.I.* } *Henry F. Gardner*

I CERTIFY, ON HONOR, That I have carefully examined the above-named Volunteer, agreeably to the General Regulations of the Army, and that, in my opinion, he is free from all bodily defects and mental infirmity, which would in any way disqualify him from performing the duties of a soldier.

C. G. McKnight
Surg. Bd. Enroll. 1st Dist. R.I.
EXAMINING SURGEON.

I CERTIFY, ON HONOR, That I have minutely inspected the Volunteer *Henry F. Gardner* previously to his enlistment, and that he was entirely sober when enlisted; that, to the best of my judgment and belief, he is of lawful age; and that, in accepting him as duly qualified to perform the duties of an able-bodied soldier, I have strictly observed the Regulations which govern the recruiting service. This soldier has *Black* *eyes*, *Black* *hair*, *Black* *complexion*, is *five* *feet* *seven* *inches* high.

W^m E Hamlin
Capt. Recruiting Ser. Marshal ~~Volunteer~~,
1st Dist. R.I. RECRUITING OFFICER.

(A. G. O. No. 74 & 76.)

Mustered into the service of the United States, for three years or during the war, from date of enlistment, in Company *Eleventh* Regiment of *Rhode Island* Volunteers, on the *19th* day of *January*, 1865, at *Providence R.I.*

W^m E Hamlin
Capt. & Prov. Mar. 1st Dist. R.I.
Mustering Officer.

Extract from Act of Congress.

SEC. 12. *And be it further enacted*, That the fees of agents and attorneys for making out and causing to be executed the papers necessary to establish a claim for a pension, bounty, and other allowance before the Pension Office, under this act, shall not exceed the following rates: For making out and causing to be duly executed a declaration by the applicant, with the necessary affidavits, and forwarding the same to the Pension Office, with the requisite correspondence, ten dollars; which sum shall be received by such agent or attorney in full for all services in obtaining such pension, and shall not be demanded or received, in whole or in part, until such pension shall be obtained; and the sixth and seventh sections of an act entitled "An act to grant pensions," approved July [fourteenth,] eighteen hundred and sixty-two, are hereby repealed.

SEC. 13. *And be it further enacted*, That any agent or attorney who shall, directly or indirectly, demand or receive any greater compensation for his services under this act than is prescribed in the preceding section of this act, or who shall contract or agree to prosecute any claim for a pension, bounty, or other allowance under this act, on the condition that he shall receive a per centum upon any portion of the amount of such claim, or who shall wrongfully withhold from a pensioner or other claimant the whole or any part of the pension or claim allowed and due to such pensioner or claimant, shall be deemed guilty of a high misdemeanor, and, upon conviction thereof, shall, for every such offense, be fined not exceeding three hundred dollars, or imprisoned at hard labor not exceeding two years, or both, according to the circumstances and aggravations of the offense.

Approved July 4, 1864.

NOTE 10.—If any soldier is charged a higher fee than that allowed by the above act, he should report the fact and the name of the agent to the Adjutant General, in order that steps may be taken to have the same refunded.

FINAL STATEMENT

Job filed Dec 30 1865

Henry F. Gardner

1st Reg't of U.S.C. Artillery

VOLUNTEERS.

NOTE 1.—*Two* of these certificates (or duplicates) are to be given to each Volunteer Soldier or drafted man who may be discharged without being mustered out, (Final Statements are never given to men mustered out of service) that he may at once receive from the Paymaster the pay, &c., due him, and the captain or other COMMISSIONED officer commanding the company will certify to the act of the delivery of the duplicate certificates; with these certificates the Soldier is "entitled to" his *discharge*, and should also present his discharge to the Paymaster to have the payment endorsed on it. The discharge is to be given back to the Soldier by the Paymaster; the latter only retaining as his vouchers the duplicate certificates.

NOTE 2.—If the Soldier is entitled to pay for the use of his horse, the Company Commander will certify to that fact on the back of both these final statements, and also to the time he has pay due for having been so mounted on his own horse.

NOTE 3.—When a Soldier is furnished with final statements, his descriptive list, if he has one, should be taken up by the officer who gives the Soldier these statements, and endorsed with a statement to this effect by the officer. The endorsement should exhibit a full statement of the time for which the Soldier was allowed pay on his final statements, the clothing account, and all other charges against him or in his favor, so as to comprise a complete exhibit of his account. It will then be transmitted to the Company Commander of the Soldier, who will enter all the data necessary to a full understanding of the Soldier's account on the muster roll upon which the Soldier's discharge is reported. The descriptive list will then be destroyed. The object of this is, that the remaining portion of the Soldier's account may be settled upon the receipt of these muster rolls, and the Soldier receive any pay or allowances that may be due him at the time of his discharge, and which may not appear on his last final statements from the fact that his descriptive list is incomplete. These accounts for back pay, &c., are settled by the 2d Auditor of the Treasury Department.

NOTE 4.—Charges for loss or injury to ordnance, horse equipments, and other miscellaneous charges, should appear under the heading of "Other Stoppages."

NOTE 5.—Bounty paid by State authorities, and not by the United States, will not be entered on this statement.

NOTE 6.—Amounts due the Sutler and Laundress must be entered on the muster roll on which the discharge, death, desertion, &c., is reported, as well as on the final statement, otherwise the amount cannot be collected from the United States.

NOTE 7.—This blank will be used for deceased volunteers and drafted men, as well as for others.

NOTE 8.—Where a Soldier dies in Hospital or on detached service, his descriptive list, if he has one, should be sent with his final statements, in duplicate, to the Adjutant General, Washington D.C.

NOTE 9.—If the soldier is a drafted man or substitute, the space for time, &c., of enrolled, should contain only the word *drafted* or *substitute*, as the case may be. If the Soldier is a "VETERAN," (or RECRUIT,) the words *as a veteran*, (or *recruit*,) as the case may be, should be interlined after the words *mustered into the service of the U. S.* A statement of all the instalments of *Veteran* or *Recruit Bounty* RECEIVED by the Soldier must be made on the back of each final statement.

Duplicate sent to A.G.O. Aug 1865

I certify, on honor, that Henry F. Gardner, a Recruit of Captain ——— Company (—) of the 11th 12th 13th Regiment of U. S. C. A. (Hy)

~~VOLUNTEERS, of the State of~~ _____, born in _____, State of Rhode Island, aged 21 years; 5 feet 5 inches high; Black complexion, Black eyes, Black hair, and by occupation a Farmer ——, who joined for service and was enrolled (see Note 9) on the 19th day of January, 1865, at Providence R. I. by Capt. W. E. Hamlin Reg. Mas. as a recruit, for the period of Three years, and mustered into the service of the United States on the 19th day of January, 1865, at Providence R. I., by Capt. Wm. E. Hamlin Reg. Mst.; and having served HONESTLY and FAITHFULLY with his Company to the present date, is now entitled to a **DISCHARGE** by reason of Death. Died of Typhus Congestive Fever Feb. 23, 1865 at Key West, Fla. where he was left sick Feb. 16 1865. (when enroute to his Reg.)

The said Henry F. Gardner ~~was last paid by Paymaster~~ has never been paid, to include the _____ day of _____, 186 , and has pay due him from that time to the present date; he is entitled to pay and subsistence for **TRAVELING** to place of enrollment, and whatever other allowances are authorized to volunteer soldiers, drafted men, or militia, so discharged. He has received from the United States **CLOTHING** amounting to Twenty Five $\frac{24}{100}$ dollars, since the 19th day of January, 1865, when his clothing account was last settled. He has received from the United States One Hundred $\frac{-}{100}$ dollars advanced **BOUNTY**. Pd. by Capt. H. D. Hall. Mr. & Dis. off.

There is to be stopped from him, on account of the State of ———, or other authorities, for **CLOTHING**, &c., received on entering service, ——— $\frac{-}{100}$ dollars; and for other stoppages, viz: ———

——— $\frac{-}{100}$ dollars.

He has been furnished with TRANSPORTATION in kind from the place of his discharge to _____; and he has been SUBSISTED for TRAVELING to his place of enrollment, up to the _____, 186 .

He is indebted to _____, **SUTLER**, Nothing $\frac{-}{100}$ dollars.

He is indebted to _____, **LAUNDRESS**, Nothing $\frac{-}{100}$ dollars.

Given in Duplicate, at Donaldsonville, La., this 21st day of July, 1865.

L. Whiting
1st Lt. 11th U. S. C. A. (Hy)
Commanding Company.
& Adjt of Regiment

[A G O No 95—First.]

A.G.O. Reported in the 2nd A. Dec. 6, 67 (W.S.)

FINAL STATEMENT

of

Henry F. Gardner

11th Reg't of U.S.C. Artillery

(Recruit)

VOLUNTEERS.

Died Dec. 23, 1863.

Extract from Act of Congress.

SEC. 12. *And be it further enacted*, That the fees of agents and attorneys for making out and causing to be executed the papers necessary to establish a claim for a pension, bounty, and other allowance before the Pension Office, under this act, shall not exceed the following rates: For making out and causing to be duly executed a declaration by the applicant, with the necessary affidavits, and forwarding the same to the Pension Office, with the requisite correspondence, ten dollars; which sum shall be received by such agent or attorney in full for all services in obtaining such pension, and shall not be demanded or received, in whole or in part, until such pension shall be obtained; and the sixth and seventh sections of an act entitled "An act to grant pensions," approved July [fourteenth,] eighteen hundred and sixty-two, are hereby repealed.

SEC. 13. *And be it further enacted*, That any agent or attorney who shall, directly or indirectly, demand or receive any greater compensation for his services under this act than is prescribed in the preceding section of this act, or who shall contract or agree to prosecute any claim for a pension, bounty, or other allowance under this act, on the condition that he shall receive a per centum upon any portion of the amount of such claim, or who shall wrongfully withhold from a pensioner or other claimant the whole or any part of the pension or claim allowed and due to such pensioner or claimant, shall be deemed guilty of a high misdemeanor, and, upon conviction thereof, shall, for every such offense, be fined not exceeding three hundred dollars, or imprisoned at hard labor not exceeding two years, or both, according to the circumstances and aggravations of the offense.

Approved July 4, 1864.

NOTE 10.—If any soldier is charged a higher fee than that allowed by the above act, he should report the fact and the name of the agent to the Adjutant General, in order that steps may be taken to have the same refunded.

A.G.O. Mch 11th 1865

Statement of Effects

Recd 21 Dec. 1863

ADJUTANT GENERAL'S OFFICE.

May 29. 1865.

Duplicate with Inventory sent 2d Auditor.

NOTE 1.—*Two* of these certificates (or duplicates) are to be given to each Volunteer Soldier or drafted man who may be discharged without being mustered out (Final Statements are never given to men mustered out of service) that he may at once receive from the Paymaster the pay, &c., due him, and the captain or other COMMISSIONED officer commanding the company will certify to the act of the delivery of the duplicate certificates; with these certificates the Soldier is "entitled to" his *discharge*, and should also present his discharge to the Paymaster to have the payment endorsed on it. The discharge is to be given back to the Soldier by the Paymaster; the latter only retaining as his vouchers the duplicate certificates.

NOTE 2.—If the Soldier is entitled to pay for the use of his horse, the Company Commander will certify to that fact on the back of both these final statements, and also to the time he has pay due for having been so mounted on his own horse.

NOTE 3.—When a Soldier is furnished with final statements, his descriptive list, if he has one, should be taken up by the officer who gives the Soldier these statements, and endorsed with a statement to this effect by the officer. The endorsement should exhibit a full statement of the time for which the Soldier was allowed pay on his final statements, the clothing account, and all other charges against him or in his favor, so as to comprise a complete exhibit of his account. It will then be transmitted to the Company Commander of the Soldier, who will enter all the data necessary to a full understanding of the Soldier's account on the muster roll upon which the Soldier's discharge is reported. The descriptive list will then be destroyed. The object of this is, that the remaining portion of the Soldier's account may be settled upon the receipt of these muster rolls, and the Soldier receive any pay or allowances that may be due him at the time of his discharge, and which may not appear on his last final statements from the fact that his descriptive list is incomplete. These accounts for back pay, &c., are settled by the 2d Auditor of the Treasury Department.

NOTE 4.—Charges for loss or injury to ordnance, horse equipments, and other miscellaneous charges, should appear under the heading of "Other Stoppages."

NOTE 5.—Bounty paid by State authorities, and not by the United States, will not be entered on this statement.

NOTE 6.—Amounts due the Sutler and Laundress must be entered on the muster roll on which the discharge, death, desertion, &c., is reported, as well as on the final statement, otherwise the amount cannot be collected from the United States.

NOTE 7.—This blank will be used for deceased volunteers and drafted men, as well as for others.

NOTE 8.—Where a Soldier dies in Hospital or on detached service, his descriptive list, if he has one, should be sent with his final statements, in duplicate, to the Adjutant General, Washington, D. C.

NOTE 9.—If the soldier is a drafted man or substitute, the space for time, &c., of enrolled, should contain only the word *drafted* or *substitute*, as the case may be. If the Soldier is a "VETERAN," (or RECRUIT,) the words *as a veteran*, (or *recruit*,) as the case may be, should be interlined after the words *mustered into the service of the U. S.* A statement of all the installments of *Veteran* or *Recruit Bounty* RECEIVED by the Soldier must be made on the back of each final statement.

1866

I certify, on honor, that Henry F. Gardner., a Recruit of Captain ~~~~~~~~~~~~~~~~~~~~ Company (—) of the 11th Lt. Bt. Regiment of U. S. C. A. (Hy) ~~VOLUNTEERS, of the State of~~ _____, born in _____, State of Rhode Island, aged 21 years; 5 feet 5 inches high; Black complexion, Black eyes, Black hair, and by occupation a Farmer, who joined for service and was enrolled (see Note 9) on the 19th day of January, 1865, at Providence R.I. by Capt. W. E. Hamlin Reg. Mar, for the period of Three — years, and mustered into the service of the United States as a Recruit on the 19th day of January, 1865, at Providence R. I., by Capt. W. E. Hamlin Reg. Mar.; and having served HONESTLY and FAITHFULLY with his Company to the present date, is now entitled to a **DISCHARGE** by reason of Death. Died of Typhus Congestive fever. Feb. 23d 1865. at Key West. Fla. (where he was left sick, Feb. 16. 1865. when wrote to his Reg.)

The said Henry F. Gardner ~~was last paid by Paymaster~~ has never been paid, to include the _____ day of _____, 186 , and has pay due him from that time to the present date; he is entitled to pay and subsistence for **TRAVELING** to place of enrollment, and whatever other allowances are authorized to volunteer soldiers, drafted men, or militia, so discharged. He has received from the United States **CLOTHING** amounting to Twenty five $\frac{24}{100}$ dollars, since the 19th day of January, 1865, when his clothing account was last settled. He has received from the United States One Hundred $\frac{-}{100}$ dollars advanced **BOUNTY**. P.D. by Capt W. D. Hall. M. & Dis. Off.

There is to be stopped from him, on account of the State of _____, or other authorities, for **CLOTHING**, &c., received on entering service, _____ $\frac{-}{100}$ dollars; and for other stoppages, viz: _____

_____ $\frac{-}{100}$ dollars.

He has been furnished with TRANSPORTATION in kind from the place of his discharge to _____; and he has been SUBSISTED for TRAVELING to his place of enrollment, up to the _____, 186 .

He is indebted to _____, **SUTLER**, Nothing $\frac{-}{100}$ dollars.

He is indebted to _____, **LAUNDRESS**, Nothing $\frac{-}{100}$ dollars.

Given in Duplicate, at Donaldsonville La., this 21st day of July, 1865.

J. B. Whiting
1st Lt. 11th U.S.C.A. (Hy)
~~Commanding Company~~ & Adjutant of the Regiment

[A G O No 95 - First]

Effects

Soldiers Effects

Thos

ARTICLES OF WAR.

ART. 95. When any non-commissioned officer or soldier shall die, or be killed in the service of the United States, the then commanding officer of the troop or company shall, in the presence of two other commissioned officers, take an account of what effects he died possessed of, above his arms and accoutrements, and transmit the same to the office of the Department of War, which said effects are to be accounted for, and paid to the representatives of such deceased non-commissioned officer or soldier. And in case any of the officers, so authorized to take care of the effects of deceased officers and soldiers, should, before they have accounted to their representatives for the same, have occasion to leave the regiment or post, by preferment or otherwise, they shall, before they be permitted to quit the same, deposit in the hands of the commanding officer, or of the assistant military agent, all the effects of such deceased non-commissioned officers and soldiers, in order that the same may be secured for, and paid to, their respective representatives.

ARMY REGULATIONS—EDITION OF 1863.

DECEASED SOLDIERS.

Par. 152. Inventories of the effects of deceased non-commissioned officers and soldiers, required by the 95th Article of War, will be forwarded to the Adjutant General, by the commander of the company to which the deceased belonged, and a duplicate of the same to the colonel of the regiment. Final statements of pay, clothing, &c., in duplicate, will be sent to the Adjutant General with one copy of the inventory. When a soldier dies at a post or station absent from his company, it will be the duty of his immediate commander to furnish the required inventory and final statements, and, at the same time, to forward to the commanding officer of the company to which the soldier belonged, a report of his death, specifying the date, place, and cause; to what time he was last paid, and the money or other effects in his possession at the time of his decease; which report will be noted on the next muster roll of the company to which the man belonged. Each inventory will be endorsed, "Inventory of the effects of ——— ———, late of company (—,) ——— regiment of ———, who died at ———, the —— day of ———, 186–." If a legal representative receive the effects, it will be stated in the report. If the soldier leave no effects, the fact will be reported.

Par. 153. Should the effects of a deceased non-commissioned officer or soldier not be administered upon within a short period after his decease, they shall be disposed of by a Council of Administration, under the authority of the commanding officer of the post, and the proceeds deposited with the Paymaster, to the credit of the United States, until they shall be claimed by the legal representatives of the deceased.

Par. 154. In all such cases of sales by the Council of Administration, a statement in detail, or account of the proceeds, duly certified by the Council and commanding officer, accompanied by the Paymaster's receipt for the proceeds, will be forwarded by the commanding officer to the Adjutant General. The statement will be endorsed, "Report of the proceeds of the effects of ——— ———, late of company (—,) ——— regiment of ———, who died at ———, the —— day of ———, 186–."

NOTE 1.—The effects in all cases, when called for, should be turned over to the legal representative, without further authority from the Adjutant General. When the effects are turned over to the relatives of the deceased before these inventories are sent to the Adjutant General, their receipts therefor should be attached to the inventories. In all other cases, one copy will be sent with a letter of transmittal direct to the Adjutant General, and a duplicate retained by the officer.

NOTE 2.—Particular care should be taken to take receipts in duplicate from the Paymaster for any funds turned over to him; one copy should be sent direct to the Adjutant General and one retained by the officer.

INVENTORY OF THE EFFECTS

OF

Henry F. Gardner
a Recruit

Late of Company ———

11th *Reg't of* U.S. Art'y. (Heavy)

Volunteers, who died at Key West, Fla

on the 23d *day of* February 1865.

Fwd 1172 A.G., 15.1865

Inventory of the effects of Henry F Gardner late
a ~~Recruit~~ * Private ~~of Captain~~ _____ ~~Company~~ _____ of
the 11th Regiment of U S C Arty Heavy Volunteers, who was enrolled as
a Recruit * at Providence in the State of Rhode Island on
the 19th day of January 1865, and mustered into the service of the United
States as a Recruit on the 19th day of January 1865, at Providence R.I.
in Company the 11th Regiment of U.S. C. Arty Hvy Volunteers, to serve Three
years or during the war; he was born in Warren in the State
of Rhode Island; he was 21 years of age, five feet five inches
high, Black complexion, Black eyes, Black hair, and by occupation, when enrolled,
a Farmer; he died in U.S. Post Hospital, at
Key West, Fla on the 23d day of February 1865, by
reason of Congestive Fever

INVENTORY.

Articles.	No.	Articles.	No.	Articles.	No.
Hats		Pairs trowsers		Knapsacks	1
Caps	1	Pairs flannel drawers			
Forage caps		Pairs cotton drawers			
Great coats	1	Flannel shirts			
Uniform coats		Cotton shirts			
Uniform jackets		Pairs boots			
Flannel sack coats		Pairs shoes			
Blouses		Pairs socks			
Stable frocks		Blankets	1		
Fatigue overalls		Haversacks			
				Money. Specie	$ 2
				Notes	$ 1

I certify, on honor, that the above inventory comprises all the effects of Henry F Gardener, deceased, ~~and that the effects are in the hands~~
of _____ ~~at~~
_____ ~~to be disposed of by a Council of Administration.~~

(DUPLICATES.)

Jno. L. McCauley
Surgeon 2d U.S.V.V. Infty.
~~Commanding the Company~~
in Charge of Hospital

STATION: Key West, Fla

DATE: July 31st 1865

[A. G. O. No. 104

Descriptive filled out by Regt Adjt - this 15th January 1865 -
J.C. Spurling Jr
1st Lt. 11th U.S.C.A. (Hvy) & Acting Adjt of Regt.

Henry F Gardner
Recruit 11" cold R. I. Regt
Feb. 23, 1865
Key West Fla.

11 U.S.C.H.A

HOSPITAL RECORD,

SUBJECT TO THE

ORDER OF THE SURGEON GENERAL

UNITED STATES ARMY.

S

File 115

No. 1.

RECORD OF DEATH AND INTERMENT.

Name and number of person interred.	Henry F. Gardner
Number and locality of the grave . .	U.S. Military Cemetery
Hospital number of the deceased . .	No 5
Regiment, rank, and company . . .	11th Colt. Rhode Island Regt. Co. "Hermit"
Residence before enlistment . . .	Providence R.I.
Conjugal condition, (and if married, the residence of the widow) . .	Unknown
Cause of death	Typho Congestive Fever
Age of the deceased	
Nativity	Rhode Island
References and remarks	Said soldier was taken off Steamer Empire City no discription List was sent with Soldier.
Date of death and burial	February 23rd 1865.

Duplicates sent to the Adjutant General of the United States Army, and to the Sexton of the Military Cemetery.

Memoranda:

COPY OF RECORD FOR THE ADJUTANT GENERAL U.S. ARMY.

Hd. Qrs. Pleasonton's Div. July 3rd 1865.

Henry F. Gardner
1st Lt. & Actg. Aid Gues!

Rec'd Feb 23, 1865.

Directed for Sig. July 2d 1865

Do keep over a short time to see if co comes gets the inf the wounds. See
1344, Vol. 2. A.G.O. 1865
p3,

No. 2.

RECORD OF DEATH AND INTERMENT.

Name and number of person interred.	Henry F. Gardner
Number and locality of the grave . .	13. Military Cemetery
Hospital number of the deceased . .	do 5.
Regiment, rank, and company . . .	11th Col'd Rhode Island Regt.
Residence before enlistment . . .	Providence R. I.
Conjugal condition, (and if married, the residence of the widow) . .	Unknown
Cause of death	Typho. Congestive Fever.
Age of the deceased	
Nativity	Rhode Island
References and remarks	Said soldier was taken off Steamer Empire City- no discription list was sent with Soldier.
Date of death and burial	February 23. 24. 1865.

[A duplicate of this Record has been forwarded to the Sexton, and another remains at this Hospital.]

To Adjutant General U. S. A.

SIR:

It becomes my duty to inform you that the person above described died at this Hospital as herein stated; and that it is desired his remains should be interred with the usual military honors.

Respectfully,

Wm. M. Cully 2d
Surgeon U. S. ~~Army~~. C. S.
In charge.

MILITARY HOSPITAL, Key West, Fla.

This copy of Record is to be transmitted to the Adjutant General at Washington immediately after the place of burial and the number of the grave have been ascertained and registered. The above notification is to remain attached.

U. S. Post Hospital
Key West, Fla.
July 14' 1865

Respectfully returned to
Adjutant General, U.S.A.

The within named soldier
was taken off the Steamer
Empire City. No Discriptive
list could be obtained and
it is impossible therefore, for
the Surgeon in Charge, to
make out the required
final Statements. The usual
notification has been sent to his
Company Commander

Wm A. McGilley
Surgeon 2. USInfty.
in Charge.

---

1 Enclosure
(Inventory of Effects.)

No Sig on inv.

RECEIVED
JUL 22
1865
ADJUTANT GEN'LS OFFICE

WAR DEPARTMENT,

ADJUTANT GENERAL'S OFFICE,

WASHINGTON, July 3d, 1865.

SIR:

Final Statements in the cases of deceased soldiers are required to be sent to the Adjutant General's Office in duplicate, with one copy of the Inventory of Effects. The Descriptive List should also be sent to this Office in cases where the soldier was absent from his Company at the time of his death. Where there were no effects, it should be so stated on a blank Inventory, properly signed.

Certificates of Disability should be sent in duplicate. Special care should be taken that the date of discharge and signature of the discharging officer should be affixed.

No. ~~of the~~ Final Statement No. Inventory, has been received in the case of Henry L. Sanders, of Co. ——, 11th Regiment of Miss. Mty Hvy Artillery Volunteers, whose papers were forwarded to this Office. You will please forward the missing papers without delay.

I have the honor to be, sir,

Very respectfully,

Your obedient servant,

E. D. Townsend

Assistant Adjutant General.

(110)

COMMANDING OFFICER

Surgeon Wm. H. McCully

2d Va. S. S. Surgeon

Ft. Taylor

Florida

See Record of death of this man
signed by Gen. Ds Inventory of effects
have as yet been rec'd.

D. W.

[illegible]

[illegible], 11 U.S.Col'd H.A. [illegible]

Ernest Ernest

CARD NUMBERS.

1 6182202	26
2 6182348	27
3 6182500	28
4 6182841	29
5 6182778	30
6 6182909	31
7 6183117	32
8 6183799	33
9 9123969	34
10 9123816	35
11	36
12	37
13	38
14	39
15	40
16	41
17	42
18	43
19	44
20	45
21	46
22	47
23	48
24	49
25	50

Book Mark:

See also

G | 11 H. Art'y. | U.S.C.T.

Henry I Gardner

, Co. D, 11 Reg't U. S. Col'd H. Art'y.

Appears on

Company Descriptive Book

of the organization named above.

DESCRIPTION.

Age 28 years; height 5 feet 11½ inches.

Complexion Dk Mulatto

Eyes Dk Hazel; hair Blk

Where born Charlestown R I

Occupation Farmer

ENLISTMENT.

When Aug 12, 1863.

Where Providence

By whom W H Helme; term 3 y'rs.

Remarks: Recd at Fort Jackson La Sept 24. 64 Final statements & inventory rend. Sept 24. 64

(3837) Coppist.

G | 11 H. Art'y. | U.S.C.T.

Henry J Gardner

, Co. a, 11 Reg't U. S. Col'd H. Art'y.

Appears on

Company Descriptive Book

of the organization named above.

DESCRIPTION.

Age 28 years; height 5 feet 11½ inches.

Complexion Dk Mulatto

Eyes Dk Hazel; hair Blk

Where born Charlestown R. I.

Occupation Farmer

ENLISTMENT.

When Aug 12, 186 3.

Where Providence

By whom W H Helm; term 3 y'rs.

Remarks: Died at Fort Jackson La Sept 24/64. Deserted at Providence R. I. re-taken at Boston Mass $30 stoppt. — 186 . same. found by wm. N. Mixter A. 2 Dr. Notice rec'd 186- from Boston Mass. Inventory & final statements rec'd Sept 25/64

James

(3830) Copyist.

G | 11 H. Art'y. | U.S.C.T.

Henry J Gardner

Pvt., Co. A, 14 Reg't R. I. Col'd H. Art'y.*

Age 28 years.

Appears on

Company Muster-in Roll

of the organization named above. Roll dated Camp Smith near Providence R.I., Aug 28, 1863.

Muster-in to date Aug 28, 1863.

Joined for duty and enrolled:

When July 12, 1863.

Where Providence

Period 3 years.

Valuation of horse, $ 100

Valuation of horse equipments, $ 100

Remarks: 2nd District

* This organization subsequently became Co. A, 11 Reg't U. S. Colored Heavy Artillery.

Book mark:

Prewitt

Copyist.

G | 11 H. Art'y. | U.S.C.T.

Henry J. Gardner

Pvt., Co. A, 14 Reg't R. I. Col'd H. Art'y.*

Appears on

Company Muster Roll

for Aug 28 to Dec 31, 1863.

Present or absent Present

Stoppage, $ ---- 100 for ----

Due Gov't, $ ---- 100 for ----

Valuation of horse, $ ---- 100

Valuation of horse equipments, $ ---- 100

Remarks: ----

*This organization subsequently became Co. A, 11 Reg't U. S. Colored Heavy Artillery.

Book mark: ----

Prewitt

Copyist.

G | 11 H. Art'y. | U.S.C.T.

Henry J Gardner

Pvt., Co. A, 14 Reg't R. I. Col'd H. Art'y.*

Appears on

Company Muster Roll

for Jan & Feb, 1864.

Present or absent Present

Stoppage, $ 100 for

Due Gov't, $ 100 for

Valuation of horse, $ 100

Valuation of horse equipments, $ 100

Remarks:

*This organization subsequently became Co. A, 11 Reg't U. S. Colored Heavy Artillery.

Book mark:

Prevatt

Copyist.

G | 11 H. Art'y. | U.S.C.T.

Henry J. Gardner

Pvt., Co. A, 14 Reg't R. I. Col'd H. Art'y.*

Appears on

Company Muster Roll

for Mch & Apl, 1864.

Present or absent Present

Stoppage, $ 100 for

Due Gov't, $ 100 for

Valuation of horse, $ 100

Valuation of horse equipments, $ 100

Remarks:

*This organization subsequently became Co. A, 11 Reg't U. S. Colored Heavy Artillery.

Book mark:

Prewitt

(358) Copyist.

G | 11 H. Art'y. | U.S.C.T.

Henry J. Gaulman

Pvt., Co. C, 8 Reg't U. S. Col'd H. Art'y.*

Appears on

Company Muster Roll

for May & June, 1864.

Present or absent Present

Stoppage, $ ..... 100 for .....

Due Gov't, $ ..... 100 for .....

Valuation of horse, $ 100

Valuation of horse equipments, $ 100

Remarks: .....

† This organization subsequently became Co. L, 11 Reg't U. S. Colored Heavy Artillery.

Book mark: .....

Prewitt
Copyist.

G. | 11 H. Art'y. | U.S.C.T.

Henry F. Gardner

R. L., Co. A, 11 Reg't U. S. Col'd H. Art'y.

Appears on

Company Muster Roll

for July & Aug., 1864.

Present or absent Present

Stoppage, $ 100 for

Due Gov't, $ 100 for

Valuation of horse, $ 100

Valuation of horse equipments, $ 100

Remarks: Died April 19, 1864

Book mark:

D. A. Hall

Copyist.

G | 11 H. Art'y. | U.S.C.T.

Henry C. Gardner

P., Co. A, 11 Reg't U. S. Col'd H. Art'y.

Appears on

Company Muster Roll

for Sept. & Oct., 1864.

Present or absent

Stoppage, $ 86/100 for Rations

$ 1 93/100 " Camps & G. C.

Due Gov't, $ 30 0/100 for Expense of Apprehension as a Deserter

Valuation of horse, $ 100

Valuation of horse equipments, $ 100

Remarks: Deceased

Died in Batt. Hospital at Post Jackson Ga. Sept. 24th 1864

Muster & Final Statements rendered

Book mark: 148.13-21

P. Fisk

Copyist.

G. | 11 H. Art'y. | U.S.C.T.

Edenny J. Gardner,

Pvt., Co. A., 11 Reg't U. S. Col'd H. Art'y.

Appears on **Co. Muster-out Roll,** dated

New Orleans, La., Oct. 2, 1865.

Muster-out to date ....., 186 .

Last paid to ....., 186 .

Clothing account:

Last settled....., 186 ; drawn since $.....100

Due soldier $.....100; due U. S. $.....100

Am't for cloth'g in kind or money adv'd $.....100

Due U. S. for arms, equipments, &c., $.....100

Bounty paid $.....100; due $.....100

Remarks: Joined Co'l. Regt.

Died Ft. Jackson, La.,

Sept. 24/64 Onrty. & Final

Stat's Sept. 24/64.

Book mark: 148.102 H. B. V.

---

(361) R. H. Symmes

Copyist.

Gardner, Henry J.

P, Co. A, 11 U.S.C.H.A. Reg't

3 Enclosures.

Bed Cards	Descriptive Lists
Burial Records	Final Statements 2
Certs. of Dis. for Discharge	Furloughs
C. M. Charges	Med. Des. Lists
Med. Certificates	Orders

Other papers relating to—

Admission to Hosp'l	Furlough
Casualty Sheet (Officer's)	Med. Examination
Confinement	Misc. Information
Contracts	Pay or Clothing
Death or Effects /	Personal Reports
Desertions	Rank
Discharge from Hosp'l	Transfer to Hosp'l
Discharge from Service	Transfer to V. R. C.
Duty	Transportation

V

FINAL STATEMENT

OF

Henry J Gardner

11th Reg't of M.S.C.A.H.C.

VOLUNTEERS.

Paid Sept. 24th 1864

NOTE 1.—*Two* of these certificates (or duplicates) are to be given to each volunteer soldier who may be discharged previously to the discharge of his company, that he may at once receive from the Paymaster the pay, &c., due him, and the captain or other officer commanding the company will certify to the act of the delivery of the duplicate certificates; on these certificates the Soldier is "entitled to" his *discharge*, and should also present his discharge to the Paymaster to have the payment endorsed on it. The discharge is to be given back to the Soldier by the Paymaster; the latter only retaining as his voucher the duplicate certificates.

NOTE 2.—If the Soldier is entitled to pay for the use of his horse, the Company Commander will certify to that fact, and also to the time he has pay due for having been so mounted on his own horse.

NOTE 3.—Amounts due the Sutler and Laundress must be entered on the Muster Roll on which the death, desertion, &c., is reported, as well as on the final statement, otherwise the amount cannot be collected from the United States.

NOTE 4.– This blank will be used for deceased volunteers as well as others.

ADJUTANT GENERAL'S OFFICE.
Oct 25" 1864
Duplicate with Inv... ...ent 2d Auditor.

RECEIVED OCT 24 1864 ADJUTANT GEN'LS OFFICE

I certify, on honor, that Henry J. Gardner a Private of Captain Thos W. Terry's Company (A) of the 11th Regiment of R. I. H. A. (Hy) VOLUNTEERS, of the State of Rhode Island, born in Charlestown, State of Rhode Island, aged 28 years; 5 feet 11¼ inches high; Fair complexion, Hazle eyes, Black hair, and by occupation a Farmer, having joined the company on its original organization at Providence R. I., and enrolled in it at the muster into the service of the United States at Providence R. I., on the 28th day of August, 1863, (or was mustered in service as a recruit, by Wm. H. Helme, at Providence, on the 12th day of August, 1863, to serve in the Regiment,) for the term of Three Years; and having served HONESTLY and FAITHFULLY with his Company in 11th R. I. L. A. (Hy) to the present date, is now entitled to a DISCHARGE by reason of Death of Typhus Fever And Sept. 21st 1864 per Surgeon)

The said Henry J. Gardner was (never) last paid by Paymaster to include the day of , 186 , and has pay due him from that time to the present date; he is entitled to pay and subsistence for TRAVELING to place of enrollment and whatever other allowances are authorized to volunteer soldiers, or militia, so discharged. He has received Fifty Four 75/100 dollars, advanced by the United States on account of CLOTHING.

There is to be stopped from him, on account of the State of , or other authorities for CLOTHING, &c., received on entering service, 00/100 dollars; also, for expenses of SUBSISTENCE for TRAVELING from place of enrollment to the place of rendezvous, amounting to 00/100 dollars: and on account of the United States for EXTRA CLOTHING received in kind from and for other stoppages, viz: Stoppage for Ordnance &c Stoppage for Camp and Garrison Equipage one dollar 93/100 amounting to 00/100 dollars; and he has been SUBSISTED for TRAVELING to his place of enrollment, up to the , 186 .

He is indebted to , SUTLER, 00/100 dollars.

He is indebted to , LAUNDRESS, 00/100 dollars.

Given in Duplicate, at Fort Jackson, Lou.; this 24th day of Sept., 1864.

Thos W Terry Capt
11th R I Vol
Commanding Company.

[A. G. O. No. 95.]

25
3d Aux 2d 1864

FINAL STATEMENT

OF

Henry J Gardner

11th Reg't of U.S.C.H. Heavy.

VOLUNTEERS.

NOTE 1.—*Two* of these certificates (or duplicates) are to be given to each Volunteer Soldier or drafted man who may be discharged previously to the discharge of his company, that he may at once receive from the Paymaster the pay, &c., due him, and the captain or other COMMISSIONED officer commanding the company will certify to the act of the delivery of the duplicate certificates; on these certificates the Soldier is "entitled to" his *discharge*, and should also present his discharge to the Paymaster to have the payment endorsed on it. The discharge is to be given back to the Soldier by the Paymaster; the latter only retaining as his voucher the duplicate certificates.

NOTE 2.—If the Soldier is entitled to pay for the use of his horse, the Company Commander will certify to that fact on the back of both these final statements, and also to the time he has pay due for having been so mounted on his own horse.

NOTE 3.—When a Soldier is furnished with final statements, his descriptive list, if he has one, should be taken up by the officer who gives the Soldier these statements, and endorsed with a statement to this effect by the officer. This endorsement should exhibit a full statement of the time for which the Soldier was allowed pay on his final statements, the clothing account, and all other charges against him or in his favor, so as to comprise a complete exhibit of his account. It will then be transmitted to the company commander of the Soldier, who will enter all the data necessary to a full understanding of the Soldier's account on the muster roll upon which the Soldier's discharge is reported. The descriptive list will then be destroyed. The object of this is, that the remaining portion of the Soldier's account may be settled upon the receipt of these muster rolls, and the Soldier receive any pay or allowances that may be due him at the time of his discharge, and which may not appear on his final statements from the fact that his descriptive list is incomplete. These accounts for back pay, &c., are settled by the 2d Auditor of the Treasury Department.

NOTE 4.—Charges for loss or injury to ordnance, horse equipments, and other miscellaneous charges, should appear under the heading of "Other Stoppages."

NOTE 5.—Bounty paid by State authorities, and not by the United States, will not be entered on this statement.

NOTE 6.—Amounts due the Sutler and Laundress must be entered on the muster roll on which the discharge, death, desertion, &c., is reported, as well as on the final statement, otherwise the amount cannot be collected from the United States.

NOTE 7.—This blank will be used for deceased volunteers and drafted men, as well as for others.

NOTE 8.—Where a Soldier dies in Hospital or on detached service, his descriptive list, if he has one, should be sent with his final statements, in duplicate, to the Second Auditor, Washington, D. C.

RECEIVED
JUL
6
1871
2d AUDITOR'S OFFICE

1864

I certify, on honor, that Henry J Gardner a Private of Captain Thos W Fry Company (A) of the 11th Regiment of U S C A Heavy VOLUNTEERS, of the State of Rhode Island, born in Charlestown, State of Rhode Island, aged 28 years; 5 feet 11¼ inches high; Mulatto complexion, Hazel eyes, Black hair, and by occupation a Farmer, having joined the company on its original organization at Providence, and enrolled in it at the muster into the service of the United States at Providence R I, on the Twenty Eighth day of August, 1863, (or was mustered in service as a recruit by ~~Capt Potter~~ W H Helme ~~1st Lieut~~, at Providence, on the Twelfth day of August, 186 , or was drafted and mustered into the service of the United States from the Enrollment District of the State of , at , on the day of , 186 ,) to serve in the Regiment, for the term of Three Years: and having served HONESTLY and FAITHFULLY with his Company in 11th U S C A Heavy. to the present date, is now entitled to a DISCHARGE by reason of Death Caused by Typhus Fever.

The said Henry J Gardner never was ~~last~~ paid by Paymaster to include the day of , 186 , and has pay due him from that time to the present date; he is entitled to pay and subsistence for TRAVELING to place of enrollment, and whatever other allowances are authorized to volunteer soldiers, drafted men, or militia, so discharged. He has received from the United States CLOTHING amounting to Fifty Four 25/100 dollars, since the 12th day of August, 1863, when his clothing account was last settled. He has received from the United States 00/100 dollars advanced BOUNTY.

There is to be stopped from him, on account of the State of , or other authorities, for CLOTHING, &c., received on entering service, 00/100 dollars; and for other stoppages, viz: Thirty Dollars Paid for his apprehension as a Deserter by Wm W McKim Capt & Agent Boston Mass 00/100 dollars.

He has been furnished with TRANSPORTATION in kind from the place of his discharge to ; and he has been SUBSISTED for TRAVELING to his place of enrollment, up to the , 186 .

He is indebted to , SUTLER, 00/100 dollars.

He is indebted to , LAUNDRESS, 00/100 dollars.

Given in Duplicate, at Fort Jackson La, this 24th day of September, 1864.

Thos W Fry
Capt 11th U S C A Heavy
Commanding Company

A. G. O. No. 95—First.]

Inventory of the Effects.

of

Henry J. Gardner,

Late of Company A'

11th Regt U S C A Heavy.

Vols. who died at Fort Jackson La

on the 24th Day of September 1864

Inventory of the Effects of Henry J Gardner late a Private of Capt Tho W Jay's Co (A) of the 11th Regt of U.S.C.A.H. who was enrolled as a Private at Providence in the State of Rhode Island on the 12th day of August 1863. and Mustered into the Service of the United States as a Private on the 28th at Rowdence R.I. in Co A. 14th R.I.H.A.
Day of August 1863. To Serve three Years or during the War. He was born in Charleston State of Rhode Island. he was 28 years of age. 5 feet 11½ inches high Mulatto Complexion, Hazel Eyes, Black Hair, and by Occupation when Enrolled Farmer. He died in Batt Hospital at Fort Jackson La September 24th 1864 by reason of Typhus Fever

Inventory					
Articles.	No.	Articles.	No	Articles	No

No Effects.

I certify on honor that the Deceased had no effects.

Station Fort Jackson La.

Date. September 24. 1864

Tho W Jay

Capt 11th U.S.C.A.H.

Commanding Company.

Co. "D", 11 U.S.Col'd H.A.

Private Prince

CARD NUMBERS.

1 5346708 1	26
2 618 1262	27
3 618 1270	28
4 5346 7565	29
5 618 1641	30
6 618 8084	31
7 618 8219	32
8 618 8336	33
9 618 8453	34
10 618 8617	35
11 618 8753	36
12 9124574	37
13 9124822	38
14	39
15	40
16	41
17	42
18	43
19	44
20	45
21	46
22	47
23	48
24	49
25	50

Book Mark: P.V. 2. P. 86-68

See also

G | 11 H. Art'y. | U.S.C.T.

Joseph C. Gardner

, Co. D, 11 Reg't U. S. Col'd H. Art'y.

Appears on

Company Descriptive Book

of the organization named above.

DESCRIPTION.

Age 22 years; height 5 feet 8½ inches.

Complexion Dark

Eyes Dark; hair Dark

Where born Swanzey, Mass.

Occupation Laborer.

ENLISTMENT.

When Aug 18, 1864.

Where Prov., R. I.

By whom A. B. Chadsey; term 1 y'rs.

Remarks: Volunteer Recruit Bounty drawn $33.33 Due $66.66 Died at Brashear La, June 24, 1865. Cause Consumption following Syphilis. F. S. & D. forwarded June 29, 1865.

O. J. Markle,

(3854) Copyist.

G | 11 H. Art'y. | U.S.C.T.

Joseph C. Gardner

, Co. D, 11 Reg't U. S. Col'd H. Art'y.

Appears on

Company Descriptive Book

of the organization named above.

DESCRIPTION.

Age 22 years; height 5 feet 8½ inches.

Complexion Dark

Eyes Dark; hair Dark

Where born Swanzey, Mass.

Occupation Laborer.

ENLISTMENT.

When Aug. 18, 1864.

Where Providence.

By whom A B Chadsey; term 1 y'rs.

Remarks: Volunteer Recruit Mustered Same date place & person, as Enlistment. Clothing drawn $17.00 Bounty drawn $33.33/100; Due $66.66/100. Died June 24, 1865 Post Hospital Carrahear City, La. of Consumption following Syphilis.

O. J. Markle,

(3330) Copyist.

G | 8 H. Art'y. | U.S.C.T.

11 N. Arty, U.S.C.T.

Joseph B. Gardner

Appears with rank of Private on

Muster and Descriptive Roll of a Detachment of U. S. Vols. forwarded

for the 8 Reg't U. S. Col'd H. Art'y. Roll dated

Providence R.I. ~~N.Y.~~ Aug. 19, 1864.

Where born Swansey Mass.

Age 22 y'rs; occupation Farmer

When enlisted Aug. 18, 1864.

Where enlisted Providence R.I.

For what period enlisted 1 years.

Eyes Dark; hair Dark

Complexion Dark; height 5 ft. 8 1/2 in.

When mustered in Aug. 18, 1864.

Where mustered in Providence R.I.

Bounty paid $ 33 33/100; due $ 66 66/100

Where credited Braxton 2d Lieut. D. of R.I.

Company to which assigned A

Remarks:

Book mark:

Calloway.

(339) Copyist.

G | 11 H. Art'y. | U.S.C.T.

Joseph O Gardner

Appears with rank of Pvt on

Muster and Descriptive Roll of a Detachment of U. S. Vols. forwarded

for the 11 Reg't 14 R.I. Vol. H. Art'y U.S.C. H. Art'y Roll dated

Providence R.I., Aug 19, 186 4.

Where born Saratoga Co N.Y.

Age 22 y'rs; occupation Farmer

When enlisted Aug 16, 186 4.

Where enlisted Prov. R.I.

For what period enlisted 1 years.

Eyes dark; hair dark

Complexion dark; height 5 ft. 6½ in.

When mustered in Aug 16, 186 4.

Where mustered in Prov. R.I.

Bounty paid $ 33 33/100; due $ 66 66/100

Where credited 2d Reg't Drill Quarters R.I.

Company to which assigned A

Remarks:

Book mark: Ex. J. S.

Copyist.

G | 11 H. Art'y. | U.S.C.T.

Joseph O Gardner

Appears with rank of Pvt on

Muster and Descriptive Roll of a Detachment of U. S. Vols. forwarded

for the 11 Regt. H.A.U.S. Art'y. Roll dated

New Haven Conn. Sept. 26, 1864.

Where born Swanzy Mass

Age 22 y'rs; occupation Farmer

When enlisted Aug 18, 1864.

Where enlisted Warren R.I.

For what period enlisted 3rd years.

Eyes Dark; hair Dark

Complexion Dark; height 5 ft. 6½ in.

When mustered in Aug 18, 1864.

Where mustered in Warren R.I.

Bounty paid $ 33 33/100; due $ 66 66/100

Where credited Cranston R.I. 2nd Reg. Div

Company to which assigned

Remarks: Recruit

Book mark:

Allen

(339) Copyist.

G. | 8 N. Arty. | U.S.C.T.

Joseph C. Gardner

Pvt., Co. ....., 8 Reg't U. S. Col'd N. Arty

Appears on a

Detachment Muster Roll

of the organization named above

for July & Aug, 1864.

Station New Haven, Conn.

Present or absent Not Stated.

Stoppage, $ 100 for

Due Gov't, $ 100 for

Valuation of horse, $ 100

Valuation of horse equipments, $ 100

Remarks:

Book mark:

(344) J. J. Kearney Copyist.

Co. | 11 H.A. | **U.S.C.T.**

Joseph le. Gardner

Pvt., Co. ....., 11 (8") Reg't U. S. Col'd H.A.

Appears on a

Detachment Muster Roll

of the organization named above

for July 1 1864.

Station New Haven Conn

Present or absent Present

Stoppage, $ ..... 100 for .....

Due Gov't, $ ..... 100 for .....

Valuation of horse, $ 100

Valuation of horse equipments, $ 100

Remarks: .....

Book mark: .....

Holcomb

(844) *Copyist.*

G | 11 H. Art'y. | U.S.C.T.

Joseph C Gardner

Pvt, Co. D, 11 Reg't U. S. Col'd H. Art'y.

Appears on

Company Muster Roll

for Sept 64, 186 4

Present or absent Present

Stoppage, $ 100 for

Due Gov't, $ 100 for

Valuation of horse, $ 100

Valuation of horse equipments, $ 100

Remarks: Joined Co Oct 1 1864

Book mark:

(358) Brudle

Copyist.

G | 11 H. Art'y. | U.S.C.T.

Joseph C. Gardner

Pvt., Co. D, 11 Reg't U. S. Col'd H. Art'y.

Appears on

Company Muster Roll

for Nov. & Dec., 1864.

Present or absent Present

Stoppage, $ 100 for

Due Gov't, $ 100 for

Valuation of horse, $ 100

Valuation of horse equipments, $ 100

Remarks: Joined Co Oct 18 1864 - Free April 19, 1861

Book mark:

Grogan

Copyist.

G | 11 H. Art'y. | U.S.C.T.

Joseph L. Gardner

Pri., Co. D, 11 Reg't U. S. Col'd H. Art'y.

Appears on

Company Muster Roll

for Jan. & Feb., 1865.

Present or absent Present

Stoppage, $.....100 for .....

.....

Due Gov't, $.....100 for .....

.....

Valuation of horse, $.....100

Valuation of horse equipments, $.....100

Remarks: Free April 19, 1861

.....

.....

.....

.....

.....

.....

Book mark: .....

Bryan

(358) *Copyist.*

G | 11 H. Art'y. | U.S.C.T.

Joseph b. Gardner
Priv, Co. D, 11 Reg't U. S. Col'd H. Art'y.

Appears on

Company Muster Roll

for March & April, 1865.

Present or absent Present

Stoppage, $ 100 for

Due Gov't, $ 100 for

Valuation of horse, $ 100

Valuation of horse equipments, $ 100

Remarks:

Book mark:

Brogan

(358) *Copyist.*

G | 11 H. Art'y. | U.S.C.T.

Joseph C. Gardner.

Pvt., Co. D, 11 Reg't U. S. Col'd H. Art'y.

Appears on

Company Muster Roll

for May & June, 1865.

Present or absent.....

Stoppage, $.....100 for .....

.....

.....

Due Gov't, $.....100 for .....

.....

Valuation of horse, $.....100

Valuation of horse equipments, $.....100

Remarks: Died at Post Hospital, Brashear City, La., June 24/65 of Consumption. Clothing for Ordnance 45 & C.S.E. 07

.....

.....

.....

Book mark: 126.286 - P.V.2.P.186.68

(358)

C. F. Thompson.
Copyist.

J | 11 H. Art'y. | U.S.C.T.

Joseph C. Gardner,

Pvt., Co. D, 11 Reg't U. S. Col'd H. Art'y.

Appears on **Co. Muster-out Roll,** dated New Orleans, La., Oct. 2, 1865.

Muster-out to date ....., 186 .

Last paid to ....., 186 .

Clothing account:

Last settled....., 186 ; drawn since $.....100

Due soldier $.....100 ; due U. S. $.....100

Am't for cloth'g in kind or money adv'd $.....100

Due U. S. for arms, equipments, &c., $ 100

Bounty paid $.....100 ; due $.....100

Remarks: Joined as Recruit, Died at Brashear, La. June 24, 1865, Final Statements sent, Free Apr. 1, 1866.

Book mark: 126.286 = P.V.2, P.186.68

C. F. Thompson.

(361) *Copyist.*

Gardner, Joseph C.

P, Co. 20, 11 Reg't U.S.C.H.A.

6 Enclosures.

Bed Cards	Descriptive Lists
Burial Records	Final Statements 2
Certs. of Dis. for Discharge	Furloughs
C. M. Charges	Med. Des. Lists
Med. Certificates Envelope 3	Orders

Other papers relating to—

Admission to Hosp'l	Furlough
Casualty Sheet (Officer's)	Med. Examination
Confinement	Misc. Information
Contracts	Pay or Clothing
Death or Effects /	Personal Reports
Desertions	Rank
Discharge from Hosp'l	Transfer to Hosp'l
Discharge from Service	Transfer to V. R. C.
Duty	Transportation

NOTE 1.—This blank will be used for both enlistments and re-enlistments—enlistment of veterans, &c., &c., in the volunteer service. They will be made out in duplicate in all cases—one to accompany the recruiting return of the superintendent (not the recruiting officer) to the Adjutant General, and one to accompany the account of the officer who pays bounty, &c.

NOTE 2.—A muster-in must, in all cases, be filed in the Adjutant General's Office as evidence of muster-in. The mustering officer, commissary, or assistant commissary of musters, as the case may be, will countersign both enlistments as having mustered the soldier into the service of the United States before either of them is given to the disbursing officer.

DECLARATION OF RECRUIT.

I, Joseph C Gardner (Colrd) one, desiring to VOLUNTEER as a Soldier in the Army of the United States, for the term of ~~THREE~~ YEARS, **Do Declare**, That I am Twenty two (22) years and ..... months of age; that I have never been discharged from the United States service on account of disability or by sentence of a court martial, or by order before the expiration of a term of enlistment; and I know of no impediment to my serving honestly and faithfully as a soldier for ~~three~~ one years.

GIVEN at Providence R I

the 18th day of August 1864.

Witness:

O. Winsor

Joseph C. Gardner

No. 16

Joseph C. Gardner, (Colrd)

Volunteered at Providence R I

August 18th, 1864

By Capt C B. Chadsey.

5th Regiment of U.S. H.A. (Colrd)

Infantry (14th U.S.H.A.)

enlistment; last served in Company ( )

Reg't of .....

Discharged .....

Credited to the State of Connecticut

Out of 16.1.

Paid by Asst Paymaster

CONSENT IN CASE OF MINOR.

I, ..., DO CERTIFY, That I am the ..... of ..... ; that the said ..... is ..... years of age; and I do hereby freely give my CONSENT to his volunteering as a SOLDIER in the ARMY OF THE UNITED STATES for the period of THREE YEARS.

GIVEN at .....

the ..... day of .....

Witness:

.....

.....

(A. G. O. No. 74 & 76.)

VOLUNTEER ENLISTMENT.

STATE OF Rhode Island TOWN OF Providence

I, Joseph C Gardner (Colr'd), born in Swansey in the State of Massachusetts, aged twenty two (22) years, and by occupation a Farmer, DO HEREBY ACKNOWLEDGE to have volunteered this Eighteenth 18th day of August, 1864, to serve as a **Soldier** in the **Army of the United States of America,** for the period of ~~THREE~~ ONE YEAR, unless sooner discharged by proper authority: Do also agree to accept such bounty, pay, rations, and clothing, as are, or may be, established by law for volunteers. And I, Joseph C Gardner, do solemnly swear, that I will bear true faith and allegiance to the ***United States of America,*** and that I will serve them honestly and faithfully against all their enemies or opposers whomsoever; and that I will observe and obey the orders of the President of the United States, and the orders of the officers appointed over me, according to the Rules and Articles of War.

Sworn and subscribed to, at Providence
this 18th day of August, 1864
BEFORE Me A.B. Chadsey
Capt & Pro. Marshall

Joseph C Gardner

I CERTIFY, ON HONOR, That I have carefully examined the above-named Volunteer, agreeably to the General Regulations of the Army, and that, in my opinion, he is free from all bodily defects and mental infirmity, which would in any way disqualify him from performing the duties of a soldier.

F. H. Peckham
2d Dr. S. R.D

EXAMINING SURGEON.

I CERTIFY, ON HONOR, That I have minutely inspected the Volunteer J.C. Gardner previously to his enlistment, and that he was entirely sober when enlisted; that, to the best of my judgment and belief, he is of lawful age; and that, in accepting him as duly qualified to perform the duties of an able-bodied soldier, I have strictly observed the Regulations which govern the recruiting service. This soldier has Dark *eyes,* Dark *hair,* Dark *complexion,* is 5 *feet* 8 1/2 *inches* high.

A.B. Chadsey
Capt & Pro. Mar 2d Dist R.I.
~~Regiment of~~ ~~Volunteers,~~

RECRUITING OFFICER.

(A. G. O. No. 74 & 76.)

Mustered into the service of the United States, for ~~three~~ one year or during the war, from date of enlistment, in Company A, 8th R.I. H.A. Regiment of Volunteers, on the 18th day of August, 1864, at Providence, R.I.

A.B. Chadsey
Capt & Pro. Marshall
2d Dist R.I.

DECLARATION OF RECRUIT.

I, Joseph C Gardner, desiring to VOLUNTEER as a Soldier in the **Army of the United States**, for the term of ~~THREE~~ one YEARS **Do Declare**, That I am twenty two 22 years and ..... months of age; that I have never been discharged from the United States service on account of disability or by sentence of a court martial, or by order before the expiration of a term of enlistment; and I know of no impediment to my serving honestly and faithfully as a soldier for ~~three~~ one years.

GIVEN at Providence

the 18th day of August 1864.

Witness:

O. Wilson

Joseph C. Gardner

No. 61

Joseph C. Gardner (Colored)

Volunteered at Providence R.I.

August 18th, 1864.

To serve One Year

By Capt C.B. Thacker

To the 5th Regiment of U.S.H.A.

Infantry (Colored)

(Co. "H.")

Joseph C. Gardner

Private in Company ( )

Reg't of

Discharged

one year Volunteer

Enlisted the 18th

of August 1864

To serve One Year

Unless sooner

discharged by

Order of the

War Dept.

Corp. C.I.

NOTE 1.—This blank will be used for **both enlistments and re-enlistments—enlistments in all cases**—one to accompany the recruiting return of the superintendent (not the recruiting officer) to the Adjutant General, and one to accompany the account of the officer who pays bounty, &c. The Regiment and Company in which the soldier last served should be given on the back.

NOTE 2.—An enlistment must, in all cases, precede payment of pay, bounty, pension, &c. **A muster-in** must, in all cases, be filed in the Adjutant General's Office as evidence of muster-in. The mustering officer, commissary, or assistant commissary of musters, as the case may be, will countersign both enlistments as having mustered the soldier into the service of the United States before either of them is given to the disbursing officer.

CONSENT IN CASE OF MINOR.

I, ..., DO CERTIFY, That I am the ..... of ..... ; that the said ..... is ..... years of age; and I do hereby freely give my CONSENT to his volunteering as a SOLDIER in the ARMY OF THE UNITED STATES for the period of THREE YEARS.

GIVEN at .....

the ..... day of .....

Witness:

.....

.....

(A. G. O. No. 74 & 76.)

VOLUNTEER ENLISTMENT.

STATE OF Rhode Island TOWN OF Providence (Colr.d)

I, Joseph C. Gardner, born in Swanzey in the State of Massachusetts, aged twenty two (22) years, and by occupation a Farmer, DO HEREBY ACKNOWLEDGE to have volunteered this Eighteenth (18) day of August, 1864, to serve as a **Soldier** in the **Army of the United States of America**, for the period of ~~THREE~~ one YEAR, unless sooner discharged by proper authority: Do also agree to accept such bounty, pay, rations, and clothing, as are, or may be, established by law for volunteers. And I, Joseph C Gardner, do solemnly swear, that I will bear true faith and allegiance to the ***United States of America***, and that I will serve them honestly and faithfully against all their enemies or opposers whomsoever; and that I will observe and obey the orders of the President of the United States, and the orders of the officers appointed over me, according to the Rules and Articles of War.

Sworn and subscribed to, at Providence
this 18th day of August, 1864
BEFORE me A.B. Chadsey
Capt & Pro Mar Shall

Joseph C Gardner

I CERTIFY, ON HONOR, That I have carefully examined the above-named Volunteer, agreeably to the General Regulations of the Army, and that, in my opinion, he is free from all bodily defects and mental infirmity, which would in any way disqualify him from performing the duties of a soldier.

F. H. McKlyer
2d Dist R I

EXAMINING SURGEON.

I CERTIFY, ON HONOR, That I have minutely inspected the Volunteer J.C. Gardner previously to his enlistment, and that he was entirely sober when enlisted; that, to the best of my judgment and belief, he is of lawful age; and that, in accepting him as duly qualified to perform the duties of an able-bodied soldier, I have strictly observed the Regulations which govern the recruiting service. This soldier has Dark eyes, Dark hair, Dark complexion, is 5 feet 8 1/2 inches high.

A.B. Chadsey
Capt & Pro Mar 2nd Dist R.I.

~~Regiment of~~ ~~Volunteers,~~

(A. G. O. No. 74 & 76.)

RECRUITING OFFICER.

Mustered into the service of the United States, for ~~three~~ one year, in Company A, 8th R.I. Regiment of Heavy Art'y, Volunteers, on the 18th day of August, 1864, at Providence R.I.

A.B. Chadsey
Capt & Pro Mar
2nd Dist R.I.

Copy

DECLARATION OF RECRUIT.

I, Joseph C Gardner, desiring to VOLUNTEER as a Soldier in the **Army of the United States**, for the term of ~~THREE~~ one YEARS, **Do Declare**, That I am Twenty two (22) years and ..... months of age; that I have never been discharged from the United States service on account of disability or by sentence of a court martial, or by order before the expiration of a term of enlistment; and I know of no impediment to my serving honestly and faithfully as a soldier for ~~three~~ one Years.

GIVEN at Providence

the 18th day of August 1864

Witness:

O Winsor

Joseph C Gardner

Enlisted as a Pvt. Co. "I" 8th R.I. Vols.
No. .....
Joseph C. Gardner (Colin)
Joseph C. Gardner (Colin)
Volunteered at Providence
Aug 18th, 1864,
By Capt A.B. Chace
8th Regiment of U.S.H.A. (Colrd)
formerly (4th R.I.H.A.)
Sth U.S.A.

(*) Number of enlistment; last served in Company, Regiment, Corps, Ship, or Battery.

Reg't of .....

Discharged ....., 18 .

Credited to the Town of Cranston
for Quota of .....

CONSENT IN CASE OF MINOR.

I, ..., DO CERTIFY, That I am the ..... of ..... ; that the said ..... is ..... years of age; and I do hereby freely give my CONSENT to his volunteering as a SOLDIER in the ARMY OF THE UNITED STATES for the period of THREE YEARS.

GIVEN at .....

the ..... day of .....

Witness:

.....

.....

(A. G. O. No. 74 & 76.)

NOTE 1.—This blank will be used for both enlistments and re-enlistments—enlistment of veterans, &c., &c., in the volunteer service. They will be made out in duplicate in all cases—one to accompany the recruiting return of the superintendent (not the recruiting officer) to the Adjutant General, and one to accompany the accounts of the officer who pays bounty, &c. The Regiment and Company in which the soldier last served should be given on the back.

NOTE 2.—An enlistment holds to service. A muster-in must, in all cases, precede payment of pay, bounty, pension, &c. A muster-in roll must, in the Adjutant General's Office as evidence of muster-in. The mustering officer, commissary, or assistant commissary of musters, as the case may be, will countersign both enlistments as having mustered the soldier into the service of the United States before either of them is given to the disbursing officer.

VOLUNTEER ENLISTMENT.

STATE OF Rhode Island TOWN OF Providence

I, Joseph C Gardner (Colr) , born in Swansey
in the State of Massachusetts , aged twenty two (22) years,
and by occupation a Farmer . Do hereby acknowledge to have
volunteered this Eighteenth (18th) day of August , 1864,
to serve as a **Soldier** in the **Army of the United States of America,** for
the period of ~~THREE~~ one YEARS, unless sooner discharged by proper authority:
Do also agree to accept such bounty, pay, rations, and clothing, as are, or may be,
established by law for volunteers. And I, Joseph C. Gardner , do
solemnly swear, that I will bear true faith and allegiance to the ***United States of America,*** and that I will serve them honestly and faithfully against all
their enemies or opposers whomsoever; and that I will observe and obey the
orders of the President of the United States, and the orders of the officers
appointed over me, according to the Rules and Articles of War.

Sworn and subscribed to, at Providence
this 18th day of August, 1864 } Joseph C Gardner
Before me A.B. Chadsey
Capt & Pro. Mar

I CERTIFY, ON HONOR, That I have carefully examined the above-named Volunteer, agreeably to the General Regulations of the Army, and that, in my opinion, he is free from all bodily defects and mental infirmity, which would in any way disqualify him from performing the duties of a soldier.

F. H. Peckham
24 Dist. R.I.

Examining Surgeon.

I CERTIFY, ON HONOR, That I have minutely inspected the Volunteer J.C. Gardner previously to his enlistment, and that he was entirely sober when enlisted; that, to the best of my judgment and belief, he is of lawful age; and that, in accepting him as duly qualified to perform the duties of an able-bodied soldier, I have strictly observed the Regulations which govern the recruiting service. This soldier has Dark *eyes,* Dark *hair,* Dark *complexion,* is 5 *feet* 8 1/2 *inches* high.

A.B. Chadsey
Capt & Pro. Mar 2d Dist R. I.
Regiment of ..... *Volunteers,*

Recruiting Officer.

(A. G. O. No. 71 & 76.)

Mustered into the service of the United States, for ~~three~~ one years or during the war, from date of enlistment in Company F, 7th R.I. H.A. Regiment of Heavy Artillery Volunteers, on the 18th day of August, 1864, at Providence R.I.

A.B. Chadsey
Capt & Pro. Mar
2d Dist R.I.

ARTICLES OF WAR.

ART. 95. When any non-commissioned officer or soldier shall die, or be killed in the service of the United States, the then commanding officer of the troop or company shall, in the presence of two other commissioned officers, take an account of what effects he died possessed of, above his arms and accoutrements, and transmit the same to the office of the Department of War, which said effects are to be accounted for, and paid to the representatives of such deceased non-commissioned officer or soldier. And in case any of the officers, so authorized to take care of the effects of deceased officers and soldiers, should, before they have accounted to their representatives for the same, have occasion to leave the regiment or post, by preferment or otherwise, they shall, before they be permitted to quit the same, deposit in the hands of the commanding officer, or of the assistant military agent, all the effects of such deceased non-commissioned officers and soldiers, in order that the same may be secured for, and paid to, their respective representatives.

ARMY REGULATIONS—EDITION OF 1863.

DECEASED SOLDIERS.

Par. 152. Inventories of the effects of deceased non-commissioned officers and soldiers, required by the 95th Article of War, will be forwarded to the Adjutant General, by the commander of the company to which the deceased belonged, and a duplicate of the same to the colonel of the regiment. Final statements of pay, clothing, &c., in duplicate, will be sent to the Adjutant General with one copy of the inventory. When a soldier dies at a post or station absent from his company, it will be the duty of his immediate commander to furnish the required inventory and final statements, and, at the same time, to forward to the commanding officer of the company to which the soldier belonged, a report of his death, specifying the date, place, and cause; to what time he was last paid, and the money or other effects in his possession at the time of his decease; which report will be noted on the next muster roll of the company to which the man belonged. Each inventory will be endorsed. "Inventory of the effects of ——— ———, late of company (—,) ——— regiment of ———, who died at ———, the —— day of ———, 186–." If a legal representative receive the effects, it will be stated in the report. If the soldier leave no effects, the fact will be reported.

Par. 153. Should the effects of a deceased non-commissioned officer or soldier not be administered upon within a short period after his decease, they shall be disposed of by a Council of Administration, under the authority of the commanding officer of the post, and the proceeds deposited with the Paymaster, to the credit of the United States, until they shall be claimed by the legal representatives of the deceased.

Par. 154. In all such cases of sales by the Council of Administration, a statement in detail, or account of the proceeds, duly certified by the Council and commanding officer, accompanied by the Paymaster's receipt for the proceeds, will be forwarded by the commanding officer to the Adjutant General. The statement will be endorsed, "Report of the proceeds of the effects of ——— ———, late of company (—,) ——— regiment of ———, who died at ———, the —— day of ———, 186–."

NOTE 1.—The effects in all cases, when called for, should be turned over to the legal representative, without further authority from the Adjutant General. When the effects are turned over to the relatives of the deceased before these inventories are sent to the Adjutant General, their receipts therefor should be attached to the inventories. In all other cases, one copy will be sent with a letter of transmittal direct to the Adjutant General, and a duplicate retained by the officer.

NOTE 2.—Particular care should be taken to take receipts in duplicate from the Paymaster for any funds turned over to him; one copy should be sent direct to the Adjutant General and one retained by the officer.

INVENTORY OF THE EFFECTS

OF

Joseph C Gardner

Late of Company D

11 Reg't of Md Cavalry

Volunteers, who died at Baltimore

on the 24 *day of* June 1865.

Inventory of the effects of Joseph C. Gardner late a Private of Captain Jas. McCaleb Jr's Company D of the 11th Regiment of M. F. C., La. Vy Volunteers, who was enrolled as a ____ at ____ in the State of ____ on the ____ day of ____ 186 , and mustered into the service of the United States as a Recruit on the 18 day of August 1864 at Tangipahoa in Company D, 11th Regiment of M F C Artly Volunteers, to serve One years ~~or during the war~~; he was born in Tuscaloosa in the State of Mass; he was 22 years of age, 5 feet 8½ inches high, dark complexion, dark eyes, dark hair, and by occupation, when enrolled, a Labourer; he died in Post Hospital, at Brashear City La on the 24 day of June 1865, by reason of Consumption

INVENTORY.

Articles.	No.	Articles.	No.	Articles.	No.
Hats	1	Pairs trowsers	1	Knapsacks	
Caps		Pairs flannel drawers			
Forage caps		Pairs cotton drawers			
Great coats		Flannel shirts			
Uniform coats		Cotton shirts			
Uniform jackets		Pairs boots			
Flannel sack coats	1	Pairs shoes			
Blouses		Pairs socks			
Stable frocks		Blankets			
Fatigue overalls		Haversacks			

Money.		
	Specie	$
	Notes	$ none

I CERTIFY, ON HONOR, that the above inventory comprises all the effects of Jos C. Gardner, deceased, and that the effects are in the hands of ____ at ____ to be disposed of by a Council of Administration.

(DUPLICATES.)

Jas McCaleb Jr
Capt. M F C Artly
Commanding the Company.

STATION: Brashear La

DATE: June 29th 1865

[A. G. O. No. 104.]

Extract from Act of Congress.

SEC. 12. *And be it further enacted*, That the fees of agents and attorneys for making out and causing to be executed the papers necessary to establish a claim for a pension, bounty, and other allowance before the Pension Office, under this act, shall not exceed the following rates: For making out and causing to be duly executed a declaration by the applicant, with the necessary affidavits, and forwarding the same to the Pension Office, with the requisite correspondence, ten dollars; which sum shall be received by such agent or attorney in full for all services in obtaining such pension, and shall not be demanded or received, in whole or in part, until such pension shall be obtained; and the sixth and seventh sections of an act entitled "An act to grant pensions," approved July [fourteenth,] eighteen hundred and sixty-two, are hereby repealed.

SEC. 13. *And be it further enacted*, That any agent or attorney who shall, directly or indirectly, demand or receive any greater compensation for his services under this act than is prescribed in the preceding section of this act, or who shall contract or agree to prosecute any claim for a pension, bounty, or other allowance under this act, on the condition that he shall receive a per centum upon any portion of the amount of such claim, or who shall wrongfully withhold from a pensioner or other claimant the whole or any part of the pension or claim allowed and due to such pensioner or claimant, shall be deemed guilty of a high misdemeanor, and, upon conviction thereof, shall, for every such offense, be fined not exceeding three hundred dollars, or imprisoned at hard labor not exceeding two years, or both, according to the circumstances and aggravations of the offense.

Approved July 4, 1864.

NOTE 10.—If any soldier is charged a higher fee than that allowed by the above act, he should report the fact and the name of the agent to the Adjutant General, in order that steps may be taken to have the same refunded.

ADJUTANT GENERAL'S OFFICE.
July 19 1865.
Duplicate with Inventory rec'd 2d Auditor.

FINAL STATEMENT

OF

Joseph C Gardner

11 Reg't of C Cavalry

VOLUNTEERS.

For pay from 24 1863

NOTE 1.—*Two* of these certificates (or duplicates) are to be given to each Volunteer Soldier or drafted man who may be discharged without being mustered out, (Final Statements are never given to men mustered out of service,) that he may at once receive from the Paymaster the pay, &c., due him, and the captain or other COMMISSIONED officer commanding the company will certify to the act of the delivery of the duplicate certificates; with these certificates the Soldier is "entitled to" his *discharge*, and should also present his discharge to the Paymaster to have the payment endorsed on it. The discharge is to be given back to the Soldier by the Paymaster; the latter only retaining as his vouchers the duplicate certificates.

NOTE 2.—If the Soldier is entitled to pay for the use of his horse, the Company Commander will certify to that fact on the back of both these final statements, and also to the time he has pay due for having been so mounted on his own horse.

NOTE 3.—When a Soldier is furnished with final statements, his descriptive list, if he has one, should be taken up by the officer who gives the Soldier these statements, and endorsed with a statement to this effect by the officer. The endorsement should exhibit a full statement of the time for which the Soldier was allowed pay on his final statements, the clothing account, and all other charges against him or in his favor, so as to comprise a complete exhibit of his account. It will then be transmitted to the Company Commander of the Soldier, who will enter all the data necessary to a full understanding of the Soldier's account on the muster roll upon which the Soldier's discharge is reported. The descriptive list will then be destroyed. The object of this is, that the remaining portion of the Soldier's account may be settled upon the receipt of these muster rolls, and the Soldier receive any pay or allowances that may be due him at the time of his discharge, and which may not appear on his last final statements from the fact that his descriptive list is incomplete. These accounts for back pay, &c., are settled by the 2d Auditor of the Treasury Department.

NOTE 4.—Charges for loss or injury to ordnance, horse equipments, and other miscellaneous charges, should appear under the heading of "Other Stoppages."

NOTE 5.—Bounty paid by State authorities, and not by the United States, will not be entered on this statement.

NOTE 6.—Amounts due the Sutler and Laundress must be entered on the muster roll on which the discharge, death, desertion, &c., is reported, as well as on the final statement, otherwise the amount cannot be collected from the United States.

NOTE 7.—This blank will be used for deceased volunteers and drafted men, as well as for others.

NOTE 8.—Where a Soldier dies in Hospital or on detached service, his descriptive list, if he has one, should be sent with his final statements, in duplicate, to the Adjutant General, Washington, D. C.

NOTE 9.—If the soldier is a drafted man or substitute, the space for time, &c., of enrolled, should contain only the word *drafted* or *substitute*, as the case may be. If the Soldier is a "VETERAN," (or RECRUIT,) the words *as a veteran*, (or *recruit*,) as the case may be, should be interlined after the words *mustered into the service of the U. S.* A statement of all the installments of *Veteran* or ~~*Recruit bounty*~~ RECEIVED by the Soldier must be made on the back of each final statement.

I certify, on honor, that Joseph L Gardner, a Private of Captain Jos Mcleaf Jr Company (D) of the 11th Regiment of Mass Cavalry VOLUNTEERS, of the State of _____, born in Swansey, State of Mass, aged 22 years; 5 feet 8½ inches high; dark complexion, dark eyes, dark hair, and by occupation a Laborer, who joined for service and was enrolled (see Note 9) on the _____ day of _____, 186 , at _____ by _____, for the period of one years, and mustered into the service of the United States as a recruit on the 18th day of August, 1864, at Providence, by A B Chadsey; and having served HONESTLY and FAITHFULLY with his Company to the present date, is now entitled to a DISCHARGE by reason of Death at Brashear City La June 24 1865 of Consumption

The said Joseph C Gardner was ~~last paid by Paymaster~~ Never Paid, to ~~include the~~ date of ~~day~~ of Enlistment, 186 , and has pay due him from that time to the present date; he is entitled to pay and subsistence for TRAVELING to place of enrollment, and whatever other allowances are authorized to volunteer soldiers, drafted men, or militia, so discharged. He has received from the United States CLOTHING amounting to Fifty and 11/100 dollars, since the 18th day of August, 186 , when his clothing account was last settled. He has received from the United States 33.33/100 dollars advanced BOUNTY.

There is to be stopped from him, on account of the State of X, or other authorities, for CLOTHING, &c., received on entering service, X/100 dollars; and for other stoppages, viz: Ordnance 45 Camp & Garrison Eq[uipage] 57 Amounting to .52/100 dollars.

He has been furnished with TRANSPORTATION in kind from the place of his discharge to X; and he has been SUBSISTED for TRAVELING to his place of enrollment, up to the X 186 .

He is indebted to John L Lake Jr Post Sutler, for Boots 7.50/100 dollars.
He is indebted to John M Letana Sutler, LAUNDRESS, for 5. " /100 dollars.

Given in Duplicate, at Brashear City La, this 29 day of June, 1865.

This Soldier is not discharged.

Jos Mcleaf Jr
Capt. 11 Mass Cavalry
Commanding Company.

[A. G. O No. 95—First.]

Extract from Act of Congress.

SEC. 12. *And be it further enacted*, That the fees of agents and attorneys for making out and causing to be executed the papers necessary to establish a claim for a pension, bounty, and other allowance before the Pension Office, under this act, shall not exceed the following rates: For making out and causing to be duly executed a declaration by the applicant, with the necessary affidavits, and forwarding the same to the Pension Office, with the requisite correspondence, ten dollars; which sum shall be received by such agent or attorney in full for all services in obtaining such pension, and shall not be demanded or received, in whole or in part, until such pension shall be obtained; and the sixth and seventh sections of an act entitled "An act to grant pensions," approved July [fourteenth,] eighteen hundred and sixty-two, are hereby repealed.

SEC. 13. *And be it further enacted*, That any agent or attorney who shall, directly or indirectly, demand or receive any greater compensation for his services under this act than is prescribed in the preceding section of this act, or who shall contract or agree to prosecute any claim for a pension, bounty, or other allowance under this act, on the condition that he shall receive a per centum upon any portion of the amount of such claim, or who shall wrongfully withhold from a pensioner or other claimant the whole or any part of the pension or claim allowed and due to such pensioner or claimant, shall be deemed guilty of a high misdemeanor, and, upon conviction thereof, shall, for every such offense, be fined not exceeding three hundred dollars, or imprisoned at hard labor not exceeding two years, or both, according to the circumstances and aggravations of the offense.

Approved July 4, 1864.

NOTE 10.—If any soldier is charged a higher fee than that allowed by the above act, he should report the fact and the name of the agent to the Adjutant General, in order that steps may be taken to have the same refunded.

4

FINAL STATEMENT

OF

Jas. O. Graves

11 Reg't of Vols

VOLUNTEERS.

NOTE 1.—*Two* of these certificates (or duplicates) are to be given to each Volunteer Soldier or drafted man who may be discharged without being mustered out, (Final Statements are never given to men mustered out of service,) that he may at once receive from the Paymaster the pay, &c., due him, and the captain or other COMMISSIONED officer commanding the company will certify to the act of the delivery of the duplicate certificates; with these certificates the Soldier is "entitled to" his *discharge*, and should also present his discharge to the Paymaster to have the payment endorsed on it. The discharge is to be given back to the Soldier by the Paymaster; the latter only retaining as his vouchers the duplicate certificates.

NOTE 2.—If the Soldier is entitled to pay for the use of his horse, the Company Commander will certify to that fact on the back of both these final statements, and also to the time he has pay due for having been so mounted on his own horse.

NOTE 3.—When a Soldier is furnished with final statements, his descriptive list, if he has one, should be taken up by the officer who gives the Soldier these statements, and endorsed with a statement to this effect by the officer. The endorsement should exhibit a full statement of the time for which the Soldier was allowed pay on his final statements, the clothing account, and all other charges against him or in his favor, so as to comprise a complete exhibit of his account. It will then be transmitted to the Company Commander of the Soldier, who will enter all the data necessary to a full understanding of the Soldier's account on the muster roll upon which the Soldier's discharge is reported. The descriptive list will then be destroyed. The object of this is, that the remaining portion of the Soldier's account may be settled upon the receipt of these muster rolls, and the Soldier receive any pay or allowances that may be due him at the time of his discharge, and which may not appear on his last final statements from the fact that his descriptive list is incomplete. These accounts for back pay, &c., are settled by the 2d Auditor of the Treasury Department.

NOTE 4.—Charges for loss or injury to ordnance, horse equipments, and other miscellaneous charges, should appear under the heading of "Other Stoppages."

NOTE 5.—Bounty paid by State authorities, and not by the United States, will not be entered on this statement.

NOTE 6.—Amounts due the Sutler and Laundress must be entered on the muster roll on which the discharge, death, desertion, &c., is reported, as well as on the final statement, otherwise the amount cannot be collected from the United States.

NOTE 7.—This blank will be used for deceased volunteers and drafted men, as well as for others.

NOTE 8.—Where a Soldier dies in Hospital or on detached service, his descriptive list, if he has one, should be sent with his final statements, in duplicate, to the Adjutant General, Washington, D. C.

NOTE 9.—If the soldier is a drafted man or substitute, the space for time, &c., of enrolled, should contain only the word *drafted* or *substitute*, as the case may be. If the Soldier is a "VETERAN," (or RECRUIT,) the words *as a veteran*, (or *recruit*,) as the case may be, should be interlined after the words *mustered into the service of the U. S.* A statement of all the installments of *Veteran* or *Recruit Bounty* RECEIVED by the Soldier must be made on the back of each final statement.

1865

Recd R. H. 2d. July 4. 1865

I certify, on honor, that Joseph C Gardner, a Private of Captain Jos Murray Jr's Company (E) of the 11th Regiment of M.V.C.A. Hy. VOLUNTEERS, of the State of _____, born in Swansey, State of Mass., aged 22 years; 5 feet 8½ inches high; dark complexion, dark eyes, dark hair, and by occupation a Laborer, who joined for service and was enrolled (see Note 9) on the _____ day of _____, 186 , at _____ by _____, for the period of ONE years, and mustered into the service of the United States as a recruit on the 18th day of August, 1864, at Providence, by Lieut Chadwick; and having served HONESTLY and FAITHFULLY with his Company to the present date, is now entitled to a DISCHARGE by reason of Death at Baton Rouge La June 24th 1865 of Consumption

The said Joseph C Gardner was last paid by Paymaster Never paid, to include the _____ day of _____, 186 , and has pay due him from that time to the present date; he is entitled to pay and subsistence for TRAVELING to place of enrollment, and whatever other allowances are authorized to volunteer soldiers, drafted men, or militia, so discharged. He has received from the United States CLOTHING amounting to Fifty (50) 11/100 dollars, since the 18th day of August, 1864, when his clothing account was last settled. He has received from the United States 300.33/100 dollars advanced BOUNTY.

There is to be stopped from him, on account of the State of _____, or other authorities, for CLOTHING, &c., received on entering service, _____ 100 dollars; and for other stoppages, viz: Extra Stars 1.50 Camp Equip. 2.83

Amounting to 4.33 100 dollars.

He has been furnished with TRANSPORTATION in kind from the place of his discharge to _____; and he has been SUBSISTED for TRAVELING to his place of enrollment, up to the _____, 186 .

He is indebted to Jno. S. Tabor Jr., SUTLER, 18. 00/100 dollars.

He is indebted to John McElana, Sutler, LAUNDRESS, 5 — 100 dollars.

Given in Duplicate, at Baton Rouge (City) La, this 29 day of June, 1865.

This Discharge is not to be given to the Commanding Company.

[A. G. O. No. 95—First.]

____, 11 U.S.Col'd H.Art'y.

Private | Private

CARD NUMBERS.

818 1184	26
818 1197	27
	28
	29
	30
	31
	32
	33
	34
	35
	36
	37
	38
	39
	40
	41
	42
	43
	44
	45
	46
	47
	48
	49
	50

Book Mark: _____

See also _____

G | 11 H. Art'y. | U.S.C.T.

Marcellus F. Gardner

Appears with rank of Pvt on

Muster and Descriptive Roll of a Detachment of U. S. Vols. forwarded

for the 11 Reg't H.A. Art'y. Roll dated

Augusta Me June 14, 1864.

Where born St. Johns N. B.

Age 19 y'rs; occupation Seaman

When enlisted June 4, 1864.

Where enlisted Augusta Me

For what period enlisted 3 years.

Eyes Blk.; hair Blk.

Complexion Blk; height 5 ft. 4 1/2 in.

When mustered in June 5, 1864.

Where mustered in

Bounty paid $ 100; due $ 100

Where credited Litchfield 2d Distr. Me

Company to which assigned

Remarks: Recruit

Not to be carried on rolls of regt

Book mark:

Clerk

Copyist.

L | 11 H. Art'y. | U.S.C.T.

Marcellus Gardner

Appears with rank of Pvt on

Muster and Descriptive Roll of a Detachment of U. S. Vols. forwarded

for the 11 Reg't (4 R.I. Coll Hart) Hvy Art'y. Roll dated

Augusta Me, Jany 4, 1864.

Where born St. John's N. B.

Age 19 y'rs; occupation Seaman

When enlisted Jany 4, 1864.

Where enlisted Augusta Me

For what period enlisted 3 years.

Eyes Blk; hair Blk

Complexion Blk; height 5 ft. 4 in.

When mustered in Jany 5, 1864.

Where mustered in

Bounty paid $ 100; due $ 100

Where credited Litchfield Me 2d Dist.

Company to which assigned

Remarks: Raw recruit

Book mark:

Allen

(339) *Copyist.*

11 N.H.V.H.

Gardner, Marcellus R.

——, ——, 14 Reg't N.H.V.H.

2 Enclosures.

Bed Cards	Final Statements
Burial Records	Furloughs or L. of A
Certs. of Dis. for Discharge	Med. Certificates
C. M. Charges	Med. Des. Lists
Descriptive Lists	Orders
Discharge Certificates	Pris. of War Record
Enlistment Papers 2	Resignations

Other papers relating to—

Admission to Hosp'l	Furlough or L. of A
Casualty Sheet	Med. Examination
Confinement	Misc. Information
Contracts	Pay or Clothing
Death or Effects	Personal Reports
Desertion	Rank
Discharge from Hosp'l	Transfer to Hosp'l
Discharge from Service	Transfer to V. R. C.
Duty	Transportation

DECLARATION OF RECRUIT.

I, Marcellus R. Gardner, desiring to VOLUNTEER as a Soldier in the **Army of the United States**, for the term of THREE YEARS, **Do Declare**, That I am Nineteen years and Four months of age; that I have never been discharged from the United States service on account of disability or by sentence of a court-martial, or by order before the expiration of a term of enlistment; and I know of no impediment to my serving honestly and faithfully as a soldier for three years.

GIVEN at Augusta, Maine
the Fourth day of January, 1864.

Witness:
Virgil True
Recruiting Officer

No. 2

Volunteered at Augusta Me. Jan 4 1864

By [illegible]

Regiment of [illegible]

enlistment; last served in Company (—)

Reg't of [illegible]

Discharged [illegible] 18—.

CONSENT IN CASE OF MINOR.

I, Zina H Lowery DO CERTIFY, That I am the Guardian of Marcellus R. Gardner that the said Marcellus R. Gardner is Nineteen years of age; and I do hereby freely give my CONSENT to his volunteering as a SOLDIER in the ARMY OF THE UNITED STATES for the period of THREE YEARS.

GIVEN at Augusta, Maine.
the Fourth day of January, 1864.

Witness:
Virgil True
Zina H Lowery

(A. G. O. No. 74 & 75.)

NOTE 1.—This blank will be used for both enlistments and re-enlistments—enlistment of veterans, &c., &c., in the volunteer service. They will be made out in duplicate in all cases—one to accompany the return of the superintendent (not the recruiting officer) to the Adjutant General, and one to accompany the accounts of the officer who pays bounty, &c. The Regiment and Company in which the soldier last served should be given on the back.

NOTE 2.—An enlistment holds to service. A muster-in must, in all cases, precede payment of pay, bounty, pension, &c. A muster-in roll must, in all cases, be filed in the Adjutant General's Office as evidence of muster-in. The mustering officer, commissary, or assistant commissary of musters, as the case may be, will countersign both enlistments as having mustered the soldier into the service of the United States before either of them is given to the disbursing officer.

(Privates of Litchfield.)

VOLUNTEER ENLISTMENT.

STATE OF *Maine* TOWN OF *Augusta*

I, *Marcellus C. Gardner* born in *St. Johns* in ~~the State of~~ *New Brunswick*, aged *Nineteen* years, and by occupation a *Seaman*. Do HEREBY ACKNOWLEDGE to have volunteered this *Fourth* day of *January* 1864, to serve as a ***Soldier*** in the **Army of the United States of America,** for the period of *THREE YEARS*, unless sooner discharged by proper authority: Do also agree to accept such bounty, pay, rations, and clothing, as are, or may be, established by law for volunteers. And I, *Marcellus C. Gardner* do solemnly swear, that I will bear true faith and allegiance to the ***United States of America,*** and that I will serve them honestly and faithfully against all their enemies or opposers whomsoever; and that I will observe and obey the orders of the President of the United States, and the orders of the officers appointed over me, according to the Rules and Articles of War.

Sworn and subscribed to, at *Augusta Me*
this *5th* day of *January* 1864,
BEFORE *C. A. Allen*
} *Marcellus C. Gardner*

Captain and Provost Marshal 2d District of Maine

I CERTIFY, ON HONOR, That I have carefully examined the above-named Volunteer, agreeably to the General Regulations of the Army, and that, in my opinion, he is free from all bodily defects and mental infirmity, which would in any way disqualify him from performing the duties of a soldier.

C. A. Allen
2d District of Maine
EXAMINING SURGEON.

I CERTIFY, ON HONOR, That I have minutely inspected the Volunteer, *Marcellus C. Gardner* previously to his enlistment, and that he was entirely sober when enlisted; that, to the best of my judgment and belief, he is of lawful age; and that, in accepting him as duly qualified to perform the duties of an able-bodied soldier, I have strictly observed the Regulations which govern the recruiting service. This soldier has *Black* *eyes*, *Black* *hair*, *Colored* *complexion*, is *Five* *feet* *Four* ½ *inches* high.

C. A. Allen

..... *Regiment of* ..... *Volunteers,*

RECRUITING OFFICER.

Captain & Provost Marshal 2d Distinct of Maine

(A. G. O. No. 74 & 76.)

NOTE.—The Recruiting Officer will here enter the soldier's residence, and state whether *married or single.

This soldier is a resident of *Litchfield*, and is * *Single*.

Mustered into the service of the United States, in Company ....., Regiment of ....., Volunteers, on the ..... day of ....., 186 , at .....

NOTE 1.—This blank will be used for both enlistments and re-enlistments—enlistment of veterans, &c., &c., in the volunteer service. They will be made out in duplicate in all cases—one to accompany the return of the superintendent (not the recruiting officer) to the Adjutant General, and one to accompany the accounts of the officer who pays bounty, &c. The enlistment and Company in which the soldier last served should be given on the back.

NOTE 2.—An enlistment holds to service. A muster-in must, in all cases, precede payment of pay, bounty, pension, &c. A muster-in roll must, in all cases, be filed in the Adjutant General's Office as evidence of muster-in. The mustering officer, commissary, or assistant commissary of musters, as the case may be, will countersign both enlistments as having mustered the soldier into the service of the United States before either of them is given to the disbursing officer.

DECLARATION OF RECRUIT.

I, Marcellus C. Gardner desiring to VOLUNTEER as a Soldier in the **Army of the United States**, for the term of THREE YEARS, **Do Declare**, That I am Nineteen years and Four months of age; that I have never been discharged from the United States service on account of disability or by sentence of a court-martial, or by order before the expiration of a term of enlistment; and I know of no impediment to my serving honestly and faithfully as a soldier for three years.

GIVEN at Augusta, Maine

the Fourth day of January, 1864.

Witness:

Virgil True

Marcellus C Gardner

No. [illegible]

[illegible]

Volunteered at [illegible]

[illegible]

By [illegible]

[illegible] Regiment of [illegible]

[illegible]

[illegible] enlistment; last served in Company (—)

[illegible] Reg't of [illegible]

Discharged [illegible]

18—.

CONSENT IN CASE OF MINOR.

I, Gina H. Lewis, DO CERTIFY, That I am the Guardian of Marcellus C. Gardner that the said Marcellus C. Gardner is Nineteen years of age; and I do hereby freely give my CONSENT to his volunteering as a SOLDIER in the ARMY OF THE UNITED STATES for the period of THREE YEARS.

GIVEN at Augusta Maine.

the Fourth day of January, 1864.

Witness:

Virgil True

Gina H Lewis

(A. G. O. No. 74 & 75.)

(Quota of Litchfield)

VOLUNTEER ENLISTMENT.

STATE OF Maine TOWN OF Augusta

I, Marcellus R. Gardner born in St. Johns in ~~the State of~~ New Brunswick aged Nineteen years, and by occupation a Seaman. Do HEREBY ACKNOWLEDGE to have volunteered this Fourth day of January 1864, to serve as a **Soldier** in the **Army of the United States of America,** for the period of *THREE YEARS* unless sooner discharged by proper authority: Do also agree to accept such bounty, pay, rations, and clothing, as are, or may be, established by law for volunteers. And I, Marcellus R. Gardner do solemnly swear, that I will bear true faith and allegiance to the ***United States of America,*** and that I will serve them honestly and faithfully against all their enemies or opposers whomsoever; and that I will observe and obey the orders of the President of the United States, and the orders of the officers appointed over me, according to the Rules and Articles of War.

Sworn and subscribed to, at Augusta Me
this 5-7 day of January 1864, } mercelles r gardiner
BEFORE [signature]
Captain and Provost Marshal 3d District of Maine

I CERTIFY, ON HONOR, That I have carefully examined the above-named Volunteer, agreeably to the General Regulations of the Army, and that, in my opinion, he is free from all bodily defects and mental infirmity, which would in any way disqualify him from performing the duties of a soldier.

[signature]
3d District of Maine
EXAMINING SURGEON.

I CERTIFY, ON HONOR, That I have minutely inspected the Volunteer, Marcellus R. Gardner, previously to his enlistment, and that he was entirely sober when enlisted; that, to the best of my judgment and belief, he is of lawful age; and that, in accepting him as duly qualified to perform the duties of an able-bodied soldier, I have strictly observed the Regulations which govern the recruiting service. This soldier has Black *eyes,* Black *hair,* Colored *complexion,* is Five *feet* Four 1/2 *inches* high.

[signature]
..... *Regiment of* ..... *Volunteers,*
RECRUITING OFFICER.

(A. G. O. No. 74 & 76.)

Captain & Provost Marshal
3d District of Maine

NOTE.—The Recruiting Officer will here enter the soldier's residence, and state whether *married or single.

This soldier is a resident of Litchfield and is * Single

Mustered into the service of the United States, in Company ..... Regiment of ..... Volunteers, on the ..... day of ....., 186 , at .....

5 U.S. Col'd Inf'y.

Co.	Co.

CARD NUMBERS.

1 16199739	26
2 16199900	27
3 16200056	28
4 16200204	29
5 16200346	30
6 16200484	31
7 16200613	32
8 16200743	33
9 16200873	34
10 16200996	35
11 16201120	36
12 16201233	37
13 9125790	38
14	39
15	40
16	41
17	42
18	43
19	44
20	45
21	46
22	47
23	48
24	49
25	50

Book Mark:

See also

A/9/26/5 P.O. Mtgs

S-2849866 And. W.D.

S-2957553 PO Coff

S3033464 Coff

Panic of 1692 11/9/14 7th

S.S. 7-17-16 J

J B Dowd

Ex

G | 11 H. Art'y. | U.S.C.T.

Thomas E. Gardiner

, Co. L, 11 Reg't U. S. Col'd H. Art'y.

Appears on

Company Descriptive Book

of the organization named above.

DESCRIPTION.

Age 18 years; height 5 feet 1 3/4 inches.

Complexion African

Eyes Dk; hair Dk

Where born Montrose Penn

Occupation Farmer

ENLISTMENT.

When Dec 14, 1863.

Where Prov R I

By whom J. B. Engly; term 3 y'rs.

Remarks: Mustered out Oct 2' 1865

Griffith

& | 11 H. Art'y. | U.S.C.T.

Thomas E Gardner

pvt., Co. L, 14 Reg't R. I. Col'd H. Art'y.*

Age 18 years.

Appears on

Company Muster-in Roll

of the organization named above. Roll dated Camp Mt Pleasant, R.I. Dec 31, 1863.

Muster-in to date Dec 31, 1863.

Joined for duty and enrolled:

When Dec 14, 1863.

Where Providence R.I.

Period 3 years.

Valuation of horse, $ 100

Valuation of horse equipments, $ 100

Remarks: Resident of 1st Dist R.I.

* This organization subsequently became Co. L, 11 Reg't U. S. Colored Heavy Artillery.

Book mark:

---

(356) A. B. S. E. Edwards

Copyist.

G | 11 H. Art'y. | U.S.C.T.

Thomas E Gardner

Pvt, Co. L, 14 Reg't R. I. Col'd H. Art'y.*

Appears on

Company Muster Roll

for Jan & Feb, 1864.

Present or absent Present

Stoppage, $ 100 for

Due Gov't, $ 100 for

Valuation of horse, $ 100

Valuation of horse equipments, $ 100

Remarks:

* This organization subsequently became Co. L, 11 Reg't U. S. Colored Heavy Artillery.

Book mark:

(358)

C. B. E. Edwards
Copyist.

G. | 11 H. Art'y. | U.S.C.T.

Thomas, E, Gardner

Pvt, Co. L, 14 Reg't R. I. Col'd H. Art'y.*

Appears on

Company Muster Roll

for Mar, & Apr., 186 4.

Present or absent Present

Stoppage, $ 100 for

Due Gov't, $ 20/100 for Ordnance

Valuation of horse, $ 100

Valuation of horse equipments, $ 100

Remarks:

* This organization subsequently became Co. L, 11 Reg't U. S. Colored Heavy Artillery.

Book mark :

Mauky

(358) *Copyist.*

G. | 11 H. Art'y. | U.S.C.T.

Thomas E. Gardiner

Jr't, Co. L, 8 Reg't U. S. Col'd H. Art'y.*

Appears on

Company Muster Roll

for May & June, 1864.

Present or absent Present

Stoppage, $ 100 for

Due Gov't, $ 100 for

Valuation of horse, $ 100

Valuation of horse equipments, $ 100

Remarks:

† This organization subsequently became Co. C, 11 Reg't U. S. Colored Heavy Artillery.

Book mark:

R. F. Edwards

Copyist.

G | 11 H. Art'y. | U.S.C.T.

Thomas E. Gardner

Pvt., Co. L, 11 Reg't U. S. Col'd H. Art'y.

Appears on

Company Muster Roll

for July & Aug, 186 4.

Present or absent Present

Stoppage, $ 100 for

Due Gov't, $ 100 for

Valuation of horse, $ 100

Valuation of horse equipments, $ 100

Remarks: Sick mo, back pay due from enlistment to Apr. 30/64 Free on Apr 19/'61

Book mark:

(358) Mauley Copyist.

L. | 11 H. Art'y. | U.S.C.T.

Thomas E. Gardiner.

Pvt., Co. L, 11 Reg't U. S. Col'd H. Art'y.

Appears on

Company Muster Roll

for Sept & Oct, 1864.

Present or absent present.

Stoppage, $ 100 for

Due Gov't, $ 100 for

Valuation of horse, $ 100

Valuation of horse equipments, $ 100

Remarks: $16.00 per month back pay due from enlistment to April 30/64.
Free on April 19/61.

Book mark:

Baker,
Copyist.

L. | 11 H. Art'y. | U.S.C.T.

Thomas E. Gardiner.

Pvt., Co. L, 11 Reg't U. S. Col'd H. Art'y.

Appears on

Company Muster Roll

for Nov. & Dec., 1864

Present or absent Present.

Stoppage, $ 100 for

Due Gov't, $ 100 for

Valuation of horse, $ 100

Valuation of horse equipments, $ 100

Remarks:

Book mark:

(358) Baker, *Copyist.*

E. | 11 H. Art'y. | U.S.C.T.

Thomas E. Gardiner.

Pvt., Co. L, 11 Reg't U. S. Col'd H. Art'y.

Appears on

Company Muster Roll

for Jan & Feb., 1865.

Present or absent present.

Stoppage, $ 100 for

Due Gov't, $ 100 for

Valuation of horse, $ 100

Valuation of horse equipments, $ 100

Remarks:

Book mark:

Baker,
Copyist.

(358)

L. | 11 H. Art'y. | U.S.C.T.

Thomas E. Gardiner.

Pvt., Co. L, 11 Reg't U. S. Col'd H. Art'y.

Appears on

Company Muster Roll

for March & April, 1865.

Present or absent present.

Stoppage, $ 100 for

Due Gov't, $ 100 for

Valuation of horse, $ 100

Valuation of horse equipments, $ 100

Remarks:

Book mark:

Baker,
Copyist.

(358)

L | 11 H. Art'y. | U.S.C.T.

Thomas E. Gardner

Pvt, Co. L, 11 Reg't U. S. Col'd H. Art'y.

Appears on

Company Muster Roll

for May & June, 1865.

Present or absent Present

Stoppage, $ 100 for

Due Gov't, $ 100 for

Valuation of horse, $ 100

Valuation of horse equipments, $ 100

Remarks:

Book mark:

Murphy

(358) *Copyist.*

G | 11 H. Art'y. | U.S.C.T.

Thomas E Gardner

Pvt, Co. L, 11 Reg't U. S. Col'd H. Art'y.

Appears on

Company Muster Roll

for July + Aug, 1865.

Present or absent Present

Stoppage, $ 100 for

Due Gov't, $ 100 for

Valuation of horse, $ 100

Valuation of horse equipments, $ 100

Remarks:

Book mark:

(358) Murphy **Copyist.**

G | 11 H. Art'y. | U.S.C.T.

Thomas E Gardner

Pvt, Co. L, 11 Reg't U. S. Col'd H. Art'y.

Appears on Co. Muster-out Roll, dated New Orleans La Oct 2, 1865.

Muster-out to date Oct 2, 1865.

Last paid to Feb 28, 1865.

Clothing account:

Last settled ....., 186 ; drawn since $ 100

Due soldier $ .....100; due U. S. $ 2 37/100

Am't for cloth'g in kind or money adv'd $ 100

Due U. S. for arms, equipments, &c., $ 23/100

Bounty paid $ .....100; due $ 100 100

Remarks: Joined at Regl Organ
Stoppage for (1) Musket
& accts retained (1) screw
driver (lost) $6.00

Book mark : .....

J Murphy

(361) Copyist.

Gardner Thomas E.

P, Co. , 11 Reg't Mass Inf.

1 **Enclosures.**

Bed Cards	Final Statements
Burial Records	Furloughs or L. of A.
Certs. of Dis. for Discharge	Med. Certificates
C. M. Charges	Med. Des. Lists
Descriptive Lists	Orders
Discharge Certificates	Pris. of War Record
Enlistment Papers 1	Resignations

Other papers relating to—

Admission to Hosp'l	Furlough or L. of A.
Casualty Sheet	Med. Examination
Confinement	Misc. Information
Contracts	Pay or Clothing
Death or Effects	Personal Reports
Desertion	Rank
Discharge from Hosp'l	Transfer to Hosp'l
Discharge from Service	Transfer to V. R. C.
Duty	Transportation

MICROFILM PUBLICATION M 1832

COMPILED MILITARY SERVICE RECORDS
OF VOLUNTEER UNION SOLDIERS WHO SERVED WITH
THE UNITED STATES COLORED TROOPS (USCT)
11TH REGIMENT OF HEAVY ARTILLERY

PERSONAL PAPERS' TARGET SHEET

PLEASE NOTE THE CHECKED INFORMATION ABOUT THE PERSONAL PAPERS IN THIS FILE:

☐ NO PERSONAL PAPERS WERE FOUND IN THIS FILE WHEN THE RECORDS WERE ARRANGED FOR MICROFILMING.

☑ 3 PERSONAL PAPER(S) FOUND IN THIS FILE WHEN THE RECORDS WERE ARRANGED FOR MICROFILMING.

DECLARATION OF RECRUIT.

I, Thomas C Gardiner desiring to VOLUNTEER as a Soldier in the *ARMY OF THE UNITED STATES*, for the term of 3 Years do declare that I am 18 years and 3 Years months of age; that I have never been discharged from the United States service on account of disability or by sentence of a court martial, or by order, before the expiration of a term of enlistment; and I know of no impediment to my serving honestly and faithfully as a soldier for 3 Years

Given at Providence

The day of Dec 1863

Witness: L S Mann

Thomas C Gardiner

No. 1

Thomas C Gardiner

Volunteered at Prov. R.I. *Dec 15*

By Lt Crosby

Mg 14 Regiment of Engrs

enlistment; last served in Company ( )

Rej't of

Discharged 18

JUL 11 1871 ADJUTANT GEN'L

CONSENT IN CASE OF MINOR.

I, Do Certify that I am the

of ; that the said

is years of age; and I do hereby freely give

my CONSENT to his volunteering as a SOLDIER in the ARMY OF THE UNITED STATES for the period of

Given at

The day of

Witness

VOLUNTEER ENLISTMENT.

State of Rhode Island Town of Providence

I, Thomas E Gardner born in ——

in the State of Pennsylvania aged 18 years, and by occupation a Farmer

DO HEREBY ACKNOWLEDGE to have volunteered this 14 day of Dec 1863 to serve as a SOLDIER in the ARMY OF THE UNITED STATES OF AMERICA, for the period of three Years, unless sooner discharged by proper authority: Do also agree to accept such bounty, pay, rations and clothing, as are, or may be, established, by law for volunteers. And I, Thomas E Gardner do solemnly swear, that I will bear true faith and allegiance to the *United States of America*, and that I will serve them honestly and faithfully against all their enemies or opposers whomsoever; and that I will observe and obey the orders of the President of the United States, and the orders of the officers appointed over me, according to the Rules and Articles of War.

Thomas E Gardiner

Sworn and Subscribed to, at Providence this —— day of Dec 1863. BEFORE me John L Knopp Public Notary

I CERTIFY, ON HONOR, That I have carefully examined the above-named Volunteer, agreeable to the General Regulations of the Army, and that, in my opinion, he is free from all bodily defects and mental infirmity, which would, in any way, disqualify him from performing the duties of a soldier.

Johnson Gardner M D

EXAMINING SURGEON.

I CERTIFY, ON HONOR, That I have minutely inspected the Volunteer, Thomas E Gardner previously to his enlistment, and that he was entirely sober when enlisted; that to the best of my judgment and belief, he is of lawful age; and that, in accepting him as duly qualified to perform the duties of an able-bodied soldier, I have strictly observed the Regulations which govern the recruiting service. This soldier has dark *eyes* black *hair*, fair *complexion*, is five *feet*, 13/4 *inches high*.

Mayor 14 *Regiment of* 4th Cavalry *Volunteers*.

RECRUITING OFFICER.

(Write nothing in this space.)

(Attach this end.)

1st Ind

War Department, A. G. O., July 18, 1916--To the Governor, National Soldiers' Home, Elizabeth City County, Virginia.

The records of this office show that Thomas E. Gardner, Company L, 11th United States Colored Heavy Artillery (not found as Infantry) was mustered into service December 31, 1863, and was honorably discharged the service October 2, 1865, as a private.

H. P. McCain

The Adjutant General.

Statement of Service Reference Slip.

Gardner Thomas E.
(Name.)

Co. L. 11 U.S.C. Inf.
(Rank and organization.)

Request for military record of the above-named by applicant whose name and address are shown by attached carbon copy of answer.

C. T.E. Div.
Not found on 11 U.S.C.!
Thomas E. Gardner,
Co. L. 11 U.S.C. Hatty.
Enl. Dec 14, 63 at
Providence, R.I.
Mpi Dec. 31, 63 for 3 yrs
at Providence, R.I.
private
M.O. Oct. 2, 65 with Co.
at pt. at New Orleans, La.

7-17-16
3.26'

J Johnson
E.D.

Form No. 447-2—A. G. O.
Ed. July 16-15—10,000.

1215

Co. K, 11 U.S.Col'd H. Art.

Points | Points

CARD NUMBERS.

1 6182201	26
2 6182347	27
3 6182499	28
4 6182640	29
5 6182777	30
6 6182908	31
7 6183112	32
8 6183796	33
9 9123967	34
10 9123815	35
11	36
12	37
13	38
14	39
15	40
16	41
17	42
18	43
19	44
20	45
21	46
22	47
23	48
24	49
25	50

Book Mark:

See also

G | 11 H. Art'y. | U.S.C.T.

Willard P. Gardner

....., Co. A, 11 Reg't U. S. Col'd H. Art'y.

Appears on

Company Descriptive Book

of the organization named above.

DESCRIPTION.

Age 25 years; height 5 feet 9 3/4 inches.

Complexion African

Eyes Blk; hair Blk

Where born Providence R. I.

Occupation Painter

ENLISTMENT.

When July 8, 1863.

Where Point R. I.

By whom Capt'd; term 3 y'rs.

Remarks: Died at Fort Jackson La Sept 12/64 Inventory & Final Statements Rec'd Sept 13. 64

(3830) *Coppist.*

G | 11 H. Art'y. | U.S.C.T.

Willard O. Gardner

....., Co. A, 11 Reg't U. S. Col'd H. Art'y.

Appears on

Company Descriptive Book

of the organization named above.

DESCRIPTION.

Age 25 years; height 5 feet 9 3/4 inches.

Complexion African

Eyes Blk; hair Blk

Where born Providence R I

Occupation Sailor

ENLISTMENT.

When Drafted July 8, 1863.

Where Prov. R. I.

By whom Lieut R. I.; term 3 y'rs.

Remarks: Died at Fort Jackson La Sept 12. 64. Inventory & final statements rec'd Sept 12. 64.

Davis

(3554) Copyist.

G | 11 H. Art'y. | U.S.C.T.

Willard L. Gardner

Pvt., Co. A, 14 Reg't R. I. Col'd H. Art'y.*

Age 25 years.

Appears on

Company Muster-in Roll

of the organization named above. Roll dated Camp Smith near Providence R.I., Aug 28, 1863.

Muster-in to date Aug 28, 1863.

Joined for duty and enrolled:

When July 6, 1863.

Where Providence

Period 3 years.

Valuation of horse, $ 100

Valuation of horse equipments, $ 100

Remarks: 1st District

* This organization subsequently became Co. A, 11 Reg't U. S. Colored Heavy Artillery.

Book mark:

Prewitt

(356) Copyist.

G | 11 H. Art'y. | U.S.C.T.

Willard C. Gardner

Pvt., Co. A, 14 Reg't R. I. Col'd H. Art'y.*

Appears on

Company Muster Roll

for Aug 28 to Dec 31, 1863.

Present or absent Present

Stoppage, $ ---- 100 for ----

Due Gov't, $ ---- 100 for ----

Valuation of horse, $ ---- 100

Valuation of horse equipments, $ ---- 100

Remarks: ----

*This organization subsequently became Co. A, 11 Reg't U. S. Colored Heavy Artillery.

Book mark: ----

Prewitt

Copyist.

G | 11 H. Art'y. | U.S.C.T.

Williard C. Gardner

Pvt., Co. A, 14 Reg't R. I. Col'd H. Art'y.*

Appears on

Company Muster Roll

for Jan & Feb, 1864.

Present or absent Present

Stoppage, $ 100 for

Due Gov't, $ 100 for

Valuation of horse, $ 100

Valuation of horse equipments, $ 100

Remarks:

*This organization subsequently became Co. A, 11 Reg't U. S. Colored Heavy Artillery.

Book mark:

Prevatt

(358) Copyist.

G | 11 H. Art'y. | U.S.C.T.

William L. Gardner

Pvt., Co. A, 14 Reg't R. I. Col'd H. Art'y.*

Appears on

Company Muster Roll

for Mch & Apl, 1864.

Present or absent Present

Stoppage, $ 100 for

Due Gov't, $ 100 for

Valuation of horse, $ 100

Valuation of horse equipments, $ 100

Remarks:

*This organization subsequently became Co. A, 11 Reg't U. S. Colored Heavy Artillery.

Book mark:

Prewitt

(358) Copyist.

G | 11 H. Art'y. | U.S.C.T.

William A. Saulsen

Pvt., Co. A, 8 Reg't U. S. Col'd H. Art'y.*

Appears on

Company Muster Roll

for May & June, 1864.

Present or absent Present

Stoppage, $ ... 100 for .....

Due Gov't, $ ..... 100 for .....

Valuation of horse, $ 100

Valuation of horse equipments, $ 100

Remarks: .....

* This organization subsequently became Co. C, 11 Reg't U. S. Colored Heavy Artillery.

Book mark: .....

Present

(358) Copyist.

G | 11 H. Art'y. | U.S.C.T.

Willard C. Gardner

R'k, Co. A, 11 Reg't U. S. Col'd H. Art'y.

Appears on

Company Muster Roll

for July & Aug., 1864.

Present or absent Present

Stoppage, $ 100 for

Due Gov't, $ 100 for

Valuation of horse, $ 100

Valuation of horse equipments, $ 100

Remarks: Died April 19, 1861

Book mark:

Bridgeford

(358) Copyist.

C | 11 H. Art'y. | U.S.C.T.

William L. Gardner

Pvt, Co. A, 11 Reg't U. S. Col'd H. Art'y.

Appears on

Company Muster Roll

for Sept. & Oct., 1864.

Present or absent.....

Stoppage, $.....$\frac{82}{100}$ for Ordnance

.....

Due Gov't, $.....$\frac{}{100}$ for .....

.....

Valuation of horse, $.....$\frac{}{100}$

Valuation of horse equipments, $.....$\frac{}{100}$

Remarks: Deceased

Died in Batt. Hospital

Fort Jackson La. Sept. 12th 1864

Burying & Final Statements

rendered.

.....

.....

.....

Book mark: .....

.....

(358) Copyist.

G. | 11 H. Art'y. | U.S.C.T.

Willard C. Gardner,

Priv., Co. K, 11 Reg't U. S. Col'd H. Art'y.

Appears on **Co. Muster-out Roll,** dated

New Orleans, La., Oct. 2, 186 5.

Muster-out to date ....., 186 .

Last paid to ....., 186 .

Clothing account:

Last settled....., 186 ; drawn since $.....100

Due soldier $.....100; due U. S. $.....100

Am't for cloth'g in kind or money adv'd $.....100

Due U. S. for arms, equipments, &c., $.....100

Bounty paid $.....100; due $.....100

Remarks: Joined Regt. Oct. 2

Died Ft. Jackson, La. Sept. 12/64 Order and Final Stat's rec'd Sept. 12/64

Book mark: 74.9230.I.B.U.

R. Drummer

(861) Copyist.

Gardner Holland C

8, Co. a, 11 Reg't Massachusetts

4 Enclosures.

Bed Cards	Final Statements 2
Burial Records	Furloughs or L. of A.
Certs. of Dis. for Discharge	Med. Certificates
C. M. Charges	Med. Des. Lists
Descriptive Lists	Orders
Discharge Certificates	Pris. of War Record
Enlistment Papers 1	Resignations

Other papers relating to—

Admission to Hosp'l	Furlough or L. of A.
Casualty Sheet	Med. Examination
Confinement	Misc. Information
Contracts	Pay or Clothing
Death or Effects 1	Personal Reports
Desertion	Rank
Discharge from Hosp'l	Transfer to Hosp'l
Discharge from Service	Transfer to V. R. C.
Duty	Transportation

DECLARATION OF RECRUIT.

I, Willard C. Gardner desiring to VOLUNTEER as a Soldier in the *ARMY OF THE UNITED STATES*, for the term of three years, do declare that I am 21 years and 8 months of age; that I have never been discharged from the United States service on account of disability or by sentence of a court martial, or by order, before the expiration of a term of enlistment; and I know of no impediment to my serving honestly and faithfully as a soldier for the First Col. Cav. Heavy Artillery.

Given at Providence

The 19th day of August 18 63.

Witness: Fred B. Waugh

Willard C. Gardner.

No. 1

Willard C. Gardner

Volunteered at

By

11 Regiment of

enlistment; last served in Company ( )

Reg't of

Discharged 18

RECEIVED-ADJ-GEN'S OFFICE JUL 11 1871

CONSENT IN CASE OF MINOR.

I, Do Certify that I am the of ; that the said is years of age; and I do hereby freely give my CONSENT to his volunteering as a SOLDIER in the ARMY OF THE UNITED STATES for the period of

Given at

The day of

Witness:

VOLUNTEER ENLISTMENT.

State of Rhode Island Town of Providence

I, Willard C. Gardner born in Providence in the State of Rhode Island aged 25 years, and by occupation a waiter DO HEREBY ACKNOWLEDGE to have volunteered this 6th day of August 1863, to serve as a SOLDIER in the ARMY OF THE UNITED STATES of AMERICA, for the period of three years, unless sooner discharged by proper authority: Do also agree to accept such bounty, pay, rations and clothing, as are, or may be, established by law for volunteers. And I, Willard C. Gardner do solemnly swear, that I will bear true faith and allegiance to the *United States of America*, and that I will serve them honestly and faithfully against all their enemies or opposers whomsoever; and that I will observe and obey the orders of the President of the United States, and the orders of the officers appointed over me, according to the Rules and Articles of War.

Sworn and subscribed to, at Providence this 6th day of August 1863. BEFORE me Wm Sanford Mayor & Justice of the Peace

Willard C Gardner.

I CERTIFY, ON HONOR, That I have carefully examined the above-named Volunteer, agreeably to the General Regulations of the Army, and that, in my opinion, he is free from all bodily defects and mental infirmity, which would, in any way, disqualify him from performing the duties of a soldier.

Johnson Gardner M.D.

EXAMINING SURGEON.

I CERTIFY, ON HONOR, That I have minutely inspected the Volunteer, Willard C. Gardner previously to his enlistment, and that he was entirely sober when enlisted; that, to the best of my judgment and belief, he is of lawful age; and that, in accepting him as duly qualified to perform the duties of an able-bodied soldier, I have strictly observed the Regulations which govern the recruiting service. This soldier has black *eyes*, black *hair*, African *complexion*, is 5' *feet*, 7 3/4 *inches high*.

First-colored company Heavy Artillery

~~Regiment of~~ Rhode Island *Volunteers*,

Wm H Hebard

RECRUITING OFFICER.

2s
3c 2c —1864—

FINAL STATEMENT

OF

Willard C. Gardner

11th Reg't of U. S. C. A. Heavy

VOLUNTEERS.

NOTE 1.—*Two* of these certificates (or duplicates) are to be given to each Volunteer Soldier or drafted man who may be discharged previously to the discharge of his company, that he may at once receive from the Paymaster the pay, &c., due him, and the captain or other COMMISSIONED officer commanding the company will certify to the act of the delivery of the duplicate certificates; on these certificates the Soldier is "entitled to" his *discharge*, and should also present his discharge to the Paymaster to have the payment endorsed on it. The discharge is to be given back to the Soldier by the Paymaster; the latter only retaining as his voucher the duplicate certificates.

NOTE 2.—If the Soldier is entitled to pay for the use of his horse, the Company Commander will certify to that fact on the back of both these final statements, and also to the time he has pay due for having been so mounted on his own horse.

NOTE 3.—When a Soldier is furnished with final statements, his descriptive list, if he has one, should be taken up by the officer who gives the Soldier these statements, and endorsed with a statement to this effect by the officer. This endorsement should exhibit a full statement of the time for which the Soldier was allowed pay on his final statements, the clothing account, and all other charges against him or in his favor, so as to comprise a complete exhibit of his account. It will then be transmitted to the company commander of the Soldier, who will enter all the data necessary to a full understanding of the Soldier's account on the muster roll upon which the Soldier's discharge is reported. The descriptive list will then be destroyed. The object of this is, that the remaining portion of the Soldier's account may be settled upon the receipt of these muster rolls, and the Soldier receive any pay or allowances that may be due him at the time of his discharge, and which may not appear on his final statements from the fact that his descriptive list is incomplete. These accounts for back pay, &c., are settled by the 2d Auditor of the Treasury Department.

NOTE 4.—Charges for loss or injury to ordnance, horse equipments, and other miscellaneous charges, should appear under the heading of "Other Stoppages."

NOTE 5.—Bounty paid by State authorities, and not by the United States, will not be entered on this statement.

NOTE 6.—Amounts due the Sutler and Laundress must be entered on the muster roll on which the discharge, death, desertion, &c., is reported, as well as on the final statement, otherwise the amount cannot be collected from the United States.

NOTE 7.—This blank will be used for deceased volunteers and drafted men, as well as for others.

NOTE 8.—Where a Soldier dies in Hospital or on detached service, his descriptive list, if he has one, should be sent with his final statements, in duplicate, to the Second Auditor, Washington, D. C.

1864

RECEIVED
JUL 6 1871
ADJUTANT GEN'LS

I certify, on honor, that Willard C. Gardner a Private of Captain Thomas W. Pitts Company (A) of the 11th Regiment of U.S.C.A. Heavy VOLUNTEERS, of the State of Rhode Island, born in Providence, State of Rhode Island, aged 25 years; 5 feet 9¾ inches high; Black complexion, Black eyes, Black hair, and by occupation a Waiter, having joined the company on its original organization at Providence R.I., and enrolled in it at the muster into the service of the United States at X, on the X day of X, 186 , (or was mustered in service as a recruit, by X, at X, on the X day of X, ~~186~~ , or was drafted and mustered into the service of the United States from the First Enrollment District of the State of Rhode Island, at Providence R.I., on the Eighth day of July, 1863,) to serve in the Regiment, for the term of Three Years: and having served HONESTLY and FAITHFULLY with his Company in 11th U.S.C.A. Heavy to the present date, is now entitled to a DISCHARGE by reason of Death in consequence of Acute Diarrhoea

The said Willard C. Gardner was ~~last~~ never paid by Paymaster to include the day of , 186 , and has pay due him from that time to the present date; he is entitled to pay and subsistence for TRAVELING to place of enrollment, and whatever other allowances are authorized to volunteer soldiers, drafted men, or militia, so discharged. He has received from the United States CLOTHING amounting to Sixty Eight $^{00}/_{100}$ dollars, since the 8th day of July, 1863, when his clothing account was last settled. He has received from the United States $^{00}/_{100}$ dollars advanced BOUNTY.

There is to be stopped from him, on account of the State of , or other authorities, for CLOTHING, &c., received on entering service, $^{00}/_{100}$ dollars; and for other stoppages, viz:

$^{00}/_{100}$ dollars.

He has been furnished with TRANSPORTATION in kind from the place of his discharge to ; and he has been SUBSISTED for TRAVELING to his place of enrollment, up to the , 186 .

He is indebted to , SUTLER, $^{00}/_{100}$ dollars.

He is indebted to , LAUNDRESS, $^{00}/_{100}$ dollars.

Given in Duplicate, at Fort Jackson Sea., this 12th day of September, 1864.

Thos W Pitts
Capt 11th U.S.C.A. Hy
Commanding Company.

A. G. O., No. 95—First.

V

FINAL STATEMENT

OF

Willard C. Gardner

11th Reg't of U. S. C. A. Heavy

11

VOLUNTEERS.

Nov Dept 12" 1864

NOTE 1.—*Two* of these certificates (or duplicates) are to be given to each Volunteer Soldier or drafted man who may be discharged previously to the discharge of his company, that he may at once receive from the Paymaster the pay, &c., due him, and the captain or other COMMISSIONED officer commanding the company will certify to the act of the delivery of the duplicate certificates; on these certificates the Soldier is "entitled to" his *discharge*, and should also present his discharge to the Paymaster to have the payment endorsed on it. The discharge is to be given back to the Soldier by the Paymaster; the latter only retaining as his voucher the duplicate certificates.

NOTE 2.—If the Soldier is entitled to pay for the use of his horse, the Company Commander will certify to that fact on the back of both these final statements, and also to the time he has pay due for having been so mounted on his own horse.

NOTE 3.—When a Soldier is furnished with final statements, his descriptive list, if he has one, should be taken up by the officer who gives the Soldier these statements, and endorsed with a statement to this effect by the officer. This endorsement should exhibit a full statement of the time for which the Soldier was allowed pay on his final statements, the clothing account, and all other charges against him or in his favor, so as to comprise a complete exhibit of his account. It will then be transmitted to the company commander of the Soldier, who will enter all the data necessary to a full understanding of the Soldier's account on the muster roll upon which the Soldier's discharge is reported. The descriptive list will then be destroyed. The object of this is, that the remaining portion of the Soldier's account may be settled upon the receipt of these muster rolls, and the Soldier receive any pay or allowances that may be due him at the time of his discharge, and which may not appear on his final statements from the fact that his descriptive list is incomplete. These accounts for back pay, &c., are settled by the 2d Auditor of the Treasury Department.

NOTE 4.—Charges for loss or injury to ordnance, horse equipments, and other miscellaneous charges, should appear under the heading of "Other Stoppages."

NOTE 5.—Bounty paid by State authorities, and not by the United States, will not be entered on this statement.

NOTE 6.—Amounts due the Sutler and Laundress must be entered on the muster roll on which the discharge, death, desertion, &c., is reported, as well as on the final statement, otherwise the amount cannot be collected from the United States.

NOTE 7.—This blank will be used for deceased volunteers and drafted men, as well as for others.

NOTE 8.—Where a Soldier dies in Hospital or on detached service, his descriptive list, if he has one, should be sent with his final statements, in duplicate, to the Second Auditor, Washington, D. C.

RECEIVED
OCT
10
1864
ADJUTANT GEN'LS OFFICE

ADJUTANT GENERAL'S OFFICE
Oct 11" 1864
Duplicate with Inventory sent 2d Auditor.

I certify, on honor, that Willard C. Gardner a Private of Captain Thomas W. Frey's Company (A) of the 11th Regiment of U. S. C. H. Heavy VOLUNTEERS, of the State of Rhode Island, born in Providence, State of Rhode Island, aged 25 years; 5 feet 9½ inches high; Black complexion, Black eyes, Black hair, and by occupation a Waiter, having joined the company on its original organization at Pawtuxet R I, and enrolled in it at the muster into the service of the United States at +, on the + day of +, 186 , (or was mustered in service as a recruit, by + , at +, on the + day of +, 186 , or was drafted and mustered into the service of the United States from the First Enrollment District of the State of Rhode Island, at Providence R. I., on the Eighth day of July, 1863,) to serve in the Regiment, for the term of Three Years: and having served HONESTLY and FAITHFULLY with his Company in 11th U. S. C. H. Heavy to the present date, is now entitled to a DISCHARGE by reason of Death in consequence of Acute Diarrhoea (and Sept. 12th 1864 Secd Inventory)

The said Willard C. Gardner was ~~last~~ never paid by Paymaster to include the day of , 186 , and has pay due him from that time to the present date; he is entitled to pay and subsistence for TRAVELING to place of enrollment, and whatever other allowances are authorized to volunteer soldiers, drafted men, or militia, so discharged. He has received from the United States CLOTHING amounting to Sixty Eight 12/100 dollars, since the 8th day of July, 1863, when his clothing account was last settled. He has received from the United States 00/100 dollars advanced BOUNTY.

There is to be stopped from him, on account of the State of , or other authorities, for CLOTHING, &c., received on entering service, 00/100 dollars; and for other stoppages, viz:

00/100 dollars.

He has been furnished with TRANSPORTATION in kind from the place of his discharge to ; and he has been SUBSISTED for TRAVELING to his place of enrollment, up to the , 186 .

He is indebted to , SUTLER, 00/100 dollars.

He is indebted to , LAUNDRESS, 00/100 dollars.

Given in Duplicate, at Fort Jackson La., this 12th day of September, 1864.

Thos W Frey
Capt 11th R. I. H. A. C.
Commanding Company.

A. G. O. No. 95—First.)

ARTICLES OF WAR.

ART. 95. When any non-commissioned officer or soldier shall die, or be killed in the service of the United States, the then commanding officer of the troop or company shall, in the presence of two other commissioned officers, take an account of what effects he died possessed of, above his arms and accoutrements, and transmit the same to the office of the Department of War, which said effects are to be accounted for, and paid to the representatives of such deceased non-commissioned officer or soldier. And in case any of the officers, so authorized to take care of the effects of deceased officers and soldiers, should, before they have accounted to their representatives for the same, have occasion to leave the regiment or post, by preferment or otherwise, they shall, before they be permitted to quit the same, deposit in the hands of the commanding officer, or of the assistant military agent, all the effects of such deceased non-commissioned officers and soldiers, in order that the same may be secured for, and paid to, their respective representatives.

ARMY REGULATIONS—EDITION OF 1861.

DECEASED SOLDIERS.

Par. 152. Inventories of the effects of deceased non-commissioned officers and soldiers, required by the 95th Article of War, will be forwarded to the Adjutant General, by the commander of the company to which the deceased belonged, and a duplicate of the same to the colonel of the regiment. Final statements of pay, clothing, &c., will be sent with the inventories. When a soldier dies at a post or station absent from his company, it will be the duty of his immediate commander to furnish the required inventory, and, at the same time, to forward to the commanding officer of the company to which the soldier belonged, a report of his death, specifying the date, place, and cause; to what time he was last paid, and the money or other effects in his possession at the time of his decease; which report will be noted on the next muster roll of the company to which the man belonged. Each inventory will be endorsed, "Inventory of the effects of ——— ———, late of company (—) ——— regiment of ———, who died at ———, the——— day, of ———, 186–." If a legal representative receive the effects, it will be stated in the report. If the soldier leave no effects, the fact will be reported.

Par. 153. Should the effects of a deceased non-commissioned officer or soldier not be administered upon within a short period after his decease, they shall be disposed of by a Council of Administration, under the authority of the commanding officer of the post, and the proceeds deposited with the Paymaster, to the credit of the United States, until they shall be claimed by the legal representatives of the deceased.

Par. 154. In all such cases of sales by the Council of Administration, a statement in detail, or account of the proceeds, duly certified by the Council and commanding officer, accompanied by the Paymaster's receipt for the proceeds, will be forwarded by the commanding officer to the Adjutant General. The statement will be endorsed, "Report of the proceeds of the effects of ——— ———, late of company (—) ——— regiment of ———, who died at ———, the —— day of ———, 186–."

NOTE 1.—The effects in all cases, when called for, should be turned over to the legal representative, without further authority from the Adjutant General. When the effects are turned over to the relatives of the deceased before these inventories are sent to the Adjutant General, their receipts therefor should be attached to the inventories. In all other cases, one copy will be sent with a letter of transmittal direct to the Adjutant General, and a duplicate retained by the officer.

NOTE 2.—Particular care should be taken to take receipts in duplicate from the Paymaster for any funds turned over to him; one copy should be sent direct to the Adjutant General and one retained by the officer.

INVENTORY OF THE EFFECTS

OF

Willard C. Gardner

Late of Company A.

11th *Reg't of* U. S. C. Heavy

Volunteers, who died at Fort Jackson La.

on the 12th *day of* September 1864.

JUL 6 1871

Inventory of the effects of Willard C. Gardner late a Private of Captain Thomas W. Fry's Company A of the 11th Regiment of U. S. C. H. Heavy Volunteers, who was ~~enrolled~~ Died as a Private at Providence in the State of Rhode Island on the 8th day of July 1863, and mustered into the service of the United States as a Private on the 28th day of August 1863, at Providence R. I. in Company A, 14th Regiment of Rhode Island H.A. Volunteers, to serve Three years or during the war; he was born in Providence in the State of Rhode Island; he was 25 years of age, 5 feet 9 3/4 inches high, Black complexion, Black eyes, Black hair, and by occupation, when enrolled, a Waiter; he died in Batt Hospital, at Fort Jackson La. on the 12th day of September 1864, by reason of Acute Diarrhoea

INVENTORY.

Articles.	No.	Articles.	No.	Articles.	No.
Hats		Pairs trowsers		Knapsacks	
Caps		Pairs flannel drawers			
Forage caps		Pairs cotton drawers			
Great coats		Flannel shirts			
Uniform coats		Cotton shirts			
Uniform jackets		Pairs boots			
Flannel sack coats		Pairs shoes			
Blouses		Pairs socks			
Stable frocks		Blankets			
Fatigue overalls		Haversacks			

Money.		
	Specie	$
	Notes	$

I certify, on honor, that the above inventory comprises all the effects of Willard C. Gardner, deceased, and that the effects are in the hands of _____ at _____ to be disposed of by a Council of Administration.

(DUPLICATES.)

Thos W Fry
Capt 11th U.S.C.H.A.

Commanding the Company.

Station: Fort Jackson La.

Date: September 12th 1864

[A. G. O. No. 104.]

[illegible]	[illegible]

CARD NUMBERS.

1 1619 [illegible]79	26
2 1619 [illegible]035	27
3 1619 [illegible]182	28
4 1619 [illegible]341	29
5 1619 [illegible]499	30
6 1619 [illegible]555	31
7 1619 [illegible]900	32
8 1619 [illegible]943	33
9 1619 [illegible]083	34
10 1619 [illegible]218	35
11 1619 [illegible]343	36
12 1619 [illegible]471	37
13 1619 [illegible]590	38
14 1619 [illegible]658	39
15 1612 [illegible]632	40
16 [illegible]708,693	41
17	42
18	43
19	44
20	45
21	46
22	47
23	48
24	49
25	50

Book Mark: [illegible]

See also

J. B. Druck
Ex

J. 736493 P.O. Mt on.
878725-P.O. portat.
R.P. 708693
D. 2461432 and W.D.
D. 2464820 and N.Z. (Cls)

G | 11 H. Art'y. | U.S.C.T.

George Garner

, Co. K, 11 Reg't U. S. Col'd H. Art'y.

Appears on

Company Descriptive Book

of the organization named above.

DESCRIPTION.

Age 21 years; height 5 feet 9½ inches.

Complexion African

Eyes Blk; hair Blk

Where born Winchester Va

Occupation Farmer

ENLISTMENT.

When Dec 4, 186 .

Where Prov R. I.

By whom J C Engly; term 3 y'rs.

Remarks: Mustered out Oct 2/65

Griffith

(3836) Copyist.

G | 11 H. Art'y. | U.S.C.T.

George Garner

Pt, Co. K, 14 Reg't R. I. Col'd H. Art'y.*

Age 21 years.

Appears on

Company Muster-in Roll

of the organization named above. Roll dated Cp. nr. Providence R.I. Dec 17, 1863.

Muster-in to date Dec 17, 1863.

Joined for duty and enrolled:

When Dec 4, 1863

Where Providence R.I.

Period 3 years.

Valuation of horse, $ 100

Valuation of horse equipments, $ 100

Remarks:

* This organization subsequently became Co. K, 11 Reg't U. S. Colored Heavy Artillery.

Book mark: R.I. 708693.

J. H. Stewart

(356) Copyist.

G | 11 H. Art'y. | U.S.C.T.

George Garner

Pt, Co. K, 14 Reg't R. I. Col'd H. Art'y.*

Appears on

Company Muster Roll

for Dec 17th Dec 31, 186 3

Present or absent Present

Stoppage, $ 100 for

Due Gov't, $ 100 for

Valuation of horse, $ 100

Valuation of horse equipments, $ 100

Remarks:

*This organization subsequently became Co. K, 11 Reg't U. S. Colored Heavy Artillery.

Book mark:

J H Stewart

(358) *Copyist.*

G | 11 H. Art'y. | U.S.C.T.

George Garner

Pt, Co. K, 14 Reg't R. I. Col'd H. Art'y.*

Appears on

Company Muster Roll

for Jan & Feb, 1864.

Present or absent Present

Stoppage, $ 100 for

Due Gov't, $ 100 for

Valuation of horse, $ 100

Valuation of horse equipments, $ 100

Remarks:

*This organization subsequently became Co. K, 11 Reg't U. S. Colored Heavy Artillery.

Book mark:

(358) J M Steward

Copyist.

G | 11 H. Art'y. | U.S.C.T.

George Garner

Pt, Co. K, 14 Reg't R. I. Col'd H. Art'y.*

Appears on

Company Muster Roll

for Mch & Apl, 1864

Present or absent Present

Stoppage, $ 100 for

Due Gov't, $ 100 for

Valuation of horse, $ 100

Valuation of horse equipments, $ 100

Remarks: Stop for Bayonet wiper & screw driver $1.73

*This organization subsequently became Co. K, 11 Reg't U. S. Colored Heavy Artillery.

Book mark:

(358) J. W. Stewart

Copyist.

L | 11 H. Art'y. | U.S.C.T.

Sergt. James

Pvt., Co. K, 8 Reg't U. S. Col'd H. Art'y.*

Appears on

Company Muster Roll

for Augt June, 1864

Present or absent Present

Stoppage, $ 100 for

Due Gov't, $ 100 for

Valuation of horse, $ 100

Valuation of horse equipments, $ 100

Remarks:

† This organization subsequently became Co. L, 11 Reg't U. S. Colored Heavy Artillery.

Book mark:

(358) R Turrell

Copyist.

	11 H. Art'y.	U.S.C.T.

George Gaines

Pvt., Co. K, 11 Reg't U. S. Col'd H. Art'y.

Appears on

Company Muster Roll

for July & Aug, 1864.

Present or absent Present

Stoppage, $ 100 for

Due Gov't, $ 22/100 for Cap & Gl lost

or Destroyed

Valuation of horse, $ 100

Valuation of horse equipments, $ 100

Remarks: Recon 19 Apl 64

$16 per month due

from enlistment

to April 30/64.

Book mark:

R Stewart

(358) *Copyist.*

G | 11 H. Art'y. | U.S.C.T.

George Dawes

Pvt., Co. K, 11 Reg't U. S. Col'd H. Art'y.

Appears on

Company Muster Roll

for Sept & Oct, 1864.

Present or absent Present

Stoppage, $ 100 for

Due Gov't, $ 49/100 for Camp & Garrison Equipage

Valuation of horse, $ 100

Valuation of horse equipments, $ 100

Remarks:

Book mark:

(358) Copyist.

11 H. Art'y. | U.S.C.T.

George Farmer

Pvt., Co. K, 11 Reg't U. S. Col'd H. Art'y.

Appears on

Company Muster Roll

for Nov & Dec, 1864.

Present or absent Present

Stoppage, $ 100 for

Due Gov't, $ 21/100 for Clothing

Valuation of horse, $ 100

Valuation of horse equipments, $ 100

Remarks: Drawn Shoes

C. & G. L. 49 cts.

Book mark:

(358) *Copyist.*

G | 11 H. Art'y. | U.S.C.T.

George Garner

Pvt., Co. K, 11 Reg't U. S. Col'd H. Art'y.

Appears on

Company Muster Roll

for Jan'y & Feb., 1865.

Present or absent Present

Stoppage, $ 100 for

Due Gov't, $ 21/100 for Ordnance

Valuation of horse, $ 100

Valuation of horse equipments, $ 100

Remarks: Drafted Sept 5 1864

C. & G. D. 49 Clr

Book mark:

(358) *Copyist.*

C | 11 H. Art'y. | U.S.C.T.

George Garner

Pvt., Co. K, 11 Reg't U. S. Col'd H. Art'y.

Appears on

Company Muster Roll

for March & April, 1865.

Present or absent Present

Stoppage, $ 100 for

Due Gov't, $ 21/100 for Ordnance

Valuation of horse, $ 100

Valuation of horse equipments, $ 100

Remarks: Due U S for
C & G. E. 52 Cts.

Book mark:

(358) *Copyist.*

G | 11 H. Art'y. | U.S.C.T.

George Garner

Pvt, Co. K, 11 Reg't U. S. Col'd H. Art'y.

Appears on

Company Muster Roll

for May & June, 1865.

Present or absent Present

Stoppage, $ 100 for

Due Gov't, $ 97/100 for C & E

Valuation of horse, $ 100

Valuation of horse equipments, $ 100

Remarks:

Book mark:

(358) Copyist.

G | 11 H. Art'y. | U.S.C.T.

George Garner
Pvt, Co. K, 11 Reg't U. S. Col'd H. Art'y.

Appears on

Company Muster Roll

for July & Aug, 1865.

Present or absent Present

Stoppage, $ 100 for

Due Gov't, $ 1 07/100 for C & E lost and destroyed

Valuation of horse, $ 100

Valuation of horse equipments, $ 100

Remarks: Loss of $24 of his pay by sentence of F. O. C June 21" 1865.

Book mark:

(358) Spencer Copyist.

G | 11 H. Art'y. | U.S.C.T.

George Garner

Pvt, Co. K, 11 Reg't U. S. Col'd H. Art'y.

Appears on **Co. Muster-out Roll,** dated New Orleans, La., Oct. 2, 1865.

Muster-out to date ....., 186 .

Last paid to Feb. 28, 1865.

Clothing account:

Last settled....., 186 ; drawn since $.....100

Due soldier $.....100; due U. S. $9.....55/100

Am't for cloth'g in kind or money adv'd $.....100

Due U. S. for arms, equipments, &c., $1.....07/100

Bounty paid $None.....100; due $100.....00/100

Remarks: Joined at Orig. Organ. Stopped 1 Mosquito Bar, 3 Eagle, 1 No. 1 " Cost. $24 stopped by Sm. J. O. C. June 21, '65; 1 Blk. North Rick " No. D.L. furnished.

Book mark: P.M. 780. Jan. 19/66. (over)

(361) Sprecher

Copyist.

JAN.15
6199590
c1891

Book Mark:
A.G.O. Su M.O.R. on file.
No discharge furnished at
Muster Out of Organ.
None will be given.

G | 11 H. Arty. | **U.S.C.T.**

George Gauer

Priv., Co. K, 11 Reg't U. S. Col'd H. Arty

Appears on an

Individual Muster-out Roll

of the organization named above. Roll dated

New York City, Oct. 21, 1865.

Muster-out to date Oct. 21, 1865.

Last paid to Feb. 28, 1865.

Clothing account:

Last settled ....., 186 ; drawn since $ 100

Due soldier $ 100 ; due U. S. $ 100

Am't for cloth'g in kind or money adv'd $ 100

Due U. S. for arms, equipments, &c., $ 100

Bounty paid $ 100 due $ 100

Remarks: Mustered out under Tel. orders from War Dep't, May 4/65, on partial descriptive list from A.G.O. which states due U.S. Ordnance 40¢, C. & G.E., 9¢ Loss of $24.00 of this pay by sentence of G.C.M. June 21 & 23/65. There is no ×cert. filed by S.S. Dead. Exp. (over)

Book mark: P.O. 780 Jan. 19, 1866.

---

(348) J. B. Jones *Copyist.*

JAN. 14 ~~6181647~~ ☆1891☆

evidence on file that he received any bounty. To receive pay from Aug. 31/65 and Transportation. Balance of [redacted] pended for future action

JAN. 14 6181658 ☆1891☆

G | 11 Ky. Art. | U.S.C.T.

George Garner

Pvt., Co. K, 11th Reg't U.S.C.H.A.

NOTATION.

Book mark: R.P. 708693.

Record and Pension Office,

WAR DEPARTMENT,

Washington. March 9, 1903

It has this day (March 9, 1903)

been determined by this Department from the records that the above-named soldier was discharged the service October 2, 1865, by reason of the muster out of his company on that date, and that no muster-out rolls on file records as shows that he was mustered out of service October 21, 1865, is erroneous.

W. H. Gibson

(440) *Copyist.*

Garner George

Pvt, Co. K, 11 Reg't Mass Inf.

5 Enclosures.

Bed Cards		Final Statements	
Burial Records		Furloughs or L. of A.	
Certs. of Dis. for Discharge		Med. Certificates	
C. M. Charges	2	Med. Des. Lists	
Descriptive Lists		Orders	
Discharge Certificates		Pris. of War Record	
Enlistment Papers	1	Resignations	

Other papers relating to—

Admission to Hosp'l		Furlough or L. of A.	
Casualty Sheet	1	Med. Examination	
Confinement		Misc. Information	1
Contracts		Pay or Clothing	
Death or Effects		Personal Reports	
Desertion		Rank	
Discharge from Hosp'l		Transfer to Hosp'l	
Discharge from Service		Transfer to V. R. C.	
Duty		Transportation	

DECLARATION OF RECRUIT.

George Garner desiring to VOLUNTEER as a Soldier in the *ARMY OF THE UNITED STATES*, for the term of three years do declare that I am 21 years and months of age; that I have never been discharged from the United States service on account of disability or by sentence of a court martial, or by order, before the expiration of a term of enlistment; and I know of no impediment to my serving honestly and faithfully as a soldier for three years

Given at Roy

The 4th day of Dec 1863

Witness J. W. Pruitt

his
George X Garner
mark

11 U.S. Cav.

No.

Enlisted George Garner

Volunteered at Roy

Dec 4 1863

By Maj. Lee Eng.

14 Regiment of

enlistment; last served in Company ( )

Reg't of

Discharged 18

CONSENT IN CASE OF MINOR.

Do Certify that I am the

of ; that the said

is years of age; and I do hereby freely give

my CONSENT to his volunteering as a SOLDIER in the ARMY OF THE UNITED STATES for the period of

Given at

The day of

Witness:

VOLUNTEER ENLISTMENT.

State of R. I.

Town of Providence

I, George Garner born in Winchester

in the State of Virginia aged 21 years, and by occupation a Farmer

DO HEREBY ACKNOWLEDGE to have volunteered this 4th day of Dec 1863 to serve as a SOLDIER in the ARMY OF THE UNITED STATES OF AMERICA, for the period of three years, unless sooner discharged by proper authority: Do also agree to accept such bounty, pay, rations and clothing, as are, or may be, established, by law for volunteers. And I, George Garner do solemnly swear, that I will bear true faith and allegiance to the *United States of America*, and that I will serve them honestly and faithfully against all their enemies or opposers whomsoever; and that I will observe and obey the orders of the President of the United States, and the orders of the officers appointed over me, according to the Rules and Articles of War.

Sworn and Subscribed to, at Providence this 4th day of Dec 18 63 BEFORE Me John Lathrop Public Notary

his
George X Garner
mark

I CERTIFY, ON HONOR, That I have carefully examined the above-named Volunteer, agreeable to the General Regulations of the Army, and that, in my opinion, he is free from all bodily defects and mental infirmity, which would, in any way, disqualify him from performing the duties of a soldier.

Johnson Sanders M.D.

EXAMINING SURGEON.

I CERTIFY, ON HONOR, That I have minutely inspected the Volunteer, George Garner previously to his enlistment, and that he was entirely sober when enlisted; that to the best of my judgment and belief, he is of lawful age; and that, in accepting him as duly qualified to perform the duties of an able-bodied soldier, I have strictly observed the Regulations which govern the recruiting service. This soldier has African *complexion*, is Five *feet*, 9½ *inches high*. black *eyes* black *hair*

Major, 14 *Regiment of* Hy Art'y *Volunteers*,

RECRUITING OFFICER.

Gardner George
Private Co. K 11th U.S.C.C. Art.

Charge & Specification
preferred against.

Filed June 24
1865

Ltr'd Battl. Hd. Qrs. May 21. 1865.

18

8

Charge and Specification preferred against George Gardner. Private of Company "K" 11th U.S.C.T. (4th)

Charge — Neglect of duty, to the prejudice of good order and military discipline.

Specification — That George Gardner Private of Company "K" 11th U.S.C.T. (4th) being duly detailed for fatigue was absent during the whole time of such duty without permission from proper authority.

This at Carrollton La. on or about the 12th day of May 1864.

N. F. Cameron
1st Lt. 11th U.S.C.T. (4th)
Officer Preferring Charge

Witnesses — Richard Clark, Sergt Co "I" 11th U.S.C.T. (4th)
William Long " "K" "

Gardiner George

Private 6th K 11th D.C. Cav. 11pp

Charge & Specification preferred against.

one Quarter Ration Bread Bath 2nd July 10 1865

Charges and Specifications preferred against George Gardner Private of Co. "K" 11. U. S. C. A. (H.)

Charge 1; — Sleeping on Post.

Specification; — That George Gardner, Private Co. "K" 11. U. S. C. A. (H.) being duly posted as a sentry at Camp Parapet — did sit down and fall asleep, on his post between the hours of ten and eleven o'clock P. M. on or about the ninth day of July 1865.

All this at or near Camp Parapet La. on or about the ninth day of July 1865.

J. L. Belcher 2nd. Lt. 11. U. S. C. A. (H.)
Officer preferring Charges.

Witness; J. C. Belcher 2nd. Lt. 11. U. S. C. A. (H.).

15-

CASUALTY SHEET

No. .....

Geo. Garner

Priv. of Company K

11 Regiment of U.S.C. Art.

State Volunteers.

NATURE OF CASUALTY.

Ac. Gun

Oct. 26/65

ADJUTANT GENERAL'S OFFICE
APR
30
1869

CASUALTY SHEET.

Name: Geo. Garner

Rank: Sgt. *Company:* G *Regiment:* 11

Arm: Co. Arty. *State:* U.S.

Nature of Casualty: In. Ord

CAUSE OF CASUALTY—(NAME OF DISEASE, &C.)

DEGREE OF DISABILITY.

BY WHOM CERTIFIED.

W. Webster
Disbursg. U.S.A.

DATE OF DISCHARGE, DEATH, &c.

Oct. 26 1863

PLACE OF DISCHARGE, DEATH, &c.

Davis Isld, N.Y.H.

BY WHOM DISCHARGED.

FROM WHAT SOURCE THIS INFORMATION WAS OBTAINED.

Roll 59 Lucbamp Hosp, N.Y.H.

REMARKS.

A Tucker

Clerk.

(170)

Ms Ellsbrook, ——

George Garner

Co "K" 11th W.S.L. Atty Hy

Adjutant General's Office,

COLORED TROOPS BRANCH,

January 12, 1876

Mr. Ellenbrook ~~Vol. C. T., 187~~

Wanted in the case of George Garner, Co. "K",
11th Reg't U.S.C. Artly Hvy
Copy of sentence, &c
Muster Roll for July and
August '65. reports him Present with remark
"Loss of $24.00 of his pay by sentence G.O.
June 21 '65"

Respectfully,

R. A. Woodward
Chief Clerk.

Adjutant General's Office,

Div. of Discontinued Cases

June 28, 1876

Vol. C. T., 187

Reply in case of George Garner, Co. K,
11 Reg't U.S. Col. Artly Hy.
G.O. No. 16. Hdqrs. 3 Batt'n 11 U.S. Col. Artly Hy. June 29. 65.
Charge. — Conduct to the prejudice of good order & mil. discipline
Findings. — Guilty. — Sentence — To forfeit to the U.S.
Eight Dollars of his monthly pay. — Approved.
In this case he is reported as Geo. Gardiner Co K —
and Gardiner appears on Descr book Co K. —
G.O. No. 18. 3 Batt'n 11 U.S. Col. Artly Hy. July 21. 1865
1. Charge. — Conduct to the prejudice of good order
and military discipline. — Findings. — Guilty. —
Sentence. — To forfeit sixteen dollars of his monthly
pay for one month. — Approved.

Date	Prin

CARD NUMBERS.

1878	26
1134	27
1841	28
1340	29
1941	30
1534	31
1199	32
1942	33
1082	34
1217	35
1342	36
194470	37
1195889	38
1125631	39
	40
	41
	42
	43
	44
	45
	46
	47
	48
	49
	50

See also

$1,192.1480 P.O. Jr mm
M.S. 12/1/13
3013860 auld wd
P.O. Misc of 385987 4/3/16 TMS

J. B. Dowd
Ex

G | 11 H. Art'y. | U.S.C.T.

James H. C. Garner

, Co. K, 11 Reg't U. S. Col'd H. Art'y.

Appears on

Company Descriptive Book

of the organization named above.

DESCRIPTION.

Age 18 years; height 5 feet 8 inches.

Complexion Dk

Eyes Dk; hair Blk

Where born Chester N. Y.

Occupation Farmer

ENLISTMENT.

When Nov 27, 186 .

Where Prov R. I.

By whom J. B. Engly; term 3 y'rs.

Remarks: Mustered out Oct 2/65

Griffith

(3830) Copyist.

G | 11 H. Art'y. | U.S.C.T.

James H. Gaines

Pt., Co. K, 14 Reg't R. I. Col'd H. Art'y.*

Age 18 years.

Appears on

Company Muster-in Roll

of the organization named above. Roll dated Cp. nr. Providence R.I. Dec 17, 1863.

Muster-in to date Dec 17, 1863.

Joined for duty and enrolled:

When Nov 27, 1863.

Where Providence

Period 3 years.

Valuation of horse, $ 100

Valuation of horse equipments, $ 100

Remarks:

* This organization subsequently became Co. A, 11 Reg't U. S. Colored Heavy Artillery.

Book mark:

J. K. Stewart

(356) Copyist.

G | 11 H. Art'y. | U.S.C.T.

James H. Garner

Pt, Co. K, 14 Reg't R. I. Col'd H. Art'y.*

Appears on

Company Muster Roll

for Dec 1/63 to Dec 31/, 1863

Present or absent Present

Stoppage, $ 100 for

Due Gov't, $ 100 for

Valuation of horse, $ 100

Valuation of horse equipments, $ 100

Remarks:

*This organization subsequently became Co. K, 11 Reg't U. S. Colored Heavy Artillery.

Book mark:

(358) J. H. Stewart
Copyist.

G | 11 H. Art'y. | U.S.C.T.

James N. C. Garner

A, Co. K, 14 Reg't R. I. Col'd H. Art'y.*

Appears on

Company Muster Roll

for Jan & Feb, 1864.

Present or absent Present

Stoppage, $ 100 for

Due Gov't, $ 100 for

Valuation of horse, $ 100

Valuation of horse equipments, $ 100

Remarks:

*This organization subsequently became Co. K, 11 Reg't U. S. Colored Heavy Artillery.

Book mark:

J N Seward

(358) *Copyist.*

G | 11 H. Art'y. | U.S.C.T.

James H. C. Garner

Pt

, Co. K, 14 Reg't R. I. Col'd H. Art'y.*

Appears on

Company Muster Roll

for Mch & Apl, 1864.

Present or absent Present X

Stoppage, $ 100 for

Due Gov't, $ 100 for

Valuation of horse, $ 100

Valuation of horse equipments, $ 100

Remarks: Stop for wife per $20

*This organization subsequently became Co. K, 11 Reg't U. S. Colored Heavy Artillery.

Book mark:

J H Stewart

(358) *Copyist.*

E | 11 H. Art'y. | U.S.C.T.

Samuel R. Tanner

Pvt, Co. L, 8 Reg't U. S. Col'd H. Art'y.*

Appears on

Company Muster Roll

for May & June, 1864.

Present or absent Present

Stoppage, $ 100 for

Due Gov't, $ 100 for

Valuation of horse, $ 100

Valuation of horse equipments, $ 100

Remarks:

† This organization subsequently became Co. K, 11 Reg't U. S. Colored Heavy Artillery.

Book mark:

R Tunnard

(358) Copyist.

G | 11 H. Art'y. | U.S.C.T.

James H. Garner

Pvt., Co. K, 11 Reg't U. S. Col'd H. Art'y.

Appears on

Company Muster Roll

for July & Aug., 1864.

Present or absent Present

Stoppage, $ 100 for

Due Gov't, $ 30/100 for C.H.E. lost or destroyed

Valuation of horse, $ 100

Valuation of horse equipments, $ 100

Remarks: Transferred April 1st 1864 from Co. K 11th Regt U.S.C.H.A. to Co. G 11th Regt U.S.C.H.A.

Book mark:

E. Elwood,
Copyist.

G | 11 H. Art'y. | U.S.C.T.

James H. Garner

Pvt, Co. K, 11 Reg't U. S. Col'd H. Art'y.

Appears on

Company Muster Roll

for Sept & Oct, 1864.

Present or absent Present.

Stoppage, $ 100 for

Due Gov't, $ 18/100 for Camp & Garrison Equipage

Valuation of horse, $ 100

Valuation of horse equipments, $ 100

Remarks:

Book mark:

(358) R. Stewart
Copyist.

G | 11 H. Art'y. | U.S.C.T.

James H Garner

Pvt, Co. K, 11 Reg't U. S. Col'd H. Art'y.

Appears on

Company Muster Roll

for Nov & Dec, 1864.

Present or absent Present

Stoppage, $ ---- 100 for ----

Due Gov't, $ 82 100 for Clothing

Valuation of horse, $ ---- 100

Valuation of horse equipments, $ ---- 100

Remarks: Drew C.S. for C. & G. 2. 93 Cts

Book mark: ----

Copyist.

G | 11 H. Art'y. | U.S.C.T.

James H. Garner

Pvt, Co. K, 11 Reg't U. S. Col'd H. Art'y.

Appears on

Company Muster Roll

for Jan & Feb, 1865.

Present or absent Present.

Stoppage, $ 100 for

Due Gov't, $ 22/100 for Allowance

Valuation of horse, $ 100

Valuation of horse equipments, $ 100

Remarks: Duck S bon
C. & G. C., 03 Cts

Book mark:

R. Stewart

Copyist.

C	11 H. Art'y.	U.S.C.T.

Spencer F. Haines

Pvt, Co. K, 11 Reg't U. S. Col'd H. Art'y.

Appears on

Company Muster Roll

for March & April, 1865.

Present or absent Present.

Stoppage, $ 100 for

Due Gov't, $ 42 100 for Clothing.

Valuation of horse, $ 100

Valuation of horse equipments, $ 100

Remarks: Due U S for
C. & G. E. of Clo.

Book mark:

(358) Edward C

Copyist.

G | 11 H. Art'y. | U.S.C.T.

James H. Garner

Pvt, Co. K, 11 Reg't U. S. Col'd H. Art'y.

Appears on

Company Muster Roll

for May & June, 1865.

Present or absent Present

Stoppage, $ 100 for

Due Gov't, $ 99/100 for Clothing

Valuation of horse, $ 100

Valuation of horse equipments, $ 100

Remarks:

Book mark:

Gruchow

Copyist.

G | 11 H. Art'y. | U.S.C.T.

James H. Garner

Pvt, Co. K, 11 Reg't U. S. Col'd H. Art'y.

Appears on

Company Muster Roll

for July & Aug, 1865.

Present or absent Present

Stoppage, $ 100 for

Due Gov't, $ 19/100 for C & E lost and destroyed

Valuation of horse, $ 100

Valuation of horse equipments, $ 100

Remarks: Due U. S. for Ordnance lost and destroyed 40 L

Book mark:

Gruchon

(358) Copyist.

J | 11 H. Art'y. | U.S.C.T.

James H. Garner

Pvt., Co. K, 11 Reg't U. S. Col'd H. Art'y.

Appears on **Co. Muster-out Roll,** dated New Orleans, La., Oct 2, 1865.

Muster-out to date Oct. 2, 1865.

Last paid to Feb. 28, 1865.

Clothing account:

Last settled ....., 186 ; drawn since $ 100

Due soldier $ ..... 100 ; due U. S. $ 18 00/100

Am't for cloth'g in kind or money adv'd $ 100

Due U. S. for arms, equipments, &c., $ 6 49/100

Bounty paid $ None 100 ; due $ 100 00/100

Remarks: Joined at Cin. Organ. Mopped 2 stripes, 4 Eagles, & 1 No. "1" Lost. 1 Musket & Equipments retained.

Book mark:

Spicher

Garman James H.

P, Co. , 11 Reg't Mass Inf

1 **Enclosures.**

Bed Cards	Final Statements
Burial Records	Furloughs or L. of A.
Certs. of Dis. for Discharge	Med. Certificates
C. M. Charges	Med. Des. Lists
Descriptive Lists	Orders
Discharge Certificates	Pris. of War Record
Enlistment Papers 1	Resignations

Other papers relating to—

Admission to Hosp'l	Furlough or L. of A.
Casualty Sheet	Med. Examination
Confinement	Misc. Information
Contracts	Pay or Clothing
Death or Effects	Personal Reports
Desertion	Rank
Discharge from Hosp'l	Transfer to Hosp'l
Discharge from Service	Transfer to V. R. C.
Duty	Transportation

DECLARATION OF RECRUIT.

I, James B. Gannan desiring to VOLUNTEER as a Soldier in the *ARMY OF THE UNITED STATES*, for the term of 3 years do declare that I am 18 years and months of age; that I have never been discharged from the United States service on account of disability or by sentence of a court martial, or by order, before the expiration of a term of enlistment; and I know of no impediment to my serving honestly and faithfully as a soldier for

Given at Pittsburgh

The 27th day of Nov 1863

Witness:
E. A. Mackey

James B. Gannan
Mark

11 U.S.C.A.

No.

Enrolled at Pittsburgh

Volunteered at Pittsburgh

Nov 27 1863

By Maj. E. A. Mackey

14th Regt

Regiment of 14th Regt

enlistment; last served in Company ( ) *under the name of* ( )

Reg't of

Discharged 18

RECEIVED
JAN 11
1871

CONSENT IN CASE OF MINOR.

I, Do CERTIFY that I am the

of ; that the said

is years of age; and I do hereby freely give

my CONSENT to his volunteering as a SOLDIER in the ARMY OF THE UNITED STATES for the period of

Given at

The day of

Witness:

VOLUNTEER ENLISTMENT.

State of Rhode Island Town of Providence.

I, James H. Garman born in Johnston in the State of New York aged 18 years, and by occupation a Farmer DO HEREBY ACKNOWLEDGE to have volunteered this 27th day of Nov 1863 to serve as a SOLDIER in the ARMY OF THE UNITED STATES OF AMERICA, for the period of 3 years, unless sooner discharged by proper authority: Do also agree to accept such bounty, pay, rations and clothing, as are, or may be, established, by law for volunteers. And I, James H. Garman do solemnly swear, that I will bear true faith and allegiance to the *United States of America*, and that I will serve them honestly and faithfully against all their enemies or opposers whomsoever; and that I will observe and obey the orders of the President of the United States, and the orders of the officers appointed over me, according to the Rules and Articles of War.

Sworn and Subscribed to, at Providence R.I. this 27th day of Nov 1863 BEFORE John L Noyes Public Notary

James H. Garman
Mark

I CERTIFY, ON HONOR, That I have carefully examined the above-named Volunteer, agreeable to the General Regulations of the Army, and that, in my opinion, he is free from all bodily defects and mental infirmity, which would, in any way, disqualify him from performing the duties of a soldier.

Johnson Sawdey MD

EXAMINING SURGEON.

I CERTIFY, ON HONOR, That I have minutely inspected the Volunteer, James H. Garman previously to his enlistment, and that he was entirely sober when enlisted; that to the best of my judgment and belief, he is of lawful age; and that, in accepting him as duly qualified to perform the duties of an able-bodied soldier, I have strictly observed the Regulations which govern the recruiting service. This soldier has Dark *eyes* Black *hair* Dark *complexion*, is 5 *feet*, 8 *inches high*.

May 14th *Regiment of* Ry Artly *Volunteers*,

RECRUITING OFFICER.

[illegible], 11 U.S. Col'd H.A.

State	State

CARD NUMBERS.

6202072	26
6201553	27
6201709	28
6201868	29
6202025	30
6202171	31
6202322	32
6202449	33
6202570	34
6202853	35
6202796	36
6202899	37
91259948	38
	39
	40
	41
	42
	43
	44
	45
	46
	47
	48
	49
	50

Book Mark:

See also

D.1322123 P.O. Matter
I&S-3/23/36 Mimeo

J. B. Downs
Ex

G | 11 H. Art'y. | U.S.C.T.

Andrew Garnett

, Co M, 11 Reg't U. S. Col'd H. Art'y.

Appears on

Company Descriptive Book

of the organization named above.

DESCRIPTION.

Age 18 years; height 5 feet 2 inches.

Complexion DK

Eyes Blk; hair Blk

Where born Virginia

Occupation Farmer

ENLISTMENT.

When Dec 21, 1863.

Where Prov R.I.

By whom J.C. Engly; term 3 y'rs.

Remarks: Mustered into U.S.
Service Jan 25, 1864
Assigned to Co M Feb 5 1864
Mustered out

Griffiths

(383y) Copyist.

G | 11 H. A. | U.S.C.T.

Andrew Garnett

Pvt., Co. ....., 11 Reg't U. S. Col'd (14th R.I. Col'd H.A.) H.A.

Age 2 years.

Appears on a

Detachment Muster-in Roll

of the organization named above. Roll dated

Providence R.I., Feb 29, 1864.

Muster-in to date Feby 5, 1864.

Joined for duty and enrolled:

When ....., 186 .

Where .....

Period ..... years.

Valuation of horse, $ 100

Valuation of horse equipments, $ 100

Remarks: Mustered in Feby 5/64

Roll torn

Book mark: .....

C M Jackson

Copyist.

G | 11 H. Art'y. | U.S.C.T.

Andrew Garnett

Pvt., Co. M, 14 Reg't R. I. Col'd H. Art'y.*

Appears on

Company Muster Roll

for 23 Jan'y & 29 Feb'y, 1864.

Present or absent Present

Stoppage, $ 100 for

Due Gov't, $ 100 for

Valuation of horse, $ 100

Valuation of horse equipments, $ 100

Remarks:

(Enrolled Dec 21/63
at Prov. R. I. for 3 yrs.)

This organization subsequently became Co. M, 11 Reg't U. S. Colored Heavy Artillery.

Book mark:

J Underwood

Copyist.

G | 11 H. Art'y. | U.S.C.T.

Andrew Garnett

Pvt., Co. M, 14 Reg't R. I. Col'd H. Art'y.*

Appears on

Company Muster Roll

for March & April, 1864.

Present or absent Present

Stoppage, $.....100 for .....

.....

.....

Due Gov't, $.....100 for .....

.....

Valuation of horse, $.....100

Valuation of horse equipments, $.....100

Remarks:.....

.....

.....

.....

.....

.....

.....

This organization subsequently became Co. M, 11 Reg't U. S. Colored Heavy Artillery.

Book mark:.....

J. Mackenzie

Copyist.

4 | 11 H. Art'y. | U.S.C.T.

Manuel Garnett

Pvt., Co. M, 8 Reg't U. S. Col'd H. Art'y.*

Appears on

Company Muster Roll

for May & June, 1864

Present or absent Present

Stoppage, $ 100 for

Due Gov't, $ 100 for

Valuation of horse, $ 100

Valuation of horse equipments, $ 100

Remarks:

† This organization subsequently became Co. M, 11 Reg't U. S. Colored Heavy Artillery.

Book mark:

Tabler

(358) *Copyist.*

G | 11 H. Art'y. | U.S.C.T.

Andrew Gannett

Pvt, Co. M, 11 Reg't U. S. Col'd H. Art'y.

Appears on

Company Muster Roll

for dated Sept. 1, 1864.

Present or absent Present

Stoppage, $ 100 for

Due Gov't, $ 100 for

Valuation of horse, $ 100

Valuation of horse equipments, $ 100

Remarks: $6 per M. due from enlistment to Apl. 30/64. Free on 19th Apl. 1861.

Book mark:

(358) Tabler
Copyist.

G | 11 H. Art'y. | U.S.C.T.

Andrew Garnett

Pvt., Co. M, 11 Reg't U. S. Col'd H. Art'y.

Appears on

Company Muster Roll

for Sept & Oct, 1864.

Present or absent Present

Stoppage, $ 100 for

Due Gov't, $ 100 for

Valuation of horse, $ 100

Valuation of horse equipments, $ 100

Remarks:

Book mark:

A. Hubbell

Copyist.

G | 11 H. Art'y. | U.S.C.T.

Andrew Garnett

Pvt., Co. M, 11 Reg't U. S. Col'd H. Art'y.

Appears on

Company Muster Roll

for Nov & Dec, 1864.

Present or absent Present

Stoppage, $ 40/100 for Ordnance Stores

Due Gov't, $ 100 for

Valuation of horse, $ 100

Valuation of horse equipments, $ 100

Remarks:

Book mark:

A. Hubbell

Copyist.

G | 11 H. Art'y. | U.S.C.T.

Taliaferro-Garnett

Pvt., Co. M, 11 Reg't U. S. Col'd H. Art'y.

Appears on

Company Muster Roll

for Jan & Feb, 1865.

Present or absent Present

Stoppage, $ 100 for

Due Gov't, $ 100 for

Valuation of horse, $ 100

Valuation of horse equipments, $ 100

Remarks:

Book mark:

C. A. Hubbell

Copyist.

G | 11 H. Art'y. | U.S.C.T.

Andrew Garnett

Pvt; Co. M, 11 Reg't U. S. Col'd H. Art'y.

Appears on

Company Muster Roll

for Mch & Apl 65, 1865:

Present or absent Present

Stoppage, $ 100 for

Due Gov't, $ 100 for

Valuation of horse, $ 100

Valuation of horse equipments, $ 100

Remarks:

Book mark:

A. Stubbee

(358) *Copyist.*

G | 11 H. Art'y. | U.S.C.T.

Andrew Garnett

Priv., Co. M, 11 Reg't U. S. Col'd H. Art'y.

Appears on

Company Muster Roll

for May & June, 1865.

Present or absent Present

Stoppage, $ 100 for

Due Gov't, $ 100 for

Valuation of horse, $ 100

Valuation of horse equipments, $ 100

Remarks:

Book mark:

A. Garnett

(358) *Copyist.*

G. | 11 H. Art'y. | U.S.C.T.

Andrew Garnett

Priv., Co. M, 11 Reg't U. S. Col'd H. Art'y.

Appears on

Company Muster Roll

for July & Aug, 1865.

Present or absent Present

Stoppage, $ 100 for

Due Gov't, $ 100 for

Valuation of horse, $ 100

Valuation of horse equipments, $ 100

Remarks:

Book mark:

Garnett

Copyist.

G. | 11 H. Art'y. | U.S.C.T.

Andrew Garnett

Priv., Co. M, 11 Reg't U. S. Col'd H. Art'y.

Appears on **Co. Muster-out Roll,** dated New Orleans La, Oct 2, 1865.

Muster-out to date Oct 2, 1865.

Last paid to Feb 28, 1865.

Clothing account:

Last settled ....., 186 ; drawn since $ 100

Due soldier $ ..... 100 ; due U. S. $ 1 99/100

Am't for cloth'g in kind or money adv'd $ 100

Due U. S. for arms, equipments, &c., $ 2 25/100

Bounty paid $ ..... 100 ; due $ 100 00/100

Remarks: Joined at original organization. Stop for one Musket & accoutrements retained 1 Bed Sack lost. (Age 18.)

Book mark: V. 250. P. 104. - 78.

Garnett

(861) *Copyist.*

Garnett Andrew

C, Co. ——, 11 Reg't Miss Vol

1 Enclosures.

Bed Cards	Final Statements
Burial Records	Furloughs or L. of A.
Certs. of Dis. for Discharge	Med. Certificates
C. M. Charges	Med. Des. Lists
Descriptive Lists	Orders
Discharge Certificates	Pris. of War Record
Enlistment Papers 1	Resignations

Other papers relating to—

Admission to Hosp'l	Furlough or L. of A.
Casualty Sheet	Med. Examination
Confinement	Misc. Information
Contracts	Pay or Clothing
Death or Effects	Personal Reports
Desertion	Rank
Discharge from Hosp'l	Transfer to Hosp'l
Discharge from Service	Transfer to V. R. C.
Duty	Transportation

DECLARATION OF RECRUIT.

I, Andrew Gannett desiring to VOLUNTEER as a Soldier in the *ARMY OF THE UNITED STATES*, for the term of 3 years do declare that I am 18 years and ——— months of age; that I have never been discharged from the United States service on account of disability or by sentence of a court martial, or by order, before the expiration of a term of enlistment; and I know of no impediment to my serving honestly and faithfully as a soldier for 3 years

Given at Providence

The 21st day of Dec 1863

Witness: S Mahaso

Andrew his + Gannett mark

11 U.S.C. H.Q.,
4th Div. 2d Corps

Volunteered at Providence

on the 21st *day of* Dec 1863,

By Lt Col Engley

to serve 3 years

14th Regiment of Heavy Artillery

enlistment; last served in Company (

Reg't of

Discharged 18

JUL 11 1871

CONSENT IN CASE OF MINOR.

I, Do CERTIFY that I am the

of ; that the said

is years of age; and I do hereby freely give

my CONSENT to his volunteering as a SOLDIER in the ARMY OF THE UNITED STATES for the period of

Given at

The day of

Witness

VOLUNTEER ENLISTMENT.

State of Rhode Island Town of Providence

I, Andrew Gannett born in Virginia in the State of aged 18 years, and by occupation a Farmer DO HEREBY ACKNOWLEDGE to have volunteered this 21st day of Dec 1863 to serve as a SOLDIER in the ARMY OF THE UNITED STATES OF AMERICA, for the period of 3 Years, unless sooner discharged by proper authority: Do also agree to accept such bounty, pay, rations and clothing, as are, or may be, established, by law for volunteers. And I, Andrew Gannett do solemnly swear, that I will bear true faith and allegiance to the *United States of America*, and that I will serve them honestly and faithfully against all their enemies or opposers whomsoever; and that I will observe and obey the orders of the President of the United States, and the orders of the officers appointed over me, according to the Rules and Articles of War.

Sworn and Subscribed to, at Providence this 21st day of Dec 1863 BEFORE Mr John Edwyn Public Notary

his
Andrew + Gannett
mark

I CERTIFY, ON HONOR, That I have carefully examined the above-named Volunteer, agreeable to the General Regulations of the Army, and that, in my opinion, he is free from all bodily defects and mental infirmity, which would, in any way, disqualify him from performing the duties of a soldier.

Johnson Gardner M.D.

EXAMINING SURGEON.

I CERTIFY, ON HONOR, That I have minutely inspected the Volunteer, Andrew Gannett previously to his enlistment, and that he was entirely sober when enlisted; that to the best of my judgment and belief, he is of lawful age; and that, in accepting him as duly qualified to perform the duties of an able-bodied soldier, I have strictly observed the Regulations which govern the recruiting service. This soldier has Black *eyes* Black *hair* Dark *complexion*, is 5 *feet*, 2 *inches high*.

J. Edwyn

May 14 *Regiment of* 4th Cavalry *Volunteers*,

RECRUITING OFFICER.

CARD NUMBERS.

23538

26
27
28
29
30
31
32
33
34
35
36
37
38
39
40
41
42
43
44
45
46
47
48
49
50

G | 9 H. Art'y. | U.S.C.T.

*Addison Garrett

....., Co. E, 9 Reg't U. S. Col'd H. Art'y.

Appears on

Company Descriptive Book

of the organization named above.

DESCRIPTION.

Age ..... years; height ..... feet ..... inches.

Complexion .....

Eyes ..... ; hair .....

Where born .....

Occupation .....

ENLISTMENT.

When ....., 186 .

Where .....

By whom ..... ; term ..... y'rs.

Remarks: .....

*Cancelled by line drawn through

Hadfield

(383g) Copyist.

Name of Soldier

Co. B, 11 U.S. Col'd H. Art'y.

Private | Private

CARD NUMBERS.

1	6183882	26	
2	6184026	27	
3	6184775	28	
4	6184518	29	
5	6184457	30	
6	6184594	31	
7	6184723	32	
8	6184850	33	
9	6184966	34	
10	6185080	35	
11	6185190	36	
12	6185298	37	
13	6185407	38	
14	9124133	39	
15	9124274	40	
16		41	
17		42	
18		43	
19		44	
20		45	
21		46	
22		47	
23		48	
24		49	
25		50	

Book Mark:

See also

MAR 1 1938

#1576447. 2.0. Morse

OM & Wdetone 4-17-37 Cmth

J. B. Donal

G | 11 H. Art'y. | U.S.C.T.

George Garrison

, Co B, 11 Reg't U. S. Col'd H. Art'y.

Appears on

Company Descriptive Book

of the organization named above.

DESCRIPTION.

Age 21 years; height 5 feet 9 inches.

Complexion Dk

Eyes Blk; hair Blk

Where born Harlem N.Y.

Occupation Hostler

ENLISTMENT.

When Aug 24, 1863.

Where Pov. R I

By whom Maj Swyford; term 3 y'rs.

Remarks:

(383y) Copyist.

G | 11 H. Art'y. | U.S.C.T.

John Garrison

, Co B, 11 Reg't U. S. Col'd H. Art'y.

Appears on

Company Descriptive Book

of the organization named above.

DESCRIPTION.

Age 21 years; height 5 feet 4 inches.

Complexion Dk

Eyes Blk; hair Blk

Where born Harlem NY

Occupation Hostler

ENLISTMENT.

When May 24, 186 .

Where Providence

By whom Maj Simmons; term 3 y'rs.

Remarks:

James

(383g) Copyist.

G. | 11 H. Art'y. | U.S.C.T.

John Garrison

Pvt., Co. B., 14 Reg't R. I. Col'd H. Art'y.*

Age 21 years.

Appears on

Company Muster-in Roll

of the organization named above. Roll dated Providence R.I., Sept 14, 1863.

Muster-in to date Sept 14, 1863.

Joined for duty and enrolled:

When Aug. 24, 186 .

Where Providence

Period 3 years.

Valuation of horse, $ 100

Valuation of horse equipments, $ 100

Remarks:

* This organization subsequently became Co. B, 11 Reg't U. S. Colored Heavy Artillery.

Book mark:

J. Walker

Copyist.

G. | 11 H. Art'y. | U.S.C.T.

John Garrison

Pvt., Co. B, 14 Reg't R. I. Col'd H. Art'y.*

Appears on

Company Muster Roll

for Sept 14 to Dec 31, 1863.

Present or absent Present

Stoppage, $.....100 for .....

.....

Due Gov't, $.....100 for .....

.....

Valuation of horse, $.....100

Valuation of horse equipments, $.....100

Remarks:.....

.....

.....

.....

.....

.....

.....

*This organization subsequently became Co. B, 11 Reg't U. S. Colored Heavy Artillery.

Book mark:.....

J. Walker

(358) *Copyist.*

G. | 11 H. Art'y. | U.S.C.T.

John Garrison

Pvt., Co. B, 14 Reg't R. I. Col'd H. Art'y.*

Appears on

Company Muster Roll

for Jan. & Feb., 1864.

Present or absent Present

Stoppage, $ 100 for

Due Gov't, $ 100 for

Valuation of horse, $ 100

Valuation of horse equipments, $ 100

Remarks:

*This organization subsequently became Co. B, 11 Reg't U. S. Colored Heavy Artillery.

Book mark:

J. Walker

(358) *Copyist.*

G | 11 H. Art'y. | U.S.C.T.

John Garrison

Pvt., Co. B, 8 Reg't U. S. Col'd H. Art'y.*

Appears on

Company Muster Roll

for Mch & Apl, 1864

Present or absent Present

Stoppage, $ 100 for

Due Gov't, $ 100 for

Valuation of horse, $ 100

Valuation of horse equipments, $ 100

Remarks:

†This organization subsequently became Co. B, 11 Reg't U. S. Colored Heavy Artillery.

Book mark:

J. Walker

Copyist.

G. | 11 H. Art'y. | U.S.C.T.

John Garrison

Pvt., Co. B, 8 Reg't U. S. Col'd H. Art'y.*

Appears on

Company Muster Roll

for May & June, 1864.

Present or absent Present

Stoppage, $ 100 for

Due Gov't, $ 100 for

Valuation of horse, $ 100

Valuation of horse equipments, $ 100

Remarks:

*This organization subsequently became Co. B, 11 Reg't U. S. Colored Heavy Artillery.

Book mark:

(358)

T. Walker
Copyist.

ly | **11** H. Art'y. | **U.S.C.T.**

John Garrison

Pri., Co. B, 11 Reg't U. S. Col'd H. Art'y.

Appears on

Company Muster Roll

for July & Aug, 1864.

Present or absent Present

Stoppage, $ ---- 100 for ----

Due Gov't, $ ---- 100 for ----

Valuation of horse, $ ---- 100

Valuation of horse equipments, $ ---- 100

Remarks: Free Apr 19/61

Book mark : ----

O. W. Swaine

(358) *Copyist.*

G | 11 H. Art'y. | U.S.C.T.

John Garrison

Pvt., Co. B, 11 Reg't U. S. Col'd H. Art'y.

Appears on

Company Muster Roll

for Sept & Oct, 1864.

Present or absent Present

Stoppage, $ 100 for

Due Gov't, $ 100 for

Valuation of horse, $ 100

Valuation of horse equipments, $ 100

Remarks:

Book mark:

D. M. Moore

(358) *Copyist.*

| | 11 H. Art'y. | U.S.C.T.

John Garrison

Pri., Co. B, 11 Reg't U. S. Col'd H. Art'y.

Appears on

Company Muster Roll

for Nov & Dec, 1864.

Present or absent Present

Stoppage, $ 100 for

Due Gov't, $ 100 for

Valuation of horse, $ 100

Valuation of horse equipments, $ 100

Remarks:

Book mark:

D. M. Moore

(358) *Copyist.*

| 11 H. Art'y. | U.S.C.T.

John Garrison

Pri., Co. B, 11 Reg't U. S. Col'd H. Art'y.

Appears on

Company Muster Roll

for Jan & Feb, 186 5.

Present or absent Present

Stoppage, $ 100 for

Due Gov't, $ 100 for

Valuation of horse, $ 100

Valuation of horse equipments, $ 100

Remarks:

Book mark:

D. N. Moore

(358) Copyist.

G | 11 H. Art'y. | U.S.C.T.

John Garrison

Pri., Co. B, 11 Reg't U. S. Col'd H. Art'y.

Appears on

Company Muster Roll

for Mch & Apr, 186 5.

Present or absent Present

Stoppage, $ 100 for

Due Gov't, $ 100 for

Valuation of horse, $ 100

Valuation of horse equipments, $ 100

Remarks:

Book mark:

O. W. Moore

(358) *Copyist.*

G | 11 H. Art'y. | U.S.C.T.

John Garrison

Pvt., Co. B, 11 Reg't U. S. Col'd H. Art'y.

Appears on

Company Muster Roll

for May & June, 1865.

Present or absent Present

Stoppage, $ 100 for

Due Gov't, $ 100 for

Valuation of horse, $ 100

Valuation of horse equipments, $ 100

Remarks:

Book mark:

(358) Zoyberger *Copyist.*

2 | 11 H. Art'y. | U.S.C.T.

Private Edition

Pvt., Co. B, 11 Reg't U. S. Col'd H. Art'y.

Appears on

Company Muster Roll

for July & Aug, 1865.

Present or absent Present

Stoppage, $ 100 for

Due Gov't, $ 100 for

Valuation of horse, $ 100

Valuation of horse equipments, $ 100

Remarks:

Book mark:

Hoyberger

(358) *Copyist.*

G. | 11 H. Art'y. | U.S.C.T.

John Garrison

Pvt., Co. B, 11 Reg't U. S. Col'd H. Art'y.

Appears on **Co. Muster-out Roll,** dated New Orleans La., Oct. 2, 1865.

Muster-out to date Oct. 2, 1865.

Last paid to Feb 28, 1865.

Clothing account:

Last settled ....., 186 ; drawn since $ 100

Due soldier $ ..... 100 ; due U. S. $ 5 95/100

Am't for cloth'g in kind or money adv'd $ 100

Due U. S. for arms, equipments, &c., $ X 6 04/100

Bounty paid $ None 100 ; due $ 100 00/100

Remarks: Joined org'l org'n

X Stop'd Musket and Acct's Ret'd eagle & 4 Numbers lost.

Book mark :

Hoyberger

(361) *Copyist.*

MICROCOPY

1818

ROLL

196

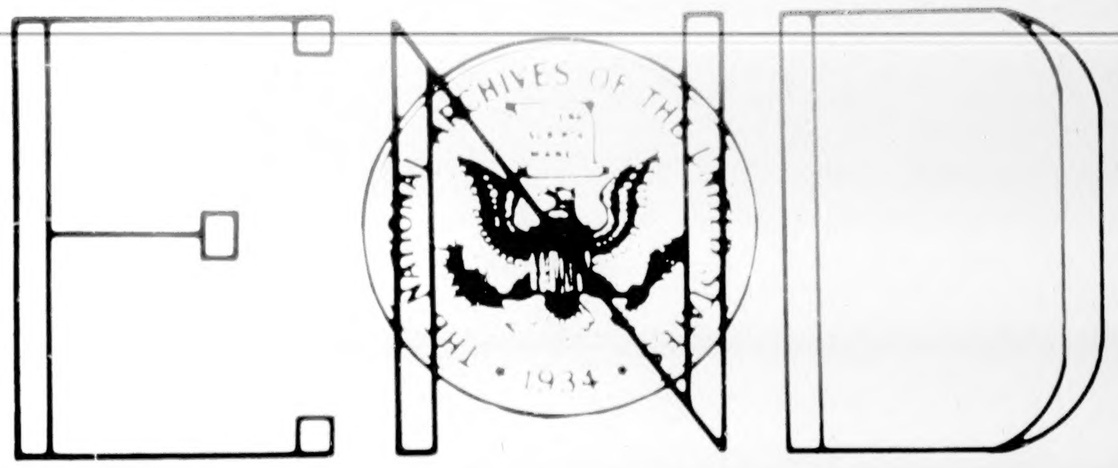

IMAGE EVALUATION
TEST TARGET (QA-3)

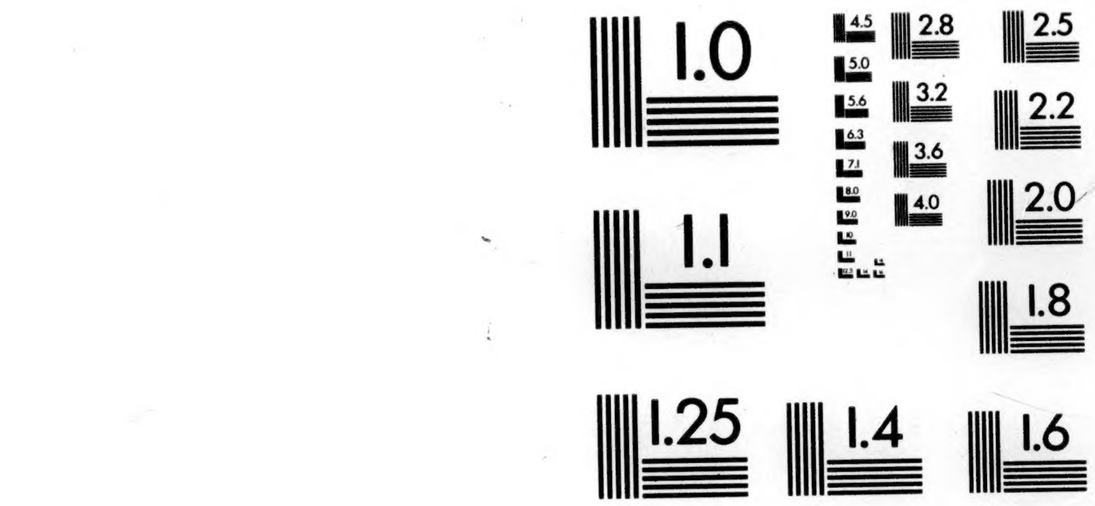

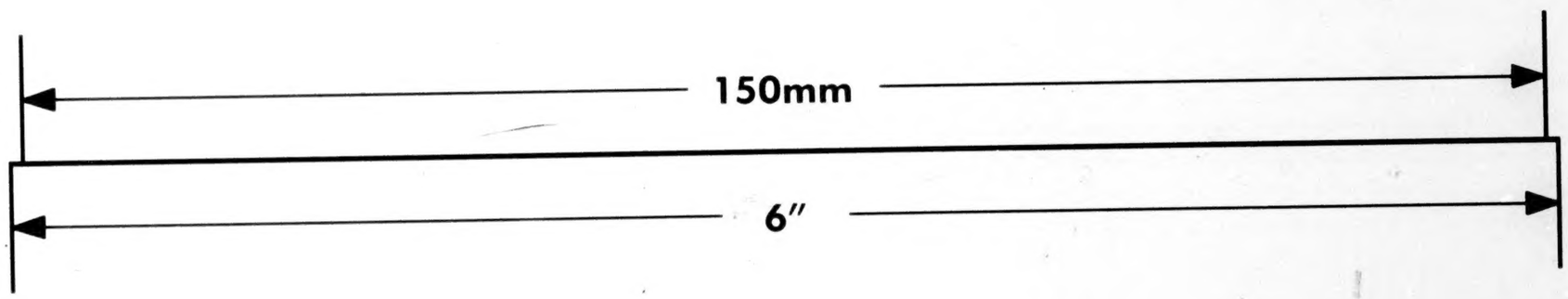

APPLIED IMAGE, Inc
1653 East Main Street
Rochester, NY 14609 USA
Phone: 716/482-0300
Fax: 716/288-5989

© 1993, Applied Image, Inc., All Rights Reserved

THE END

PLEASE

REWIND