NATIONAL ARCHIVES MICROFILM PUBLICATIONS

IMAGE EVALUATION
TEST TARGET (QA–3)

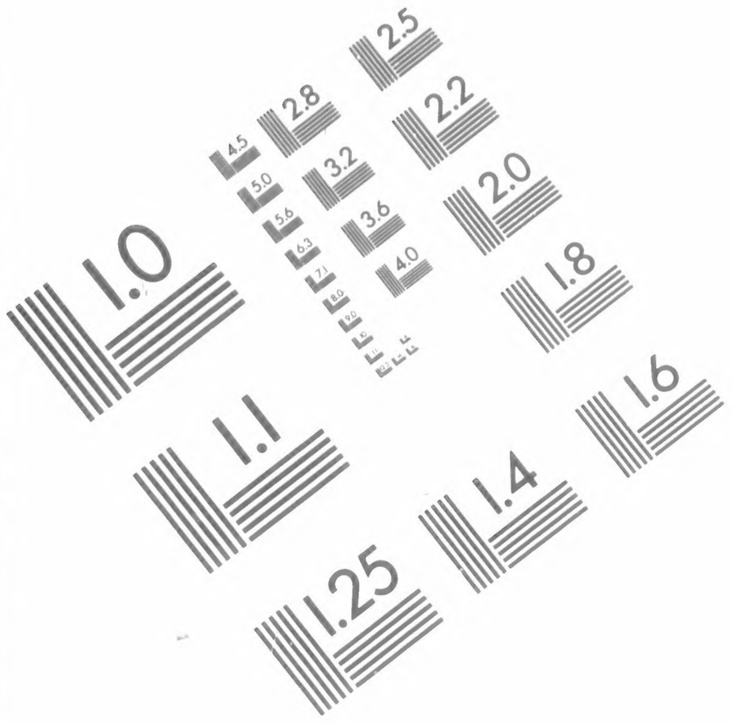

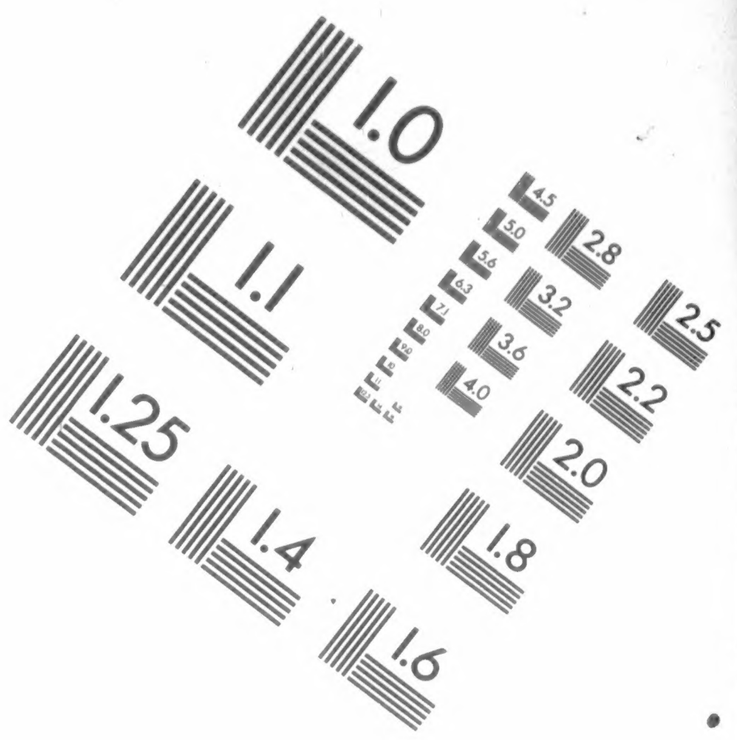

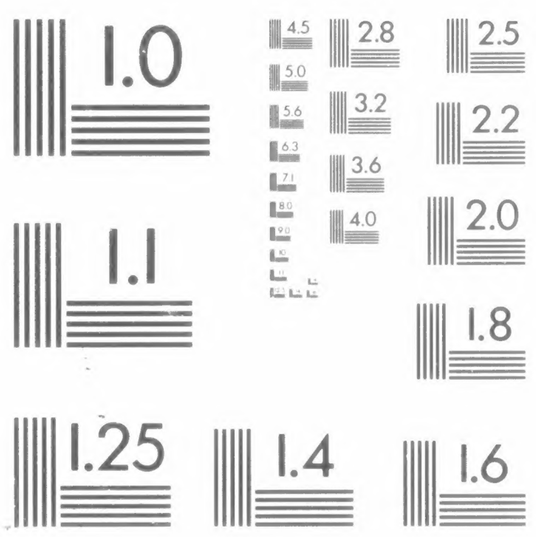

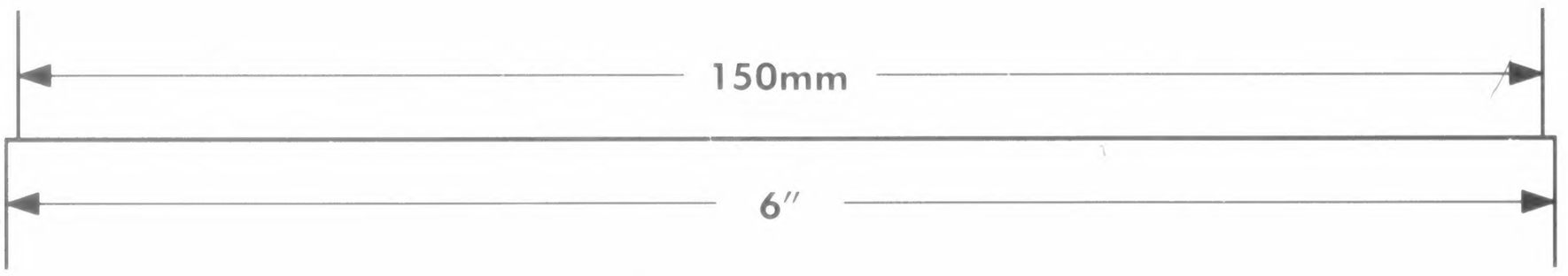

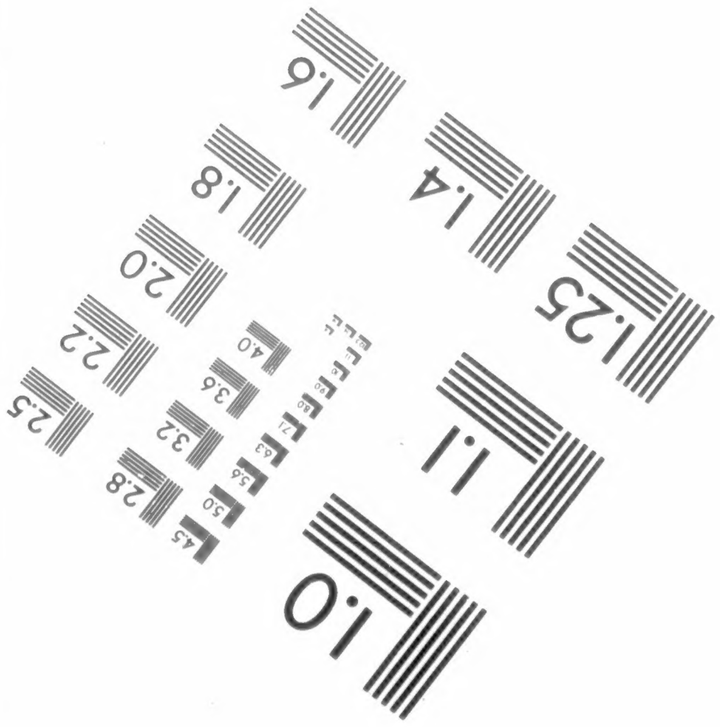

APPLIED IMAGE, Inc
1653 East Main Street
Rochester, NY 14609 USA
Phone: 716/482-0300
Fax: 716/288-5989

© 1993, Applied Image, Inc., All Rights Reserved

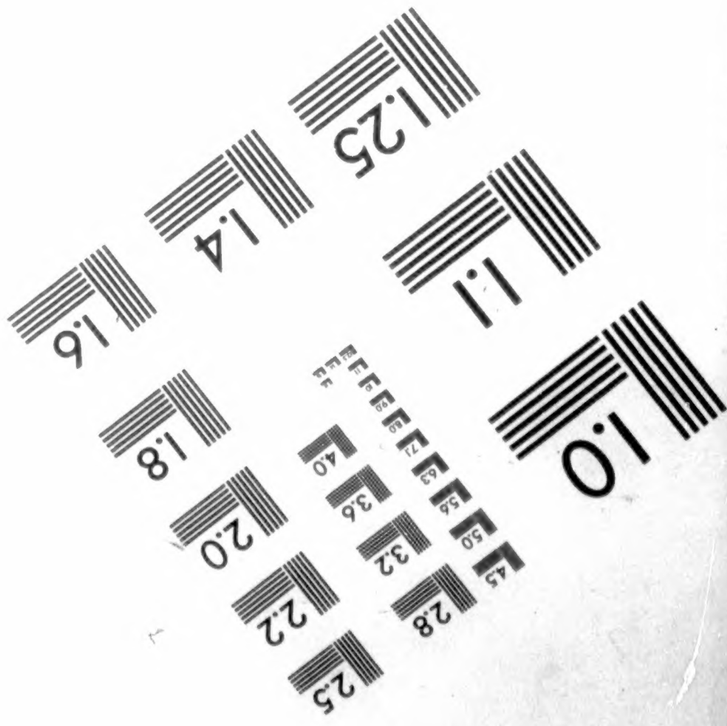

NATIONAL ARCHIVES MICROFILM PUBLICATIONS

IMAGE EVALUATION
TEST TARGET (QA-3)

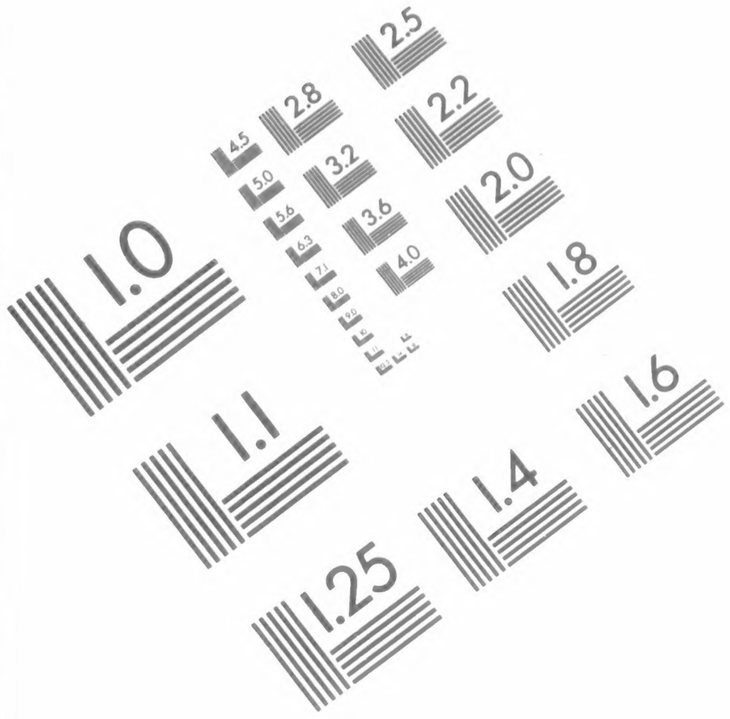

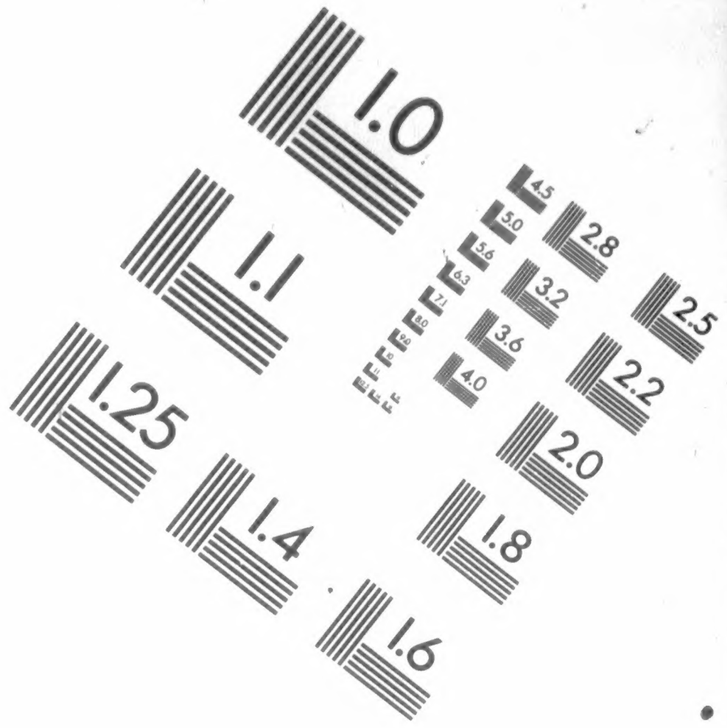

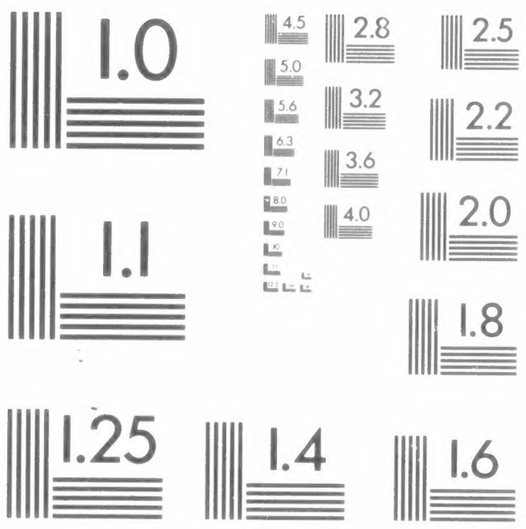

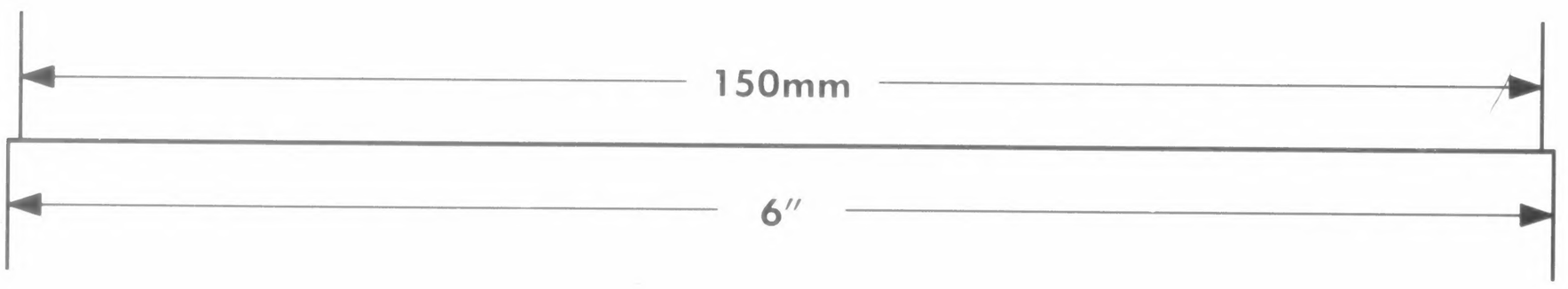

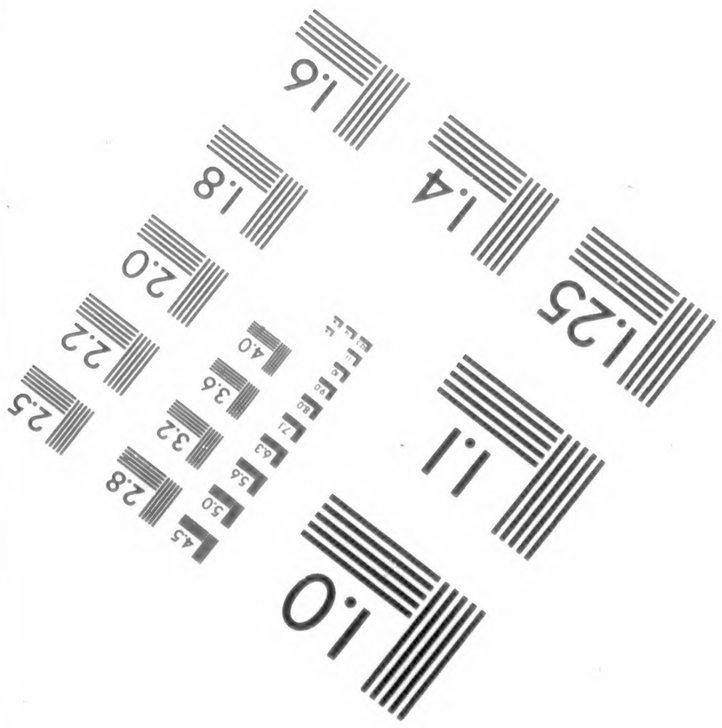

APPLIED IMAGE, Inc
1653 East Main Street
Rochester, NY 14609 USA
Phone: 716/482-0300
Fax: 716/288-5989

© 1993, Applied Image, Inc., All Rights Reserved

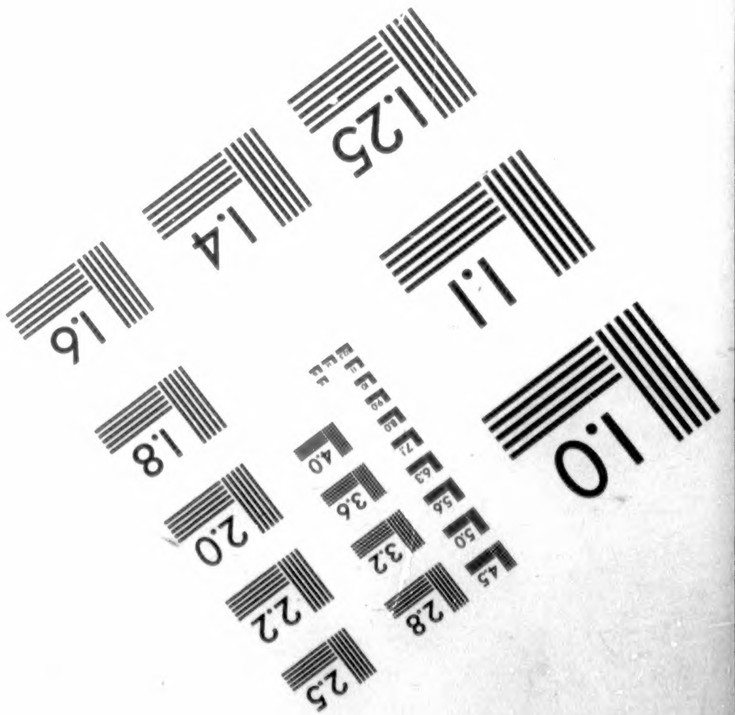

National Archives at College Park
8601 Adelphi Road College Park, Maryland 20740-6001

Sieh Loreta 2-1

OPERATOR CAMERA

14, Oct. 1998 10-14

DATE FILMED REDUCTION RATIO

2461 0576-014-02 Kodak

FILM EMULSION NUMBER

M1818 260

PROJECT NUMBER ROLL NUMBER

MICROCOPY

1818

ROLL

260

M1818

COMPILED MILITARY SERVICE RECORDS OF VOLUNTEER UNION SOLDIERS WHO SERVED WITH THE UNITED STATES COLORED TROOPS:
Artillery Organizations

Introduction by Budge Weidman, Project Manager

Records prepared for microfilming by members of
the Civil War Conservation Corps

Pat Alfredson
Phyllis Altrogge
Kenneth Ashton
Sue Barnard*
Dee Benson
Ann N. Brown
Robert Budway
Randy Caldwell
MaryAnn Castellana*
Mary Lou Cole
Giovanni Croce
B.H. Custer
Bob Denney
Richard Dow
Earl Dunn
Yvette Fallin
Maria Flesher
Naomi Glass
Sue Goward*
Bert Greenstein
Anne Greenwood
Jim Harris
Walter Hayden
Mary Hayden
Pat Ikonen
Dick Ives
Sarah Jaffe
Barbara Kemp
Bev Manypenny
Frank Masterson
Joe Mazur
Kathleen McCarthy
Sarah McDougall
Catherine McManus
Ben Miles
Dave Murray
Mary Poggioli
Peggy Pratt
Ray Puzio
Sylvia Scott
Lynn Shearouse
Mary Stack-Dunne
Ben Stearns
Bill Stormer*
Pat Sullivan
Gorman Tidball*
Cathy Tinston
John Toole
Maryellen Toole
Milt Weatherhead
Russ Weidman
C. Lois Young
Robert Young

Team leaders are indicated by the asterisk.

National Archives and Records Administration
Washington, DC
1998

INTRODUCTION

On the 299 rolls of this microfilm publication, M1818, are reproduced the compiled military service records of volunteer Union soldiers belonging to the artillery units organized for service with the United States Colored Troops (USCT). The USCT included 7 numbered cavalry regiments; 13 numbered artillery regiments plus one independent battery; 144 numbered infantry regiments; plus Brigade Bands Nos. 1 & 2 (Corps d'Afrique and US Colored Troops); Powell's Regiment Colored Infantry; Southard's Company Colored Infantry; Quartermaster Detachment; Pioneer Corps, 1st Division, 16th Army Corps; Unassigned Company A Colored Infantry; and Unassigned USCT. There are also miscellaneous service cards arranged alphabetically by surname at the end of the unit records. The records reproduced are part of the Records of the Adjutant General's Office, 1780's-1917, Record Group (RG) 94.

Background

United States Colored Troops

Since the time of the American Revolution, African Americans have volunteered to serve their country in time of war. The Civil War was no exception. Official sanction was the difficulty. In the fall of 1862 there were four Union regiments of African Americans raised in New Orleans, LA: the 1st, 2d, and 3d Louisiana Native Guard, and the 1st Louisiana Heavy Artillery (African Descent). The 1st South Carolina Infantry (African Descent) was not officially organized until January 1863; however, three companies of the regiment were on coastal expeditions as early as November 1862. Similarly, the 1st Kansas Colored Infantry was not mustered into Federal service until January 1863, even though the regiment had already participated in the action at Island Mound, MO, on October 27, 1862. These early unofficial regiments received little Federal support, but they showed the strength of the African American soldier's desire to fight for freedom.

The first official authorization to employ African Americans in Federal service was the Second Confiscation and Militia Act of July 17, 1862. This act allowed President Abraham Lincoln to receive into the military or naval service persons of African descent and gave him permission to use them for any purpose "he may judge best for the public welfare." However, the President did not authorize use of African Americans in combat until issuance of the Emancipation Proclamation on January 1, 1863.

In late January 1863, Governor John Andrew of Massachusetts received permission to raise a regiment of African American soldiers. The pace of organizing additional regiments was very slow. In March Secretary of War Edwin M. Stanton sent Gen. Lorenzo Thomas to the lower Mississippi Valley to recruit free and contraband African Americans. Thomas was given broad authority. He was to explain the administration's policy regarding African American soldiers and recruit

volunteers to raise and command them. Stanton wanted all officers of such units to be white, but that policy was softened to allow African American surgeons and chaplains. By the end of the war, in addition to the chaplains and surgeons, there were some 87 African American officers. Thomas's endeavor was very successful, and on May 22, 1863, the Bureau of Colored Troops was established to coordinate and organize regiments from all parts of the country. Created under War Department General Order No. 143, the bureau was responsible for handling "all matters relating to the organization of Colored Troops." The bureau was directly under the Adjutant General's Office and its procedures and rules were specific and strict. All African American regiments were now to be designated United States Colored Troops (USCT). At this time there were some African American regiments with state names and a few regiments in the Department of the Gulf designated as Corps d'Afrique. All these were ultimately assimilated into the USCT, even though some of the regiments, such as the 5th Massachusetts, retained their state designations.

To facilitate recruiting in the states of Maryland, Missouri, Tennessee, and eventually Kentucky, the War Department issued General Order No. 329 on October 3, 1863. Section 6 of the order stated that if any citizen should offer his or her slave for enlistment into the military service, that person would, "if such slave be accepted, receive from the recruiting officer a certificate thereof, and become entitled to compensation for the service or labor of said slave, not exceeding the sum of three hundred dollars, upon filing a valid deed of manumission and of release, and making satisfactory proof of title." For this reason, some records of manumission are contained in the compiled service records reproduced in this publication.

The USCT fought in 39 major engagements and over 400 lesser ones. Sixteen African American soldiers received Medals of Honor. As it was in other units, the death toll from disease was very high in the USCT. Deaths from disease and battle totaled 37,000. The last regiment of the USCT was mustered out of Federal service in December 1867.

Important sources for information about African American units in the Civil War are the War Department's *The War of the Rebellion: A Compilation of the Official Records of the Union and Confederate Armies* (Washington, DC: 1880–1901; reprinted Harrisburg, 1971 and 1985) and the Navy Department's *The War of the Rebellion; A Compilation of the Official Records of the Union and Confederate Navies* (Washington, DC: 1874–1922; reprinted Harrisburg, 1971 and 1985). These multivolume works contain reports of operations and other official correspondence.

U. S. Colored Heavy Artillery

1st Heavy Artillery: This regiment was organized at Knoxville, TN, between February and November 1864. It served in Knoxville, eastern Tennessee, western Virginia, northern Alabama, and western North Carolina. It was mustered out on March 31, 1866.

2d Heavy Artillery: This regiment was changed from the 2d Heavy Artillery to the 3d Heavy Artillery on April 26, 1864, and the compiled military service records appear there.

3d Heavy Artillery: Organized as the 1st Tennessee Heavy Artillery (African descent) at Memphis and Fort Pickering, TN, from June 5 to December 22, 1863, this regiment's designation was changed to the 3d United States Colored Heavy Artillery in April 1864. It served garrison duty at Fort Pickering and in defense of Memphis, TN. The unit mustered out on April 30, 1866.

4th Heavy Artillery: This unit was organized as the 2d Regiment Tennessee Heavy Artillery (African descent) from June 1863 until April 1864. It became the 4th United States Colored Heavy Artillery in April 1864. It served at Fort Halleck; Columbus, KY; and Union City, TN. The regiment had duty near Fort Donelson, TN, and moved to Pine Bluff, AR, where it was mustered out on February 25, 1866.

5th Heavy Artillery: This regiment was organized at Vicksburg, MS, between August 1863 and January 1864, as the 9th Louisiana Volunteers (African descent). Its designation was changed to the 5th Heavy Artillery in April 1864. The unit served garrison duty at Vicksburg, MS, and was mustered out on May 20, 1866.

6th Heavy Artillery: This regiment was organized as the 2d Mississippi Heavy Artillery (African descent) at Natchez, MS, from September 1863 to January 1864. It was changed to the 6th United States Colored Heavy Artillery on April 26, 1864. The unit served at Natchez, Mississippi, and Vidalia, LA. It was mustered out on May 18, 1866.

7th Heavy Artillery: The 7th Heavy Artillery was designated the 11th United States Colored Infantry (New) on January 23, 1865, and the compiled military service records appear there.

8th Heavy Artillery: This regiment was organized at Paducah, KY, from April to October 1864. It served garrison duty at Paducah and was mustered out on February 10, 1866.

9th Heavy Artillery: This regiment consisted of four companies and was organized at Clarksville and Nashville, TN, during October 1864. It was mustered out on May 5, 1865.

10th Heavy Artillery: Organization of this regiment at New Orleans, LA, began in November 1862. First designated the 1st Louisiana Heavy Artillery (African descent) in November 1863, it became the 1st Regiment Corps d'Afrique. In May 1864 the unit became the 10th United States Colored Heavy Artillery. The regiment was on garrison duty at New Orleans during its entire service. It served longer than any other USCT regiment, mustering out on February 22, 1867.

11th Heavy Artillery: This regiment was organized at Providence, RI, from August 1863 through January 1864, as the 14th Rhode Island Colored Heavy Artillery. In May 1864 it became the 11th United States Colored Heavy Artillery. The unit served garrison duty at New Orleans, LA, and was mustered out on October 2, 1865.

12th Heavy Artillery: This regiment was organized at Camp Nelson, KY, from July 1864 through July 1865. It served garrison duty at Camp Nelson, Bowling Green, and other points in the District of Kentucky. It was mustered out on April 24, 1866.

13th Heavy Artillery: This regiment was organized at Camp Nelson, KY, in June 1865, where it served garrison duty. It also served at Smithland and Lexington, KY. It was mustered out on November 18, 1865.

14th Heavy Artillery: This regiment was organized at New Bern and Morehead City, NC, from March 1864 to April 1865, as the 1st North Carolina Colored Heavy Artillery. It became the 14th United States Colored Heavy Artillery in March 1865. The unit served garrison duty at New Bern, NC, and was mustered out on December 11, 1865.

U. S. Colored Light Artillery

The **1st Regiment Light Artillery** was recruited and organized under Maj. Gen. Benjamin F. Butler in December 1863. In February 1864 it was changed to Battery B of the 2d Light Artillery.

The **2d Regiment Light Artillery** consisted of nine batteries, A through I, that were independently organized and deployed.

Battery A was organized at Nashville, TN, in April 1864. The battery served garrison duty at Nashville and participated in the Battle of Nashville December 15–16, 1864. It was mustered out January 13, 1866.

Battery B was organized at Fort Monroe, VA, in January and February 1864. It operated in Virginia and participated in the siege against Petersburg and Richmond. The battery was ordered to Texas in May 1865, and mustered out March 17, 1866.

Battery C was organized at Hebron's Plantation, MS, in November 1863, as the 1st Battery Louisiana Light Artillery (African descent). It was designated Battery C in April 1864. The battery had garrison duty at Goodrich Landing, Vicksburg, and Milliken's Bend. It was mustered out December 28, 1865.

Battery D was organized at Black River Bridge, MS, in December 1863, as the 2d Battery Louisiana Light Artillery (African descent). It was designated Battery D in April 1864. The battery had garrison duty at Goodrich Landing and Vicksburg, MS, and was mustered out on December 28, 1865.

Battery E was organized at Helena, AR, in December 1863, as the 3d Battery Louisiana Light Artillery (African descent). It was designated Battery E in April 1864. The battery had garrison duty at Helena, AR, and was mustered out on September 26, 1865.

Battery F was organized at Memphis, TN, in November 1863, as the Memphis Light Battery. It was designated Battery F in April 1864. The battery had garrison duty at Memphis, TN, until April 1865, when it moved to Bridgeport, AL. It was mustered out on December 28, 1865.

Battery G was organized at Hilton Head, SC, in May 1864 and had garrison duty at Hilton Head for its entire term. The battery was mustered out on August 12, 1865.

Battery H was organized at Pine Bluff, AR, in June 1864, as the 1st Arkansas Colored Battery. It was designated as Battery H in December 1864. The battery had garrison duty at Pine Bluff the entire term and was mustered out on September 14, 1865.

Battery I was organized at Memphis, TN, in April 1864. The battery had garrison duty at Memphis, TN, and operations in Mississippi. It was mustered out on January 10, 1866.

Independent Battery was organized at Leavenworth, KS, in December 1864. It had duty at Fort Leavenworth until it was mustered out on July 22, 1865.

Records Description

Compiled service records consist of a jacket-envelope for each soldier, labeled with his name, rank, unit, and card numbers. The compilation of service records of Union soldiers began in 1890 under the direction of Col. Fred C. Ainsworth, head of the Record and Pension Office of the Adjutant General's Office, Department of War. Information from muster rolls, regimental returns, descriptive books, and other records was copied verbatim onto cards. A separate card was prepared each time an individual name appeared on a document. These cards were numbered on the back, and these numbers were entered onto the outside jacket containing the cards. The carded information was verified by a separated operation of comparison; great care was taken to ensure that the cards were accurate.

A typical jacket contains card abstracts of entries found in original records relating to the soldier and original documents relating solely to that soldier. Examples of the latter include enlistment papers, substitute certificates, casualty sheets, death reports, prisoner-of-war memorandums, and correspondence. Unique to the records of the USCT are deeds of manumission, oaths of allegiance, proof of ownership, certificates of monetary award, and bills of sale. These items appear most frequently in units recruited in the border states of Kentucky, Missouri, and Maryland. These states remained in the Union but were slave states. Jackets and

cards include a section labeled "bookmark" which was reserved for cross-references to other records relating to the individual or his unit. The service records are arranged by arm of service, thereunder numerically by regiment or independent battalion or company, and thereunder alphabetically by name of the soldier. Records for officers are interfiled alphabetically by name with the records of enlisted men. If an individual served in more than one unit, which was typical for USCT officers, there will be a separate service record for each unit in which he served.

The unjacketed miscellaneous cards were accumulated by the War Department with the expectation that they would be incorporated in individual compiled service records. However, the expectation was never fulfilled, because either insufficient or contradictory information made it impossible to associate the cards or papers with a particular soldier's service records.

Related Records

Among the records of the Adjutant General's Office in the National Archives are many of the original records that were abstracted or "carded" by the Record and Pension Office. These include the individual unit's muster rolls, returns and descriptive books. Other series in RG 94 that contain information relating to volunteer Union soldiers who served with the USCT include carded records relating to Union staff officers, carded medical records of volunteer Union soldiers, unbound and bound regimental records and "record of events" cards. The regimental records of the 54th Massachusetts Infantry (Colored) have been reproduced as Microfilm Publication M1659, *Records of the Fifty-fourth Massachusetts Infantry Regiment (Colored), 1863-1865*.

The "record of events" cards include information copied from the unit's muster rolls and returns. They show the stations of the field and staff and those of the various companies of the regiment at the time the muster roll or return was prepared and sometimes mention battles, skirmishes, or other activities in which the regiment participated. The cards have been reproduced as Microfilm Publication M594, *Compiled Records Showing Service of Military Units in Volunteer Union Organizations*.

Record Group 94 also includes a card index for the USCT, reproduced as Microfilm Publication M589, *Index to Compiled Military Service Records of Volunteer Union Soldiers Who Served with U.S. Colored Troops*, which may be used to locate the regiment of USCT personnel. An index card gives the name of the soldier and his rank, as well as the unit in which he served; sometimes there is a cross-reference to his service in other units or organizations. The National Archives is continually producing microfilm publications of volunteer Union compiled military service records. A complete listing of finished publications can be found in the National Archives *Microfilm Resources for Research: A Comprehensive Catalog* which is available online at http://www.nara.gov.

The Records of the Colored Troops Division, within RG 94, include division correspondence and records relating to recruiting, the appointment of officers, and the slave or free status of individuals; and a compilation of historical extracts and official papers concerning the military service of African Americans from the colonial period through the Civil War entitled *The Negro in the Military Service of the United States 1639-1886.* This compilation is reproduced as Microfilm Publication M858. The Records of the Bounty and Claims Division, also in RG 94, include correspondence of the division and records relating to bounties and claims paid to loyal owners of slaves by the Slave Claims Commissions of Delaware, Kentucky, Maryland, Missouri, Tennessee, and West Virginia.

If an application for a pension was made, the pension application case file may be among the Records of the Veterans Administration (RG 15). Indexes to the pension applications have been reproduced as Microfilm Publication T288, *General Index to Pension Files, 1861-1934,* and T289, *Organizational Index to Pension Files of Veterans Who Served Between 1861 and 1900.*

If a soldier or officer was tried before a general court-martial or if an individual or his unit was the subject of a court of inquiry or military commission, transcripts of the proceedings may be among the Records of the Office of the Judge Advocate General (Army) (RG 153). The registers to the proceedings have been reproduced as Microfilm Publication M1105, *Registers of the Records of the Proceedings of the U.S. Army General Courts-Martial, 1809-1890.*

Other record groups having information pertaining to the USCT include Records of the Bureau of Refugees, Freedmen, and Abandoned Lands (RG 105); Records of the Provost Marshal General's Bureau (Civil War) (RG 110); Records of the Accounting Officers of the Department of the Treasury (RG 217); and Records of U.S. Army Continental Commands, 1821-1920 (RG 393).

Roll list

Roll	Description
	1st United States Colored Heavy Artillery
1	Ackerson, David – Baker, Barney
2	Baker, George – Bogle, Harry
3	Bolden, Joseph – Brown, Edwin G.
4	Brown, George – Carmack, Bachus
5	Carmack, Gilbert – Cleveland, Loudon
6	Clevenger, Charles – Cune, John C.
7	Curd, George – Eblin, Richard
8	Eckles, Silas – Furbush, Lewis
9	Gaines, George – Greenleaf, Andrew
10	Greenleaf, Julius – Hart, Benjamin
11	Hartman, Henry – Hoff, David
12	Holland, John – Jackson, Thomas J.
13	Jackson, Washington – Jones, James
14	Jones, John – Ledgewood, Clayborne
15	Lee, Elhanon – Martin, Robert
16	Mason, Henry – McKenney, Elijah
17	McKinney, Lewis – Montcastle, Stewart
18	Montgomery, Alfred – Owens, Benjamin
19	Owens, Granville – Ragan, Nelson
20	Ragan, Rome – Russell, Orlando A.
21	Russell, Perry – Smith, Archie
22	Smith, Bart – Suddles, Robert
23	Summers, Joseph D. – Turner, Charles
24	Turner, Henry – Weir, Richard
25	Weir, Robert – Willis, Albert
26	Willis, Beverly S. – Zimmerman, William
	3d United States Colored Heavy Artillery
27	Abel, William – Armour, Lewis
28	Armstaed, William – Beaufort, Thomas
29	Beaumont, Henry – Bowler, Lafayette P.
30	Bowman, Fleming – Brummer, John E.
31	Bryan, Solon – Carter, William
32	Cartman, John – Cook, Isham
33	Cook, John – Davis, Doctor
34	Davis, George – Easen, Samuel
35	Easley, Wesley – Flinn, Clay
36	Flint, James – Gilbreth, Eli

Roll	Description
37	Gilbreth, Guy - Griffin, Samuel
38	Griffin, William - Harrison, James
39	Harrison, James C. - Hicks, Smith
40	Higginbottom, Nimrod - Hunt, Rubin
41	Hunt, William - Johnson, Charles
42	Johnson, Crawford - Jones, Isaac
43	Jones, Isam - Knight, Warren
44	Knox, Overton - Mabin, Baker
45	Mabin, James - McDonald, Manuel
46	McDonald, Ruben - Mills, Robert
47	Milroy, John - Nealy, Henry
48	Ned, Lewis - Patterson, Pembroke J. (Perin J.)
49	Patton, Richmond - Powers, William
50	Prewitt, Greene - Roberts, Lewis
51	Robinette, Henry - Scott, Edmond
52	Scott, Elijah - Smith, Peter
53	Smith, Randall - Tapscott, Julius
54	Tarwater, Jesse - Todd, William
55	Todd, Willis - Wallace, Robert
56	Wallace, Sandford - Wells, Duncan
57	Wells, Joseph - Williams, Guyo
58	Williams, George - Wolbrecht, Adolf
59	Wood, Charles - Young, William H.

4th United States Colored Heavy Artillery

60	Abbott, John - Barnes, Samuel
61	Barnes, Thomas - Britt, Jackson
62	Britten, Charles - Clark, Mitchell
63	Clay, Henry - Daniel, Richard
64	Daniels, William - Dyson, Jack
65	Dyson, Paul - Gardner, Riley
66	Gardner, Washington - Hall, Henry
67	Hall, Jack - Horton, Mack
68	Horton, William - Jones, Levi
69	Jones, Louis - Lewis, Stephen
70	Lewis, Thomas - McMurray, Anderson (John)
71	McMurray, George - Need, Benjamin
72	Nelson, John - Prior, Alfred
73	Prior, Gabriel - Rutland, Isaac
74	Ruttkay, Albert - Smith, Louis
75	Smith, Samuel - Turner, Frank
76	Turner, James - White, Henry
77	White, Raven - Youngs, William

Roll	Description
	5th United States Colored Heavy Artillery
78	Abbott, Richard – Armstrong, William
79	Arrindale, John B. – Bentley, Francis A.
80	Bentley, Isam – Brooks, Lawyer
81	Brooks, Robert – Cabin, Henry
82	Cabin, Shadrick – Coleman, Nathan
83	Coleman, William – Davidson, Ellis
84	Davis, Alfred – Dodd, Taylor
85	Dodds, Peter – Feltis, Jackson
86	Felton, Martin – Gilford, Charles
87	Gillespie, Gilbert – Hagan, Alex
88	Hagans, Joseph – Hayes, John S.
89	Haythorn, Henry – Hood, John
90	Hooker, William – James, Warren
91	January, Nathan – Johnson, Wiley
92	Johnson, William – Kindley, Edward
93	King, Elijah – Lewis, Ely J.
94	Lewis, George W. – Manitoe, Samuel
95	Manly, Elisha – McNeil, William
96	McQuilley, Clayton – Mosley, Jacob
97	Moss, Alfred – Parker, James
98	Parker, John H. – Powell, Monroe
99	Power, Henry – Roach, Watt
100	Robb, Benjamin – Shaw, Barrow
101	Shaw, James – Smith, Robert
102	Smith, Samuel – Tate, John
103	Taylor, Anderson – Trueman, Henry
104	Truman, Nelson – Ward, George
105	Ward, Jacob – West, Moses
106	Westbrook, Ellick – Williams, John B.
107	Williams, Jordan – Wood, Theodore
108	Woodam, Henry – Young, William
	Miscellaneous Service Cards
	Allen, Geo. – Young, L.
	6th United States Colored Heavy Artillery
109	Aaron, William – Barton, Granderson
110	Baseman, Jerry – Bracton, John
111	Bradford, Henry – Bush, Wilson
112	Bustis, Mondey – Clay, Henry
113	Clay, William – Davenport, William
114	Davenport, Wilson – Dunbar, Newton

Roll	Description
115	Dunbow, Hannibal – Fox, William
116	Francis, James – Green, George
117	Green, James – Harris, Hiram
118	Harris, John – Hopper, Anthony
119	Hopper, Handy – James, Joseph
120	Jasper, Samuel – Jones, John
121	Jones, Jonas – Leavitt, Charles B.
122	Lee, David – McBride, Samuel
123	McCabe, Alexander H. – Moore, Joseph
124	Moore, Manual – Owens, Willis
125	Page, Benjamin – Reece, Edward
126	Reese, William – Samuel, William
127	Sanders, Archibald – Smart, Robert
128	Smith, Aaron – Suzette, Armstead
129	Swanson, Jack – Trotter, George
130	Troyman, George – Waters, Robert
131	Waters, Wesley – Williams, Bedney
132	Williams, Benjamin – Wilson, George
133	Wilson, Guy – Young, Wesley Miscellaneous Service Cards Adams, Winder – Williams, John

8th United States Colored Heavy Artillery

134	Abanather, Paten – Beasley, George W.
135	Beasley, Washington – Boyd, Isaac
136	Boyd, Paine – Burrill, George
137	Burris, Abram – Cofield, Henry
138	Cofield, Isaac – Davis, George
139	Davis, Jerry – Edwards, Frank
140	Edwards, Gus – Ginigan, Thomas
141	Givens, George – Hampton, Phillip
142	Hancock, James – Hodge, Cotney
143	Hodge, Gaines – Johnson, Charles
144	Johnson, Clinton – Lee, Wash
145	Leeper, Thomas – Maxwell, Henry
146	Maxwell, Samuel – Moore, Amos
147	Moore, David – Pearson, Alexander
148	Pearson, Charley – Rice, Pleasant
149	Rice, Taylor – Sherrer, Elick
150	Shirles, James – Talbot, Henry
151	Talley, William – Turner, Robert
152	Tyler, Jerry – Williams, John
153	Williams, Sam – Young, William

Roll	Description
	9th United States Colored Heavy Artillery
154	Ailer, John – Coleman, Miles
155	Collins, Moses A. – Grosskopff, Edward
156	Grubb, Andrew – Landon, Harry
157	Lanier, Jesse – Payne, George
158	Payne, James – Tory, Madison
159	Toryand, Emanuel – Young, George
	10th United States Colored Heavy Artillery
160	Aaron, Benjamin – Auguste, Daniel
161	Augustus, Edward – Benson, George
162	Bentley, William H. – Brooks, Walker
163	Brooks, Washington – Camel, Paul
164	Cameron, Henry – Coleman, James
165	Coleman, John – Deale, Joseph
166	Deale, Thomas – Ellis, Robert
167	Ellis, Silas – Frederick, Joseph
168	Freeland, Martin A. – Grandison, Alfred
169	Grant, Moses – Harrison, Logan
170	Harrison, Thomas – Hoyt, Joseph
171	Hubbard, Henry – Jenkins, Solomon
172	Jennings, Caleb – Jozen, Jules
173	Julia, Nora – Libscomb, George
174	Lightfoot, Columbus – Maryday, John
175	Masdael, Noel – Misker, Robert
176	Mitchel, Alexander – Oldham, George B.
177	Oliver, Emile – Purnell, John
178	Putnam, Winthrop D. – Robinson, Henry
179	Robinson, Isaac – Simmons, Owen
180	Simms, Amos – Spencer, John
181	Spriggs, Thomas – Thornton, John
182	Thurston, Charles – Warner, Dudley
183	Warner, George E. – Wesley, John
184	West, Alexander – Willis, Stephen
185	Willson, George – Zozey, Jules Miscellaneous Service Cards Cann, Mercer – Grayson, John W.
186	Miscellaneous Service Cards Green, Andrew P. – Rygaard, Soren
187	Miscellaneous Service Cards Sabatier, Peter – Zevenette, Paul

Roll	Description
	11th United States Colored Heavy Artillery
188	Abbott, George M. – Bailey, James A.
189	Baird, Sylvester – Boardley, James
190	Boardley, John W. – Brown, Nathan
191	Brown, Samuel – Carter, William H.
192	Cartright, George W. – Commings, Hugh S.
193	Comstock, Joseph J. – Davis, Lyman
194	Davis, Stephen – Dubois, James
195	Duesenbury, Lewis – Fletcher, Roderick S.
196	Fletcher, Samuel – Garrison, John
197	Gaskell, George L. – Groff, Joseph
198	Guard, Andrew – Hector, William H.
199	Heelms, Harkness – Howard, Richard
200	Howard, Thomas – Jackson, Lewis
201	Jackson, Norton – Johnson, Joseph W.
202	Johnson, Nathan – King, Cornelius
203	King, George – Loucks, John A.
204	Low, Charles H. – Miller, Benjamin
205	Miller, Floyd N. – Nicholas, Samuel
206	Nichols, Alfred – Pierce, George W.
207	Pierce, John B. – Reed, Washington
208	Reese, Edward – Sampson, William H.
209	Sanders, Edward – Skanks, James S.
210	Skanks, Thomas C. – Sommerset, Levi
211	Southwick, Henry K. – Taylor, Alfred M.
212	Taylor, Charles – Townsend, John
213	Tracy, John – Warren, John
214	Washington, George – Whiting, Joseph C., Jr.
215	Wigden, Cyrus B. – Wilson, Samuel
216	Wilson, William – Young, Francis Miscellaneous Service Cards Abbot, George W. – Dyer, William S.
217	Miscellaneous Service Cards Earl, Peter – Young, William H.
	12th United States Colored Heavy Artillery
218	Abbott, John – Barbee, Squire
219	Barber, Sherwood – Boller, Jerry
220	Bolor, Collins – Bryant, Frederick
221	Bryant, Henry – Bush, Reason
222	Butler, Aaron – Clark, Richard
223	Clark, Samuel – Criffield, Lewis

Roll	Description
224	Christopher, James - Dock, Calvin E.
225	Dodge, Henry - Farnesley, Jack
226	Farrus, Ephraim - Gaves, David
227	Gentry, George - Haggin, George
228	Haggin, Samuel - Hawkins, Robert
229	Hawkins, Thomas - Hode, Adam
230	Hodge, Charles - Jackson, Andrew
231	Jackson, Augustus - Jopee, Joseph
232	Juda, Enoch - Lewis, Windsor
233	Lidick, Randall - Maton, Levi
234	Matthews, Charles W. - Mitchell, John
235	Mitchell, Monroe - Nelson, Joseph
236	Nesbin, William - Porter, Daniel
237	Porter, William R. - Richason, Shelly
238	Richie, George - Scott, Smith
239	Scott, Stephen - Smith, Leroy
240	Smith, Lyman - Taylor, Charles
241	Taylor, Cornelius - Turner, David
242	Turner, George - Warren, James
243	Washington, Anthony - Williams, Berry
244	Williams, Charles - Woodson, David
245	Woodson, Egbert - Young, Thomas Miscellaneous Service Cards Baughman, John - Heel, Rubin
246	Miscellaneous Service Cards Helm, Harry - Young, Stephen

13th United States Colored Heavy Artillery

247	Abbott, Josiah - Bell, Augustine
248	Bell, Charles - Brown, Jesse
249	Brown, Lindsay - Connor, Cyrus
250	Connor, Isaac - Dyre, George
251	Early, Edward - Ginn, Samuel
252	Ginnis, Sidney Clay - Heath, Henry
253	Heath, Lewis - Jarrett, Charles
254	Jay, Johnson - Lee, William
255	Lender, Richard - McKinney, Cass
256	McKinney, Henry Clay - Owens, Robert
257	Owens, Smith - Randolph, Loyd
258	Rankins, Archibald - Scott, Jerry
259	Scott, John - Sugg, Edmond
260	Suiter, Jacob A. - Waddie, Harry
261	Waddy, Peter - Willett, Price

Roll	Description
262	Willett, Robert – Young, William
263	Miscellaneous Service Cards Abbott, Josiah – Yumber, Anthony

14th United States Colored Heavy Artillery

264	Acot, Isaac – Becton, Henry
265	Becton, Moses – Burke, George W.
266	Burke, William A. – Davis, Toney
267	Dean, Thomas – Fullford, William
268	Fulton, James – Hardy, William
269	Harget, Israel – Hovey, William
270	Howard, Calvin – Kensley, Silas
271	Kent, Henry – McKeever, Simon
272	McMichael, Joseph – Noble, William
273	Nobles, Charles – Randall, Evans
274	Randall, Willey – Shark, Bryant
275	Sheckelford, Daniel – Smith, Samuel
276	Smith, Sterling – Thompson, John Henry
277	Thompson, Mark – Weeks, Ezekiel
278	Weidman, Albert – Wilson, Payton
279	Wilson, Richard – Young, William Miscellaneous Service Cards Acott, Isaac – Young, William

2d Regiment United States Colored Light Artillery

280	Able, John – Bernard, Albert
281	Berry, Henry – Brown, Sang
282	Brown, Thomas – Clark, William
283	Clay, Henry – Disen, Henry
284	Disen, Watkins – Francis, Henry
285	Franklin, Albert – Haines, Roe
286	Haines, Thomas – Hunt, Thomas
287	Hunter, Alexander M. – Kennedy, Abram
288	Kennel, George – March, George
289	Marcy, Anthony – Mobbs, Daniel
290	Moffet, John – Pattiller, Alfred
291	Pattiller, Patrick – Richardson, Jacob
292	Ridgeway, Anthony – Smith, Louis B.
293	Smith, Minus – Tucker, Alfred

Roll	Description
294	Tucker, Sandy - Williams, Calvin
295	Williams, Charles - Zinum, John
296	Miscellaneous Service Cards Abraham, Francis - Young, Ruben

Independent Battery, United States Colored Light Artillery

297	Alexander, John - Hancock, George W.
298	Hanson, Noah C. - Scott, Andrew
299	Scott, Reynolds - Yeager, John Miscellaneous Service Cards Douglass, H. Ford - Minor, P.M.

NATIONAL ARCHIVES MICROFILM PUBLICATIONS

Microfilm Publication M1818

COMPILED MILITARY SERVICE RECORDS OF VOLUNTEER UNION SOLDIERS WHO SERVED WITH THE UNITED STATES COLORED TROOPS: Artillery Organizations

Roll 260

13th United States Colored Heavy Artillery

Suiter, Jacob A. – Waddie, Harry

NATIONAL ARCHIVES AND RECORDS ADMINISTRATION

Suiter. Jacob a 1988

Co H, 13 U.S.Col'd H. Art'y.

Captain	Captain

CARD NUMBERS.

1	55-5-1-55-36	26	
2	55-5-1-9-7-0-7	27	
3	55-5-1-9-8-5-6	28	
4	55-5-1-9-9-9-5	29	
5	55-5-2-0-1-2-1	30	
6	55-5-2-0-2-9-7	31	
7	55-5-2-0-4-4-9	32	
8	94-37-23-4	33	
9	D-821-CJ-1864	34	
10	4C75-15-39	35	
11	42775-8C8	36	
12	42775-821	37	
13	42775-85-3	38	
14	42775-868	39	
15	42-775-92-C	40	
16	42775-989	41	
17	427760-67	42	
18	426C8103	43	
19		44	
20		45	
21		46	
22		47	
23		48	
24		49	
25		50	

Book Mark: D. 821, C.J. 1864

See also 1" Ohio H.A.

D. 2260709 $4.50

A.S.M. 43120 C

S S [illegible] 1846

S A Muhleman
24,

81 | 13 H. Art | **U.S.C.T.**

Jacob A. Suiter

Capt, Co. A, 13 Reg't U. S. Col'd H. Art'y

Appears on

Regimental Descriptive Book

(List of Commissioned Officers)

of the regiment named above.

Rank Capt'n

Date of appointment July 23 1864.

Remarks:

G. W. Chase

Copyist.

L. 13. U. S. C. H. A. | **U.S.C.T.**

Lieut. A. Suiter

Capt. Co. ~~*F*~~ *A*, *13* Reg't U. S. Col'd *C. H. A.*

Age *26* years.

Appears on an

Individual Muster-in Roll

of the organization named above. Roll dated *Paducah. Ky.*, *Nov. 23*, 186*4*.

Muster-in to date *Nov. 23*, 186*4*.

Joined for duty and enrolled:

When *Nov. 23.*, 186*4*.

Where *Paducah. Ky.*

Period *3* years.

Valuation of horse, $ 100

Valuation of horse equipments, $ 100

Remarks: *Appointed Capt of 13. U. S. C. H. A. to rank as such. from July. 23/64 This Muster to take effect Nov. 23-1864. By order (over)*

Book mark: *The muster in of this officer is annulled to date (over)*

Corrected by W.D. May 18, 1903.

Magee

(336) Copyist.

JAN. 13 5515536 1891

Received from Secty
War. dated Aug. 1-1864

Book mark. Cont.
Oct 1/64. Hee is mustered
for pay, from that date to. Nov. 22
/64. With dates inclusive Any
pay he may have Rec'd as an en-
listed man of Co. F. / Ohio Heavy
Artly. for services rendered during
the period for which he is now
mustered will be deducted from
the Amt otherwise due. by
virtue of this amended muster
See. S.O. 323-A.G.O. Dec 30-1863

S | 13 N. Wtg | U.S. C.T

Jacob A Suiter

Capt. Co. F 13 Regt. U.S. Co. N.A.

Return

of the Post of Smithland, Ky.,

for the month of Nov, 1864,

dated Dec 1, 1864,

shows the following with regard to the person named above:

Post or station .....

Remarks: Present

Book mark: .....

J. A. Boyd

(546) Copyist.

S | **13 H. Art'y.** | **U.S.C.T.**

Jacob A. Sauter

Capt., Co. A, 13 Reg't U. S. Col'd H. Art'y.

Age ..... years.

Appears on

Company Muster Roll*

for to Dec 31, 1864.

Joined for duty and enrolled:

When Nov 23, 1864.

Where Paducah Ky

Period 3 years

Mustered in:

When Nov 23, 1864

Where Paducah Ky

Present or absent Present

Stoppage, $.....100 for .....

Due Gov't, $.....100 for.....

Valuation of horse, $.....100

Valuation of horse equipments, $.....100

Remarks: Appointed Acting Asst Surg of this 13 U.S. Colored Artly

(over)

* First current roll. No muster-in roll of this company on file.

Book mark: .....

J. T. T. Hughes

(3586)

Copyist.

JAN. 16 5519707 1891

(Heavy) to rank as such
from July 23, 64. Transferred
into the U.S. Service as
Captain Co. A. 13th U.S.
Colored Arty (Heavy)
Nov 23/64 at Paducah
Ky by Lieut D.C. McIver
A.C. Dr Dist of West
Ky

S | 136. Artl | U.S.C.T.

Jacob A. Smiter

Corpl. Co. A 13 Regt U.S.C.H.A

Return

of the Post of Smithland, Ky.,

for the month of Dec., 1864,

dated January 1, 1865,

shows the following with regard to the person named above:

Post or station .....

Remarks: Present

Book mark: .....

J. A. Boyd

Copyist.

S | 13 Kentucky | U S C T.

Jacob A. Sumter

Capt. Co. A 13th Regt. U. S. C. Hv. A.

Return

of the Post of Smithland, Ky.,

for the month of January, 1865,

dated January 31, 1865,

shows the following with regard to the person named above:

Post or station

Remarks: Absent with leave in accordance with S.O. No. 175 Dist. Ked. Ds. Jany 24, 65.

Book mark:

J. A. Boyd

Copyist.

A 1/3 N Arty Vols, &c.

Jacob A. Suiter

Capt C.A. 13th Regt U.S.C.H.A.

Return

of the Post of Smithland, Ky.,

for the month of Apr, 1865;

dated Apr 30, 1865;

shows the following with regard to the person named above:

Post or station .....

Remarks: .....

.....

.....

.....

.....

.....

.....

.....

.....

.....

.....

.....

.....

.....

.....

.....

.....

.....

Book mark: .....

W. B. Davis.

S | **13 H. Art'y.** | **U.S.C.T.**

Jacob A. Suiter

Capt., Co. A, 13 Reg't U. S. Col'd H. Art'y.

Appears on

Company Muster Roll

for Mar. & Feb, 186 5.

Present or absent Present

Stoppage, $ 100 for

Due Gov't, $ 100 for

Valuation of horse, $ 100

Valuation of horse equipments, $ 100

Remarks: Appointed Captain of the 13th U.S. Col'd Arty (Heavy) to rank as such from July 23d 1864. Mustered into the U.S. Service as Capt. Co. A. 13 U.S. Col'd Arty (Hy) Nov. 23/64 at Paducah Ky by Lt. D.C. McIver A.C. to M. Dist of West Ky

Book mark:

W. T. Hughes

(358) Copyist.

S | 1 3H. Arty U.S.C.T.

Jacob Suiter

Capt. Co. A 13 Regt. U.S.C.H.A.

Return

of the Post of Smithland, Ky.,

for the month of Feby, 1865,

dated March 1, 1865,

shows the following with regard to the person named above:

Post or station

Remarks: Present

Book mark:

J.A. Boyd

Copyist.

S 13 H. Artly U.S.C.T.

Jacob A. Suiter

Capt. Co. A 13 Regt. U.S.C.H.A.

Return

of the Post of Smithland, Ky.,

for the month of March, 1865,

dated March 31, 1865,

shows the following with regard to the person named above:

Post or station .....

Remarks: .....

.....

.....

.....

.....

.....

.....

.....

.....

.....

.....

.....

.....

.....

.....

.....

Book mark: .....

J. A. Boyd

Copyist.

S | **13 H. Art'y.** | **U.S.C.T.**

Jacob A. Suiters

Capt, Co. A, 13 Reg't U. S. Col'd H. Art'y.

Appears on

Company Muster Roll

for Mch & April, 186 5.

Present or absent Present

Stoppage, $ 100 for

Due Gov't, $ 100 for

Valuation of horse, $ 100

Valuation of horse equipments, $ 100

Remarks: Appointed Capt. of the 13 U.S. Col'd Arty (Heavy) to rank as such from July 23/64. Mustered into the U.S. Service as Capt. of Co. "A" 13 U.S. Col'd Arty (Hy) Nov 23/64 at Paducah, Ky by Lieut D. C. McIver, A.C.M. Dist of West Ky

Book mark:

W. T. Hughes

(358) *Copyist.*

Of | 13. N. Arty | Mus. Co. I

Jacob. A. Suiter.

Capt Co A 13 Regt Mus. Co. I. N. A.

Return

of the Post of Smithland, Ky.,

for the month of May, 1866;

dated May 31, 1865;

shows the following with regard to the person named above:

Post or station .....

Remarks: .....

Book mark: .....

W. B. Davis,

Copyist.

S | 13 H. Art'y. | U.S.C.T.

Jacob A. Suiter

Capt, Co. A, 13 Reg't U. S. Col'd H. Art'y.

Appears on

Company Muster Roll

for January & June, 186 5.

Present or absent Present

Stoppage, $ 100 for

Due Gov't, $ 100 for

Valuation of horse, $ 100

Valuation of horse equipments, $ 100

Remarks: Commdg Company Since date Muster.

FROM SECOND AUDITOR'S ROLL.

Book mark:

W. T. Hughes

Copyist.

S | **13 H. Art'y.** | **U.S.C.T.**

Jacob A. Smith

Capt., Co. A, 13 Reg't U. S. Col'd H. Art'y.

Appears on

Company Muster Roll

for July & Aug, 186 5.

Present or absent Absent

Stoppage, $ 100 for

Due Gov't, $ 100 for

Valuation of horse, $ 100

Valuation of horse equipments, $ 100

Remarks: Absent on Sick Leave

since Aug 9. 65

NEXT ROLL ON FILE MUSTER OUT.

Book mark:

W. A. Hughes

Copyist.

(358)

S | 13 | A | U.S.C.T.

Jacob A. Sueiter

Sept. Co. A, 13 U.S.C.H.A.

Return

of the Post of Covington and Newport, Ky.,

for the month of Sept, 1865,

dated Oct 1, 1865,

shows the following with regard to the person named above:

Post or station

Remarks: Commanding Post since Sept. 18-1865.

Book mark:

(546) J. R. McCoach Copyist.

A | 13 H. Art'y. | U.S.C.T.

Jacob A. Suiter

Capt., Co. A, 13 Reg't U. S. Col'd H. Art'y.

Appears on **Returns** as follows:

Nov. 1864 Present. Assumed
command of Co. Nov. 30/64
in obedience to Genl. orders
No. 1 from Regl. Hds. 2nd
Dated Nov. 23/64.
Dec 1864 Present
Jany. 1865 Absent with leave since
Jany. 26/65.
Feb. & March/1865 Present
Apr. 1865 Present sick
May & June/1865 Present
July 1865 Present sick in
quarters
Aug. 1865 Absent on sick leave
since Aug. 9/65.
Sept. 1865 Present Comdg. Regt.

Book mark:

(646) Copyist.

S | 13 H. Art'y. | U.S.C.T.

Jacob A. Santus

Capt., Co. A, 13 Reg't U. S. Col'd H. Art'y.

Appears on **Co. Muster-out Roll,** dated

Louisville Ky, Nov 18, 186 5.

Muster-out to date Nov 18, 186 5.

Last paid to July 31, 186 5.

Clothing account:

Last settled ....., 186 ; drawn since $ 100

Due soldier $ ....100; due U. S. $ 100

Am't for cloth'g in kind or money adv'd $ 100

Due U. S. for arms, equipments, &c., $ 100

Bounty paid $ ....100; due $ 100

Remarks: .....

Has never received travelling allowances to date of original enrollment. Has never received pay for Cond'g from Nov 23. 64 to Aug 5th 65

Book mark: S. 821 C.T. 1865

M. G. Hughes

(361) *Copyist.*

S. | 13. Ky Cavy. | Ufc T.

Jacob A. Suter

Captain, Co. ....., 13 Reg't Ky Volunteer Ky Cavy

NOTATION.

Book mark: S. 821. C. T. 1864

War Department,

Adjutant General's Office,

Washington, April 2d, 1886.

See also Co F. 1st Ohio Ky Cavy

A. M. Mazzy

(438) Copyist.

Suitor. J. A.

Capt. Co. A, 13 Reg't Vt. Vol.

5 **Enclosures.**

Bed Cards	Final Statements
Burial Records	Furloughs or L. of A.
Certs. of Dis. for Discharge	Med. Certificates
C. M. Charges	Med. Des. Lists
Descriptive Lists	Orders 2
Discharge Certificates	Pris. of War Record
Enlistment Papers	Resignations

Other papers relating to—

Admission to Hosp'l	Furlough or L. of A. /
Casualty Sheet	Med. Examination
Confinement	Misc. Information /
Contracts	Pay or Clothing
Death or Effects	Personal Reports
Desertion	Rank
Discharge from Hosp'l	Transfer to Hosp'l
Discharge from Service	Transfer to V. R. C.
Duty	Transportation

MICROFILM PUBLICATION M 1834

COMPILED MILITARY SERVICE RECORDS
OF VOLUNTEER UNION SOLDIERS WHO SERVED WITH
THE UNITED STATES COLORED TROOPS (USCT)
13TH REGIMENT OF HEAVY ARTILLERY

PERSONAL PAPERS' TARGET SHEET

PLEASE NOTE THE CHECKED INFORMATION ABOUT THE PERSONAL PAPERS IN THIS FILE:

☐ NO PERSONAL PAPERS WERE FOUND IN THIS FILE WHEN THE RECORDS WERE ARRANGED FOR MICROFILMING.

☒ 6 PERSONAL PAPER(S) FOUND IN THIS FILE WHEN THE RECORDS WERE ARRANGED FOR MICROFILMING.

Co. "A"
Headquarters, 13th U.S.C.H.A.
Smithland, Ky, Jan. 16, 65

Suiter,
Capt. Jacob A.,
Co. "A" 13th U.S.C.H.A

Applies for a leave of absence of Ten days, with permission to apply for an extension of Ten days, to go to his home in Southern Ohio.

Headquarters 13th U.S.C.H.A,
Smithland, Ky.,
January 16, 1865.

Approved and respectfully forwarded.

Jas. S. Watson
Major Commanding
13th U.S.C.H.A

Headquarters, Post
Smithland, Ky
January 16th, 1865

Approved and forwarded
Chas. E. Thurston
Brig. Gen. U.S.V.
Commanding Post

Leave 10 days

L.R.S. d. 20 Jan 1865.

Headquarters Co. A, 13th U. S. C. H. A.
Smithland, Kentucky,
January 16, 1865.

Capt. James Graham,
A. A. G., Dist. North Kentucky.

Captain:

I have the honor to request a leave of absence for ten days, with permission to apply for an extension of Ten days, with a view of visiting my home in Southern Ohio, on important private business.

A sufficient number of officers are present to admit of my going, without detriment to the service.

Hoping you will consider my case as deserving your approbation.

I am, Captain,
Your most Obdt Servt
J. A. Smith
Capt. Co. A., 13th U.S.A.H.A.

Headquarters Department of Kentucky,

Louisville Ky July 26th 1865.

Special Orders,
No. 134

(Extract.)

* * * * * * * * *

11 On Surgeon's Certificate, approved by Medical Director, leave of absence is hereby granted the following named officers, for the number of days set opposite their respective names:

Capt J. A. Sinton, 13th U.S.C.H.A. for twenty (20) days.

* * * * * * * * *

The following extracts from Regulations and General Orders, relative to leaves of absence, will be strictly observed:

"When not otherwise specified, leaves of absence will commence the day an officer is relieved from duty at his post, after receiving the order granting him leave.

"At the expiration of his leave, the officer must report in person *with his* command, and *not* at the office from which his leave issued.

"No officer is permitted to visit Washington without special permission from the Secretary of War, which must be stated in the order granting leave of absence.

"If an officer be not able to travel at the expiration of his sick leave, he must report his address to the commander of his post, regiment or corps, and also to the Adjutant General of the Army; and in his first report state the day when his leave of absence commenced. These reports must be repeated every twenty days, and each one must be accompanied by the certificate of a *medical officer of the army*, made in the usual form, and stating that the officer is not able to travel. If there is no army physician in the place where the officer resides, the certificate of a citizen physician, the truth of which must *be sworn to before a civil magistrate*, may be substituted. *Extensions* of leave *are not granted in orders*.

"Officers absent from duty without leave, or beyond the time of their leaves, will not be allowed to draw pay until a court or commission, which will be ordered on their return to their post or command, shall determine whether there was sufficient cause for their absence. They will accordingly provide themselves with a full description of the nature and cause of their disability, certified by the proper medical authority as required by existing orders and regulations."

By command of Major General J. M. Palmer

Benj. W. Sullivan

Assistant Adjutant General.

C. O. 13th U.S.C.H.A.
Camp Nelson

I certify that to the best of my knowledge and belief Capt. Capt J. H Sexton - 13th U.S.C. Cavy (Negro) has made the required Returns of all Government Property for which he has ever been responsible, and that he is not indebted to the United States in any account whatever.

J. T. Foster Colonel,
13th U.S.C. Cavy (Negro)

I certify that Capt- J A Sinter B U. S. C. A. (Heavy) is not indebted to me as Quartermaster of said Regiment.

Geo W Albright 1st Lieut
Mus A R 2 Mil 13 U.S.C.A. (Negro)

Affidavit of
Capt J A Sutter
Co A 13th Ills Art Hy

Sold by J. H. H. Woodward, Louisville, Ky.

I, Jacob A. Suiter, late Captain of Company A, of the 13th Regiment of U. S. C. Arty (Heavy) do hereby depose and say that I was commissioned as Captain and mustered into the service of the United States as such on the 23d day of November 1864, and was mustered out of said service on the Eighteenth day of November, 1865, then holding the rank of Captain in the 13th Regiment of U. S. C. Arty (Heavy), that I never served in any other organizations than the above mentioned; that, during my term of service, I have, to the best of my ability, duly rendered complete and correct returns of all Clothing and Camp and Garrison Equipage for which I ever receipted or became in any manner responsible, whether said Government property was captured from the enemy, duly invoiced to me, or came informally into my possession. and that I am not now indebted to the United States in any account whatever

J. A. Suiter

late Capt 13d U. S. C Arty (Heavy)

Sworn and subscribed to before me, this 23d day of November 1865,

at Louisville, Kentucky

H M Carr

Notary Public

Jefferson County

Kentucky

SPECIAL ORDERS }
No. 525. }

HEADQUARTERS OF THE ARMY,
ADJUTANT GENERAL'S OFFICE,
Washington, December 20th, 1867.

(*Extract.*)

* * * * *

5. Under the provisions of Joint Resolution of Congress, approved July 26th, 1866, the muster into service of Captain *Jacob A. Suiter*, 13th U. S. Colored Artillery. (Heavy,) of date November 23d, 1864, is, by direction of the Secretary of War, hereby amended to date October 17th, 1864, and he is mustered for pay from October 17th, 1864, to November 22d, 1864, both dates inclusive. Any pay Captain *Suiter* may have received as an enlisted man of Company "F," 1st Ohio Heavy Artillery, for services rendered during the period for which he is now mustered, will be deducted from the amount otherwise due him by virtue of this amended muster.

* * * * *

* * * * *

BY COMMAND OF GENERAL GRANT:

E. D. TOWNSEND,
Assistant Adjutant General.

OFFICIAL:

E D Townsend
Assistant Adjutant General.

General Pelouze.

Capt Suiter

13 U.S. Cold Artry

Soldiers Additional Relief
Co. F. 1st O. H. A. Act 1864.
Room 54.

SPECIAL ORDERS
No. 525.

HEADQUARTERS OF THE ARMY,
ADJUTANT GENERAL'S OFFICE,
Washington, December 20th, 1867.

(*Extract.*)

* * * * *

5. Under the provisions of Joint Resolution of Congress, approved July 26th, 1866, the muster into service of Captain *Jacob A. Suiter*, 13th U. S. Colored Artillery. (Heavy,) of date November 23d, 1864, is, by direction of the Secretary of War, hereby amended to date October 17th, 1864, and he is mustered for pay from October 17th, 1864, to November 22d, 1864, both dates inclusive. Any pay Captain *Suiter* may have received as an enlisted man of Company "F," 1st Ohio Heavy Artillery, for services rendered during the period for which he is now mustered, will be deducted from the amount otherwise due him by virtue of this amended muster.

* * * * *

BY COMMAND OF GENERAL GRANT:

E. D. TOWNSEND,

Assistant Adjutant General.

OFFICIAL:

E. D. Townsend

Assistant Adjutant General.

General Brooks

1989

Sumner. James

Co D, 13 U.S. Col'd H. Art'y.

Private	Private

CARD NUMBERS.

1 5-5-1722 6	26
2 5-5-15-907	27
3 5-5-15-979	28
4 5-5-2 2 1 9 2	29
5 5-5-2 2 3 4 5-	30
6 5-5-1 9 5-2 6	31
7 5-5-2 2 4 9 5	32
8 5-5-1 9 5-11	33
9 9 1 2 8 5-8 9	34
10	35
11	36
12	37
13	38
14	39
15	40
16	41
17	42
18	43
19	44
20	45
21	46
22	47
23	48
24	49
25	50

Book Mark:

See also

I | 13 H. Art'y. | U.S.C.T.

James Sumner

....., Co. D, 13 Reg't U. S. Col'd H. Art'y.

Appears on

Company Descriptive Book

of the organization named above.

DESCRIPTION.

Age 18 years; height 5 feet 3 inches.

Complexion Blk

Eyes Blk; hair Blk

Where born Alabama

Occupation Laborer

ENLISTMENT.

When Mar 16, 1863.

Where Alton Ill

By whom Capt Collins; term 1 y'rs.

Remarks:

Deadric N

(383*g*) *Copyist.*

S | 13 H. Arty **U.S.C.T.**

James Sumner

Pvt., Co. D, 13 Reg't U. S. Col'd H. Arty

Appears on a

Detachment Muster-out Roll

of the organization named above. Roll dated

Louisville Ky., Feb 1st, 1865.

Muster-out to date Nov 18, 1865.

Last paid to Pay due from enlistm 1861

Clothing account:

Last settled ....., 186 ; drawn since $ 100

Due soldier $ ..... 100 ; due U. S. $ 7 69/100

Am't for cloth'g in kind or money adv'd $ 100

Due U. S. for arms, equipments, &c., $ 100

Bounty paid $ 33 33/100 due $ 100

Remarks: Absent in confinement at Lexington, Ky at Co mus ter out.

Tried by G.C.M. for murder, found not guilty, but guil ty of voluntary manslaughter,

Book mark:

Collings

(349) *Copyist.*

JAN. 1916 ☆ 5519511 ☆ 1891

and sentenced to be dishonorably dismissed the service, with loss of all pay that is or may become due him and to be confined at hard labor for the period of two years. So much of sentence as relates to hard labor remitted by G.C.M.O. No 6, Hd. Qrs Dept. Ky. Jan 22, 1866
Ordered to report for muster out by letter dated Hd. Qrs. Dept of Ky, Jan 30, 1866
Discharged in accordance with Circ from A.G.O. of June 29/65. Muster out to date from Nov 15, '65, date of Co. Muster out.

S | 13 H. Art'y. | U.S.C.T.

James Sumner

Appears with rank of Pvt on

Muster and Descriptive Roll of a Detachment of U. S. Vols. forwarded Organized

for the 13 Reg't U. S. Col'd H. Art'y. Roll dated

Not Dated, , 186 .

Where born Alabama

Age 18 y'rs; occupation Laborer

When enlisted Mar 10, 1863.

Where enlisted Alton, Ill.

For what period enlisted 1 years.

Eyes Blk; hair Blk,

Complexion Blk; height 5 ft. 3 in.

When mustered in Mar 10, 1863.

Where mustered in Alton, Ill.,

Bounty paid $ 100; due $ 100 00

Where credited 6 Comp. Rect. Ill.

Company to which assigned D,

Remarks:

Book mark:

B Gaylor

(339) Copyist.

S 13th Arty | U.S.C.T.

James Sumler

Appears with rank of Pvt on

Muster and Descriptive Roll of a Detachment of U. S. Vols. forwarded

for the 13 Reg't U. S. Col'd 2 Arty Roll dated

Alton Ill, Mch 11, 186 3.

Where born Alabama

Age 18 y'rs; occupation Laborer

When enlisted Mch 10, , 186 3.

Where enlisted Alton Ill

For what period enlisted 1 years.

Eyes blk ; hair blk

Complexion blk ; height 5 ft. 3 in.

When mustered in Mch 10, 186 3.

Where mustered in Alton Ill

Bounty paid $ 100 ; due $ 100

Where credited Nettle Creek Grundy Co Ill

Company to which assigned

Remarks:

Book mark:

Rose

(339) *Copyist.*

8 | 13 H. Art'y. | **U.S.C.T.**

James Sumner

Appears with rank of Pat on

Muster and Descriptive Roll of a Detachment of U. S. Vols. forwarded

for the 13 Reg't U. S. Col'd H. Art'y. Roll dated

Camp Butler Ill, Mch 23, 1865.

Where born Alabama

Age 18 y'rs; occupation Laborer

When enlisted Mch 10, 1865.

Where enlisted Alton Ill

For what period enlisted 1 years.

Eyes Blk; hair Blk

Complexion Blk; height 5 ft. 3 in.

When mustered in Mch 10, 1865.

Where mustered in Alton Ill

Bounty paid $ 100; due $ 100 100

Where credited Nettle Creek Grundy Co Ill 6 Dist

Company to which assigned

Remarks:

Book mark:

Rose

(339) *Copyist.*

13 H. Art'y. | U.S.C.T.

James Summers

Pvt., Co. D, 13 Reg't U. S. Col'd H. Art'y.

Age ..... years.

Appears on

Company Muster Roll*

for Feb 30, 1865.

Joined for duty and enrolled:

When March 10, 1865.

Where Alton Jail

Period ..... years

Mustered in:

When March 10, 1865.

Where Alton

Present or absent Present

Stoppage, $ 100 for .....

Due Gov't, $ 100 for .....

Valuation of horse, $ 100

Valuation of horse equipments, $ 100

Remarks: County Jail Alton

* First current roll. No muster-in roll of this company on file.

Book mark: .....

(3586)

Copyist.

U.S.C.T.

James Sumner

Pvt., Co. D, 13 Reg't U. S. Col'd Hvy

Appears on

Company Muster Roll

for May & June, 1865.

Present or absent Present

Stoppage, $ 100 for

Due Gov't, $ 100 for

Valuation of horse, $ 100

Valuation of horse equipments, $ 100

Remarks: Has Record for U.S. Bounty Due 2nd Enlistment Govt Bounty

FROM SECOND AUDITOR'S ROLL.

NEXT ROLL ON FILE MUSTER OUT.

Book mark:

Leger

(358) *Copyist.*

I | **13** H. Art'y. | **U.S.C.T.**

James Summers

Pvt., Co. D, 13 Reg't U. S. Col'd H. Art'y.

Appears on **Co. Muster-out Roll,** dated Louisville Ky, Nov 18, 1865.

Muster-out to date ....., 186 .

Last paid to ....., 186 .

Clothing account:

Last settled ....., 186 ; drawn since $ 100

Due soldier $ ..... 100; due U. S. $ 100

Am't for cloth'g in kind or money adv'd $ 7 69/100

Due U. S. for arms, equipments, &c., $ 100

Bounty paid $ 33 1/3 100; due $ 33 1/3 100

Remarks: Absent on confine-
ment at Lexington Ky
since Sept 2/65 - Not
Mustered out with or-
ganization. No Discharge
furnished.

Book mark: MO on file G.C. MO No 6
Hd. D. Ky. Jan 22/66.

Roger

(361)

S | 13th Art'y. | U.S.C.T.

James Summer

Pvt., Co. D, 13 Reg't U. S. Col'd Hvy Art'y,

Appears on a

List of Discharges furnished by C. M. O. of State,

under the provisions of circular dated A. G. O.,
June 29, 1865.

Discharge furnished Feb. 1, 1866,

to date from Nov. 18, 1865.

Remarks:

Book Mark:

Partenheimer

(360) *Copyist.*

Saunder, James

....., Co. ....., 13 Reg't U. S. C. H. A.

2 Enclosures.

Bed Cards	Final Statements
Burial Records	Furloughs or L. of A
Certs. of Dis. for Discharge	Med. Certificates
C. M. Charges	Med. Des. Lists
Descriptive Lists	Orders
Discharge Certificates	Pris. of War Record
Enlistment Papers /	Resignations

Other papers relating to—

Admission to Hosp'l	Furlough or L. of A
Casualty Sheet	Med. Examination
Confinement	Misc. Information /
Contracts	Pay or Clothing
Death or Effects	Personal Reports
Desertion	Rank
Discharge from Hosp'l	Transfer to Hosp'l
Discharge from Service	Transfer to V. R. C.
Duty	Transportation

MICROFILM PUBLICATION M 1834

COMPILED MILITARY SERVICE RECORDS
OF VOLUNTEER UNION SOLDIERS WHO SERVED WITH
THE UNITED STATES COLORED TROOPS (USCT)
13TH REGIMENT OF HEAVY ARTILLERY

PERSONAL PAPERS' TARGET SHEET

PLEASE NOTE THE CHECKED INFORMATION ABOUT THE PERSONAL PAPERS IN THIS FILE:

☐ NO PERSONAL PAPERS WERE FOUND IN THIS FILE WHEN THE RECORDS WERE ARRANGED FOR MICROFILMING.

☒ 5 PERSONAL PAPER(S) FOUND IN THIS FILE WHEN THE RECORDS WERE ARRANGED FOR MICROFILMING.

NOTE 1.—This blank will be used for both enlistments and re-enlistments—enlistment of veterans, &c., in the volunteer service. They will be made out in duplicate in all cases—one to accompany the recruiting return of the superintendent (not the recruiting officer) to the Adjutant General, and one to accompany the accounts of the officer who pays bounty, &c. The Regiment and Company in which the soldier last served should be given on the back.

NOTE 2.—An enlistment holds to service. A muster-in must, in all cases, precede payment of pay, bounty, pension, &c. A muster-in roll must, in all cases, be filed in the Adjutant General's Office as evidence of muster-in. The mustering officer, commissary, or assistant commissary of musters, as the case may be, will countersign both enlistments as having mustered the soldier into the service of the United States before either of them is given to the disbursing officer.

DECLARATION OF RECRUIT.

I, James Sumles, desiring to be
VOLUNTEER as a Soldier in the Army of the United States, for the term of ~~THREE~~ one YEARS,
Do Declare, That I am Eighteen years and ..... months
of age; that I have never been discharged from the United States service on account of disability or by sentence of a court martial, or by order before the expiration of a term of enlistment; and I know of no impediment to my serving honestly and faithfully as a soldier for ~~three~~ one years.

GIVEN at Union Springs
the 10th day of March 1865

Witness: E. T. Mood. James × Sumler
mark

Volunteered at Union Springs
the 10th day of March, 1865,
By Lt Col Cullum
Cap't Regiment 12th Cavalry

No. .....

13th U. S. Col'd Cav.

Discharged .....
.....
Reg't of .....
.....
.....
.

VOLUNTEER ENLISTMENT.

STATE OF Illinois TOWN OF Alton

I, James Sumler, born in ....., in the State of Alabama, aged Eighteen years. and by occupation a Laborer, DO HEREBY ACKNOWLEDGE to have volunteered this 10th day of March, 1863, to serve as a Soldier in the Army of the United States of America, for the period of THREE YEARS, unless sooner discharged by proper authority: Do also agree to accept such bounty, pay, rations, and clothing, as are, or may be, established by law for volunteers. And I, James Sumler, do solemnly swear, that I will bear true faith and allegiance to the United States of America, and that I will serve them honestly and faithfully against all their enemies or opposers whomsoever; and that I will observe and obey the orders of the President of the United States, and the orders of the officers appointed over me, according to the Rules and Articles of War.

Sworn and subscribed to, at Alton Ills this 10th day of March, 1863, BEFORE Wm D Collins Capt Co "A" 12th Reg Ill Vol Inf

his James × Sumler mark

I CERTIFY, ON HONOR, That I have carefully examined the above-named Volunteer, agreeably to the General Regulations of the Army, and that, in my opinion, he is free from all bodily defects and mental infirmity, which would in any way disqualify him from performing the duties of a soldier.

W McPierce
12th Dist Ills

EXAMINING SURGEON.

I CERTIFY, ON HONOR, That I have minutely inspected the Volunteer James Sumler previously to his enlistment, and that he was entirely sober when enlisted; that, to the best of my judgment and belief, he is of lawful age; and that, in accepting him as duly qualified to perform the duties of an able-bodied soldier, I have strictly observed the Regulations which govern the recruiting service. This soldier has blk eyes, blk hair, blk complexion, is 5 feet 3 inches high.

Wm D Collins
Capt Co A 12th Reg Ills Volunteers.

RECRUITING OFFICER.

(A. G. O. No. 74 & 76.)

Certificate for the Signature of the Mustering Officer, Commissary, or Assistant Commissary of Musters, as the case may be.

Mustered into the service of the United States, for three years or during the war, from date of enlistment, in Co. 2 Regiment of Col Stewart's Illinois Volunteers, on the 10th day of March, 1863, at Alton, and credited to ..... Ward, (or Sub-district,) in the Town of ....., in the County of ....., Illinois,

.....th Congressional District, in the State of .....

Bounty paid at time of Muster-in: .....

U. S. Bounty, ...

Local Bounty, ...

Wm D Collins
Capt Co A 12th Reg Ills Vol

Form No. 733, A. G. O.—Feb. 4-20.

DO NOT USE SMALL SLIPS.

c3—6856

{ Each clerk will sign his surname to steps taken by him, adding his room number. Indicate dates thus: 4-8-18. }

DO NOT USE SMALL SLIPS.

THIS SPACE FOR OFFICE MEMORANDA.

Corr Sec. for determination of finial record.
The records show that James Sumner, Co. D 13
U.S. Cold'd H Arty was enlisted m/pr Mch 10/65 at
Alton, Ill. for 1 yr. Detachment M.O. Roll
dated Louisville, Ky Feb. 1, 1865 shows him mus-
tered out to date Nov. 18, 1865 with following re-
mark: Absent in Confinement at Lexington, Ky.
at Co. muster out. Tried by G.C.M. for murder,
found not guilty, but guilty of Voluntary man-
slaughter and sentenced to be dishonorably dismissed
the service with loss of all pay that is or may be-
come due him and to be confined at hard labor
for the period of two years. So much of the sen-
tence as relates to hard labor remitted by G.C.M.O.
No 6 Hd Qrs Dept. Ky. Jan 22, 1866. Ordered to report
for muster out by letter dated Hd. Qrs. Dept of Ky.
Jan 30, 1866. Discharged in accordance with
Circ. from A.G.O. of June 29/65: Muster out to
date from Nov. 18/65, date of Co. muster out." No
pp. or Book mark.

NOV 17 1921

Currier
Jnow

Orgn. Rec. Sec.

For copy of G.C.M.O #6. Hdq Dept of Kentucky. 1866

Cor Sec
Iarr.

11/21/21.

Cor. Sec.:—

See printed copy. Herewith.

Currier
per J.E.B.

11/27/21.

OFFICE OF
AUDITOR FOR WAR DEPARTMENT
IN REPLYING QUOTE INITIALS
FS-506.

TREASURY DEPARTMENT

WASHINGTON

November 19th, 1921.

The Adjutant General,
War Department,
Washington, D.C.

Sir:

James Sumner, late private Co. D, 13th Regt. United States Colored Hy. Arty. (Civil War) was paid on the company rolls to include June 30, 1865.

His name is borne on the Company Muster-out Roll, dated Louisville, Ky., Nov. 18, 1865, but he received no pay on said roll.

Opposite his name in the column or remarks appears the following: "Absent in confinement at Lexington Ky. since Sept 2/65. Not mustered out with organization. No Discharge furnished."

No further payment or record of service has been been found from the data furnished.

No record of payment on final statement or muster-out roll.

Respectfully,

J. R. McCARL,
Comptroller General.
By F

Vou. 514-1551.
" 1755-1752.

C-104.

RECEIVED
NOV 21 1921
OLD RECORDS DIVN.

ORD 8

WAR DEPARTMENT,

THE ADJUTANT GENERAL'S OFFICE,

WASHINGTON, November 18, 1921.

Respectfully referred to the

General Accounting Office,
War Department Division,
1734 New York Avenue,
Washington, D.C.,

with the request that a statement be furnished as to whether the files of that office contain any record of payment in the case of this soldier on final statements or muster out roll and if so, the date, place and cause of his discharge.

Case of James Sumner, Company D, 13th United States Colored Heavy Artillery, Civil War.

The records of this office show that James Sumner was enrolled and mustered into service March 10, 1865, at Alton, Illinois.

J. T. Kerr
Adjutant General,
In charge of office.

RECEIVED
NOV 19 1921
DATE RECEIVED

Form No. 74—A.G.O.
Ed. Jan. 14-21—50,000.

Jany 17. 1866

Jas. Summers

13. U. S. C. A. Ky.

Prisoner

Ex parte of

Jas. Finley

13. U. S. C. A. Ky.

Kentucky.

1992

Summers. George

Co I, 13 U.S. Col'd H. Art'y.

Artificer	Artificer

CARD NUMBERS.

1	S-S-17937	26	
2	S-S-18570	27	
3	S-S-24326	28	
4	S-S-24484	29	
5	S-S-24642	30	
6	91299799	31	
7		32	
8		33	
9		34	
10		35	
11		36	
12		37	
13		38	
14		39	
15		40	
16		41	
17		42	
18		43	
19		44	
20		45	
21		46	
22		47	
23		48	
24		49	
25		50	

Book Mark:

See also 121" U.S.C.T.

S 798362 O. Cyl

S 1172472 - Double

S 1786969 Shaver

S. 2312898 - Ro Rotd

P2910440 Cordless

D. N. 2-17-16 7.A.O

S. A. Muhleman

46,

S | 13 H. Art'y. | U.S.C.T.

George Summers

....., Co. ....., 13 Reg't U. S. Col'd H. Art'y.

Appears on

Company Descriptive Book

of the organization named above.

DESCRIPTION.

Age 20 years; height 5 feet 9 inches.

Complexion Dark

Eyes Blk; hair Blk

Where born Bath Co. Ky

Occupation Laborer

ENLISTMENT.

When Aug 2d, 186 4.

Where Maysville Ky

By whom Capt Hart; term 3 y'rs.

Remarks: .....

E E Spicombe

(383*g*) *Copyist.*

L | 13 H. Art'y. | U.S.C.T.

George Summers

Artificer, Co. ....., 13 Reg't U. S. Col'd H. Art'y.

Appears on

M. and D. Roll of Men Transferred

to the organization named above,

from Co....., 121 Reg't U. S. Colored Infantry.

Roll dated June 23, 1865.

When ~~enlisted~~ Nov. 22, 1864.

Period for which enlisted 3 years.

When mustered in May 4, 1865.

Present or absent Not stated

Company to which assigned 1

Remarks: Credited to Bath Co. 9 D. Ky.

Book mark :

C. Williams,

(342) *Copyist.*

S | **13 H. Art'y.** | **U.S.C.T.**

George Summers

Artif., Co. I, 13 Reg't U. S. Col'd H. Art'y.

Appears on

M. and D. Roll of Men Transferred

to the organization named above,

from Co E 121 N S C. Inf

Roll dated Camp Nelson Ky June 23, 186 5?

When enlisted 22 Apr, 186 5?

Period for which enlisted 3 years.

When mustered in 4 May, 186 5?

Present or absent Not stated

Company to which assigned

Remarks: Cert to Batt Co. 9 Dist Ky

Book mark :

A Abercrumbie

(342) *Copyist.*

L. | 13 H. Art'y. | U.S.C.T.

George Summers

Serg't, Co. L, 13 Reg't U. S. Col'd H. Art'y.

Age ..... years.

Appears on

Company Muster Roll*

for to June 30, 1865.

Joined for duty and enrolled:

When Apr. 21, 1865.

Where Maysville Ky

Period 3 years

Mustered in:

When May 1 , 1865.

Where Greensburg Ky

Present or absent Present

Stoppage, $ 100 for

Due Gov't, $ 100 for

Valuation of horse, $ 100

Valuation of horse equipments, $ 100

Remarks:

* First current roll. No muster-in roll of this company on file.

Book mark:

(3586) Copyist.

F. | 13 H. Art'y. | U.S.C.T.

Sergeant Commanding

Brig., Co. I, 13 Reg't U. S. Col'd H. Art'y.

Appears on

Company Muster Roll

for July & Aug., 1865.

Present or absent Present

Stoppage, $ 100 for

Due Gov't, $ 100 for

Valuation of horse, $ 100

Valuation of horse equipments, $ 100

Remarks:

NEXT ROLL ON FILE MUSTER OUT.

Book mark:

(358)

Copyist.

E. | 13 H. Art'y. | U.S.C.T.

Henry Summers

Pvt., Co. E, 13 Reg't U. S. Col'd H. Art'y.

Appears on **Co. Muster-out Roll,** dated Louisville Ky., Nov. 18, 1865.

Muster-out to date Nov. 18, 1865.

Last paid to June 30, 1865.

Clothing account:

Last settled ....., 186 ; drawn since $ 100

Due soldier $ ..... 100; due U. S. $ 32 70/100

Am't for cloth'g in kind or money adv'd $ 100

Due U. S. for arms, equipments, &c., $ 100

Bounty paid $ 100 00/100; due $ 100

Remarks: .....

Book mark: .....

S. A. Hall

Copyist.

S | 13 Pa. | U.S.C.T.

Summers, George

_____, Co. I, 13 Reg't U.S.C.T.

1 Inclosures.

Bed Cards	Final Statements
Burial Records	Furloughs or L. of A
Certs. of Dis. for Disch	Med. Certificates
C. M. Charges	Med. Des. Lists
Descriptive Lists	Orders
Discharge Certificates	Pris. of War Record
Enlistment Papers	Resignations

Other papers relating to—

Admission to Hosp'l	Furlough or L. of A
Casualty Sheet	Med. Examination
Confinement	Misc. Information
Contracts	Pay or Clothing
Death or Effects	Personal Reports
Desertion	Rank
Discharge from Hosp'l	Transfer to Hosp'l
Discharge from Service	Transfer to V. R. C.
Duty	Transportation
S. of S. Ref. Slips. 1	

MICROFILM PUBLICATION M 1834

COMPILED MILITARY SERVICE RECORDS
OF VOLUNTEER UNION SOLDIERS WHO SERVED WITH
THE UNITED STATES COLORED TROOPS (USCT)
13TH REGIMENT OF HEAVY ARTILLERY

PERSONAL PAPERS' TARGET SHEET

PLEASE NOTE THE CHECKED INFORMATION ABOUT THE PERSONAL PAPERS IN THIS FILE:

☐ NO PERSONAL PAPERS WERE FOUND IN THIS FILE WHEN THE RECORDS WERE ARRANGED FOR MICROFILMING.

☒ 2 PERSONAL PAPER(S) FOUND IN THIS FILE WHEN THE RECORDS WERE ARRANGED FOR MICROFILMING.

(Attach this end.)

(Write nothing in this space.)

Form No. 434, A. G. O.
Ed. Aug. 1-14-200,000.

c 3—2492

1st Indorsement

War Department, A. G. O., February 17, 1916 -- To the Governor, National Military Home, Montgomery County, Ohio.

The records show that George Summers was mustered into service May 4, 1865, as a private of Company E, 121st United States Colored Infantry Volunteers; that he was transferred to Company I, 13th United States Colored Heavy Artillery Volunteers, and that he was honorably discharged the service with the last-named company November 18, 1865, as an artificer.

The Adjutant General.

Statement of Service Reference Slip.

Summers, George
(Name.

Co E 121 Mich Inf Co I 13 Mich Cav
(Rank and organization.)

Request for military record of the above-named by applicant whose name and address are shown by attached carbon copy of answer.

M.I. May 4, 1865 as
Pvt Co E 121 Mich Inf
Mo. with Co Mar 18. 1865
as Artif Co I 13 Mich Cav
to which transferred.

Johnson
T.A.G.

Form No. 447-2—A. G. O.
Ed, July 16-15—10,000

1991

Sumer George

Co L, 13 U.S.Col'd H. Art'y.

Private | Private

CARD NUMBERS.

1	26
2 Lu Scorce	27
3	28 George
4	29
5	30
6	31
7	32
8	33
9	34
10	35
11	36
12	37
13	38
14	39
15	40
16	41
17	42
18	43
19	44
20	45
21	46
22	47
23	48
24	49
25	50

Book Mark:

See also

1992

Sutherland, George E

Co B, 13 U.S. Col'd H. Art'y.

Captain	Captain

CARD NUMBERS.

1	55-1653-72	26	
2	5-5-1553-4	27	
3	5-5-2064-3	28	
4	5-5-2079-3	29	
5	5-5-2092-0	30	
6	5-5-2107-7	31	
7	55-2122-7	32	
8	94372-4/	33	
9	S-599-CJ-1864	34	
10		35	
11		36	
12		37	
13		38	
14		39	
15		40	
16		41	
17		42	
18		43	
19		44	
20		45	
21		46	
22		47	
23		48	
24		49	
25		50	

Book Mark: P36. Vol 4 C.J. 1871
S-599-CJ-1864

See also 1st Ky. Arty.

D. 1573314 and MD
D 1580391 " " "

S. A. Muhleman
Jr.

S | 13 H. Art | U.S.C.T.

George E. Sutherland

Capt., Co. B, 13 Reg't U. S. Col'd H. Art

Appears on

Regimental Descriptive Book

(List of Commissioned Officers)

of the regiment named above.

Rank Capt

Date of appointment July 23 1864.

Remarks:

Copyist.

G. W. Chase

I. | 13. H. A. | **U.S.C.T.**

George E. Sutherland

Capt., Co....., 13. Reg't U. S. Col'd H. A.

Age 22 years.

Appears on an

Individual Muster-in Roll

of the organization named above. Roll dated Paducah. Ky., Jany. 19, 1863.

Muster-in to date Jany. 19, 1863.

Joined for duty and enrolled:

When Jany. 19, 1863.

Where Paducah. Ky

Period 3. years.

Valuation of horse, $ 100

Valuation of horse equipments, $ 100

Remarks: Appointed Capt in the 13. U.S.C. H. A. by the Sect of war. July 23. 1864 Went on duty Jany 19/63 Mustered in to date (over)

Book mark: Mustered in & mustered to date Aug. 24. 1864. (over)

Magee

(336) Copyist.

A.N.Y. 5515534 1891

Jany. 19 - 1863.

Enlisted in Co. A. 1st

N.J. Mlty. Sept. 30 1862

Promoted Jany 19 1865

Book Mark: Cont.

And he is mustered for pay
from Aug. 24/64. to Jany.
18/65. both days inclusive
any pay he may have Rec'd
as an enlisted man during
that period to be deducted
$40.55 C. Eq 5. A.G.O. Nov.
3. /66.

S | **13 H. Art'y.** | **U.S.C.T.**

Geo. E. Sutherland

Capt., Co. B, 13 Reg't U. S. Col'd H. Art'y.

Age ..... years.

Appears on

Company Muster Roll*

for Enlistment to Feb. 28, 1865.

Joined for duty and enrolled:

When ..... Jan. 19 ....., 1865.

Where ..... Paducah, Ky. .....

Period 3 years

Mustered in:

When ..... Jan. 19 ....., 1865.

Where ..... Paducah, Ky. .....

Present or absent Present.

Stoppage, $.....100 for .....

Due Gov't, $.....100 for .....

Valuation of horse, $.....100

Valuation of horse equipments, $.....100

Remarks: Appointed Capt. in the 13th U. S. C. Arty. by (order)

* First current roll. No muster-in roll of this company on file.

Book mark: .....

Falconer

(3586)

Copyright.

JAN. 16 5520643 1891

the Secretary of
War, July 23, '64, mus=
ter in to date
Jan. 19, '65.

S | 13 H. Art'y. | U.S.C.T.

George E. Sutherland.

Capt., Co. B, 13 Reg't U. S. Col'd H. Art'y.

Appears on

Company Muster Roll

for Mar. & Apr., 1865.

Present or absent Absent.

Stoppage, $ ..... 100 for .....

.....

Due Gov't, $ ..... 100 for .....

.....

Valuation of horse, $ 100

Valuation of horse equipments, $ 100

Remarks: Appointed by the President to rank from July 23'64. On detached service as per Regimental Special Order No. 26 1864, from Post Hdqrs., Smithland, Ky., Apr. 27'65.

Book mark: .....

× Enrolled by Lieut. Mitchell.

Falconer

(358) *Copyist.*

S | **13 H. Art'y.** | **U.S.C.T.**

Leo. E. Sutherland

Appears with rank of Capt. on

Muster and Descriptive Roll of a Detachment of U. S. Vols. ~~forwarded~~ Organized as Lov. A.

for the 13 Reg't U. S. Col'd H. Art'y. Roll dated

Camp Nelson, June 23, 1865.

Where born .....

Age .....y'rs; occupation .....

When enlisted ....., 186 .

Where enlisted .....

For what period enlisted ..... years.

Eyes ..... ; hair .....

Complexion ..... ; height ..... ft. ..... in.

When mustered in ....., 186 .

Where mustered in .....

Bounty paid $ ..... 100 ; due $ 100

Where credited .....

Company to which assigned .....

Remarks: .....

.....

.....

.....

.....

Book mark: L-599-Cy-1864

.....

(339) Maynard Copyist.

S | 13 H. Art'y. | U.S.C.T.

Geo. E. Sutherland

Capt., Co. B, 13 Reg't U. S. Col'd H. Art'y.

Appears on

Company Muster Roll

for May & June, 1865.

Present or absent Absent

Stoppage, $ ..... 100 for .....

.....

Due Gov't, $ ..... 100 for .....

.....

Valuation of horse, $ 100

Valuation of horse equipments, $ 100

Remarks: Appointed by the President to rank from July 23, '64. Absent on detached service as A. A. G. Smithland, Ky.

.....

.....

.....

Book mark: .....

.....

Falconer

(358) *Copyist.*

S | 13 H. Art'y. | U.S.C.T.

George E. Sutherland

Capt., Co. B, 13 Reg't U. S. Col'd H. Art'y.

Appears on

Company Muster Roll

for July & Aug., 1865.

Present or absent Absent.

Stoppage, $ 100 for

Due Gov't, $ 100 for

Valuation of horse, $ 100

Valuation of horse equipments, $ 100

Remarks: On detached service as A. A. G.,
Post of Smithland, Ky.

NEXT ROLL ON FILE MUSTER OUT.

Book mark:

Falconer

(358) *Copyist.*

S | **13 H. Art'y.** | **U.S.C.T.**

George E. Sutherland

Capt., Co. B., 13 Reg't U. S. Col'd H. Art'y.

Appears on **Co. Muster-out Roll,** dated

Louisville, Ky., Nov. 18, 1865.

Muster-out to date Nov. 18, 1865.

Last paid to Sept. 30, 1865.

Clothing account:

Last settled ....., 186 ; drawn since $ 100

Due soldier $ ..... 100 ; due U. S. $ 100

Am't for cloth'g in kind or money adv'd $ 100

Due U. S. for arms, equipments, &c., $ 100

Bounty paid $ ..... 100 ; due $ 100

Remarks: Entitled to pay for commanding Co. for the month of Mar., '65; to Apr. 13 '65;

Book mark: Dis 342 Mar. 2, 66: P. 36

(over)

(361) Falconer

Copyist.

JAN. 16 5521227 1891 ☆

Vol. 9 L. J. 1871.

S. | 13 Ky. Cavy. | Ufe V.

Geo. E. Sutherland.

Captain, Co. ____, 13 Reg't Ufe Ky Cavy.

P-36-cy NOTATION. Ltr with

Book mark: J 599. C. V. 186x

War Department,

Adjutant General's Office,

Washington June 10th, 1865.

~~Call from~~

~~returned with report~~.

The above book mark was noted on rolls in order to preserve results of search in this case.

See also C. A. 1st Ky Lt Cavy

A. M. Muzzy
Copyist.

(475)

Sutherland, Ger. C.

Capt.; Co. B, 18 Reg't U.S.H.A.-

14 **Enclosures.**

Bed Cards	Final Statements
Burial Records	Furloughs or L. of A.
Certs. of Dis. for Discharge	Med. Certificates
C. M. Charges	Med. Des. Lists
Descriptive Lists	Orders 5
Discharge Certificates	Pris. of War Record
Enlistment Papers	Resignations

Other papers relating to—

Admission to Hosp'l	Furlough or L. of A. 1
Casualty Sheet	Med. Examination
Confinement	Misc. Information 1
Contracts	Pay or Clothing
Death or Effects	Personal Reports 1
Desertion	Rank
Discharge from Hosp'l	Transfer to Hosp'l
Discharge from Service	Transfer to V. R. C.
Duty 1	Transportation

MICROFILM PUBLICATION M 1834

COMPILED MILITARY SERVICE RECORDS
OF VOLUNTEER UNION SOLDIERS WHO SERVED WITH
THE UNITED STATES COLORED TROOPS (USCT)
13TH REGIMENT OF HEAVY ARTILLERY

PERSONAL PAPERS' TARGET SHEET

PLEASE NOTE THE CHECKED INFORMATION ABOUT THE PERSONAL PAPERS IN THIS FILE:

☐ NO PERSONAL PAPERS WERE FOUND IN THIS FILE WHEN THE RECORDS WERE ARRANGED FOR MICROFILMING.

☒ 23 PERSONAL PAPER(S) FOUND IN THIS FILE WHEN THE RECORDS WERE ARRANGED FOR MICROFILMING.

Hd-Qrs. 13th U.S. Art'y Q.O.
Bowling Green, Ky., Aug. 24, 1864.

Respectfully forwarded.
Lewis Brady
1st Lieut. 1st Ohio Res. Lgt. Art'y.
Comdg 13th U.S. Art'y, Q.O.

6
Dpg. Adc. C.S. 1864.
B. 197 - MDC - 1864

Hd. Qrs. 13th U.S. Colored Artillery (Heavy)
Bowling Green Ky. Aug. 24th 1864

Maj. C.W. Foster
A.A.G. & Chief of Colored Bureau
Washington D.C.

Major

I have the honor to state that May 11th /64 I passed Genl. Casey's Examining Board and was informed that I was recommended for the position of Captain. I received Aug 19th a Special Order (No. 258 Par. 10) dated War Department Adjutant-Generals Office Washington D.C. Aug 8th and in compliance therewith I reported in person Aug. 22d to the Comdg. Officer of the 13th U.S. Colored Artillery (Heavy) at Bowling Green Ky.

I therefore respectfully request that a copy of my appointment be sent me through the Comdg. Officer of this Regt. Lt. Col. James Brady

I am Major
Very Respectfully
Your Obdt. Servant
George E. Sutherland Pr. Co. A. 1st N.Y. Art.
Capt. 13th U.S. Colored Art. (Heavy)

S-713-D.C. 1864.

Post Hospital
Clarksville Tenn.
November 22d 1864

Sutherland Geo. E.
Capt 43d U.S. Col Hd Arty
50 13 years 7 mos 2 days

Application for Leave of Absence

Surgeon's Certificate

Head Quarters U.S. Forces
Clarksville and Ft Donelson
Clarksville Tenn Nov 22d 1864

Respectfully forwarded.
recommended.

A. P. Smith
Col 83d Ill. V. V. Cavalry

S. 1389 1 D. of Nov. 25th 1864
Head Quarters Dist Tennessee
Nashville Tenn Nov 24th 1864

Respectfully forwarded
Approved

Thos. J. Rodman
Maj Gen'l Comdg

2AB 848.

Head Qrs. Dpt Cumb'd
Med Director's Office
Chattanooga Nov 28th/64

Approved

D. L. Wright
Asst. Surg. U.S.A.
Act. Med. Dir.
D.C.

Post Hospital Clarksville Tenn.
Nov 22d. 1864

Brig Genl. Wm. D. Whipple
A.A.G. Dept. of the Cumberland
General

I have the honor to request a leave of absence for thirty days, for the following reason

I was wounded at Eddyville Ky, in the left arm, Oct. 13th. from which wound I am still suffering and I wish to visit my home.

My Post-Office address will be Waukau Winnebago Co. Wis.

I am General
Very Respectfully
Your Obdt. Servant
Geo. E. Sutherland
Capt. 13th. U.S.C. Heavy Art.

Capt. Geo. E. Sutherland of the 13th. U.S. Colrd, Heavy Arty, having applied for a certificate on which to ground an application for leave of absence I do hereby certify that I have carefully examined this officer and find that he is suffering from a severe wound in the left arm, received while in the discharge of his duty at Eddyville Ky, Oct. 13th. 1864. And that in consequence thereof he is in my opinion unfit for duty. I further declare my belief that he will not be able to resume his duties in a less period than thirty days.
Dated at Clarksville Tenn.
this 22d. day of November 1864.

U.S. Post-Hospital
Clarksville Tenn Nov 22nd
1864

L.S. Cooper
Surg. 83rd Regt. Ills
Infty & Acting
Post-Surgeon

Head Quarters 13th A. S. C. & A.
Smithland Ky
February 6th 1865

Sutherland, Geo. E.
Co. "B." 13th Ky. S. C. & A. Colored Regt.

Leaves for a re-examination
of Recruits sworn into the
Service of the United States
by Maj. J. E. Gamen 45th
Ills Vol. Inf.

Headquarters 13th W.V.V.I.
Smithland Kentucky
February 6th 1865

Capt James Graham
A.A.A. Genl 2d Div. 4th Army Corps

Captain: I have the honor to apply through you to the General Commanding the Dist of Western Kentucky for a re-examination of the following-named recruits sworn into the service of the United States by Major S.E. Jones 49. Ill. Vols Boonville Post

Charles Hilford — Lewis Mayes — George Price
Stowe Rossington — Grandison Martin — Thos M. Reynolds
Lee Tyler — Benjamin Tyler

I am Captain
Very Respectfully
Your Obt Servt
Lee C. Sutherland
Co "B" 13th W.V.V.I. A.A.A. Com'dg

Head-Quarters Post of Smithland,

Smithland, Ky., April 27, 1865.

Special Orders.
No. 26. (EXTRACT.)

* * * * * * * *

Capt. George E. Sutherland, Battery "I" 1st Regt U.S.C.H.A., is hereby detached from his command, and assigned to duty as Acting Commissary of Subsistence for this Post. He will be obeyed and respected accordingly.

Capt. Sutherland will enter upon the discharge of his duties on the 1st of May, 1865, and receipt for all Commissary Property now in the hands of Lieut. Cogan, relieved by orders from Department Headquarters.

* * * * * * * *

By order of LIEUT. COL. J. T. FOSTER,
Commanding Post.

H. E. Smith
Lieut. and Post Adjutant.

Comdg 3rd Minn Cavalry

O. C. G. O. June 26" 1866

Capt George E. Sutherland 13" U.S.C.H. Artillery

To record on Benton Barracks Camp Books

WWR

Camp Muse Books. O.C.G.O. June 25. 66

Geo. E. Sutherland 13" U.S. Col'd H. Arty

no record.

WMBL

Original Rolls 1864-5 O.C.G.O. June 25. 1866

Geo E. Sutherland

Capt. 13 N.Y.S.C. H. Arty

No records

Escaped Prisoners Book 1-9

WM

No record on Hosp Book 1866

Camp Parole Md. Book No 3 June 25/66

Capt. Geo. E. Sutherland 13" U.S.C.H. Art

(No Record

S. GM

Annapolis Camp Books. A.G.O. June 22. 66.

George E. Sutherland Capt. Co — 13" U.S.C.H. Arty

no records.

MBL

[illegible] July 30, 1865.

Lieut. Southerland
Capt. K.E.
[illegible] Mortal

Head-Quarters Department of Kentucky,

Louisville, Kentucky July 29th 1865.

Special Orders,
No 132

2nd " A General Court Martial will convene at Camp Nelson Ky. at 10 o'clock A.M. July 31st 1865 or as soon thereafter as practicable for the trial of such prisoners as may be brought before it.

Detail for the Court

Capt J. E. Gaither and. 13th U.S.C.H.A.

× × × ×

No other officers than those named can be assembled without manifest injury to the service

By Command of Major General Palmer:

Benj. W. Sullivan
Lt & A.C.L.
Assistant Adjutant General.

A. O.
13th U.S.C.H.A.
Camp Nelson

A. C. S. Office
Smithland Ky.
July 31. 1865.

Commanding Officer
13th Regiment U.S.C.H.Arty.
Camp Nelson Ky.

Sir

I have the honor to report myself on detached service, as A. C. S. Post of Smithland Ky. per "Special Orders No 26" dated "Post Hd Qrs Smithland Ky. April 27. 1865"

I am Sir

Very Respectfully
Your Obdt. Servt.
Geo. E. Sutherland
Corpl 13th U.S.C.H Arty. + A. C. S.

S. O. No. 166,
Sept. 1, 1865.

Head-Quarters Department of Kentucky,

Louisville, Ky. December 1st 1865.

Special Orders,
No. 166

"EXTRACT."

A ~~General Court-martial~~ is hereby appointed, to meet at [illegible] on the [illegible] day of [illegible] or as soon thereafter as practicable, for the trial of such prisoners as may be brought before it.

DETAIL FOR THE COURT.

1 [illegible]
2
3
4
5 [illegible]
6
7
8
9
10
11

[illegible]
Judge Advocate.

No other officers than those named can be assembled without manifest injury to the service.

By Command [illegible] Major General [illegible]

BY COMMAND OF MAJOR GENERAL J. M. PALMER:

Bev. W. Sullivan
Assistant Adjutant General.

[illegible]

Head-Quarters Department of Kentucky,

Louisville, Ky., Sept 11th 1865.

Special Orders,
No. *175*

"EXTRACT."

A General Court-martial is hereby appointed, to meet at Lexington Ky. on the 13th day of September 1865 or as soon thereafter as practicable, for the trial of such prisoners as may be brought before it.

DETAIL FOR THE COURT.

1 Col Clift 2 Regt 12 Ky Cav
2
3 Col Clark 22nd Ky Infantry
4
5 Capt L E Dudley 13th U.S. C.T.
6
7
8
9
10
11

Capt Clift 2 Regt 12 Ky Cav
Judge Advocate.

No other officers than those named can be assembled without manifest injury to the service.
Col Clark 22nd Ky Infantry
BY COMMAND OF MAJOR GENERAL J. M. PALMER:

13th U.S. C.T.

Nicht Dubois
Assistant Adjutant General.

Pressure Data

Sept 23rd '65

Rooms of Genl. Court Martial
Lexington Ky.
Sept. 30th 1865-

Commanding Officer
13th U.S.C.H.Art.
Covington Ky.

Sir

I have the
honor to report myself on Detached duty
as member of a Genl. Court Martial per
Special Order No. 175- from Hd Qrs. Dept.
of Ky. dated Louisville Ky. Sept. 11th 1865-

I am Sir
Very Respectfully
Your Obdt. Servt.
Geo. E. Sutherland
Capt. 13th U.S.C.H.Art.

Rooms of Col. Com. Louis-Marie
Lexington Ky.
October 31st 1865-

Commanding Officer
13th U.S. Col'd Inf. (Heavy)
Louisville Ky.

Sir

I have the honor to report myself an
Absentee serving as a member of a Genl.
Court Martial convened per S.O.
No 173- from Hd Qrs. Dept. of Ky.
dated Louisville Ky. Sept. 11th 1865-
I am Sir
Very Respectfully
Your Obdt. Servt.
Ed. C. Sherrerd
Capt. 13th U.S. Col'd Inf.

Rooms of Military Commission
Lexington Ky. Oct. 21st 1865

Sutherland Geo. E.
Capt. 13th U.S. C. Arty. (Heavy)

Makes application for transfer
to 4th U.S. C. Arty. (Heavy) this Regt.
being ordered to be mustered-out.

Head Quarters
13th U.S. Arty
Covington Ky
Oct 21 1865

Respectfully forwarded
approved

J. T. Foster
Col
13th U.S. Arty

Rooms of Military Commission
Lexington Ky. Oct. 21st 1865.

Brig. Genl. L. Thomas
Adjt. Genl U.S. Army
Washington D.C.

Sir

I have the honor to request a transfer as Capt. from the 13th U.S.C. Inf. (Army) to the 4th U.S.C. Inf. (Army), the former Regt. being about to be mustered out.

I am Sir
Very Respectfully
Your Obdt. Servt.
Geo. E. Sutherland
Capt. 13th U.S.C. Inf. (Army)

Hd Qrs 13th Vscav
Nov 2d 1864

Gen Sutherland
Capt Com 13 Vol. Arty

Requests the Prov Mars
to deliver over One pistol
taken from G Pearsley
on the night of the 14th
November

The Pistol was returned
and receipt given

Hd Qrs. Co. "B" 13th U.S.C. Inf.
Barracks No 1 Louisville Ky.
December 20th 1865.

Provost Marshal
Louisville Ky.

Sir

I have the honor to request that you will deliver to the bearer Capt. Willis Pursley the Revolver taken from him by the Patrol Guard on or about Nov. 14th and oblige

Your Obt. Servt.

Geo. E. Sutherland
Capt. 13th U.S.C. Inf.

I certify that to the best of my knowledge and belief George E. Sutherland, Capt Co. "B" 13th U. S. Inf. (Heavy) has made the required Returns of all Government Property for which he has ever been responsible, and that he is not indebted to the United States in any account whatever

J. T. Foster
Col. 13th U. S. Inf. (Heavy) Comdg

I certify that George E. Sutherland Capt Co. B, 13th U. S. Inf. (Heavy) is not indebted to me as Quartermaster of said Regiment

Geo W Clarke
1st Lt. 13th U. S. Inf. (Heavy)

Affidavit of
Capt Geo E Sutherland
Co B 13th USC Art Ay

Sold by J. H. H. Woodward, Louisville, Ky.

I, F. Morg, E. Southmayd, late Captain of Company "B", of the 13 Regiment of U.S.C.(H.A) do hereby depose and say that I was commissioned as Captain and mustered into the service of the United States as such on the 19th day of January 1865, and was mustered out of said service on the 18th day of November, 1865, then holding the rank of Captain in the 13 Regiment of U.S.C.(H.A), that I never served in any other organizations than the above mentioned; that, during my term of service, I have, to the best of my ability, duly rendered complete and correct returns of all Clothing and Camp and Garrison Equipage for which I ever receipted or became in any manner responsible, whether said Government property was captured from the enemy, duly invoiced to me, or came informally into my possession. And that I am not now indebted to the United States in any account whatever

F. E. D. Southmayd
late Capt Co. B, 13 Regt. U.S.C.H.A.

Sworn and subscribed to before me, this 22nd day of Nov 1865,

at Louisville Kentucky

H. M. Carr

Notary Public

K. C. Ky.

62

Geo E Sutherland

132 U S Colored Hy Artly

SPECIAL ORDERS }
No. 550. }

WAR DEPARTMENT,
ADJUTANT GENERAL'S OFFICE,
Washington, November 3d, 1866.

(*Extract.*)

* * * * *

5. Under Joint Resolution of Congress, approved July 26th, 1866, the muster into service of Captain *George E. Sutherland*, 13th U. S. Colored Artillery, (Heavy,) of date January 19th, 1865, is hereby amended to date August 24th, 1864, and he is mustered for pay from August 24th, 1864, to January 18th, 1865, both dates inclusive. Any pay Captain *Sutherland* may have received as an enlisted man of Battery "A," 1st New York Artillery, for services rendered during the period for which he is now mustered, will be deducted from the amount otherwise due him by virtue of this amended muster.

* * * * *

By order of the Secretary of War:

E. D. TOWNSEND,
Assistant Adjutant General.

OFFICIAL:

Assistant Adjutant General.

General Brock

Sutherland Geo. E.
Capt. 13 N.S.C. N.A.

E

SPECIAL ORDERS
No. 550.

WAR DEPARTMENT,
ADJUTANT GENERAL'S OFFICE,
Washington, November 3d, 1866.

(*Extract.*)

* * * * *

5. Under Joint Resolution of Congress, approved July 26th, 1866, the muster into service of Captain *George E. Sutherland*, 13th U. S. Colored Artillery, (Heavy,) of date January 19th, 1865, is hereby amended to date August 24th, 1864, and he is mustered for pay from August 24th, 1864, to January 18th, 1865, both dates inclusive. Any pay Captain *Sutherland* may have received as an enlisted man of Battery "A," 1st New York Artillery, for services rendered during the period for which he is now mustered, will be deducted from the amount otherwise due him by virtue of this amended muster.

* * * * *

By order of the Secretary of War:

E. D. TOWNSEND,
Assistant Adjutant General.

OFFICIAL:

Assistant Adjutant General.

Colonel Foster

Notice Door 1/11/11
W.H.S.

SPECIAL ORDERS
No. 550.

WAR DEPARTMENT,
ADJUTANT GENERAL'S OFFICE,
Washington, November 3d, 1866.

(*Extract.*)

* * * * *

5. Under Joint Resolution of Congress, approved July 26th, 1866, the muster into service of Captain *George E. Sutherland*, 13th U. S. Colored Artillery, (Heavy,) of date January 19th, 1865, is hereby amended to date August 24th, 1864, and he is mustered for pay from August 24th, 1864, to January 18th, 1865, both dates inclusive. Any pay Captain *Sutherland* may have received as an enlisted man of Battery "A," 1st New York Artillery, for services rendered during the period for which he is now mustered, will be deducted from the amount otherwise due him by virtue of this amended muster.

* * * * *

By order of the Secretary of War:

E. D. TOWNSEND,
Assistant Adjutant General.

OFFICIAL:

Assistant Adjutant General.

Colonel Foster

O-333-DK-VOL 2-65

Louisville July 21st

Capt. W. H. Nagle
J. A. D.C. Dept of Ky

Forwards letter of
Brig. Gen. Gage 13th
U.S.C.T. - J.A. Guil-
ford, communication, with
the request that Capt
G. E. Sutherland be
ordered to report to
Camp Nelson Ky.

13th U.S.C. Hvy. Arty.

13 U.S.C. Hvy. Arty

Rec'd Jul 21-65

Wm H Nagle Col.
And Judge Advocate Dept Ky.
Louisville Ky.

Hd Qrs Dept of Ky
Louisville July 21 65.

Respectfully forwarded
to Capt. E.D. Harlan
U.S.A. Dept of Ky with
the request that the
within named officer
be ordered to report
at Camp Nelson
Kentucky

William H. Nagle
Judge Advocate
Dept of Ky

Court Martial Room
Camp Nelson Ky. July 18th 1863.

Sir

I have the honor to state that Capt.
E. A. Sumerland who is detailed as
a Member of the Court Martial
convened at this place, is now on
duty at Louisville Ky as Act.
Com. Sub. and of course is not in
attendance

I am Col.
Very Respectfully
Your Obdt Servant
H. C. Gibson Asst Col.
12th U.S.C.I. Judge Advocate

Col. Wm. H. Coyl
Judge Advocate
Louisville Ky

1993

Sutherland. Sam

Co E, 13 U.S. Col'd H. Art'y.

Private	Private

CARD NUMBERS.

1	55159651	26	
2	5-5-3313131	27	
3	5-5-2270707	28	
4	5-5-2285252	29	
5	5-5-2299090	30	
6	9128764	31	
7		32	
8		33	
9		34	
10		35	
11		36	
12		37	
13		38	
14		39	
15		40	
16		41	
17		42	
18		43	
19		44	
20		45	
21		46	
22		47	
23		48	
24		49	
25		50	

Book Mark

See also

13 H. Art'y. | U.S.C.T.

Hamil Southerland

....., Co. E, 13 Reg't U. S. Col'd H. Art'y.

Appears on

Company Descriptive Book

of the organization named above.

DESCRIPTION.

Age 47 years; height 5 feet 6 inches.

Complexion Black

Eyes Blk; hair Blk

Where born Jefferson Co Ky

Occupation Laborer

ENLISTMENT.

When Mar 21, 1865.

Where Louisville

By whom Capt Womack; term 3 y'rs.

Remarks:

Beck

(383*g*) *Copyist.*

S | 13 H. Art'y. | U.S.C.T.

Sam Sutherland

Appears with rank of Pvt on

Muster and Descriptive Roll of a Detachment of U. S. Vols. forwarded

for the 13 Reg't U. S. Col'd H. Art'y. Roll dated Louisville Ky Mch 21, 1865.

Where born Jefferson Co Ky

Age 47 yrs; occupation Laborer

When enlisted Mch 21, 1863.

Where enlisted Louisville Ky

For what period enlisted 3 years.

Eyes Blk; hair Blk

Complexion Blk; height 5 ft. 6 in.

When mustered in Mch 21, 1865

Where mustered in Louisville Ky

Bounty paid $ 100; due $ 100

Where credited Jeff Co 3 Dist Ky

Company to which assigned

Remarks:

Book mark:

Rose

Copyist.

S | 13 H. Art'y. | U.S.C.T.

Sam Sutherland

Appears with rank of Pvt on

Muster and Descriptive Roll of a Detachment of U. S. Vols. ~~forwarded~~

Organized as Co. E.

~~for the~~ 13 Reg't U. S. Col'd H. Art'y. Roll dated

Louisville Ky., Apr 12 1865.

Where born Jefferson Ky.

Age 47 y'rs; occupation Laborer

When enlisted Mch 21, 1865.

Where enlisted Louisville Ky.

For what period enlisted 3 years.

Eyes Blk; hair Blk

Complexion Blk; height 5 ft. 6 in.

When mustered in Mch 21, 1865.

Where mustered in Louisville Ky.

Bounty paid $ 100; due $ 100

Where credited

Company to which assigned

Remarks: 5th Dist. Ky.

Book mark:

Harris

Copyist.

S | **13 H. Art'y.** | **U.S.C.T.**

Sam Southerland

Pvt., Co. E., 13 Reg't U. S. Col'd H. Art'y.

Age ..... years.

Appears on

Company Muster Roll*

for May & June, 1865.

Joined for duty and enrolled:

When Mar. 27, 1865.

Where Louisville, Ky.

Period 3 years

Mustered in:

When Mar. 27, 1865.

Where Louisville, Ky.

Present or absent Present.

Stoppage, $ 100 for .....

Due Gov't, $ 100 for .....

Valuation of horse, $ 100

Valuation of horse equipments, $ 100

Remarks: .....

* First current roll. No muster-in roll of this company on file.

Book mark: .....

D C Davis

(3586) Copyist.

S | 13 H. Art'y. | U.S.C.T.

Sam Sutherland

Pvt., Co. E, 13 Reg't U. S. Col'd H. Art'y.

Appears on

Company Muster Roll

for July & Aug -, 1865.

Present or absent Present.

Stoppage, $ 100 for

Due Gov't, $ 100 for

Valuation of horse, $ 100

Valuation of horse equipments, $ 100

Remarks: 1st Asst. Surg. 3 months due $100.

NEXT ROLL ON FILE MUSTER OUT.

Book mark:

D C Davis

Copyist.

S | 13 H. Art'y. | U.S.C.T.

Samuel Sutherland

Pvt., Co. E, 13 Reg't U. S. Col'd H. Art'y.

Appears on **Co. Muster-out Roll,** dated Louisville, Ky., Nov. 15, 1865.

Muster-out to date Nov. 15, 1865.

Last paid to June 30, 1865.

Clothing account:

Last settled ....., 186 ; drawn since $ 100

Due soldier $ 23 37/100; due U. S. $ 100

Am't for cloth'g in kind or money adv'd $ 100

Due U. S. for arms, equipments, &c., $ 100

Bounty paid $ ..... 100; due $ 100 00/100

Remarks: .....

Book mark: .....

B C Davis

(361) *Copyist.*

1994

Sutliff. Robert

Co B, 13 U.S. Col'd H. Art'y.

Private	Private

CARD NUMBERS.

1	5-5-1 5 7 5-5-	26	
2	5-5-1 6 7 5-5-	27	
3	5-5-1 9 5-5 2	28	
4	5-5- 2 0 7 8 9	29	
5	5-5-2 1 4 1 2	30	
6	9 1 2 8 2 2 8	31	
7		32	
8		33	
9		34	
10		35	
11		36	
12		37	
13		38	
14		39	
15		40	
16		41	
17		42	
18		43	
19		44	
20		45	
21		46	
22		47	
23		48	
24		49	
25		50	

Book Mark:

See also

S | 13 H. Art'y. | U.S.C.T.

Tyler Sutliff

....., Co. B, 13 Reg't U. S. Col'd H. Art'y.

Appears on

Company Descriptive Book

of the organization named above.

DESCRIPTION.

Age 21 years; height 5 feet 5 inches.

Complexion Black

Eyes Black; hair Black

Where born Clinton Co Ky

Occupation Laborer

ENLISTMENT.

When January 2 1865.

Where Paducah Ky

By whom Col Morgan; term 3 y'rs.

Remarks: Recruited at Smith Camp Jany 4 1865

Deserted

(383*g*) *Copyist.*

S | 13 H. Art'y. | U.S.C.T.

Robert Sutliff

Appears with rank of Pvt. on

Muster and Descriptive Roll of a Detachment of U. S. Vols. ~~forwarded~~ Organized

Leo. B. for the 13 Reg't U. S. Col'd H. Art'y. Roll dated

Camp Nelson June 23, 1865.

Where born Clinton Co. Ky.

Age 28 y'rs; occupation Laborer

When enlisted Jan. 2, 1865.

Where enlisted Paducah Ky.

For what period enlisted 3 years.

Eyes Blk; hair Blk

Complexion Blk; height 5 ft. 5 in.

When mustered in Jan 2, 1865.

Where mustered in Paducah, Ky

Bounty paid $ 100; due $ 100

Where credited 1st Dist. Ky.

Company to which assigned C

Remarks: Deserted Jan. 4/66 —
W Smithland, Ky.

Book mark:

(339) Wagner Copyist.

S | **13** H. Art'y. | **U.S.C.T.**

Robert Sutliff

Appears with rank of Pvt on

Muster and Descriptive Roll of a Detachment of U. S. Vols. forwarded

for the 13 Reg't U. S. Col'd H. Art'y. Roll dated

Paducah Ky, Jan 20, 1865.

Where born Clinton Co. Ky

Age 28 y'rs; occupation Laborer

When enlisted Jany 2, 1865.

Where enlisted Paducah Ky

For what period enlisted 3 years.

Eyes Black; hair Black

Complexion Black; height 5 ft. 5 in.

When mustered in Jany 2, 1865.

Where mustered in

Bounty paid $100; due $100

Where credited Bracken Co. 1st Dist of Ky

Company to which assigned B

Remarks:

Book mark:

Hammer

(339) *Copyist.*

S 13 H. Arty | **U.S.C.T.**

Robert Sutcliff

Sct., Co. B., 13 Reg't U. S. Col'd H. Arty.

Age_____**years.**

Appears on

Company Muster Roll*

for Enlistment to Feb 28, 1865.

Joined for duty and enrolled:

When Jan 2, 1865.

Where Paducah, Ky.

Period 3 years.

Mustered in:

When Jan 2, 1865.

Where Paducah, Ky.

Present or absent _____

Stoppage, $____ 100 for _____

Due Gov't, $____ 100 for _____

Valuation of horse, $____ 100

Valuation of horse equipments, $____ 100

Remarks: Deserted at Smithland, Ky, Jan. 4 '65.

***First current roll. No muster-in roll of this company on file.**

Book mark: _____

Falconer

(358*b*) *Copyist.*

Q / 13 Wisty U.S.C.T.

Peter Cuthliff

Cpl., Co. B, 13 Reg't U. S. Col'd Wisty

Appears on

Descriptive List of Deserters

dated March 31, 1865.

Deserted:

When June 4, 1865.

Where Southland Ky

Arrested:

When ....., 186 .

Where .....

Remarks: .....

Book mark: .....

Edward

(351) *Copyist.*

S | 13 H. Art'y. | U.S.C.T.

Norbert Shutliff

Pvt., Co. B, 13 Reg't U. S. Col'd H. Art'y.

Appears on **Co. Muster-out Roll,** dated Louisville, Ky., Nov. 18, 1865.

Muster-out to date ....., 186 .

Last paid to Nov. 1, 186 .

Clothing account:

Last settled ....., 186 ; drawn since $ 100

Due soldier $ ....100; due U. S. $ 100

Am't for cloth'g in kind or money adv'd $ 100

Due U. S. for arms, equipments, &c., $ 100

Bounty paid $ ....100; due $ 100

Remarks: Deserted Jan. 4'65, Smithland, Ky.

Book mark: .....

---

(361) Falconer

Copyist.

Sutcliffe, Robert

....., Co. ....., 13 Reg't U. S. C. H. Av.

1 **Enclosures.**

Bed Cards	**Final Statements**
Burial Records	Furloughs or L. of A
Certs. of Dis. for Discharge	**Med. Certificates**
C. M. Charges	**Med. Des. Lists**
Descriptive Lists	**Orders**
Discharge Certificates	Pris. of War Record
Enlistment Papers 1	Resignations

Other papers relating to—

Admission to Hosp'l	Furlough or L. of A
Casualty Sheet	**Med. Examination**
Confinement	**Misc. Information**
Contracts	**Pay or Clothing**
Death or Effects	**Personal Reports**
Desertion	**Rank**
Discharge from Hosp'l	**Transfer to Hosp'l**
Discharge from Service	**Transfer to V. R. C.**
Duty	**Transportation**

DECLARATION OF RECRUIT.

I, Robert Sutliff of Crittenden Co. Ky. desiring to volunteer as a soldier in the ARMY OF THE UNITED STATES, for the term of *Three Years*, DO DECLARE That I am 28 years and ..... months of age; that I have never been discharged from the United States service on account of disability or by sentence of a court-martial, or by order before the expiration of a term of enlistment; and I know of no impediment to my serving honestly and faithfully as a soldier for three years.

GIVEN at Paducah Ky

the 2nd day of January 1865

Witness: E R Brashear

his
Robert x Sutliff
mark

Rolls Co. Ky Vol

No. Fifty-five

Volunteered at Paducah Ky

Jany 2nd 1865

By Capt A Morgan

Recruiting officer

Consent of Parent or Guardian in case of a Minor, if a Free Man, or in the case of a Slave, of the Person to whom he owes Service:

I, ... DO CERTIFY, That I am

the .....

.....

that the said..... is..... years of age; and I do freely give my CONSENT to his volunteering as a SOLDIER in the Army of the United States, for the period of THREE YEARS, under the conditions of the laws of the United States.

GIVEN at .....

the ..... day of .....

Witness:

.....

.....

(A. G. O. No. 74 & 76.)

NOTE 1.—This blank will be used for enlistments of United States colored troops. They will be made out in duplicate in all cases—one to accompany the return of the superintendent (not the recruiting officer) to the Adjutant General, and one to accompany the accounts of the officer who pays bounty, &c.

NOTE 2.—An enlistment holds to service. A muster-in must, in all cases, precede payment of pay, bounty, pension, &c. A muster-in roll, must in all cases, be filed in the Adjutant General's Office as evidence of muster-in. The mustering officer, commissary, or assistant commissary of musters, as the case may be, will sound enlistments as having mustered the soldiers into the service of the United States before either of them is given to the disbursing officer.

UNITED STATES COLORED TROOPS ENLISTMENT.

STATE OF Kentucky

TOWN OF as credited to Crittenden Co Ky

I, Robert Sutliff born in Clinton Co.

in the State of Kentucky aged Twenty Eight years

and by occupation a Laborer Do HEREBY ACKNOWLEDGE to

have volunteered 2nd day of January 1865,

to serve as a **Soldier** in the **Army of the United States of America,** for the period of THREE YEARS, unless sooner discharged by proper authority: Do also agree to accept such bounty, pay, rations, and clothing, as are, or may be, established by law for the U. S. colored troops.

And I, Robert Sutliff of Crittenden Co do solemnly swear that I will bear true faith and allegiance to the **United States of America,** and that I will serve them honestly and faithfully against all their enemies or opposers whomsoever; and that I will observe and obey the orders of the President of the United States, and the orders of the officers appointed over me, according to the Rules and Articles of War.

Sworn and subscribed to, at Paducah Ky.
this 2nd day of Jany 1865
Before J. H. Morgan
Capt & Pro Mar 1st Dist of Ky

his
Robert x Sutliff
mark

I CERTIFY, ON HONOR, That I have carefully examined the above named Volunteer agreeably to the General Regulations of the Army, and that, in my opinion, he is free from all bodily defects and mental infirmity, which would in any way disqualify him from performing the duties of a soldier.

I M Beck

EXAMINING SURGEON.

I CERTIFY, ON HONOR, That I have minutely inspected the Volunteer, Robert Sutliff previously to his enlistment, and that he was entirely sober when enlisted; that, to the best of my judgment and belief, he is of lawful age; and that, in accepting him as duly qualified to perform the duties of an able-bodied soldier, I have strictly observed the regulations which govern the recruiting service. This soldier has Blue *eyes*, Black *hair*, Dark *complexion*, is 5 *feet* 5 *inches* high.

RECRUITING OFFICER OR AGENT.

Mustered into the United States Service 2nd day of Jany 1865.

Jno S Morgan
Capt Pro Mar
Mustering Officer.
1st Dist of Ky

Mustered into the service of the United States, for three years or during the war, from date of enlistment, in Company ..... of the ..... Regiment of U.S. Colored Volunteers, on the 2nd day of January, 1865, at Paducah Ky

Jno S Morgan
Capt & Pro Mar
1st Dist of Ky

1995

Sweeves. Samuel

Co L, 13 U.S. Col'd H. Art'y.

Private	Private

CARD NUMBERS.

1	55-19367	26	
2	5-5-19107	27	
3	55-25207	28	
4	5-5-25-3555	29	
5	5-5-19636	30	
6	5-5-25526	31	
7	9129520	32	
8		33	
9		34	
10		35	
11		36	
12		37	
13		38	
14		39	
15		40	
16		41	
17		42	
18		43	
19		44	
20		45	
21		46	
22		47	
23		48	
24		49	
25		50	

Book Mark:

See also 72" U.S.C.T.

E | 13 H. Art'y. | U.S.C.T.

Barnaby Sweeney

....., Co. L, 13 Reg't U.S. Col'd H. Art'y.

Appears on

Company Descriptive Book

of the organization named above.

DESCRIPTION.

Age 27 years; height 5 feet 9½ inches.

Complexion Blk

Eyes Blk; hair Blk

Where born S. Carolina

Occupation Sailor

ENLISTMENT.

When Dec 20, 1864.

Where Cleveland O

By whom Capt Tash; term 1 y'rs.

Remarks: Substitute

E H Rosecrans

(383*g*) **Copyist.**

L | 13 H. Art'y. | U.S.C.T.

Sgt. Samuel Stevens

Pvt., Co. L, 13 Reg't U. S. Col'd H. Art'y.

Age ..... years.

Appears on

Company Muster Roll*

for Feb June 30, 1865.

Joined for duty and enrolled:

When ....., 186 .

Where .....

Period 1 years

Mustered in:

When Dec 20, 1864.

Where Cleveland

Present or absent Present

Stoppage, $ 100 for .....

Due Gov't, $ 100 for .....

Valuation of horse, $ 100

Valuation of horse equipments, $ 100

Remarks: Stop for one haversack, one Canteen & Substitute

* First current roll. No muster-in roll of this company on file.

Book mark: .....

Leger

Copyright.

8 | 13 H. Art'y. | U.S.C.T.

Samuel Sweeves

Pri., Co. L, 13 Reg't U. S. Col'd H. Art'y.

Appears on

M. and D. Roll of Men Transferred

to the organization named above,

from Co B 7 2 US C Inf

Roll dated Camp Nelson Ky July 3, 186 5.

When enlisted ....., 186 .

Period for which enlisted ..... 1 ..... years.

When mustered in Dec 20, 186 2.

Present or absent Not stated

Company to which assigned .....

Remarks: Sub fm Hay Bush

Book mark : .....

J Allendent

(342) *Copyist.*

S | 13 H. Art'y. | U.S.C.T.

Samuel Stevens

Pvt., Co....., 13 Reg't U. S. Col'd H. Art'y.

Appears on

M. and D. Roll of Men Transferred

to the organization named above,

from 72 U S C I.

Roll dated July 3, 1865.

When enlisted ....., 186 .

Period for which enlisted 1 years.

When mustered in Dec 20, 1864.

Present or absent not stated

Company to which assigned L

Remarks:

Sub. for Alex Burke

Book mark :

J Uredmann

(342) *Copyist.*

S | 13 H. Art'y. | U.S.C.T.

Samuel Sweeney

Pvt., Co. L, 13 Reg't U. S. Col'd H. Art'y.

Appears on

Company Muster Roll

for July & Aug, 1865.

Present or absent Present

Stoppage, $ 100 for

Due Gov't, $ 100 for

Valuation of horse, $ 100

Valuation of horse equipments, $ 100

Remarks: Absent for one haversack & one canteen $1.63

NEXT BILL ON FILE MUSTER OUT.

Book mark:

Logan

(358) *Copyist.*

Pvt Vol Hosty U.S.C.T.

Pam Turner

Pvt, Co L, 13 Reg't U. S. Col'd Hosty

Appears on

Descriptive List of Deserters

dated Sept 30, 1865.

Deserted:

When Sept 8, 1865.

Where Crab Orchard Ky.

Arrested:

When ....., 186 .

Where .....

Remarks: .....

Book mark: .....

Pvt Hosty

(351) Copyist.

13 H. Art'y. | U.S.C.T.

Samuel Swan

Pvt, Co. L, 13 Reg't U. S. Col'd H. Art'y.

Appears on **Co. Muster-out Roll,** dated Louisville Ky, Nov 18, 1865.

Muster-out to date ....., 186 .

Last paid to June 30, 1865.

Clothing account:

Last settled ....., 186 ; drawn since $.....100

Due soldier $.....100; due U. S. $.....100

Am't for cloth'g in kind or money adv'd $.....100

Due U. S. for arms, equipments, &c., $.....100

Bounty paid $.....100; due $.....100

Remarks: Deserted Jan 8/65 from Camp Nelson Ky

Book mark: .....

(861) *Copyist.*

1996

Swindler Washington

Co....., 13 U.S.Col'd H. Art'y.

Private

CARD NUMBERS.

1 55-16175	26
2	27
3	28
4	29
5	30
6	31
7	32
8	33
9	34
10	35
11	36
12	37
13	38
14	39
15	40
16	41
17	42
18	43
19	44
20	45
21	46
22	47
23	48
24	49
25	50

Book Mark:.....

See also.....

S | 13 H. Art'y. | U.S.C.T.

Washington Swindler

Appears with rank of Pvt on

Muster and Descriptive Roll of a Detachment of U. S. Vols. forwarded

for the 13 Reg't U. S. Col'd H. Art'y. Roll dated

Louisville Ky, Apl 7, 186 5.

Where born Shelby Co Ky

Age 50 y'rs; occupation Farmer

When enlisted Apl 7, 186 5.

Where enlisted Louisville Ky

For what period enlisted 3 years.

Eyes Blk; hair Blk

Complexion Blk; height 5 ft. 3½ in.

When mustered in Apl 7, 186 5.

Where mustered in Louisville Ky

Bounty paid $ 100; due $ 100

Where credited Shelby Co Ky

Company to which assigned

Remarks: Enlisted by order Sec War under Genl Thomas order No 20. Name not taken up on Co. rolls of Regt.

Book mark:

Rose

(339) Copyist.

Next Summons 1997 ~~1997~~ 1991 d.t.d.

Sydnor, Allen

Co a, 13 U.S.Col'd H.Art'y.

Private	Private

CARD NUMBERS.

1	[illegible]	26	
2	[illegible]	27	
3	[illegible]	28	
4	[illegible]	29	
5	[illegible]	30	
6	[illegible]	31	
7	[illegible]	32	
8	9128051	33	
9	4313599[illegible]	34	
10		35	
11		36	
12		37	
13		38	
14		39	
15		40	
16		41	
17		42	
18		43	
19		44	
20		45	
21		46	
22		47	
23		48	
24		49	
25		50	

Book Mark:

See also

S. C52438-2 Amd.

S-1112222-P.O. 486
S2343832 P.O. Rel.
S2978714 and No
S3020774 Amd No 2

S. Allen Clemens 45,

I | 13 H. Art'y. | U.S.C.T.

Allen Snyder

....., Co. A, 13 Reg't U.S. Col'd H. Art'y.

Appears on

Company Descriptive Book

of the organization named above.

DESCRIPTION.

Age 24 years; height 5 feet 9½ inches.

Complexion Brown

Eyes Brown; hair Black

Where born Logan Co Kentucky

Occupation Farmer

ENLISTMENT.

When Oct 27, 1864.

Where Bowling Green

By whom Capt Wilson; term 3 y'rs.

Remarks:

Deserted

(383*a*) **Copyist.**

Co | 13 N.A. | U.S.C.T.

Allen Lydnor

Appears with rank of Pvt on

Muster and Descriptive Roll

of a Detachment of U.S. Colored recruits forward for 13 Regt U.S. colored N. Lity. Roll dated Bowling Green, Ky., Oct 31, 1864.

Where born Logan Co Ky

Age 24 years; occupation Farmer

When enlisted Oct 17, 1864.

Where enlisted B. Green Ky

For what period enlisted 3 years.

Eyes brown; hair blk

Complexion brown; height 5 ft. 9½ in.

When mustered in ....., 186 .

Where mustered in .....

Bounty paid $ 100; due $ 100

Clothing account:

Last settled ....., 186 ; drawn since $ 18 30/100

Date of first muster Oct 27, 1864.

Company to which assigned .....

Remarks: New recruit

Logan Co. owed Lunin to David Lydnor

Book mark : .....

G. L. Wm

(356m) Copyist.

S | **13 H. Art'y.** | **U.S.C.T.**

Allen Sydenor

Pvt, Co. A, 13 Reg't U. S. Col'd H. Art'y.

Age ..... years.

Appears on

Company Muster Roll*

for Nov. & Dec. 64, 186 4.

Joined for duty and enrolled:

When Oct 27, 186 4.

Where Bowling Green Ky

Period 3 years

Mustered in:

When Oct. 27, 186 4.

Where Bowling Green Ky.

Present or absent Present

Stoppage, $.....100 for .....

Due Gov't, $.....100 for .....

Valuation of horse, $.....100

Valuation of horse equipments, $.....100

Remarks: .....

* First current roll. No muster-in roll of this company on file.

Book mark: .....

(3586) W. G. Hughes
Copyist.

A | 13 H. Art'y. | U.S.C.T.

Allen Sydnor

Priv., Co. A, 13 Reg't U. S. Col'd H. Art'y.

Appears on

Company Muster Roll

for Jan & Feb, 186 5.

Present or absent Present

Stoppage, $ 100 for

Due Gov't, $ 100 for

Valuation of horse, $ 100

Valuation of horse equipments, $ 100

Remarks: Due $40 first installment of Gov Bounty.

Book mark:

W. J. Hughes

(358) Copyist.

S | **13** H. Art'y. | **U.S.C.T.**

Allen Sydnor

Pvt, Co. A, 13 Reg't U. S. Col'd H. Art'y.

Appears on

Company Muster Roll

for Dec & Jan, 186 5.

Present or absent Present

Stoppage, $ 100 for

Due Gov't, $ 100 for

Valuation of horse, $ 100

Valuation of horse equipments, $ 100

Remarks:

Book mark:

W. T. Hughes

Copyist.

S | 13 H. Art'y. | U.S.C.T.

Allen Sydnor

Pvt., Co. A, 13 Reg't U. S. Col'd H. Art'y.

Appears on

Company Muster Roll

for May & June, 186 5.

Present or absent Present

Stoppage, $ 100 for

Due Gov't, $ 100 for

Valuation of horse, $ 100

Valuation of horse equipments, $ 100

Remarks: 1st Installment Bounty due

FROM SECOND AUDITOR'S ROLL.

Book mark:

W. T. Hughes

Copyist.

(358)

8 | 13 H. Art'y. | U.S.C.T.

Allen Sidney

Appears with rank of Priv. on

Muster and Descriptive Roll of a Detachment of U. S. Vols. ~~forwarded~~ Organized as

for the 13 Reg't U. S. Col'd H. Art'y. Roll dated

Camp Nelson Ky June 21, 1865.

Where born Logan Co. Ky.

Age 24 y'rs; occupation Farmer

When enlisted Oct. 21, 1864.

Where enlisted Glasgow Ky

For what period enlisted 3 years.

Eyes Brown; hair Blk

Complexion Brown; height 5 ft. 9½ in.

When mustered in Oct. 21, 1864.

Where mustered in Glasgow Ky.

Bounty paid $ 100; due $ 100

Where credited

Company to which assigned A.

Remarks:

Filed with Allen Sydnor.

Book mark:

Maynard
Copyist.

S | 13 H. Art'y. | U.S.C.T.

Allen Sydnor

Pvt., Co. A, 13 Reg't U. S. Col'd H. Art'y.

Appears on

Company Muster Roll

for July & Aug, 186 5.

Present or absent Present

Stoppage, $ 100 for

Due Gov't, $ 100 for

Valuation of horse, $ 100

Valuation of horse equipments, $ 100

Remarks:

Due 1st Installment
Govt Bounty $100

NOTHING ELSE ON FILE MUSTERED OUT.

Book mark:

W. J. Hughes

(358) Copyist.

S | 13 H. Art'y. | U.S.C.T.

Allen Sydner

Pvt., Co. A, 13 Reg't U. S. Col'd H. Art'y.

Appears on **Co. Muster-out Roll,** dated Louisville Ky, Nov 18, 186 5.

Muster-out to date Nov 18, 186 5.

Last paid to June 30, 186 5.

Clothing account:

Last settled ....., 186 ; drawn since $ 100

Due soldier $ ..... 100; due U. S. $ 63 85/100

Am't for cloth'g in kind or money adv'd $ 100

Due U. S. for arms, equipments, &c., $ 100

Bounty paid $ 100 00/100; due $ 100

Remarks: .....

.....

.....

.....

.....

.....

Book mark: .....

W. J. Hughes

(361) *Copyist.*

Sydnor Allen

_____, Co. _____, _____ Reg't 2. U. S. C. I.

2 **Enclosures.**

Bed Cards	Final Statements
Burial Records	Furloughs or L. of A.
Certs. of Dis. for Discharge	Med. Certificates
C. M. Charges	Med. Des. Lists
Descriptive Lists	Orders
Discharge Certificates	Pris. of War Record
Enlistment Papers 2	Resignations

Other papers relating to—

Admission to Hosp'l	Furlough or L. of A.
Casualty Sheet	Med. Examination
Confinement	Misc. Information
Contracts	Pay or Clothing
Death or Effects	Personal Reports
Desertion	Rank
Discharge from Hosp'l	Transfer to Hosp'l
Discharge from Service	Transfer to V. R. C.
Duty	Transportation

DECLARATION OF RECRUIT.

I, Allen Sydnor ..... desiring to volunteer as a soldier in the ARMY OF THE UNITED STATES, for the term of *Three Years*, DO DECLARE That I am 21 years and ..... months of age; that I have never been discharged from the United States service on account of disability or by sentence of a court-martial, or by order before the expiration of a term of enlistment; and I know of no impediment to my serving honestly and faithfully as a soldier for three years.

GIVEN at Bowling Green Kentuck

the 26 day of Oct 1864

Witness: N G Hogan Capt & Com Dist Ky and Mustering officer

his
Allen + Sydnor
mark

Allen Sydnor No. 8
Volunteered at Bowling Green Ky
October 26 1864
By N G Hogan
Captain 100th Regt 3d Ky Cav

Allen Sydnor 1st Sergt Co. A 100th Regt Ky Mtd Inf

Consent of Parent or Guardian in case of a Minor, if a Free Man, or in the case of a Slave, of the Person to whom he owes Service:

I, ... DO CERTIFY, That I am

the .....

.....

that the said ..... is .... years of age; and I

do freely give my CONSENT to his volunteering as a SOLDIER in the Army of the United States, for the period of THREE YEARS, under the conditions of the laws of the United States.

GIVEN at .....

the ..... day of .....

Witness:

.....

.....

(A. G. O. No. 74 & 76.)

NOTE 1.—This blank will be used for enlistments of United States colored troops. They will be made out in duplicate in all cases—one to accompany the recruiting return of the superintendent (not the recruiting officer) to the Adjutant General, and one to accompany the accounts of the officer who pays bounty, &c.

NOTE 2.—An enlistment holds to service. A muster-in must, in all cases, precede pay, bounty, pension, &c. A muster-in roll, must in all cases, be filed in the Adjutant General's Office as evidence of muster-in. The mustering officer, commissary, or assistant commissary of musters, as the case may be, will countersign both enlistments as having mustered the soldiers into the service of the United States before either of them is given to the disbursing officer.

UNITED STATES COLORED TROOPS ENLISTMENT.

STATE OF Kentucky TOWN OF Paducah Ky

I, Allen Sydnor born in Logan Co

in the State of Kentucky aged Twenty years

and by occupation a Farmer Do HEREBY ACKNOWLEDGE to

have volunteered Twenty Second day of Oct 1864,

to serve as a **Soldier** in the **Army of the United States of America,** for the period of THREE YEARS, unless sooner discharged by proper authority: Do also agree to accept such bounty, pay, rations, and clothing, as are, or may be, established by law for the U. S. colored troops.

And I, Allen Sydnor

do solemnly swear that I will bear true faith and allegiance to the **United States of America,** and that I will serve them honestly and faithfully against all their enemies or opposers whomsoever; and that I will observe and obey the orders of the President of the United States, and the orders of the officers appointed over me, according to the Rules and Articles of War.

Sworn and subscribed to, at Paducah Ky

this 27 day of Oct 1864

Before A G Hobson Capt 1st Pio Mus 3d Dist Ky

Allen Sydnor

mark

I CERTIFY, ON HONOR, That I have carefully examined the above named Volunteer agreeably to the General Regulations of the Army, and that, in my opinion, he is free from all bodily defects and mental infirmity, which would in any way disqualify him from performing the duties of a soldier.

W R Bailey

EXAMINING SURGEON.

I CERTIFY, ON HONOR, That I have minutely inspected the Volunteer, Allen Sydnor previously to his enlistment, and that he was entirely sober when enlisted; that, to the best of my judgment and belief, he is of lawful age; and that, in accepting him as duly qualified to perform the duties of an able-bodied soldier, I have strictly observed the regulations which govern the recruiting service. This soldier has Brown eyes, Black hair, Brown complexion, is five 5 feet 7½ inches high.

A G Hobson Capt 1st Pio Mus 3d Dist Ky

RECRUITING OFFICER OR AGENT.

Mustered into the United States Service 27 day of Oct 1864

A G Hobson Capt 1st Pio Mus

3d Dist Ky

Mustering Officer.

Mustered into the service of the United States, for three years or during the war, from date of enlistment, in Company ..... Regiment of ..... Volunteers, on the ..... day of ..... 186 , at .....

DECLARATION OF RECRUIT.

I, Allen Sydnor desiring to volunteer as a soldier in the ARMY OF THE UNITED STATES, for the term of *Three Years*, DO DECLARE That I am 24 years and ..... months of age; that I have never been discharged from the United States service on account of disability or by sentence of a court-martial, or by order before the expiration of a term of enlistment; and I know of no impediment to my serving honestly and faithfully as a soldier for three years.

GIVEN at Bowling Green, Ky

the 27 day of October 1864

Witness:

A. G. Hobson Capt. & Pro. Mar.
By Dist. Ky & Reitg. Office

Allen Sydnor
Mark

Allen Sydnor

No. 1[illegible]

Volunteered at [illegible]

By [illegible]

Jul 17 1871

Consent of Parent or Guardian in case of a Minor, if a Free Man, or in the case of a Slave, of the Person to whom he owes Service:

I, ... DO CERTIFY, That I am the .....

.....

that the said ..... is ..... years of age; and I do freely give my CONSENT to his volunteering as a SOLDIER in the Army of the United States, for the period of THREE YEARS, under the conditions of the laws of the United States.

GIVEN at .....

the ..... day of .....

Witness:

....

(A. G. O. No. 74 & 76.)

NOTE 1.—This blank will be used for enlistments of United States colored troops. They will be made out in duplicate in all cases—one to accompany the recruiting return of the superintendent (not the recruiting officer) to the Adjutant General, and one to accompany the accounts of the officer who pays bounty, &c.

NOTE 2.—An enlistment holds to service. A muster-in must, in all cases, precede payment of pay, bounty, pension, &c. A muster-in roll, must in all cases, be filed in the Adjutant General's Office as evidence of muster-in. The mustering officer, commissary, or assistant commissary of musters, as the case may be, will countersign both enlistments as having mustered the soldiers into the service of the United States before either of them is given to the disbursing officer.

UNITED STATES COLORED TROOPS ENLISTMENT.

STATE OF Kentucky TOWN OF Bowling Green

I, Allen Bynum born in Logan Co.

in the State of Kentucky aged Twenty four years

and by occupation a Farmer Do HEREBY ACKNOWLEDGE to

have volunteered 2nd day of October 1864

to serve as a **Soldier** in the **Army of the United States of America,** for the period of THREE YEARS, unless sooner discharged by proper authority: Do also agree to accept such bounty, pay, rations, and clothing, as are, or may be, established by law for the U. S. colored troops.

And I, Allen Bynum do solemnly swear that I will bear true faith and allegiance to the **United States of America,** and that I will serve them honestly and faithfully against all their enemies or opposers whomsoever; and that I will observe and obey the orders of the President of the United States, and the orders of the officers appointed over me, according to the Rules and Articles of War.

Sworn and subscribed to, at Bowling Green

this 2nd day of Oct. 1864

Before A. G. Hobson Capt. 1st Pro. Mus. 3d Dist. Ky Army

his
Allen X Bynum
mark

I CERTIFY, ON HONOR, That I have carefully examined the above named Volunteer agreeably to the General Regulations of the Army, and that, in my opinion, he is free from all bodily defects and mental infirmity, which would in any way disqualify him from performing the duties of a soldier.

J. R. Bailey

EXAMINING SURGEON.

I CERTIFY, ON HONOR, That I have minutely inspected the Volunteer Allen Bynum previously to his enlistment, and that he was entirely sober when enlisted; that, to the best of my judgment and belief, he is of lawful age; and that, in accepting him as duly qualified to perform the duties of an able-bodied soldier, I have strictly observed the regulations which govern the recruiting service. This soldier has Black eyes, Black hair, Brown complexion, is 5 feet 9½ inches high.

A. G. Hobson Capt 1st Pro. Mus. 3d Dist. Ky Army

RECRUITING OFFICER OR AGENT.

Mustered into the United States Service 2nd day of Oct. 1864

A. G. Hobson Capt. 1st Pro. Mus. 3d Dist. Ky Army

Mustering Officer.

Mustered into the service of the United States, for three years or during the war, from date of enlistment, in Company ..... Regiment of ..... Volunteers, on the ..... day of ....., 186 , at .....

1997-a

Fabun Simon

Co. ----, 13 US Cold X Artz

Private	Private

CARD NUMBERS.

1	26860338	26	
2		27	
3		28	
4		29	
5		30	
6		31	
7		32	
8		33	
9		34	
10		35	
11		36	
12		37	
13		38	
14		39	
15		40	
16		41	
17		42	
18		43	
19		44	
20		45	
21		46	
22		47	
23		48	
24		49	
25		50	

Number of personal papers herein 2.

Book Mark:

See also

C I 13 H Cav U.S.C.T.

Simon Tatum

Appears with rank of Pvt. on

Muster in and Descriptive Roll of a Detachment of Drafted Men and Substitutes forwarded

for the 13 Reg't U.S.C.H.Cav. Roll dated

Camp Ill. Aug. 12, 1865.

Where born Ill.

Age 20 y'rs; occupation Laborer

Drafted and mustered in:

When Aug. 8, 186 .

Where Camp Ill.

Period 1 years.

Eyes Hazel; hair Black

Complexion Black; height 5 ft. 8½ in.

Paid bounty and advance pay, $ 100

Bounty due $ 100

Where credited Town of R. 3, S.D. 129 Jefferson Co. Eleventh Dist. Ill.

Company to which assigned

Remarks: Substitute for Calvin Brown, Drafted Mar. 25.

Not taken up on Roll of Sept.

Book mark:

(340) J. Parkin
Copyist.

Taburn, Simon

....., Co. ....., Reg't U. S. C. T.

2 **Enclosures.**

Bed Cards	Final Statements .....
Burial Records	Furloughs or L. of A. .....
Certs. of Dis. for Discharge	Med. Certificates .....
C. M. Charges	Med. Des. Lists .....
Descriptive Lists	Orders .....
Discharge Certificates	Pris. of War Record .....
Enlistment Papers 2	Resignations .....

Other papers relating to—

Admission to Hosp'l	Furlough or L. of A. .....
Casualty Sheet	Med. Examination .....
Confinement	Misc. Information .....
Contracts	Pay or Clothing .....
Death or Effects	Personal Reports .....
Desertion	Rank .....
Discharge from Hosp'l	Transfer to Hosp'l .....
Discharge from Service	Transfer to V. R. C. .....
Duty	Transportation .....
.....	.....

DECLARATION OF SUBSTITUTE.

I, Simon Tahaan, desiring to ENLIST
in the **Army of the United States,** for ~~THREE~~ one YEARS, ***Do declare,*** That I am
Twenty years and ..... months of age; that I have
never been discharged from the United States service on account of disability or by sentence of
a court martial; and I know of no impediment to my serving honestly and faithfully as a soldier
for ~~three~~ one years.

GIVEN at Olney Ills
the 8 day of April

WITNESS:

James Wright

Simon his x Tabaan
mark

No. 2810

Simon Tahaan

Enlisted at Olney Ills

As Substitute for

On the 8 day of April, 1864,

By

Capt & Recruiting Officer

Wm P Richardson

E M Kennie Surgeon

Board of Enrollment,

11th Dist. of Ills

(No. 39.)

SUBSTITUTE

VOLUNTEER ENLISTMENT.

STATE OF Ills TOWN OF Olney

I, Simon Taburn, born in the State of Ills, aged Twenty years, and by occupation a Farmer, Do HEREBY ACKNOWLEDGE to have agreed with Calvin Brown, Esq., of T4 R3 Jefferson Co 11 Dist Ills to become his **SUBSTITUTE** in the Military Service, for a sufficient consideration paid and delivered to me, on the Eight day of April, 1865; and having thus agreed with said Calvin Brown, I DO HEREBY ACKNOWLEDGE to have enlisted this Eighth day of April, 1865, to serve as a ***Soldier*** in the **Army of the United States of America,** for the period of ~~THREE~~ *YEARS*, unless sooner discharged by proper authority. I do also agree to accept such bounty, pay, rations, and clothing as are, or may be, established by law for soldiers. And I do solemnly swear that I will bear true and faithful allegiance to the ***United States of America;*** that I will serve them honestly and faithfully against all their enemies or opposers whomsoever; and that I will observe and obey the orders of the President of the United States and the orders of the officers appointed over me, according to the Rules and Articles of War.

SWORN and subscribed to, at Olney
this 8 of April, 1865,
BEFORE J. C. Scott
Capt Pro mar 11 Dist Ills

Simon his × mark Taburn

We certify, on honor, That we have carefully examined the above-named Volunteer Substitute agreeably to the Regulations, and that, in our opinion, he is free from all bodily defects and mental infirmity which would in any way disqualify him from performing the duties of a soldier; that he was entirely sober when enlisted; that he is of lawful age, (not under 18 years;) and that, in accepting him as duly qualified to perform the duties of an able-bodied soldier, and as a Substitute in lieu of Calvin Brown, drafted in T.4 R.3 Jefferson Co Ills March 25, 1865, we have strictly observed the Regulations which govern in such cases. This soldier has Blk eyes, Blk hair, Blk complexion; is 5 feet 8½ inches high.

J. C. Scott
Capt & A.P.M. *Provost Marshal.*

W. B. Archer
Commissioner of Board.

G. W. Hazzard
Surgeon of Board.

Board of Enrollment of 11th *Dist. of* Illinois

DECLARATION OF SUBSTITUTE.

I, Simon Taburn, desiring to ENLIST in the **Army of the United States,** for ~~THREE~~ one YEAR~~S~~, ***Do declare,*** That I am Twenty years and ..... months of age; that I have never been discharged from the United States service on account of disability or by sentence of a court martial; and I know of no impediment to my serving honestly and faithfully as a soldier for ~~three~~ one years.

GIVEN at Olney Ills

the 8 day of April

WITNESS:

James Wright

Simon his x Taburn
mark

I

No. 2,510

Simon Taburn

Enlisted at Olney Ills

As Substitute for

Jackson Brown

On the 8 day of April, 1865,

By

Capt. Goldsmith

Mustering Officer.

E. M. Haynie Surgeon

Board of Enrollment,

11 Dist. of Ills

(No. 39.)

SUBSTITUTE

VOLUNTEER ENLISTMENT.

STATE OF Ills TOWN OF Olney

I, Simon Taburn, born in the State of Illinois, aged Twenty years, and by occupation a Farmer, Do HEREBY ACKNOWLEDGE to have agreed with Calvin Brown, Esq., of T 4 R 3 Jefferson Co 11th Dist Ills to become his **SUBSTITUTE** in the Military Service, for a sufficient consideration paid and delivered to me, on the Eighth day of April, 186 4; and having thus agreed with said Calvin Brown, I DO HEREBY ACKNOWLEDGE to have enlisted this Eighth day of April, 186 4 to serve as a ***Soldier*** in the **Army of the United States of America,** for the period of ~~THREE~~ *YEARS*, unless sooner discharged by proper authority. I do also agree to accept such bounty, pay, rations, and clothing as are, or may be, established by law for soldiers. And I do solemnly swear that I will bear true and faithful allegiance to the ***United States of America;*** that I will serve them honestly and faithfully against all their enemies or opposers whomsoever; and that I will observe and obey the orders of the President of the United States and the orders of the officers appointed over me, according to the Rules and Articles of War.

SWORN and subscribed to, at Olney
this 8 of April, 1864,
BEFORE J. C. Soon
Capt & Pro Mar 11 Dist Ills

his
Simon + Taburn
mark

We certify, on honor, That we have carefully examined the above-named Volunteer Substitute agreeably to the Regulations, and that, in our opinion, he is free from all bodily defects and mental infirmity which would in any way disqualify him from performing the duties of a soldier; that he was entirely sober when enlisted; that he is of lawful age, (not under 18 years;) and that, in accepting him as duly qualified to perform the duties of an able-bodied soldier, and as a Substitute in lieu of Calvin Brown, drafted in T 4 R 3 Jefferson Co Ills March 23, 186 4, we have strictly observed the Regulations which govern in such cases. This soldier has Blk eyes, Blk hair, Blk complexion; is 5 feet 8 1/2 inches high.

J. C. Soon
Capt & Pro Mar
Provost Marshal.

W. B. Archer
Commissioner of Board.

G W Hazzard
Surgeon of Board.

Board of Enrollment of 11th *Dist. of* Illinois

1997-b

Previous numbers - 1997-a, b, c.

Tabum Henry

Co. ----, 13 U.S. Colrd H. Artly.

Private	Private

CARD NUMBERS.

1	268603344	26	
2		27	
3		28	
4		29	
5		30	
6		31	
7		32	
8		33	
9		34	
10		35	
11		36	
12		37	
13		38	
14		39	
15		40	
16		41	
17		42	
18		43	
19		44	
20		45	
21		46	
22		47	
23		48	
24		49	
25		50	

Number of personal papers herein 2.

Book Mark :

See also

I 13-Illy U.S.C.T.

Henry Tabum

Appears with rank of ..... on

Muster and Descriptive Roll of a Detachment of Drafted Men and Substitutes forwarded

for the 13" Reg't U.S.C.Hvy. Roll dated

Camp Ill. Apr. 17, 1865.

Where born Miss.

Age 24 y'rs; occupation Laborer.

Drafted and mustered in:

When April 12, 186 .

Where Camp Ill.

Period 1 years.

Eyes blk, hair blk

Complexion blk; height 6 ft. 2 in.

Paid bounty and advance pay, $ 100

Bounty due $ 100

Where credited Sub. Dist. 1st. Town 4. R 4 Jefferson Co Eleventh Dist Ill.

Company to which assigned .....

Remarks: Substitute for Samuel I Brick Draft March 25th

not taken up on the rolls of Regt.

Book mark: .....

Rankin

(340) *Copyist.*

Jabour, Henry

....., Co. ....., ... Reg't U. S. C. T.

2 **Enclosures.**

Bed Cards	Final Statements .....
Burial Records	Furloughs or L. of A. .....
Certs. of Dis. for Discharge	Med. Certificates .....
C. M. Charges	Med. Des. Lists .....
Descriptive Lists	Orders .....
Discharge Certificates	Pris. of War Record .....
Enlistment Papers 2	Resignations .....

Other papers relating to—

Admission to Hosp'l	Furlough or L. of A. .....
Casualty Sheet	Med. Examination .....
Confinement	Misc. Information .....
Contracts	Pay or Clothing .....
Death or Effects	Personal Reports .....
Desertion	Rank .....
Discharge from Hosp'l	Transfer to Hosp'l .....
Discharge from Service	Transfer to V. R. C. .....
Duty	Transportation .....
.....	.....

DECLARATION OF SUBSTITUTE.

I, Henry Jabour, desiring to ENLIST in the **Army of the United States,** for ~~THREE~~ one YEAR, ***Do declare,*** That I am 24 years and _____ months of age; that I have never been discharged from the United States service on account of disability or by sentence of a court martial; and I know of no impediment to my serving honestly and faithfully as a soldier for three years.

GIVEN at Olney Illinois

the 12th day of April 1865

WITNESS:

James Wright

Henry his x Jabours
mark

No. 3113 Jabour

Henry Jabour

Enlisted at Olney Ills,

As Substitute for

Samuel F. Crain

On the 12th day of April, 1865.

By

Capt. G. C. Scott Provost Marshal

4th District Crawford

Co. Illinois Enrolling

Board of Enrollment,

4th Dist. of Ills.

(No. 39.)

SUBSTITUTE

VOLUNTEER ENLISTMENT.

STATE OF Illinois TOWN OF Olney

I, Henry Jabour, born in the State of Miss, aged Twenty four years, and by occupation a Farmer, Do HEREBY ACKNOWLEDGE to have agreed with Samuel J. Orick, Esq., of. Town 4 Range 4 Jefferson County 11th Dist. Illinois to become his **SUBSTITUTE** in the Military Service, for a sufficient consideration paid and delivered to me, on the Twelfth day of April, 1865; and having thus agreed with said Samuel J. Orick, I DO HEREBY ACKNOWLEDGE to have enlisted this 12th day of April, 1865, to serve as a ***Soldier*** in the **Army of the United States of America,** for the period of ~~THREE~~ *YEARS*, unless sooner discharged by proper authority. I do also agree to accept such bounty, pay, rations, and clothing as are, or may be, established by law for soldiers. And I do solemnly swear that I will bear true and faithful allegiance to the ***United States of America;*** that I will serve them honestly and faithfully against all their enemies or opposers whomsoever; and that I will observe and obey the orders of the President of the United States and the orders of the officers appointed over me, according to the Rules and Articles of War.

SWORN and subscribed to, at Olney Ills.
this 12th of April, 1865,
BEFORE G. C. Scott
Capt & Pro. Mar. 11 Dist. Ills.

Henry his x Jabour
mark

We certify, on honor, That we have carefully examined the above-named Volunteer Substitute agreeably to the Regulations, and that, in our opinion, he is free from all bodily defects and mental infirmity which would in any way disqualify him from performing the duties of a soldier; that he was entirely sober when enlisted; that he is of lawful age, (not under 18 years;) and that, in accepting him as duly qualified to perform the duties of an able-bodied soldier, and as a Substitute in lieu of Samuel J. Orick, drafted in T 4 R 4 Jefferson Co. Ills, March 25th, 1865, we have strictly observed the Regulations which govern in such cases. This soldier has Blk eyes, Blk hair, Blk complexion; is 6 feet 4 inches high.

G. C. Scott
Capt & *Provost Marshal.*

W. B. Archer
Commissioner of Board.

D. W. Haymi
Surgeon of Board.

Board of Enrollment of 11th *Dist. of* Illinois

DECLARATION OF SUBSTITUTE.

I, Henry Sabour, desiring to ENLIST in the **Army of the United States,** for ~~THREE~~ one YEAR$, ***Do declare,*** That I am 24 years and _____ months of age; that I have never been discharged from the United States service on account of disability or by sentence of a court martial; and I know of no impediment to my serving honestly and faithfully as a soldier for ~~three~~ one years.

GIVEN at Olney Illinois

the 12th day of April 1865

WITNESS:

James Wright

Henry his x Sabour mark

No. 313

Henry Sabour

Enlisted at Olney Illinois,

As Substitute for

Samuel G. Brick

On the 12th day of April, 1865,

By

Capt. J. C. Scott Provost

Mo. Sharpshooters

Co. "C" Cypress Legt

Board of Enrollment,

11th Dist. of Ill.

Olney,

(No. 39.)

SUBSTITUTE

VOLUNTEER ENLISTMENT.

STATE OF Illinois TOWN OF Olney

I, Henry Sabour, born in the State of Miss, aged Twenty four years, and by occupation a Farmer, DO HEREBY ACKNOWLEDGE to have agreed with Samuel G. Orick, Esq., of Town 4 Range 4 Jefferson County 11th Dist. Illinois to become his **SUBSTITUTE** in the Military Service, for a sufficient consideration paid and delivered to me, on the 12th day of April, 1865; and having thus agreed with said Samuel G. Orick, I DO HEREBY ACKNOWLEDGE to have enlisted this 12th day of April, 1865, to serve as a ***Soldier*** in the **Army of the United States of America,** for the period of ~~THREE~~ *ONE YEAR*, unless sooner discharged by proper authority. I do also agree to accept such bounty, pay, rations, and clothing as are, or may be, established by law for soldiers. And I do solemnly swear that I will bear true and faithful allegiance to the ***United States of America;*** that I will serve them honestly and faithfully against all their enemies or opposers whomsoever; and that I will observe and obey the orders of the President of the United States and the orders of the officers appointed over me, according to the Rules and Articles of War.

SWORN and subscribed to, at Olney Ills.
this 12th of April, 1865,
BEFORE J. C. Scott
Capt & Pro Mar 11th Dist. Ills.

Henry his ✕ Sabours mark

We certify, on honor, That we have carefully examined the above-named Volunteer Substitute agreeably to the Regulations, and that, in our opinion, he is free from all bodily defects and mental infirmity which would in any way disqualify him from performing the duties of a soldier; that he was entirely sober when enlisted; that he is of lawful age, (not under 18 years;) and that, in accepting him as duly qualified to perform the duties of an able-bodied soldier, and as a Substitute in lieu of Samuel G. Orick, drafted in T4 R4 Jefferson Co. Ills. March 25th, 1865, we have strictly observed the Regulations which govern in such cases. This soldier has Blk eyes, Blk hair, Blk complexion; is 6 feet 2 inches high.

J. C. Scott
Capt & Provost Marshal.

W. B. Archer
Commissioner of Board.

G. W. Haynie
Surgeon of Board.

Board of Enrollment of 11th Dist. of Illinois

✓ 197-C

Talbott, Samuel

Co. —, 13 U. S. Col'd H. Art'y.

Private | Private

CARD NUMBERS.

1	43155033	20	
2		21	
3		22	
4		23	
5		24	
6		25	
7		26	
8		27	
9		28	
10		29	
11		30	
12		31	
13		32	
14		33	
15		34	
16		35	
17		36	
18		37	
19		38	

Number of medical cards herein 0

Number of personal papers herein 0

✓

BOOK MARK

✓

See also

M. S. C. T.

Lemuel Talbott,

Appears with rank of Pvt on

Muster and Descriptive Roll

of a Detachment of U. S. Col'd Recruits

mustered by Capt. J. H. Smith,

for the 13 Reg't, U. S. Col'd Inf'y (Hy) Roll dated

Louisville Ky, Mar. 6, 1865.

Where born Jefferson Co. Kentucky.

Age 18 years; occupation Farmer.

When enlisted Mar. 6, 1865.

Where enlisted Louisville Ky

For what period enlisted 3 years.

Eyes Blk; hair Blk

Complexion Blk.; height 5 ft. 6 in.

When mustered in Mar. 6, 1865.

Where mustered in Louisville Ky

Bounty paid $ 100; due $ 100

Clothing account:

Last settled ——, 186 ; drawn since $ 100

Date of first muster ——, 186 .

Company to which assigned ——

Remarks: Invalid Corps.
Credited to Louisville
Jefferson Co. 5 Dist. Ky

Book mark : ——

T. Donohue,

(356m) Copyist.

Previous numbers
197 a b c 1997

Sandy Ferris

Co a., 13 U.S.Col'd H. Art'y.

Private | Private

CARD NUMBERS.

1	5-5-15-5-82	26	
2	5-5-165-16	27	
3	5-5-19833	28	
4	5-5-19966	29	
5	5-5-20102	30	
6	5-5-20255-	31	
7	5-5-20422	32	
8	5-5-2056 6	33	
9	91280 3-2	34	
10	43154155	35	
11		36	
12		37	
13		38	
14		39	
15		40	
16		41	
17		42	
18		43	
19		44	
20		45	
21		46	
22		47	
23		48	
24		49	
25		50	

Book Mark:

See also

D. 2376886 pour mon

D. Emmanuel Lévy

13 H. Art'y. | U.S.C.T.

Lewis Sandy

....., Co. C, 13 Reg't U.S. Col'd H. Art'y.

Appears on

Company Descriptive Book

of the organization named above.

DESCRIPTION.

Age 23 years; height 5 feet 4½ inches.

Complexion Yellow

Eyes Brown; hair Black

Where born Fodder, Kentucky

Occupation Farmer

ENLISTMENT.

When Sept 24, 1864.

Where Bowling Green

By whom Capt. Holton; term 3 y'rs.

Remarks:

Deserted

(383*g*) **Copyist.**

T | 13 H. Art'y. | U.S.C.T.

Lewis Tandy

Appears with rank of Pvt on

Muster and Descriptive Roll of a Detachment of U. S. Vols. forwarded

for the 13 Reg't U. S. Col'd H. Art'y. Roll dated

Bowling Green, Ky, Sept. 30, 1864.

Where born Todd, Ky

Age 25 y'rs; occupation Farmer

When enlisted Sept. 24, 1864.

Where enlisted Bowling Green, Ky

For what period enlisted 3 years.

Eyes Brown; hair Blk

Complexion Yellow; height 5 ft 4 1/2 in.

When mustered in Sept. 24, 1864.

Where mustered in

Bounty paid $ 100; due $ 100

Where credited

Company to which assigned A

Remarks: New Recruit- Todd- Owned service 10 Dr. Mills Tandy

Book mark:

Hammer

(339) *Copyist.*

13 K. A.

T		U.S.C.T

Lewis Tandy

Appears with rank of Private on

Muster and Descriptive Roll

of a Detachment U.S. Recruits, Bowling Green, Ky

. Roll dated

Bowling Green, Ky Oct 6, 1864.

Where born Todd, Ky

Age 25 years; occupation Farmer

When enlisted Sept 24, 1864.

Where enlisted Bowling Green

For what period enlisted 3 years.

Eyes brown; hair black

Complexion Yellow, height 5 ft. 4 1/2 in.

When mustered in , 186 .

Where mustered in

Bounty paid $ 100; due $ 100

Clothing account:

Last settled , 186 ; drawn since $18 30/100

Date of first muster Sept. 24, 1864.

Company to which assigned

Remarks: New Recruit-
Todd Co. Owed service
to Dr Mills Tandy

Book mark:

W. Marshall

(356m) Copyist.

G | 13 H. Art'y. | U.S.C.T.

Lewis Dandy

Cpl, Co. A, 13 Reg't U. S. Col'd H. Art'y.

Age ..... years.

Appears on

Company Muster Roll*

for Oct 31, 1864.

Joined for duty and enrolled:

When Sept 24, 1864.

Where Bowling Green Ky

Period 3 years

Mustered in:

When Sept 24, 1864.

Where Bowling Green. Ky.

Present or absent Present

Stoppage, $.....100 for .....

Due Gov't, $.....100 for .....

Valuation of horse, $.....100

Valuation of horse equipments, $.....100

Remarks: .....

* First current roll. No muster-in roll of this company on file.

Book mark: .....

(3586) W. G. Hughes

Copyist.

T | 13 H. Art'y. | U.S.C.T.

Lewis Sandy

Paul, Co. A, 13 Reg't U. S. Col'd H. Art'y.

Appears on

Company Muster Roll

for Jan & Feb, 186 5.

Present or absent Present

Stoppage, $ 100 for

Due Gov't, $ 100 for

Valuation of horse, $ 100

Valuation of horse equipments, $ 100

Remarks:

Due $40 first installment
of Gov. Bounty

Book mark:

W. T. Hughes

(358) Copyist.

5 | 13 H. Art'y. | U.S.C.T.

Lewis Sandy

Pvt, Co. A, 13 Reg't U. S. Col'd H. Art'y.

Appears on

Company Muster Roll

for March & Apr, 186 5

Present or absent Present

Stoppage, $ 100 for

Due Gov't, $ 100 for

Valuation of horse, $ 100

Valuation of horse equipments, $ 100

Remarks:

Book mark:

W. O. Hughes

(358) Copyist.

I | 13 H. Art'y. | U.S.C.T.

Lewis Gandy

Pvt, Co. A, 13 Reg't U. S. Col'd H. Art'y.

Appears on

Company Muster Roll

for May & June, 186 5

Present or absent Present

Stoppage, $ 65/100 for C & E

Due Gov't, $ 00/100 for

Valuation of horse, $ 00/100

Valuation of horse equipments, $ 00/100

Remarks: 1st Installment Bounty due.

FROM SECOND AUDITOR'S ROLL.

Book mark:

W. T. Hughes

(358) *Copyist.*

13 H. Art'y. | U.S.C.T.

Samuel Lander

Appears with rank of Pvt. on

Muster and Descriptive Roll of a Detachment of U. S. Vols. forwarded ~~forwarded~~ as

Co. A,
for the 13 Reg't U. S. Col'd H. Art'y. Roll dated

Camp Fifteen Mile Day, June 21, 1865.

Where born Todd Co. Ky.

Age 25 y'rs; occupation Farmer

When enlisted Sept. 24, 1864.

Where enlisted B. Green, Ky.

For what period enlisted 3 years.

Eyes Brown; hair Blk

Complexion Yellow; height 5 ft. 11½ in.

When mustered in Sept. 24, 1864.

Where mustered in B. Green, Ky.

Bounty paid $ 100; due $ 100

Where credited

Company to which assigned A.

Remarks:

Book mark:

(339) Copyist.

G | 13 H. Art'y. | U.S.C.T.

Isaac Gourdy

Pvt., Co. A, 13 Reg't U. S. Col'd H. Art'y.

Appears on

Company Muster Roll

for July & Aug, 186 5.

Present or absent Present.

Stoppage, $ 100 for

Due Gov't, $ 100 for

Valuation of horse, $ 100

Valuation of horse equipments, $ 100

Remarks: Due 1st Installment Govt Bounty $100

HOLD ROLL ON FILE MUSTER OUT.

Book mark:

W. T. Hughes

Copyist.

F 13 H. Art'y. U.S.C.T.

Lewis Gundy

Pvt., Co. A, 13 Reg't U. S. Col'd H. Art'y.

Appears on **Co. Muster-out Roll,** dated Louisville Ky, Nov. 18, 186 5.

Muster-out to date Nov 18, 186 5.

Last paid to June 30, 186 5.

Clothing account:

Last settled ....., 186 ; drawn since $ 100

Due soldier $ 2 52/100; due U. S. $ 100

Am't for cloth'g in kind or money adv'd $ 100

Due U. S. for arms, equipments, &c., $ 100

Bounty paid $ 100 00/100; due $ 100

Remarks: .....

.....

.....

.....

.....

.....

.....

Book mark: .....

W. T. Hughes

(361) *Copyist.*

Jandy Lewis

....., Co. ....., ... Reg't U. S. C. T.

2 **Enclosures.**

Bed Cards	Final Statements .....
Burial Records	Furloughs or L. of A. .....
Certs. of Dis. for Discharge	Med. Certificates .....
C. M. Charges	Med. Des. Lists .....
Descriptive Lists	Orders .....
Discharge Certificates	Pris. of War Record .....
Enlistment Papers 2	Resignations .....

Other papers relating to—

Admission to Hosp'l	Furlough or L. of A. .....
Casualty Sheet	Med. Examination .....
Confinement	Misc. Information .....
Contracts	Pay or Clothing .....
Death or Effects	Personal Reports .....
Desertion	Rank .....
Discharge from Hosp'l	Transfer to Hosp'l .....
Discharge from Service	Transfer to V. R. C. .....
Duty	Transportation .....
.....	.....

NOTE 1.—This blank will be used for enlistments of United States colored troops. They will be made out in duplicate in all cases—one to accompany the return of the superintendent (not the recruiting officer) to the Adjutant General, and one to accompany the accounts of the officer who pays bounty, &c.

NOTE 2.—An enlistment holds to service. A muster-in must, in all cases, precede payment of pay, bounty, pension, &c. A muster-in roll, must in all cases, be filed in the Adjutant General's Office as evidence of muster-in. The mustering officer, commissary, or assistant commissary of musters, as the case may be, will countersign both enlistments as having mustered the soldiers into the service of the United States before either of them is given to the disbursing officer.

DECLARATION OF RECRUIT.

I, Lewis Tunsley ..... desiring to volunteer as a soldier in the ARMY OF THE UNITED STATES, for the term of *Three Years*,

DO DECLARE That I am 28 years and ..... months of age; that I have never been discharged from the United States service on account of disability or by sentence of a court-martial, or by order before the expiration of a term of enlistment; and I know of no impediment to my serving honestly and faithfully as a soldier for three years.

GIVEN at Burkins Green Ky

the 24th day of Sept 1864

Witness: A Dobson Capt & Pr Mar 3d
2d Lieut Rej & Recg Officer

Lewis his X Tunsley
mark

No. 28 Volunteered at Louisville Ky Sept 24 1864
By A Dobson Capt & Pr Mar
Capt Pr Mar

Consent of Parent or Guardian in case of a Minor, if a Free Man, or in the case of a Slave, of the Person to whom he owes Service:

I, ... DO CERTIFY, That I am

the .....

.....

that the said ..... is ..... years of age; and I do freely give my CONSENT to his volunteering as a SOLDIER in the Army of the United States, for the period of THREE YEARS, under the conditions of the laws of the United States.

GIVEN at .....

the ..... day of .....

Witness:

.....

(A. G. O. No. 74 & 76.)

UNITED STATES COLORED TROOPS ENLISTMENT.

STATE OF Kentucky TOWN OF Bowling Green

I, Lewis Tandy born in Todd Co.

in the State of Kentucky aged Twenty five years

and by occupation a Farmer, Do HEREBY ACKNOWLEDGE to

have volunteered 24th day of Sept 1864

to serve as a **Soldier** in the **Army of the United States of America,** for the period of THREE YEARS, unless sooner discharged by proper authority: Do also agree to accept such bounty, pay, rations, and clothing, as are, or may be, established by law for the U. S. colored troops.

And I, Lewis Tandy

do solemnly swear that I will bear true faith and allegiance to the **United States of America,** and that I will serve them honestly and faithfully against all their enemies or opposers whomsoever; and that I will observe and obey the orders of the President of the United States, and the orders of the officers appointed over me, according to the Rules and Articles of War.

Sworn and subscribed to, at Bowling Green

this 24th day of Sept 1864

Before A G Stuber Capt & Bvt Maj 3d Dist Ky & Recruiting Officer

his Lewis X Tandy mark

I CERTIFY, ON HONOR, That I have carefully examined the above named Volunteer agreeably to the General Regulations of the Army, and that, in my opinion, he is free from all bodily defects and mental infirmity, which would in any way disqualify him from performing the duties of a soldier.

J R Bailey

EXAMINING SURGEON.

I CERTIFY, ON HONOR, That I have minutely inspected the Volunteer Lewis Tandy previously to his enlistment, and that he was entirely sober when enlisted; that, to the best of my judgment and belief, he is of lawful age; and that, in accepting him as duly qualified to perform the duties of an able-bodied soldier, I have strictly observed the regulations which govern the recruiting service. This soldier has brown eyes, Black hair, Yellow complexion, is 5 feet 4½ inches high.

A G Stuber Capt & Bvt Maj 3d Dist Ky Cav

RECRUITING OFFICER OR AGENT.

Mustered into the United States Service 24th day of Sept 1864

A G Stuber Capt & Bvt Maj 3d Dist Ky Cav

Mustering Officer.

Mustered into the service of the United States, for three years or during the war, from date of enlistment, in Company ..... Regiment of ..... Volunteers, on the ..... day of ....., 186 , at .....

NOTE 1.—This blank will be used for enlistments of United States colored troops. They will be made out in duplicate in all cases—one to accompany the recruiting return of the superintendent (not the recruiting officer) to the Adjutant General, and one to accompany the accounts of the officer who pays bounty, &c.

NOTE 2.—An enlistment holds to service. A muster-in must, in all cases, be filed in the Adjutant General's Office as evidence of muster-in. The mustering officer, commissary, or assistant commissary of musters, as the case may be, will countersign both enlistments as having mustered the soldiers into the service of the United States before either of them is given to the disbursing officer.

DECLARATION OF RECRUIT.

I, Louis Landy, 1st, desiring to volunteer as a soldier in the ARMY OF THE UNITED STATES, for the term of *Three Years*, DO DECLARE That I am 23 years and ..... months of age; that I have never been discharged from the United States service on account of disability or by sentence of a court-martial, or by order before the expiration of a term of enlistment; and I know of no impediment to my serving honestly and faithfully as a soldier for three years.

GIVEN at Bowling Green, Ky.

the 24 day of Sept. 1864

Witness:
A. H. Stilson Capt. & Rec. Offr
3d Dist. Ky. & Cadg. Offrs

Louis his ✕ Landy
mark

Volunteered at .....

No. 116

By .....

18 .

Louis Landy

Consent of Parent or Guardian in case of a Minor, if a Free Man, or in the case of a Slave, of the Person to whom he owes Service:

I, ... DO CERTIFY, That I am

the .....

.....

that the said ..... is ..... years of age; and I do freely give my CONSENT to his volunteering as a SOLDIER in the Army of the United States, for the period of THREE YEARS, under the conditions of the laws of the United States.

GIVEN at .....

the ..... day of .....

Witness:

.....

.....

(A. G. O. No. 74 & 76.)

UNITED STATES COLORED TROOPS ENLISTMENT.

STATE OF Kentucky TOWN OF Bowling Green

I, Lewis Sandy born in Todd Co.

in the State of Kentucky aged Twenty five years

and by occupation a Farmer Do HEREBY ACKNOWLEDGE to

have volunteered 24 day of September 1864

to serve as a **Soldier** in the **Army of the United States of America,** for the period of THREE YEARS, unless sooner discharged by proper authority; Do also agree to accept such bounty, pay, rations, and clothing, as are, or may be, established by law for the U. S. colored troops.

And I, Lewis Sandy

do solemnly swear that I will bear true faith and allegiance to the **United States of America,** and that I will serve them honestly and faithfully against all their enemies or opposers whomsoever; and that I will observe and obey the orders of the President of the United States, and the orders of the officers appointed over me, according to the Rules and Articles of War.

Sworn and subscribed to, at Bowling Green

this 24th day of Sept 1864 Lewis his X Sandy mark

Before A G Olson Capt & Pro Mar 3d

Dist Ky & Recrtg Officer

I CERTIFY, ON HONOR, That I have carefully examined the above named Volunteer agreeably to the General Regulations of the Army, and that, in my opinion, he is free from all bodily defects and mental infirmity, which would in any way disqualify him from performing the duties of a soldier.

J R Bailey

EXAMINING SURGEON.

I CERTIFY, ON HONOR, That I have minutely inspected the Volunteer, Lewis Sandy previously to his **enlistment, and that he was entirely sober when enlisted**; that, to the best of my judgment **and belief, he** is of lawful age; and that, in accepting him as duly qualified to perform the duties of an able-bodied soldier, I have strictly observed the regulations which govern the recruiting service. This soldier has Brown *eyes*, Black *hair*, Yellow *complexion*, is five *feet* 10½ *inches* high.

A G Olson Capt & Pro. Mus. 3d

Dist. Ky and RECRUITING OFFICER OR AGENT.

Mustered into the United States Service 24th day of Sept. 1864

A G Olson Capt & Pro. Mus

3d Dist. Ky and *Mustering Officer.*

Mustered into the service of the United States, for three years or during the war, from date of enlistment, in Company ..... Regiment of ..... Volunteers, on the ..... day of ....., 186 , at .....

1999.

Sandy Hilliam

Co C, 13 U.S.Col'd H.Art'y.

Private	Private

CARD NUMBERS.

1	5-5-15-8 7 1	26	
2	5-5-1 6 8 9 6	27	
3	5-5-2 1 7 0 4	28	
4	5-5-2 1 8 8 3	29	
5	5-5-2 2 0 2 6	30	
6	5-5-2 1 5-3 3	31	
7	9 1 2 8 4 1 0	32	
8		33	
9		34	
10		35	
11		36	
12		37	
13		38	
14		39	
15		40	
16		41	
17		42	
18		43	
19		44	
20		45	
21		46	
22		47	
23		48	
24		49	
25		50	

Book Mark:

See also

δ 893056 = 2" and
δ 1350871.00 m.m.

J. P. Lamont Del

I | **13 H. Art'y.** | **U.S.C.T.**

William Sandy

....., Co. C, 13 Reg't U.S. Col'd H. Art'y.

Appears on

Company Descriptive Book

of the organization named above.

DESCRIPTION.

Age 21 years; height 5 feet 7 inches.

Complexion Black

Eyes Black; hair Black

Where born Kentucky

Occupation Laborer

ENLISTMENT.

When Feb 1, 1864.

Where Paducah Ky

By whom Capt Morgan; term 3 y'rs.

Remarks:

Deserted

(383*g*) **Copyist.**

T | 13 H. Art'y. | U.S.C.T.

William Tandy

Appears with rank of Pvt on

Muster and Descriptive Roll of a Detachment of U. S. Vols. forwarded

for the 13 Reg't U. S. Col'd H. Art'y. Roll dated

Paducah, Ky, Feb. 27, 1865.

Where born Kentucky

Age 24 y'rs; occupation Laborer

When enlisted Feb. 1, 1865.

Where enlisted Paducah, Ky

For what period enlisted 3 years.

Eyes Black; hair Black

Complexion Black; height 5 ft. 9 in.

When mustered in Feb. 1, 1865.

Where mustered in Paducah, Ky

Bounty paid $ 100; due $ 100

Where credited Trigg Co. 1st Dist of Ky

Company to which assigned K

Remarks:

Book mark:

Hammer

Copyist.

J | 13 H. Art'y. | U.S.C.T.

William Tandy

Pt, Co. C, 13 Reg't U. S. Col'd H. Art'y.

Age ..... years.

Appears on

Company Muster Roll*

for to Apr 30, 1865.

Joined for duty and enrolled:

When Feb 1, 1865.

Where Paducah Ky

Period 3 years

Mustered in:

When Feb 1, 1865.

Where Paducah Ky

Present or absent Present.

Stoppage, $ 100 for .....

Due Gov't, $ 100 for .....

Valuation of horse, $ 100

Valuation of horse equipments, $ 100

Remarks: .....

* First current roll. No muster-in roll of this company on file.

Book mark: .....

Wm Tandy.

(3586) Copyist.

G. | 13 H. Art'y. | U.S.C.T.

William Tandy

Pt, Co. C, 13 Reg't U. S. Col'd H. Art'y.

Appears on

Company Muster Roll

for May & June, 186 5.

Present or absent Present

Stoppage, $ 100 for

Due Gov't, $ 100 for

Valuation of horse, $ 100

Valuation of horse equipments. $ 100

Remarks: No County rec'd, due first installment of County.

FROM SECOND AUDITOR'S ROLL.

Book mark:

Wm Hunton

(358) Copyist.

H | 13 H. Art'y. | U.S.C.T.

William Sandy

Appears with rank of Pvt on

Muster and Descriptive Roll of a Detachment of U. S. Vols. ~~forwarded~~ enlisted

for the 13 Reg't U. S. Col'd H. Art'y. Roll dated

Camp Nelson, Ky June 23, 1863.

Where born Kentucky

Age 44 y'rs; occupation Laborer

When enlisted Feb. 1, 1863.

Where enlisted Paducah, Ky.

For what period enlisted 3 years.

Eyes Black; hair Black

Complexion Black; height 5 ft. 9 in.

When mustered in Feb. 1, 1863.

Where mustered in Paducah, Ky

Bounty paid $none 100; due $ 100

Where credited Loongview. Ky

Company to which assigned C & F

Remarks:

Book mark:

(339) Copyist.

I | 13 H. Art'y. | U.S.C.T.

William Sandy

Pt, Co. C, 13 Reg't U. S. Col'd H. Art'y.

Appears on

Company Muster Roll

for July & Aug, 1865.

Present or absent Present

Stoppage, $ 100 for

Due Gov't, $ 100 for

Valuation of horse, $ 100

Valuation of horse equipments. $ 100

Remarks: Recd first instal-
ment bounty $100.00

NEXT ROLL ON FILE MUSTER OUT.

Book mark:

John Hamlin

(358) Copyist.

I | 13 H. Art'y. | U.S.C.T.

William Tandy

Pt, Co. D, 13 Reg't U. S. Col'd H. Art'y.

Appears on **Co. Muster-out Roll,** dated Louisville Ky, Nov 18, 1865.

Muster-out to date Nov 18, 1865.

Last paid to June 30, 1865.

Clothing account:

Last settled ....., 186 ; drawn since $ 100

Due soldier $ ..... 100; due U. S. $ 17 30/100

Am't for cloth'g in kind or money adv'd $ 100

Due U. S. for arms, equipments, &c., $ 100

Bounty paid $ 100 00/100; due $ 100

Remarks: .....

Book mark: .....

Van Houton

(361) *Copyist.*

Tandy, Jr.

F, Co. , 13 Reg't U S C A

Enclosures.

Bed Cards	Final Statements
Burial Records	Furloughs or L. of A.
Certs. of Dis. for Discharge	Med. Certificates
C. M. Charges	Med. Des. Lists
Descriptive Lists	Orders
Discharge Certificates	Pris. of War Record
Enlistment Papers /	Resignations

Other papers relating to—

Admission to Hosp'l	Furlough or L. of A.
Casualty Sheet	Med. Examination
Confinement	Misc. Information
Contracts	Pay or Clothing
Death or Effects	Personal Reports
Desertion	Rank
Discharge from Hosp'l	Transfer to Hosp'l
Discharge from Service	Transfer to V. R. C.
Duty	Transportation

DECLARATION OF RECRUIT.

I, William Sandy of Trigg County, desiring to volunteer as a soldier in the ARMY OF THE UNITED STATES, for the term of *Three Years*, DO DECLARE That I am 21 years and 6 months of age; that I have never been discharged from the United States service on account of disability or by sentence of a court-martial, or by order before the expiration of a term of enlistment; and I know of no impediment to my serving honestly and faithfully as a soldier for three years.

GIVEN at Paducah Ky

the 1st day of Feby 1865

Witness:

E R Bradshaw

his
William X Sandy
mark

Volunteered at Camp Eighty-Seven, No. Eighty-Seven

the 1st day of February 1865

By Capt Morgan

Recruiting Officer

Pro Tem

Ky

Consent of Parent or Guardian in case of a Minor, if a Free Man, or in the case of a Slave, of the Person to whom he owes Service:

I, ... DO CERTIFY, That I am

the .....

.....

that the said ..... is ..... years of age; and I do freely give my CONSENT to his volunteering as a SOLDIER in the Army of the United States, for the period of THREE YEARS, under the conditions of the laws of the United States.

GIVEN at .....

the ..... day of .....

Witness:

.....

.....

(A. G. O. No. 74 & 76.)

NOTE 1.—This blank will be used for enlistments of United States colored troops. They will be made out in duplicate in all cases—one to accompany the recruiting return of the superintendent (not the recruiting officer) to the Adjutant General, and one to accompany the accounts of the officer who pays bounty, &c.

NOTE 2.—An enlistment holds to service. A muster-in roll, must in all cases, precede payment of pay, bounty, pension, &c. A muster-in roll, must in all cases, be filed in the Adjutant General's Office as evidence of muster-in. The mustering officer, commissary, or assistant commissary of musters, as the case may be, will countersign both enlistments as having mustered the soldiers into the service of the United States before either of them is given to the disbursing officer.

UNITED STATES COLORED TROOPS ENLISTMENT.

STATE OF Kentucky

TOWN OF accredited to Trigg

I, William Tandy born in

in the State of Kentucky aged Twenty four years

and by occupation a Laborer Do HEREBY ACKNOWLEDGE to

have volunteered First day of Feby 1865,

to serve as a **Soldier** in the **Army of the United States of America,** for the period of THREE YEARS, unless sooner discharged by proper authority: Do also agree to accept such bounty, pay, rations, and clothing, as are, or may be, established by law for the U. S. colored troops.

And I, William Tandy of Trigg Coky

do solemnly swear that I will bear true faith and allegiance to the **United States of America,** and that I will serve them honestly and faithfully against all their enemies or opposers whomsoever; and that I will observe and obey the orders of the President of the United States, and the orders of the officers appointed over me, according to the Rules and Articles of War.

Sworn and subscribed to, at Paducah Ky

this 1st day of Feby 1865

Before Jno H Morgan Capt Asst Q M

his
William X Tandy
mark

I CERTIFY, ON HONOR, That I have carefully examined the above named Volunteer agreeably to the General Regulations of the Army, and that, in my opinion, he is free from all bodily defects and mental infirmity, which would in any way disqualify him from performing the duties of a soldier.

L M Best

EXAMINING SURGEON.

I CERTIFY, ON HONOR, That I have minutely inspected the Volunteer, Wm Tandy previously to his enlistment, and that he was entirely sober when enlisted; that, to the best of my judgment and belief, he is of lawful age; and that, in accepting him as duly qualified to perform the duties of an able-bodied soldier, I have strictly observed the regulations which govern the recruiting service. This soldier has Blk eyes, Blk hair, Blk complexion, is 5 feet 9 inches high.

RECRUITING OFFICER OR AGENT.

Mustered into the United States Service 1st day of Feby 1865.

Jno H Morgan Capt Asst Q M
Mustering Officer.
Paducah Ky

Mustered into the service of the United States, for three years or during the war, from date of enlistment, in Company Colored

1st day of Feby, 1865, at Paducah Ky

Jno H Morgan Capt Asst Q M
Paducah Ky

2000

Capt. Cobb

Co C, 13 U.S.Col'd H. Art'y.

Private | Private

CARD NUMBERS.

1	55158730	26	
2	5516857	27	
3	5521534	28	
4	5521705	29	
5	5521884	30	
6	5522027	31	
7	9128411	32	
8		33	
9		34	
10		35	
11		36	
12		37	
13		38	
14		39	
15		40	
16		41	
17		42	
18		43	
19		44	
20		45	
21		46	
22		47	
23		48	
24		49	
25		50	

Book Mark:

See also

I | 13 H. Art'y. | U.S.C.T.

Catt Taylor

....., Co. C, 13 Reg't U. S. Col'd H. Art'y.

Appears on

Company Descriptive Book

of the organization named above.

DESCRIPTION.

Age 44 years; height 5 feet 6 inches.

Complexion Yellow

Eyes black; hair Black

Where born Louisville Ky

Occupation Laborer

ENLISTMENT.

When Feb 4, 1863.

Where Lavaca Ky

By whom Capt Morgan; term 3 y'rs.

Remarks:

Deadrick T.

(383*g*) **Copyist.**

9 | 13 H. Art'y. | U.S.C.T.

Capt Tapp

Pvt, Co. 6, 13 Reg't U. S. Col'd H. Art'y.

Age ..... years.

Appears on

Company Muster Roll*

for to Apr 30, 1865.

Joined for duty and enrolled:

When Feb 4, 1865.

Where Paducah Ky

Period 3 years

Mustered in:

When Feb 4, 1865.

Where Paducah Ky

Present or absent Present.

Stoppage, $ 100 for .....

Due Gov't, $ 100 for .....

Valuation of horse, $ 100

Valuation of horse equipments, $ 100

Remarks: .....

* First current roll. No muster-in roll of this company on file.

Book mark: .....

Vanatta

Copyist.

(3586)

T | 13 H. Art'y. | U.S.C.T.

Robb Gabriel

Appears with rank of Pvt on

Muster and Descriptive Roll of a Detachment of U. S. Vols. forwarded

for the 13 Reg't U. S. Col'd H. Art'y. Roll dated

Paducah, Ky, Feb. 27, 1865.

Where born Kentucky

Age 44 y'rs; occupation Laborer

When enlisted Feb. 4, 1865.

Where enlisted Paducah, Ky

For what period enlisted 3 years.

Eyes Black; hair Black

Complexion Yellow; height 5 ft. 8 in.

When mustered in Feb. 4, 1865.

Where mustered in Paducah, Ky

Bounty paid $ 100; due $ 100

Where credited Hopkinsville 2d Dist of Ky

Company to which assigned I

Remarks:

Book mark:

Hammer

(339) *Copyist.*

S | 13 H. Art'y. | U.S.C.T.

Cobb Gap

Appears with rank of Pvt on

Muster and Descriptive Roll of a Detachment of U. S. Vols. ~~forwarded~~ organized

for the 13 Reg't U. S. Col'd H. Art'y. Roll dated

Camp Nelson, Ky. June 23, 1865.

Where born Kentucky

Age 44 y'rs; occupation Laborer

When enlisted Feb. 14, 1865.

Where enlisted Paducah, Ky.

For what period enlisted 3 years.

Eyes Black; hair Black

Complexion Yellow; height 5 ft. 8 in.

When mustered in Feb. 14, 1865.

Where mustered in Paducah Ky

Bounty paid $~~None~~ 100; due $~~100~~

Where credited 2 Cong. Dist. Ky

Company to which assigned C

Remarks:

Book mark:

E B Taylor

(339) Copyist.

I | 13 H. Art'y. | U.S.C.T.

Cobb Capt

Pvt, Co. C, 13 Reg't U. S. Col'd H. Art'y.

Appears on

Company Muster Roll

for May & June, 1865.

Present or absent Present

Stoppage, $ 100 for

Due Gov't, $ 100 for

Valuation of horse, $ 100

Valuation of horse equipments. $ 100

Remarks: No bounty paid due from Enlistment of bounty

FROM SECOND AUDITOR'S ROLL.

Book mark:

Vanauthen

(358) Copyist.

I | 13 H. Art'y. | U.S.C.T.

Corp. Capt

P, Co. C, 13 Reg't U. S. Col'd H. Art'y.

Appears on

Company Muster Roll

for July & Aug, 1865.

Present or absent Present

Stoppage, $ 100 for

Due Gov't, $ 100 for

Valuation of horse, $ 100

Valuation of horse equipments. $ 100

Remarks: Bal. first instal-
ment Bounty $ 100.00

NEXT ROLL ON FILE MUSTER OUT.

Book mark:

Jas. Houston

Copyist.

(858)

G | 13 H. Art'y. | U.S.C.T.

Cobb Tapp

Pt., Co. G, 13 Reg't U. S. Col'd H. Art'y.

Appears on **Co. Muster-out Roll,** dated

Louisville Ky., Nov 18, 1865.

Muster-out to date Nov 18, 1865.

Last paid to June 30, 1865.

Clothing account:

Last settled ....., 186 ; drawn since $ 100

Due soldier $ 5 41/100; due U. S. $ 100

Am't for cloth'g in kind or money adv'd $ 100

Due U. S. for arms, equipments, &c., $ 100

Bounty paid $ 100 00/100; due $ 100

Remarks: .....

Book mark: .....

Dan Houston

(361) *Copyist.*

Capt. Cobb

....., Co. ....., 13 Reg't U.S.C.H.A.

1 **Enclosures.**

Bed Cards	Final Statements
Burial Records	Furloughs or L. of A.
Certs. of Dis. for Discharge	Med. Certificates
C. M. Charges	Med. Des. Lists
Descriptive Lists	Orders
Discharge Certificates	Pris. of War Record
Enlistment Papers 1	Resignations

Other papers relating to—

Admission to Hosp'l	Furlough or L. of A.
Casualty Sheet	Med. Examination
Confinement	Misc. Information
Contracts	Pay or Clothing
Death or Effects	Personal Reports
Desertion	Rank
Discharge from Hosp'l	Transfer to Hosp'l
Discharge from Service	Transfer to V. R. C.
Duty	Transportation

MICROFILM PUBLICATION M 1834

COMPILED MILITARY SERVICE RECORDS
OF VOLUNTEER UNION SOLDIERS WHO SERVED WITH
THE UNITED STATES COLORED TROOPS (USCT)
13TH REGIMENT OF HEAVY ARTILLERY

PERSONAL PAPERS' TARGET SHEET

PLEASE NOTE THE CHECKED INFORMATION ABOUT THE PERSONAL PAPERS IN THIS FILE:

☐ NO PERSONAL PAPERS WERE FOUND IN THIS FILE WHEN THE RECORDS WERE ARRANGED FOR MICROFILMING.

☒ 2 PERSONAL PAPER(S) FOUND IN THIS FILE WHEN THE RECORDS WERE ARRANGED FOR MICROFILMING.

NOTE 1.—This blank will be made out in duplicate in all cases—one to accompany the recruiting return of the superintendent (not the recruiting officer) to the Adjutant General, and one to be used for enlistments of United States colored troops. They will be made out in duplicate in all cases—one to accompany the accounts of the officer who pays bounty, &c.

NOTE 2.—An enlistment holds to service. A muster-in roll, must in all cases, be filed in the Adjutant General's Office as evidence of muster-in. The mustering officer, commissary of musters, or assistant commissary of musters, as the case may be, will countersign both enlistments as having mustered the soldiers into the service of the United States before either of them is given to the disbursing officer.

DECLARATION OF RECRUIT.

I, Cobb & Tapp of Hopkins Co 2nd Dist Ky desiring to volunteer as a soldier in the ARMY OF THE UNITED STATES, for the term of *Three Years*, DO DECLARE That I am 44 years and ..... months of age; that I have never been discharged from the United States service on account of disability or by sentence of a court-martial, or by order before the expiration of a term of enlistment; and I know of no impediment to my serving honestly and faithfully as a soldier for three years.

GIVEN at Paducah Ky

the 4th day of July 1864

Witness: E R Bradshaw

Cobb & Tapp
Mastr

Volunteered at Owensboro Ky
July 4th 1864
By Capt Morgan
Co I 12th Regt Ky Cav

No. Eighty-Eight

Co I 12th Ky Cav

Consent of Parent or Guardian in case of a Minor, if a Free Man, or in the case of a Slave, of the Person to whom he owes Service:

I, ... DO CERTIFY, That I am

the .....

.....

that the said ..... is .... years of age; and I

do freely give my CONSENT to his volunteering as a SOLDIER in the Army of the United States,

for the period of THREE YEARS, under the conditions of the laws of the United States.

GIVEN at .....

the ..... day of .....

Witness:

.....

.....

(A. G. O. No. 74 & 76.)

UNITED STATES COLORED TROOPS ENLISTMENT.

STATE OF Kentucky

TOWN OF Accepted to Hopkins Co

I, Cobb Tapp born in

in the State of Kentucky aged Forty four years

and by occupation a Laborer Do HEREBY ACKNOWLEDGE to

have volunteered Fourth day of July 1865,

to serve as a **Soldier** in the **Army of the United States of America,** for the period of THREE YEARS, unless sooner discharged by proper authority: Do also agree to accept such bounty, pay, rations, and clothing, as are, or may be, established by law for the U. S. colored troops. 2nd Dist Ky

And I, Cobb Tapp of Hopkins Co Ky do solemnly swear that I will bear true faith and allegiance to the **United States of America,** and that I will serve them honestly and faithfully against all their enemies or opposers whomsoever; and that I will observe and obey the orders of the President of the United States, and the orders of the officers appointed over me, according to the Rules and Articles of War.

Sworn and subscribed to, at Hopkinsville Ky
this 4th day of July 1865
Before Jno H Morgan
Capt & Bvt Major 1st Dist Ky

his
Cobb X Tapp
mark

I CERTIFY, ON HONOR, That I have carefully examined the above named Volunteer agreeably to the General Regulations of the Army, and that, in my opinion, he is free from all bodily defects and mental infirmity, which would in any way disqualify him from performing the duties of a soldier.

S M Dust

EXAMINING SURGEON.

I CERTIFY, ON HONOR, That I have minutely inspected the Volunteer, Cobb Tapp previously to his enlistment, and that he was entirely sober when enlisted; that, to the best of my judgment and belief, he is of lawful age; and that, in accepting him as duly qualified to perform the duties of an able-bodied soldier, I have strictly observed the regulations which govern the recruiting service. This soldier has Blk. *eyes*, Blk. *hair*, Yellow *complexion*, is 5 *feet* 8 *inches* high.

RECRUITING OFFICER OR AGENT.

Mustered into the United States Service 4th day of July 1865.

Jno H Morgan
Capt Bvt Maj & Mustering Officer
1st Dist Ky

Mustered into the service of the United States, for three years or during the war, from date of enlistment, in Company ____ of the 4th Regiment of Kentucky Volunteers, on the 4th day of July, 1865, at Hopkinsville Ky

By Jno H Morgan
Capt Bvt Maj
1st Dist Ky

SCOPE OF EXAMINATION FOR PROMOTION TO LIEUTENANT COLONEL

ALL SECTIONS - MEDICAL DEPARTMENT RESERVE CORPS.

I For all applicants

1. Organization and major functions of -

   a. Army of the United States
   b. Component units of the combined arms.
   c. Medical Department units of the Army.

2. Principles of military discipline and military command.

II For Command - Administrative

1. Organization and technique of operation of divisional units of the Medical Department.

2. [illegible]

2001

Tash, Edward

Co K, 13 U.S.Col'd H. Art'y.

Private	Private

CARD NUMBERS.

1	55 18219	26	
2	55 24906	27	
3	55 25041	28	
4	912,937 4	29	
5	9. 8-29-1869.	30	
6		31	
7		32	
8		33	
9		34	
10		35	
11		36	
12		37	
13		38	
14		39	
15		40	
16		41	
17		42	
18		43	
19		44	
20		45	
21		46	
22		47	
23		48	
24		49	
25		50	

Book Mark: T. 8 Vol. 7. 26 T. 69

See also Co Co. 120 USC Inf.

S 534.067 2nd ed.
S 643277 - 2nd. Rev.
S-676718. 2d. ed. (P.O.)
S-698942. 2d. ed. Rev.
P. Owens, M.O. 35713 [illegible]

J. W. Thurston Co.

13 H. Art'y. | U.S.C.T.

Edward Taylor

....., Co. K, 13 Reg't U. S. Col'd H. Art'y.

Appears on

Company Descriptive Book

of the organization named above.

DESCRIPTION.

Age 30 years; height 5 feet 6 inches.

Complexion Dark

Eyes Dark; hair Dark

Where born Orange Co. N. C.

Occupation Farmer

ENLISTMENT.

When Dec 1, 1864.

Where N. Kingston Ky

By whom Lt. Col. Stein; term 5 y'rs.

Remarks:

E. N. Fitzgerald

(383*g*) **Copyist.**

T | 13 H. Art'y. | U.S.C.T.

Edward John

Pvt., Co. K, 13 Reg't U. S. Col'd H. Art'y.

Appears on

M. and D. Roll of Men Transferred

to the organization named above,

from Co. C. 120

Roll dated Camp Nelson, Ky. June 23, 1865.

When enlisted Dec 1, 1864.

Period for which enlisted 3 years.

When mustered in Dec 12, 1864.

Present or absent Not stated

Company to which assigned

Remarks:

Book mark:

Rochester

(342) *Copyist.*

F | 13 H. Art'y. | U.S.C.T.

Edward Tapp

Pvt, Co. K, 13 Reg't U. S. Col'd H. Art'y.

Age ..... years.

Appears on

Company Muster Roll*

for June 30, 1865.

Joined for duty and enrolled:

When Dec. 1, 1864.

Where Henderson Ky

Period 3 years

Mustered in: FROM SECOND AUDITOR'S ROLL.

NEXT ROLL ON FILE MUSTER OUT.

When Dec. 12, 1864.

Where Owensboro Ky.

Present or absent absent

Stoppage, $ 100 for .....

Due Gov't, $ 100 for .....

Valuation of horse, $ 100

Valuation of horse equipments, $ 100

Remarks: Transferred from 120 U.S.C.I. Sick in Gen. (over)

* First current roll. No muster-in roll of this company on file.

Book mark: F. 8. Oct - 1869

Galligan

(3586) Copyist.

JAN. 16 1891 ☆ 5524906

Hospt Louisville Ky. since
June 25. 1865.
1st installment of bounty due

F | 13 H. Art'y. | U.S.C.T.

Edward Fasp

Pvt, Co. K, 13 Reg't U. S. Col'd H. Art'y.

Appears on **Co. Muster-out Roll,** dated Louisville Ky., Nov. 18, 1865.

Muster-out to date × ~~Nov 18, 1865~~.

Last paid to Pay due from enlistment, 186 .

Clothing account:

Last settled ....., 186 ; drawn since $ 100

Due soldier $ 52 77/100; due U. S. $ 100

Am't for cloth'g in kind or money adv'd $ 100

Due U. S. for arms, equipments, &c., $ 100

Bounty paid $ ..... 100; due $ 100 00/100

Remarks:

× Corrected Feb 23/93 Had

Book mark: Discharge F. 8 Vol. 7. C. T. 69

Galligan

(361) *Copyist.*

I | 13" N.H. U.S. Vol.

Edward Tash

Rank Pvt., Co. K, 13" Reg't N.H. Vol.

NOTATION.

Book mark: I. 8. 6. V. 1869.

War Department,

Record and Pension Division,

Washington, July 18", 1892.

It has this day (July 18", 1892,) been determined by this Department from the records on file that this man was admitted to Joe Holt G. H., Jeffersonville Ind., July 18, 1865, with Chronic diarrhea and died July 20, 1865 cause Chronic diarrhea.

Moran

(440) *Copyist.*

3002

Capt. Richard

Co K, 13 U.S.Col'd H. Art'y.

Private	Private

CARD NUMBERS.

1	55182221	26	
2	552 4908	27	
3	55 25043	28	
4	91293 76	29	
5		30	
6		31	
7		32	
8		33	
9		34	
10		35	
11		36	
12		37	
13		38	
14		39	
15		40	
16		41	
17		42	
18		43	
19		44	
20		45	
21		46	
22		47	
23		48	
24		49	
25		50	

Book Mark:

See also Co D. 120 USC Inf

L | **13** H. Art'y. | **U.S.C.T.**

Richard Tate

Co. K, 13 Reg't U. S. Col'd H. Art'y.

Appears on

Company Descriptive Book

of the organization named above.

DESCRIPTION.

Age 25 years; height 5 feet 7 inches.

Complexion Black

Eyes Brown; hair Black

Where born Madison Co Ky

Occupation Farmer

ENLISTMENT.

When Feb 6, 1865.

Where Richmond Ky

By whom Lt Col Gilmore, term 3 y'rs.

Remarks:

E A Fitzacomb

(383*g*) Copyist.

J | 13 H. Art'y. | U.S.C.T.

Richard Tohk

Pvt., Co. K, 13 Reg't U. S. Col'd H. Art'y.

Appears on

M. and D. Roll of Men Transferred

to the organization named above,

from Co. D, 120

Roll dated Camp Hudson, N.Y. June 23, 1865.

When enlisted Feb. 6, 1865.

Period for which enlisted 3 years.

When mustered in Feb 10, 1865.

Present or absent Not Stated

Company to which assigned

Remarks:

Book mark:

Prosser

(342) *Copyist.*

	13 H. Art'y.	U.S.C.T.

Richard Tapp

Pvt, Co. K, 13 Reg't U. S. Col'd H. Art'y.

Age ..... years.

Appears on

Company Muster Roll*

for June 30, 1865.

Joined for duty and enrolled:

When Feby 6, 1865.

Where Henderson Ky.

Period 3 years

Mustered in: FROM SECOND AUDITOR'S ROLL.

NEXT ROLL ON FILE MUSTER OUT.

When Feby 10, 1865.

Where Louisville Ky

Present or absent Absent

Stoppage, $.....100 for .....

Due Gov't, $.....100 for .....

Valuation of horse, $.....100

Valuation of horse equipments, $.....100

Remarks: Transferred from 120 U.S.C.I. Sick in Gen. (over)

* First current roll. No muster-in roll of this company on file.

Book mark: .....

Galligan

Copyist.

JAN. 16 5524908 1891 ☆

Hospt. Louisville Ky. since
June 25: 1865.
1st installment of bounty due.

F | 13 H. Art'y. | U.S.C.T.

Richard Fapp

Pvt., Co. K, 13 Reg't U. S. Col'd H. Art'y.

Appears on **Co. Muster-out Roll,** dated Louisville Ky., Nov. 18, 1865.

Muster-out to date Nov. 18, 1865.

Last paid to Pay due from enlistment, 186 .

Clothing account:

Last settled ....., 186 ; drawn since $ 100

Due soldier $ 47 82/100; due U. S. $ 100

Am't for cloth'g in kind or money adv'd $ 100

Due U. S. for arms, equipments, &c., $ 100

Bounty paid $ ..... 100; due $ 100 00/100

Remarks: .....

.....

.....

.....

.....

.....

Book mark: .....

Galligan

(361) *Copyist.*

2003

Tarbell Reuben

Co D, 13 U.S.Col'd H. Art'y.

Private

CARD NUMBERS.

1	26
2	27
3 See Tarbell Reuben	
4	29
5	30
6	31
7	32
8	33
9	34
10	35
11	36
12	37
13	38
14	39
15	40
16	41
17	42
18	43
19	44
20	45
21	46
22	47
23	48
24	49
25	50

Book Mark

See also

2004

Paul. Jordon

Co. L, 13 U.S. Col'd H. Art'y.

Enlisted	Enlisted

CARD NUMBERS.

1	551869 1	26	
2	55179 62	27	
3	552442 7	28	
4	552458 4	29	
5	552473 4	30	
6	912 9808	31	
7		32	
8		33	
9		34	
10		35	
11		36	
12		37	
13		38	
14		39	
15		40	
16		41	
17		42	
18		43	
19		44	
20		45	
21		46	
22		47	
23		48	
24		49	
25		50	

Book Mark:

See also Co E. 121. N.S.L. Inf.

T

	13 H. Art'y.	U.S.C.T.

Jordan Faul

....., Co. D, 13 Reg't U. S. Col'd H. Art'y.

Appears on

Company Descriptive Book

of the organization named above.

DESCRIPTION.

Age 43 years; height 5 feet 8 inches.

Complexion Dark

Eyes Blk; hair Grey

Where born Fayette Co. Ky

Occupation Shoe Maker

ENLISTMENT.

When Oct 22, 1865.

Where Maysville Ky

By whom Capt Hart; term 3 y'rs.

Remarks:

E. E. Wilcomb

(388a) Copyist.

V | 13 H. Art'y. | U.S.C.T.

Jordon Paul

Pvt., Co. I, 13 Reg't U. S. Col'd H. Art'y.

Appears on

M. and D. Roll of Men Transferred

to the organization named above,

from C. E. 121 USC Inf

Roll dated Camp Nelson Ky June 23, 1865.

When enlisted 22 Apr, 1865.

Period for which enlisted 3 years.

When mustered in 4 May, 1865.

Present or absent Not stated

Company to which assigned

Remarks: Credit to Clerk Co.,
7 Dist Ky

Book mark :

J. Merchant

(342) *Copyist.*

I | 13 H. Art'y. | U.S.C.T.

Jordan Faul

Pvt., Co. ....., 13 Reg't U. S. Col'd H. Art'y.

Appears on

M. and D. Roll of Men Transferred

to the organization named above,

from Co....., 121 Reg't U. S. Colored Infantry.

Roll dated June 26, 1865

When enlisted Nov. 22, 1863

Period for which enlisted ..... 3 ..... years.

When mustered in May 4, 1865

Present or absent Not stated

Company to which assigned I

Remarks: Credited to Clark

Co. I D. Ky.

Book mark :

C. Williams,

(342) *Copyist.*

D | **13 H. Art'y.** | **U.S.C.T.**

Jordan David

R, Co. L, 13 Reg't U. S. Col'd H. Art'y.

Age ..... years.

Appears on

Company Muster Roll*

for June 30, 1865.

Joined for duty and enrolled:

When Apr. 22, 1865.

Where Maysville Ky

Period 3 years

Mustered in:

When May 4, 1865.

Where Greensburg Ky

Present or absent Present

Stoppage, $.....100 for .....

Due Gov't, $.....100 for .....

Valuation of horse, $.....100

Valuation of horse equipments, $.....100

Remarks: Due Def. for b. & G.E. 65 cts

* First current roll. No muster-in roll of this company on file.

Book mark: .....

R. Tilford

(3586) Copyist.

9 | 13 H. Art'y. | U.S.C.T.

Jordan Paul

Pvt., Co. I, 13 Reg't U. S. Col'd H. Art'y.

Appears on

Company Muster Roll

for Sept & Oct, 1865.

Present or absent Present

Stoppage, $.....100 for .....

.....

Due Gov't, $.....100 for .....

.....

Valuation of horse, $.....100

Valuation of horse equipments, $.....100

Remarks: .....

NEXT ROLL ON FILE MUSTER OUT.

.....

.....

.....

.....

.....

Book mark: .....

C. A. Wolf

Copyist.

13 H. Art'y. | U.S.C.T.

Corson, David

Pvt., Co. C, 13 Reg't U. S. Col'd H. Art'y.

Appears on **Co. Muster-out Roll,** dated Louisville Ky., June 8, 1865.

Muster-out to date June 8, 1865.

Last paid to June 30, 1865.

Clothing account:

Last settled ....., 186 ; drawn since $ 100

Due soldier $ ..... 100; due U. S. $ 93 50/100

Am't for cloth'g in kind or money adv'd $ 100

Due U. S. for arms, equipments, &c., $ 100

Bounty paid $ 100 00/100; due $ 100

Remarks: .....

Book mark: 303348

D. J. Corson

(361) Copyist.

2005

Taylor Emrich

Co F, 13 U.S.Col'd H. Art'y.

Private	Private

CARD NUMBERS.

1	[illegible]1[illegible]99	26	
2	[illegible]1[illegible]630	27	
3	[illegible]16708	28	
4	[illegible]207[illegible]2	29	
5	[illegible]20[illegible]94	30	
6	[illegible]21[illegible]057	31	
7	[illegible]212[illegible]07	32	
8	[illegible]213[illegible]4	33	
9	91282294	34	
10		35	
11		36	
12		37	
13		38	
14		39	
15		40	
16		41	
17		42	
18		43	
19		44	
20		45	
21		46	
22		47	
23		48	
24		49	
25		50	

Book Mark:

See also

5296189 Pond

13 H. Art'y. | U.S.C.T.

Durrill Taylor

....., Co. B, 13 Reg't U. S. Col'd H. Art'y.

Appears on

Company Descriptive Book

of the organization named above.

DESCRIPTION.

Age 33 years; height 5 feet 5 inches.

Complexion Dark

Eyes Dark; hair Dark

Where born Jefferson Co Ky

Occupation Laborer

ENLISTMENT.

When Nov 30, 1864.

Where Louisville Ky

By whom Capt Williams; term 3 y'rs.

Remarks: .....

Deadrick

(383*g*) *Copyist.*

T | **13** H. Art'y. | **U.S.C.T.**

Burrell Taylor

Appears with rank of Pvt on

Muster and Descriptive Roll of a Detachment of U. S. Vols. forwarded

for the 13 Reg't U. S. Col'd H. Art'y. Roll dated

Louisville, Ky, Nov. 30, 1864.

Where born Jefferson Kentucky

Age 33 y'rs; occupation Laborer

When enlisted Nov. 30, 1864.

Where enlisted Louisville, Ky

For what period enlisted 3 years.

Eyes dark; hair dark

Complexion dark; height 5 ft. 5 in.

When mustered in Nov. 30, 1864

Where mustered in Louisville, Ky

Bounty paid $ 100; due $ 100

Where credited Jefferson Co. 5th Dist.

Company to which assigned B.

Remarks:

Book mark:

Hammer

(339) *Copyist.*

F | 13 H. Art'y. | U.S.C.T.

Burrill Taylor

Appears with rank of Pvt on

Muster and Descriptive Roll of a Detachment of U. S. Vols. forwarded

for the 13 Reg't U. S. Col'd H. Art'y. Roll dated

Draft. Rendz. Louisville, Ky Dec. 6, 1864

Where born Jefferson

Age 33 y'rs; occupation Laborer

When enlisted Nov. 30, 1864.

Where enlisted Louisville

For what period enlisted 3 years.

Eyes Dark; hair Dark

Complexion Dark; height 5 ft. 5 in.

When mustered in Nov. 30, 1864.

Where mustered in Louisville

Bounty paid $ 100; due $ 100

Where credited 5 Dist Ky

Company to which assigned

Remarks:

Book mark:

Hammer

Copyist.

J 13 H. Aty. | **U.S.C.T.**

Burrill Taylor

Pvt., Co. B, 13 Reg't U. S. Col'd H. Aty.

Age ____ years.

Appears on

Company Muster Roll*

for Enlistment to Feb. 28, 1865.

Joined for duty and enrolled:

When Nov. 30, 1864.

Where Louisville, Ky.

Period 3 years.

Mustered in:

When Nov. 30, 1864.

Where Louisville, Ky.

Present or absent Present.

Stoppage, $ 100 for

Due Gov't, $ 100 for

Valuation of horse, $ 100

Valuation of horse equipments, $ 100

Remarks: Due $40.00, 1st installment Gait bounty.

*First current roll. No muster-in roll of this company on file.

Book mark:

Falconer

Copyist.

(3586)

J	13 H. Art'y.	U.S.C.T.

Russell Taylor

Vol., Co. B, 13 Reg't U. S. Col'd H. Art'y.

Appears on

Company Muster Roll

for March Apr., 1865.

Present or absent Absent

Stoppage, $ 100 for

Due Gov't, $ 100 for

Valuation of horse, $ 100

Valuation of horse equipments, $ 100

Remarks: Due $10 first installment Gait bounty. On detached service recruiting

Book mark:

Falconer

(358) *Copyist.*

J | 13 H. Art'y. | U.S.C.T.

Burrel Taylor

Pvt., Co. B, 13 Reg't U. S. Col'd H. Art'y.

Appears on

Company Muster Roll

for May & June, 1865.

Present or absent Present.

Stoppage, $ 100 for

Due Gov't, $ 100 for

Valuation of horse, $ 100

Valuation of horse equipments, $ 100

Remarks: Due first installment Gov't bounty

Book mark:

Falconer

Copyist.

13 H. Art'y. | U.S.C.T.

Burrill Taylor

Appears with rank of Pvt. on

Muster and Descriptive Roll of a Detachment of U. S. Vols. ~~forwarded~~ Organized as Co. B.

for the 13 Reg't U. S. Col'd H. Art'y. Roll dated

Camp Nelson June 23, 1865.

Where born Jeffersontown, Ky.

Age 33 y'rs; occupation Laborer

When enlisted Nov. 30, 1864.

Where enlisted Louisville, Ky.

For what period enlisted 3 years.

Eyes Dk.; hair Dk.

Complexion Dk.; height 5 ft. 5 in.

When mustered in Nov. 30, 1864.

Where mustered in Louisville, Ky.

Bounty paid $ 100; due $ 100

Where credited 1st Dist. Ky.

Company to which assigned B

Remarks:

Book mark:

Maynard

(339) Copyist.

J | 13 H. Art'y. | U.S.C.T.

Burrel Tayler

Pvt., Co. B, 13 Reg't U. S. Col'd H. Art'y.

Appears on

Company Muster Roll

for July & Aug., 1865.

Present or absent Absent.

Stoppage, $ 100 for

Due Gov't, $ 100 for

Valuation of horse, $ 100

Valuation of horse equipments, $ 100

Remarks: Due $100, first installment U.S. Gov't bounty. Absent on detached service.

NEXT ROLL ON FILE MUSTER OUT.

Book mark:

Falconer

(358) *Copyist.*

J | **13** H. Art'y. | **U.S.C.T.**

Burrill Taylor

Pvt., Co. B, 13 Reg't U. S. Col'd H. Art'y.

Appears on **Co. Muster-out Roll,** dated Louisville, Ky., Nov. 18, 1865.

Muster-out to date Nov. 18, 1865.

Last paid to June 30, 1865.

Clothing account:

Last settled ....., 186 ; drawn since $ 100

Due soldier $ ..... 100 ; due U. S. $ 5 61/100

Am't for cloth'g in kind or money adv'd $ 100

Due U. S. for arms, equipments, &c., $ 100

Bounty paid $ 100 100 ; due $ 100

Remarks: .....

.....

.....

.....

.....

.....

Book mark: .....

Zabriskie

(361) *Copyist.*

2906

Taylor Charles

Co S., 13 U.S.Col'd H. Art'y.

Private	Private

CARD NUMBERS.

1	5-5-1 7 2 4 3	26	
2	5-5-3 3 2 1 2.	27	
3	5-5-2 2 3 6 2	28	
4	5-5-2 2 5-1 1	29	
5	9 1 2 8 6 0 9	30	
6		31	
7		32	
8		33	
9		34	
10		35	
11		36	
12		37	
13		38	
14		39	
15		40	
16		41	
17		42	
18		43	
19		44	
20		45	
21		46	
22		47	
23		48	
24		49	
25		50	

Book Mark:

See also

13 H. Art'y. | U.S.C.T.

Charles Taylor

....., Co. D, 13 Reg't U. S. Col'd H. Art'y.

Appears on

Company Descriptive Book

of the organization named above.

DESCRIPTION.

Age 20 years; height 5 feet 10½ inches.

Complexion Black

Eyes black; hair black

Where born Monroe Co Kentucky

Occupation laborer

ENLISTMENT.

When May 19, 1863.

Where Clinton Ky

By whom Capt Fiddler; term 3 y'rs.

Remarks:

Deserted

(383g) Copyist.

I | 13 H. Art'y. | U.S.C.T.

Charles Gayler

Appears with rank of Pvt on

Muster and Descriptive Roll of a Detachment of U. S. Vols. ~~forwarded~~ Examined

for the 13 Reg't U. S. Col'd H. Art'y. Roll dated

Mt Vernon, ——, 186 .

Where born Monroe Co. Kentucky

Age 20 y'rs; occupation Laborer

When enlisted May 19, 1865.

Where enlisted Lebanon, Ky.

For what period enlisted 3 years.

Eyes Blk; hair Blk,

Complexion Blk; height 5 ft. 10½ in.

When mustered in May 22, 1865.

Where mustered in Lebanon, Ky.

Bounty paid $ 100; due $ 100

Where credited

Company to which assigned K

Remarks:

Book mark:

C. Gayler

(339) Copyist.

I | 13 H. Art'y. | U.S.C.T.

Charles Taylor

Appears with rank of ..... on

Muster and Descriptive Roll of a Detachment of U. S. Vols. forwarded

for the 13 Reg't U. S. Col'd H. Art'y. Roll dated

Lebanon Ky. May 24, 1865

Where born Marion Co. Ky.

Age 20 y'rs; occupation Laborer

When enlisted May 19, 1865

Where enlisted Lebanon Ky.

For what period enlisted 3 years.

Eyes Blk; hair Blk

Complexion Blk; height 5 ft. 11½ in.

When mustered in May 19, 1865

Where mustered in Lebanon Ky.

Bounty paid $ 100; due $ 100

Where credited 4th Cong. Dist.

Company to which assigned .....

Remarks: Master's name — Widow Francis Taylor. Residence — Marion Co. Ky. Without Consent.

Book mark: .....

Harris

(339) Copyist.

F 13112 | U.S.C.T.

Thaddeus Taylor

Pvt, Co. D, 13 Reg't U. S. Col'd Inf

Appears on

Company Muster Roll

for May & June, 1864.

Present or absent Present

Stoppage, $ 100 for

Due Gov't, $ 100 for

Valuation of horse, $ 100

Valuation of horse equipments, $ 100

Remarks: Was recruited Nov 9 A.D. 1863 by Lieut Grant Browning

FROM SECOND AUDITOR'S ROLL.

NEXT ROLL ON FILE MUSTER OUT.

Book mark:

Taylor

(358) *Copyist.*

13 H. Art'y. | U.S.C.T.

Charles Taylor

Pvt., Co. D, 13 Reg't U. S. Col'd H. Art'y.

Appears on **Co. Muster-out Roll,** dated Louisville Ky, June 8, 1865.

Muster-out to date June 8, 1865.

Last paid to June 30, 1865.

Clothing account:

Last settled ....., 186 ; drawn since $ 100

Due soldier $ ..... 100 ; due U. S. $ 100

Am't for cloth'g in kind or money adv'd $ 3 33 100

Due U. S. for arms, equipments, &c., $ 100

Bounty paid $ 100 100 ; due $ 100

Remarks: Mileage for Co. 9 E. $4.20

Book mark: P.M. 9 1614 April 3/66

Legeo

(361) *Copyist.*

2907

Taylor Charles

Co D, 13 U.S.Col'd H. Art'y.

Enlisted	Enlisted

CARD NUMBERS.

1	5 7 5 1 7 2 9 0	26	
2	5 7 5 1 2 2 2 2 9	27	
3	5 7 5 1 1 9 5 6 8	28	
4	5 7 5 1 2 2 5 6 0	29	
5	9 1 2 8 6 1 5	30	
6	4 3 1 5 3 8 6 0	31	
7		32	
8		33	
9		34	
10		35	
11		36	
12		37	
13		38	
14		39	
15		40	
16		41	
17		42	
18		43	
19		44	
20		45	
21		46	
22		47	
23		48	
24		49	
25		50	

Book Mark:

See also

I | 13th Infty | **U.S.C.T.**

Charles Taylor

....., Co. D, 13 Reg't U. S. Col'd Hvy

Appears on

Company Descriptive Book

of the organization named above.

DESCRIPTION.

Age 22 years; height 5 feet 3 inches.

Complexion Blk

Eyes Woolly; hair Blk

Where born Mississippi

Occupation Boatman

ENLISTMENT.

When Mar 16, 1863.

Where Springfield Ill

By whom Capt Ruff; term 3 y'rs.

Remarks: .....

Deadrick

(383g) **Copyist.**

I | 13 N. A | U.S.T.

Charles Taylor,

Appears with rank of Pvt on

Muster and Descriptive Roll

of a detachment of U.S. substitutes for Enrolled men.

forwarded. Roll dated

Springfield, Ills, March 16, 1865.

Where born Mississippi

Age 22 years; occupation Boatman

When enlisted Mar 16, 1865.

Where enlisted Springfield

For what period enlisted 3 years.

Eyes Blk; hair Wooly

Complexion Black; height 5 ft. 5 in.

When mustered in Mar 16, 1865.

Where mustered in Springfd

Bounty paid $ 100; due $ 100

Clothing account:

Last settled , 186 ; drawn ~~since~~ $48 75/100

Date of first muster in March 16, 1865.

Company to which assigned

Remarks: Principal Isaac Funk, credited to 8th Dist Ills Sub Dist 98, Funks Grove, McLean Co.

Mustered in for three (3) yrs as substitute.

Book mark :

W W Hall

(356m) Copyist.

S | 13 H. Art'y. | U.S.C.T.

Thares Taylor

Appears with rank of Pvt on

Muster and Descriptive Roll of a Detachment of U. S. Vols. ~~forwarded~~ Organized

for the 13 Reg't U. S. Col'd H. Art'y. Roll dated

Novr 64, , 186 .

Where born Mississippi

Age 22 y'rs; occupation Boatman

When enlisted Mar 16, 1865.

Where enlisted Springfield, Ills,

For what period enlisted 3 years.

Eyes Blk; hair Woolly

Complexion Blk; height 5 ft. 6 in.

When mustered in Mar 16, 1865.

Where mustered in Springfield, Ills.

Bounty paid $ 100; due $ 100

Where credited 5th Cong. Dist. Ills.

Company to which assigned K

Remarks: Deserted Apl. 3rd 1865

Book mark :

Thayler

(339) Copyist.

13 H. Art'y. | U.S.C.T.

Charles H. Taylor

Cpl, Co. D, 13 Reg't U. S. Col'd H. Art'y.

Age ..... years.

Appears on

Company Muster Roll*

for Oct 31, 1865.

Joined for duty and enrolled:

When Jan 16, 186 .

Where Winnisfield La

Period 3 years

Mustered in:

When Jan 16, 186 .

Where Winnisfield

Present or absent

Stoppage, $ 100 for

Due Gov't, $ 100 for

Valuation of horse, $ 100

Valuation of horse equipments, $ 100

Remarks: Deserted Smithland

Ky Apr 3rd 1865

* First current roll. No muster-in roll of this company on file.

Book mark:

Logan

(3588) Copyist.

Co. | 13 Kty | U.S.C.T.

Name of Soldier

Pvt., Co. D, 13 Reg't U. S. Col'd Inf'y

Appears on

Descriptive List of Deserters

dated May 19, 1865.

Deserted:

When April 3, 1865.

Where Smithland Ky

Arrested:

When ....., 186 .

Where .....

Remarks: .....

Book mark: .....

R Howard

(851) *Copyist.*

13 H. Art'y. **U.S.C.T.**

Charles Taylor

Pvt., Co. D, 13 Reg't U. S. Col'd H. Art'y.

Appears on **Co. Muster-out Roll,** dated Louisville Ky, Nov 18, 1865.

Muster-out to date ....., 186 .

Last paid to Pay due from enlistment, 186 .

Clothing account:

Last settled ....., 186 ; drawn since $ 100

Due soldier $ ..... 100 ; due U. S. $ 100

Am't for cloth'g in kind or money adv'd $ 100

Due U. S. for arms, equipments, &c., $ 100

Bounty paid $ ..... 100 ; due $ 100

Remarks: Deserted

Co. D. 13 Col. Inf. Smithland Ky

Book mark: .....

---

(361) Copyist.

Taylor Charles

P, Co. D, 13 Reg't USC. HA

2 **Enclosures.**

Bed Cards	Final Statements
Burial Records	Furloughs or L. of A.
Certs. of Dis. for Discharge	Med. Certificates
C. M. Charges	Med. Des. Lists
Descriptive Lists	Orders
Discharge Certificates	Pris. of War Record
Enlistment Papers 2	Resignations

Other papers relating to—

Admission to Hosp'l	Furlough or L. of A.
Casualty Sheet	Med. Examination
Confinement	Misc. Information
Contracts	Pay or Clothing
Death or Effects	Personal Reports
Desertion	Rank
Discharge from Hosp'l	Transfer to Hosp'l
Discharge from Service	Transfer to V. R. C.
Duty	Transportation

DECLARATION OF SUBSTITUTE.

I, Charles Taylor desiring to ENLIST in the **Army of the United States**, for THREE YEARS, ***Do declare,*** That I am twenty two years and _____ months of age; that I have never been discharged from the United States service on account of disability or by sentence of a court martial; and I know of no impediment to my serving honestly and faithfully as a soldier for three years.

GIVEN at Springfield Illinois

the 11 day of March 1865

WITNESS:

L. F. Tarum

Chas his Taylor
mark

9

No. _____

Enlisted at Springfield

As Substitute for

Peace Co.

On the 11 day of March, 186 5.

By

Capt Co.

Board of Enrollment,

1 Dist. of

2

(No. 39.)

SUBSTITUTE

VOLUNTEER ENLISTMENT.

STATE OF Illinois TOWN OF Springfield

I, Charles Taylor born in the State of Massachusetts, aged Twenty Four years, and by occupation a Boot & Shoe Finisher DO HEREBY ACKNOWLEDGE to have agreed with Isaac C. Funk, Esq., of Funks Grove McLean County Illinois to become his **SUBSTITUTE** in the Military Service, for a sufficient consideration paid and delivered to me, on the Sixteenth day of March, 186 5; and having thus agreed with said Isaac Funks, I DO HEREBY ACKNOWLEDGE to have enlisted this Sixteenth day of March, 186 , to serve as a ***Soldier*** in the **Army of the United States of America,** for the period of *THREE YEARS*, unless sooner discharged by proper authority: I do also agree to accept such bounty, pay, rations, and clothing, as are, or may be, established by law for soldiers. And I do solemnly swear that I will bear true and faithful allegiance to the ***United States of America;*** that I will serve them honestly and faithfully against all their enemies or opposers whomsoever; and that I will observe and obey the orders of the President of the United States, and the orders of the Officers appointed over me, according to the Rules and Articles of War.

SWORN and subscribed to, at Springfield this 16 day of March 1865.

BEFORE Lacey Key Capt. Provost Marshal

Charles Taylor

mark

We certify, on honor, That we have carefully examined the above-named Volunteer Substitute agreeably to the Regulations, and that, in our opinion, he is free from all bodily defects and mental infirmity which would in any way disqualify him from performing the duties of a soldier; that he was entirely sober when enlisted; that he is of lawful age, (not under 18 years;) and that, in accepting him as duly qualified to perform the duties of an able-bodied soldier, and as a Substitute in lieu of Wesley Funk Enrolled, ~~drafted~~ in Funks Grove 7th Dist McLean Co Ills, 186 , we have strictly observed the Regulations which govern in such cases. This soldier has Black eyes, Woolly hair, Black complexion; is 5 feet 5 inches high.

Lacey Key

Provost Marshal.

H. S. Duffy

Commissioner of Board.

E. R. Babcock

Surgeon of Board.

Board of Enrollment of ____ *Dist. of* ____.

DECLARATION OF SUBSTITUTE.

I, Charles Taylor desiring to ENLIST in the **Army of the United States,** for **THREE YEARS**, ***Do declare,*** That I am Twenty Two years and _____ months of age; that I have never been discharged from the United States service on account of disability or by sentence of a court martial; and I know of no impediment to my serving honestly and faithfully as a soldier for three years.

GIVEN at Springfield Ills
the 16th day of March 1865

WITNESS: M E Vanour

his
Charles Taylor
mark

I

No. _____

Charles Taylor
Enlisted at Springfield Ills
March 16 1865

As Substitute for

Isaac Stumk

On the 16th day of March, 1865.

By

Capt. Dr Quackenbush
Mo of Quinsey
Lieut. Col. Commdg
Camp Butler

Board of Enrollment,
5th Dist. of Illinois

2

(No. 39.)

SUBSTITUTE

VOLUNTEER ENLISTMENT.

STATE OF Illinois TOWN OF Springfield

I, Charles Taylor born in the State of Mississippi aged Twenty Two years, and by occupation a Boatman DO HEREBY ACKNOWLEDGE to have agreed with Isaac Funk, Esq., of Funks Grove McLean Co Illo.

to become his **SUBSTITUTE** in the Military Service, for a sufficient consideration paid and delivered to me, on the Sixteenth day of March, 1865; and having thus agreed with said Isaac Funk, I DO HEREBY ACKNOWLEDGE to have enlisted this Sixteenth day of March, 1865, to serve as a ***Soldier*** in the **Army of the United States of America,** for the period of *THREE YEARS*, unless sooner discharged by proper authority: I do also agree to accept such bounty, pay, rations, and clothing, as are, or may be, established by law for soldiers. And I do solemnly swear that I will bear true and faithful allegiance to the ***United States of America;*** that I will serve them honestly and faithfully against all their enemies or opposers whomsoever; and that I will observe and obey the orders of the President of the United States, and the orders of the Officers appointed over me, according to the Rules and Articles of War.

SWORN and subscribed to, at Springfield Ills this 16" day of March 1865. BEFORE Leeeeley Capt & Pro Mar 8th Dist Ills

Charles Taylor

Witness
W. F. Thomas

We certify, on honor, That we have carefully examined the above-named Volunteer Substitute agreeably to the Regulations, and that, in our opinion, he is free from all bodily defects and mental infirmity which would in any way disqualify him from performing the duties of a soldier; that he was entirely sober when enlisted; that he is of lawful age, (not under 18 years;) and that, in accepting him as duly qualified to perform the duties of an able-bodied soldier, and as a Substitute in lieu of Isaac Funk Enrolled, ~~drafted~~ in Funks Grove McLean Co Ills 186, we have strictly observed the Regulations which govern in such cases. This soldier has Black eyes, Wooly hair, Black complexion; is 5 feet 5 inches high.

Leeeeley
Provost Marshal.

H. D. Canty
Commissioner of Board.

E. R. Babcock
Surgeon of Board.

Board of Enrollment of 8" *Dist. of* Illinois

2008

Taylor. Charles

Co. C, 13 U.S.Col'd H. Art'y.

Private	Private

CARD NUMBERS.

1	5-5-16227	26	
2	5-5-16239	27	
3	5-5-22714	28	
4	5-522858	29	
5	5-522996	30	
6	912827	31	
7		32	
8		33	
9		34	
10		35	
11		36	
12		37	
13		38	
14		39	
15		40	
16		41	
17		42	
18		43	
19		44	
20		45	
21		46	
22		47	
23		48	
24		49	
25		50	

Book Mark:

See also

D. 302352 and wf

Yours truly

J | 13 H. Art'y. | U.S.C.T.

Charles Taylor

....., Co. E, 13 Reg't U.S. Col'd H. Art'y.

Appears on

Company Descriptive Book

of the organization named above.

DESCRIPTION.

Age 44 years; height 6 feet 3 inches.

Complexion Black

Eyes Blk; hair Blk

Where born Cassumine County

Occupation Farmer

ENLISTMENT.

When Sept 21, 1863.

Where Louisville

By whom Capt Womack; term 3 y'rs.

Remarks:

Beach

(383g) Copyist.

I | 13 H. Art'y. | U.S.C.T.

Chas Taylor

Appears with rank of Pvt on

Muster and Descriptive Roll of a Detachment of U. S. Vols. forwarded

for the 13 Reg't U. S. Col'd H. Art'y. Roll dated

Louisville Ky, Apl 21, 1865.

Where born Jefferson Co Ky

Age 44 y'rs; occupation Farmer

When enlisted Apl 21, 1865.

Where enlisted Louisville Ky

For what period enlisted 3 years.

Eyes blk; hair blk

Complexion blk; height 6 ft. 3 in.

When mustered in Apl 21, 1865.

Where mustered in Louisville Ky

Bounty paid $ 100; due $ 100

Where credited Shelby Co 4 Distby

Company to which assigned

Remarks:

Book mark:

Rose

(339) Copyist.

I | 13 H. Art'y. | U.S.C.T.

Charles Taylor

Appears with rank of Pvt on

Muster and Descriptive Roll of a Detachment of U. S. Vols. forwarded

for the 13 Reg't U. S. Col'd H. Art'y. Roll dated

Draft Rendezvous Apl 22, 1865.

Where born Louisville Ky Jessamine Cty

Age 44 y'rs; occupation Farmer

When enlisted Apl 21, 1865.

Where enlisted Louisville Ky

For what period enlisted 3 years.

Eyes Black; hair Black

Complexion Black; height 6 ft. 3 in.

When mustered in Apl 21, 1865.

Where mustered in Louisville Ky

Bounty paid $ 100; due $ 100

Where credited 4th Dist Ky

Company to which assigned

Remarks:

Book mark:

Rose

(339) Copyist.

F | **13 H. Art'y.** | **U.S.C.T.**

Charles Taylor

Put, Co. E., 13 Reg't U. S. Col'd H. Art'y.

Age ..... years.

Appears on

Company Muster Roll*

for May & June, 186 5.

Joined for duty and enrolled:

When Apr. 21, 186 5.

Where Louisville, Ky.

Period 3 years

Mustered in:

When Apr. 21, 186 5.

Where Louisville, Ky.

Present or absent Present.

Stoppage, $ 100 for .....

Due Gov't, $ 100 for .....

Valuation of horse, $ 100

Valuation of horse equipments, $ 100

Remarks: .....

* First current roll. No muster-in roll of this company on file.

Book mark: .....

(3586) *Copyist.*

T | 13 H. Art'y. | U.S.C.T.

Charles Taylor

Pvt, Co. E, 13 Reg't U. S. Col'd H. Art'y.

Appears on

Company Muster Roll

for July & Aug., 1865.

Present or absent Present.

Stoppage, $ 100 for

Due Gov't, $ 100 for

Valuation of horse, $ 100

Valuation of horse equipments, $ 100

Remarks: 1st. Inst. of bounty due $100. Stoppages Clothing 95 cts.

NEXT ROLL ON FILE MUSTER OUT.

Book mark:

A C Davis

Copyist.

T | 13 H. Art'y. | U.S.C.T.

Charles Taylor

Pvt., Co. C., 13 Reg't U. S. Col'd H. Art'y.

Appears on **Co. Muster-out Roll,** dated Louisville, Ky., Nov. 16, 1865.

Muster-out to date Nov 16, 1865.

Last paid to June 30 1865.

Clothing account:

Last settled ....., 186 ; drawn since $ 100

Due soldier $ ....100; due U. S. $ 1 9 — 38 100

Am't for cloth'g in kind or money adv'd $ 100

Due U. S. for arms, equipments, &c., $ 100

Bounty paid $ ....100; due $ 100

Remarks: Stoppage / Lavereack 95 cents.

Book mark :

D C Davis

(361) *Copyist.*

Taylor, Charles

, Co. E 13 Reg't U.S.C.H.A.

1 Inclosures.

Bed Cards	Final Statements
Burial Records	Furloughs or L. of A
Certs. of Dis. for Discharge	Med. Certificates
C. M. Charges	Med. Des. Lists
Descriptive Lists	Orders
Discharge Certificates	Pris. of War Record
Enlistment Papers 1	Resignations

Other papers relating to—

Admission to Hosp'l	Furlough or L. of A.
Casualty Sheet	Med. Examination
Confinement	Misc. Information
Contracts	Pay or Clothing
Death or Effects	Personal Reports
Desertion	Rank
Discharge from Hosp'l	Transfer to Hosp'l
Discharge from Service	Transfer to V. R. C.
Duty	Transportation

NOTE 1.—This blank will be used for enlistments of United States colored troops. They will be made out in duplicate in all cases—one to accompany the return of the superintendent (not the recruiting officer) to the Adjutant General, and one to accompany the accounts of the officer who pays bounty, &c.

NOTE 2.—An enlistment holds to service. A muster-in must, in all cases, precede payment of pay, bounty, pension, &c. A muster-in roll, must in all cases, be filed in the Adjutant General's Office as evidence of muster-in. The mustering officer, commissary, or assistant commissary of musters, as the case may be, will countersign both enlistments as having mustered the soldiers into the service of the United States before either of them is given to the disbursing officer.

DECLARATION OF RECRUIT.

I, ... Chas. Taylor ..... desiring to volunteer as a soldier in the ARMY OF THE UNITED STATES, for the term of *Three Years*, DO DECLARE That I am ..... years and ..... months of age; that I have never been discharged from the United States service on account of disability or by sentence of a court-martial, or by order before the expiration of a term of enlistment; and I know of no impediment to my serving honestly and faithfully as a soldier for three years.

GIVEN at ..... Louisville Ky .....

the ..... 21 ..... day of ..... April 1861

Witness:

Geo. O. Cole .....

Chas. his Taylor
mark

Volunteered at Louisville Ky
Apr 21 1861
By Lt. Hancock
Cole & Pea. Inf.
5-Dec-17.

Chas Taylor
Charles Taylor
No. 1553
65
Co. H
30
1 4 3

Consent of Parent or Guardian in case of a Minor, if a Free Man, or in the case of a Slave, of the Person to whom he owes Service:

I, ... DO CERTIFY, That I am

the ....

....

that the said ..... is .... years of age; and I do freely give my CONSENT to his volunteering as a SOLDIER in the Army of the United States, for the period of THREE YEARS, under the conditions of the laws of the United States.

GIVEN at .....

the ..... day of .....

Witness:

....

(A. G. O. No. 74 & 76.)

UNITED STATES COLORED TROOPS ENLISTMENT.

STATE OF Kentucky TOWN OF ~~TOWN~~ County S Shelby

I, Chas. Taylor born in Jessamine Co

in the State of Kentucky aged 44 years

and by occupation a Farmer Do HEREBY ACKNOWLEDGE to

have volunteered 21 day of April 1865

to serve as a **Soldier** in the **Army of the United States of America,** for the period of THREE YEARS, unless sooner discharged by proper authority: Do also agree to accept such bounty, pay, rations, and clothing, as are, or may be, established by law for the U. S. colored troops.

And I, Chas. Taylor

do solemnly swear that I will bear true faith and allegiance to the **United States of America,** and that I will serve them honestly and faithfully against all their enemies or opposers whomsoever; and that I will observe and obey the orders of the President of the United States, and the orders of the officers appointed over me, according to the Rules and Articles of War.

Sworn and subscribed to, at Louisville Ky

this 24 day of April 1865

Before L. M. Manack

Capt. & Pro. Mar. 5 Dist Ky

his
Chas x Taylor
mark

I CERTIFY, ON HONOR, That I have carefully examined the above named Volunteer agreeably to the General Regulations of the Army, and that, in my opinion, he is free from all bodily defects and mental infirmity, which would in any way disqualify him from performing the duties of a soldier.

J. Gardner

EXAMINING SURGEON.

I CERTIFY, ON HONOR, That I have minutely inspected the Volunteer, Taylor previously to his enlistment, and that he was entirely sober when enlisted; that, to the best of my judgment and belief, he is of lawful age; and that, in accepting him as duly qualified to perform the duties of an able-bodied soldier, I have strictly observed the regulations which govern the recruiting service. This soldier has Blk *eyes*, Blk *hair*, ... *complexion*, is 6 *feet* 3 *inches* high.

L. M. Manack

Pro Mar & RECRUITING OFFICER OR AGENT.

Mustered into the United States Service 21 day of April 186 5

L. M. Manack

Pro Mar & Mustering Officer.

B. Thompson

Mustered into the service of the United States, for three years or during the war, from date of enlistment, in Company ..... Regiment of ..... Volunteers, on the ..... day of ....., 186 , at .....

2009

Taylor Charles

Co M, 13 U.S.Col'd H. Art'y.

Private	Private

CARD NUMBERS.

1	55188553	26	
2	551914 1	27	
3	552565 6	28	
4	552803	29	
5	551962 6	30	
6	552596 1	31	
7	91296661	32	
8		33	
9		34	
10		35	
11		36	
12		37	
13		38	
14		39	
15		40	
16		41	
17		42	
18		43	
19		44	
20		45	
21		46	
22		47	
23		48	
24		49	
25		50	

Book Mark:

See also Leo E. 72 USC Inf.

I V 3 Hvy U.S.C.T.

Charles Taylor

....., Co. H, 13 Reg't U. S. Col'd Hvy

Appears on

Company Descriptive Book

of the organization named above.

DESCRIPTION.

Age 21 years; height 5 feet 8 inches.

Complexion Dk

Eyes Dk; hair Dk

Where born Ills.

Occupation Farmer

ENLISTMENT.

When Aug. 4, 1865.

Where Covington Ky

By whom Capt Mitchell, term 3 y'rs.

Remarks: Deserted

1865

E of Leacock

(383*g*) *Copyist.*

T | 13 H. Art'y. | U.S.C.T.

Charles Taylor

Pvt., Co. M, 13 Reg't U. S. Col'd H. Art'y.

Appears on

M. and D. Roll of Men Transferred

to the organization named above,

from Co E 72 U S Col Inf

Roll dated July 3, 1865.

When enlisted Apl 4, 1865.

Period for which enlisted 3 years.

When mustered in Apl 4, 1865.

Present or absent Not stated

Company to which assigned

Remarks: Credited to Kenton Co S.D.1, 6th D. Ky

Book mark: R 2251 Ky

J Underwood

(342) *Copyist.*

I | 13 H. Art'y. | U.S.C.T.

Charles Taylor

Pvt, Co....., 13 Reg't U. S. Col'd H. Art'y.

Appears on

M. and D. Roll of Men Transferred

to the organization named above,

from 12 N.Y.C.I

Roll dated July 8, 1865.

When enlisted Apl 4, 1865.

Period for which enlisted 3 years.

When mustered in Apl 4, 1865.

Present or absent not stated

Company to which assigned M

Remarks:

6 Dist. Ky.

Book mark :

J Underwood

(342) *Copyist.*

J | 13 H. Art'y. | U.S.C.T.

Charles Taylor

Pvt, Co. M, 13 Reg't U. S. Col'd H. Art'y.

Age ..... years.

Appears on

Company Muster Roll*

for June 23 to 30, 1865.

Joined for duty and enrolled:

When Ap 4, 1865.

Where Covington Ky

Period 3 years

Mustered in:

When Ap 4, 1865.

Where Covington Ky

Present or absent Present

Stoppage, $ 100 for .....

Due Gov't, $ 100 for .....

Valuation of horse, $ 100

Valuation of horse equipments, $ 100

Remarks: .....

* First current roll. No muster-in roll of this company on file.

Book mark: .....

Abbott

(3586) Copyist.

J | 13 H. Art'y. | U.S.C.T.

Charles Taylor

Pvt, Co. M, 13 Reg't U. S. Col'd H. Art'y.

Appears on

Company Muster Roll

for July & Aug, 1865.

Present or absent Present

Stoppage, $ 100 for

Due Gov't, $ 100 for

Valuation of horse, $ 100

Valuation of horse equipments. $ 100

Remarks:

NEXT ROLL ON FILE MUSTER OUT.

Book mark:

Abbott

(358) Copyist.

Chas. H. Harry U.S.C.T.

of

Charles Taylor

Prt., Co. M, 13 Reg't U. S. Col'd Hvy

Appears on

Descriptive List of Deserters

dated Sept 30, 1865.

Deserted:

When Sept 13, 1865,

Where Cumberland, Md

Arrested:

When ....., 186 .

Where .....

Remarks: .....

Book mark: .....

Chas. H. Harry

(351) *Copyist.*

I | 13 H. Art'y. | U.S.C.T.

Charles Taylor

Pvt, Co. M, 13 Reg't U. S. Col'd H. Art'y.

Appears on **Co. Muster-out Roll,** dated Louisville Ky, Nov 18, 1865.

Muster-out to date ....., 186 .

Last paid to June 30, 1865.

Clothing account:

Last settled ....., 186 ; drawn since $ 100

Due soldier $ ..... 100; due U. S. $ 100

Am't for cloth'g in kind or money adv'd $ 100

Due U. S. for arms, equipments, &c., $ 100

Bounty paid $ 100 100; due $ 100

Remarks: Deserted
Stoppage 6 4 6 & Cost $10.32

Book mark: .....

Abbott

(361) *Copyist.*

Taylor, Chas.

L, Co. M, 13 Regt U.S.C.H.A.

1 Enclosures.

Bed Cards	Descriptive Lists
Burial Records	Final Statements
Certs. of Dis. for Discharge	Furloughs
C. M. Charges	Med. Des. Lists
Med. Certificates	Orders

Other papers relating to—

Admission to Hosp'l	Furlough
Casualty Sheet (Officer's)	Med. Examination
Confinement	Misc. Information /
Contracts	Pay or Clothing
Death or Effects	Personal Reports
Desertions	Rank
Discharge from Hosp'l	Transfer to Hosp'l
Discharge from Service	Transfer to V. R. C.
Duty	Transportation

MICROFILM PUBLICATION M 1834

COMPILED MILITARY SERVICE RECORDS
OF VOLUNTEER UNION SOLDIERS WHO SERVED WITH
THE UNITED STATES COLORED TROOPS (USCT)
13TH REGIMENT OF HEAVY ARTILLERY

PERSONAL PAPERS' TARGET SHEET

PLEASE NOTE THE CHECKED INFORMATION ABOUT THE PERSONAL PAPERS IN THIS FILE:

☐ NO PERSONAL PAPERS WERE FOUND IN THIS FILE WHEN THE RECORDS WERE ARRANGED FOR MICROFILMING.

☒ 3 PERSONAL PAPER(S) FOUND IN THIS FILE WHEN THE RECORDS WERE ARRANGED FOR MICROFILMING.

ENDORSEMENT.

No. _____

Application of

Cuzzens Mc. Parris

of Paris Bourbon Ky

for compensation for service of Slave

Charles Taylor

enlisted 186

in 7th Co. 5th Ky Regiment,

U. S. Colored Troops.

Received. March 15 186 /

compensation awarded

186

Dollars.

President Board of Claims.

P. O. Address of Applicant:

Paris

Ky

Attorney for Claimant.

R. 2385 Ky

War Department,

ADJUTANT GENERAL'S OFFICE,

Washington April 12 1864.

Respectfully returned to the Commission for the State of Kentucky, with the information that Charles Taylor was enlisted at Covington Ky. April 14, 1865 and was mustered in as Private Co. "M" 12th U. S. Col'd (Heavy) April 4, 1865.

By

T. C. S. Kaggard

Asst. Adj't General.

WHL

Headquarters Kentucky Volunteers,

Adjutant-General's Office,

Frankfort, November 6th, 1864.

I hereby certify, that it appears from the U. S. Muster-In Rolls on file in this Office, that Charles Taylor was enrolled on the 4th day of April, 1865, at Covington Ky, by Maj Mitchell, and mustered into the U. S. service on the 4th day of April, 1865, at Covington Ky, by Maj Mitchell, to serve three years. Said Charles Taylor is described as follows: 21 years age, Black eyes, Black hair, Black complexion, 5 ft 8 ins height. It further appears from said Rolls, that Charles Taylor was credited to Kenton County Ky and owed service to Jack Rankins and was assigned to Company "D" 13th U. S. C. Artillery (Heavy)

In Testimony Whereof, I have hereunto set my hand, and affixed my Official Seal, this 6th day of November, 1864.

D. W. Lindsay

Adjutant General of Kentucky.

B. — R 818

PROOF OF OWNERSHIP.

STATE OF KENTUCKY,
COUNTY OF Bourbon } ss.

ON THIS 13th day of November 1866, personally appeared before me, the undersigned, in and for the County and State aforesaid, Edwin W Rankins, a citizen of Paris, County and State aforesaid, and Mason C Arnold a citizen of, Paris, County and State aforesaid, both of whom I certify to be respectable and worthy of credit, and after being duly sworn according to law, on oath state that they have examined the claim of Cassandra M Rankins, for pay for Charles Taylor a slave Mustered into the service of the U. S., that they are and have been for Six years personally acquainted with Cassandra M Rankins, the applicant. That the said Charles Taylor slave belonged to and was the legal property of Cassandra M Rankins, the said claimant, and was so at the alleged time of enlistment in Company "M" 13th Regt. U. S. C. Artillery (Heavy)

Edwin W Rankins
Mason C. Arnold

Sworn to and subscribed before me, this 13th day of November 1866.

P McHughes C. B. C. C.

State of Kentucky,
County of Bourbon } ss.

I, Edwin W Rankins, a citizen of Paris County and State aforesaid, and I, Mason C Arnold, citizen of Paris County and State aforesaid, state that we have known Cassandra M Rankins for Six years, that she is a resident of Bourbon ——, County and State aforesaid, and that he (or she) has firmly and faithfully maintained his (or her) adherence and allegiance to the government of the United States, by defending its cause against the government and forces of the so-called Confederate States of America, in all suitable and practicable ways according to his or her ability and opportunity.

Edwin W. Rankins
Mason C. Arnold

Sworn to and subscribed before me, this 13th day of November 1866.

P McHughes Clk
Bourbon County Court

NOTE.—If the affidavit is made before a magistrate, the official character of the magistrate must be authenticated by the proper clerk. If the claimant has a bill of sale from a previous owner, it must accompany the application.

Claim for Compensation for Slave.

No. ----------

I, Cassandra M Rankins of the County of Bourbon State of Kentucky hereby claim Compensation under the provisions of Section 24, Act approved February 24, 1864, and Section 2, Act approved July 28, 1866, for my Slave Rebecca Taylor enlisted 4th of April 1865, at Lexington Ky by Maj Mitchell Asst Adjt Genl in the 13th Regiment United States Colored Troops, Company M, certificate of which enlistment and descriptive roll,

as required, accompany this application. In proof of my loyalty to the Constitution and Government of the United States, I present the accompanying Oath, which I have taken, signed and acknowledged; to be filed with this application, in accordance with requirements of General Orders No. 329, 1863, War Department, Adjutant General's Office.

Cassandra M Rankins

186

OATH OF ALLEGIANCE.

I, Cassandra Rankin the owner and claimant, do solemnly swear the foregoing claim is a just and true claim due to me as owner of the said Slave

and that the facts alleged in said claim in respect to the enlistment of said Slave into the military service of the United States are true. And I do further swear that I have never joined, *or been concerned in, any insurrection* or rebellion; *that I have never borne arms* against the United States; *that I have never given any aid, countenance, counsel or encouragement*, to any person or persons engaged, or whom I had reason to believe were about to engage, in insurrection, rebellion, or armed hostility *against* the United States; that I have never sought nor accepted, nor attempted to exercise the functions of any office, civil or military, nor to perform any service whatever under any authority or pretended authority in hostility to the United States; that I have not yielded a voluntary support to any insurrection, rebellion or pretended government, authority, power or constitution within the United States, hostile thereto. And I do further swear that to the best of my knowledge and ability, I have supported and defended and will continue to support and defend the United States, *against all enemies, foreign and domestic; and that I have supported, defended and obeyed, and will continue to support, defend and obey, the Constitution and Laws of the United States;* that I will bear true faith and allegiance to the same; and that I take this Oath freely, without any mental reservation or purpose of evasion: So help me God.

Cassandra M Rankins

Sworn to and subscribed before me at Paris Ky this 18th day of February 1867

H M Hawker Notary Public

2010

Taylor, Samuel

Co ....., 13 U.S.Col'd H.Art'y.

Private | Private

CARD NUMBERS.

1	55/9213	26	
2		27	
3		28	
4		29	
5		30	
6		31	
7		32	
8		33	
9		34	
10		35	
11		36	
12		37	
13		38	
14		39	
15		40	
16		41	
17		42	
18		43	
19		44	
20		45	
21		46	
22		47	
23		48	
24		49	
25		50	

Book Mark .....

See also 72.28 Cav Inf

I | 13 H. Art'y. | U.S.C.T.

Daniel Taylor

Pvt., Co....., 13 Reg't U. S. Col'd H. Art'y.

Appears on

M. and D. Roll of Men Transferred

to the organization named above,

from Camp Casey

Roll dated July 3, 1865.

When enlisted Feb 9, 1865.

Period for which enlisted 3 years.

When mustered in Feb 9, 1865.

Present or absent .....

Company to which assigned C

Remarks: Desd March 16/65.

Not taken up on rolls of Regt.

Book mark : .....

J Vredenburgh

(342) *Copyist.*

2011

Taylor Frederick

Co S., 13 U.S.Col'd H. Art'y.

Private	Private

CARD NUMBERS.

1	5-5-17275	26	
2	5-5-15936	27	
3	5-5-15933	28	
4	5-5-15994	29	
5	5-5-22087	30	
6	5-5-22393	31	
I	5-5-19595-	32	
8	5-5-22567	33	
9	9128614	34	
10		35	
11		36	
12		37	
13		38	
14		39	
15		40	
16		41	
17		42	
18		43	
19		44	
20		45	
21		46	
22		47	
23		48	
24		49	
25		50	

Book Mark:

See also

L | 13 H Arty | **U.S.C.T.**

Frederick Taylor

....., Co. D, 13 Reg't U. S. Col'd H Arty

Appears on

Company Descriptive Book

of the organization named above.

DESCRIPTION.

Age 18 years; height 5 feet 5½ inches.

Complexion BLK

Eyes BLK; hair Mulatto

Where born Illinois

Occupation Student

ENLISTMENT.

When March 16, 1863.

Where Chicago Ill.

By whom Capt James; term 1 y'rs.

Remarks: Deserted

Deadrick

(383½) **Copyist.**

	13 H. Art'y.	U.S.C.T.

Fred Taylor

Appears with rank of Cpl on

Muster and Descriptive Roll of a Detachment of U. S. Vols. ~~forwarded~~ Organized

for the 13 Reg't U. S. Col'd H. Art'y. Roll dated

Not dated, , 186 .

Where born Illinois

Age 18 y'rs; occupation Student

When enlisted Mar 16, 1863.

Where enlisted Chicago, Ill.

For what period enlisted 1 years.

Eyes Blk; hair Blk

Complexion Mulatto; height 5 ft 3 1/2 in.

When mustered in Mar 16, 1863.

Where mustered in Chicago Ill,

Bounty paid $ 100; due $ 100 00

Where credited Cong. Dist. Ill,

Company to which assigned A.

Remarks: Deserted June 7th 1865

Book mark:

Taylor

Copyist.

I | 13 H. Art'y. | U.S.C.T.

Frederick Taylor

Appears with rank of Pvt on

Muster and Descriptive Roll of a Detachment of U. S. Vols. forwarded

for the 13 Reg't U. S. Col'd H. Art'y. Roll dated

Chicago Ill, Mch 16, 1865.

Where born Illinois

Age 18 y'rs; occupation Student

When enlisted Mch 16, 1865.

Where enlisted Chicago Ill

For what period enlisted 1 years.

Eyes Dk; hair Dk

Complexion Mulatto; height 5 ft. 9½ in.

When mustered in Mch 16 1865.

Where mustered in Chicago Ill

Bounty paid $ 100; due $ 100

Where credited Chicago Cook Co Ill
1 Dist 34 Sub Dist.

Company to which assigned

Remarks:

Book mark:

Rose

(339) Copyist.

F 1/3 Artly | **U.S.C.T.**

Frederick Taylor

Appears with rank of Pvt on

Muster and Descriptive Roll of a Detachment of U. S. Vols. forwarded

for the 13 Reg't U. S. Col'd Artly Roll dated

Chicago Ill, March 16, 1865.

Where born Ill

Age 18 y'rs; occupation Student

When enlisted March 16, 1865.

Where enlisted Chicago Ill

For what period enlisted 1 years.

Eyes Drk; hair Drk

Complexion Mulatto; height 5 ft. 9½ in.

When mustered in March 16, 1865.

Where mustered in Chicago Ill

Bounty paid $ 100; due $ 100

Where credited Chicago Cook Co Ill
1 Dist 3d Sub Dist

Company to which assigned

Remarks:

Book mark:

Rose

(339) *Copyist.*

T | 13 H. Art'y. | U.S.C.T.

Frederick A Taylor

Appears with rank of Pvt on

Muster and Descriptive Roll of a Detachment of U. S. Vols. forwarded

for the 13 Reg't U. S. Col'd H. Art'y. Roll dated

Camp Butler Ill, Mch 23, 1865.

Where born Illinois

Age 18 y'rs; occupation Student

When enlisted Mch 16, 1865.

Where enlisted Chicago Ill

For what period enlisted 1 years.

Eyes Dk; hair Dk

Complexion Mulat; height 5 ft. 9½ in.

When mustered in Mch 16, 1865.

Where mustered in Chicago Ill

Bounty paid $ 100; due $ 100 100

Where credited Chicago Cook Co Ill 1 Dist 3d S.D.

Company to which assigned

Remarks:

Book mark:

Rose

(339) *Copyist.*

F | **13 H. Art'y.** | **U.S.C.T.**

Frederick Engle

Sergt., Co. D, 13 Reg't U. S. Col'd H. Art'y.

Age ..... years.

Appears on

Company Muster Roll*

for Jan 30, 1865.

Joined for duty and enrolled:

When March 16, 1865.

Where Chicago Ill

Period 1 years

Mustered in:

When March 16, 1865.

Where Chicago Ill

Present or absent Present

Stoppage, $ 100 for .....

Due Gov't, $ 100 for .....

Valuation of horse, $ 100

Valuation of horse equipments, $ 100

Remarks: Bounty due $100.00 Cfs

Promoted Sergt April 11th 1865

* First current roll. **No muster-in roll of this company on file.**

Book mark: .....

13586 Copyist.

F | 1324a | U.S.C.T

Fred Taylor

Pvt., Co. D, 13 Reg't U. S. Col'd H.A.

Appears on

Company Muster Roll

for May & June, 1865.

Present or absent

Stoppage, $ 100 for

Due Gov't, $ 100 for

Valuation of horse, $ 100

Valuation of horse equipments, $ 100

Remarks: Deserted June 2d. 1865 Has received no U.S. Bounty: Due U.S. for Camp & Gar. Equipage: Cost $19.75/100

FROM SECOND AUDITOR'S ROLL.

NEXT ROLL ON FILE MUSTER OUT.

Book mark:

Leger

(358) *Copyist.*

13 Kty U.S.C.T.

Patrick Taylor

Pvt., Co. D, 13 Reg't U. S. Col'd Inf'y

Appears on

Descriptive List of Deserters

dated July 31, 1865.

Deserted:

When June 26, 1865.

Where New Albany, Ind.

Arrested:

When ....., 186 .

Where .....

Remarks: .....

Book mark: .....

(851) Copyist.

13 H. Art'y. | U.S.C.T.

Frederick Taylor

Pvt., Co. D, 13 Reg't U. S. Col'd H. Art'y.

Appears on **Co. Muster-out Roll,** dated Louisville Ky., Nov 18, 186 5.

Muster-out to date ....., 186 .

Last paid to Pay due from enlistment, 186 .

Clothing account:

Last settled ....., 186 ; drawn since $.....100

Due soldier $.....100; due U. S. $.....100

Am't for cloth'g in kind or money adv'd $.....100

Due U. S. for arms, equipments, &c., $.....100

Bounty paid $.....100; due $.....100

Remarks: Deserted

*~~June 9 '65 Smithland Ky~~

Reduced to Ranks from

Sergt May 16/65 Deserted

July 1st '65 New Albany

Ind.

*So on roll.

Book mark: .....

Legar

(361) Copyist.

Taylor, Frederick

D, Co. ——, 13 Reg't U S C A

2 Enclosures.

Bed Cards	Final Statements
Burial Records	Furloughs or L. of A.
Certs. of Dis. for Discharge	Med. Certificates
C. M. Charges	Med. Des. Lists
Descriptive Lists	Orders
Discharge Certificates	Pris. of War Record
Enlistment Papers 2	Resignations

Other papers relating to—

Admission to Hosp'l	Furlough or L. of A.
Casualty Sheet	Med. Examination
Confinement	Misc. Information
Contracts	Pay or Clothing
Death or Effects	Personal Reports
Desertion	Rank
Discharge from Hosp'l	Transfer to Hosp'l
Discharge from Service	Transfer to V. R. C.
Duty	Transportation

MICROFILM PUBLICATION M 1834

COMPILED MILITARY SERVICE RECORDS
OF VOLUNTEER UNION SOLDIERS WHO SERVED WITH
THE UNITED STATES COLORED TROOPS (USCT)
13TH REGIMENT OF HEAVY ARTILLERY

PERSONAL PAPERS' TARGET SHEET

PLEASE NOTE THE CHECKED INFORMATION ABOUT THE PERSONAL PAPERS IN THIS FILE:

☐ NO PERSONAL PAPERS WERE FOUND IN THIS FILE WHEN THE RECORDS WERE ARRANGED FOR MICROFILMING.

☑ 3 PERSONAL PAPER(S) FOUND IN THIS FILE WHEN THE RECORDS WERE ARRANGED FOR MICROFILMING.

NOTE 1.—This blank will be used for both enlistments and re-enlistments—enlistment of veterans, &c., in the volunteer service. They will be made out in duplicate in all cases—one to accompany the recruiting return of the superintendent (not the recruiting officer) to the Adjutant General, and one to accompany the accounts of the officer who pays bounty, &c. The Regiment and Company in which the soldier last served should be given on the back.

NOTE 2.—An enlistment holds to service. A muster-in must, in all cases, precede payment of pay, bounty, pension, &c. A muster-in roll must, in all cases, be filed in the Adjutant General's Office as evidence of muster-in. The mustering officer, commissary, or assistant commissary of musters, as the case may be, will countersign both enlistments as having mustered the soldier into the service of the United States before either of them is given to the disbursing officer.

DECLARATION OF RECRUIT.

I, Frederick Taylor, desiring to VOLUNTEER as a Soldier in the Army of the United States, for the term of ~~THREE~~ One YEARS, Do Declare, That I am Eighteen years and ____ months of age; that I have never been discharged from the United States service on account of disability or by sentence of a court martial, or by order before the expiration of a term of enlistment; and I know of no impediment to my serving honestly and faithfully as a soldier for ~~three~~ one years.

GIVEN at Chicago Ills

the 16 day of March 1865

Witness: _____

Frederick Taylor

No. 236

Enlisted Feb 16 1865

Volunteered at Chicago Ills

By Capt Shaw

Regiment of Pontoniers

1 Battalion

Discharged _____ 18__

_____ enlistment; last served in Company ( )

_____ Reg't of _____

_____

_____

1

CONSENT IN CASE OF MINOR.

I, _____, DO CERTIFY, That I am the _____ of _____; that the said _____ is _____ years of age; and I do hereby freely give my CONSENT to his volunteering as a SOLDIER in the ARMY OF THE UNITED STATES for the period of THREE YEARS.

GIVEN at _____

the _____ day of _____

Witness: _____

_____

(A. G. O. No. 74 & 76.)

VOLUNTEER ENLISTMENT.

STATE OF Illinois TOWN OF Chicago

I, Frederick Taylor, born in Chicago in the State of Illinois, aged Eighteen years, and by occupation a Student. Do HEREBY ACKNOWLEDGE to have volunteered this Sixteenth day of March, 1865, to serve as a ~~Soldier~~ Boy in the **Army of the United States of America,** for the period of ~~THREE YEARS~~, unless sooner discharged by proper authority: Do also agree to accept such bounty, pay, rations, and clothing, as are, or may be, established by law for volunteers. And I, Frederick Taylor, do solemnly swear, that I will bear true faith and allegiance to the ***United States of America,*** and that I will serve them honestly and faithfully against all their enemies or opposers whomsoever; and that I will observe and obey the orders of the President of the United States, and the orders of the officers appointed over me, according to the Rules and Articles of War.

Sworn and subscribed to, at Chicago Ill
this 16 day of March, 1865, } Fredrick Taylor
BEFORE: Wm Nunes

I CERTIFY, ON HONOR, That I have carefully examined the above-named Volunteer, agreeably to the General Regulations of the Army, and that, in my opinion, he is free from all bodily defects and mental infirmity, which would in any way disqualify him from performing the duties of a soldier.

J M Allen
1st Dist Ill
EXAMINING SURGEON.

I CERTIFY, ON HONOR, That I have minutely inspected the Volunteer F Taylor previously to his enlistment, and that he was entirely sober when enlisted; that, to the best of my judgment and belief, he is of lawful age; and that, in accepting him as duly qualified to perform the duties of an able-bodied soldier, I have strictly observed the Regulations which govern the recruiting service. This soldier has Dark eyes, Dark hair Mulatto complexion, is 5 feet 9 1/2 inches high.

Wm Nunes
Capt Battery 1st Dist Ill ~~Volunteers~~,
RECRUITING OFFICER.

(A. G. O. No. 74 & 75.)

Mustered into the service of the United States, for ~~three~~ years or during the war, from date of enlistment, in Co. L, 1st Regiment Heavy Artillery Volunteers, on the 16 day of March, 1865, at Chicago Ill.

Wm Nunes
Capt Battery 1st Dist Ill
Recruiting Officer

Muster in Company Roll

DECLARATION OF RECRUIT.

I, Frederick Taylor, Jr., desiring to VOLUNTEER as a Soldier in the Army of the United States, for the term of ~~THREE~~ YEARS, Do Declare, That I am Eighteen years and ____ months of age; that I have never been discharged from the United States service on account of disability or by sentence of a court martial, or by order before the expiration of a term of enlistment; and I know of no impediment to my serving honestly and faithfully as a soldier for ~~three~~ years.

GIVEN at Chicago Ill.

the 16 day of March 1865

Witness: _____

Frederick Taylor Jr

No. 256

Frederick Taylor Jr

Volunteered at Chicago Ill

Dunker Ill

By Capt Dunn

Regiment of Cavalry

16, 1865

Co. [illegible]

enlistment; last served in Company ( )

Reg't of _____

Discharged _____

For 13th Regt Ill Cav

Capt Henry Corbin

Edwardsville Ill

Pay $13.33 & Rations

Feb 28 1865

_____, 18

NOTE 1.—This blank will be used for both enlistments and re-enlistments—enlistment of veterans, &c., in the volunteer service. They will be made out in duplicate in all cases—one to accompany the return of the superintendent (not the recruiting officer) to the Adjutant General, and one to accompany the account of the officer who pays bounty, &c. The Regiment and Company in which the soldier last served should be given on the back.

NOTE 2.—An enlistment holds to service. A muster-in must, in all cases, precede payment of pay, bounty, pension, &c. A muster-in roll must, in all cases, be filed in the Adjutant General's Office as evidence of muster-in. The mustering officer, commissary, or assistant commissary of musters, as the case may be, will countersign both enlistments as having mustered the soldier into the service of the United States before either of them is given to the disbursing officer.

CONSENT IN CASE OF MINOR.

I, _____, DO CERTIFY, That I am the _____ of _____; that the said _____ is _____ years of age; and I do hereby freely give my CONSENT to his volunteering as a SOLDIER in the ARMY OF THE UNITED STATES for the period of THREE YEARS.

GIVEN at _____

the _____ day of _____

Witness: _____

_____

(A. G. O. No. 74 & 76.)

VOLUNTEER ENLISTMENT.

STATE OF Illinois TOWN OF Chicago

I, Frederick Taylor, born in _____ in the State of Illinois, aged Eighteen years, and by occupation a Student, Do HEREBY ACKNOWLEDGE to have volunteered this Sixteenth day of March, 1865, to serve as a **Soldier** in the **Army of the United States of America,** for the period of ~~THREE YEARS~~ One, unless sooner discharged by proper authority: Do also agree to accept such bounty, pay, rations, and clothing, as are, or may be, established by law for volunteers. And I, Fred Taylor, do solemnly swear, that I will bear true faith and allegiance to the ***United States of America,*** and that I will serve them honestly and faithfully against all their enemies or opposers whomsoever; and that I will observe and obey the orders of the President of the United States, and the orders of the officers appointed over me, according to the Rules and Articles of War.

Sworn and subscribed to, at Chicago Ill. this 16th day of March, 1865, before Wm Innes Capt & Asst Must'g Off Rec'g

Frederick Taylor

I CERTIFY, ON HONOR, That I have carefully examined the above-named Volunteer, agreeably to the General Regulations of the Army, and that, in my opinion, he is free from all bodily defects and mental infirmity, which would in any way disqualify him from performing the duties of a soldier.

D. W. Day
1st Dist Ill
EXAMINING SURGEON.

I CERTIFY, ON HONOR, That I have minutely inspected the Volunteer F. Taylor previously to his enlistment, and that he was entirely sober when enlisted; that, to the best of my judgment and belief, he is of lawful age; and that, in accepting him as duly qualified to perform the duties of an able-bodied soldier, I have strictly observed the Regulations which govern the recruiting service. This soldier has Dark *eyes* Dark *hair,* Dark *complexion,* is 5 *feet* 9½ *inches* high.

Wm Innes
Capt & Asst Must'g Off Rec'g 1st Dist Ill ~~Regiment~~ Volunteers.
RECRUITING OFFICER.

(A. G. O. No. 74 & 76.)

Mustered into the service of the United States, for ~~three~~ one years or during the war, from date of enlistment, in Company 1st Regt Chicago Dist Ill Volunteers, on the 16 day of March, 1865, at Chicago Ill

Wm Innes
Capt & Asst Must'g Off Rec'g

O. K.

I,

being duly sworn, make oath and say, that I am a subject of

and that the statement

of facts hereunder written, and subscribed to by me, is a true state=

ment respecting myself.

STATEMENT OF FACTS.

Name, in full, Frederick Taylor

Place of Nativity, Illinois

Occupation, Student

Length of residence in United States,

If voted,

If declared intention to become a citizen of the United States,

Age, Eighteen

If ever in Military or Naval Service of United States,

Frederick Taylor

Subscribed and sworn to at my office, this Sixteenth day of March A.D. 1864, before me.

Capt. and Prov. Mar. 1st. Dist. Ills.

1912

Taylor. George

Co L, 13 U.S. Col'd H. Art'y.

Enrolled	Enrolled

CARD NUMBERS.

1	55 1869 7	26	
2	55 17969	27	
3	55 24433	28	
4	55 24593	29	
5	55 24740	30	
6	91 29814	31	
7		32	
8		33	
9		34	
10		35	
11		36	
12		37	
13		38	
14		39	
15		40	
16		41	
17		42	
18		43	
19		44	
20		45	
21		46	
22		47	
23		48	
24		49	
25		50	

Book Mark:

See also Lea D. 121. 1866 Inf

A 1690145 P.O. 7111+24

J. P. Laurent & Co

13 H. Art'y. | U.S.C.T.

George Taylor

....., Co. G, 13 Reg't U. S. Col'd H. Art'y.

Appears on

Company Descriptive Book

of the organization named above.

DESCRIPTION.

Age 20 years; height 5 feet 8½ inches.

Complexion Dark

Eyes Blk; hair Blk

Where born Fauquier Co. Va

Occupation Laborer.

ENLISTMENT.

When June 28, 1864.

Where Fredericksburg Va

By whom Lt. Clarke; term 3 y'rs.

Remarks:

E. H. Hopwood

(383g) **Copyist.**

V	13 H. Art'y.	U.S.C.T.

George Taylor

Pte, Co. I, 13 Reg't U. S. Col'd H. Art'y.

Appears on

M. and D. Roll of Men Transferred

to the organization named above,

from Co D 121 U S C Inf

Roll dated Camp Nelson Ky June 23, 1865.

When enlisted 28 Jan, 186 5.

Period for which enlisted 3 years.

When mustered in 9 Feb, 1865.

Present or absent Not stated

Company to which assigned

Remarks: Credit to Breckenridge Co Ky

Book mark :

A. Merchant

(342) *Copyist.*

9 | 13 H. Art'y. | U.S.C.T.

George Taylor
Pvt., Co. ....., 13 Reg't U. S. Col'd H. Art'y.

Appears on

M. and D. Roll of Men Transferred

to the organization named above,

from Co....., 121 Reg't U. S. Colored Infantry.

Roll dated June 23, 1865.

When enlisted Jan'y 28, 1865.

Period for which enlisted 3 years.

When mustered in Feb'y 9, 1865.

Present or absent Not stated

Company to which assigned I

Remarks: Credited to Buck-
ew Co. 6 D. Ky.

Book mark :

C. Williams,
Copyist.

G | 13 H. Art'y. | U.S.C.T.

George Taylor

Pvt., Co. D, 13 Reg't U. S. Col'd H. Art'y.

Age ..... years.

Appears on

Company Muster Roll*

for June 30, 1865.

Joined for duty and enrolled:

When Jan. 28, 1865.

Where Maysville Ky

Period 3 years

Mustered in:

When Feb. 9, 1865.

Where Bremensburg Ky

Present or absent Present

Stoppage, $ 100 for .....

Due Gov't, $ 100 for .....

Valuation of horse, $ 100

Valuation of horse equipments, $ 100

Remarks: .....

* First current roll. No muster-in roll of this company on file.

Book mark: .....

(3586) Copyist.

D | 13 H. Art'y. | U.S.C.T.

George Taylor

P.V., Co. I, 13 Reg't U. S. Col'd H. Art'y.

Appears on

Company Muster Roll

for July & Aug., 186 4.

Present or absent Present

Stoppage, $ 100 for

Due Gov't, $ 100 for

Valuation of horse, $ 100

Valuation of horse equipments, $ 100

Remarks:

NEXT ROLL ON FILE MUSTER OUT.

Book mark:

E. Fisher

(358) Copyist.

D | 13 H. Art'y. | U.S.C.T.

George Davis

Pvt., Co. D, 13 Reg't U. S. Col'd H. Art'y.

Appears on **Co. Muster-out Roll,** dated Louisville Ky, Nov. 18, 1865.

Muster-out to date June 18, 1865.

Last paid to June 30, 1865.

Clothing account:

Last settled ....., 186 ; drawn since $ 100

Due soldier $ ..... 100; due U. S. $ Dif 55 100

Am't for cloth'g in kind or money adv'd $ 100

Due U. S. for arms, equipments, &c., $ 100

Bounty paid $ 100 00 100; due $ 100

Remarks: .....

.....

.....

.....

.....

.....

Book mark: .....

B. F. Hall

Copyist.

2018

Taylor. Harvey

Co ....., 13 U.S.Col'd H. Art'y

Private

CARD NUMBERS.

1	26
2	27
3 See Tyler Nancy	
4	29
5	30
6	31
7	32
8	33
9	34
10	35
11	36
12	37
13	38
14	39
15	40
16	41
17	42
18	43
19	44
20	45
21	46
22	47
23	48
24	49
25	50

Book Mark .....

See also .....

2014

Taylor. Henry

Co. H, 13 U.S. Col'd H. Art'y.

Private | Augmt

CARD NUMBERS.

1	55 18532	26	
2	55 17955	27	
3	55 23952	28	
4	55 23995	29	
5	55 23143	30	
6	91292223	31	
7		32	
8		33	
9		34	
10		35	
11		36	
12		37	
13		38	
14		39	
15		40	
16		41	
17		42	
18		43	
19		44	
20		45	
21		46	
22		47	
23		48	
24		49	
25		50	

Book Mark:

See also Co B. 121. U.S.C.I. Inf

9 | 13 H. Art'y. | U.S.C.T.

Henry Taylor

....., Co. A, 13 Reg't U.S. Col'd H. Art'y.

Appears on

Company Descriptive Book

of the organization named above.

DESCRIPTION.

Age 20 years; height 5 feet 3½ inches.

Complexion Yellow

Eyes Blk; hair Blk

Where born Fleming Co Ky

Occupation Laborer

ENLISTMENT.

When Nov 28, 1864.

Where Maysville Ky

By whom Capt Smith; term 3 y'rs.

Remarks:

J Beck

(383*a*) Copyist.

F 13th A. | U.S.C.T.

Henry Taylor

Pvt, Co. K, Reg't U. S. Col'd

Age ____ years.

Appears on

Company Muster Roll*

for May & June, 1865.

Joined for duty and enrolled:

When Nov 2 of, 1864.

Where Maysville Ky

Period 3 years.

Mustered in:

When Nov 30, 1864.

Where Cumberland Gap Tenn

Present or absent Present

Stoppage, $ 100 for ____

Due Gov't, $ 3 & 5 100 for C.G. Equip Cost

Valuation of horse, $ 100

Valuation of horse equipments, $ 100

Remarks: ____

*First current roll. No muster-in roll of this company on file.

Book mark: ____

(3586) *Copyist.*

7 | 13 H. Art'y. | U.S.C.T.

Henry Taylor

Pvt., Co. H, 13 Reg't U. S. Col'd H. Art'y.

Appears on

M. and D. Roll of Men Transferred

to the organization named above,

from Co. B, 121 Reg't U. S. Colored Infantry.

Roll dated Camp Nelson, Ky. June 28, 1865.

When enlisted Feb 28, 1864.

Period for which enlisted 3 years.

When mustered in Feb 29, 1864

Present or absent Present

Company to which assigned

Remarks:

Book mark:

A Poindexter

(342) *Copyist.*

G | 13 H. Art'y. | U.S.C.T.

Henry Taylor

Pvt., Co. ....., 13 Reg't U. S. Col'd H. Art'y.

Appears on

M. and D. Roll of Men Transferred

to the organization named above,

from Co....., 121 Reg't U. S. Colored Infantry.

Roll dated June 26, 1866

When enlisted Nov. 28, 1864

Period for which enlisted 3 years.

When mustered in Nov. 30, 1864

Present or absent Not stated

Company to which assigned H

Remarks: Credited to Flem-

ming Co. Ky.

Book mark :

C. Williams,

(342) Copyist.

13 H. Art'y. U.S.C.T.

Henry Taylor

Sgt, Co. H, 13 Reg't U. S. Col'd H. Art'y.

Appears on

Company Muster Roll

for July ~ Aug, 1865.

Present or absent Present

Stoppage, $ 100 for

Due Gov't, $ 100 for

Valuation of horse, $ 100

Valuation of horse equipments, $ 100

Remarks: Apptd Sergt Aug 29th 1865. Due US for Camp & Eq'ip Cost $3 83

NEXT ROLL ON FILE MUSTER OUT.

Book mark:

(358) *Copyist.*

13 H. Art'y. | **U.S.C.T.**

William Taylor

Sgt, Co. G, 13 Reg't U. S. Col'd H. Art'y.

Appears on **Co. Muster-out Roll,** dated Louisville Ky, Nov 1st, 1865.

Muster-out to date Nov 1st, 1865.

Last paid to Aug 31, 1865.

Clothing account:

Last settled ....., 186 ; drawn since $ 100

Due soldier $ ..... 100; due U. S. $ 44 57/100

Am't for cloth'g in kind or money adv'd $ 100

Due U. S. for arms, equipments, &c., $ 100

Bounty paid $ 100 100; due $ 100

Remarks: Apptd Sergt Aug 1 1865 — Due US for one Rubber Coat 1 Cap 28, 1 Ball Screw 25, 1 Spread, 1 Spring Visor 30, 1 Screw 6, 1 Wrench 15 = .78 —

Book mark : .....

(361) *Copyist.*

2015

Taylor James

Co C, 13 U.S. Col'd H. Art'y.

Private	Private

CARD NUMBERS.

1	5 5 1 5 6 9 6	26	
2	5 5 1 6 9 2 4	27	
3	5 5 2 1 5 5 8	28	
4	5 5 2 1 7 3 1	29	
5	5 5 2 2 0 5 5	30	
6	9 1 2 8 4 1 8	31	
7	4 3 1 5 0 4 2 8	32	
8		33	
9		34	
10		35	
11		36	
12		37	
13		38	
14		39	
15		40	
16		41	
17		42	
18		43	
19		44	
20		45	
21		46	
22		47	
23		48	
24		49	
25		50	

Book Mark:

See also

13 H. Art'y. | U.S.C.T.

[illegible] Taylor

[illegible], Co. [illegible], 13 Reg't U. S. Col'd H. Art'y.

Appears on

Company Descriptive Book

of the organization named above.

DESCRIPTION.

Age 19 years; height 5 feet 4½ inches.

Complexion black

Eyes black; hair black

Where born Hampton Kentucky

Occupation Laborer

ENLISTMENT.

When Dec 30, 1864.

Where Clarksville Va

By whom Capt Hinkle; term 1 y'rs.

Remarks: Last Known as Co I 13 Regt Col'd Troops at Smithland

Deserted

(383*g*) Copyist.

13 K. A.

T | U.S.A.T.

Jim Taylor

Appears with rank of _____ on

Muster and Descriptive Roll

of Wagonmaker U.S. Colored Volunteer Recruits for Quarters

_____. Roll dated

Lebanon Ky, Dec. 31, 1864.

Where born Cumberland Ky

Age 19 years; occupation Laborer

When enlisted Dec. 30, 1864.

Where enlisted Lebanon Ky

For what period enlisted 1 years.

Eyes Blk; hair Blk

Complexion Blk; height 5 ft. 4½ in.

When mustered in Dec 30, 1864.

Where mustered in Lebanon

Bounty paid $ 100; due $ 100

Clothing account:

Last settled _____, 186 ; drawn since $ 15 81/100

Date of first muster Dec 30, 1864.

Company to which assigned _____

Remarks: 4" long Dist. Cumberland Ky.

without consent

Vincent Taylor Master

_____

Book mark: _____

R. Miller

(356m) Copyist.

T | 13 H. Art'y. | U.S.C.T.

Jim Taylor

Appears with rank of Pvt on

Muster and Descriptive Roll of a Detachment of U. S. Vols. forwarded

for the 13 Reg't U. S. Col'd H. Art'y. Roll dated

Draft Rendz Louisville Ky, Jan 24, 1865

Where born Cumberland, Ky

Age 19 y'rs; occupation Laborer

When enlisted Dec. 30, 1864.

Where enlisted Lebanon

For what period enlisted 1 years.

Eyes Blk; hair Blk

Complexion Blk; height 5 ft 4 1/2 in.

When mustered in Dec 30, 1864.

Where mustered in Lebanon

Bounty paid $ 100; due $ 100

Where credited 4 Dist Ky

Company to which assigned

Remarks:

Book mark:

Hammer

(339) *Copyist.*

I | 13 H. Art'y. | U.S.C.T.

Pvt John Taylor

....., Co. 6, 13 Reg't U. S. Col'd H. Art'y.

Age ..... years.

Appears on

Company Muster Roll*

for ..... to Apr 30 ....., 1865.

Joined for duty and enrolled:

When ..... Dec 30 ....., 1864.

Where ..... Lebanon Ky

Period 1 years

Mustered in:

When ..... Dec 30 ....., 1864.

Where ..... Lebanon Ky

Present or absent.....

Stoppage, $.....100 for .....

Due Gov't, $.....100 for.....

Valuation of horse, $.....100

Valuation of horse equipments, $.....100

Remarks Died Mch 29/65 at Smith-

land, Ky. Final Sta. Ford.

* First current roll. No muster-in roll of this company on file.

Book mark: .....

Paul Hutchin

(3586) Copyist.

I X Md. Arty | **U.S.C.T.**

James Taylor

I, Co. C, 13 Reg't U. S. Col'd N. Arty

Appears on

Company Muster Roll

for May & June, 1865.

Present or absent

Stoppage, $ 100 for

Due Gov't, $ 100 for

Valuation of horse, $ 100

Valuation of horse equipments, $ 100

Remarks: died.

FROM SECOND AUDITOR'S ROLL.

Book mark:

Van Horton

Copyist.

I | 13 H. Art'y. | U.S.C.T.

Jim Taylor

Appears with rank of Pvt on

Muster and Descriptive Roll of a Detachment of U. S. Vols. ~~forwarded~~ Enlisted

for the 13 Reg't U. S. Col'd H. Art'y. Roll dated

Camp Nelson, Ky. Jan 23, 1865.

Where born Cumberland, Kentucky

Age 19 y'rs; occupation Laborer

When enlisted Dec 30, 1864.

Where enlisted Lebanon, Ky.

For what period enlisted 1 years.

Eyes Black; hair Black

Complexion Black; height 5 ft. 4 in.

When mustered in Dec 30, 1864

Where mustered in Lebanon

Bounty paid $ None 100; due $ 100

Where credited 4th Reg. Dist. Ky

Company to which assigned C

Remarks: Died March 29th 1865.

Final statements forwarded

Book mark:

J Taylor

(339) Copyist.

J | 13 H. Art'y. | U.S.C.T.

James Taylor

Pvt., Co. F, 13 Reg't U. S. Col'd H. Art'y.

Appears on **Co. Muster-out Roll,** dated

Louisville Ky Nov 18, 1865.

Muster-out to date ....., 186 .

Last paid to ....., 186 .

Pay due from enlistment.

Clothing account:

Last settled....., 186 ; drawn since $.....100

Due soldier $.....100; due U. S. $.....100

Am't for cloth'g in kind or money adv'd $.....100

Due U. S. for arms, equipments, &c., $.....100

Bounty paid $.....100; due $.....100

Remarks: Died Regt. Hosp.

Smithland Ky Mch 29/65.

Pneumonia.

Book mark: .....

.....

(361)

Copyist.

Taylor James

F, Co. E, 13 U.S.C.H.A. Regt

4 Enclosures.

Bed Cards	Descriptive Lists
Burial Records	Final Statements /
Certs. of Dis. for Discharge	Furloughs
C. M. Charges	Med. Des. Lists
Med. Certificates	Orders

Enlistment

Other papers relating to—

Admission to Hosp'l	Furlough
Casualty Sheet (Officer's)	Med. Examination
Confinement	Misc. Information /
Contracts	Pay or Clothing
Death or Effects /	Personal Reports
Desertions	Rank
Discharge from Hosp'l	Transfer to Hosp'l
Discharge from Service	Transfer to V. R. C.
Duty	Transportation

DECLARATION OF RECRUIT.

I, James Taylor, desiring to volunteer as a soldier in the ARMY OF THE UNITED STATES, for the term of *Three Years*, DO DECLARE That I am 18 years and ..... months of age; that I have never been discharged from the United States service on account of disability or by sentence of a court-martial, or by order before the expiration of a term of enlistment; and I know of no impediment to my serving honestly and faithfully as a soldier for three years.

GIVEN at Louisville Ky

the 22nd day of February 1863

Witness:

R L Kent

James his Taylor
mark

By [illegible]

Volunteered at [illegible]

No. 2

18

83.

Consent of Parent or Guardian in case of a Minor, if a Free Man, or in the case of a Slave, of the Person to whom he owes Service:

I, ... DO CERTIFY, That I am

the .....

.....

that the said..... is..... ..... years of age; and I do freely give my CONSENT to his volunteering as a SOLDIER in the Army of the United States, for the period of THREE YEARS, under the conditions of the laws of the United States.

GIVEN at .....

the ..... day of .....

Witness:

.....

.....

(A. G. O. No. 74 & 76.)

NOTE 1.—This blank will be used in duplicate in all cases—one to accompany the recruiting return of the superintendent (not the recruiting officer) to the Adjutant General, and one to accompany the accounts of the officer who pays bounty, &c.

NOTE 2.—An enlistment holds to service. A muster-in must, in all cases, precede payment of pay, bounty, pension, &c. A muster-in roll, must in the Adjutant General's Office as evidence of muster-in. The mustering officer, commissary, or assistant commissary of musters, as the case may be, will countersign both enlistments as having mustered them of them is given to the disbursing officer.

UNITED STATES COLORED TROOPS ENLISTMENT.

STATE OF Kentucky TOWN OF Jefferson Co

I, James Taylor born in Jefferson Co.

in the State of Kentucky aged Eighteen years

and by occupation a Farmer Do HEREBY ACKNOWLEDGE to

have volunteered 22nd day of February 1864

to serve as a **Soldier** in the **Army of the United States of America,** for the period of THREE YEARS, unless sooner discharged by proper authority: Do also agree to accept such bounty, pay, rations, and clothing, as are, or may be, established by law for the U. S. colored troops.

And I, James Taylor

do solemnly swear that I will bear true faith and allegiance to the **United States of America,** and that I will serve them honestly and faithfully against all their enemies or opposers whomsoever; and that I will observe and obey the orders of the President of the United States, and the orders of the officers appointed over me, according to the Rules and Articles of War.

Sworn and subscribed to, at Louisville Ky

this 22nd day of February 1864 } James his + Taylor mark

Before Capt J. H. Smith A.C.S. }

I CERTIFY, ON HONOR, That I have carefully examined the above named Volunteer agreeably to the General Regulations of the Army, and that, in my opinion, he is free from all bodily defects and mental infirmity, which would in any way disqualify him from performing the duties of a soldier.

Wm R Wardlow

Asst Surg

EXAMINING SURGEON.

I CERTIFY, ON HONOR, That I have minutely inspected the Volunteer, James Taylor previously to his enlistment, and that he was entirely sober when enlisted; that, to the best of my judgment and belief, he is of lawful age; and that, in accepting him as duly qualified to perform the duties of an able-bodied soldier, I have strictly observed the regulations which govern the recruiting service. This soldier has black eyes black hair, dark complexion, is 5 feet 8 inches high.

J. H. Smith Capt

RECRUITING OFFICER OR AGENT.

Mustered into the United States Service 22 day of Feby 1864

Kenner Seaton

Capt

Mustering Officer.

Mustered into the service of the United States, for three years or during the war, from date of enlistment, in Company ..... Regiment of Kentucky Volunteers, on the ..... day of February, 1864 at Louisville Ky

J

FINAL STATEMENT

OF

Private Jim Taylor Co "C"

13th Reg't of Mass Artillery

VOLUNTEERS.

NOTE 1.—*Two* of these certificates (or duplicates) are to be given to each Volunteer Soldier or drafted man who may be discharged previously to the discharge of his company, that he may at once receive from the Paymaster the pay, &c., due him, and the captain or other COMMISSIONED officer commanding the company will certify to the act of the delivery of the duplicate certificates; on these certificates the Soldier is "entitled to" his *discharge*, and should also present his discharge to the Paymaster to have the payment endorsed on it. The discharge is to be given back to the Soldier by the Paymaster; the latter only retaining as his voucher the duplicate certificates.

NOTE 2.—If the Soldier is entitled to pay for the use of his horse, the Company Commander will certify to that fact on the back of both these final statements, and also to the time he has pay due for having been so mounted on his own horse.

NOTE 3.—When a Soldier is furnished with final statements, his descriptive list, if he has one, should be taken up by the officer who gives the Soldier these statements, and endorsed with a statement to this effect by the officer. This endorsement should exhibit a full statement of the time for which the Soldier was allowed pay on his final statements, the clothing account, and all other charges against him or in his favor, so as to comprise a complete exhibit of his account. It will then be transmitted to the company commander of the Soldier, who will enter all the data necessary to a full understanding of the Soldier's account on the muster roll upon which the Soldier's discharge is reported. The descriptive list will then be destroyed. The object of this is, that the remaining portion of the Soldier's account may be settled upon the receipt of these muster rolls, and the Soldier receive any pay or allowances that may be due him at the time of his discharge, and which may not appear on his final statements from the fact that his descriptive list is incomplete. These accounts for back pay, &c., are settled by the 2d Auditor of the Treasury Department.

NOTE 4.—Charges for loss or injury to ordnance, horse equipments, and other miscellaneous charges, should appear under the heading of "Other Stoppages."

NOTE 5.—Bounty paid by State authorities, and not by the United States, will not be entered on this statement.

NOTE 6.—Amounts due the Sutler and Laundress must be entered on the muster roll on which the discharge, death, desertion, &c., is reported, as well as on the final statement, otherwise the amount cannot be collected from the United States.

NOTE 7.—This blank will be used for deceased volunteers and drafted men, as well as for others.

NOTE 8.—Where a Soldier dies in Hospital or on detached service, his descriptive list, if he has one, should be sent with his final statements, in duplicate, to the Second Auditor, Washington, D. C.

ADJUTANT GENERAL'S OFFICE

April 5th 1865.

Duplicate with Inventory sent 2d Auditor.

I certify, on honor, that Jim Taylor a Private of Captain Wm Bolmer's Company ("C") of the 13th Regiment of U.S. Colored Artly Vol's VOLUNTEERS, of the State of ——, born in Cumberland Co, State of Kentucky, aged 19 years; 5 feet 4½ inches high; Black complexion, Black eyes, Black hair, and by occupation a Laborer, having joined the company on its original organization at ——, and enrolled in it at the muster into the service of the United States at ——, on the —— day of ——, 186 , (or was mustered in service as a recruit, by Capt. Fiddler, at Lebanon Ky, on the Thirtieth day of December, 1864, ~~or was drafted~~ and mustered into the service of the United States ~~from the Enrollment District of the State~~ of ——, ~~at~~ ——, on the Thirtieth day of December, 1864,) to serve in the Regiment, for the term of One year: and having served HONESTLY and FAITHFULLY with his Company in —— to the present date, is now entitled to a DISCHARGE by reason of Death, Died in Regimental Hospital at Smithland Ky, March 29th 1865 of Inflammation

The said Jim Taylor was ~~last paid by Paymaster~~ never paid ~~to include the~~ Enlistment ~~day of~~ ——, ~~186 , and~~ has pay due him from ~~that time~~ to the present date; he is entitled to pay and subsistence for TRAVELING to place of enrollment, and whatever other allowances are authorized to volunteer soldiers, drafted men, or militia, so discharged. He has received from the United States CLOTHING amounting to Sixty four 60/100 dollars, since the 30th day of December, 1864, when ~~his clothing account was last settled~~ Enlisting. He has received from the United States —— 100 dollars advanced BOUNTY.

There is to be stopped from him, on account of the State of ——, or other authorities, for CLOTHING, &c., received on entering service, —— 100 dollars; and for other stoppages, viz: ——

—— 100 dollars.

He has been furnished with TRANSPORTATION in kind from the place of his discharge to ——; and he has been SUBSISTED for TRAVELING to his place of enrollment, up to the ——, 186 .

He is indebted to A. C. Jones & Co, SUTLER, Two $2.00 100 dollars.

He is indebted to ——, LAUNDRESS, —— 100 dollars.

Given in Duplicate, at Smithland Ky, this 30th day of March, 1865.

Wm Bolmer
Capt 13th U.S.C.H.A
Commanding Company.

[A. G. O. No. 95—First.]

ARTICLES OF WAR.

ART. 95. When any non-commissioned officer or soldier shall die, or be killed in the service of the United States, the then commanding officer of the troop or company shall, in the presence of two other commissioned officers, take an account of what effects he died possessed of, above his arms and accoutrements, and transmit the same to the office of the Department of War, which said effects are to be accounted for, and paid to the representatives of such deceased non-commissioned officer or soldier. And in case any of the officers, so authorized to take care of the effects of deceased officers and soldiers, should, before they have accounted to their representatives for the same, have occasion to leave the regiment or post, by preferment or otherwise, they shall, before they be permitted to quit the same, deposit in the hands of the commanding officer, or of the assistant military agent, all the effects of such deceased non-commissioned officers and soldiers, in order that the same may be secured for, and paid to, their respective representatives.

ARMY REGULATIONS—EDITION OF 1863.

DECEASED SOLDIERS.

Par. 152. Inventories of the effects of deceased non-commissioned officers and soldiers, required by the 95th Article of War, will be forwarded to the Adjutant General, by the commander of the company to which the deceased belonged, and a duplicate of the same to the colonel of the regiment. Final statements of pay, clothing, &c., in duplicate, will be sent to the Adjutant General with one copy of the inventory. When a soldier dies at a post or station absent from his company, it will be the duty of his immediate commander to furnish the required inventory and final statements, and, at the same time, to forward to the commanding officer of the company to which the soldier belonged, a report of his death, specifying the date, place, and cause; to what time he was last paid, and the money or other effects in his possession at the time of his decease; which report will be noted on the next muster roll of the company to which the man belonged. Each inventory will be endorsed. "Inventory of the effects of ——— ———, late of company (—,) ——— regiment of ———, who died at ———, the —— day of ———, 186–." If a legal representative receive the effects, it will be stated in the report. If the soldier leave no effects, the fact will be reported.

Par. 153. Should the effects of a deceased non-commissioned officer or soldier not be administered upon within a short period after his decease, they shall be disposed of by a Council of Administration, under the authority of the commanding officer of the post, and the proceeds deposited with the Paymaster, to the credit of the United States, until they shall be claimed by the legal representatives of the deceased.

Par. 154. In all such cases of sales by the Council of Administration, a statement in detail, or account of the proceeds, duly certified by the Council and commanding officer, accompanied by the Paymaster's receipt for the proceeds, will be forwarded by the commanding officer to the Adjutant General. The statement will be endorsed, "Report of the proceeds of the effects of ——— ———, late of company (—,) ——— regiment of ———, who died at ———, the —— day of ———, 186–."

NOTE 1.—The effects in all cases, when called for, should be turned over to the legal representative, without further authority from the Adjutant General. When the effects are turned over to the relatives of the deceased before these inventories are sent to the Adjutant General, their receipts therefor should be attached to the inventories. In all other cases, one copy will be sent with a letter of transmittal direct to the Adjutant General, and a duplicate retained by the officer.

NOTE 2.—Particular care should be taken to take receipts in duplicate from the Paymaster for any funds turned over to him; one copy should be sent direct to the Adjutant General and one retained by the officer.

INVENTORY OF THE EFFECTS

OF

Jno Taylor

Late of Company "C"

13th *Reg't of* Ky Cav Artillery

Volunteers, who died at Smithland Ky

on the 29th *day of* March 186 4.

APR 17 1871

Inventory of the effects of Sam Taylor late a Private of Captain Wm Bolmin's Company "C" of the 13 Regiment of U S C H artillery Volunteers, who was enrolled as a Private at Lebanon in the State of Kentucky on the 30" day of December 1864 and mustered into the service of the United States as a Private on the 30" day of December 1864, at Lebanon Ky in Company —, 13th Regiment of U S C H artillery Volunteers, to serve One years ~~or during the war~~; he was born in Cumberland County in the State of Kentucky; he was 19 years of age, 5 feet 4½ inches high, Black complexion, Blk eyes, Blk hair, and by occupation, when enrolled, a Laborer; he died in Regimental Hospital, at Smithland Ky on the 29th day of March 1865, by reason of Inflamation —

INVENTORY.

Articles.	No.	Articles.	No.	Articles.	No.
Hats		Pairs trowsers		Knapsacks	
Caps		Pairs flannel drawers			
Forage caps		Pairs cotton drawers			
Great coats		Flannel shirts			
Uniform coats		Cotton shirts			
Uniform jackets		Pairs boots			
Flannel sack coats		Pairs shoes			
Blouses		Pairs socks			
Stable frocks		Blankets			
Fatigue overalls		Haversacks			

Deceased effects

Money.		
	Specie	$
	Notes	$

I CERTIFY, ON HONOR, that the above inventory comprises all the effects of Private Sam Taylor deceased, and that the effects are in the hands of ..... at .....

..... to be disposed of by a Council of Administration.

(DUPLICATES.)

Wm Bolmin
Capt 13" U S C H a
Commanding the Company.

STATION: Smithland Ky

DATE: March 30" 1865

[A. G. O. No. 104.]

War Department,

ADJUTANT GENERAL'S OFFICE,

Washington, Feby 6 1867.

Respectfully returned to the Commission for the State of Kentucky, with the information that James Taylor was enlisted at Louisville Ky. February 22nd "1865 and was mustered in as Pvt. in Co. "E" 13th U S C H A (Hy) Feby 22nd 1865.

A T Rorbacher

A. A. G.

Asst. Adj't General.

No. 1

APPLICATION OF

Vincent Taylor

OF

Cumberland Co Ky

FOR COMPENSATION FOR SLAVE, NAMED

Dave Taylor

Enlisted 29 December, 1864,

In Co E, 13 H A Regiment,

U. S. COLORED TROOPS.

Received ____, 186_

COMPENSATION AWARDED

____, 186_

____ Dollars.

President Board of Claims.

Claimant's Attorney,

R. T. DURRETT,

Louisville, Ky.

Claimant's Post-office address,

Burkesville

Cumberland Co Ky

LOUISVILLE COURIER PRINT.

Proof of Ownership and Identity. [Form 6.]

I Charles Cuttenden a loyal citizen and resident of the City of Louisville State of Ky after being duly sworn, depose and state, that I have been for ---- years personally and well acquainted with James Taylor ——— a Private in Company E of the 13th A Regiment of U. S. C. Troops, who enlisted and was mustered into service at Lebanon on the 29 day of Dec 1864; that I knew the said James before he went into and while he was in the service aforesaid, and know that the said James Taylor is the identical person who when he went into the United States service, as aforesaid, was the slave of and owed service to Vincent Taylor of Cumberland Co Ky. I was in the same Regiment with said James and know his own statement

I have no personal interest in the prosecution of this claim, and make this voluntary affidavit to identify said slave and owner, and to enable the latter to obtain whatever compensation is just and due on account of said enlistment.

Witness

Charles Cuttenden
Mark

State of Kentucky
County of Jefferson } ss.

I, Jacob Hull a Notary Public ——— in and for said County and State, hereby certify that on this day personally appeared before me the above-named Charles Cuttenden known to me to be the person he represents himself to be; and after hearing the foregoing affidavit read and explained by me, and understanding the same, subscribed and swore to the same. And I further certify, that I have no personal interest in the presentation of this claim.

Witness my hand and seal this 24 day of Dec 1866

Jacob Hull N.P.
for Jefferson Co Kentucky

CERTIFICATE OF LOYALTY.

[FORM 7.]

STATE OF KENTUCKY,
COUNTY OF Cumberland } ss.

I, Wm J. Dixon Postmaster of the U.S. at Burkesville Ky hereby certify, that I am personally, and by reputation, acquainted with Vincent Dayton, who, under the provisions of the 24th Section of the Act of Congress, approved February 24th, 1864, and the 2d Section of the Act approved July 28th, 1866, is claiming compensation for a slave named Samuel Dayton, alleged to have been mustered into the United States military service on the 29 day of December 186 7, at Columbia, and assigned to Company C, of the 13th Regiment United States Colored Troops; that at said date of enlistment, said Vincent Dayton was a loyal citizen and resident of said County and State; that he was loyal during the war with the so-called Confederate States of America, and has been ever since; and that he is worthy of full faith and credit in any statements he has or may make touching said claim for compensation; and that his witnesses G A Hood & G A Saylor are loyal and worthy of full faith and credit.

Witness my hand and official designation, at Burkesville Kentucky, this 3d day of January, 186 7

Wm J. Dixon P.M.
at Burkesville Ky

No. .....

[Form 1.]

CLAIM OF

Vincent Taylor

FOR COMPENSATION FOR SLAVE NAMED

James Taylor

I, Vincent Taylor, a loyal citizen and resident of ....., Cumberland Co., State of Kentucky, upon oath, state that I am entitled to, and hereby claim compensation, under the provisions of the 24th section of the act of Congress, approved February 24th, 1864, and of the 2d section of the act, approved July 28th, 1866, for my slave named James Taylor, who was Enlisted into the military service of the United States on the 29 day of December 186 4, at Lebanon Ky by ..... and assigned to the 13th U.S. Regiment of United States Colored Troops, Company E; that, at the date of said enlistment, I was a loyal citizen and resident of said county and State, and then and there owner of and entitled to the services of said slave; that I did not acquire said slave subsequent to said enlistment, but had a valid title to him at the date of said enlistment, and previous thereto: I having acquired my title to him and my ownership over him as follows, to wit: The said James Taylor was born and Servant - Owned his mother and I have owned him ever since

that when said slave went into the service he was able-bodied, sound of body and mind, and worth $ 500; that the claim I hereby make for compensation for said slave is just and true, and due me as owner of and entitled to his services, and I ought to recover for him the sum of $ 300, under the provisions of said acts; that this claim for compensation, as owner, is for the identical slave who was a Slave in Company E, of the 13th U.S. Regiment United States Colored Troops, as aforesaid; and that I have received from the Government no compensation or bounty for said slave, nor made any application except this, therefor.

I do further swear that I have never joined, or been concerned in, any insurrection or rebellion; that I have never borne arms against the United States; that I have never given any aid, countenance, counsel or encouragement to any person or persons engaged, or whom I had reason to believe were about to engage, in insurrection, rebellion, or armed hostility against the United States; that I have never sought nor accepted, nor attempted to exercise the functions of any office, civil or military, nor to perform any service whatever under any authority, or pretended authority in hostility to the United States; that I have not yielded a voluntary support to any insurrection, rebellion or pretended government, authority, power or constitution, within the United States, hostile thereto. And I do further swear that, to the best of my knowledge and ability, I have supported and defended, and will continue to support and defend, the United States, against all enemies, foreign and domestic; and that I have supported, defended and obeyed, and will continue to support, defend and obey, the Constitution and Laws of the United States; that I will bear true faith and allegiance to the same; and that I take this oath freely, without any mental reservation or purpose of evasion; So help me God.

And, in consideration of said enlistment and of said compensation, I Vincent Taylor do hereby manumit, set free and forever release said James Taylor from all service due me —his freedom to commence from the 29 day of December, 186 4, the date of said enlistment into the military service of the United States.

I herewith file and make part hereof a certificate of enlistment and descriptive roll of said slave, and proof of my loyalty and ownership as required by said acts, and General Orders No. 329, 1863, War Department, Adjutant General's Office.

My Post-Office address is Burkesville County of Cumberland, State of Kentucky, and I hereby direct that all communications to me, touching this claim, be sent under cover to R. T. DURRETT, of Louisville, Kentucky, who is hereby appointed and constituted my true and lawful attorney, to prosecute this claim for me, and who is hereby authorized and empowered to receive and receipt for any award, order, draft, certificate, voucher, warrant, papers or money that may be issued in the adjustment of this claim, or the payment thereof, the same as I might or could do in person were I present and acting for myself, and to file any additional evidence or papers that may be required in the prosecution of this claim.

[Witness.] G H Hood

J. A. Taylor

Two witnesses to owner's signature sign here.

The owner signs here. Vincent Taylor

STATE OF KENTUCKY,
County of Cumberland } ss.

I, E. J. Ellison, a Notary Public in and for said County and State, duly commissioned and sworn, and authorized to administer oaths and take acknowledgments, hereby certify that on this day personally appeared before me Vincent Dayton, known to me to be the person he represents himself to be, and a loyal citizen and resident of said County and State, worthy of full faith and credit; and, after hearing the foregoing paper read, and understanding the meaning and purport of the same, subscribed and swore to the same, and acknowledged the power of attorney and deed of manumission therein to be his act and deed. I further certify that I have no interest, direct or indirect, in the prosecution of this claim.

Witness my hand and seal, this 29 day of January, 186 7

The officer swearing the owner signs here. E. J. Ellison Ln. Clerk Ct. (L. S.)

PROOF OF OWNERSHIP.

STATE OF KENTUCKY,
County of Cumberland } ss.

[FORM 2.]

We, G. H. Hood and G. A. Taylor each of lawful age, and loyal citizens of said County and State, upon our oaths declare that we are, and have been for ..... years, personally acquainted with Vincent Dayton and know that on the 29 day of December 1864 he was a loyal citizen of said County and State, and then and there as stated by him the owner of and entitled to the services of a slave, named James Dayton referred to and described as a Private in Company E of the 13 H.A. Regiment United States Colored Troops, in the foregoing claim for compensation; that the ownership of said Vincent Dayton to said slave is not based upon any transfer made subsequent to said date, when said slave is alleged to have entered into the military service of the United States, but that said claimant's title to said slave was valid at the date of and previous to said enlistment, as stated in his own preceeding affidavit.

Two witnesses to ownership sign here. G. H. Hood
G. A. Taylor

STATE OF KENTUCKY,
County of Cumberland } ss.

I, E. J. Ellison a Notary Public and for said County and State, duly commissioned and sworn, and authorized to administer oaths, do hereby certify that on this day personally appeared before me the above named G. H. Hood and G. A. Taylor known to me to be the persons they represent themselves to be, and loyal citizens of said County and State, worthy of full faith and credit, and after hearing the foregoing statements read, and understanding the same, severally subscribed and swore to the same. I further certify that I have no interest, direct or indirect, in the prosecution of this claim.

Witness my hand and seal this 29 day of January, 186 7

The officer swearing the witnesses signs here. E. J. Ellison Clerk Ct. (L. S.)

PROOF OF LOYALTY.

STATE OF KENTUCKY,
County of Cumberland } ss.

[FORM 3.]

We, G. H. Hood and G. A. Taylor each of lawful age, and loyal citizens of said County and State, upon our oaths declare that we are, and have been for ..... years, acquainted with Vincent Dayton of said County and State, who is the applicant in the foregoing claim for compensation for a slave named James Dayton, described as a Private in Company E, of the 13 H.A. Regiment of United States Colored Troops; that we have well known said Vincent Dayton since the 4th day of March, 1861, and know that he has firmly and faithfully maintained his adherence and allegiance to the Government of the United States, by defending its cause against the Government of the so-called Confederate States of America, in all suitable and practicable ways, according to his ability and opportunity; that on the 29 day of December, 186 4 when said slave is alleged to have entered the military service of the United States, the said Vincent Dayton was a loyal citizen and resident of said County and State, and that he has been loyal ever since.

Two witnesses to loyalty sign here. G. H. Hood
G. A. Taylor

STATE OF KENTUCKY,

County of Cumberland } ss.

I E. J. Ellison, a Circuit Clerk in and for said County and State, duly commissioned and sworn, and authorized to administer oaths, do hereby certify that on this day personally appeared before me the above named J. H. Moore, and G. A. Taylor, known to me to be the persons they represent themselves to be, and loyal citizens of said County and State, worthy of full faith and credit, and after hearing the foregoing statement read, and understanding the same, severally subscribed and swore to the same. I further certify that I have no interest, direct or indirect, in the prosecution of this claim. Witness my hand and seal this 2d day of January, 186 7

The officer swearing the witnesses signs here. E. J. Ellison Circuit Clerk

L. S.

STATE OF KENTUCKY,

County of Cumberland } ss.

I L. A. Waggener Clerk of the County Court, in and for said County and State, and keeper of its records and seal, do hereby certify that E. J. Ellison, whose signature and certificate appears to the foregoing oaths, statements and acknowledgments, was at the date thereof an acting Circuit Clerk within and for said County, duly commissioned and sworn; that his official acts as such are entitled to full faith and credit, and that his signature thereto is genuine. I further certify that said Vincent Taylor, the witness present and his predecessors J. H. Moore and J. A. Taylor and E. J. Ellison Circuit Clerks are loyal citizens of said County and State, and worthy of full faith and credit, and were so during the war.

In witness whereof, I have hereunto set my hand and affixed the seal of said County, at my office, in Burkesville this 3rd day of January, 1867.

The County Clerk signs here and affixes the County Seal. L. A. Waggener Clerk

Cumberland County Court.

Certificate of Award of the Board of Claims.

OFFICE OF THE BOARD OF CLAIMS,
FOR SLAVES ENLISTED OR DRAFTED IN THE SERVICE OF THE U. S.

....., 186.....

WE HEREBY CERTIFY, that....., of.....County, State of .....having proved, under oath.....loyalty to the Constitution and Government of the United States, and established.....title as to the ownership of..... a slave,.....and mustered at.....on the.....day of ....., 186....., by.....in the service of the United States, in the.....Regiment of Colored Troops, Company....., the sum of ..... dollars has been awarded to.....by this Board, subject to the approval of the Secretary of War, as a compensation for the said slave, under the provisions of Section 24, Act approved February 24, 1864, and Section 2, Act approved July 28, 1866.

....., President of the Board.

....., Member of Board.

....., Member of Board.

To.....

Chief of the Bureau for the organization of Colored Troops, Washington, D. C.

2016

Taylor. James

Co E, 13 U.S. Col'd H. Art'y.

Private	Private

CARD NUMBERS.

1	5-5-1-5-7-8-3	26	
2	5-5-3-3-1-3-6	27	
3	5-5-2-2-7-1-3	28	
4	5-5-2-2-8-5-7	29	
5	5-5-2-2-9-9-5-	30	
6	9-1-2-8-7-7-0	31	
7		32	
8		33	
9		34	
10		35	
11		36	
12		37	
13		38	
14		39	
15		40	
16		41	
17		42	
18		43	
19		44	
20		45	
21		46	
22		47	
23		48	
24		49	
25		50	

Book Mark:

See also

J | 13 H. Art'y. | U.S.C.T.

James Taylor

....., Co. E, 13 Reg't U. S. Col'd H. Art'y.

Appears on

Company Descriptive Book

of the organization named above.

DESCRIPTION.

Age 18 years; height 5 feet 8 inches.

Complexion Dark

Eyes Brk; hair Blk

Where born Jefferson Co., Ky.

Occupation Farmer

ENLISTMENT.

When Feb 22, 1863.

Where Louisville

By whom Capt Smith; term 3 y'rs.

Remarks:

Beck

(383*g*) **Copyist.**

T | 13 H. Art'y. | U.S.C.T.

James Taylor

Appears with rank of Pvt on

Muster and Descriptive Roll of a Detachment of U. S. Vols. forwarded

for the 13 Reg't U. S. Col'd H. Art'y. Roll dated

Louisville Ky, Feb. 22, 1865.

Where born Jefferson Co. Ky

Age 18 y'rs; occupation Farmer

When enlisted Feb. 22, 1865.

Where enlisted Louisville, Ky

For what period enlisted 3 years.

Eyes Blk; hair Blk

Complexion Dark; height 5 ft. 8 in.

When mustered in Feb. 22, 1865.

Where mustered in Louisville, Ky

Bounty paid $ 100; due $ 100

Where credited Jefferson Co. 5th Dist Ky

Company to which assigned E

Remarks:

Book mark:

Hammer

Copyist.

T | 13 H. Art'y. | U.S.C.T.

James Taylor

Appears with rank of Pvt on

Muster and Descriptive Roll of a Detachment of U. S. Vols. ~~forwarded~~

Organized as Co. E.

~~for the~~ 13 Reg't U. S. Col'd H. Art'y. Roll dated

Louisville Ky. Apr 12, 1865.

Where born Jefferson Ky.

Age 18 y'rs; occupation Farmer

When enlisted Feby 22, 1865.

Where enlisted Louisville Ky

For what period enlisted 3 years.

Eyes Blk; hair Blk

Complexion Drk; height 5 ft. 8 in.

When mustered in Feby 22, 1865.

Where mustered in Louisville Ky.

Bounty paid $ 100; due $ 100

Where credited

Company to which assigned

Remarks: 5th Dist. Ky.

Book mark: T 758 Ky.

Harris

(339) *Copyist.*

T | 13 H. Art'y. | U.S.C.T.

James Taylor

Pvt., Co. C, 13 Reg't U. S. Col'd H. Art'y.

Age ..... years.

Appears on

Company Muster Roll*

for May + June, 1865.

Joined for duty and enrolled:

When Feb. 22, 1865.

Where Louisville, Ky.

Period 3 years

Mustered in:

When Feb. 22, 1865.

Where Louisville Ky.

Present or absent Present.

Stoppage, $ 100 for .....

Due Gov't, $ 100 for .....

Valuation of horse, $ 100

Valuation of horse equipments, $ 100

Remarks: .....

* First current roll. No muster-in roll of this company on file.

Book mark: .....

W C Davis

(3586) *Copyist.*

F | 13 H. Art'y. | U.S.C.T.

James Taylor

Pvt, Co. E, 13 Reg't U. S. Col'd H. Art'y.

Appears on

Company Muster Roll

for July & Aug, 186 5.

Present or absent Present.

Stoppage, $ 100 for

Due Gov't, $ 100 for

Valuation of horse, $ 100

Valuation of horse equipments, $ 100

Remarks: Pvt. Descr. 3 bounty due $100.

NEXT ROLL ON FILE MUSTER OUT.

Book mark:

W C Davis

(358) *Copyist.*

F | 13 H. Art'y. | U.S.C.T.

James Taylor

Pvt, Co. E, 13 Reg't U. S. Col'd H. Art'y.

Appears on **Co. Muster-out Roll,** dated Louisville, Ky., Nov. 18, 1865.

Muster-out to date Nov. 18, 1865.

Last paid to June 30, 1865.

Clothing account:

Last settled ....., 186 ; drawn since $ 100

Due soldier $ ..... 100 ; due U. S. $ 3 47 33/100

Am't for cloth'g in kind or money adv'd $ 100

Due U. S. for arms, equipments, &c., $ 100

Bounty paid $ ..... 100 ; due $ 100 00/100

Remarks: Stoppage C. & G. C. lost. $4.90 Ordnance 13 cents.

Book mark: F. 758, Ky.

M C Davis

(361) *Copyist.*

205

Taylor. John

Co E, 13 U.S.Col'd H. Art'y.

Enlisted | Enlisted

CARD NUMBERS.

1	5 5 1 6 2 2 6	26	
2	5 5 1 6 2 4 0	27	
3	5 5 2 2 7 1 5	28	
4	5 5 2 2 8 5 9	29	
5	5 5 2 2 9 9 7	30	
6	9 1 2 8 7 7 2	31	
7		32	
8		33	
9		34	
10		35	
11		36	
12		37	
13		38	
14		39	
15		40	
16		41	
17		42	
18		43	
19		44	
20		45	
21		46	
22		47	
23		48	
24		49	
25		50	

Book Mark:

See also

L. 21742 69 Pouron

2 | 13 H. Art'y. | U.S.C.T.

John Taylor

....., Co. E....., 13 Reg't U. S. Col'd H. Art'y.

Appears on

Company Descriptive Book

of the organization named above.

DESCRIPTION.

Age 23 years; height 5 feet 10 inches.

Complexion Black

Eyes Blk; hair Blk

Where born Bullett Co, Ky

Occupation Farmer

ENLISTMENT.

When Aug 21, 1863.

Where Louisville

By whom Capt Womack; term 3 y'rs.

Remarks:

Beck

(383*a*) Copyist.

I | 13 H. Art'y. | U.S.C.T.

John Taylor

Appears with rank of Pvt on

Muster and Descriptive Roll of a Detachment of U. S. Vols. forwarded

for the 13 Reg't U. S. Col'd H. Art'y. Roll dated

Louisville Ky, Apl 21, 1865.

Where born Bullitt Co Ky

Age 23 y'rs; occupation Farmer

When enlisted Apl 21, 1865.

Where enlisted Louisville Ky

For what period enlisted 3 years.

Eyes blk; hair blk

Complexion blk; height 5 ft. 10 in.

When mustered in Apl 21, 1865.

Where mustered in Louisville Ky

Bounty paid $ 100; due $ 100

Where credited Bullitt Co 4 Dist Ky

Company to which assigned I

Remarks:

Book mark:

Rose

(339) Copyist.

J | 13 H. Art'y. | U.S.C.T.

John Taylor

Appears with rank of Pvt on

Muster and Descriptive Roll of a Detachment of U. S. Vols. forwarded

for the 13 Reg't U. S. Col'd H. Art'y. Roll dated

Draft Rendezvous, Apl 22, 1865.

Where born Louisville Ky Bullitt Ky

Age 23 y'rs; occupation Farmer

When enlisted Apl 21, 1865.

Where enlisted Louisville Ky

For what period enlisted 3 years.

Eyes Black; hair Black

Complexion Black; height 5 ft. 10 in.

When mustered in Apl 21, 1865.

Where mustered in Louisville Ky

Bounty paid $ 100; due $ 100

Where credited 4th Dist Ky

Company to which assigned

Remarks:

Book mark:

Rose

(339) *Copyist.*

T | 13 H. Art'y. | U.S.C.T.

John Taylor

Pvt., Co. E, 13 Reg't U. S. Col'd H. Art'y.

Age ..... years.

Appears on

Company Muster Roll*

for May & June, 1865.

Joined for duty and enrolled:

When Apr. 21, 1865.

Where Louisville, Ky.

Period 3 years

Mustered in:

When Apr. 21, 1865.

Where Louisville, Ky.

Present or absent Present.

Stoppage, $.....100 for .....

Due Gov't, $.....100 for .....

Valuation of horse, $.....100

Valuation of horse equipments, $.....100

Remarks: .....

* First current roll. No muster-in roll of this company on file.

Book mark: .....

McDaus.

Copyright.

T | 13 H. Art'y. | U.S.C.T.

John Taylor

Pvt., Co. E, 13 Reg't U. S. Col'd H. Art'y.

Appears on

Company Muster Roll

for July + Aug., 186 5.

Present or absent Present.

Stoppage, $ 100 for

Due Gov't, $ 100 for

Valuation of horse, $ 100

Valuation of horse equipments, $ 100

Remarks: Pt. Dust. of bounty due $100.

NEXT ROLL ON FILE MUSTER OUT.

Book mark:

P C Davis

(358) Copyist.

C | 13 H. Art'y. | U.S.C.T.

John Taylor

Pvt, Co. C; 13 Reg't U. S. Col'd H. Art'y.

Appears on **Co. Muster-out Roll,** dated Louisville, Ky., Nov. 18, 1865.

Muster-out to date Nov. 18, 1865.

Last paid to June 30, 1865.

Clothing account:

Last settled ....., 186 ; drawn since $ 100

Due soldier $ ..... 100; due U. S. $ 13 91/100

Am't for cloth'g in kind or money adv'd $ 100

Due U. S. for arms, equipments, &c., $ 100

Bounty paid $ ..... 100; due $ 100 00/100

Remarks: Stoppage C. & E. lost $4.95.

Book mark:

D A Davis

(361) *Copyist.*

Taylor John

, Co. E , 13 Reg't 20th N.H.

1 **Enclosures.**

Bed Cards	Final Statements
Burial Records	Furloughs or L. of A.
Certs. of Dis. for Discharge	Med. Certificates
C. M. Charges	Med. Des. Lists
Descriptive Lists	Orders
Discharge Certificates	Pris. of War Record
Enlistment Papers 1	Resignations

Other papers relating to—

Admission to Hosp'l	Furlough or L. of A.
Casualty Sheet	Med. Examination
Confinement	Misc. Information
Contracts	Pay or Clothing
Death or Effects	Personal Reports
Desertion	Rank
Discharge from Hosp'l	Transfer to Hosp'l
Discharge from Service	Transfer to V. R. C.
Duty	Transportation

DECLARATION OF RECRUIT.

I, John Taylor ..... desiring to volunteer as a soldier in the ARMY OF THE UNITED STATES, for the term of *Three Years*, DO DECLARE That I am 23 years and ..... months of age; that I have never been discharged from the United States service on account of disability or by sentence of a court-martial, or by order before the expiration of a term of enlistment; and I know of no impediment to my serving honestly and faithfully as a soldier for three years.

GIVEN at Louisville Ky

the 21 day of April 1865

Witness:

Geo. C. Cole

his
John x Taylor
mark

One hundred & Eighth Regt. U.S. Colored Troops.

No. 1145

Volunteered at Louisville Ky

April 21 1865

By Lt. B. Pearmache

Capt. & Prov. Mar.

3rd Dist. Ky.

John Taylor
Pvt. Co. "I"
108th Regt. U.S.C.T.

Consent of Parent or Guardian in case of a Minor, if a Free Man, or in the case of a Slave, of the Person to whom he owes Service:

I, ... DO CERTIFY, That I am

the .....

.....

that the said ..... is .... years of age; and I do freely give my CONSENT to his volunteering as a SOLDIER in the Army of the United States, for the period of THREE YEARS, under the conditions of the laws of the United States.

GIVEN at .....

the ..... day of .....

Witness:

.....

.....

(A. G. O. No. 74 & 76.)

NOTE 1.—This blank will be made out in duplicate in all cases—one to accompany the recruiting return of the superintendent (not the recruiting officer) to the Adjutant General, and one to accompany the accounts of the officer who pays bounty, &c.

NOTE 2.—An enlistment holds to service. A muster-in must, in all cases, precede payment of pay, bounty, pension, &c. A muster-in roll, must in all cases, be filed in the Adjutant General's Office as evidence of muster-in. The mustering officer, commissary, or assistant commissary of musters, as the case may be, will countersign both enlistments as having mustered the soldiers into the service of the United States before either of them is given to the disbursing officer.

UNITED STATES COLORED TROOPS ENLISTMENT.

STATE OF Kentucky ~~TOWN~~ County OF Bullett

I, John Taylor born in Bullett Co. in the State of Kentucky aged 23 years and by occupation a Farmer Do HEREBY ACKNOWLEDGE to have volunteered 21 day of April 1865 to serve as a **Soldier** in the **Army of the United States of America,** for the period of THREE YEARS, unless sooner discharged by proper authority: Do also agree to accept such bounty, pay, rations, and clothing, as are, or may be, established by law for the U. S. colored troops.

And I, John Taylor do solemnly swear that I will bear true faith and allegiance to the **United States of America,** and that I will serve them honestly and faithfully against all their enemies or opposers whomsoever; and that I will observe and obey the orders of the President of the United States, and the orders of the officers appointed over me, according to the Rules and Articles of War.

Sworn and subscribed to, at Louisville Ky this 21 day of April 1865 Before G. M. Manack Capt. & Pro Mar. 6th Dist. Ky

John X his Taylor mark

I CERTIFY, ON HONOR, That I have carefully examined the above named Volunteer agreeably to the General Regulations of the Army, and that, in my opinion, he is free from all bodily defects and mental infirmity, which would in any way disqualify him from performing the duties of a soldier.

J. Gardner

EXAMINING SURGEON.

I CERTIFY, ON HONOR, That I have minutely inspected the Volunteer, Taylor previously to his enlistment, and that he was entirely sober when enlisted; that, to the best of my judgment and belief, he is of lawful age; and that, in accepting him as duly qualified to perform the duties of an able-bodied soldier, I have strictly observed the regulations which govern the recruiting service. This soldier has Blk. eyes, Blk. hair, Blk. complexion, is 5 feet 10 inches high.

G. M. Manack

Pro. Mar 6 RECRUITING OFFICER OR AGENT.

Mustered into the United States Service 21 day of April 1865

G. M. Manack

Pro Mar 6 Mustering Officer.

Jno Pope

Mustered into the service of the United States, for three years or during the war, from date of enlistment, in Company ..... Regiment of ..... Volunteers, on the ..... day of ....., 186 , at .....

2018

Taylor, John

Co L, 13 U.S. Col'd H. Art'y.

Private	Private

CARD NUMBERS.

1	5518696	26	
2	5517968	27	
3	5524432	28	
4	5524592	29	
5	5524739	30	
6	9129813	31	
7		32	
8		33	
9		34	
10		35	
11		36	
12		37	
13		38	
14		39	
15		40	
16		41	
17		42	
18		43	
19		44	
20		45	
21		46	
22		47	
23		48	
24		49	
25		50	

Book Mark:

See also Geo D. 121. U.S.C.T. Inf.

Property of
Princeton University
Library

I | 13 H. Art'y. | U.S.C.T.

John Taylor

....., Co. C, 13 Reg't U.S. Col'd H. Art'y.

Appears on

Company Descriptive Book

of the organization named above.

DESCRIPTION.

Age 16 years; height 5 feet 1 inches.

Complexion Yellow

Eyes Blk ; hair Blk

Where born Mason Co. Ky

Occupation Laborer

ENLISTMENT.

When Feb 15, 1864.

Where Maysville Ky

By whom Lt Clark; term 3 y'rs.

Remarks:

E N Assembly

(383*g*) *Copyist.*

9th	13 H. Art'y.	U.S.C.T.

John Taylor

Pvt, Co. I, 13 Reg't U. S. Col'd H. Art'y.

Appears on

M. and D. Roll of Men Transferred

to the organization named above,

from Co D 121 US C Inf

Roll dated Camp Nelson Ky June 23, 1865.

When enlisted 13 Feby, 1865.

Period for which enlisted 3 years.

When mustered in 16 Feb, 1865.

Present or absent not stated

Company to which assigned

Remarks: Credit to Mason Co, 9 Dist Ky

Book mark :

S. Merchant

(342) *Copyist.*

9 | 13 H. Art'y. | U.S.C.T.

John Taylor

Pvt., Co. ....., 13 Reg't U. S. Col'd H. Art'y.

Appears on

M. and D. Roll of Men Transferred

to the organization named above,

from Co....., 121 Reg't U. S. Colored Infantry.

Roll dated June 26, 1865.

When ~~enlisted~~ Feb. 13, 1865.

Period for which enlisted 3 years.

When mustered in Feb. 16, 1865.

Present or absent Not stated

Company to which assigned I

Remarks: Credited to Mason Co. 9 D. Ky.

Book mark :

C. Williams,

(342) *Copyist.*

D | 13 H. Art'y. | U.S.C.T.

John Taylor

R, Co. L, 13 Reg't U. S. Col'd H. Art'y.

Age ..... years.

Appears on

Company Muster Roll*

for June 30, 1865.

Joined for duty and enrolled:

When Feb. 13, 1865.

Where Maysville Ky

Period 3 years

Mustered in:

When Feb. 16, 1865.

Where Fredericksburg Ky

Present or absent Present

Stoppage, $ 100 for .....

Due Gov't, $ 100 for .....

Valuation of horse, $ 100

Valuation of horse equipments, $ 100

Remarks: .....

* First current roll. No muster-in roll of this company on file.

Book mark: .....

(2586)

Copyist.

I | 13 H. Art'y. | U.S.C.T.

Corl Taylor

Pvt., Co. I, 13 Reg't U. S. Col'd H. Art'y.

Appears on

Company Muster Roll

for July & Aug., 186 5.

Present or absent Present.

Stoppage, $.....100 for .....

.....

Due Gov't, $.....100 for .....

.....

.....

Valuation of horse, $.....100

Valuation of horse equipments, $.....100

Remarks:.....

.....

.....NEXT ROLL ON FILE MUSTER OUT.....

.....

.....

.....

.....

.....

Book mark:.....

B. Fisher

(358) Copyist.

I | 13 H. Art'y. | U.S.C.T.

John Taylor

E, Co. A, 13 Reg't U. S. Col'd H. Art'y.

Appears on **Co. Muster-out Roll,** dated Louisville Ky., June 18, 1865.

Muster-out to date May 18, 1865.

Last paid to June 30, 1865.

Clothing account:

Last settled ....., 186 ; drawn since $ 100

Due soldier $ ..... 100; due U. S. $ 16 60/100

Am't for cloth'g in kind or money adv'd $ 100

Due U. S. for arms, equipments, &c., $ 100

Bounty paid $ 100 0/100; due $ 100

Remarks: .....

.....

.....

.....

.....

.....

Book mark: .....

B. Fisher

Copyist.

2019

Taylor. Joseph

Co G, 13 U.S.Col'd H. Art'y.

Private | Corporal.

CARD NUMBERS.

1	5 5 1 8 3 6 8	26	
2	5 5 1 7 9 4 5	27	
3	5 5 2 3 5 0 4	28	
4	5 5 2 3 6 5 1	29	
5	5 5 2 3 6 9 7	30	
6	9 1 2 9 1 7 9	31	
7		32	
8		33	
9		34	
10		35	
11		36	
12		37	
13		38	
14		39	
15		40	
16		41	
17		42	
18		43	
19		44	
20		45	
21		46	
22		47	
23		48	
24		49	
25		50	

Book Mark:

See also Co A. 121. U.S.C.I. Inf

S-2067007 P.O. mm
P3054727 mod
P3061673 amend
P3083915 P.O. RLF
D.D. - 6-10-15 — EF

D Emmert Co

G | 13 H. Art'y. | U.S.C.T.

Joseph Taylor

, Co. G, 13 Reg't U.S. Col'd H. Art'y.

Appears on

Company Descriptive Book

of the organization named above.

DESCRIPTION.

Age 24 years; height 5 feet 10 inches.

Complexion Dark

Eyes Blk; hair Blk

Where born Campbell Co., Ky.

Occupation Farmer

ENLISTMENT.

When Oct 1, 1864.

Where Mustered Oct 1 '64 Greenupsb'g Ky

By whom Capt W C Grier; term 3 y'rs.

Remarks: Appointed Corp'l rank as such from Sept 10 '64

Beck

Copyist.

(383g)

J | 13 H. Art'y. | U.S.C.T.

Joseph Taylor

Pvt, Co. G, 13 Reg't U. S. Col'd H. Art'y.

Appears on

M. and D. Roll of Men Transferred

to the organization named above,

from Co. A, 21 U.S. Col'd Inft'y. Camp Nelson, Ky. June 29 1865.

Roll dated

When enlisted Oct 1, 1864.

Period for which enlisted 3 years.

When mustered in Oct 1, 1864.

Present or absent Present

Company to which assigned

Remarks:

Book mark:

Woodruff

(342) *Copyist.*

G | 13 H. Art'y. | U.S.C.T.

Joseph Taylor

Pvt, Co. ....., 13 Reg't U. S. Col'd H. Art'y.

Appears on

M. and D. Roll of Men Transferred

to the organization named above,

from Co....., 121 Reg't U. S. Colored Infantry.

Roll dated June 23, 1865.

When enlisted Oct. 1, 1864.

Period for which enlisted 3 years.

When mustered in Oct. 1, 1864

Present or absent Not stated

Company to which assigned G

Remarks: Credited to Lewis

Co. 9 D. Ky.

Book mark :

C. Williams

(342) *Copyist.*

J.P. | 13 H. Art'y. | U.S.C.T.

Joseph Taylor

Pvt., Co. G, 13 Reg't U. S. Col'd H. Art'y.

Age ..... years.

Appears on

Company Muster Roll*

for June 23 to 30, 1865.

Joined for duty and enrolled:

When Oct. 1, 1864

Where Greensburg, Ky.

Period 3 years

Mustered in:

When Oct. 1, 1864

Where Greensburg, Ky.

Present or absent Present

Stoppage, $1 07/100 for C. & G. E.

Due Gov't, $ 64/100 for Ordnance

Valuation of horse, $ 100

Valuation of horse equipments, $ 100

Remarks:

* First current roll. **No muster-in roll of this company on file.**

Book mark:

(3586) W. Anderson
Copyist.

8 | 13 H. Art'y. | U.S.C.T.

Joseph Taylor

Pvt., Co. G, 13 Reg't U. S. Col'd H. Art'y.

Appears on

Company Muster Roll

for July & Aug., 1865.

Present or absent Present

Stoppage, $ 1.07/100 for C & G. E.

Due Gov't, $ 00/100 for

Valuation of horse, $ 00/100

Valuation of horse equipments, $ 00/100

Remarks:

NEXT ROLL ON FILE MUSTER OUT.

Book mark:

W. Anderson

Copyist.

F | 13 H. Art'y. | U.S.C.T.

Joseph Taylor

Corpl, Co. G, 13 Reg't U. S. Col'd H. Art'y.

Appears on **Co. Muster-out Roll,** dated Louisville, Ky, Nov 18, 1865.

Muster-out to date Nov 18, 1865.

Last paid to June 30, 1865.

Clothing account:

Last settled ....., 186 ; drawn since $ 100

Due soldier $ ..... 100; due U. S. $ 18 55/100

Am't for cloth'g in kind or money adv'd $ 100

Due U. S. for arms, equipments, &c., $ 100

Bounty paid $ 100 00/100; due $ 100

Remarks: Appt Corpl Sept 10, 1865.

Due U S for rd lost Tompion .08.

* ~~He has the differens of a privates pay and noncommissioned officers duration from the 28 of Oct 1863 (date when last paid as the 121 Vol Inf) to the 23 of June~~ Love

Book mark: 1573–1879

A W Allen

(361) *Copyist.*

JAN. 16 5523697 1891

~~1865 (date of organization of the 13th Ala).~~

* As appears on Roll.

2040

Taylor. Lewis

Co E, 13 U.S.Col'd H. Art'y.

Private	Private

CARD NUMBERS.

1	5 5 1 6 0 1 1	26	
2	5 5 3 3 0 1 4	27	
3	5 5 2 2 5 9 5	28	
4	5 5 2 2 8 6 0	29	
5	5 5 2 2 9 9 8	30	
6	9 1 2 8 7 6 8	31	
7		32	
8		33	
9		34	
10		35	
11		36	
12		37	
13		38	
14		39	
15		40	
16		41	
17		42	
18		43	
19		44	
20		45	
21		46	
22		47	
23		48	
24		49	
25		50	

Book Mark:

See also

J | 13 H. Art'y. | U.S.C.T.

Lewis Taylor

....., Co. E, 13 Reg't U. S. Col'd H. Art'y.

Appears on

Company Descriptive Book

of the organization named above.

DESCRIPTION.

Age 14 years; height 6 feet 1 3/4 inches.

Complexion Copper

Eyes Black; hair Blk

Where born Jefferson Co. Ky.

Occupation Laborer

ENLISTMENT.

When Mar 27, 1865.

Where Louisville

By whom Capt Womack; term 3 y'rs.

Remarks: Supposed 21 Yr

Sept at the Organization of

the Company.

Reduced to the ranks

July 27 '65

(383*g*) Copyist.

F | 13 H. Art'y. | U.S.C.T.

Lewis Fayler

Appears with rank of Pvt on

Muster and Descriptive Roll of a Detachment of U. S. Vols. forwarded

for the 13 Reg't U. S. Col'd H. Art'y. Roll dated

Louisville Ky, Mch 27, 1865.

Where born Jefferson Co Ky

Age 44 yrs; occupation Farmer

When enlisted Mch 27, 1865

Where enlisted Louisville Ky

For what period enlisted 3 years.

Eyes blk; hair blk

Complexion blk; height 5 ft. 7¾ in.

When mustered in Mch 27, 1865.

Where mustered in Louisville Ky

Bounty paid $ 100; due $ 100

Where credited Jefferson Co 5 Dist Ky

Company to which assigned

Remarks:

Book mark:

Rose

(339) Copyist.

T | 13 H. Art'y. | U.S.C.T.

Louis Taylor

Appears with rank of 1st Sergt on

Muster and Descriptive Roll of a Detachment of U. S. Vols. ~~forwarded~~

Organized as C. E.
~~for the~~ 13 Reg't U. S. Col'd H. Art'y. Roll dated

Louisville Ky., Apr. 12, 1865

Where born Jefferson Ky.

Age 44 yrs; occupation Farmer

When enlisted March 27, 1865.

Where enlisted Louisville Ky

For what period enlisted 3 years.

Eyes Blk; hair Blk

Complexion Copper; height 6 ft. 3/4 in.

When mustered in March 27, 1865

Where mustered in Louisville Ky.

Bounty paid $ 100; due $ 100

Where credited

Company to which assigned

Remarks: 5th Dish Ky.

Book mark:

Harris

(339) Copyist.

F | 13 H. Art'y. | U.S.C.T.

Lewis Taylor.

2 M. Sgt., Co. E., 13 Reg't U. S. Col'd H. Art'y.

Age ..... years.

Appears on

Company Muster Roll*

for May & June, 1865.

Joined for duty and enrolled:

When Mar. 27, 1865.

Where Louisville, Ky.

Period 3 years

Mustered in:

When Mar. 27, 1865.

Where Louisville, Ky.

Present or absent Present.

Stoppage, $ 100 for .....

Due Gov't, $ 100 for .....

Valuation of horse, $ 100

Valuation of horse equipments, $ 100

Remarks: .....

* First current roll. No muster-in roll of this company on file.

Book mark: .....

H C Davis

(3586) *Copyist.*

T | 13 H. Art'y. | U.S.C.T.

Lewis Taylor

Pvt., Co. E, 13 Reg't U. S. Col'd H. Art'y.

Appears on

Company Muster Roll

for July & Aug., 1865.

Present or absent Present.

Stoppage, $ 100 for

Due Gov't, $ 100 for

NEXT ROLL ON FILE MUSTER OUT.

Valuation of horse, $ 100

Valuation of horse equipments, $ 100

Remarks: Appointed Serg't. Apl 12. 65. Reduced to private July 27. 65. Back pay due for difference between Serg't & pay & private's pay from April 12, 65 to June 30, 65. by reason of error in ~~Book mark~~ rolls to June 30, 65.

(over)

J C Davis

(358) Copyist.

JAN. 16 1891 ☆ 522860

in not giving date of
appointments.
Set-Dists. 2 bounty due $100.

T | 13 H. Art'y. | U.S.C.T.

Lewis Taylor

Pvt., Co. E, 13 Reg't U. S. Col'd H. Art'y.

Appears on **Co. Muster-out Roll,** dated Louisville, Ky., Nov. 18, 1865.

Muster-out to date Nov. 18, 1865.

Last paid to June 30, 1865.

Clothing account:

Last settled ....., 186 ; drawn since $ 100

Due soldier $ ..... 100; due U. S. $ 100

Am't for cloth'g in kind or money adv'd $ 2 92 100

Due U. S. for arms, equipments, &c., $ 100

Bounty paid $ ..... 100; due $ 100 00 100

Remarks: Appd Sgt. Apl 12, 65 due difference bet. Sgt & Pvt. Pay from Apl 12, 65 to June 30, 65 by reason of date of appt. not being given on last roll paid on. Reduced to ranks July 27, 65.

~~Book mark~~: Bookmark: 2568. 1878.

W. H. Davis

(361) *Copyist.*

2021

Taylor, Louis

Co G, 13 U.S.Col'd H.Art'y.

Private	Private

CARD NUMBERS.

1	18367	26	
2	17944	27	
3	23505	28	
4	23652	29	
5	23798	30	
6	91290800	31	
7		32	
8		33	
9		34	
10		35	
11		36	
12		37	
13		38	
14		39	
15		40	
16		41	
17		42	
18		43	
19		44	
20		45	
21		46	
22		47	
23		48	
24		49	
25		50	

Book Mark:

See also Leo 6.121.2586 Inf.

S 855700 Roaff
Arizona Coconino

J. P. Vincent Del.

G | 13 H. Art'y. | U.S.C.T.

Lewis Taylor

....., Co. G, 13 Reg't U. S. Col'd H. Art'y.

Appears on

Company Descriptive Book

of the organization named above.

DESCRIPTION.

Age 24 years; height 5 feet 6½ inches.

Complexion Brown

Eyes Blk; hair Blk

Where born Mt Carmel Ky

Occupation Laborer

ENLISTMENT.

When Dec 30, 1864.

*Mustered Jan 2 65

Where Greensbg Ky

By whom Capt E H Smith; term 3 y'rs.

* Capt W C Grier

Remarks:

Deserted July 17 '65 at

Camp Nelson Ky

Beck

(383g) Copyist.

J | 13 H. Art'y. | U.S.C.T.

Lewis Taylor

Art, Co. G, 13 Reg't U. S. Col'd H. Art'y.

Appears on

M. and D. Roll of Men Transferred

to the organization named above,

from Co C, 12th U.S. Col'd Inf'y. Camp Nelson Ky. June 23

Roll dated ....., 1865.

When enlisted Dec 30, 1864.

Period for which enlisted 3 years.

When mustered in Jan 2, 1865.

Present or absent Not stated

Company to which assigned .....

Remarks: .....

Book mark: .....

Rochester

(342) *Copyist.*

F | 13 H. Art'y. | U.S.C.T.

Lewis Taylor

Pvt., Co. ....., 13 Reg't U. S. Col'd H. Art'y.

Appears on

M. and D. Roll of Men Transferred

to the organization named above,

from Co....., 121 Reg't U. S. Colored Infantry.

Roll dated June 23, 1865.

When enlisted Dec. 30, 1864.

Period for which enlisted 3 years.

When mustered in Jan. 2, 1865.

Present or absent Not stated.

Company to which assigned G

Remarks: Credited to Lewis Co. 9 D. Ky.

Book mark :

C. Williams,

(342) *Copyist.*

J | 13 H. Art'y. | U.S.C.T.

Lewis Taylor

Pvt., Co. G, 13 Reg't U. S. Col'd H. Art'y.

Age ..... years.

Appears on

Company Muster Roll*

for from June 23 to 30, 1865.

Joined for duty and enrolled:

When Dec. 30, 1864

Where Greencastle, Ky.

Period 3 years

Mustered in:

When Jan. 2, 1865.

Where Greencastle, Ky

Present or absent Present

Stoppage, $1.30/100 for C. & G. C.

Due Gov't, $100 for

Valuation of horse, $100

Valuation of horse equipments, $100

Remarks:

* First current roll. No muster-in roll of this company on file.

Book mark:

(3586) W. Anderson
Copyist.

J | 13 H. Art'y. | U.S.C.T.

Lewis Taylor

Pvt., Co. G, 13 Reg't U. S. Col'd H. Art'y.

Appears on

Company Muster Roll

for July & Aug., 1863.

Present or absent Present

Stoppage, $1.31/100 for

Due Gov't, $100 for

Valuation of horse, $100

Valuation of horse equipments, $100

Remarks:

NEXT ROLL ON FILE MUSTER OUT.

Book mark:

W. Anderson
Copyist.

G | 13 H. Art'y. | U.S.C.T.

Louis Taylor

Priv. Co. G, 13 Reg't U. S. Col'd H. Art'y.

Appears on **Co. Muster-out Roll,** dated Louisville, Ky Jun 18, 1865.

Muster-out to date Jun 18, 1865.

Last paid to June 30, 1865.

Clothing account:

Last settled ....., 186 ; drawn since $ 100

Due soldier $ ..... 100; due U. S. $ 16 30/100

Am't for cloth'g in kind or money adv'd $ 100

Due U. S. for arms, equipments, &c., $ 100

Bounty paid $ 100 00/100; due $ 100

Remarks: Due Ud for ord lost Tompion .08.

Book mark:

A. W. Allen

(361) *Copyist.*

2022

Taylor. Matt

Co 7th, 13 U.S.Col'd H. Art'y.

Corporal	Corporal.

CARD NUMBERS.

1	55 18744	26	
2	55 19144	27	
3	55 25547	28	
4	55 25693	29	
5	55 25844	30	—
6	91296 61	31	
7		32	
8		33	
9		34	
10		35	
11		36	
12		37	
13		38	
14		39	
15		40	
16		41	
17		42	
18		43	
19		44	
20		45	
21		46	
22		47	
23		48	
24		49	
25		50	

Book Mark:

See also Co E. 72 USCI Inf

F | 3 Hurty **U. S. C. T.**

Matt Taylor

....., Co. F, 13 Reg't U. S. Col'd Hurty

Appears on

Company Descriptive Book

of the organization named above.

DESCRIPTION.

Age 24 years; height 5 feet 8 inches.

Complexion Dk

Eyes Dk; hair Dk

Where born Nicholas Co. Ky

Occupation Farmer

ENLISTMENT.

When Apr 13, 1865.

Where Covington Ky

By whom Col Mitchell, term 3 y'rs.

Remarks: Recruited Co F

June 1865

E O'Sullivan

(383*a*) Copyist.

I | **13** H. Art'y. | **U.S.C.T.**

Matt Taylor

Corp., Co. M, 13 Reg't U. S. Col'd H. Art'y.

Appears on

M. and D. Roll of Men Transferred

to the organization named above,

from Co E 72 U.S. Col Inf

Roll dated July 3, 1865.

When enlisted Apl 13, 1864.

Period for which enlisted 3 years.

When mustered in Apl 13, 1864.

Present or absent not stated

Company to which assigned

Remarks: Appointed Corpl June 1/65 Credited to Gallatin S.D. 8, 6th D. Ky

Book mark :

(342) J Thiemann *Copyist.*

S | 13 H. Art'y. | U.S.C.T.

Matt Taylor

Corp., Co....., 13 Reg't U. S. Col'd H. Art'y.

Appears on

M. and D. Roll of Men Transferred

to the organization named above,

from 72 U.S.C.I

Roll dated July 3, 1863.

When enlisted Apl 13, 1861.

Period for which enlisted 3 years.

When mustered in Apl 13, 1861.

Present or absent Not Stated

Company to which assigned M

Remarks:

6 Dist. Ky

Book mark:

J Hammond

(342) *Copyist.*

J | 13 H. Art'y. | U.S.C.T.

Matt Taylor

Corpl, Co. M, 13 Reg't U. S. Col'd H. Art'y.

Age ..... years.

Appears on

Company Muster Roll*

for June 23 to 30, 1865.

Joined for duty and enrolled:

When April 13, 1865.

Where Covington Ky

Period 3 years

Mustered in:

When April 13, 1865.

Where Covington Ky

Present or absent Present

Stoppage, $ 100 for .....

Due Gov't, $ 100 for .....

Valuation of horse, $ 100

Valuation of horse equipments, $ 100

Remarks: Promoted to Corpl June 1-65

* First current roll. No muster-in roll of this company on file.

Book mark: .....

Abbott

(3588) Copyist.

I | 13 H. Art'y. | U.S.C.T.

Matt Taylor

Corpl, Co. M, 13 Reg't U. S. Col'd H. Art'y.

Appears on

Company Muster Roll

for July & Aug, 1865.

Present or absent Present

Stoppage, $ 100 for

Due Gov't, $ 100 for

Valuation of horse, $ 100

Valuation of horse equipments. $ 100

Remarks: Promtd to Corpl June 1-65

NEXT ROLL ON FILE MUSTER OUT.

Book mark:

Abbott

(358) Copyist.

T | 13 H. Art'y. | U.S.C.T.

Matt Taylor

Corp'l, Co. M, 13 Reg't U. S. Col'd H. Art'y.

Appears on **Co. Muster-out Roll,** dated Louisville Ky, Nov 8, 1865.

Muster-out to date Nov 18, 1865.

Last paid to June 30, 1865.

Clothing account:

Last settled ....., 186 ; drawn since $ 100

Due soldier $ ..... 100 ; due U. S. $ 5 25/100

Am't for cloth'g in kind or money adv'd $ 100

Due U. S. for arms, equipments, &c., $ 100

Bounty paid $ 100 100 ; due $ 100

Remarks: .....

Book mark: U21 - P24 - 68

Q6604

(361) *Copyist.*

2023

Taylor, Richard

Co a, 13 U.S.Col'd H. Art'y.

Private	Private

CARD NUMBERS.

1	5-5-16410	26	
2	5-5-16557	27	
3	5-5-19834	28	
4	5-5-19986	29	
5	5-5-20616	30	
6	912805-3	31	
7	4315-4168	32	
8	43136004	33	
9		34	
10		35	
11		36	
12		37	
13		38	
14		39	
15		40	
16		41	
17		42	
18		43	
19		44	
20		45	
21		46	
22		47	
23		48	
24		49	
25		50	

Book Mark:

See also

13 H. Art'y. | U.S.C.T.

Richard Taylor

....., Co. A, 13 Reg't U. S. Col'd H. Art'y.

Appears on

Company Descriptive Book

of the organization named above.

DESCRIPTION.

Age 21 years; height 5 feet 5 1/4 inches.

Complexion Brown

Eyes Brown; hair Blk

Where born Jessamine Co Kentucky

Occupation Farmer

ENLISTMENT.

When Oct 3, 1864.

Where Bowling Green

By whom Col Hobson; term 3 y'rs.

Remarks: Died in Hospital at Smithland Ky of Small Pox January 7th 1865

Deadrick

Copyist.

(383g)

13th Ky.

T		U.S.A. T

Richard Taylor

Appears with rank of Private on

Muster and Descriptive Roll

of a Detachment U.S.

Recruits Bowling Green, Ky

. Roll dated

Bowling Green Ky Oct 6, 1864.

Where born Jasper, Ky.

Age 20 years; occupation Farmer

When enlisted Oct 3, 1864.

Where enlisted Bowling Green

For what period enlisted 3 years.

Eyes brown; hair black

Complexion brown; height 5 ft. 5 14 in.

When mustered in , 186 .

Where mustered in

Bounty paid $ 100; due $ 100

Clothing account:

Last settled , 186 ; drawn since $ 18 30/100

Date of first muster Oct 3, 1864.

Company to which assigned

Remarks: New Recruit

Warren Co. Free

Book mark:

W. Muirhall

(356m) Copyist.

I 13 H. A. U.S.C.T.

Richard Taylor

Appears with rank of Pvt on

Muster and Descriptive Roll

of a Detachment of U.S. Colored Recruits forward for 13 Regt U.S. Colored Artly. Roll dated Bowling Green Ky, Oct 31, 1864.

Where born Jasper Co Ky

Age 20 years; occupation Farmer

When enlisted Oct 17, 1864.

Where enlisted B Green Ky

For what period enlisted 3 years.

Eyes Brwn; hair Blk

Complexion Brwn; height 5 ft. 5 1/4 in.

When mustered in , 186 .

Where mustered in

Bounty paid $ 100; due $ 100

Clothing account:

Last settled , 186 ; drawn since $ 8 30/100

Date of first muster Oct 3, 1864.

Company to which assigned

Remarks: New recruit

Warren Co - Free

Book mark :

E L Wolf

(356m) Copyist.

I | 13 H. Art'y. | U.S.C.T.

Richard Taylor

Appears with rank of Artificer on

Muster and Descriptive Roll of a Detachment of U. S. Vols. forwarded

Organized Co. C.
for the 13 Reg't U. S. Col'd H. Art'y. Roll dated

Camp Nelson, Ky., June 23, 1865.

Where born Trinity, Ky.

Age 36 y'rs; occupation Blacksmith

When enlisted Oct. 17, 1864.

Where enlisted B. Green, Ky.

For what period enlisted 3 years.

Eyes Brown; hair Black

Complexion Brown; height 5 ft. 3½ in.

When mustered in Oct. 17, 1864.

Where mustered in B. Green Ky.

Bounty paid $ 100; due $ 100

Where credited

Company to which assigned A

Remarks: Artificer

Book mark:

Wagner

(339) Copyist.

F 13 H. Arty | **U.S.C.T.**

Richard Taylor

Appears with rank of Pvt. on

Muster and Descriptive Rolls of Detachments of U. S. Vols. ~~forwarded~~ transferred as

for the 13 Reg't U. S. Col'd H. Arty Roll dated

Camp Nelson Ky. June 23, 1865.

Where born Jessamine Co. Ky.

Age 21 **y'rs; occupation** Farmer

When enlisted Oct 3, 1864.

Where enlisted Camp Nelson Ky.

For what period enlisted 3 **years.**

Eyes Brown; **hair** Blk

Complexion Brown; **height** 5 **ft.** 5¼ **in.**

When mustered in Oct. 3, 1864.

Where mustered in Camp Nelson Ky.

Bounty paid $ 100; **due $** 100

Where credited

Company to which assigned A.

Remarks: Died at Smithland,

Ky of Small Pox June

6/65

Book mark:

Wagner

(339) **Copyist.**

F | 13 H. Art'y. | U.S.C.T.

Richard Gaylor

Pvt, Co. A, 13 Reg't U. S. Col'd H. Art'y.

Age ..... years.

Appears on

Company Muster Roll*

for Nov. 31, 1864.

Joined for duty and enrolled:

When Oct 3, 186X.

Where Bowling Green Ky

Period 3 years

Mustered in:

When Oct 3, 186X.

Where Bowling Green Ky

Present or absent Present

Stoppage, $.....100 for .....

Due Gov't, $.....100 for.....

Valuation of horse, $.....100

Valuation of horse equipments, $.....100

Remarks: .....

* First current roll. No muster-in roll of this company on file.

Book mark: .....

W. J. Hughes

(3586) Copyist.

I | 13 H. Art'y. | U.S.C.T.

Richard Saylor

Pvt., Co. A, 13 Reg't U. S. Col'd H. Art'y.

Appears on

Company Muster Roll

for Jan'y Feb, 186 5.

Present or absent.....

Stoppage, $.....100 for .....

.....

Due Gov't, $.....100 for .....

.....

Valuation of horse, $.....100

Valuation of horse equipments, $.....100

Remarks: .....

Died at Smithland

Ky., Small Pox, Jan'y 6 5

.....

.....

.....

.....

.....

Book mark: .....

W. T. Hughes

(358) Copyist.

I | 13 H. Art'y. | U.S.C.T.

Richard Taylor

Priv., Co. A, 13 Reg't U. S. Col'd H. Art'y.

Appears on **Co. Muster-out Roll,** dated Louisville Ky Nov 18, 1865.

Muster-out to date ....., 186 .

Last paid to Never paid....., 186 .

Clothing account:

Last settled ....., 186 ; drawn since $.....100

Due soldier $.....100; due U. S. $.....100

Am't for cloth'g in kind or money adv'd $.....100

Due U. S. for arms, equipments, &c., $.....100

Bounty paid $.....100; due $.....100

Remarks: Died at Smithland Ky of Typhoid fever June 7, 1865

Book mark: .....

---

(361) W. D. Hughes *Copyist.*

Taylor, Richard

P, Co. A; 13 U.S.C.H.A.
Reg't

1 Enclosures.

Bed Cards	Descriptive Lists
Burial Records	Final Statements 1
Certs. of Dis. for Discharge	Furloughs
C. M. Charges	Med. Des. Lists
Med. Certificates	Orders

Other papers relating to—

Admission to Hosp'l	Furlough
Casualty Sheet (Officer's)	Med. Examination
Confinement	Misc. Information
Contracts	Pay or Clothing
Death or Effects	Personal Reports
Desertions	Rank
Discharge from Hosp'l	Transfer to Hosp'l
Discharge from Service	Transfer to V. R. C.
Duty	Transportation

Taylor, Richard

B, Co. A, 13 Reg't U. S. C. A.

1 **Enclosures.**

Bed Cards	Final Statements
Burial Records	Furloughs or L. of A.
Certs. of Dis. for Discharge	Med. Certificates
C. M. Charges	Med. Des. Lists
Descriptive Lists	Orders
Discharge Certificates	Pris. of War Record
Enlistment Papers	Resignations

Other papers relating to—

Admission to Hosp'l	Furlough or L. of A.
Casualty Sheet	Med. Examination
Confinement	Misc. Information
Contracts	Pay or Clothing
Death or Effects 1	Personal Reports
Desertion	Rank
Discharge from Hosp'l	Transfer to Hosp'l
Discharge from Service	Transfer to V. R. C.
Duty	Transportation

Extract from Act of Congress.

SEC. 12. *And be it further enacted*, That the fees of agents and attorneys for making out and causing to be executed the papers necessary to establish a claim for a pension, bounty, and other allowance before the Pension Office, under this act, shall not exceed the following rates: For making out and causing to be duly executed a declaration by the applicant, with the necessary affidavits, and forwarding the same to the Pension Office, with the requisite correspondence, ten dollars; which sum shall be received by such agent or attorney in full for all services in obtaining such pension, and shall not be demanded or received, in whole or in part, until such pension shall be obtained; and the sixth and seventh sections of an act entitled "An act to grant pensions," approved July [fourteenth,] eighteen hundred and sixty-two, are hereby repealed.

SEC. 13. *And be it further enacted*, That any agent or attorney who shall, directly or indirectly, demand or receive any greater compensation for his services under this act than is prescribed in the preceding section of this act, or who shall contract or agree to prosecute any claim for a pension, bounty, or other allowance under this act, on the condition that he shall receive a per centum upon any portion of the amount of such claim, or who shall wrongfully withhold from a pensioner or other claimant the whole or any part of the pension or claim allowed and due to such pensioner or claimant, shall be deemed guilty of a high misdemeanor, and, upon conviction thereof, shall, for every such offense, be fined not exceeding three hundred dollars, or imprisoned at hard labor not exceeding two years, or both, according to the circumstances and aggravations of the offense.

Approved July 4, 1864.

NOTE 10.—If any soldier is charged a higher fee than that allowed by the above act, he should report the fact and the name of the agent to the Adjutant General, in order that steps may be taken to have the same refunded.

ADJUTANT GENERAL'S OFFICE.
Jany 1st 1865
Inventory sent 2d Auditor.

FINAL STATEMENT

OF

Richard Taylor - Private

Co. B 13th Reg't of U.S.C.A.

VOLUNTEERS.

Dated January 1st 1865.

NOTE 1.—*Two* of these certificates (or duplicates) are to be given to each Volunteer Soldier or drafted man who may be discharged without being mustered out, (Final Statements are never given to men mustered out of service.) that he may at once receive from the Paymaster the pay, &c., due him, and the captain or other COMMISSIONED officer commanding the company will certify to the act of the delivery of the duplicate certificates; with these certificates the Soldier is "entitled to" his *discharge*, and should also present his discharge to the Paymaster to have the payment endorsed on it. The discharge is to be given back to the Soldier by the Paymaster; the latter only retaining as his vouchers the duplicate certificates.

NOTE 2.—If the Soldier is entitled to pay for the use of his horse, the Company Commander will certify to that fact on the back of both these final statements, and also to the time he has pay due for having been so mounted on his own horse.

NOTE 3.—When a Soldier is furnished with final statements, his descriptive list, if he has one, should be taken up by the officer who gives the Soldier these statements, and endorsed with a statement to this effect by the officer. The endorsement should exhibit a full statement of the time for which the Soldier was allowed pay on his final statements, the clothing account, and all other charges against him or in his favor, so as to comprise a complete exhibit of his account. It will then be transmitted to the Company Commander of the Soldier, who will enter all the data necessary to a full understanding of the Soldier's account on the muster roll upon which the Soldier's discharge is reported. The descriptive list will then be destroyed. The object of this is, that the remaining portion of the Soldier's account may be settled upon the receipt of these muster rolls, and the Soldier receive any pay or allowances that may be due him at the time of his discharge, and which may not appear on his last final statements from the fact that his descriptive list is incomplete. These accounts for back pay, &c., are settled by the 2d Auditor of the Treasury Department.

NOTE 4.—Charges for loss or injury to ordnance, horse equipments, and other miscellaneous charges, should appear under the heading of "Other Stoppages."

NOTE 5.—Bounty paid by State authorities, and not by the United States, will not be entered on this statement.

NOTE 6.—Amounts due the Sutler and Laundress must be entered on the muster roll on which the discharge, death, desertion, &c., is reported, as well as on the final statement, otherwise the amount cannot be collected from the United States.

NOTE 7.—This blank will be used for deceased volunteers and drafted men, as well as for others.

NOTE 8.—Where a Soldier dies in Hospital or on detached service, his descriptive list, if he has one, should be sent with his final statements, in duplicate, to the Adjutant General, Washington, D. C.

NOTE 9.—If the soldier is a drafted man or substitute, the space for time, &c., of enrolled, should contain only the word *drafted* or *substitute*, as the case may be. If the Soldier is a "VETERAN," (or RECRUIT,) the words *as a veteran*, (or *recruit*,) as the case may be, should be interlined after the words *mustered into the service of the U. S.* A statement of all the installments of *Veteran* or *Recruit Bounty* RECEIVED by the Soldier must be made on the back of each final statement.

Lieut
Co

I certify, on honor, that Richard Taylor, a Private of Captain J. R. Smiths Company (A) of the 13 Regiment of M. I. C. & A. VOLUNTEERS, ~~of the State of~~ ——, born in Jessamine Co, State of Kentucky, aged 20 years; 5 feet 5¼ inches high; Brown complexion, Brown eyes, Black hair, and by occupation a Farmer, who joined for service and was enrolled (see Note 9) on the 9th day of October, 1864, at Bowling Green Ky by Capt A G Hobson, for the period of Three years, and mustered into the service of the United States on the Third day of October, 1864, at Bowling Green Ky, by Lept A G Hobson; and having served HONESTLY and FAITHFULLY with his Company to the present date, is now entitled to a DISCHARGE by reason of Death

Died of Typhoid Fever Jan 3rd 1865 Six Mounting Hospital

The said Richard Taylor was last ~~paid by Paymaster~~ ——, ~~to include the~~ Enlistment day ~~of~~ ——, ~~186 , and~~ has pay due him from ~~that time~~ to the present date; he is entitled to pay and subsistence for TRAVELING to place of enrollment, and whatever other allowances are authorized to volunteer soldiers, drafted men, or militia, so discharged. He has received from the United States CLOTHING amounting to $51 $\frac{89}{100}$ dollars, since the Third day of October, 1864, ~~when his clothing account was last settled. He has received from the United States —— $\frac{}{100}$ dollars advanced BOUNTY.~~

There is to be stopped from him, on account of the State of ——, or other authorities, for CLOTHING, &c., received on entering service, —— $\frac{}{100}$ dollars; and for other stoppages, viz: ——

—— $\frac{}{100}$ dollars.

He has been furnished with TRANSPORTATION in kind from the place of his discharge to ——; and he has been SUBSISTED for TRAVELING to his place of enrollment, up to the ——, 186 .

He is indebted to ——, SUTLER, —— $\frac{}{100}$ dollars.

He is indebted to ——, LAUNDRESS, —— $\frac{}{100}$ dollars.

Given in Duplicate, at Smithland Ky, this 8th day of January, 1865.

J R Smiths
Capt
Commanding Company.

[A. G. O. No 95—Form.]

(131)

ARTICLES OF WAR.

ART. 95. When any non-commissioned officer or soldier shall die, or be killed in the service of the United States, the then commanding officer of the troop or company shall, in the presence of two other commissioned officers, take an account of what effects he died possessed of, above his arms and accoutrements, and transmit the same to the office of the Department of War, which said effects are to be accounted for, and paid to the representatives of such deceased non-commissioned officer or soldier. And in case any of the officers, so authorized to take care of the effects of deceased officers and soldiers, should, before they have accounted to their representatives for the same, have occasion to leave the regiment or post, by preferment or otherwise, they shall, before they be permitted to quit the same, deposit in the hands of the commanding officer, or of the assistant military agent, all the effects of such deceased non-commissioned officers and soldiers, in order that the same may be secured for, and paid to, their respective representatives.

ARMY REGULATIONS—EDITION OF 1863.

DECEASED SOLDIERS.

Par. 152. Inventories of the effects of deceased non-commissioned officers and soldiers, required by the 95th Article of War, will be forwarded to the Adjutant General, by the commander of the company to which the deceased belonged, and a duplicate of the same to the colonel of the regiment. Final statements of pay, clothing, &c., in duplicate, will be sent to the Adjutant General with one copy of the inventory. When a soldier dies at a post or station absent from his company, it will be the duty of his immediate commander to furnish the required inventory and final statements, and, at the same time, to forward to the commanding officer of the company to which the soldier belonged, a report of his death, specifying the date, place, and cause; to what time he was last paid, and the money or other effects in his possession at the time of his decease; which report will be noted on the next muster roll of the company to which the man belonged. Each inventory will be endorsed, "Inventory of the effects of ——— ———, late of company (—,) ——— regiment of ———, who died at ———, the —— day of ———, 186–." If a legal representative receive the effects, it will be stated in the report. If the soldier leave no effects, the fact will be reported.

Par. 153. Should the effects of a deceased non-commissioned officer or soldier not be administered upon within a short period after his decease, they shall be disposed of by a Council of Administration, under the authority of the commanding officer of the post, and the proceeds deposited with the Paymaster, to the credit of the United States, until they shall be claimed by the legal representatives of the deceased.

Par. 154. In all such cases of sales by the Council of Administration, a statement in detail, or account of the proceeds, duly certified by the Council and commanding officer, accompanied by the Paymaster's receipt for the proceeds, will be forwarded by the commanding officer to the Adjutant General. The statement will be endorsed, "Report of the proceeds of the effects of ——— ———, late of company (—,) ——— regiment of ———, who died at ———, the —— day of ———, 186–."

NOTE 1.—The effects in all cases, when called for, should be turned over to the legal representative, without further authority from the Adjutant General. When the effects are turned over to the relatives of the deceased before these inventories are sent to the Adjutant General, their receipts therefor should be attached to the inventories. In all other cases, one copy will be sent with a letter of transmittal direct to the Adjutant General, and a duplicate retained by the officer.

NOTE 2.—Particular care should be taken to take receipts in duplicate from the Paymaster for any funds turned over to him; one copy should be sent direct to the Adjutant General and one retained by the officer.

INVENTORY OF THE EFFECTS

OF

Richard Taylor — Private

Late of Company A

13th *Reg't of* U. S. C. H. & A.

Volunteers, who died at Smithtown, N.Y.

on the 7th *day of* January 1865.

RECEIVED Jan 17 1871

Inventory of the effects of Richard Taylor late a Privett of Captain J. R. Smiths Company A of the 13th Regiment of K.S.C.T.A. Volunteers, who was enrolled as a — at — in the State of — on the — day of — 186 , and mustered into the service of the United States as a Privett on the 3d day of October 1864, at Bowling Green Ky in Company —, 13th Regiment of A.D.C.T.C.A. Volunteers, to serve Three years or during the war; he was born in Jasper Co in the State of Kentucky: he was 20 years of age, 5 feet 5 1/4 inches high, Brown complexion, Brown eyes, Black hair, and by occupation, when enrolled, a Farmer; he died in Hospitel, at Smithland Ky on the 7th day of January 1865, by reason of Smell Pox

INVENTORY.

Articles.	No.	Articles.	No.	Articles.	No.
Hats		Pairs trowsers		Knapsacks	
Caps		Pairs flannel drawers			
Forage Caps		Pairs cotton drawers			
Great coats		Flannel shirts			
Uniform coats		Cotton shirts			
Uniform jackets		Pairs boots			
Flannel sack coats		Pairs shoes			
Blouses		Pairs socks			
S'able frocks		Blankets			
Fatigue overalls		Haversacks			

Money.		
	Specie	$
	Notes	$

I CERTIFY, ON HONOR, that the above inventory comprises all the effects of Privett Richard Taylor, deceased, and that the effects are in the hands of — at — to be disposed of by a Council of Administration.

(DUPLICATES.)

J. R. Smiths
Capt
Commanding the Company.

STATION: Smithland Ky

DATE: January 6th 1865

[A. G. O. No. 104.]

2024

Taylor, Richard

Co. D., 13 U.S.Col'd H. Art'y.

Private	Private

CARD NUMBERS.

1	5-5-1 7 2 4 6	26	
2	5-5-2 2 3 6 5	27	
3	5-5-2 2 5-1 3	28	
4	9 1 2 8 6 1 2	29	
5		30	
6		31	
7		32	
8		33	
9		34	
10		35	
11		36	
12		37	
13		38	
14		39	
15		40	
16		41	
17		42	
18		43	
19		44	
20		45	
21		46	
22		47	
23		48	
24		49	
25		50	

Book Mark:

See also Co B. 120 U.S.C.T. Inf

5792 19th Street
Oakland, California

I | 13 H. Arty | U.S.C.T.

Richard Taylor

....., Co. D, 13 Reg't U. S. Col'd H. Arty

Appears on

Company Descriptive Book

of the organization named above.

DESCRIPTION.

Age 19 years; height 5 feet 3½ inches.

Complexion Blk

Eyes Blk; hair Mulatto

Where born Ohio Co Kentucky

Occupation Farmer

ENLISTMENT.

When Nov 22, 1864.

Where Owensboro Ky

By whom Cap Partridge; term 3 y'rs.

Remarks:

Deserted

(383½) Copyist.

I | **13** H. Art'y. | **U.S.C.T.**

Richard Taylor

Appears with rank of Pvt on

Muster and Descriptive Roll of a Detachment of U. S. Vols. ~~for warded~~ Reorganized

for the 13 Reg't U. S. Col'd H. Art'y. Roll dated

Not Dated, , 186 .

Where born Ohio Co. Kentucky

Age 19 y'rs; occupation Farmer

When enlisted Nov 22, 1864.

Where enlisted Owensboro, Ky,

For what period enlisted 3 years.

Eyes Blk; hair Blk

Complexion Mulatto; height 5 ft. 3½ in.

When mustered in Nov 24, 1864.

Where mustered in Owensboro, Ky,

Bounty paid $ 100; due $ 100

Where credited 2 Cong. Dist. Ky

Company to which assigned I

Remarks: Transferred from 120 Regt. U.S.C.T. Co. B.

Book mark:

B Taylor

(339) Copyist.

Private | U.S.C.T.

Nathaniel Jaquins

Art., Co. D, 13 Reg't U. S. Col'd Inf'y

Appears on

Company Muster Roll

for May & June, 1865.

Present or absent Present

Stoppage, $ 100 for

Due Gov't, $ 100 for

Valuation of horse, $ 100

Valuation of horse equipments, $ 100

Remarks: Mustered into U.S. Service from Co. "B" 120 Reg't N.G.I. June 23. 1865 Present in Hospital Jeffersonville Indiana Due a/c Enlistment Gov't Bounty

FROM SECOND AUDITOR'S ROLL.

NEXT ROLL ON FILE MUSTER OUT.

Book mark:

Leger

(358) *Copyist.*

T | **13 H. Art'y.** | **U.S.C.T.**

Richard Taylor

Pvt., Co. D, 13 Reg't U. S. Col'd H. Art'y.

Appears on **Co. Muster-out Roll,** dated Louisville Ky, Nov 18, 186 5.

Muster-out to date Nov 18, 186 5.

Last paid to X Pay due from Enl, 186 .

Clothing account:

Last settled ....., 186 ; drawn since $ 100

Due soldier $ 25 03/100; due U. S. $ 100

Am't for cloth'g in kind or money adv'd $ 100

Due U. S. for arms, equipments, &c., $ 100

Bounty paid $ 100 00/100; due $ 100

Remarks: .....

.....

.....

.....

.....

.....

Book mark: .....

X Compare D

Leger

(361) *Copyist.*

2025

Taylor. Robert

Co S, 13 U.S.Col'd H. Art'y.

Private | Private,

CARD NUMBERS.

1	5-5-1729/	26	
2	5-5-22228	27	
3	5-5-1955-69	28	
4	5-5-2255-9	29	
5	9/28616	30	
6		31	
7		32	
8		33	
9		34	
10		35	
11		36	
12		37	
13		38	
14		39	
15		40	
16		41	
17		42	
18		43	
19		44	
20		45	
21		46	
22		47	
23		48	
24		49	
25		50	

Book Mark:

See also

L + 13 H. Arty | U.S.C.T.

Robert Taylor

....., Co. D, 13 Reg't U. S. Col'd H. Arty

Appears on

Company Descriptive Book

of the organization named above.

DESCRIPTION.

Age 18 years; height 5 feet 5 inches.

Complexion Blk

Eyes Woolly; hair Blk

Where born Mississippi

Occupation Boatman

ENLISTMENT.

When Mar 16, 1863.

Where Springfield Ill

By whom Capt Keyes; term 1 y'rs.

Remarks: Deserter

Deadrick

(383y) Copyist.

G | 13 H. Art'y. | U.S.C.T.

Robert Taylor

Appears with rank of Pvt on

Muster and Descriptive Roll of a Detachment of U. S. Vols. ~~forwarded~~ organized

for the 13 Reg't U. S. Col'd H. Art'y. Roll dated

Not dated, ..., 186 .

Where born Mississippi

Age 18 y'rs; occupation Boatman

When enlisted Mar 16, 1865.

Where enlisted Springfield Ill.

For what period enlisted 1 years.

Eyes Blk; hair Woolly

Complexion Blk; height 5 ft. 5 in.

When mustered in Mar 16, 1865.

Where mustered in Springfield, Ill.

Bounty paid $ 100; due $ 100

Where credited 8 Reg. Dist, Ill.

Company to which assigned D

Remarks: Deserted Apl. 5th 1865

Book mark:

B Taylor

(339) Copyist.

F | **13 H. Art'y.** | **U.S.C.T.**

Robert Taylor

Pvt, Co. D, 13 Reg't U. S. Col'd H. Art'y.

Age ..... years.

Appears on

Company Muster Roll*

for Dec 30, 186 5.

Joined for duty and enrolled:

When Mar 16, 186 .

Where Springfield Ill

Period 1 years

Mustered in:

When Mar 16, 186 .

Where Springfield

Present or absent .....

Stoppage, $.....100 for .....

Due Gov't, $.....100 for .....

Valuation of horse, $.....100

Valuation of horse equipments, $.....100

Remarks: Deserted Smithland Ky Apr 3rd 1865.

* First current roll. No muster-in roll of this company on file.

Book mark: .....

Leger

(3586) *Copyist.*

K | 18 Army **U.S.C.T.**

Taylor Robert

Pvt, Co L 9, 13 Reg't U. S. Col'd Hvy Art'y

Appears on

Descriptive List of Deserters

dated May 19, 1865.

Deserted:

When April 3, 1865.

Where Chesterfield, Va.

Arrested:

When ....., 186 .

Where .....

Remarks: .....

Book mark: .....

Pvt Co L 9 Regt

(851) *Copyist.*

T | **13 H. Art'y.** | **U.S.C.T.**

Robert Taylor

Art, Co. D, 13 Reg't U. S. Col'd H. Art'y.

Appears on **Co. Muster-out Roll,** dated Louisville Ky, Nov 18, 1865.

Muster-out to date ....., 186 .

Last paid to Pay due from enlistment, 186 .

Clothing account:

Last settled ....., 186 ; drawn since $ 100

Due soldier $ ..... 100 ; due U. S. $ 100

Am't for cloth'g in kind or money adv'd $ 100

Due U. S. for arms, equipments, &c., $ 100

Bounty paid $ ..... 100 ; due $ 100

Remarks: Deserted Oct 3/65 from Portsmouth Va

Book mark: .....

Leger

(361) *Copyist.*

2026

Taylor Robert

Co H, 13 U.S.Col'd H. Art'y.

Private	Private

CARD NUMBERS.

1	5 5 1 8 5 3 3	26	
2	5 5 1 7 9 5 6	27	
3	5 5 2 3 9 5 3	28	
4	5 5 2 4 1 0 8	29	
5	5 5 2 4 2 5 3	30	
6	9 1 2 9 2 2 4	31	
7		32	
8		33	
9		34	
10		35	
11		36	
12		37	
13		38	
14		39	
15		40	
16		41	
17		42	
18		43	
19		44	
20		45	
21		46	
22		47	
23		48	
24		49	
25		50	

Book Mark:

See also Geo. F. 121. 2nd S.C. Inf.

9 | 13 H. Art'y. | U.S.C.T.

Robert Taylor

....., Co. H, 13 Reg't U.S. Col'd H. Art'y.

Appears on

Company Descriptive Book

of the organization named above.

DESCRIPTION.

Age 18 years; height 5 feet 8½ inches.

Complexion dark

Eyes drk; hair drk

Where born Kanawah Co Va

Occupation Laborer

ENLISTMENT.

When May 29, 1863.

Where Pikeston Ky

By whom Lt Gen Clapp; term 3 y'rs.

Remarks:

Book

(383g) Copyist.

J | 13 H. Art'y. | U.S.C.T.

Robert Taylor

Pvt., Co. B, 13 Reg't U. S. Col'd H. Art'y.

Appears on

M. and D. Roll of Men Transferred

to the organization named above,

from Co. F, 121 Reg't U. S. Colored Infantry.

Roll dated Camp Nelson, Ky. June 23, 1865.

When enlisted May 29, 1865.

Period for which enlisted 3 years.

When mustered in June 5, 1865.

Present or absent Not stated

Company to which assigned

Remarks:

Book mark:

Rochester

(342) *Copyist.*

E | 13 H. Art'y. | U.S.C.T.

Robert Taylor

Pvt., Co. ....., 13 Reg't U. S. Col'd H. Art'y.

Appears on

M. and D. Roll of Men Transferred

to the organization named above,

from Co....., 121 Reg't U. S. Colored Infantry.

Roll dated June 26, 1865.

When enlisted May 29, 1865.

Period for which enlisted 3 years.

When mustered in June 5, 1865.

Present or absent Not stated

Company to which assigned H

Remarks: Credited to Pike Co. 9 S. Ky.

Book mark :

C. Williams,

Copyist.

(342)

I | 13th A | **U.S.C.T.**

Robert Taylor

Pvt., Co. K, 13 Reg't U. S. Col'd Inf.

Age ____ years.

Appears on

Company Muster Roll*

for May June, 1865.

Joined for duty and enrolled:

When May 25, 1865.

Where Pikesville Md

Period 3 years.

Mustered in:

When June 5, 1865.

Where Chambersburg Pa

Present or absent Present

Stoppage, $ 100 for ____

Due Gov't, $ 100 for ____

Valuation of horse, $ 100

Valuation of horse equipments, $ 100

Remarks: ____

* First current roll. No muster-in roll of this company on file.

Book mark: ____

(358*b*) *Copyist.*

13 H. Art'y. | U.S.C.T.

Robert Taylor

A, Co. H, 13 Reg't U. S. Col'd H. Art'y.

Appears on

Company Muster Roll

for July & Aug, 1865.

Present or absent Present

Stoppage, $ 100 for

Due Gov't, $ 100 for

Valuation of horse, $ 100

Valuation of horse equipments, $ 100

Remarks:

NEXT ROLL ON FILE MUSTER OUT.

Book mark:

Merrick

(358) *Copyist.*

13 H. Art'y. | U.S.C.T.

Robert Taylor

Pt, Co. K, 13 Reg't U. S. Col'd H. Art'y.

Appears on **Co. Muster-out Roll,** dated Louisville Ky, Nov 18, 1865.

Muster-out to date Nov 18, 1865.

Last paid to June 30, 1865.

Clothing account:

Last settled ....., 186 ; drawn since $ 100

Due soldier $ ..... 100 ; due U. S. $ 16 24/100

Am't for cloth'g in kind or money adv'd $ 100

Due U. S. for arms, equipments, &c., $ 100

Bounty paid $ ..... 100 ; due $ 100

Remarks: .....

Book mark: .....

H Merrick

(361) *Copyist.*

2027

Taylor. Robert

Co L, 13 U.S.Col'd H.Art'y.

Private	Private

CARD NUMBERS.

1	55 19380	26	
2	55 19133	27	
3	55 25220	28	
4	55 25368	29	
5	55 25493	30	
6	912 95-35	31	
7		32	
8		33	
9		34	
10		35	
11		36	
12		37	
13		38	
14		39	
15		40	
16		41	
17		42	
18		43	
19		44	
20		45	
21		46	
22		47	
23		48	
24		49	
25		50	

Book Mark:

See also Reg Co. 72 USColInf.

D. 3013337 Ponca
O 3033960 P O Rec'd
N 30544120 Ord Co
P.O. Added 8/23/23 CL
" " " 11/18/24 CL

Dr Trussed Co

J | 13 H. Art'y. | U.S.C.T.

Robert Taylor

....., Co. ~, 13 Reg't U.S. Col'd H. Art'y.

Appears on

Company Descriptive Book

of the organization named above.

DESCRIPTION.

Age 18 years; height 5 feet 6 inches.

Complexion Dk

Eyes Blk; hair Blk

Where born Green Co Ky

Occupation Laborer

ENLISTMENT.

When Feb 9, 1865.

Where London Ky

By whom Capt Fiddler, term 3 y'rs.

Remarks: .....

E. H. Hopewell

(383g) Copyist.

Pvt | 13 H. Art'y. | U.S.C.T.

Robert Taylor

Pvt, Co. L, 13 Reg't U. S. Col'd H. Art'y.

Appears on

M. and D. Roll of Men Transferred

to the organization named above,

from Co L 72 US C Inf

Roll dated Camp Nelson Ky, July 3, 1865.

When enlisted Feb 7, 1865.

Period for which enlisted 3 years.

When mustered in Feb 7, 1865.

Present or absent not stated

Company to which assigned

Remarks: 1st Dist Ky

Book mark :

J Merchant

(342) *Copyist.*

T | 13 H. Art'y. | U.S.C.T.

Robert Taylor

Pvt., Co....., 13 Reg't U. S. Col'd H. Art'y.

Appears on

M. and D. Roll of Men Transferred

to the organization named above,

from 72 U.S.C.I.

Roll dated July 3, 186[illegible].

When enlisted Feb 3, 186[illegible].

Period for which enlisted 3 years.

When mustered in Feb 9, 186 .

Present or absent Not Stated

Company to which assigned L

Remarks:

4 Dist. Ky

Book mark :

J Underwood

(342) *Copyist.*

I | 13 H. Art'y. | U.S.C.T.

Robert Taylor

Pvt, Co. L, 13 Reg't U. S. Col'd H. Art'y.

Age ..... years.

Appears on

Company Muster Roll*

for June 30, 1865.

Joined for duty and enrolled:

When Feb 9, 1865.

Where Lebanon Ky

Period 3 years

Mustered in:

When Feb 9, 1865.

Where Lebanon Ky

Present or absent Present

Stoppage, $ 100 for .....

Due Gov't, $ 100 for .....

Valuation of horse, $ 100

Valuation of horse equipments, $ 100

Remarks: Stop 95 cts Haversack lost

* First current roll. No muster-in roll of this company on file.

Book mark: .....

Leger

(3586) Copyist.

I | 13 H. Art'y. | U.S.C.T.

Robert Taylor

Pvt, Co. L, 13 Reg't U. S. Col'd H. Art'y.

Appears on

Company Muster Roll

for July & Aug, 1865.

Present or absent Present

Stoppage, $ 100 for

Due Gov't, $ 100 for

Valuation of horse, $ 100

Valuation of horse equipments, $ 100

Remarks: Took 95 Cts one haversack.

NEXT ROLL ON FILE MUSTER OUT.

Book mark:

Leger

(358) Copyist.

Y | **13 H. Art'y.** | **U.S.C.T.**

Robert Simpson

A, Co. K, 13 Reg't U. S. Col'd H. Art'y.

Appears on **Co. Muster-out Roll,** dated Louisville Ky, June 16, 186 5.

Muster-out to date June 16, 186 5.

Last paid to June 30, 186 5.

Clothing account:

Last settled ....., 186 ; drawn since $ 100

Due soldier $ ..... 100 ; due U. S. $ 100

Am't for cloth'g in kind or money adv'd $ 27 22/100

Due U. S. for arms, equipments, &c., $ 100

Bounty paid $ 100 100 ; due $ 100

Remarks: .....

Book mark: 366 P.M.G. May 9/66

Logan

(361) *Copyist.*

Taylor. Robert 2928

Co M., 13 U.S.Col'd H. Art'y.

Private	Private

CARD NUMBERS.

1	55188552	26	
2	551914 0	27	
3	5 5 2 5 6 5 5	28	
4	5 5 2 5 7 9 9	29	
5	5 5 2 5 9 3 2	30	
6	9 1 2 9 6 6 5 1	31	
7		32	
8		33	
9		34	
10		35	
11		36	
12		37	
13		38	
14		39	
15		40	
16		41	
17		42	
18		43	
19		44	
20		45	
21		46	
22		47	
23		48	
24		49	
25		50	

Book Mark:

See also Leo E. 72 U.S. Col'd Inf

S-2997-97-P.O. Mx 71,
N 3033960. PO Box

Dft Innsent Ex

E | 13 Ky. Cav. U. S. C. T.

Robert Dayton Co. 2

....., Co. M, 13 Reg't U. S. Col'd Cav'y

Appears on

Company Descriptive Book

of the organization named above.

DESCRIPTION.

Age 18 years; height 5 feet 4 inches.

Complexion Dark

Eyes Dk; hair Dk

Where born Va

Occupation Laborer

ENLISTMENT.

When Jan 11, 1865.

Where Scottsville O

By whom Capt Dorr; term 3 y'rs.

Remarks: Substitute

E Hibbs

(383*a*) Copyist.

I | 13 H. Art'y. | U.S.C.T.

Robert Taylor

Pvt, Co. M, 13 Reg't U. S. Col'd H. Art'y.

Age ..... years.

Appears on

Company Muster Roll*

for June 23 to 30, 1865.

Joined for duty and enrolled:

When ....., 186 .

Where .....

Period 3 years

Mustered in:

When Jan 11, 1865.

Where Ironton O

Present or absent Present

Stoppage, $ 100 for .....

Due Gov't, $ 100 for .....

Valuation of horse, $ 100

Valuation of horse equipments, $ 100

Remarks: Substitute

Asst to Corps Apr 22. 65

* First current roll. No muster-in roll of this company on file.

Book mark:

(Over)

Colored

(3586) Copyist.

JAN. 16 5525655 1891 ☆

Red to Pat May 29-05

Due Us for Ord cost $1.00
for C + Eq C cost $12.05

Amt due Soldier for like
Amt deposited with P. M. at Draft
Rendezvous Columbus Ohio $230.00

13 H. Art'y. | U.S.C.T.

Robert Taylor

Pvt., Co. M, 13 Reg't U. S. Col'd H. Art'y.

Appears on

M. and D. Roll of Men Transferred

to the organization named above,

from Co E 7 2 U.S.C. Inf

Roll dated July 3, 186 5.

When enlisted , 186 .

Period for which enlisted 3 years.

When mustered in Jan 16, 186 5.

Present or absent Not stated

Company to which assigned

Remarks: Appointed Corp May 2/65- Reduced to Rank May 29/65- Credited to Adams Co. Green Tp, 11th D. - O. Sub. for Albert Lockhart Amt-due Soldier for like amt. deposited with P. M. under G. O No 305 A G. O. Dec 27/64 $ 230.

Book mark: C. 1617 Kg

J Hudelson

(342) *Copyist.*

T | 13 H. Art'y. | U.S.C.T.

Robert Taylor

Pvt., Co....., 13 Reg't U. S. Col'd H. Art'y.

Appears on

M. and D. Roll of Men Transferred

to the organization named above,

from 7 2 11 C S I.

Roll dated July 3, 1865.

When enlisted ....., 186 .

Period for which enlisted 3 years.

When mustered in Jan 11, 1865.

Present or absent Not stated

Company to which assigned M

Remarks:

11 Dist. D.

Sub. for Albert Lockart

Book mark:

J Hudson

(342) *Copyist.*

J | 13 H. Art'y. | U.S.C.T.

Robert Taylor

Pvt, Co. M, 13 Reg't U. S. Col'd H. Art'y.

Appears on

Company Muster Roll

for July & Aug, 1865.

Present or absent Present

Stoppage, $ 1 00/100 for Ordnance Lost

for 6 & 8 Lost $12,05

Due Gov't, $ 100 for

Valuation of horse, $ 100

Valuation of horse equipments. $ 100

Remarks: Appd Corpl Ap 22-65

Rec to Pvt May 29-65

NEXT ROLL ON FILE MUSTER OUT.

Book mark:

Abbott

(358) Copyist.

7 | **13 H. Art'y.** | **U.S.C.T.**

Robert Taylor

Pvt, Co. M, 13 Reg't U. S. Col'd H. Art'y.

Appears on **Co. Muster-out Roll,** dated Louisville Ky, Nov 18, 1865.

Muster-out to date Nov 18, 1865.

Last paid to June 30, 1865.

Clothing account:

Last settled ....., 186 ; drawn since $ 100

Due soldier $ ..... 100; due U. S. $ 78 76/100

Am't for cloth'g in kind or money adv'd $ 100

Due U. S. for arms, equipments, &c., $ 100

Bounty paid $ ..... 100; due $ 100

Remarks: .....

.....

.....

.....

.....

.....

Book mark: .....

A Goff

.....

(361) *Copyist.*

2029

Taylor. Robert

Co M, 13 U.S.Col'd H. Art'y.

Sergeant. | Sergeant.

CARD NUMBERS.

1	55 17731	26	
2	55 19143	27	
3	55 25434	28	
4	55 25683	29	
5	55 19632	30	
6	55 25959	31	
7	91296600	32	
8		33	
9		34	
10		35	
11		36	
12		37	
13		38	
14		39	
15		40	
16		41	
17		42	
18		43	
19		44	
20		45	
21		46	
22		47	
23		48	
24		49	
25		50	

Book Mark:

See also Leo E. 72 USC Inf.

I 13 N. Navy **U.S.C.T.**

Robert Taylor No. 1

....., Co. L, 13 Reg't U. S. Col'd Navy

Appears on

Company Descriptive Book

of the organization named above.

DESCRIPTION.

Age 33 years; height 5 feet 11 inches.

Complexion Dk

Eyes Dk; hair Dk

Where born Va

Occupation Farmer

ENLISTMENT.

When Dec 17, 1864.

Where Toledo O

By whom Capt Kent; term 3 y'rs.

Remarks: Substitute de-
livered Sept 10/65

(383*g*) E D Spaconable

Copyist.

J | 13 H. Art'y. | U.S.C.T.

Robert Taylor

Sergt, Co. M, 13 Reg't U. S. Col'd H. Art'y.

Age ..... years.

Appears on

Company Muster Roll*

for June 23 to 30, 1865.

Joined for duty and enrolled:

When ....., 186 .

Where .....

Period 3 years

Mustered in:

When Dec 17, 1864.

Where Toledo O

Present or absent Present

Stoppage, $ 100 for .....

Due Gov't, $ 100 for .....

Valuation of horse, $ 100

Valuation of horse equipments, $ 100

Remarks: Appd Corpl Apl 22-65
Promoted Sergt June 1-65

* First current roll. **No muster-in roll of this company on file.**

Book mark: .....

(over) Abbott

Copyist.

JAN. 16 1891 ☆ 5525534

Amt due Soldier for like
Amt deposited with P.M. at
Draft Rendezvous Columbus
Ohio $3450
Substitute

T | 13 H. Art'y. | U.S.C.T.

Robert Taylor

Sgt, Co. M, 13 Regt U. S. Col'd H. Art'y.

Appears on

M. and D. Roll of Men Transferred

to the organization named above,

from Co E 72 N.Y. Col Inf

Roll dated July 3, 1865.

When enlisted ____, 186 .

Period for which enlisted 3 years.

When mustered in Dec 17, 1864.

Present or absent Not stated

Company to which assigned ____

Remarks: Appointed Corpl May 2/65. appointed Sgt June 1/65 Credited to 5th Ward Pole do 10 Dt. Co. Sub. for Henry Dirkman. Amt. Due Soldier for like amt. deposited with P.M. Under S.O. No 305 A.G.O. Dec 27/64 # 3457

Book mark: ____

(342) J Underwood *Copyist.*

13 H. Art'y. | U.S.C.T.

Robert Taylor

Sgt., Co....., 13 Reg't U. S. Col'd H. Art'y.

Appears on

M. and D. Roll of Men Transferred

to the organization named above,

from 12 U. S. C. I.

Roll dated July 3, 1865.

When enlisted ....., 186 .

Period for which enlisted ..... 3 years.

When mustered in Dec 17, 1864.

Present or absent not stated

Company to which assigned 12 C

Remarks:

10 Dist. O.
Sub. for Henry Dickerson

Book mark :

J Underwood

(342) *Copyist.*

T | 13 H. Art'y. | U.S.C.T.

Robert Taylor

Sergt., Co. M, 13 Reg't U. S. Col'd H. Art'y.

Appears on

Company Muster Roll

for July & Aug, 1865.

Present or absent Present

Stoppage, $ 100 for

Due Gov't, $ 100 for

NEXT ROLL ON FILE MUSTER OUT.

Valuation of horse, $ 100

Valuation of horse equipments. $ 100

Remarks: Apptd Corp. Apl 22-65
Prated Sergt June 1-1865
Amount due Soldier for
like amount deposited with
P M at Draft Rendezvous
Columbus Ohio $34.50

Book mark:

Abbott

(358) Copyist.

T. 137 Maty U.S.C.T.

R. Taylor

Serg't, Co. M, 13 Reg't U. S. Col'd Maty

Appears on

Descriptive List of Deserters

dated Sept 30, 1865.

Deserted:

When Sept 10, 1863.

Where Crab Orchard

Arrested:

When ....., 186 .

Where .....

Remarks: .....

Book mark: .....

Edward

(351) Copyist.

J | 13 H. Art'y. | U.S.C.T.

Robert Taylor

Sergt, Co. K, 13 Reg't U. S. Col'd H. Art'y.

Appears on **Co. Muster-out Roll,** dated Louisville Ky, Nov 18, 1865.

Muster-out to date ____, 186 .

Last paid to June 30, 1865.

Clothing account:

Last settled ____, 186 ; drawn since $ ____ 100

Due soldier $ ____ 100; due U. S. $ ____ 100

Am't for cloth'g in kind or money adv'd $ ____ 100

Due U. S. for arms, equipments, &c., $ ____ 100

Bounty paid $ ____ 100; due $ ____ 100

Remarks: Stoppage 6 4 & Coat $10.32
Reduced to Ranks Sept 21-65
per SO No 21 Hd Qrs 13 US C H A
Deserted

Book mark:

Abbott

(361) *Copyist.*

2030

Taylor. Roland

Co G, 13 U.S.Col'd H. Art'y.

Private	Private

CARD NUMBERS.

1	55 1836 6	26	
2	55 1794 3	27	
3	55 2350 6	28	
4	55 2363 3	29	
5	55 1961 9	30	
6	55 1965 0	31	
7	55 2382 5	32	
8	91 2908 1	33	
9		34	
10		35	
11		36	
12		37	
13		38	
14		39	
15		40	
16		41	
17		42	
18		43	
19		44	
20		45	
21		46	
22		47	
23		48	
24		49	
25		50	

Book Mark:

See also Geo a. 121 2 US 6 Inf

F | 13 H. Art'y. | U.S.C.T.

Roland Taylor

....., Co. F, 13 Reg't U.S. Col'd H. Art'y.

Appears on

Company Descriptive Book

of the organization named above.

DESCRIPTION.

Age ... years; height ... feet ... inches.

Complexion .....

Eyes ... ; hair .....

Where born .....

Occupation .....

ENLISTMENT.

When ... May 26, 186 5.
* Mustered June 1 '65

Where ... Maysville Ky
* Greenupsb'g, Ky.

By whom Capt C. M. Knapp ; term 3 y'rs.
* Capt W C Gem

Remarks: .....

.....

.....

.

J | 13 H. Art'y. | U.S.C.T.

Roland Taylor

Art, Co. G, 13 Reg't U. S. Col'd H. Art'y.

Appears on

M. and D. Roll of Men Transferred

to the organization named above,

from Co A 2d U.S. Col'd Inf'y

Roll dated Camp Nelson, Ky. June 28, 1865.

When enlisted June 26, 1865.

Period for which enlisted 3 years.

When mustered in June 10, 1865.

Present or absent Not stated

Company to which assigned

Remarks:

Book mark:

Rochester

(342) *Copyist.*

G | 13 H. Art'y. | U.S.C.T.

Roland Taylor

Pvt., Co. ....., 13 Reg't U. S. Col'd H. Art'y.

Appears on

M. and D. Roll of Men Transferred

to the organization named above,

from Co....., 121 Reg't U. S. Colored Infantry.

Roll dated June 23, 1865.

When enlisted May 26, 1865.

Period for which enlisted 3 years.

When mustered in June 19, 1865

Present or absent Not stated

Company to which assigned G

Remarks: Credited to Clarke

Co. F 2. Ky.

C. Williams

(342) *Copyist.*

J | 13 H. Art'y. | U.S.C.T.

Roland Taylor

Pvt., Co. G, 13 Reg't U. S. Col'd H. Art'y.

Age ..... years.

Appears on

Company Muster Roll*

for from June 23 to 30, 1865.

Joined for duty and enrolled:

When May 26, 1865.

Where Maysville, Ky

Period 3 years

Mustered in:

When June 10, 1865.

Where Greensburg, Ky.

Present or absent Present

Stoppage, $ 100 for .....

Due Gov't, $ 100 for .....

Valuation of horse, $ 100

Valuation of horse equipments, $ 100

Remarks: .....

* First current roll. No muster-in roll of this company on file.

Book mark: .....

W. Andrews

Copyist.

(3586)

30 | 13 H. Art'y. | U.S.C.T.

Holand Taylor

Pvt, Co. G, 13 Reg't U. S. Col'd H. Art'y.

Appears on

Company Muster Roll

for July & Aug, 1865.

Present or absent

Stoppage, $ 100 for

Due Gov't, $ 100 for

Valuation of horse, $ 100

Valuation of horse equipments, $ 100

Remarks: Absent without leave since July 17/65.

NEXT ROLL ON FILE MUSTER OUT.

Book mark:

(358) W. Anderson Copyist.

C 13 Kty U.S.C.T.

Boland Taylor

Pvt, Co. D, 13 Reg't U. S. Col'd Kty

Appears on

Descriptive List of Deserters

dated Sept 30, 1865.

Deserted:

When July 17, 1865.

Where Camp Nelson Ky.

Arrested:

When ....., 186 .

Where .....

Remarks: .....

.....

.....

.....

.....

.....

Book mark: .....

.....

(351) *Copyist.*

D 13 Wisc U.S.C.T.

V. Taylor

Corp't, Co. G, 13 Reg't U. S. Col'd Wisc

Appears on

Descriptive List of Deserters

dated Sept 30, 1865.

Deserted:

When July 17, 1865.

Where Camp Nelson

Arrested:

When ....., 186 .

Where .....

Remarks: .....

Book mark: .....

Blumenl

(851) *Copyist.*

F | 13 H. Art'y. | U.S.C.T.

Roland Taylor

Priv., Co. G, 13 Reg't U. S. Col'd H. Art'y.

Appears on **Co. Muster-out Roll,** dated Louisville, Ky., Nov 18, 1865.

Muster-out to date ....., 186 .

Last paid to Never paid, 186 .

Clothing account:

Last settled ....., 186 ; drawn since $ 100

Due soldier $ ..... 100 ; due U. S. $ 100

Am't for cloth'g in kind or money adv'd $ 100

Due U. S. for arms, equipments, &c., $ 100

Bounty paid $ ..... 100 ; due $ 100

Remarks: Deserted July 17, 1865, from Camp Nelson, Ky.

Book mark:

A W Allen

(361) *Copyist.*

2031

Taylor. Silas

Co. G, 13 U.S.Col'd H. Art'y.

Private	Private

CARD NUMBERS.

1	5-5-33135	26	
2	5-52271 2	27	
3	5-52285-6	28	
4	5-52994	29	
5	91287769	30	
6	43151694	31	
7		32	
8		33	
9		34	
10		35	
11		36	
12		37	
13		38	
14		39	
15		40	
16		41	
17		42	
18		43	
19		44	
20		45	
21		46	
22		47	
23		48	
24		49	
25		50	

Book Mark:

See also

Postage

A. 2185661 Romania

J | 13 H. Art'y. | U.S.C.T.

Silas Taylor

....., Co. E, 13 Reg't U. S. Col'd H. Art'y.

Appears on

Company Descriptive Book

of the organization named above.

DESCRIPTION.

Age 19 years; height 5 feet 6¼ inches.

Complexion Black

Eyes Blk; hair Blk

Where born Oldham Co, Ky.

Occupation Farmer

ENLISTMENT.

When Mar 29, 1863.

Where Louisville

By whom Capt Womack; term 3 y'rs.

Remarks:

Beck

(383g) **Copyist.**

13 USCT

1 | USCT.

Silas Taylor

Appears with rank of Recr on

Muster and Descriptive Roll

of Detachment of Us Colored Recruits forwarded

Roll dated

Louisville Ky, Mch 29, 186 5.

Where born Oldham Co Ky

Age 19 years; occupation farmer

When enlisted Mch 29, 186 5.

Where enlisted Louisville Ky

For what period enlisted 3 years.

Eyes blk; hair blk

Complexion blk; height 5 ft. 6¼ in.

When mustered in Mch 29, 186 5.

Where mustered in Louisville

Bounty paid $ 100; due $ 100

Clothing account:

Last settled , 186 ; drawn since $ 100

Date of first muster Mch 29, 186 5.

Company to which assigned

Remarks: To be credited to Oldham Co Ky.

Book mark :

L L Barton

(356m) Copyist.

T | 13 H. Art'y. | U.S.C.T.

Silas Taylor

Appears with rank of Pvt on

Muster and Descriptive Roll of a Detachment of U. S. Vols. ~~forwarded~~

Organized as Co. E.

~~for the~~ 13 Reg't U. S. Col'd H. Art'y. Roll dated

Louisville Ky. Apr 12, 1865.

Where born Oldham Ky.

Age 19 y'rs; occupation Farmer

When enlisted Mch 29, 1865.

Where enlisted Louisville Ky.

For what period enlisted 3 years.

Eyes Blk; hair Blk

Complexion Blk; height 5 ft. 6¼ in.

When mustered in Mch 29, 1865.

Where mustered in Louisville Ky.

Bounty paid $ 100; due $ 100

Where credited

Company to which assigned

Remarks: 5th Dist. Ky.

Book mark: P 1926 Ky.

Harris

Copyist.

T | 13 H. Art'y. | U.S.C.T.

Silas Taylor

Pvt, Co. E, 13 Reg't U. S. Col'd H. Art'y.

Age ..... years.

Appears on

Company Muster Roll*

for May + June, 1865.

Joined for duty and enrolled:

When Mar. 29, 1865.

Where Louisville, Ky.

Period 3 years

Mustered in:

When Mar. 29, 1865.

Where Louisville, Ky.

Present or absent Present.

Stoppage, $ 100 for .....

Due Gov't, $ 100 for .....

Valuation of horse, $ 100

Valuation of horse equipments, $ 100

Remarks: .....

* First current roll. No muster-in roll of this company on file.

Book mark: .....

W C Davis

(3586) Copyist.

F | 13 H. Art'y. | U.S.C.T.

Silas Taylor

Pvt, Co. E, 13 Reg't U. S. Col'd H. Art'y.

Appears on

Company Muster Roll

for July + Aug., 1865.

Present or absent Present.

Stoppage, $ 100 for

Due Gov't, $ 100 for

Valuation of horse, $ 100

Valuation of horse equipments, $ 100

Remarks: 1st Sust. of bounty due. $100.

NEXT ROLL ON FILE MUSTER OUT.

Book mark:

WC Davis

(358) Copyist.

T | 13 H. Art'y. | U.S.C.T.

Silas Taylor

Pvt., Co. E, 13 Reg't U. S. Col'd H. Art'y.

Appears on Co. Muster-out Roll, dated Louisville Ky, Nov. 18, 1865.

Muster-out to date Nov. 18, 1865.

Last paid to June 30, 1865.

Clothing account:

Last settled ....., 186 ; drawn since $ 100

Due soldier $ ..... 100; due U. S. $ 1 36/100

Am't for cloth'g in kind or money adv'd $ 100

Due U. S. for arms, equipments, &c., $ 100

Bounty paid $ ..... 100; due $ 100 00/100

Remarks: .....

Book mark: P. 1926 Ky. 437 5-75.
V. 216 P. 36, 75.

J. C. Davis

(361) *Copyist.*

Taylor Silas

L, Co. C, 13 U.S.C.H.A. Reg't

7 **Enclosures.**

Bed Cards	Descriptive Lists
Burial Records	Final Statements
Certs. of Dis. for Discharge	Furloughs
C. M. Charges	Med. Des. Lists
Med. Certificates	Orders

Encl. ppr 1

Other papers relating to—

Admission to Hosp'l	Furlough
Casualty Sheet (Officer's)	Med. Examination
Confinement	Misc. Information 1
Contracts	Pay or Clothing
Death or Effects	Personal Reports
Desertions	Rank
Discharge from Hosp'l	Transfer to Hosp'l
Discharge from Service	Transfer to V. R. C.
Duty	Transportation

DECLARATION OF RECRUIT.

I, ... desiring to volunteer as a soldier in the ARMY OF THE UNITED STATES, for the term of *Three Years*, DO DECLARE That I am ..... years and ..... months of age; that I have never been discharged from the United States service on account of disability or by sentence of a court-martial, or by order before the expiration of a term of enlistment; and I know of no impediment to my serving honestly and faithfully as a soldier for three years.

GIVEN at .....

the ..... day of .....

Witness:

.....

.....

Consent of Parent or Guardian in case of a Minor, if a Free Man, or in the case of a Slave, of the Person to whom he owes Service:

I, ... DO CERTIFY, That I am

the .....

.....

that the said ..... is ..... years of age; and I do freely give my CONSENT to his volunteering as a SOLDIER in the Army of the United States, for the period of THREE YEARS, under the conditions of the laws of the United States.

GIVEN at .....

the ..... day of .....

Witness:

.....

.....

(A. G. O. No. 74 & 76.)

NOTE 1.—This blank will be used for enlistments of United States colored troops. They will be made out in duplicate in all cases—one to accompany the recruiting return of the superintendent (not the recruiting officer) to the Adjutant General, and one to accompany the accounts of the officer who pays bounty, &c.

NOTE 2.—An enlistment holds to precede payment of pay, bounty, pension, &c. A muster-in roll, must in all cases, precede the Adjutant General's Office as evidence of muster-in. The mustering officer, commissary, or assistant commissary of musters, as the case may be, will countersign both enlistments as having mustered the soldiers into the service of the United States before either of them is given to the disbursing officer.

UNITED STATES COLORED TROOPS ENLISTMENT.

STATE OF ~~FORCE~~ OF

Kentucky Jefferson

I, Silas Taylor born in Alabama

in the State of Kentucky aged 19 years

and by occupation a farmhand Do HEREBY ACKNOWLEDGE to

have volunteered 29 day of March 1863 —

to serve as a **Soldier** in the **Army of the United States of America,** for the period of THREE YEARS, unless sooner discharged by proper authority: Do also agree to accept such bounty, pay, rations, and clothing, as are, or may be, established by law for the U. S. colored troops.

And I, Silas Taylor

do solemnly swear that I will bear true faith and allegiance to the **United States of America,** and that I will serve them honestly and faithfully against all their enemies or opposers whomsoever; and that I will observe and obey the orders of the President of the United States, and the orders of the officers appointed over me, according to the Rules and Articles of War.

Sworn and subscribed to, at Louisville Ky

this 29 day of March 1863 — his Silas X Taylor mark

Before G. M. Munach

Capt & Asst. Qu. Mr. 3-d Div 9th Ky

I CERTIFY, ON HONOR, That I have carefully examined the above named Volunteer agreeably to the General Regulations of the Army, and that, in my opinion, he is free from all bodily defects and mental infirmity, which would in any way disquality him from performing the duties of a soldier.

J. Gardner

EXAMINING SURGEON.

I CERTIFY, ON HONOR, That I have minutely inspected the Volunteer, Silas Taylor previously to his enlistment, and that he was entirely sober when enlisted; that, to the best of my judgment and belief, he is of lawful age; and that, in accepting him as duly qualified to perform the duties of an able-bodied soldier, I have strictly observed the regulations which govern the recruiting service. This soldier has blue *eyes*, black *hair*, black *complexion*, is 5 *feet* 6 4 *inches* high.

G. M. Munach

Asst Qu Mr 3d Div RECRUITING OFFICER OR AGENT.

Mustered into the United States Service 29 day of March 1863 —

G. M. Munach

J. Powers Asst Qu Mr Mustering Officer

Mustered into the service of the United States, for three years or during the war, from date of enlistment, in Company ..... Regiment of ..... Volunteers, on the ..... day of ....., 186 , at .....

War Department,

ADJUTANT GENERAL'S OFFICE,

Washington, Apl 11th 1867.

Respectfully returned to the Commission for the State of Ky, *with the information that* Silas Saylor *was enlisted at* Louisville Ky *March 29th 1865 and was mustered in as* Pvt Co. E 13th U.S. C Art Hy. *March 29th 1865*

C. Ky

T. M. Hazard

Asst. Adj't General.

cmmb

No.

APPLICATION OF

Joseph W. E. Powers

OF

Abram Cotton

FOR COMPENSATION FOR SLAVE, NAMED

Silas Saylor

Enlisted 29 March, 1864,

In Co. E, 13th Regiment,

U. S. COLORED TROOPS.

Received Feby 21, 1867

COMPENSATION AWARDED

_____, 186____

_____ *Dollars.*

_____

President Board of Claims.

Claimant's Attorney,

R. T. DURRETT,

Louisville, Ky.

Claimant's Post-office address,

_____

_____

LOUISVILLE COURIER PRINT.

CERTIFICATE OF LOYALTY. [Form 7.]

State of Kentucky,

County of ..... } ss.

I, H. R. Hays, M. D. P. M.

at Beards Station Oldham Co. Ky.

hereby certify, that I am personally, and by reputation, acquainted with Joseph E. Lovere, who, under the provisions of the 24th Section of the Act of Congress, approved February 24th, 1864, and the 2d Section of the Act approved July 28th, 1866, is claiming compensation for a slave named Silas Taylor, alleged to have been mustered into the United States military service on the 29th day of March, 1864, at Louisville Ky, and assigned to Company E, of the 12th Regiment United States Colored Troops; that at said date of enlistment, said Joseph E. Lovere was a loyal citizen and resident of said County and State; that he was loyal during the war with the so-called Confederate States of America, and has been ever since; and that he is worthy of full faith and credit in any statements he has or may make touching said claim for compensation; and that his witnesses Edwd Matthews, James Vmeur & R Moorhead are loyal and worthy of full faith and credit

Witness my hand and official designation, at Beards Station Kentucky, this 31 day of Dec, 1866.

H. R. Hays P M

at Beards Station

Ky

FORM No. 4.

CERTIFICATE OF ENLISTMENT.

Louisville, Ky., October 25th 1866.

It appears from the records of the office of the Chief Mustering Officer of Kentucky, that Silas Taylor (colored,) the property of ——— (as stated in said records,) born in Oldham county, State of Kentucky, 19 years of age, 5 feet 6¼ inches high, and by occupation a ———, was on the 29th day of March 1865. at Louisville State of Kentucky enlisted by Capt E H Womack and mustered into the service of the United States, on the 29th day of March 1865, at Louisville State of Kentucky by Capt E H Womack, for the term of 3 years.

The organization rolls of U. S. Colored Troops on file in this office also show that the above named ——— was, by ———, commandant of camp of rendezvous at ———, State of Kentucky, asigned to Company ——, ——— Regiment U. S. Colored ———, on the ——— day of ——— 186—.

Co. E

W. H. Dalton 1st Lieut 2d U.S.C.
In Chg of Office

[This certificate is given for information, but not as a final voucher for compensation or as establishing either the loyalty or ownership of the claimant.]

No. _____ [Form 1.]

CLAIM OF

Joseph E. Powers

FOR COMPENSATION FOR SLAVE NAMED

Silas Taylor

I, Joseph E. Powers, a loyal citizen and resident of _____ county of Oldham, State of Kentucky, upon oath, state that I am entitled to, and hereby claim compensation, under the provisions of the 24th section of the act of Congress, approved February 24th, 1864, and of the 2d section of the act, approved July 28th, 1866, for my slave named Silas Taylor, who was mustered into the military service of the United States on the 29 day of March, 1864, at Louisville Ky. by Capt J. H. Monack and assigned to the 13th U.S. Regiment of United States Colored Troops, Company E; that, at the date of said enlistment, I was a loyal citizen and resident of said county and State, and then and there owner of and entitled to the services of said slave; that I did not acquire said slave subsequent to said enlistment, but had a valid title to him at the date of said enlistment, and previous thereto: I having acquired my title to him and my ownership over him as follows, to wit: Owned the mother of said Silas Taylor he was born my slave and remained mine ever since

that when said slave went into the service he was able-bodied, sound of body and mind, and worth $ 500; that the claim I hereby make for compensation for said slave is just and true, and due me as owner of and entitled to his services, and I ought to recover for him the sum of $ 500, under the provisions of said acts; that this claim for compensation, as owner, is for the identical slave who was a Servant in Company E, of the 13th U.S. Regiment United States Colored Troops, as aforesaid; and that I have received from the Government no compensation or bounty for said slave, nor made any application except this, therefor.

I do further swear that I have never joined, or been concerned in, any insurrection or rebellion; that I have never borne arms against the United States; that I have never given any aid, countenance, counsel or encouragement to any person or persons engaged, or whom I had reason to believe were about to engage, in insurrection, rebellion, or armed hostility against the United States; that I have never sought nor accepted, nor attempted to exercise the functions of any office, civil or military, nor to perform any service whatever under any authority, or pretended authority in hostility to the United States: that I have not yielded a voluntary support to any insurrection, rebellion or pretended government, authority, power or constitution, within the United States, hostile thereto. And I do further swear that, to the best of my knowledge and ability, I have supported and defended, and will continue to support and defend, the United States, against all enemies, foreign and domestic; and that I have supported, defended and obeyed, and will continue to support, defend and obey, the Constitution and Laws of the United States; that I will bear true faith and allegiance to the same; and that I take this oath freely, without any mental reservation or purpose of evasion; So help me God.

And, in consideration of said enlistment and of said compensation, I Joseph E. Powers do hereby manumit, set free and forever release said Silas Taylor from all service due me —his freedom to commence from the 29 day of March, 186 4, the date of said enlistment into the military service of the United States.

I herewith file and make part hereof a certificate of enlistment and descriptive roll of said slave, and proof of my loyalty and ownership as required by said acts, and General Orders No. 329, 1863, War Department, Adjutant General's Office.

My Post-Office address is Pewee Station. County of Oldham, State of Kentucky, and I hereby direct that all communications to me, touching this claim, be sent under cover to R. T. DURRETT, of Louisville, Kentucky, who is hereby appointed and constituted my true and lawful attorney, to prosecute this claim for me, and who is hereby authorized and empowered to receive and receipt for any award, order, draft, certificate, voucher, warrant, papers or money that may be issued in the adjustment of this claim, or the payment thereof, the same as I might or could do in person were I present and acting for myself, and to file any additional evidence or papers that may be required in the prosecution of this claim.

[Witness.]

Jas. H. Wallace
Louisville

Two witnesses to owner's signature sign here.

The owner signs here. Joseph E. Powers

[redacted]

STATE OF KENTUCKY,
County of Oldham } ss.

I, E. C. Smith, a J. P. & C. in and for said County and State, duly commissioned and sworn, and authorized to administer oaths and take acknowledgments, hereby certify that on this day personally appeared before me Joseph E. Powers known to me to be the person who represents himself to be, and a loyal citizen and resident of said County and State, worthy of full faith and credit; and, after hearing the foregoing paper read, and understanding the meaning and purport of the same, subscribed and swore to the same, and acknowledged the power of attorney and deed of manumission therein to be his act and deed. I further certify that I have no interest, direct or indirect, in the prosecution of this claim.

Witness my hand and seal, this 22nd day of December, 1866.

The officer swearing the owner signs here. E. C. Smith J. P. & C. {L. S.}

PROOF OF OWNERSHIP.

[FORM 2.]

STATE OF KENTUCKY,
County of Oldham } ss.

We, John O. Matthews and James Vincent, each of lawful age, and loyal citizens of said County and State, upon our oaths declare that we are, and have been for 15 years, personally acquainted with Joseph E. Powers, and know that on the 29 day of March 1864, he was a loyal citizen of said County and State, and then and there as stated by him the owner of and entitled to the services of a slave, named Silas Taylor, referred to and described as a private in Company E, of the 12th Regiment United States Colored Troops, in the foregoing claim for compensation; that the ownership of said Joseph E. Powers to said slave is not based upon any transfer made subsequent to said date, when said slave is alleged to have entered into the military service of the United States, but that said claimant's title to said slave was valid at the date of and previous to said enlistment, as stated in his own preceeding affidavit.

Two witnesses to ownership sign here. John O. Matthews
James Vincent

STATE OF KENTUCKY,
County of Oldham } ss.

I, E. C. Smith, a J. P. & C. in and for said County and State, duly commissioned and sworn, and authorized to administer oaths, do hereby certify that on this day personally appeared before me the above named John Matthews and James Vincent known to me to be the persons they represent themselves to be, and loyal citizens of said County and State, worthy of full faith and credit, and after hearing the foregoing statements read, and understanding the same, severally subscribed and swore to the same. I further certify that I have no interest, direct or indirect, in the prosecution of this claim.

Witness my hand and seal this 22 day of December, 1864.

The officer swearing the witnesses signs here. E. C. Smith J. P. & C. {L. S.}

PROOF OF LOYALTY.

[FORM 3.]

STATE OF KENTUCKY,
County of Oldham } ss.

We, James Vincent and R. L. Carpenter, each of lawful age, and loyal citizens of said County and State, upon our oaths declare that we are, and have been for ..... years, acquainted with Joseph E. Powers, of said County and State, who is the applicant in the foregoing claim for compensation for a slave named Silas Taylor, described as a private in Company E., of the 12th Regiment of United States Colored Troops; that we have well known said Joseph E. Powers since the 4th day of March, 1861, and know that he has firmly and faithfully maintained his adherence and allegiance to the Government of the United States, by defending its cause against the Government of the so-called Confederate States of America, in all suitable and practicable ways, according to his ability and opportunity; that on the 29 day of March, 1864, when said slave is alleged to have entered the military service of the United States, the said Joseph E. Powers was a loyal citizen and resident of said County and State, and that he has been loyal ever since.

Two witnesses to loyalty sign here. James Vincent
R. L. Carpenter

STATE OF KENTUCKY,

County of Oldham } ss.

I, L. C. Smith, a Clerk in and for said County and State, duly commissioned and sworn, and authorized to administer oaths, do hereby certify that on this day personally appeared before me the above named Henry Vincent and R. L. Carpenter, known to me to be the persons they represent themselves to be, and loyal citizens of said County and State, worthy of full faith and credit, and after hearing the foregoing statement read, and understanding the same, severally subscribed and swore to the same. I further certify that I have no interest, direct or indirect, in the prosecution of this claim. Witness my hand and seal this 12 day of December, 1864.

The officer swearing the witnesses signs here. L. C. Smith, Clk { L. S. }

STATE OF KENTUCKY,

County of Oldham } ss.

I John T. Rodman Clerk of the County Court, in and for said County and State, and keeper of its records and seal, do hereby certify that D. C. Smith, whose signature and certificate appears to the foregoing oaths, statements and acknowledgments, was at the date thereof an acting Justice of the Peace within and for said County, duly commissioned and sworn; that his official acts as such are entitled to full faith and credit, and that his signature thereto is genuine. I further certify that said Joseph B. Cossens and his witness James Vincent and R. L. Carpenter & John A. Matthews and D. C. Smith whose names are subscribed to the foregoing statement are loyal citizens of said County and State, and worthy of full faith and credit, and were so during the war.

In witness whereof, I have hereunto set my hand and affixed the seal of said County, at my office, in Lagrange this 24 day of December, 1864.

{ L. S. }

The County Clerk signs here and affixes the County Seal. John T. Rodman Clk Oldham County Court

Certificate of Award of the Board of Claims.

OFFICE OF THE BOARD OF CLAIMS,
FOR SLAVES ENLISTED OR DRAFTED IN THE SERVICE OF THE U. S.

....., 186.....

WE HEREBY CERTIFY, that....., of.....County, State of .....having proved, under oath.....loyalty to the Constitution and Government of the United States, and established.....title as to the ownership of..... a slave,.....and mustered at.....on the.....day of ....., 186....., by.....in the service of the United States, in the.....Regiment of Colored Troops, Company....., the sum of ..... dollars has been awarded to.....by this Board, subject to the approval of the Secretary of War, as a compensation for the said slave, under the provisions of Section 24, Act approved February 24, 1864, and Section 2, Act approved July 28, 1866.

....., President of the Board.

....., Member of Board.

....., Member of Board.

To.....

Chief of the Bureau for the organization of Colored Troops, Washington, D. C.

2032

Taylor. William

Co. M., 13 U.S.Col'd H. Art'y.

Private	Private

CARD NUMBERS.

1	55 18849	26	
2	55 19137	27	
3	55 25652	28	
4	55 25801	29	
5	55 25930	30	
6	91 29662	31	
7		32	
8		33	
9		34	
10		35	
11		36	
12		37	
13		38	
14		39	
15		40	
16		41	
17		42	
18		43	
19		44	
20		45	
21		46	
22		47	
23		48	
24		49	
25		50	

Book Mark:

See also Co A 72 U.S.C.T. Inf.

R.P. 6582S7

L-2070195 and 2[illegible]

S-2093567 and N.D. etc

S-2094276, and N.D. in 1 & C.

D2119697 Pomona

J. P. Knowles & Co

E 1/3 Ky **U.S.C.T.**

William Taylor

....., Co. M, 1st Reg't U.S. Col'd Ky Cav

Appears on

Company Descriptive Book

of the organization named above.

DESCRIPTION.

Age 20 years; height 5 feet 6½ inches.

Complexion Dk

Eyes Dk; hair Dk

Where born Boone Co. Ky

Occupation Farmer

ENLISTMENT.

When Oct 15, 1864

Where Covington Ky

By whom Lt Gillespie; term 3 y'rs.

Remarks:

E H Titcomb

(383*g*) **Copyist.**

J | 13 H. Art'y. | U.S.C.T.

William Taylor

Pvt, Co. M, 13 Reg't U. S. Col'd H. Art'y.

Age ..... years.

Appears on

Company Muster Roll*

for June 23 to 30, 1865.

Joined for duty and enrolled:

When Oct 18, 1864.

Where Covington Ky

Period 3 years

Mustered in:

When Oct 18, 1864.

Where Covington Ky

Present or absent Present

Stoppage, $ 100 for .....

Due Gov't, $ 100 for .....

Valuation of horse, $ 100

Valuation of horse equipments, $ 100

Remarks: Due US for Hrs & Eq 65 25

* First current roll. No muster-in roll of this company on file.

Book mark: .....

(3586)

Copyist.

T | 13 H. Art'y. | U.S.C.T.

William Taylor

Pvt., Co. M, 13 Reg't U. S. Col'd H. Art'y.

Appears on

M. and D. Roll of Men Transferred

to the organization named above,

from Co A 72 N 1 Col Inf

Roll dated July 3, 186 3.

When enlisted Oct 18, 186 3

Period for which enlisted 3 years.

When mustered in Oct 18, 186 3

Present or absent not stated

Company to which assigned

Remarks: Credited to 7th D Ky

Book mark: R 235 4 Ky

J Henderson

(342) *Copyist.*

I | **13** H. Art'y. | **U.S.C.T.**

William Taylor

Pvt., Co....., 13 Reg't U. S. Col'd H. Art'y.

Appears on

M. and D. Roll of Men Transferred

to the organization named above,

from 12 N.S.-C.I

Roll dated July 3, 1865.

When enlisted Oct 18, 1864.

Period for which enlisted 3 years.

When mustered in Oct 18, 1864.

Present or absent Not stated

Company to which assigned M

Remarks:

1 Dist Ky

Book mark :

(342) J Underwood

Copyist.

J | 13 H. Art'y. | U.S.C.T.

William Taylor

Pvt, Co. M, 13 Reg't U. S. Col'd H. Art'y.

Appears on

Company Muster Roll

for July & Aug, 1865.

Present or absent Present

Stoppage, $ 65/100 for Cr & E lost

Due Gov't, $ 100 for

Valuation of horse, $ 100

Valuation of horse equipments. $ 100

Remarks:

NEXT ROLL ON FILE MUSTER OUT.

Book mark:

Abbott

Copyist.

(358)

J | **13 H. Art'y.** | **U.S.C.T.**

William Taylor

Pvt, Co. M, 13 Reg't U. S. Col'd H. Art'y.

Appears on **Co. Muster-out Roll,** dated Louisville Ky, Nov 18, 1865.

Muster-out to date Nov 18, 1865.

Last paid to June 30, 1865.

Clothing account:

Last settled ....., 186 ; drawn since $ 100

Due soldier $ ..... 100; due U. S. $ 25 90/100.

Am't for cloth'g in kind or money adv'd $ 100

Due U. S. for arms, equipments, &c., $ 100

Bounty paid $ 100 00/100; due $ 100

Remarks: .....

Book mark: P 2354 VC

Olson

(361) *Copyist.*

Taylor Wm

P, Co. M, 13 Reg't U.S.C.H.A.

1 Enclosures.

Bed Cards	Descriptive Lists
Burial Records	Final Statements
Certs. of Dis. for Discharge	Furloughs
C. M. Charges	Med. Des. Lists
Med. Certificates	Orders

Other papers relating to—

Admission to Hosp'l	Furlough
Casualty Sheet (Officer's)	Med. Examination
Confinement	Misc. Information
Contracts	Pay or Clothing
Death or Effects	Personal Reports
Desertions	Rank
Discharge from Hosp'l	Transfer to Hosp'l
Discharge from Service	Transfer to V. R. C.
Duty	Transportation

MICROFILM PUBLICATION M 1834

COMPILED MILITARY SERVICE RECORDS
OF VOLUNTEER UNION SOLDIERS WHO SERVED WITH
THE UNITED STATES COLORED TROOPS (USCT)
13TH REGIMENT OF HEAVY ARTILLERY

PERSONAL PAPERS' TARGET SHEET

PLEASE NOTE THE CHECKED INFORMATION ABOUT THE PERSONAL PAPERS IN THIS FILE:

☐ NO PERSONAL PAPERS WERE FOUND IN THIS FILE WHEN THE RECORDS WERE ARRANGED FOR MICROFILMING.

☒ 3 PERSONAL PAPER(S) FOUND IN THIS FILE WHEN THE RECORDS WERE ARRANGED FOR MICROFILMING.

ENDORSEMENT.

No. ----------

Application of

[illegible]

of [illegible]

for compensation for service of Slave

[illegible]

enlisted 186

in [illegible] *Co.* [illegible], [illegible] *Regiment,*

U. S. Colored Troops.

Received, [illegible] 186

compensation awarded

186

Dollars.

President Board of Claims.

P. O. Address of Applicant:

[illegible]

Attorney for Claimant.

War Department,

ADJUTANT GENERAL'S OFFICE,

Washington, April 12th 1867.

R. 2354. Ky.

Respectfully returned to the Commission for the State of Kentucky, with the information that William Taylor was enlisted at Covington Ky. Oct. 18. 1864. and was mustered in as Private Co. "M," 13th U. S. Col'd Heavy Art'y Oct 18. 1864,

F. C. Hazard

Asst. Adj't General.

W.R.D.

Headquarters Kentucky Volunteers,

Adjutant-General's Office,

Frankfort, November 6th, 1864.

I hereby certify, that it appears from the U. S. Muster-In Rolls on file in this Office, that William Taylor was enrolled on the 18th day of October, 1864, at Covington Ky, by Maj H. A. Critchell, and mustered into the U. S. service on the 18th day of October, 1864, at Covington Ky, by Maj H. A. Critchell, to serve three years. Said William Taylor is described as follows: 20 years age, Black eyes, Black hair, Black complexion, 5 ft 6½ in height. It further appears from said Rolls, that William Taylor was credited to Bourbon County Ky and own3 service to Jackson Rankin and was assigned to Company "M" 13th Regt U. S. C. Artillery (Heavy)

In Testimony Whereof, I have hereunto set my hand, and affixed my Official Seal, this 6th day of November, 1864.

D. W. Lindsey

Adjutant General of Kentucky.

B — R 450

PROOF OF OWNERSHIP.

STATE OF KENTUCKY,
COUNTY OF Bourbon } ss.

ON THIS 13th day of November 1866, personally appeared before me, the undersigned, in and for the County and State aforesaid, Edwin H. Rankins, a citizen of Paris, County and State aforesaid, and Mason C Arnold a citizen of, Paris, County and State aforesaid, both of whom I certify to be respectable and worthy of credit, and after being duly sworn according to law, on oath state that they have examined the claim of Cassandra M Rankins for pay for William Taylor a slave Mustered into the service of the U. S., that they are and have been for Six years personally acquainted with Cassandra M Rankins, the applicant. That the said William Taylor slave belonged to and was the legal property of Cassandra M Rankins, the said claimant, and was so at the alleged time of enlistment in Company "M." 13th Regt. U.S.C. Artillery (Heavy)

Edwin H. Rankins
Mason C Arnold

Sworn to and subscribed before me, this 13th day of November 1866.

J M Hughes Clk
Bourbon County Court

State of Kentucky,
County of Bourbon } ss.

I, Edwin H Rankins, a citizen of Paris County and State aforesaid, and I, Mason C Arnold, citizen of Paris, County and State aforesaid, state that we have known Cassandra M Rankins for Six years, that she is a resident of Bourbon, County and State aforesaid, and that he (or she) has firmly and faithfully maintained his (or her) adherence and allegiance to the government of the United States, by defending its cause against the government and forces of the so-called Confederate States of America, in all suitable and practicable ways according to his or her ability and opportunity.

Edwin H. Rankins
Mason C Arnold

Sworn to and subscribed before me, this 13th day of November 1866.

J M Hughes Clk
Bourbon County Court

NOTE.—If the affidavit is made before a magistrate, the official character of the magistrate must be authenticated by the proper clerk. If the claimant has a bill of sale from a previous owner, it must accompany the application.

Claim for Compensation for Slave.

No.

I,

a loyal citizen and a resident of County of Bourbon State of Kentucky hereby claim Compensation under the provisions of Section 24, Act approved February 24, 1864, and Section 2, Act approved July 28, 1866, for my Slave William Taylor enlisted 18th of October 1864, at Covington Ky by Maj H. H. Mitchell in the 13th Regiment United States Colored Troops, Company Artillery (Heavy) M, certificate of which enlistment and descriptive roll,

as required, accompany this application. In proof of my loyalty to the Constitution and Government of the United States, I present the accompanying Oath, which I have taken, signed and acknowledged; to be filed with this application, in accordance with requirements of General Orders No. 329, 1863, War Department, Adjutant General's Office.

Cassandra M Rankins

186

OATH OF ALLEGIANCE.

I, the owner and claimant, do solemnly swear the foregoing claim is a just and true claim due to me as

and that the facts alleged in said claim in respect to the of said Slave into the military service of the United States are true. And I do further swear that I have never joined, *or been concerned in, any insurrection* or rebellion; *that I have never borne arms* against the United States; *that I have never given any aid, countenance, counsel or encouragement*, to any person or persons engaged, or whom I had reason to believe were about to engage, in insurrection, rebellion, or armed hostility *against* the United States; that I have never sought nor accepted, nor attempted to exercise the functions of any office, civil or military, nor to perform any service whatever under any authority or pretended authority in hostility to the United States; that I have not yielded a voluntary support to any insurrection, rebellion or pretended government, authority, power or constitution within the United States, hostile thereto. And I do further swear that to the best of my knowledge and ability, I have supported and defended and will continue to support and defend the United States, *against all enemies, foreign and domestic; and that I have supported, defended and obeyed, and will continue to support, defend and obey, the Constitution and Laws of the United States;* that I will bear true faith and allegiance to the same; and that I take this Oath freely, without any mental reservation or purpose of evasion: So help me God.

Cassandra M Rankins

Sworn to and subscribed before me at Paris Ky this 18th day of February 1867

M McKinster
Notary Public

2033

Taylor Zach

Co L, 13 U.S.Col'd H.Art'y.

Private	Private

CARD NUMBERS.

1	55 1938 1	26	
2	55 1934	27	
3	55 2522 1	28	
4	55 2536 9	29	
5	55 2549 4	30	
6	91 29 536	31	
7		32	
8		33	
9		34	
10		35	
11		36	
12		37	
13		38	
14		39	
15		40	
16		41	
17		42	
18		43	
19		44	
20		45	
21		46	
22		47	
23		48	
24		49	
25		50	

Book Mark:

See also Co K. 72 USCT Inf

14 | 13 H. Art'y. | U.S.C.T.

Luck Taylor

....., Co. K, 13 Reg't U. S. Col'd H. Art'y.

Appears on

Company Descriptive Book

of the organization named above.

DESCRIPTION.

Age 18 years; height 5 feet 5 inches.

Complexion Blk

Eyes Blk ; hair Blk

Where born Ky

Occupation Farmer

ENLISTMENT.

When Feb 16, 1865.

Where Louisville Ky

By whom Capt Konnack; term 3 y'rs.

Remarks: Substitute

E. E. Hitchcock

(383g) **Copyist.**

D | 13 H. Art'y. | U.S.C.T.

Jack Taylor

Pvt., Co. L, 13 Reg't U. S. Col'd H. Art'y.

Appears on

M. and D. Roll of Men Transferred

to the organization named above,

from Co C 72 U S C Inf

Roll dated Camp Nelson Ky July 3, 1865.

When enlisted ....., 186 .

Period for which enlisted ..... 3 ..... years.

When mustered in ..... Feb 10, 1865.

Present or absent ..... not stated

Company to which assigned .....

Remarks: Sick for J. Stikenberg

1 Dist Ky

Book mark : .....

S. Merchant

(342) *Copyist.*

13 H. Art'y. | U.S.C.T.

Jack Taylor

Pvt, Co....., 13 Reg't U. S. Col'd H. Art'y.

Appears on

M. and D. Roll of Men Transferred

to the organization named above,

from 12 M.S.C.T.

Roll dated July 3, 1865.

When enlisted ....., 186 .

Period for which enlisted 3 years.

When mustered in Feb 10, 1865.

Present or absent Not Stated

Company to which assigned L

Remarks:

5 Dist Ky

Sub. for J. A. Stickan

bury

//

* As appears on Roll.

Book mark :

J Hudemann

(342) *Copyist.*

13 H. Art'y. | U.S.C.T.

Jack Taylor

Pvt, Co. L, 13 Reg't U. S. Col'd H. Art'y.

Age ..... years.

Appears on

Company Muster Roll*

for To June 30, 1865.

Joined for duty and enrolled:

When ....., 186 .

Where .....

Period 3 years

Mustered in:

When Jan 10, 1865.

Where Louisville Ky

Present or absent Present

Stoppage, $ 100 for .....

Due Gov't, $ 100 for .....

Valuation of horse, $ 100

Valuation of horse equipments, $ 100

Remarks: Stop $1.45 Ordnance lost. Substitute

* First current roll. No muster-in roll of this company on file.

Book mark: .....

Leger

(3586) Copyist.

I | 13 H. Art'y. | U.S.C.T.

Jack Taylor

Pvt., Co. L, 13 Reg't U. S. Col'd H. Art'y.

Appears on

Company Muster Roll

for July & Aug, 1865.

Present or absent Present

Stoppage, $ 100 for

Due Gov't, $ 100 for

Valuation of horse, $ 100

Valuation of horse equipments, $ 100

Remarks: Took $1.45 Ordnance
Lost

NEXT ROLL ON FILE MUSTER OUT.

Book mark:

(358) Copyist.

I | 13 H. Art'y. | U.S.C.T.

Jacob Sanglar

Pvt., Co. L, 13 Reg't U. S. Col'd H. Art'y.

Appears on **Co. Muster-out Roll,** dated Louisville Ky, May 15, 1865.

Muster-out to date June 8, 1865.

Last paid to June 30, 1865.

Clothing account:

Last settled ....., 186 ; drawn since $ 100

Due soldier $ ..... 100; due U. S. $ 100

Am't for cloth'g in kind or money adv'd $ 61 46/100

Due U. S. for arms, equipments, &c., $ 100

Bounty paid $ ..... 100; due $ 100

Remarks: .....

Book mark: .....

Copyist

(361) *Copyist.*

2034.

Taylor Zachariah

Co E, 13 U.S.Col'd H. Art'y.

Private	Private

CARD NUMBERS.

1	5-5-1 6 0 9 2	26	
2	5-5-1 6 2 8 1	27	
3	5-5-1 7 0 6 3	28	
4	5-5-2 3 1 5-4	29	
5	5-5-2 3 3 1 1	30	
6	5-5-2 3 3 5 6	31	
7	9 1 2 8 9 11	32	
8		33	
9		34	
10		35	
11		36	
12		37	
13		38	
14		39	
15		40	
16		41	
17		42	
18		43	
19		44	
20		45	
21		46	
22		47	
23		48	
24		49	
25		50	

Book Mark: 447 to T. 1885

See also

I | 13 H. Art'y. | U.S.C.T.

Zachariah Taylor,

Appears with rank of Pvt on

Muster and Descriptive Roll of a Detachment of U. S. Vols. forwarded

for the 13 Reg't U. S. Col'd H. Art'y. Roll dated

Quincy Ill, Mch 31, 1865.

Where born Mo

Age 18 y'rs; occupation Laborer

When enlisted Mch 29, 1865.

Where enlisted Quincy Ill

For what period enlisted 1 years.

Eyes Blk; hair Blk

Complexion Blk; height 5 ft. 4 in.

When mustered in Mch 31, 1865

Where mustered in Quincy Ill

Bounty paid $ 33 $\frac{00}{100}$; due $ $\frac{00}{100}$

Where credited 2nd Wd Quincy Adams Co Ill 4 Dist. 1

Company to which assigned

Remarks: Entitled to Bounty.

Book mark:

Rose

(339) Copyist.

I | 13 H. Art'y. | U.S.C.T.

Zachariah Taylor

Appears with rank of Priv. on

Muster and Descriptive Roll of a Detachment of U. S. Vols. forwarded

for the 13 Reg't U. S. Col'd H. Art'y. Roll dated

Camp Butler, Ill., Apr. 28, 1865.

Where born Missouri

Age 18 y'rs; occupation laborer

When enlisted Mar. 29, 1865.

Where enlisted Quincy

For what period enlisted 1 years.

Eyes black; hair black

Complexion black; height 5 ft. 4 in.

When mustered in Mar. 31, 1865.

Where mustered in Quincy

Bounty paid $ 33 1/3 100; due $ 100

Where credited Quincy Ill., Adams Co., Ill., Dist. 4.

Company to which assigned

Remarks:

Book mark:

Humphries

(339) Copyist.

I 13th Reg. Artly U.S.V.A.

Zachriah Taylor

Appears with rank of Pvt on

Muster and Descriptive Roll of a Detachment of U. S. Vols. ~~forwarded~~ organized

for the 13 Reg't U.S. Vol'd Artly Roll dated

Camp Nelson, Ky June 23, 1863.

Where born Missouri

Age 18 y'rs; occupation Laborer

When enlisted Mar 28, 1863.

Where enlisted Quincy, Ill.

For what period enlisted 1 years.

Eyes Blk; hair Black,

Complexion Dk; height 5 ft 4 in.

When mustered in Mar 31, 1863.

Where mustered in Quincy

Bounty paid $ 33 1/3 100; due $ 100

Where credited 4th Dist. Ill.

Company to which assigned D.

Remarks:

Book mark:

E H Taylor

(339) *Copyist.*

I | 13 H. Art'y. | U.S.C.T.

Zachariah Taylor

Pvt., Co. A, 13 Reg't U. S. Col'd H. Art'y.

Age ..... years.

Appears on

Company Muster Roll*

for ..... to June 30 1865.

Joined for duty and enrolled:

When ..... Mch 29, 1865.

Where ..... Quincy Ill.

Period ..... 1 years

Mustered in:

When ..... Mch 31, 1865.

Where ..... Quincy Ill.

Present or absent ..... Present

Stoppage, $ ..... 100 for .....

Due Gov't, $ ..... 100 for .....

Valuation of horse, $ 100

Valuation of horse equipments, $ 100

Remarks: .....

NEXT ROLL ON FILE MUSTER OUT.

* First current roll. No muster-in roll of this company on file.

Book mark: .....

Linden

13588 Copyist.

J | 13 H. Art'y. | U.S.C.T.

X Zachariah Taylor

Pvt, Co D, 13 Reg't U. S. Col'd H. Art'y.

Appears on **Co. Muster-out Roll,** dated Louisville Ky. Nov 1st 1865.

Muster-out to date ....., 186 .

Last paid to June 30, 1865.

Clothing account:

Last settled....., 186 ; drawn since $.....100

Due soldier $.....100; due U. S. $ 16 82/100

Am't for cloth'g in kind or money adv'd $.....100

Due U. S. for arms, equipments, &c., $.....100

Bounty paid $ 33 33/100; due $ 33 33/100

Remarks: Due the U S for 1/2 Shelter Tent #4.10 for one Cone 6 cts. Died Nov 16/65 since Completion of roll "

X Entry except Remarks Cancelled by line

Book mark:

Landon

(361) *Copyist.*

I 13th Ky U. S. C. T.

Zachariah Taylor

Pvt. Co. A, 13 Reg't U. S. Col'd 13th Ky

Appears on **Co. Muster-out Roll,** dated

Louisville Ky. Nov 16 1865.

Muster-out to date ....., 186 .

Last paid to June 30 1865.

Clothing account:

Last settled ....., 186 ; drawn since $.....100

Due soldier $.....100; due U. S. $.....100

Am't for cloth'g in kind or money adv'd $.....100

Due U. S. for arms, equipments, &c., $.....100

Bounty paid $.....100 due $.....100

Remarks: Died at Louisville Ky. Nov 16/65

Book mark: 417 C. T. 1865

Louden

(361) *Copyist.*

G | 13 H. Art'y. | U.S.C.T.

Zachariah Taylor

....., Co. F, 13 Reg't U.S. Col'd H. Art'y.

Appears on

Company Descriptive Book

of the organization named above.

DESCRIPTION.

Age 18 years; height 5 feet 4 inches.

Complexion Blk

Eyes Blk; hair Blk

Where born Missouri

Occupation Laborer

ENLISTMENT.

When Mar 29, 1863.

Where Quincy, Ill.

By whom Capt Asberry; term 1 y'rs.

Remarks:

Wm Beck

(383*g*) *Copyist.*

Taylor. Zachariah

C. J. 13 U.S.C.H.A.

, Co. , Reg't

9 Enclosures.

Bed Cards	Descriptive Lists
Burial Records	Final Statements
Certs. of Dis. for Discharge	Furloughs
C. M. Charges	Med. Des. Lists
Med. Certificates 2 Enlistments	Orders

Other papers relating to—

Admission to Hosp'l 1	Furlough
Casualty Sheet (~~Officer's~~) 1	Med. Examination
Confinement	Misc. Information 5
Contracts	Pay or Clothing
Death or Effects	Personal Reports
Desertions	Rank
Discharge from Hosp'l	Transfer to Hosp'l
Discharge from Service	Transfer to V. R. C.
Duty	Transportation

DECLARATION OF RECRUIT.

I, Zachariah Taylor, desiring

VOLUNTEER as a Soldier in the Army of the United States, for the term of ~~THREE YEARS~~ one,

Do Declare, That I am Eighteen years and ____ months

of age; that I have never been discharged from the United States service on account of disability or by sentence of a court martial, or by order before the expiration of a term of enlistment; and I know of no impediment to my serving honestly and faithfully as a soldier for ~~three years~~ one.

GIVEN at Quincy Illinois

the 29 day of March 1865

Witness:

J Coolidge

Zachariah Taylor

made

No. 296

Zachariah Taylor

Volunteered at Quincy Ill

March 29th, 1865

By Capt. Kleeny

To Serve Regiment of Artillery

---

enlistment; last served in Company ( )

Reg't of ____

Discharged ____

By 13th U.S. Regt Artillery, Colonel

Received from ____ Jan. 15, 1866

NOTE 1.—This blank will be used for both enlistments and re-enlistments—enlistment of veterans, &c., in the volunteer service. They will be made out in duplicate in all cases—one to accompany the recruiting return of the superintendent (not the recruiting officer) to the Adjutant General, and one to accompany the accounts of the officer who pays bounty, &c. The Regiment and Company in which the soldier last served should be given on the back.

NOTE 2.—An enlistment holds to service. A muster-in must, in all cases, precede payment of pay, bounty, pension, &c. A muster-in roll must, in all cases, be filed in the Adjutant General's Office as evidence of muster-in. The mustering officer, commissary, or assistant commissary of musters, as the case may be, will countersign both enlistments as having mustered the soldier into the service of the United States before either of them is given to the disbursing officer.

CONSENT IN CASE OF MINOR.

I, _____, DO CERTIFY, That I am

the _____ of _____; that the

said _____ is _____ years of age; and I

do hereby freely give my CONSENT to his volunteering as a SOLDIER in the ARMY OF THE UNITED STATES for the period of THREE YEARS.

GIVEN at _____

the _____ day of _____

Witness:

_____

_____

(A. G. O. No. 74 & 76.)

VOLUNTEER ENLISTMENT.

STATE OF Illinois TOWN OF Quincy

I, Zachariah Taylor, born in _____,
in the State of Missouri, aged 18 years,
and by occupation a Laborer, DO HEREBY ACKNOWLEDGE to have
volunteered this twenty ninth day of March, 1865,
to serve as a ***Soldier*** in the **Army of the United States of America,** for
the period of THREE YEARS, unless sooner discharged by proper authority:
Do also agree to accept such bounty, pay, rations, and clothing, as are, or may be,
established by law for volunteers. And I, Zachariah Taylor, do
solemnly swear, that I will bear true faith and allegiance to the ***United States of America,*** and that I will serve them honestly and faithfully against all their
enemies or opposers whomsoever; and that I will observe and obey the orders of
the President of the United States, and the orders of the officers appointed over
me, according to the Rules and Articles of War.

Sworn and subscribed to, at Quincy Ills this 29th day of March, 1865, before Capt & Pro Mar 4th Dist Ills

Zachariah Taylor his mark

I CERTIFY, ON HONOR, That I have carefully examined the above-named Volunteer, agreeably to the General Regulations of the Army, and that, in my opinion, he is free from all bodily defects and mental infirmity, which would in any way disqualify him from performing the duties of a soldier.

Mo. F. Bassett
EXAMINING SURGEON.

I CERTIFY, ON HONOR, That I have minutely inspected the Volunteer Z. Taylor previously to his enlistment, and that he was entirely sober when enlisted; that, to the best of my judgment and belief, he is of lawful age; and that, in accepting him as duly qualified to perform the duties of an able-bodied soldier, I have strictly observed the Regulations which govern the recruiting service. This soldier has Black eyes, Black hair, Black complexion, is 5 feet 4 inches high.

Capt & Pro Mar 4th Dist Ills
Regiment of _____ Volunteers,
RECRUITING OFFICER.

(A. G. O. No. 74 & 76.)

Quincy Club "No 23."

Certificate for the Signature of the Mustering Officer, Commissary, or Assistant Commissary of Musters, as the case may be.

Mustered into the service of the United States, for ~~three~~ one years or during the war, from date of enlistment, in Co. ____, Regiment of Illinois Volunteers, on the 29 day of March, 1865, at Quincy Ills,
and credited to ____ Ward, (or Sub-district,) in the Town of ____,
____th Congressional District, in the State of ____, in the County of ____.

Bounty paid at time of Muster-in: $ 300.00

U. S. Bounty, ____

Local Bounty, ____

Capt & Pro Mar 4th Dist Ills

DECLARATION OF RECRUIT.

I, Zachariah Taylor, desiring

VOLUNTEER as a Soldier in the Army of the United States, for the term of ~~THREE~~ one YEAR, Do Declare, That I am Eighteen years and — months of age; that I have never been discharged from the United States service on account of disability or by sentence of a court martial, or by order before the expiration of a term of enlistment; and I know of no impediment to my serving honestly and faithfully as a soldier for ~~three~~ one years.

GIVEN at Quincy Illinois

the 29 day of March 1864

Witness: J. Eldridge Zachariah his Taylor mark

No. 2986

Zachariah Taylor

Volunteered at Quincy Ill

Aug 5 1864

To serve Two years

By Capt Bunn Quincy Illinois

Regiment of Artillery

enlistment; last served in Company ( )

Reg't of

Discharged

Mar 13th 1865 Heavy

Artillery (Colored)

, 18 .

NOTE 1.—This blank will be used for both enlistments and re-enlistments—enlistments of veterans, &c., &c., in the volunteer service. They will be made out in duplicate in all cases—one to accompany the recruiting return of the superintendent (not the recruiting officer) to the Adjutant General, and one to accompany the accounts of the officer who pays bounty, &c. The Regiment and Company in which the soldier last served should be given on the back.

NOTE 2.—An enlistment holds to service. A muster-in must, in all cases, precede payment of pay, bounty, pension, &c. A muster-in roll must, in all cases, be filed in the Adjutant General's Office as evidence of muster-in. The mustering officer, commissary, or assistant commissary of musters, as the case may be, will countersign both enlistments as having mustered the soldier into the service of the United States before either of them is given to the disbursing officer.

CONSENT IN CASE OF MINOR.

I, ..., DO CERTIFY, That I am the ..... of .....; that the said ..... is ..... years of age; and I do hereby freely give my CONSENT to his volunteering as a SOLDIER in the ARMY OF THE UNITED STATES for the period of THREE YEARS.

GIVEN at .....

the ..... day of .....

Witness:

.....

.....

(A. G. O. No. 74 & 76.)

VOLUNTEER ENLISTMENT.

STATE OF Illinois TOWN OF Quincy

I, Zachariah Taylor, born in ....., in the State of Mississippi, aged Eighteen years, and by occupation a Laborer, Do HEREBY ACKNOWLEDGE to have volunteered this twenty ninth day of March, 1865, to serve as a ***Soldier*** in the **Army of the United States of America,** for the period of ~~FIVE~~ *YEARS*, unless sooner discharged by proper authority: Do also agree to accept such bounty, pay, rations, and clothing, as are, or may be, established by law for volunteers. And I, Zach Taylor, do solemnly swear, that I will bear true faith and allegiance to the ***United States of America,*** and that I will serve them honestly and faithfully against all their enemies or opposers whomsoever; and that I will observe and obey the orders of the President of the United States, and the orders of the officers appointed over me, according to the Rules and Articles of War.

Sworn and subscribed to, at Quincy Ills this 29 day of March, 1865. Zachariah his Taylor mark

BEFORE Capt and Pro Marsh 4th Dist Ill

I CERTIFY, ON HONOR, That I have carefully examined the above-named Volunteer, agreeably to the General Regulations of the Army, and that, in my opinion, he is free from all bodily defects and mental infirmity, which would in any way disqualify him from performing the duties of a soldier.

M. F. Bassett

EXAMINING SURGEON.

I CERTIFY, ON HONOR, That I have minutely inspected the Volunteer Taylor previously to his enlistment, and that he was entirely sober when enlisted; that, to the best of my judgment and belief, he is of lawful age; and that, in accepting him as duly qualified to perform the duties of an able-bodied soldier, I have strictly observed the Regulations which govern the recruiting service. This soldier has Black *eyes,* Black *hair,* Black *complexion,* is 5 *feet* 4 *inches* high.

Capt and Pro Mar 4th Dist Ill *Regiment of* ..... *Volunteers.*

RECRUITING OFFICER.

(A. G. O. No. 74 & 76.)

Certificate for the Signature of the Mustering Officer, Commissary, or Assistant Commissary of Musters, as the case may be.

Mustered into the service of the United States, for ~~Five~~ One years or during the war, from date of enlistment, in Co. Regiment of Illinois Volunteers, on the 29 day of March, 1865, at Quincy, and credited to 2nd Ward, (or Sub-district,) in the Town of Quincy, in the County of Adams, 4th Congressional District, in the State of Illinois.

Bounty paid at time of Muster-in:

U. S. Bounty, $ 300

Local Bounty, $ .....

Capt & Pro Mar 4th Dist Ill

Mustering Officer.

CASUALTY SHEET

No. ~~Co. F 2d Cav.~~

Zachariah Taylor

Pvt of Company D

13 Regiment of Ill. Cav.

State Volunteers

NATURE OF CASUALTY.

Died Apr 16. '65

See 417 - C. J. 1885.

CASUALTY SHEET.

Name: Zachariah Taylor

Rank: Bvt *Company:* "F" *Regiment:* 13th

Arm: U.S. Vol'd Art'y *State:*

Nature of Casualty: Death.

CAUSE OF CASUALTY—(NAME OF DISEASE, &C.)

DEGREE OF DISABILITY.

BY WHOM CERTIFIED.

Charles S. Ware
1st Lt. Com'd Co

DATE OF DISCHARGE, DEATH, &C.

Nov 16. 1865.

PLACE OF DISCHARGE, DEATH, &C.

Louisville, Ky.

BY WHOM DISCHARGED.

FROM WHAT SOURCE THIS INFORMATION WAS OBTAINED.

Co Muster Roll

REMARKS.

Roll of Honor. Vol 19. Page 139. gives date of death as Nov 14. 1865

A. J. Pall
Clerk.

(170)

COPY OF RECORD

FOR THE

ADJUTANT GENERAL U. S. ARMY.

JUL 17 1

Record of Request of Lieutenant
of
Zachariah Taylor
13. August 1808

No. 2.

RECORD OF DEATH AND INTERMENT.

Name and number of person interred.	Zachariah Taylor No. 120.
Number and locality of the grave . .	
Hospital number of the deceased . .	
Regiment, rank, and company . . .	13th U.S.L.A. Det. Co "A"
Residence before enlistment . . .	Quincy Ills
Conjugal condition, (and if married, the residence of the widow) . .	Single
Cause of death	Apoplexy
Age of the deceased	18 yrs.
Nativity	Missouri
References and remarks	
Date of death and burial	Died Nov. 13. Buried Nov. 14th, 1865.

[A duplicate of this Record has been forwarded to the Sexton, and another remains at this Hospital.]

To Col J. T. Foster 13th U.S.L.A.

SIR:

It becomes my duty to inform you that the person above described died at this Hospital as herein stated; and that it is desired his remains should be interred with the usual military honors.

Respectfully,

Wm. Wirt Pipes
Asst Surgeon U. S. Army.

Louisville Ky.
Barracks No. 1. Nov. 14 1865

MILITARY HOSPITAL,

This copy of Record is to be transmitted to the Adjutant General at Washington immediately after the place of burial and the number of the grave have been ascertained and registered. The above notification is to remain attached.

Pension Number.....

R. of.....A., Vol.....No.....

WAR DEPARTMENT,

Surgeon General's Office,

RECORD AND PENSION DIVISION,

Washington, D. C., ..., 186 .

[CERTIFICATE FROM RECORDS.]

It appears, from the records filed in this Office, that .....

.....Co....., ...Reg't.....Vol.....

was admitted to .....Hospital, ...

....., 186...., from .....for treatment for

.....

.....

.....

.....

.....

.....

.....

.....

.....

Remarks: .....

.....

.....

BY ORDER OF THE SURGEON GENERAL:

.....

Brev. Lieut. Col. and Asst. Surgeon, U. S. Army.

(73)

(NOTE. This certificate should not be detached from the accompanying papers.)

H17 C.1. 1885.

February 6th 1885.

Zachariah Taylor,
late Pvt. Co. "F", 13th C.A.

Surg. Gen. returns A.G.O.
Communication, with
report in case of

(1 Enc.) Noted &c.

File.

SURGEON GENERAL'S OFFICE
RECEIVED
DEC 29 1884
U.S. ARMY

WAR DEPARTMENT,

Surgeon General's Office,

Record and Pension Division,

Washington, D. C., Feb. 6 , 1885.

Respectfully returned to the Adjutant General, U. S. Army, with report enclosed.

BY ORDER OF THE SURGEON GENERAL:

D.L.T. Pope

Assistant Surgeon, U. S. A.

(80)

RECEIVED
FEB
10
1885
R. & P. DIVISION

War Department,

ADJUTANT GENERAL'S OFFICE,

Washington, D. C., Dec 27th, 1884.

Sir:

I have the honor to inform you that Zachariah Daylor

Private, Co. H, 13th Reg't U.S. Colored Artillery

Volunteers, is reported on the muster out roll of that Company ~~for the month~~

of Dated Nov 18th, 1865, as follows:

"Died at Louisville Ky Nov 16, 1865."

---

and to request that you furnish this Office with such information relative to this soldier as the records of your office may afford.

Very respectfully,

Your obedient servant,

E. D. Townsend

Assistant Adjutant General.

(253.)

The Surgeon General
U.S. Army.

CMB

417 C.I. 1885.

WAR DEPARTMENT,

Surgeon General's Office,

RECORD AND PENSION DIVISION,

Washington, D. C., Feb. 6th, *1885*

(TRANSCRIPT FROM RECORDS.)

It appears from the records filed in this Office, that Jack Taylor Private Co. F 13 U. S. C. Hy. Art was admitted to Nelson G. H. Camp Nelson. Ky Aug. 4. 1865 with Catarrh and Transfered Aug. 30. 1865, and that he was admitted to Post Hospital Camp Nelson. Ky (date of admission not stated) with Diarhoea and returned to duty Sept 26. 1865. The Death and discharge Records of this Office furnish no evidence in this case.

No medical records of the 13 U. S. C. Hy. Art on file in this Office The Medical Directors Office Louisville Ky (which embrace admissions to hospitals at Louisville) from Aug 1 1865 to Nov. 16. 1865 furnish no information in this case

By order of the Surgeon General:

P. F. Pope

Asst. Surgeon U. S. Army.

(108)

VOL .....

NO 332074 Per

(NOTE.—This transcript should not be detached from the accompanying papers. If additional information is desired relative to the case, the papers should accompany the application therefor.)

Surgeon General's Office,

Record and Pension Division,

Washington, Sept. 16", 1868.

Respectfully returned to the Adjutant General, U. S. Army, with certificate from records filed in this Office enclosed, in case of the soldier described within.

BY ORDER OF THE SURGEON GENERAL:

Bvt. Lt. Col. and Asst. Surgeon, U. S. A.

(69)

R. of A., Vol. 111 No. 1119 1/4 1/54

RECEIVED ADJUTANT GENERAL'S OFFICE
SEP
1868

R. of A.
No. 1419
VOL. 4

WAR DEPARTMENT,

ADJUTANT GENERAL'S OFFICE,

WASHINGTON, August 14, 1863.

SIR:

Final Statements in the cases of deceased soldiers are required to be sent to the Adjutant General's Office in duplicate, with one copy of the Inventory of Effects. The Descriptive List should also be sent to this Office in cases where the soldier was absent from his Company at the time of his death. Where there were no effects, it should be so stated on a blank Inventory, properly signed.

Certificates of Disability should be sent in duplicate. Special care should be taken that the date of discharge and signature of the discharging officer should be affixed.

No ... of the Final Statement ... Inventory, has been received in the case of Zachariah Taylor, Private, of Co. "F", 13" Regiment of Ky. Vol. Infty Volunteers, whose papers were forwarded to this Office. You will please forward the missing papers without delay.

I have the honor to be, sir,

Very respectfully,

Rec'd Nov. 16. '65. Your obedient servant,

Louisville Ky.

Thomas M. Vincent

Assistant Adjutant General.

(110)

Lt. Col. &c.

COMMANDING OFFICER

J. J. Woodward

Asst. Surg. U.S. Army.

Louisville Ky.

1865.

(OFFICE INDORSEMENT.)

War Department,

ADJUTANT GENERAL'S OFFICE,

....., 18 .

The Death of Pvt Zachariah Taylor, Co. F, 13 Reg't U. S. Colored Arty Hvy, is reported as follows:

On Company Muster Roll.

For ....., 186 , ... 186 .

Company Muster-out Roll. dated Nov 18. 1865. - Nov 16 , 1865.

Company Descriptive Book.

No information , 186 .

Company Morning Reports.

Not on file subs. to July 10/65, 186 .

Soldier's Final Statement.

Not on file , 186 .

Soldier's Record of Death and Interment.

Not on file , 186 .

Soldier's Inventory of Effects.

Not on file , 186 .

~~Soldier's Certificate of Disability for Discharge.~~

Q. Clothing Book - Nov 12 , 1865.

~~Soldier's Individual Muster-out Roll.~~

Roll of Honor. - Nov 14 , 1865.

Regimental Return.

For Nov 1865 Not on file, 186 .

Regimental Quarterly Returns.

4th Qr 65 not on file. , 186 .

Regimental Descriptive Book.

No information , 186 .

By Surgeon General.

Sel'd. 16/68) No record , 186 .

Nov 16, 1865, is held to be the correct date, and the Company Muster ..... Roll will be amended accordingly.

.....

Assistant Adjutant General.

2035

Terry. Henry

Co L, 13 U.S. Col'd H. Art'y.

Corporal	Corporals

CARD NUMBERS.

1	55 19260	26	
2	55 19136	27	
3	55 25100	28	
4	55 25249	29	
5	55 25899	30	
6	91295-31	31	
7		32	
8		33	
9		34	
10		35	
11		36	
12		37	
12		38	
14		39	
15		40	
16		41	
17		42	
18		43	
19		44	
20		45	
21		46	
22		47	
23		48	
24		49	
25		50	

Book Mark:

See also Co L. 72 U.S.C.H. Art'y.

1 | 13 H. Art'y. | U.S.C.T.

Ed G Ellis

....., Co. L, 13 Reg't U. S. Col'd H. Art'y.

Appears on

Company Descriptive Book

of the organization named above.

DESCRIPTION.

Age 20 years; height 5 feet 6 inches.

Complexion Dark

Eyes Dark; hair Dark

Where born Fleming Co. Ky

Occupation Farmer

ENLISTMENT.

When Sept 14, 1865.

Where Louisville Ky

By whom Capt Smith, term 5 y'rs.

Remarks:

E. V. Sharpsville

(383*g*) **Copyist.**

V | 13 H. Art'y. | U.S.C.T.

Henry Terry

Corp, Co. L, 13 Reg't U. S. Col'd H. Art'y.

Appears on

M. and D. Roll of Men Transferred

to the organization named above,

from Co C 72 USC Inf

Roll dated Camp Nelson Ky July 3, 1865.

When enlisted Jan 14, 1865.

Period for which enlisted 3 years.

When mustered in Jan 14, 1865.

Present or absent Not stated

Company to which assigned

Remarks: Corp since Feb 18/65

4 Dist Ky

Book mark :

S. Merchant

(342) *Copyist.*

T | **13** H. Art'y. | **U.S.C.T.**

Henry Terry

Corp., Co. L, 13 Reg't U.S. Col'd H. Art'y.

Appears on

M. and D. Roll of Men Transferred

to the organization named above,

from 72 U S C I

Roll dated July 3, 186 5.

When enlisted Jan 14, 186 5.

Period for which enlisted 3 years.

When mustered in Jan 14, 1865.

Present or absent Not stated

Company to which assigned L

Remarks:

4 Dist. Ky

Book mark:

J Hammond

(342) *Copyist.*

I | 13 H. Art'y. | U.S.C.T.

Henry Terry

Corpl, Co. L, 13 Reg't U. S. Col'd H. Art'y.

Age ..... years.

Appears on

Company Muster Roll*

for Ju June 30, 1865.

Joined for duty and enrolled:

When Jan 14, 1865.

Where Louisville Ky

Period 3 years

Mustered in:

When Jan 14, 1865.

Where Louisville Ky

Present or absent Present

Stoppage, $ 100 for .....

Due Gov't, $ 100 for .....

Valuation of horse, $ 100

Valuation of horse equipments, $ 100

Remarks: Apptd Corpl Feb. 18/65.
Stop 65 cts Canteen lost

* First current roll. No muster-in roll of this company on file.

Book mark: .....

Logan

Copyist.

5

13 H. Art'y. | U.S.C.T.

Henry Berry

Corp., Co. L, 13 Reg't U. S. Col'd H. Art'y.

Appears on

Company Muster Roll

for July & Aug, 1865.

Present or absent Present

Stoppage, $ 100 for

Due Gov't, $ 100 for

Valuation of horse, $ 100

Valuation of horse equipments, $ 100

Remarks: Appt Corp Feb 18/65
Mustd 65 " one Canteen
lost.

NEXT ROLL ON FILE MUSTER OUT.

Book mark:

Leger

(358) *Copyist.*

I | 13 H. Art'y. | U.S.C.T.

Henry Terry

Corpl, Co. L, 13 Reg't U. S. Col'd H. Art'y.

Appears on **Co. Muster-out Roll,** dated Louisville Ky., Nov 18, 1865.

Muster-out to date Nov 18, 1865.

Last paid to June 30, 1865.

Clothing account:

Last settled ....., 186 ; drawn since $ 100

Due soldier $ ..... 100; due U. S. $ 100

Am't for cloth'g in kind or money adv'd $ 36 95/100

Due U. S. for arms, equipments, &c., $ 100

Bounty paid $ ..... 100; due $ 100

Remarks: Due U.S. for Ord. 1 Cart box & plate $1.00 03

Aptd Corpl. Feb. 28/65.

Book mark: .....

(361) *Copyist.*

2036

Terry. James P.

Co S, 13 U.S. Col'd H. Art'y.

Private | Private

CARD NUMBERS.

1	5-5-17245-	26	
2	5-5-22364	27	
3	5-5-22578	28	
4	5-5-2253-33	29	
5	91286111	30	
6		31	
7		32	
8		33	
9		34	
10		35	
11		36	
12		37	
13		38	
14		39	
15		40	
16		41	
17		42	
18		43	
19		44	
20		45	
21		46	
22		47	
23		48	
24		49	
25		50	

Book Mark:

See also Leo B 120 4856 Inf

I | 13 Hdy | U.S.C.T.

James S Sunny

....., Co. D, 1st Reg't U. S. Col'd Hdy

Appears on

Company Descriptive Book

of the organization named above.

DESCRIPTION.

Age 20 years; height 5 feet 10 inches.

Complexion Dk

Eyes Dk; hair Dk

Where born Fayette Co Kentucky

Occupation Farmer

ENLISTMENT.

When Jan 8, 1865.

Where Henderson Ky

By whom Lt Col Glenn; term 3 y'rs.

Remarks: Deserted

Deserted

(383y) **Copyist.**

13 H. Art'y. | U.S.C.T.

James B. Henry

Appears with rank of Pvt on

Muster and Descriptive Roll of a Detachment of U. S. Vols. ~~forwarded~~ Organized

for the 13 Reg't U. S. Col'd H. Art'y. Roll dated

Not Dated, ..., 186 .

Where born Fayette Co. Kentucky

Age 22 y'rs; occupation Farmer

When enlisted Jan. 16, 1863.

Where enlisted Henderson, Ky.

For what period enlisted 3 years.

Eyes Blk.; hair Blk.

Complexion Blk.; height 5 ft. 11 in.

When mustered in Jan. 18, 1865.

Where mustered in Louisville, Ky.

Bounty paid $ 100; due $ 100

Where credited 2 Reg. Dist. Ky.

Company to which assigned K

Remarks: Transferred from 120 Regt. U.S.C.I. Co. B.

Book mark:

C. B. Taylor

(339) Copyist.

F 13 U.S.C.T.

Spencer Bivens

Pvt, Co. D, 13 Reg't U. S. Col'd Inf

Appears on

Company Muster Roll

for May & June, 1865.

Present or absent Present

Stoppage, $ 100 for

Due Gov't, $ 100 for

Valuation of horse, $ 100

Valuation of horse equipments, $ 100

Remarks: Has received U.S. Bounty. Joined from Co. "B" 12th Regt U.S.C.I. June 23, 1865 Draws 1st installment Govt Bounty.

FROM SECOND AUDITOR'S ROLL.

NEXT ROLL ON FILE MUSTER OUT.

Book mark:

L e Gear

(358) *Copyist.*

\# 7 | **13 H. Art'y.** | **U.S.C.T.**

Edward B. Terry

Pvt., Co. D, 13 Reg't U. S. Col'd H. Art'y.

Appears on **Co. Muster-out Roll,** dated Louisville Ky., June, 186 5.

Muster-out to date ....., 186 .

Last paid to June 30, 186 5.

Clothing account:

Last settled ....., 186 ; drawn since $ 100

Due soldier $ ....100; due U. S. $ 100

Am't for cloth'g in kind or money adv'd $ 100

Due U. S. for arms, equipments, &c., $ 100

Bounty paid $ ....100; due $ 100

Remarks: Deserted

Erroneously reported a deserter

* Name and entry cancelled, except remark.

Book mark: .....

Roger

(361) *Copyist.*

T | **13** H. Art'y. | **U.S.C.T.**

James B. Terry

Pvt., Co. D, 13 Reg't U. S. Col'd H. Art'y.

Appears on **Co. Muster-out Roll,** dated Louisville Ky., Nov 18, 1865.

Muster-out to date Nov 18, 1865.

Last paid to June 30, 1865.

Clothing account:

Last settled ....., 186 ; drawn since $ 100

Due soldier $ 68 14/100; due U. S. $ 100

Am't for cloth'g in kind or money adv'd $ 100

Due U. S. for arms, equipments, &c., $ 100

Bounty paid $ 100 00/100; due $ 100

Remarks: Erroneously reported as Deserter. Restored to duty without loss of pay or allowances per S.O. No 235 Hd. Qrs. Dept of Ky Nov 20/65 After Completion of Rolls but prior to final muster out

Book mark: Charge of desertion

(361) *Copyist.*

JAN. 16 1951
5522533

removed D.C. 233. D. Ky
Nov. 1965, on file misc
orders 1867. V. 213. P. 217. 74.

Perry. James B.

....., Co. D, 13 Reg't U.S.H.A.

1 **Enclosures.**

Bed Cards	Final Statements
Burial Records	Furloughs or L. of A.
Certs. of Dis. for Discharge	Med. Certificates
C. M. Charges	Med. Des. Lists
Descriptive Lists	Orders
Discharge Certificates	Pris. of War Record
Enlistment Papers	Resignations

Other papers relating to—

Admission to Hosp'l	Furlough or L. of A. 1
Casualty Sheet	Med. Examination
Confinement	Misc. Information 2
Contracts	Pay or Clothing
Death or Effects	Personal Reports
Desertion	Rank
Discharge from Hosp'l	Transfer to Hosp'l
Discharge from Service	Transfer to V. R. C.
Duty	Transportation

Nov. 15. 1865

James B. Terry

D. 13. U. S. C. A. Ky.

see

Geo. Russell

D. 13. U. S. C. A. Ky.

Kentucky.

FURLOUGH.
OR
RESTORATION.

Affidavit

Hospital U. S. N.
Capt. C. & D. 13th U.S.C. Hvy.

Case
Russell Long

Charge Desertion

Louisville Ky
Nov 20th 1865

Sir.

I have the honor to submit to your consideration the following statement in regard to two of the men belonging to Co D. 13th U S Co. A Arty (Hoy)

James B Terry, who had a sick furlough granted from Camp Nelson Ky during which time the regiment moved to Covington Ky. He reported at Camps Nelson at the expiration of his furlough and was sent to Genl. Hosp. by the surgeon in charge, who failed to report the same to the regiment. He has now reported to the company as discharged from the hospital.

On account of not having received any report of his admission into the hospital he has been erroneously reported as a deserter

H C Hopkins
Capt Co D 13th U.S.L.A. H.A.

Subscribed & sworn to before me this 20th day of November 1865

W. Hall
Capt 2nd Inf Ky
Recruiting Co.

Nov. 20. 1865

James B. Terry
D, 13, U. S. C. Art'y. Maj.

Wm Ramsdell Asst
Surgeon U.S.A.

Recorder Nov 20/65

Proceedings of a Medical
Commission in case
of
Asst Surgeon James B.
Terry D. 13th U.S.C.A. Maj

Charges Dismissal

The Commission having
duly considered and
examined the
Depositions
and the Records
and all papers and allega-
tions -

Head Qrs Military Commission
Post Head Qrs
Louisville Ky Nov 20th 1865

Capt Chas A Reed
Asst Adjt Genl
Ottawa

In compliance with Special Order No 187 Dept Ohio Head Qrs convening the Military Commission of which Capt Lt. Col. U.S. C. is President assembled to investigate the charge of alleged desertion against Private James B. [redacted] Co D 13th Ky Vol Cav and

On his Co Muster Out roll he is charged with having deserted the 1st Oct 1865.

The Commission having investigated the case find that he is not a deserter and respectfully submit his case to the Department Commander recommending that he be honorably mustered out of service with all pay and allowances.

Very Respectfully
Asst Adjt
[illegible]

2037

Ferry. Pero

Co. L, 13 U.S. Col'd H. Art'y.

Enate | Enate

CARD NUMBERS.

1	5-5-17241	26	
2	5-5-33176	27	
3	5-5-22361	28	
4	5-5-2255-10	29	
5	91286608	30	
6		31	
7		32	
8		33	
9		34	
10		35	
11		36	
12		37	
13		38	
14		39	
15		40	
16		41	
17		42	
18		43	
19		44	
20		45	
21		46	
22		47	
23		48	
24		49	
25		50	

Book Mark:

See also

D 13 H. Arty | **U.S.C.T.**

Iro, Terry

....., Co. D, 13 Reg't U. S. Col'd H. Arty

Appears on

Company Descriptive Book

of the organization named above.

DESCRIPTION.

Age 40 years; height 5 feet 3 inches.

Complexion Blk

Eyes Blk; hair Blk

Where born Montgomery, Tennessee

Occupation Farmer

ENLISTMENT.

When May 31, 1863.

Where Bowling Green

By whom Capt Holton; term 3 y'rs.

Remarks: .....

Deserted

(383$\frac{1}{2}$) **Copyist.**

I | 13 H. Art'y. | U.S.C.T.

Pero Perry

Appears with rank of Pvt on

Muster and Descriptive Roll of a Detachment of U. S. Vols. ~~forwarded~~ Enlisted

for the 13 Reg't U. S. Col'd H. Art'y. Roll dated

Not Dated, , 186 .

Where born Montgomery Co. Tennessee

Age 40 y'rs; occupation Farmer

When enlisted May 31, 1865.

Where enlisted Barren Green, Ky

For what period enlisted 3 years.

Eyes Blk; hair Blk

Complexion Blk; height 5 ft. 3 in.

When mustered in May 31, 1865.

Where mustered in B. Green, Ky

Bounty paid $ 100; due $ 100

Where credited

Company to which assigned K

Remarks:

Book mark:

B. Taylor

Copyist.

T | 13 H. Art'y. | U.S.C.T.

Pero Terry

Appears with rank of Pvt on

Muster and Descriptive Roll of a Detachment of U. S. Vols. forwarded

for the 13 Reg't U. S. Col'd H. Art'y. Roll dated Bowling Green Ky. May 31, 1865.

Where born Montgomery Co. Tenn.

Age 40 y'rs; occupation Farmer

When enlisted May 31, 1865.

Where enlisted B. Green Ky.

For what period enlisted 1 years.

Eyes Blk; hair Blk

Complexion Blk; height 5 ft. 3 in.

When mustered in ....., 186 .

Where mustered in .....

Bounty paid $ 100; due $ 100

Where credited 3 Cong. Dist. Ky.

Company to which assigned .....

Remarks: New Recruit. Todd Co. Owed Service to Gobrias Terry.

Book mark: .....

Harris

Copyist.

F | 13th | U.S.C.T.

Pvt. Inf'y

2d, Co. D, 13 Reg't U. S. Col'd 4th

Appears on

Company Muster Roll

for May & June, 1865.

Present or absent Present

Stoppage, $ 100 for

Due Gov't, $ 100 for

Valuation of horse, $ 100

Valuation of horse equipments, $ 100

Remarks: Has received no
U.S. Bounty. Due 1st
& 2d Enlistment Govt
Bounty

FROM SECOND AUDITOR'S ROLL.

NEXT ROLL ON FILE MUSTER OUT.

Book mark:

Leger

(358) *Copyist.*

I | **13** H. Art'y. | **U.S.C.T.**

Peter Terry

Pvt., Co. D, 13 Reg't U. S. Col'd H. Art'y.

Appears on **Co. Muster-out Roll,** dated Louisville Ky, Nov 18, 1865.

Muster-out to date Nov 18, 1865.

Last paid to June 30, 1865.

Clothing account:

Last settled ....., 186 ; drawn since $ 100

Due soldier $ 10 15/100; due U. S. $ 100

Am't for cloth'g in kind or money adv'd $ 100

Due U. S. for arms, equipments, &c., $ 100

Bounty paid $ 100 100; due $ 100

Remarks: .....

Book mark: .....

Edgar

(361) *Copyist.*

2038

Next number. 2038-a

Terry. William

Co H, 13 U.S.Col'd H. Art'y.

Private | Private

CARD NUMBERS.

1	55185347	26	
2	55179577	27	
3	55239547	28	
4	552410 6	29	
5	55242557	30	
6	91292225	31	
7		32	
8		33	
9		34	
10		35	
11		36	
12		37	
13		38	
14		39	
15		40	
16		41	
17		42	
18		43	
19		44	
20		45	
21		46	
22		47	
23		48	
24		49	
25		50	

Book Mark:

See also Leo. F. 121. 2 USC Inf

MARK 303

A/3796741 Portman
B/1780433. Psgt

D. Laurent Esqr

J | 13 H. Art'y. | U.S.C.T.

William Ferry

....., Co. A, 13 Reg't U.S. Col'd H. Art'y.

Appears on

Company Descriptive Book

of the organization named above.

DESCRIPTION.

Age 17 years; height 5 feet 5 inches.

Complexion Black

Eyes Blk; hair Blk

Where born not known, Va.

Occupation laborer

ENLISTMENT.

When May 28, 1865.

Where Piketon Ky

By whom Lt G C Clapp; term 3 y'rs.

Remarks:

Beck

(383g) **Copyist.**

J | 13 H. Art'y. | U.S.C.T.

William Terry

Pvt, Co. F, 13 Reg't U. S. Col'd H. Art'y.

Appears on

M. and D. Roll of Men Transferred

to the organization named above,

from Co. F, 121 Reg't U. S. Colored Infantry.

Roll dated Camp Nelson, Ky. June 23, 1865.

When enlisted May 28, 1865.

Period for which enlisted 3 years.

When mustered in June 5, 1865.

Present or absent Not stated

Company to which assigned

Remarks:

Book mark:

Rochester

(342) *Copyist.*

G | 13 H. Art'y. | U.S.C.T.

William Jones

Co. ____, 13 Reg't U. S. Col'd H. Art'y.

Appears on

M. and D. Roll of Men Transferred

to the organization named above,

from Co. ____, 121 Reg't U. S. Colored Infantry.

Roll dated June 23, 1865.

When enlisted May 29, 1865.

Period for which enlisted 3 years.

When mustered in June 6, 1865.

Present or absent Not stated

Company to which assigned H

Remarks: Credited to Pike

Co. 9 U. Ky.

Book mark :

C. Williams,

(342) *Copyist.*

I 15th C. U.S.C.T.

William Terry

Pvt, Co. K, 13 Reg't U. S. Col'd Inf

Age ____ years.

Appears on

Company Muster Roll*

for May June, 1865.

Joined for duty and enrolled:

When May 28, 1865.

Where Pikeville Ky

Period 3 years.

Mustered in:

When June 5, 1865.

Where Lumpkins Ky

Present or absent Present

Stoppage, $ 100 for ____

Due Gov't, $ 100 for ____

Valuation of horse, $ 100

Valuation of horse equipments, $ 100

Remarks: ____

*First current roll. No muster-in roll of this company on file.

Book mark: ____

(3586) *Copyist.*

13 H. Art'y. | U.S.C.T.

William Terry

Pt, Co. H, 13 Reg't U. S. Col'd H. Art'y.

Appears on

Company Muster Roll

for July ~ Aug, 1865.

Present or absent Present

Stoppage, $ 100 for

Due Gov't, $ 100 for

Valuation of horse, $ 100

Valuation of horse equipments, $ 100

Remarks: Mus Mo for Camp
by Gunshot Wd. 21

NEXT ROLL ON FILE MUSTER OUT.

Book mark:

(358) *Copyist.*

1 | **13 H. Art'y.** | **U.S.C.T.**

William Terry

Pt, Co. C, 13 Reg't U. S. Col'd H. Art'y.

Appears on **Co. Muster-out Roll,** dated Louisville Ky, Nov 18, 186 5.

Muster-out to date Nov 18, 186 5.

Last paid to June 30, 186 5.

Clothing account:

Last settled ....., 186 ; drawn since $ 100

Due soldier $ ..... 100; due U. S. $ 24 20/100

Am't for cloth'g in kind or money adv'd $ 100

Due U. S. for arms, equipments, &c., $ 100

Bounty paid $ ..... 100; due $ 100

Remarks: .....

.....

.....

.....

.....

.....

Book mark: .....

.....

(361) *Copyist.*

2038-a

Tetterton Henry

Co L, 13 U.S. Col'd Inf.
H. Artg.

Private	Private

CARD NUMBERS.

1	5 5 1 9 3 7 9	26	
2	5 5 1 9 1 3 2	27	
3	5 5 2 5 2 1 8	28	
4	5 5 2 5 3 6 7	29	
5	5 5 2 5 4 9 2	30	
6	9 1 2 9 5 3 4	31	
7	3 0 9 1 - C.T. - 85	32	
8		33	
9		34	
10		35	
11		36	
12		37	
13		38	
14		39	
15		40	
16		41	
17		42	
18		43	
19		44	
20		45	
21		46	
22		47	
23		48	
24		49	
25		50	

Book Mark: 3091 - C.T. - 1885.

See also C. C. 72 U.S.C. Inf

S. 1167315 P.O. m+gn.
S. 1167071 P.O. aft
D.P. 413420.
D.1249287 P.O. aft
S-2061344 P.O. m
90 misc 1020639 1/4/1943
Headstone appln. checked
approved 11/19/41

D. T. Townsend
Asst

4 | 13 H. Art'y. | U.S.C.T.

Correct name, Henry Tetterton

....., Co. L....., 13 Reg't U. S. Col'd H. Art'y.

Appears on

Company Descriptive Book

of the organization named above.

DESCRIPTION.

Age 18 years; height 5 feet 2 inches.

Complexion Brown

Eyes Blk ; hair Blk

Where born Kentucky

Occupation Farmer

ENLISTMENT.

When Feb 5, 186 5.

Where Bardstown Ky

By whom Lt. Watson; term 1 y'rs.

Remarks: Substitute

E. C. Hopkins
Copyist.

(383g)

/ | 13 H. Art'y. | U.S.C.T.

Correct name, Henry Tetterton

Henry Tetterton

Pvt., Co. L, 13 Reg't U. S. Col'd H. Art'y.

Age ..... years.

Appears on

Company Muster Roll*

for Feb June 30, 1865.

Joined for duty and enrolled:

When ....., 186 .

Where .....

Period 2 years

Mustered in:

When Oct 5, 1865.

Where Bowling Green

Present or absent Present

Stoppage, $.....100 for .....

Due Gov't, $.....100 for .....

Valuation of horse, $.....100

Valuation of horse equipments, $.....100

Remarks: Also 65 cts Canteen, Coat, Substitute

* First current roll. No muster-in roll of this company on file.

Book mark: .....

Leger

(3586) Copyright.

V | 13 H. Art'y. | U.S.C.T.

Correct name, Henry Tetterton

Henry Tillelson

Pvt., Co. L, 13 Reg't U. S. Col'd H. Art'y.

Appears on

M. and D. Roll of Men Transferred

to the organization named above,

from Co C 72 US C. Inf.

Roll dated Camp Nelson Ky July 3, 1865.

When enlisted ....., 186 .

Period for which enlisted 2 years.

When mustered in Feb 6, 1865.

Present or absent Not stated

Company to which assigned .....

Remarks: Sub fm L. A. Graham

3 Dist Ky

Book mark: 3091 - C.T. - 1885.

(A. Merchant)

(342) *Copyist.*

13 H. Art'y. | U.S.C.T.

Correct name, Henry Tetterton

Henry Tillotson

Pvt., Co....., 13 Reg't U. S. Col'd H. Art'y.

Appears on

M. and D. Roll of Men Transferred

to the organization named above,

from 7 2 M.s.c.l.

Roll dated July 3, 186 5.

When enlisted ....., 186 .

Period for which enlisted 2 years.

When mustered in Feb 1, 186 5.

Present or absent not stated

Company to which assigned L

Remarks:

3 Dist. Ky

Sub. for J. L. Durham

Book mark :

(342) J Underwood

Copyist.

	13 H. Art'y.	U.S.C.T.

Correct name, Henry Tetterton

Henry Tillotson

Pvt., Co. L, 13 Reg't U. S. Col'd H. Art'y.

Appears on

Company Muster Roll

for July & Aug, 1865.

Present or absent Present

Stoppage, $.....100 for .....

.....

Due Gov't, $.....100 for .....

.....

Valuation of horse, $.....100

Valuation of horse equipments, $.....100

Remarks: Took 65 cts one
Canteen lost.

.....

.....

.....

NEXT ROLL ON FILE MUSTER OUT.

.....

.....

Book mark: .....

Leger

Copyist.

I | **13** H. Art'y. | **U.S.C.T.**

Correct name, Henry Tetterton

Henry Tetterton

Pvt., Co. L, 13 Reg't U. S. Col'd H. Art'y.

Appears on **Co. Muster-out Roll,** dated

Louisville Ky, Nov 18, 1865.

Muster-out to date Nov 18, 1865.

Last paid to June 30, 1865.

Clothing account:

Last settled ....., 186 ; drawn since $ 100

Due soldier $ ....100; due U. S. $ 100

Am't for cloth'g in kind or money adv'd $ 70 50/100

Due U. S. for arms, equipments, &c., $ 100

Bounty paid $ ....100; due $ 100

Remarks: .....

Book mark: .....

Logan

(361) *Copyist.*

F | 13 Ky Cavly. | U.S.V.

Correct name, Henry Tetterton
Henry Tillatson

1st, Co. L, 13 Reg't U.S.C.H.A.

NOTATION.

Book mark: 3091 P.F. 1885

Record and Pension Office,

WAR DEPARTMENT,

Washington, Apl. 13, 1895.

It has this day (c. Apl. 13, 1895,) been determined by this Department from records on file and evidence submitted that the correct name of this soldier is Henry Tetterton.

See also Co. L, 1st U.S.C.T.

Morgan

(440) *Copyist.*

Gilson Henry

..... Co. F; 13 Reg't U.S.C.H.A.

(CIVIL WAR)

(Philippine Insurrection.)

1 Inclosures.

Bed Cards		Ex. Preliminary to M. O.	
Burial Records		Final Statements	
Certs. of Dis. for Discharge		Fines	
C. M. Charges		Furloughs or L. of A.	
Descriptive Lists		Med. Certificates	
Descriptive and Assignment Cards		Med. Des. Lists	
Discharge Certificates		Orders	
Enlistment Papers		Resignations	

Other papers relating to—

Admission to Hosp'l		Furlough or L. of A.	
Confinement		Med. Examination	
Contracts		Misc. Information	
Death or Effects		Pay or Clothing	
Desertion		Personal Reports	
Discharge from Hosp'l		Rank	
Discharge from Service		Transfer to Hosp'l	
Duty		Transportation	
Asst Surg	1		

Statement of Service Reference Slip.

Office Pleasanton

Claim No. 10 20 639

Henry Tilson
(Name.)

....., Co. F., 13 Reg't U.S.C.H.A.

To Arch Div. 11/4, 1914

For Reply to C of P.

Johnson
T.W.S

R.R. Dio

No record of
marriage found.
There are no
marriage records
State of Ky.
prior to 1866
on file.

Harley
Ullmer

Statement furnished Nov 4, 1914

T.W.S

Form No. 447—A. G. O.
Ed. July 26-13—20,000.

3—2792

Previous number. 2038-a

2039

Thomas. Pen

Co ....., 13 U.S.Col'd H. Art'y.

Private | Private

CARD NUMBERS.

1	5V/6/67	26	
2		27	
3		28	
4		29	
5		30	
6		31	
7		32	
8		33	
9		34	
10		35	
11		36	
12		37	
13		38	
14		39	
15		40	
16		41	
17		42	
18		43	
19		44	
20		45	
21		46	
22		47	
23		48	
24		49	
25		50	

Book Mark .....

See also .....

T | 13 H. Art'y. | U.S.C.T.

Ben Thomas

Appears with rank of Pvt on

Muster and Descriptive Roll of a Detachment of U. S. Vols. forwarded

for the 13 Reg't U. S. Col'd H. Art'y. Roll dated

Louisville Ky Apl 7, 186 5.

Where born Shelby Co Ky

Age 16 y'rs; occupation Farmer

When enlisted Apl 7, 186 5.

Where enlisted Louisville Ky

For what period enlisted 3 years.

Eyes blk; hair blk

Complexion blk; height 5 ft. 3½ in.

When mustered in Apl 7, 186 5.

Where mustered in Louisville Ky

Bounty paid $ 100; due $ 100

Where credited Shelby Co Ky

Company to which assigned

Remarks: Enlisted by order Sec War under Gen Thomas Order No 20. Ast taken up a rolls of Regt.

Book mark:

Rose

(339) *Copyist.*

2840

Thomas. Edward

Co. B, 13 U.S.Col'd H.Art'y.

Private | Private

CARD NUMBERS.

1	55185 30	26	
2	55 1795 3	27	
3	55 2395 0	28	
4	55 2410 6	29	
5	55 2425 1	30	
6	91292 21	31	
7		32	
8		33	
9		34	
10		35	
11		36	
12		37	
13		38	
14		39	
15		40	
16		41	
17		42	
18		43	
19		44	
20		45	
21		46	
22		47	
23		48	
24		49	
25		50	

Book Mark:

See also Co B. 121. USCT Inf

S-937188-90.aff
S-937234-90.aff
D.2942613 Pourun

J. J. Thurand & Co

H | 13 H. Art'y. | U.S.C.T.

Edward Thomas

....., Co. H, 13 Reg't U. S. Col'd H. Art'y.

Appears on

Company Descriptive Book

of the organization named above.

DESCRIPTION.

Age 28 years; height 5 feet 7½ inches.

Complexion Black

Eyes Blk; hair Blk

Where born Mason Co. Ky

Occupation Laborer

ENLISTMENT.

When Nov 8, 1864.

Where Maysville Ky

By whom Capt Smith; term 3 y'rs.

Remarks:

Mack

J | 13 H. Art'y. | U.S.C.T.

Edward Thomas

Pvt., Co. A, 13 Reg't U. S. Col'd H. Art'y.

Appears on

M. and D. Roll of Men Transferred

to the organization named above,

from Co. B, 121 Reg't U. S. Colored Infantry.

Roll dated Camp Nelson, Ky. June 23, 1865.

When enlisted Nov. 28, 1864.

Period for which enlisted 3 years.

When mustered in Nov 30, 1864

Present or absent Not stated

Company to which assigned

Remarks:

Book mark:

Goodwater

(342) *Copyist.*

T | 13 H. Art'y. | U.S.C.T.

Edward Thomas

Pvt., Co. ....., 13 Reg't U. S. Col'd H. Art'y.

Appears on

M. and D. Roll of Men Transferred

to the organization named above,

from Co....., 121 Reg't U. S. Colored Infantry.

Roll dated June 23, 1865.

When enlisted Nov. 28, 1864.

Period for which enlisted 3 years.

When mustered in Nov. 30, 1864.

Present or absent Not stated.

Company to which assigned H

Remarks: Credited to Mason's

Co. 9 S. Ky

Book mark :

(342) C. Williams,
Copyist.

F | 13th U.S.C.T.

Co. Edward Travis

Pvt, Co. 6, 13 Reg't U. S. Col'd Inf.

Age ____ years.

Appears on

Company Muster Roll*

for May June, 1865.

Joined for duty and enrolled:

When Nov 24, 1864.

Where Maysville Ky

Period 3 years.

Mustered in:

When Nov 30, 1864.

Where Lumpkins Ky

Present or absent Present

Stoppage, $ 100 for

Due Gov't, $ 65/100 for C & G. Equip Cost

Valuation of horse, $ 100

Valuation of horse equipments, $ 100

Remarks:

*First current roll. No muster-in roll of this company on file.

Book mark:

(358b) *Copyist.*

I | **13** H. Art'y. | **U.S.C.T.**

Edward Thomas

R, Co. H, 13 Reg't U. S. Col'd H. Art'y.

Appears on

Company Muster Roll

for Sept & Aug, 1865.

Present or absent Present

Stoppage, $ 100 for

Due Gov't, $ 100 for

Valuation of horse, $ 100

Valuation of horse equipments, $ 100

Remarks: Mustd. for Camp & Equip. 75

NEXT ROLL ON FILE MUSTER OUT.

Book mark :

(358) *Copyist.*

13 H. Art'y. | U.S.C.T.

Edward Turner

Pvt., Co. K, 13 Reg't U. S. Col'd H. Art'y.

Appears on **Co. Muster-out Roll,** dated Louisville Ky, Nov 18, 1865.

Muster-out to date Nov 18, 1865.

Last paid to June 30, 1865.

Clothing account:

Last settled ....., 186 ; drawn since $ 100

Due soldier $ 19 86/100; due U. S. $ 100

Am't for cloth'g in kind or money adv'd $ 100

Due U. S. for arms, equipments, &c., $ 100

Bounty paid $ 100 00/100; due $ 100

Remarks: due US for Ord Cost transfer. 88

Book mark: 1462, 1879

---

(361)

Copyist.

2061

Thomas George

Co C, 13 U.S. Col'd H. Art'y.

Private | Private

CARD NUMBERS.

1	5-5-15-698	26	
2	5-5-16902	27	
3	5-5-21539	28	
4	5-5-21710	29	
5	5-5-21889	30	
6	5-5-22032	31	
I	9128419	32	
8	43150761	33	
9		34	
10		35	
11		36	
12		37	
13		38	
14		39	
15		40	
16		41	
17		42	
18		43	
19		44	
20		45	
21		46	
22		47	
23		48	
24		49	
25		50	

Book Mark:

See also

13 H. Art'y. | U.S.C.T.

[illegible], Co. C, 13 Reg't U. S. Col'd H. Art'y.

Appears on

Company Descriptive Book

of the organization named above.

DESCRIPTION.

Age 21 years; height 5 feet 1 inches.

Complexion Dark

Eyes Dark; hair Dark

Where born Oldham County Kentucky

Occupation Laborer

ENLISTMENT.

When Jan 18, 1864.

Where Louisville Ky

By whom Capt Smith; term 2 y'rs.

Remarks:

Deserted

Copyist.

T | 13 H. Art'y. | U.S.C.T.

George Thomas

Appears with rank of Pvt on

Muster and Descriptive Roll of a Detachment of U. S. Vols. forwarded

for the 13 Reg't U. S. Col'd H. Art'y. Roll dated

Draft Rendz. Louisville, Ky Jan 24, 1865.

Where born Oldham Ky

Age 21 y'rs; occupation Laborer

When enlisted Jan 18, 1865.

Where enlisted Louisville

For what period enlisted 3 years.

Eyes Dark; hair Black

Complexion Dark; height 5 ft. 1 in.

When mustered in Jan 18, 1865.

Where mustered in Louisville

Bounty paid $ 100; due $ 100

Where credited 5th Dist Ky.

Company to which assigned

Remarks:

Book mark:

Hammer

(339) *Copyist.*

13 Ky A

U.S.C.T.

George Thomas

Appears with rank of Pvt on

Muster and Descriptive Roll

of Detachment of U.S. Colored Troops Mustered

Louisville Ky, Jan 18, 1865. Roll dated

Where born Oldham Ky

Age 21 years; occupation Laborer

When enlisted Jan 18, 1865.

Where enlisted Louisville Ky.

For what period enlisted 3 years.

Eyes Dark; hair Dark

Complexion Dark; height 5 ft. 1 in.

When mustered in Jan. 18, 1865.

Where mustered in Louisville

Bounty paid $ 100; due $ 100

Clothing account:

Last settled ____, 186 ; drawn since $ 100

Date of first muster ____, 186 .

Company to which assigned ____

Remarks: Credited to Oldham Co.

5th Dist. Ky.

Book mark : ____

Scotch

(356m) Copyist.

B | 13 H. Art'y. U.S.C.T.

George Thomas

Appears with rank of Pvt on

Muster and Descriptive Roll of a Detachment of U. S. Vols. ~~forwarded~~ Organized

for the 13 Reg't U. S. Col'd H. Art'y. Roll dated

Camp Nelson Ky June 23 1865.

Where born Oldham Kentucky

Age 21 y'rs; occupation Laborer

When enlisted Jan 18, 1865.

Where enlisted Louisville, Ky.

For what period enlisted 3 years.

Eyes Dark; hair Dark

Complexion Dark; height 5 ft. 1 in.

When mustered in Jan. 18, 1865.

Where mustered in Louisville Ky

Bounty paid $ None 100; due $ 100

Where credited 5th Cong. Dist. Ky

Company to which assigned C

Remarks:

Book mark:

E B Taylor

(339) *Copyist.*

I | 13 H. Art'y. | U.S.C.T.

George Thomas

Pvt, Co. C, 13 Reg't U. S. Col'd H. Art'y.

Age ..... years.

Appears on

Company Muster Roll*

for to Apr 30, 1865.

Joined for duty and enrolled:

When Jan 18, 1865.

Where Louisville Ky

Period 3 years

Mustered in:

When Jan 18, 1865.

Where Louisville Ky

Present or absent Present

Stoppage, $ 100 for .....

Due Gov't, $ 100 for .....

Valuation of horse, $ 100

Valuation of horse equipments, $ 100

Remarks: .....

* First current roll. No muster-in roll of this company on file.

Book mark: .....

Vanstrahn

(358b) Copyist.

J | 13 H. Art'y. | U.S.C.T.

George Thomas
Pt, Co. C, 13 Reg't U. S. Col'd H. Art'y.

Appears on

Company Muster Roll

for May & June, 1865.

Present or absent Present

Stoppage, $ 100 for

Due Gov't, $ 100 for

Valuation of horse, $ 100

Valuation of horse equipments. $ 100

Remarks: Mo Bounty rec'd. Due first Install-ment of Bounty.

FROM SECOND AUDITOR'S ROLL.

Book mark:

Vanstruhn

(358) Copyist.

I | 13 H. Art'y. | U.S.C.T.

George Howard

Pt, Co. C, 13 Reg't U. S. Col'd H. Art'y.

Appears on

Company Muster Roll

for July & Aug, 1865.

Present or absent Present

Stoppage, $ 100 for

Due Gov't, $ 100 for

Valuation of horse, $ 100

Valuation of horse equipments. $ 100

Remarks: Has furnished substitute County $100.00

NEXT ROLL ON FILE MUSTER OUT.

Book mark:

Van Houten

(358) Copyist.

D | 13 H. Art'y. | U.S.C.T.

George Thomas

Pt, Co. D, 13 Reg't U. S. Col'd H. Art'y.

Appears on **Co. Muster-out Roll,** dated

Louisville Ky, Nov 18, 1865.

Muster-out to date Nov 18, 1865.

Last paid to June 30, 1865.

Clothing account:

Last settled ....., 186 ; drawn since $ 100

Due soldier $ ..... 100; due U. S. $ 15 46/100

Am't for cloth'g in kind or money adv'd $ 100

Due U. S. for arms, equipments, &c., $ 100

Bounty paid $ 100 00/100; due $ 100

Remarks: .....

Book mark: .....

Jan Ahnlen

(361) *Copyist.*

2042

Thomas. Henry

Co G, 13 U.S.Col'd H. Art'y.

Private	Private

CARD NUMBERS.

1	55184 02	26	
2	55180 83	27	
3		28	
4		29	
5		30	
6		31	
7		32	
8		33	
9		34	
10		35	
11		36	
12		37	
13		38	
14		39	
15		40	
16		41	
17		42	
18		43	
19		44	
20		45	
21		46	
22		47	
23		48	
24		49	
25		50	

Book Mark:

See also Leo Co. 121. U.S.C. Inf.

J | 13 H. Art'y. | U.S.C.T.

Henry Thomas

Pvt., Co. G, 13 Reg't U. S. Col'd H. Art'y.

Appears on

M. and D. Roll of Men Transferred

to the organization named above,

from Co C, 21 U.S. Col'd Inf'y.

Roll dated Camp Nelson, Ky. June 25, 1865.

When enlisted Dec 13, 1864.

Period for which enlisted 3 years.

When mustered in Dec 19, 1865.

Present or absent

Company to which assigned

Remarks: Absent Sick Feb. 28. 1865

Name taken up on this Roll of Co in red ink.

Book mark: 2556-1879

Rochester

(342) *Copyist.*

G | 13 H. Art'y. | U.S.C.T.

Henry Thomas

Pvt, Co. ....., 13 Reg't U. S. Col'd H. Art'y.

Appears on

M. and D. Roll of Men Transferred

to the organization named above,

from Co....., 12th Reg't U. S. Colored Infantry.

Roll dated June 26, 1865.

When enlisted Dec, 13, 1864.

Period for which enlisted ..... 3 ..... years.

When mustered in Dec, 19, 1864.

Present or absent .....

Company to which assigned.....

Remarks: Credited to Bath

Co. 9 S. Ky.

Deserted Feb. 28, 65.

Book mark :.....

C. Williams,
Copyist.

(342)

2043

Thomas. Henry

Co L, 13 U.S. Col'd H. Art'y.

Enrolled	Enlisted

CARD NUMBERS.

1	55 19378	26	
2	55 19131	27	
3	55 28219	28	
4	55 28366	29	
5	55 28491	30	
6	91295-33	31	
7		32	
8		33	
9		34	
10		35	
11		36	
12		37	
13		38	
14		39	
15		40	
16		41	
17		42	
18		43	
19		44	
20		45	
21		46	
22		47	
23		48	
24		49	
25		50	

Book Mark:

See also Leo B. 72 U.S.C.T. Inf

7 | 13 H. Art'y. | U.S.C.T.

Louis Thomas

....., Co. E, 13 Reg't U. S. Col'd H. Art'y.

Appears on

Company Descriptive Book

of the organization named above.

DESCRIPTION.

Age 25 years; height 5 feet 9 inches.

Complexion Black

Eyes Black; hair Black

Where born Louisville Ky

Occupation Farmer

ENLISTMENT.

When June 6, 1865.

Where Covington Ky

By whom Capt Mitchell, term 3 y'rs.

Remarks:

E. N. Kirpatrick

(383*a*) **Copyist.**

T | **13** H. Art'y. | **U.S.C.T.**

Henry Thomas

Pvt., Co. L, 13 Reg't U. S. Col'd H. Art'y.

Age ..... years.

Appears on

Company Muster Roll*

for To June 30, 1865.

Joined for duty and enrolled:

When Jan 6, 1865.

Where Covington Ky

Period 3 years

Mustered in:

When Jan 6, 1865.

Where Covington Ky

Present or absent Present

Stoppage, $ 100 for .....

Due Gov't, $ 100 for .....

Valuation of horse, $ 100

Valuation of horse equipments, $ 100

Remarks: .....

* First current roll. No muster-in roll of this company on file.

Book mark: .....

Leger

(3586) Copyist.

V | **13** H. Art'y. | **U.S.C.T.**

Henry Thomas

Pri., Co. G, 13 Reg't U. S. Col'd H. Art'y.

Appears on

M. and D. Roll of Men Transferred

to the organization named above,

from Co B 72 USC Inf

Roll dated Camp Nelson Ky July 3, 1865.

When enlisted Jan 6, 1865.

Period for which enlisted 3 years.

When mustered in Jan 6, 1865.

Present or absent not stated

Company to which assigned

Remarks: Nicholas Co.
7 Dist Ky

Book mark :

J Merchant

(342) *Copyist.*

I | **13** H. Art'y. | **U.S.C.T.**

Henry Thomas

Pvt., Co...., 13 Reg't U. S. Col'd H. Art'y.

Appears on

M. and D. Roll of Men Transferred

to the organization named above,

from 72 N. S. C. I.

Roll dated July 3, 186 5.

When enlisted Jan 6, 186 5.

Period for which enlisted 3 years.

When mustered in Jan 6, 1865.

Present or absent Not stated

Company to which assigned L

Remarks:

7 Dist. Ky

Book mark :

(342) J Hudson
Copyist.

F | **13** H. Art'y. | **U.S.C.T.**

Henry Thomas

Pvt, Co. L, 13 Reg't U. S. Col'd H. Art'y.

Appears on

Company Muster Roll

for July & Aug, 1865.

Present or absent Present

Stoppage, $ 100 for

Due Gov't, $ 100 for

Valuation of horse, $ 100

Valuation of horse equipments, $ 100

Remarks:

NEXT ROLL ON FILE MUSTER OUT.

Book mark:

Leger

(358) *Copyist.*

J | 13 H. Art'y. | U.S.C.T.

Henry Jackson

Pvt., Co. L, 13 Reg't U. S. Col'd H. Art'y.

Appears on **Co. Muster-out Roll,** dated Louisville Ky, Nov 18, 186 5.

Muster-out to date Nov 16, 186 5.

Last paid to June 30, 186 5.

Clothing account:

Last settled ....., 186 ; drawn since $ 100

Due soldier $ ..... 100; due U. S. $ 100

Am't for cloth'g in kind or money adv'd $ 21 23/100

Due U. S. for arms, equipments, &c., $ 100

Bounty paid $ 100 00; due $ 100

Remarks: .....

Book mark: 3437 1868

Copyist.

2044

Thomas James H.

Co F, 13 U.S.Col'd H.Art'y.

Enate | Enate

CARD NUMBERS.

1	55 1870	26	
2	55 1806 8	27	
3	55 2445 6	28	
4	55 2477 8	29	
5		30	
6		31	
7		32	
8		33	
9		34	
10		35	
11		36	
12		37	
13		38	
14		39	
15		40	
16		41	
17		42	
18		43	
19		44	
20		45	
21		46	
22		47	
23		48	
24		49	
25		50	

Book Mark: Lo. B. 14/957

See also Lec D. 121. 11 S Lo Inf.

S. 2529367 and, Ms.
MS. 1179936

J. P. Knight Esq

J | 13 H. Art'y. | U.S.C.T.

James M. Thomas

Pvt., Co. I, 13 Reg't U. S. Col'd H. Art'y.

Appears on

M. and D. Roll of Men Transferred

to the organization named above,

from Co D 121 US C Inf

Roll dated Camp Nelson Ky June 23, 1865.

When enlisted 5 Apr, 1865.

Period for which enlisted 3 years.

When mustered in 7 Apr, 1865.

Present or absent Not stated

Company to which assigned

Remarks: Died at Gen Hosp Camp Nelson Ky May 29/65

x Inserted by compr.

Book mark: 287, 536

A. Merchant

(342) *Copyist.*

G | 13 H. Art'y. | U.S.C.T.

James W. Thomas

Pvt., Co. ....., 13 Reg't U. S. Col'd H. Art'y.

Appears on

M. and D. Roll of Men Transferred

to the organization named above,

from Co....., 121 Reg't U. S. Colored Infantry.

Roll dated June 26, 1865.

When enlisted Apr'l 6, 1865.

Period for which enlisted 3 years.

When mustered in Apr'l 7, 1865.

Present or absent .....

Company to which assigned .....

Remarks: Died in Hosp. Camp

Nelson, May 29, '65.

.....

.....

.....

.....

.....

.....

Book mark : .....

C. Williams,

(342) *Copyist.*

D | 13 H. Art'y. | U.S.C.T.

James H. Thomas

P, Co. b, 13 Reg't U. S. Col'd H. Art'y.

Age ..... years.

Appears on

Company Muster Roll*

for June 30, 1865.

Joined for duty and enrolled:

When Aug. 3, 1865.

Where Maysville Ky

Period 3 years

Mustered in:

When Aug. 7, 1865.

Where Greenupsburg Ky

Present or absent.....

Stoppage, $.....100 for .....

Due Gov't, $.....100 for.....

Valuation of horse, $.....100

Valuation of horse equipments, $.....100

Remarks: Died at Genl. Hosp't Camp Nelson Ky 29th May 1865

* First current roll. No muster-in roll of this company on file.

Book mark: 287-536 Died June 29 1865

(3586) Copyist.

JAN. 16 1957
5524456

Sg. 1865 L.B. 44/9.5-7

D | **13** H. Art'y. | **U.S.C.T.**

Jas. H. Thomas

R, Co. C, 13 Reg't U. S. Col'd H. Art'y.

Appears on **Co. Muster-out Roll,** dated

Penn's Neck N.J., Nov. 12, 186 5.

Muster-out to date ....., 186 .

Last paid to ....., 186 .

Clothing account:

Last settled ....., 186 ; drawn since $.....100

Due soldier $.....100; due U. S. $.....100

Am't for cloth'g in kind or money adv'd $.....100

Due U. S. for arms, equipments, &c., $.....100

Bounty paid $.....100; due $.....100

Remarks: Died

Not organized Roll

Book mark: Alive June 29 1865 LB 14/767

---

(361) Copyist.

JAN. 5524778 1891

died June 29" 1865 L.B.

14
95-1

2049

Thomas. Jerry

Co. I, 13 U.S. Col'd H. Art'y.

Private | Private

CARD NUMBERS.

1	5518694	26	
2	5517966	27	
3	5524430	28	
4	5524587	29	
5	5524737	30	
6	9129811	31	
7		32	
8		33	
9		34	
10		35	
11		36	
12		37	
13		38	
14		39	
15		40	
16		41	
17		42	
18		43	
19		44	
20		45	
21		46	
22		47	
23		48	
24		49	
25		50	

Book Mark:

See also Ser E. 121. 2[illegible]

T | 13 H. Art'y. | U.S.C.T.

Jerry Thomas

....., C6. C....., 13 Reg't U. S. Col'd H. Art'y.

Appears on

Company Descriptive Book

of the organization named above.

DESCRIPTION.

Age 17 years; height 5 feet 1/2 inches.

Complexion Blk

Eyes Brn ; hair Blk

Where born Hennyka. Ky

Occupation Laborer

ENLISTMENT.

When May 25, 1863.

Where Maysville Ky.

By whom Wilson ; term 3 y'rs.

Remarks:

E. Whitcomb

(383*g*) **Copyist.**

D of | 13 H. Art'y. | U.S.C.T.

Jerry Thomas

Pvt., Co. D, 13 Reg't U. S. Col'd H. Art'y.

Appears on

M. and D. Roll of Men Transferred

to the organization named above,

from Co E 12 (1) U S C Inf

Roll dated Camp Nelson Ky June 23, 1865.

When enlisted 25 May, 1865.

Period for which enlisted 3 years.

When mustered in 27 May, 1865.

Present or absent Not stated.

Company to which assigned

Remarks: Credit to Fleming Co.,
Ky Dist Ky

Book mark :

S. Merchant

(342) *Copyist.*

9 | 13 H. Art'y. | U.S.C.T.

Jerry Thomas

Pvt., Co. ....., 13 Reg't U. S. Col'd H. Art'y.

Appears on

M. and D. Roll of Men Transferred

to the organization named above,

from Co....., 121 Reg't U. S. Colored Infantry.

Roll dated June 25, 1865.

When enlisted May 25, 1865.

Period for which enlisted 3 years.

When mustered in May 27, 1865.

Present or absent Absent

Company to which assigned I

Remarks: Credited to Flem-
ming Co. Ky.

Book mark :

C. Williams

(342) *Copyist.*

D | 13 H. Art'y. | U.S.C.T.

Pvt. Thomas

R S, Co. H, 13 Reg't U. S. Col'd H. Art'y.

Age ..... years.

Appears on

Company Muster Roll*

for June 30, 1865.

Joined for duty and enrolled:

When May 1st, 1865.

Where Maysville Ky

Period 3 years

Mustered in:

When May 27, 1865.

Where Greenupsburg Ky

Present or absent

Stoppage, $ 100 for

Due Gov't, $ 100 for

Valuation of horse, $ 100

Valuation of horse equipments, $ 100

Remarks: Due U.S. by C. O. 53 cts

* First current roll. No muster-in roll of this company on file.

Book mark:

(3586) Сорунм.

A | 13 H. Art'y. | U.S.C.T.

Geo. Dennis

Pvt., Co. I, 13 Reg't U. S. Col'd H. Art'y.

Appears on

Company Muster Roll

for July & Aug., 186 4.

Present or absent Present

Stoppage, $ 100 for

Due Gov't, $ 100 for

Valuation of horse, $ 100

Valuation of horse equipments, $ 100

Remarks:

NEXT ROLL ON FILE MUSTER OUT.

Book mark:

(358) Copyist.

D | **13 H. Art'y.** | **U.S.C.T.**

Pvt. Co. C, Co. ——, 13 Reg't U. S. Col'd H. Art'y.

Appears on **Co. Muster-out Roll,** dated Louisville Ky, Nov. 18, 1865.

Muster-out to date Nov. 18, 1865.

Last paid to June 30, 1865.

Clothing account:

Last settled ——, 186 ; drawn since $ —— 100

Due soldier $ —— 100; due U. S. $ 52 70 100

Am't for cloth'g in kind or money adv'd $ —— 100

Due U. S. for arms, equipments, &c., $ —— 100

Bounty paid $ —— 100; due $ —— 100

Remarks: ——

Book mark: ——

(361)

Copyist.

Thomas. John 2646

Co I, 13 U.S.Col'd H. Art'y.

Private | Private.

CARD NUMBERS.

1	55187 00	26	
2	55179 71	27	
3	55 2443 6	28	
4	55 2450	29	
5	55 2473	30	
6	51298 17	31	
7		32	
8		33	
9		34	
10		35	
11		36	
12		37	
13		38	
14		39	
15		40	
16		41	
17		42	
18		43	
19		44	
20		45	
21		46	
22		47	
23		48	
24		49	
25		50	

Book Mark:

See also Co D. 121. USCoInf

S.1757189 P.O. Mdlk.
S-2089543 And W.D. Tom P. Mdlk
D.2204425 And W.D.

J. F. Trammell Dec'r

T | 13 H. Art'y. | U.S.C.T.

John Thomas

....., Co. D, 13 Reg't U. S. Col'd H. Art'y.

Appears on

Company Descriptive Book

of the organization named above.

DESCRIPTION.

Age 19 years; height 6 feet ..... inches.

Complexion Dark

Eyes Blk ; hair Blk

Where born Bath Co. Ky

Occupation Farmer

ENLISTMENT.

When Apl 5, 1865.

Where Maysville Ky

By whom Lt. Clapp ; term 3 y'rs.

Remarks:

E H Isaacs

(383*g*) Copyist.

5 | 13 H. Art'y. | U.S.C.T.

John Thomas

Pvt, Co. ....., 13 Reg't U. S. Col'd H. Art'y.

Appears on

M. and D. Roll of Men Transferred

to the organization named above,

from Co....., 121 Reg't U. S. Colored Infantry.

Roll dated June 23, 1865.

When enlisted Nov. 5, 1863.

Period for which enlisted 3 years.

When mustered in Nov. 7, 1863

Present or absent Not stated

Company to which assigned I

Remarks: Credited to Bath Co

9 S. Ky.

Book mark :

C. Williams,

(342) *Copyist.*

D | 13 H. Art'y. | U.S.C.T.

John Thomas

Pte, Co. D, 13 Reg't U. S. Col'd H. Art'y.

Appears on

M. and D. Roll of Men Transferred

to the organization named above,

from Co D 121 USC Inf

Roll dated Camp Nelson Ky June 23, 1865.

When enlisted 5 Apr, 1865.

Period for which enlisted 3 years.

When mustered in 7 Apr, 1865.

Present or absent Not stated

Company to which assigned

Remarks: Credit to Bath Co.
7th Dist Ky

Book mark :

S. Merchant

(342) *Copyist.*

I | 13 H. Art'y. | U.S.C.T.

John D Reynolds

D, Co. C, 13 Reg't U. S. Col'd H. Art'y.

Age ..... years.

Appears on

Company Muster Roll*

for Jan June 30, 1865.

Joined for duty and enrolled:

When Oct. 5, 1863.

Where Maysville Ky.

Period 3 years

Mustered in:

When Dec. 7, 1863.

Where Bermuda Burg Ky

Present or absent Present

Stoppage, $ 100 for .....

Due Gov't, $ 100 for .....

Valuation of horse, $ 100

Valuation of horse equipments, $ 100

Remarks: .....

* First current roll. No muster-in roll of this company on file.

Book mark: .....

(3586) Copyist.

G | **13 H. Art'y.** | **U.S.C.T.**

John Thomas

Pvt., Co. I, 13 Reg't U. S. Col'd H. Art'y.

Appears on

Company Muster Roll

for July & Aug., 186 5.

Present or absent Absent

Stoppage, $ 100 for

Due Gov't, $ 100 for

Valuation of horse, $ 100

Valuation of horse equipments, $ 100

Remarks: Sick in Q. M. Genl.

Hospl. Camp Nelson Ky

NEXT ROLL ON FILE MUSTER OUT.

Book mark:

R. F. Hall

Copyist.

J. | **13 H. Art'y.** | **U.S.C.T.**

John Roman

K, Co. L, 13 Reg't U. S. Col'd H. Art'y.

Appears on **Co. Muster-out Roll,** dated Louisville Ky, Dec. 18, 1865.

Muster-out to date Dec. 18, 1865.

Last paid to Never Paid, 186 .

Clothing account:

Last settled ....., 186 ; drawn since $ 100

Due soldier $ ..... 100; due U. S. $ Dec 19 100

Am't for cloth'g in kind or money adv'd $ 100

Due U. S. for arms, equipments, &c., $ 100

Bounty paid $ ..... 100; due $ 100 00 100

Remarks: .....

.....

.....

.....

.....

.....

Book mark: .....

D. F. Hall

Copyist.

3047

Thomas Lewis

Co a, 13 U.S.Col'd H.Art'y.

Sergeant.

CARD NUMBERS.

1	26
2 See Louis Thomas	27
3	28
4	29
5	30
6	31
7	32
8	33
9	34
10	35
11	36
12	37
13	38
14	39
15	40
16	41
17	42
18	43
19	44
20	45
21	46
22	47
23	48
24	49
25	50

Book Mark:

See also

2048

Thomas. Lewis A.

Co E, 13 U.S. Col'd H. Art'y.

Sergeant.	Sergeant.

CARD NUMBERS.

1	55 18094	26	
2	55 17976	27	
3	55 24786	28	
4	55 25064	29	
5	91 29 23-3	30	
6		31	
7		32	
8		33	
9		34	
10		35	
11		36	
12		37	
13		38	
14		39	
15		40	
16		41	
17		42	
18		43	
19		44	
20		45	
21		46	
22		47	
23		48	
24		49	
25		50	

Book Mark: E B. T. 11. P 532

See also Co F 121. U S Col'd Inf.

F | 13 H. Art'y. | U.S.C.T.

Lewis S. Thomas

....., Co. K, 13 Reg't U. S. Col'd H. Art'y.

Appears on

Company Descriptive Book

of the organization named above.

DESCRIPTION.

Age 25 years; height 5 feet 7 inches.

Complexion Yellow

Eyes Grey; hair Black

Where born Fayetteville Co. Va

Occupation Laborer

ENLISTMENT.

When Jan 5, 186 5.

Where Yorktown Va

By whom Lt. Woodruff, term 5 y'rs.

Remarks:

Promoted Sergt
Apl 6/65 Died in
Alabama Gen. Hospital
Carrollton Ky July
21/65 of Typhoid Fever

E. H. Sharcomb

(383g) Copyist.

7 | 13 H. Art'y. | U.S.C.T.

Louis S. Thomas

Sergt., Co. K, 13 Reg't U. S. Col'd H. Art'y.

Appears on

M. and D. Roll of Men Transferred

to the organization named above,

from Co. F, 121

Roll dated Camp Nelson, Ky. June 23, 1865.

When enlisted May 30, 1865.

Period for which enlisted 3 years.

When mustered in June 5, 1865.

Present or absent Not stated

Company to which assigned

Remarks: Appointed Sergt. May 30. 1865

Book mark :

Rod Sauter

(342) *Copyist.*

9 | 13 H. Art'y. | U.S.C.T.

Louis S. Thomas

Sgt., Co. ....., 13 Reg't U. S. Col'd H. Art'y.

Appears on

M. and D. Roll of Men Transferred

to the organization named above,

from Co....., 121 Reg't U. S. Colored Infantry.

Roll dated June 26, 1866.

When enlisted May 30, 1866.

Period for which enlisted 3 years.

When mustered in June 6, 1866.

Present or absent Vol detached

Company to which assigned K

Remarks: Credited to Pike Co.

9 D Ky.

Book mark :

C. Williams

(342) *Copyist.*

F | 13 H. Art'y. | U.S.C.T.

Lewis S. Thomas

Sergt, Co. K, 13 Reg't U. S. Col'd H. Art'y.

Age ..... years.

Appears on

Company Muster Roll*

for June 30, 1865.

Joined for duty and enrolled:

When May 30, 1865.

Where Piketon Ky

Period 3 years

FROM SECOND AUDITOR'S ROLL.

Mustered in: NEXT ROLL ON FILE MUSTER OUT.

When June 5, 1865.

Where Greensburg Ky

Present or absent Present

Stoppage, $ 100 for .....

Due Gov't, $ 100 for .....

Valuation of horse, $ 100

Valuation of horse equipments, $ 100

Remarks: Transferred from 12 U. S. C. L. Asst. Sergt May 30/65

* First current roll. No muster-in roll of this company on file.

Book mark: .....

Galligan

(3586) Copyist.

T | 13 H. Art'y. | U.S.C.T.

Lewis Thomas

Sergt, Co. K, 13 Reg't U. S. Col'd H. Art'y.

Appears on **Co. Muster-out Roll,** dated Louisville Ky., Nov. 18 1865.

Muster-out to date ....., 186 .

Last paid to ....., 186 .

Clothing account:

Last settled....., 186 ; drawn since $.....100

Due soldier $.....100; due U. S. $.....100

Am't for cloth'g in kind or money adv'd $.....100

Due U. S. for arms, equipments, &c., $.....100

Bounty paid $.....100; due $.....100

Remarks: Died July 20/65 Camp Nelson Ky. Genl Hospt Disease.

Book mark: Died July 21/65 E. B. V. II. P. 532

Galligan

(361) *Copyist.*

Thomas Lewis

D, Co. K, 13 Reg't Mass Vol

8 Enclosures.

Bed Cards	Descriptive Lists
Burial Records 1	Final Statements 1
Certs. of Dis. for Discharge	Furloughs
C. M. Charges	Med. Des. Lists
Med. Certificates	Orders

Other papers relating to—

Admission to Hosp'l	Furlough
Casualty Sheet (Officer's) 1	Med. Examination
Confinement	Misc. Information 1
Contracts	Pay or Clothing
Death or Effects 21	Personal Reports
Desertions	Rank
Discharge from Hosp'l	Transfer to Hosp'l
Discharge from Service	Transfer to V. R. C.
Duty	Transportation

INVENTORY OF THE EFFECTS of Lewis Thomas

Company "K" 13" Regiment U.S.C.T.

who died in the Helena General Hospital

July 2" 1863

Caps,		Blankets,	1
Dress Coats,		" Rubber	
Overcoats,		Knapsacks,	1
Jackets,		Canteens,	
Trowsers,		Haversacks,	1
Shirts,	1	Muskets,	
Drawers,	2	Bayonets,	
Boots, pairs,		Cartridge Box,	
Shoes, pairs,	1	Belt,	
Stockings,	1	Money,	

Inventory
of the effects of Lewis
Thomas
late of Co. "K" 13" Regiment
U.S.C.T. who died
at Helena General
Hospital July 2"
1863.

Jul
17
18, I

Nelson U. S. Army General Hospital,

Camp Nelson July 21" 1865.

Commanding Officer Company, "K"

13th Regt. U. S. Col'd Heavy Art'y

I have to inform you

that Lewis Thomas of your Company, died

in this Hospital on July 21"

of Typhoid Fever

I inclose ~~his descriptive list, with pay and clothing account, and~~ inventory of his effects.

Very respectfully yours, &c.,

No 2 in Roll

Daniel Morton

Surgeon U. S. V.

In charge of General Hospital.

CASUALTY SHEET

No. ....

Lewis Thomas

Sergeant of Company "K"

13" Regiment of U.S.C.H.A.

State Volunteers.

NATURE OF CASUALTY.

Died 1 July 1865.

CASUALTY SHEET.

Name: Lewis Thomas

Rank: Sergeant *Company:* "K" *Regiment:* 13"

Arm: Cav'd Hvy Artly. *State:* U.S.

Nature of Casualty: Death.

CAUSE OF CASUALTY—(NAME OF DISEASE, &C.)

Typhus Fever.

BY WHOM DISCHARGED.

DEGREE OF DISABILITY.

FROM WHAT SOURCE THIS INFORMATION WAS OBTAINED.

Gen. Return Cav'd Solds.
3d qr. 1865.

BY WHOM CERTIFIED.

Col. J. T. Foster.
Comdg Regt.

REMARKS.

DATE OF DISCHARGE, DEATH, &c.

July 21. 1865.

PLACE OF DISCHARGE, DEATH, &c.

Camp Nelson Ky.

A. J. Ball
Clerk.

(170)

Head Quarters Camp of Distribution,

(Late Convalescent Camp.)

CAMP NELSON, KY., ... 1864

To the Commanding Officer of

Co .....

Sir :

.....

of your company has been paid in this Camp by Major .....

Paymaster, U. S. A., for the months of .....

and has obtained the following articles of clothing, all which you are required to charge on your company rolls :

Hats.	Caps.	Pants	Dress Coats.	Overcoats.	Jackets.	Blouses.	Shirts.	Drawers.	Boots. pr.	Shoes, pr	Socks,	Blankets	Ponchas.	Knapsacks	Haversacks	Canteens.		TOTAL VALUE, $

Very Respectfully yours,

.....

Commandant of the Camp.

Lewis Thomas
Co "K" 13"
July 31. 1865.
Genl Supt: Camps Nelson, Ky.

RECORD OF DEATH AND INTERMENT

Name and number of person interred	Lewis Thomas
Number and locality of the grave	1263
Hospital number of the deceased	1720
Regiment rank and company	Pvt Co K 13th Regt Ind Heavy Artly.
Residence before enlistment	
Conjugal relation if married the residence of the widow	
Cause of death	Typhoid Fever
Age of the deceased	
Nativity	
References and remarks	
Date of death and burial	July 21st 1863

Memoranda

one Shirt
2 Drawers
1 Shoe
1 Sock
1 Blanket
1 Pantaloon
1 Overcoat
1 Knapsack

ARTICLES OF WAR.

ART. 95. When any non-commissioned officer or soldier shall die, or be killed in the service of the United States, the then commanding officer of the troop or company shall, in the presence of two other commissioned officers, take an account of what effects he died possessed of, above his arms and accoutrements, and transmit the same to the office of the Department of War, which said effects are to be accounted for, and paid to the representatives of such deceased non-commissioned officer or soldier. And in case any of the officers, so authorized to take care of the effects of deceased officers and soldiers, should, before they have accounted to their representatives for the same, have occasion to leave the regiment or post, by preferment or otherwise, they shall, before they be permitted to quit the same, deposit in the hands of the commanding officer, or of the assistant military agent, all the effects of such deceased non-commissioned officers and soldiers, in order that the same may be secured for, and paid to, their respective representatives.

ARMY REGULATIONS—EDITION OF 1863.

DECEASED SOLDIERS.

Par. 152. Inventories of the effects of deceased non-commissioned officers and soldiers, required by the 95th Article of War, will be forwarded to the Adjutant General, by the commander of the company to which the deceased belonged, and a duplicate of the same to the colonel of the regiment. Final statements of pay, clothing, &c., in duplicate, will be sent to the Adjutant General with one copy of the inventory. When a soldier dies at a post or station absent from his company, it will be the duty of his immediate commander to furnish the required inventory and final statements, and, at the same time, to forward to the commanding officer of the company to which the soldier belonged, a report of his death, specifying the date, place, and cause; to what time he was last paid, and the money or other effects in his possession at the time of his decease; which report will be noted on the next muster roll of the company to which the man belonged. Each inventory will be endorsed. "Inventory of the effects of ——— ———, late of company (—,) ——— regiment of ———, who died at ———, the —— day of ———, 186–." If a legal representative receive the effects, it will be stated in the report. If the soldier leave no effects, the fact will be reported.

Par. 153. Should the effects of a deceased non-commissioned officer or soldier not be administered upon within a short period after his decease, they shall be disposed of by a Council of Administration, under the authority of the commanding officer of the post, and the proceeds deposited with the Paymaster, to the credit of the United States, until they shall be claimed by the legal representatives of the deceased.

Par. 154. In all such cases of sales by the Council of Administration, a statement in detail, or account of the proceeds, duly certified by the Council and commanding officer, accompanied by the Paymaster's receipt for the proceeds, will be forwarded by the commanding officer to the Adjutant General. The statement will be endorsed, "Report of the proceeds of the effects of ——— ———, late of company (—,) ——— regiment of ———, who died at ———, the —— day of ———, 186–."

NOTE 1.—The effects in all cases, when called for, should be turned over to the legal representative, without further authority from the Adjutant General. When the effects are turned over to the relatives of the deceased before these inventories are sent to the Adjutant General, their receipts therefor should be attached to the inventories. In all other cases, one copy will be sent with a letter of transmittal direct to the Adjutant General, and a duplicate retained by the officer.

NOTE 2.—Particular care should be taken to take receipts in duplicate from the Paymaster for any funds turned over to him; one copy should be sent direct to the Adjutant General and one retained by the officer.

INVENTORY OF THE EFFECTS

OF

Sergt Lewis Thomas

Late of Company "K"

3d Reg't of U.S.C.H.A.

Volunteers, who died at Camp Nelson Ky

on the 21st day of July 1865.

Inventory of the effects of Lewis Thomas late a Scout of Captain E. C. Lewis Company K of the 13th Regiment of U.S.C.H.A. Volunteers, who was enrolled as a Private at Pikeston in the State of Kentucky on the 30th day of June 186 5, and mustered into the service of the United States as a Private on the 5th day of June 186 5, at Owensboro, Ky., in Company "F", 12th Regiment of U.S.C. Inf Volunteers, to serve 3 years or during the war; he was born in England in the State of Virginia; he was 25 years of age, 5 feet 7 inches high, Yellow complexion, Gray eyes, Black hair, and by occupation, when enrolled, a Laborer; he died in Hudson Sta Ky, at Camp Nelson Ky on the 21st day of July 1865, by reason of Typhoid Fever

INVENTORY.

Articles.	No.	Articles.	No.	Articles.	No.
Hats		Pairs trowsers		Knapsacks	1
Caps		Pairs flannel drawers		Poncho	1
Forage caps		Pairs cotton drawers	2		
Great coats		Flannel shirts	1		
Uniform coats		Cotton shirts			
Uniform jackets		Pairs boots			
Flannel sack coats		Pairs shoes	1		
Blouses		Pairs socks	1		
Stable frocks		Blankets	1	Money. Specie	$
Fatigue overalls		Haversacks	1	Notes	$

I CERTIFY, ON HONOR, that the above inventory comprises all the effects of Lewis Thomas deceased, and that the effects are in the hands of Lieut Dennis Preston at Nelson Sta Ky Camp Nelson Ky to be disposed of by a Council of Administration.

(DUPLICATES.)

E. C. Lewis.
Capt. Co. K, 13th U.S.C.H.A.
Commanding the Company.

STATION: Camp Nelson Ky

DATE: July 21st 1865

[A. G. O. No. 104.]

ARTICLES OF WAR.

ART. 95. When any non-commissioned officer or soldier shall die, or be killed in the service of the United States, the then commanding officer of the troop or company shall, in the presence of two other commissioned officers, take an account of what effects he died possessed of, above his arms and accoutrements, and transmit the same to the office of the Department of War, which said effects are to be accounted for, and paid to the representatives of such deceased non-commissioned officer or soldier. And in case any of the officers, so authorized to take care of the effects of deceased officers and soldiers, should, before they have accounted to their representatives for the same, have occasion to leave the regiment or post, by preferment or otherwise, they shall, before they be permitted to quit the same, deposit in the hands of the commanding officer, or of the assistant military agent, all the effects of such deceased non-commissioned officers and soldiers, in order that the same may be secured for, and paid to, their respective representatives.

DIRECTIONS.

NOTE 1.—One copy of the inventories of the effects of deceased non-commissioned officers and soldiers, required by the 95th Article of War, will be forwarded to the Adjutant General, by the commander of the company to which the deceased belonged, and a duplicate of the same to the colonel of the regiment. Final statements of pay, clothing, &c., in duplicate, will be sent to the Adjutant General with one copy of the inventory. Both inventory and final statements should be forwarded, as a general rule, through Regimental Headquarters. When a soldier dies at a post or station absent from his company, it will be the duty of his immediate commander to furnish, direct to the Adjutant General, the required inventory and final statements, and, at the same time, to forward to the commanding officer of the company to which the soldier belonged, a report of his death, specifying the date, place, and cause; to what time he was last paid, and the money or other effects in his possession at the time of his decease; which report will be noted on the next muster roll of the company to which the man belonged. Each inventory will be endorsed, "Inventory of the effects of — ——, late of company (—,) —— regiment of ——, who died at ——, the —— day of ——, 186—." If a legal representative receive the effects, it will be stated in the report. If the soldier leave no effects, the fact will be reported on the blank for inventory.

NOTE. 2.—Should the effects of a deceased non-commissioned officer or soldier not be administered upon within a short period after his decease, they shall be disposed of by a Council of Administration, under the authority of the commanding officer of the post, and the proceeds deposited with the Paymaster, to the credit of the United States, until they shall be claimed by the legal representatives of the deceased.

NOTE 3.—In all such cases of sales by the Council of Administration, a statement in detail, or account of the proceeds duly certified by the Council and commanding officer, (Form 5,) accompanied by the Paymaster's receipt for the proceeds, will be forwarded by the commanding officer to the Adjutant General. The statement will be endorsed, "Report of the proceeds of the effects of —— ——, late of company (—,) —— regiment of ——, who died at ——, the —— day of ——, 186—."

NOTE 4.—The effects in all cases, when called for, should be turned over to the legal representative, without further authority from the Adjutant General. When the effects are turned over to the relatives of the deceased before these inventories are sent to the Adjutant General, their receipts therefor should be attached to the inventories. In all other cases, one copy will be sent with a letter of transmittal direct to the Adjutant General, and a duplicate retained by the officer.

NOTE 5.—Particular care should be taken to take receipts in duplicate from the Paymaster for any funds turned over to him; one copy should be sent direct to the Adjutant General and one retained by the officer.

INVENTORY OF THE EFFECTS

OF

Pvt Lewis Thomas

Late of Company F

13th *Reg't of* *Cold Hy Arty*

Volunteers, who died at *Camp Nelson*

Ky.

on the *21st* *day of* *July* 186*5*.

Surgeon General's Office,

RECORD & PENSION BUREAU,

Washington D.C. Apr 17th 186*5*

The within Inventory is a true copy from the records of *Nelson Gen Hospital Camp Nelson Ky* *on file in this Office, and contains all the information in the case that can be found.*

BY ORDER OF THE SURGEON GENERAL:

J. J. Woodward

Bvt. Major, Assistant Surgeon, U. S. A.

U.S. OF A. 1936 No. H VOL.

Inventory of the effects of Lewis Thomas late
a Private of Captain _____ Company H of
the 13" Regiment of Cold Hy Cavly Volunteers, who was ~~enrolled~~ as
a _____ at _____ in the State of _____ on
the _____ day of _____ 186 , and mustered into the service of the United
States as a _____ on the _____ day of _____ 186 , at _____
in Company _____, _____ Regiment of _____ Volunteers, to serve _____
years or during the war; he was born in _____ in the State
of _____; he was _____ years of age, _____ feet _____ inches
high, _____ complexion, _____ eyes, _____ hair, and by occupation, when enrolled,
a _____; he died in Nelson G. Hospital, at
Camp Nelson Ky, on the 21st day of July 1865, by
reason of Typhoid Fever.

INVENTORY.

Articles.	No.	Articles.	No.	Articles.	No.
Hats		Pairs trowsers		Knapsacks	1
Caps		Pairs flannel drawers		Ponchos	1
Forage Caps		Pairs ~~cotton~~ drawers	2		
Great coats		Flannel shirts			
Uniform coats		~~Cotton~~ shirts	1		
Uniform jackets		Pairs boots			
Flannel sack coats		Pairs shoes	1		
Blouses		Pairs socks	1		
Stable frocks		Blankets	1		
Fatigue overalls		Haversacks	1		

Money.		
	Specie	$ ____
	Notes	$ ____

I CERTIFY, ON HONOR, that the above inventory comprises all the effects of _____, deceased, and that the ~~effects~~ are in the hands of _____ ~~at~~ _____ to be disposed of by a Council of Administration.

_____

(DUPLICATES.)

_____

_____

Commanding the Company.

STATION: _____

DATE: _____

[A. G. O. No. 104.]

Surgeon General's Office,
Rec. and Rep. Div.,
Washington, Sept. 7, 1887.

Respectfully forwarded to the Adjutant General.

The original application for final papers, in this case, has been mislaid.

This office has no records of the death of the soldier described within.

An Inventory of Effects can be furnished by Bvt. Lieut. Lewis Thomas, Co. "K" 13th U.S.C.T. U.S.A., who died at Camp Nelson, Ky. Aug 24, 1865.

By order of the Surgeon General

J. H. Woodward

Asst Surgeon U.S.A.

GENERAL'S OFFICE RECEIVED SEP 10 1887 U.S.

273 7

BW

Surgeon General's Office

Washington City, December 7th 1867.

General Lew

Wallace

13th U. S. C. T.

Application from A. C. G. for Discharge

of 2nd Lieut Third Colored

Raised Illinois 16th 1864

Surgeon General's Office.

Record and Pension Division,

13 Arty — Apr 17", 1867.

Respectfully returned to Assistant Adjutant General F. W. Taggart

A. G. O., with an Inventory of Effects enclosed, in case of Private Lewis Thomas Co H 13th Cold Hy Arty

(supposed to be the soldier referred to within).

No evidence on file from which Final Statements can be prepared. ———

By Order of the Surgeon General:

J. J. Woodward

Brevet Major and Assistant Surgeon, U. S. Army.

R. of A., Vol. 7 No. 473 J.P. J.E.S.

R.G.F.A.
No. 473
VOL. 7

WAR DEPARTMENT,

ADJUTANT GENERAL'S OFFICE,

WASHINGTON, Oct 11th, 1865.

SIR:

Final Statements in the cases of deceased soldiers are required to be sent to the Adjutant General's Office in duplicate, with one copy of the Inventory of Effects. The Descriptive List should also be sent to this Office in cases where the soldier was absent from his Company at the time of his death. Where there were no effects, it should be so stated on a blank Inventory, properly signed.

Certificates of Disability should be sent in duplicate. Special care should be taken that the date of discharge and signature of the discharging officer should be affixed.

No. ~~of the~~ Final Statement ~~of~~ Inventory, has been received in the case of Phillip Thomas, of Co. K, 13th Regiment of N. Hampshire Volunteers, whose papers were forwarded to this Office. You will please forward the missing papers without delay.

I have the honor to be, sir,

Very respectfully,

Your obedient servant,

E. D. Townsend

Assistant Adjutant General.

(110)

COMMANDING OFFICER

13th N.H. Vol.

Camp Stoneman

Washington D.C.

Care of Maj. Gen. Augur

Commanding Dept.

13th N.H. Vol.

[OFFICE ENDORSEMENT.]

War Department,

ADJUTANT GENERAL'S OFFICE,

January 18, 1876.

The Death of Lewis Thomas Sergeant, Co. "K", 13th Reg't U.S. Colored Inf'y, is reported as follows:

On Company Muster Roll.

For None due, 186 , date ....., 186

Company Muster-out Roll.

July 20th, 1865

Company Descriptive Book.

....., 186

Company Morning Reports.

....., 186

Soldier's Final Statement.

July 21st, 1865

Soldier's Record of Death and Interment.

....., 186

Soldier's Inventory of Effects. Sent herewith

July 21st, from Surgeon's office, 1865

Soldier's Certificate of Disability for Discharge.

There is no man of the above name, 186 on Roll of Co. 13th U.S.C.T.

Soldier's Individual Muster-out Roll.

....., 186

Regimental Return.

For ....., 186 , ..., 186

Regimental Quarterly Returns.

....., 186

Regimental Descriptive Book.

....., 186

By Surgeon General.

(.....) ....., 186

July 21, 1865, *is held to be the correct date, and the Company Muster Out Roll will be amended accordingly.*

Thomas M. Vincent
A.A.G. Asst Adjutant General.

Sold
C.S. 332
Note on R. & B. Dec. 5. 1876.

Duplicate with Inventory sent 2d Auditor.

FINAL STATEMENT

OF

Sergt Lewis Thomas

13th Reg't of Col'd Inf'y.

VOLUNTEERS.

Died July 21 1865

NOTE 1.—*Two* of these certificates (or duplicates) are to be given to each Volunteer Soldier or drafted man who may be discharged without being mustered out (Final Statements are never given to men mustered out of service,) that he may at once receive from the Paymaster the pay, &c., due him, and the captain or other COMMISSIONED officer commanding the company will certify to the act of the delivery of the duplicate certificates; with these certificates the Soldier is "entitled to" his *discharge*, and should also present his discharge to the Paymaster to have the payment endorsed on it. The discharge is to be given back to the Soldier by the Paymaster; the latter only retaining as his vouchers the duplicate certificates.

NOTE 2.—If the Soldier is entitled to pay for the use of his horse, the Company Commander will certify to that fact on the back of both these final statements, and also to the time he has pay due for having been so mounted on his own horse.

NOTE 3.—When a Soldier is furnished with final statements, his descriptive list, if he has one, should be taken up by the officer who gives the Soldier these statements, and endorsed with a statement to this effect by the officer. The endorsement should exhibit a full statement of the time for which the Soldier was allowed pay on his final statements, the clothing account, and all other charges against him or in his favor, so as to comprise a complete exhibit of his account. It will then be transmitted to the Company Commander of the Soldier, who will enter all the data necessary to a full understanding of the Soldier's account on the muster roll upon which the Soldier's discharge is reported. The descriptive list will then be destroyed. The object of this is, that the remaining portion of the Soldier's account may be settled upon the receipt of these muster rolls, and the Soldier receive any pay or allowances that may be due him at the time of his discharge, and which may not appear on his last final statements from the fact that his descriptive list is incomplete. These accounts for back pay, &c., are settled by the 2d Auditor of the Treasury Department.

NOTE 4.—Charges for loss or injury to ordnance, horse equipments, and other miscellaneous charges, should appear under the heading of "Other Stoppages."

NOTE 5.—Bounty paid by State authorities, and not by the United States, will not be entered on this statement.

NOTE 6.—Amounts due the Sutler and Laundress must be entered on the muster roll on which the discharge, death, desertion, &c., is reported, as well as on the final statement, otherwise the amount cannot be collected from the United States.

NOTE 7.—This blank will be used for deceased volunteers and drafted men, as well as for others.

NOTE 8.—Where a Soldier dies in Hospital or on detached service, his descriptive list, if he has one, should be sent with his final statements, in duplicate, to the Adjutant General, Washington, D. C.

NOTE 9.—If the soldier is a drafted man or substitute, the space for time, &c., of enrolled, should contain only the word *drafted* or *substitute*, as the case may be. If the Soldier is a "VETERAN," (or RECRUIT,) the words *as a veteran*, (or *recruit*,) as the case may be, should be interlined after the words *mustered into the service of the U. S.* A statement of all the installments of *Veteran* or *Recruit Bounty* RECEIVED by the Soldier must be made on the back of each final statement.

RECEIVED SEPT 2 1865 ADJUTANT GEN'LS OFFICE

A.G.O. July 20th 1876
A.G.M. Asst Q.r Master
Value $ 5.05/100 Dept. of the S.
Fla.

Extract from Act of Congress.

SEC. 12. *And be it further enacted*, That the fees of agents and attorneys for making out and causing to be executed the papers necessary to establish a claim for a pension, bounty, and other allowance before the Pension Office, under this act, shall not exceed the following rates: For making out and causing to be duly executed a declaration by the applicant with the necessary affidavits, and forwarding the same to the Pension Office, with the requisite correspondence, ten dollars; which sum shall be received by such agent or attorney in full for all services in obtaining such pension, and shall not be demanded or received, in whole or in part, until such pension shall be obtained; and the sixth and seventh sections of an act entitled "An act to grant pensions," approved July [fourteenth,] eighteen hundred and sixty-two, are hereby repealed.

SEC. 13. *And be it further enacted*, That any agent or attorney who shall, directly or indirectly, demand or receive any greater compensation for his services under this act than is prescribed in the preceding section of this act, or who shall contract or agree to prosecute any claim for a pension, bounty, or other allowance under this act, on the condition that he shall receive a per centum upon any portion of the amount of such claim, or who shall wrongfully withhold from a pensioner or other claimant the whole or any part of the pension or claim allowed and due to such pensioner or claimant, shall be deemed guilty of a high misdemeanor, and, upon conviction thereof, shall, for every such offense, be fined not exceeding three hundred dollars, or imprisoned at hard labor not exceeding two years, or both, according to the circumstances and aggravations of the offense.

Approved July 4, 1864.

NOTE 10.—If any soldier is charged a higher fee than that allowed by the above act, he should report the fact and the name of the agent to the Adjutant General, in order that steps may be taken to have the same refunded.

Copy. Col. S. Lee,
Sum of proth. and 2 Cert.
A.G.O. Nov 21st 1865
Invoice Ans R. M. report for effects
Value $ 6.25/100 sent 2d Auditor
C.

ADJUTANT GENERAL'S OFFICE.
Sept 2. 1865.
Duplicate with Inventory sent 2d Auditor.

FINAL STATEMENT

OF

Sergt Lewis Stone.
Co. E Reg't of Mass. C. H. A.

VOLUNTEERS.

Ans Dud July 21 1865

NOTE 1.—*Two* of these certificates (or duplicates) are to be given to each Volunteer Soldier or drafted man who may be discharged without being mustered out (Final Statements are never given to men mustered out of service,) that he may at once receive from the Paymaster the pay, &c., due him, and the captain or other COMMISSIONED officer commanding the company will certify to the act of the delivery of the duplicate certificates; with these certificates the Soldier is "entitled to" his *discharge*, and should also present his discharge to the Paymaster to have the payment endorsed on it. The discharge is to be given back to the Soldier by the Paymaster; the latter only retaining as his vouchers the duplicate certificates.

NOTE 2.—If the Soldier is entitled to pay for the use of his horse, the Company Commander will certify to that fact on the back of both these final statements, and also to the time he has pay due for having been so mounted on his own horse.

NOTE 3.—When a Soldier is furnished with final statements, his descriptive list, if he has one, should be taken up by the officer who gives the Soldier these statements, and endorsed with a statement to this effect by the officer. The endorsement should exhibit a full statement of the time for which the Soldier was allowed pay on his final statements, the clothing account, and all other charges against him or in his favor, so as to comprise a complete exhibit of his account. It will then be transmitted to the Company Commander of the Soldier, who will enter all the data necessary to a full understanding of the Soldier's account on the muster roll upon which the Soldier's discharge is reported. The descriptive list will then be destroyed. The object of this is, that the remaining portion of the Soldier's account may be settled upon the receipt of these muster rolls, and the Soldier receive any pay or allowances that may be due him at the time of his discharge, and which may not appear on his last final statements from the fact that his descriptive list is incomplete. These accounts for back pay, &c., are settled by the 2d Auditor of the Treasury Department.

NOTE 4.—Charges for loss or injury to ordnance, horse equipments, and other miscellaneous charges, should appear under the heading of "Other Stoppages."

NOTE 5.—Bounty paid by State authorities, and not by the United States, will not be entered on this statement.

NOTE 6.—Amounts due the Sutler and Laundress must be entered on the muster roll on which the discharge, death, desertion, &c., is reported, as well as on the final statement, otherwise the amount cannot be collected from the United States.

NOTE 7.—This blank will be used for deceased volunteers and drafted men, as well as for others.

NOTE 8.—Where a Soldier dies in Hospital or on detached service, his descriptive list, if he has one, should be sent with his final statements, in duplicate, to the Adjutant General, Washington, D. C.

NOTE 9.—If the soldier is a drafted man or substitute, the space for time, &c., of enrolled, should contain only the word *drafted* or *substitute*, as the case may be. If the Soldier is a "VETERAN," (or RECRUIT,) the words *as a veteran*, (or *recruit*,) as the case may be, should be interlined after the words *mustered into the service of the U. S.* A statement of all the installments of *Veteran* or *Recruit Bounty* RECEIVED by the Soldier must be made on the back of each final statement.

RECEIVED SEPT 2 1865 ADJUTANT GEN'S OFFICE

A.G.O. Feby 20th 1866
A. G. M. report for Effects
Value $ 5.03/100 sent 2d Aud. Feb 5.
FH.

I certify, on honor, that Lewis Thomas, a Negro of Captain E. L. Lewis Company (C) of the 13th Regiment of U.S.C.H.A VOLUNTEERS, of the State of _____, born in Fayette Co, State of Virginia, aged 25 years; 5 feet 7 inches high, Yellow complexion, Grey eyes, Black hair, and by occupation a Laborer, who joined for service and was enrolled (see Note 9) on the 25th day of June, 1863, at Wheeling by Capt Clapp, for the period of 3 years, and mustered into the service of the United States on the 5th day of June, 1863, at Camp Pierpont by Capt Clapp; and having served HONESTLY and FAITHFULLY with his Company to the present date, is now entitled to a DISCHARGE by reason of Death.

The said Lewis Thomas was last paid by Paymaster Lieut Paul, to include the _____ day of _____, 186 , and has pay due him from that time to the present date; he is entitled to pay and subsistence for TRAVELING to place of enrollment, and whatever other allowances are authorized to volunteer soldiers, drafted men, or militia, so discharged. He has received from the United States CLOTHING amounting to 34 50/100 dollars, since the _____ day of Enlistment, 186 , when his clothing account was last settled. He has received from the United States _____/100 dollars advanced BOUNTY.

There is to be stopped from him, on account of the State of _____, or other authorities, for CLOTHING, &c., received on entering service, _____/100 dollars; and for other stoppages, viz: _____

_____

_____/100 dollars.

He has been furnished with TRANSPORTATION in kind from the place of his discharge to _____; and he has been SUBSISTED for TRAVELING to his place of enrollment, up to the _____, 186 .

He is indebted to _____, SUTLER, _____/100 dollars.

He is indebted to _____, LAUNDRESS, _____/100 dollars.

Given in Duplicate, at Camp Chelsea Ky, this 21st day of June, 1865.

E. L. Lewis
Capt Co C 13th U.S.C.H.A.

Commanding Company.

[A. G. O. No. 95—First.]

2049

Thomas. Marcus

Co. E, 13 U.S. Col'd H. Art'y.

Private	Private

CARD NUMBERS.

1	55 1821 8	26	
2	55 1797 5	27	
3	55 2490 5	28	
4	55 2[illegible]040	29	
5	91293.73	30	
6		31	
7		32	
8		33	
9		34	
10		35	
11		36	
12		37	
12		38	
14		39	
15		40	
16		41	
17		42	
18		43	
19		44	
20		45	
21		46	
22		47	
23		48	
24		49	
25		50	

Book Mark:

See also Co G. 12 U.S. Col'd Inf.

F | 13 H. Art'y. | U.S.C.T.

Marcus Thomas

....., Co. K, 13 Reg't U. S. Col'd H. Art'y.

Appears on

Company Descriptive Book

of the organization named above.

DESCRIPTION.

Age 16 years; height 5 feet 11 inches.

Complexion Blk

Eyes Blk; hair Blk

Where born Montgomery Co Ky

Occupation Laborer

ENLISTMENT.

When May 26, 1865.

Where Maysville Ky

By whom Capt Knapp, term 3 y'rs.

Remarks:

E O'Pascomlee

(383*g*) Copyist.

C 7 | 13 H. Art'y. | U.S.C.T.

Marcus Thomas

Sgt., Co. K, 13 Reg't U. S. Col'd H. Art'y.

Appears on

M. and D. Roll of Men Transferred

to the organization named above,

from Co G 121

Roll dated Camp Nelson Ky June 23, 1865.

When enlisted Mch 26, 1865.

Period for which enlisted 3 years.

When mustered in June 10, 1865.

Present or absent Not stated

Company to which assigned

Remarks:

Book mark:

P C Slater

(342) *Copyist.*

G | 13 H. Art'y. | U.S.C.T.

Marcus Thomas

Pvt., Co. ....., 13 Reg't U. S. Col'd H. Art'y.

Appears on

M. and D. Roll of Men Transferred

to the organization named above,

from Co....., 121 Reg't U. S. Colored Infantry.

Roll dated June 23, 1865

When enlisted May 26, 1865

Period for which enlisted 3 years.

When mustered in June 10, 1865

Present or absent Not stated.

Company to which assigned K

Remarks: Credited to Madi-
son Co. 8 D. Ky.

Book mark :

C. Williams,

 Copyist.

F | 13 H. Art'y. | U.S.C.T.

Marcus Thomas

Pvt., Co. K., 13 Reg't U. S. Col'd H. Art'y.

Age ..... years.

Appears on

Company Muster Roll*

for June 30, 1865.

Joined for duty and enrolled:

When May 26, 1865.

Where Maysville Ky.

Period 3 years

Mustered in: FROM SECOND AUDITOR'S ROLL.

NEXT ROLL ON FILE MUSTER OUT.

When June 10, 1865.

Where Greensburg Ky.

Present or absent Present

Stoppage, $ 100 for .....

Due Gov't, $ 100 for .....

Valuation of horse, $ 100

Valuation of horse equipments, $ 100

Remarks: Transferred from 121 N. S. C. I.

* First current roll. No muster-in roll of this company on file.

Book mark: .....

Galligan

(3586) Copyist.

F | **13** H. Art'y. | **U.S.C.T.**

Marcus Thomas

Pvt, Co. K, 13 Reg't U. S. Col'd H. Art'y.

Appears on **Co. Muster-out Roll,** dated Louisville Ky., Nov. 18, 1865.

Muster-out to date Nov. 18, 1865.

Last paid to June 30 1865.

Clothing account:

Last settled ....., 186 ; drawn since $ 100

Due soldier $ ..... 100; due U. S. $ 39 27/100

Am't for cloth'g in kind or money adv'd $ 100

Due U. S. for arms, equipments, &c., $ 100

Bounty paid $ ..... 100; due $ 100

Remarks: .....

Book mark: .....

Galligan

(361) *Copyist.*

2050

Thomas Philips

Co D, 13 U.S.Col'd H. Art'y.

Private	Private

CARD NUMBERS.

1	5-5-17270	26	
2	5-5-15926	27	
3	5-5-15-983	28	
4	5-5-22215	29	
5	5-5-22534	30	
6	9128613	31	
7		32	
8		33	
9		34	
10		35	
11		36	
12		37	
13		38	
14		39	
15		40	
16		41	
17		42	
18		43	
19		44	
20		45	
21		46	
22		47	
23		48	
24		49	
25		50	

Book Mark:

See also

1 | 13 H. Arty | **U.S.C.T.**

Philip Thomas

....., Co. D, 13 Reg't U. S. Col'd H. Arty

Appears on

Company Descriptive Book

of the organization named above.

DESCRIPTION.

Age 20 years; height 5 feet 5½ inches.

Complexion Dk.

Eyes Dk; hair Blk

Where born Virginia

Occupation Farmer

ENLISTMENT.

When March 13, 1865.

Where Alton Ill

By whom Capt Collins; term 1 y'rs.

Remarks: Died

Deadrun

(383g) Copyist.

E | 13 H. Art'y. | U.S.C.T.

Philip Thomas

Appears with rank of Pvt on

Muster and Descriptive Roll of a Detachment of U. S. Vols. ~~forwarded~~ organized

for the 13 Reg't U. S. Col'd H. Art'y. Roll dated

Nov Noted, , 186 .

Where born Virginia

Age 20 y'rs; occupation Farmer

When enlisted Mar 13, 1865.

Where enlisted Alton, Ill

For what period enlisted 1 years.

Eyes Blk; hair Blk

Complexion Blk; height 5 ft. 5 1/2 in.

When mustered in Mar 13, 1865.

Where mustered in Alton, Ill.

Bounty paid $ 100; due $ 100 00/100

Where credited 12 Cong. Dist. Ill.

Company to which assigned K

Remarks: Died April 21st 1865

Book mark:

(339) Copyist.

9 | 13 N Arty | U.S.C.T.

Phillip Thomas

Appears with rank of Pvt on

Muster and Descriptive Roll of a Detachment of U. S. Vols. forwarded

for the 13 Reg't U. S. Col'd N Arty Roll dated

Alton Ill, Mch 14, 1865.

Where born Va

Age 20 y'rs; occupation Farmer

When enlisted Mch 13, 1865.

Where enlisted Alton Ill

For what period enlisted 1 years.

Eyes blk; hair blk

Complexion blk, height 5 ft. 5½ in.

When mustered in Mch 13, 1865.

Where mustered in Alton Ill

Bounty paid $ 100; due $ 100 100

Where credited Monticello Madison Co Ill
12 Cong Dist

Company to which assigned

Remarks:

Book mark:

Rose

(339) *Copyist.*

F | 13 H. Art'y. | U.S.C.T.

Philip Thomas

Appears with rank of Pvt on

Muster and Descriptive Roll of a Detachment of U. S. Vols. forwarded

for the 13 Reg't U. S. Col'd H. Art'y. Roll dated

Camp Butler Ill, Mch 23, 1865.

Where born Va

Age 20 y'rs; occupation Farmer

When enlisted Mch 13, 1865.

Where enlisted Alton Ill

For what period enlisted 1 years.

Eyes Blk; hair Blk

Complexion Blk; height 5 ft. 5½ in.

When mustered in Mch 13, 1865.

Where mustered in Alton Ill

Bounty paid $ 100; due $ 100 100

Where credited Monticella Madison Co Ill
12 Dist 4 Sub D.

Company to which assigned

Remarks:

Book mark:

Rose

(339) *Copyist.*

5 | 13 H. Art'y. | U.S.C.T.

Pvt. Edward Lawrence

Co. D, 13 Reg't U. S. Col'd H. Art'y.

Age ..... years.

Appears on

Company Muster Roll*

for Feb & Apr 30, 1865.

Joined for duty and enrolled:

When Jan 13, 1865.

Where Alton Jail

Period 1 years

Mustered in:

When March 13, 186 .

Where Alton

Present or absent.....

Stoppage, $.....100 for .....

Due Gov't, $.....100 for.....

Valuation of horse, $.....100

Valuation of horse equipments, $.....100

Remarks: Died in hosp at Smithland Ky Apr 21st 1865

* First current roll. **No muster-in roll of this company on file.**

Book mark: .....

Pegler

Copyist.

F | **13** H. Art'y. | **U.S.C.T.**

Philip Thomas

Pvt., Co. D, 13 Reg't U. S. Col'd H. Art'y.

Appears on **Co. Muster-out Roll,** dated Louisville Ky., Nov 18, 1865.

Muster-out to date ....., 186 .

Last paid to Pay due from enlistment, 186 .

Clothing account:

Last settled ....., 186 ; drawn since $.....100

Due soldier $.....100; due U. S. $.....100

Am't for cloth'g in kind or money adv'd $.....100

Due U. S. for arms, equipments, &c., $.....100

Bounty paid $.....100; due $.....100

Remarks: Died in Post Hospital Smithland Ky Small Pox April 21/65

Book mark: .....

---

(361) Copyist.

Thomas. Philip

L, Co. D; 13 U.S.C.H.A. Reg't

3 Enclosures.

Bed Cards	Descriptive Lists
Burial Records	Final Statements
Certs. of Dis. for Discharge	Furloughs
C. M. Charges	Med. Des. Lists
Med. Certificates	Orders

Enlistments 1

Other papers relating to—

Admission to Hosp'l Pay	Furlough
Casualty Sheet (~~Officer's~~) 1	Med. Examination
Confinement	Misc. Information 1
Contracts	Pay or Clothing
Death or Effects	Personal Reports
Desertions	Rank
Discharge from Hosp'l	Transfer to Hosp'l
Discharge from Service	Transfer to V. R. C.
Duty	Transportation

DECLARATION OF RECRUIT.

I, Phillip Thomas, desiring

VOLUNTEER as a Soldier in the Army of the United States, for the term of THREE YEARS,

Do Declare, That I am twenty years and ..... months

of age; that I have never been discharged from the United States service on account of disability or by sentence of a court martial, or by order before the expiration of a term of enlistment; and I know of no impediment to my serving honestly and faithfully as a soldier for three years.

GIVEN at Allen Les

the 13 day of March 1865

Witness: F. A. Brandal

Phillip X Thomas
mark

No. Phillip Thomas

Volunteered at Allen Les

on the 13 *day of* March, 1865,

for Three Years

By Lieut Allen Les

to serve in Capt Phillips *Regiment of* Allen Les

enlistment; last served in Company ( )

Reg't of

Discharged 18 .

Enlisted March 13th 1865
Allen Les
Lieutenant

13" U. S. C. Hy.

CONSENT IN CASE OF MINOR.

I, ..., DO CERTIFY, That I am

the ..... of .....; that the

said ..... is ..... years of age; and I do hereby freely give my CONSENT to his volunteering as a SOLDIER in the ARMY OF THE UNITED STATES for the period of THREE YEARS.

GIVEN at .....

the ..... day of .....

Witness:

.....

.....

.....

(A. G. O. No. 74 & 76.)

NOTE 1.—This blank will be used for both enlistments and re-enlistments—enlistment of veterans, &c., in the volunteer service. They will be made out in duplicate in all cases—one to accompany the recruiting return of the superintendent (not the recruiting officer) to the Adjutant General, and one to accompany the accounts of the officer who pays bounty, &c. The Regiment and Company in which the soldier last served should be given on the back.

NOTE 2.—An enlistment holds to service. A muster-in must, in all cases, precede payment of pay, bounty, pension, &c. A muster-in roll must, in all cases, be filed in the Adjutant General's Office as evidence of muster-in. The mustering officer, commissary, or assistant commissary of musters, as the case may be, will countersign both enlistments as having mustered the soldier into the service of the United States before either of them is given to the disbursing officer

VOLUNTEER ENLISTMENT.

STATE OF Illinois TOWN OF Alton

I, Phillip Thomas, born in ....., in the State of ....., aged Twenty years, and by occupation a Farmer Do HEREBY ACKNOWLEDGE to have volunteered this Nineteenth day of March, 1865, to serve as a ***Soldier*** in the **Army of the United States of America,** for the period of ~~*THREE*~~ *YEARS*, unless sooner discharged by proper authority: Do also agree to accept such bounty, pay, rations, and clothing, as are, or may be, established by law for volunteers. And I, Phillip Thomas, do solemnly swear, that I will bear true faith and allegiance to the ***United States of America,*** and that I will serve them honestly and faithfully against all their enemies or opposers whomsoever; and that I will observe and obey the orders of the President of the United States, and the orders of the officers appointed over me, according to the Rules and Articles of War.

Sworn and subscribed to, at Alton Ills this 17 day of March, 1865, BEFORE Inigo Collins Capt & P.M. 12th Dist Ills

his
Phillip X Thomas
mark

I CERTIFY, ON HONOR, That I have carefully examined the above-named Volunteer, agreeably to the General Regulations of the Army, and that, in my opinion, he is free from all bodily defects and mental infirmity, which would in any way disqualify him from performing the duties of a soldier.

J. H. Pierce
12th Dist Ills
EXAMINING SURGEON.

I CERTIFY, ON HONOR, That I have minutely inspected the Volunteer Phl Thomas previously to his enlistment, and that he was entirely sober when enlisted; that, to the best of my judgment and belief, he is of lawful age; and that, in accepting him as duly qualified to perform the duties of an able-bodied soldier, I have strictly observed the Regulations which govern the recruiting service. This soldier has Black *eyes*, Black *hair*, Black *complexion*, is 5 *feet* 3 5/8 *inches* high.

Inigo Collins
Capt & P.M. 12th Dist Ills
Regiment of ..... *Volunteers,*
RECRUITING OFFICER.

(A. G. O. No. 74 & 76.)

Certificate for the Signature of the Mustering Officer, Commissary, or Assistant Commissary of Musters, as the case may be.

Mustered into the service of the United States, for ~~three~~ years or during the war, from date of enlistment, in Co. 13 Regiment of Ills Volunteers, on the 17 day of March, 1865, at Alton Ills and credited to ..... Ward, (or Sub-district,) in the Town of ....., in the County of ....., ... th Congressional District, in the State of .....

Bounty paid at time of Muster-in:

U. S. Bounty, ...

Local Bounty, ...

Inigo Collins
Capt & P.M. 12th Dist Ills
12th Dist Ills

CASUALTY SHEET

No. Error as to date, Corrected,

Philip Thomas

Pvt of Company D

13 Regiment of U.S.C.C. (Ky)

State Volunteers

NATURE OF CASUALTY.

Died Oct 21. '65.

CASUALTY SHEET.

Name: Philip Thomas

Rank: Private *Company:* "K" *Regiment:* 13

Arm: U.S. Cavy (Hvy) *State:*

Nature of Casualty: Death

CAUSE OF CASUALTY—(NAME OF DISEASE, &C.)

Smallpox

DEGREE OF DISABILITY.

BY WHOM CERTIFIED.

Capt. Wm. H. Hopkins
Cmd'g Co

DATE OF DISCHARGE, DEATH, &C.

April 21. 1865

PLACE OF DISCHARGE, DEATH, &C.

Post Hospital
Smithland, Ky.

BY WHOM DISCHARGED.

FROM WHAT SOURCE THIS INFORMATION WAS OBTAINED.

Co. Muster Roll Apr. 30. 65.
and No Roll

REMARKS.

A. J. Ball
Clerk.

Surgeon General's Office,

Record and Pension Division,

13 Washington, Sept 5th, 1868.

Respectfully returned to the Adjutant General, U. S. Army, with certificate from records filed in this Office enclosed, in case of the soldier described within.

BY ORDER OF THE SURGEON GENERAL:

J. J. Woodward

Bvt. Lt. Col. and Asst. Surgeon, U. S. A.

(69)

J.S. R. of A., Vol. 4 No. 1418

RECEIVED SEPT 9 1868 SURGEON GENERAL'S OFFICE

RECEIVED ADJUTANT GENERALS SEP 10 1868 OFFICE.

R. of A. No. 1418 VOL. 4

Surgeon General's Office,

Record and Pension Division,

13 Washington, Sept. 5", 1868.

Respectfully returned to the Adjutant General, U. S. Army, with certificate from records filed in this Office enclosed, in case of the soldier described within.

BY ORDER OF THE SURGEON GENERAL:

J. J. Woodward

Bvt. Lt. Col. and Asst. Surgeon, U. S. A.

(69)

J. F. R. of A., Vol. 111 No. 1111

R. of A. No. 1418 Vol. 4

RECEIVED SEPT 9 1868 U.S.

RECEIVED ADJUTANT GENERALS SEP 10 1868 OFFICE.

WAR DEPARTMENT,

ADJUTANT GENERAL'S OFFICE,

WASHINGTON, August 14, 1868.

SIR:

Final Statements in the cases of deceased soldiers are required to be sent to the Adjutant General's Office in duplicate, with one copy of the Inventory of Effects. The Descriptive List should also be sent to this Office in cases where the soldier was absent from his Company at the time of his death. Where there were no effects, it should be so stated on a blank Inventory, properly signed.

Certificates of Disability should be sent in duplicate. Special care should be taken that the date of discharge and signature of the discharging officer should be affixed.

No ~~of the~~ Final Statement or Inventory, has been received in the case of Philip Thomas, Private, of Co. "K", 13" Regiment of U.S.Col'd Inf'y Volunteers, whose papers were forwarded to this Office. You will please forward the missing papers without delay.

I have the honor to be, sir,

Very respectfully,

Your obedient servant,

Hd. Qrs. April 21. '65.
Div. Dist. Hospitals
Louisville Ky.

Thos. M. Vincent

Assistant Adjutant General.

(110)

Bvt. Lieut. Col.

~~COMMANDING OFFICER~~

J. J. Woodward
Asst. Surg. U.S. Army.

A.A.G.

Pension Number.....

R. of.....A., Vol 14 No 1418

WAR DEPARTMENT,

Surgeon General's Office,

RECORD AND PENSION DIVISION,

Washington, D. C., September 1, 1868.

[CERTIFICATE FROM RECORDS.]

It appears, from the records filed in this Office, that .....

.....Co....., ...Reg't .....Vol.....

was admitted to ..... Hospital, ...

....., 186 , from .....for treatment for

.....

.....

.....

.....

It also appears, as reported by.....Surgeon .....

....., that Pvt. Philip Thomas, Co. D,

13th Reg't U.S.C. Arty Vol., died April 21st, 1865, at

Rel- Richl, Smithland, Ky., of Small Pox.

.....

.....

Remarks: Records of the Hospl. do not cover date of death.

The desired final papers cannot be furnished by

this office.

BY ORDER OF THE SURGEON GENERAL:

P. J. Woodward

.....

Brev. Lieut. Col. and Asst. Surgeon, U. S. Army.

(64)

(NOTE. This certificate should not be detached from the accompanying papers.)

2057

Thomas. Richard

Co. I, 13 U.S.Col'd H. Art'y.

Pvate | Pvate

CARD NUMBERS.

1	55 18693	26	
2	55 17964	27	
3	55 24429	28	
4	55 24586	29	
5	55 24736	30	
6	91 29810	31	
7		32	
8		33	
9		34	
10		35	
11		36	
12		37	
13		38	
14		39	
15		40	
16		41	
17		42	
18		43	
19		44	
20		45	
21		46	
22		47	
23		48	
24		49	
25		50	

Book Mark:

See also Ltr E 121. 1886 Inf

S-1658716 D.Others

P.P. 658740

D 2103819 Dorf

S-2127985- P.O. Retd.

D. 2298867 Portch.

a H 201 (1-9-36)

J. J. Townsend Exr

I | 13 H. Art'y. | U.S.C.T.

Richard Thomas

....., Co. C, 13 Reg't U.S. Col'd H. Art'y.

Appears on

Company Descriptive Book

of the organization named above.

DESCRIPTION.

Age 25 years; height 6 feet 1½ inches.

Complexion Yellow

Eyes Hazle; hair Blk

Where born Bath Co. Ky

Occupation Laborer

ENLISTMENT.

When Oct 2, 1863.

Where Maysville Ky

By whom Capt Hart; term 3 y'rs.

Remarks: .....

E N Lescombe

(383*g*) **Copyist.**

I | 13 H. Art'y. | U.S.C.T.

Richard Thomas

I, Co. C, 13 Reg't U. S. Col'd H. Art'y.

Age ..... years.

Appears on

Company Muster Roll*

for June 30, 1865.

Joined for duty and enrolled:

When Oct. 2121, 1863.

Where Maysville Ky

Period 3 years

Mustered in:

When March 1, 1865.

Where Greenupsburg Ky

Present or absent Present

Stoppage, $ 100 for .....

Due Gov't, $ 100 for .....

Valuation of horse, $ 100

Valuation of horse equipments, $ 100

Remarks: Absent Sick in C. & G. H. Hosts

* First current roll. No muster-in roll of this company on file.

Book mark: .....

(3586) Copyist.

I | 13 H. Art'y. | U.S.C.T.

Richard Thomas

Pvt, Co. I, 13 Reg't U. S. Col'd H. Art'y.

Appears on

M. and D. Roll of Men Transferred

to the organization named above,

from Co E 121 U S C Inf

Roll dated Camp Nelson Ky June 23, 1865.

When enlisted 22 Apr, 1865.

Period for which enlisted 3 years.

When mustered in 4 May, 1865.

Present or absent not stated

Company to which assigned

Remarks: Credit to Both Co, 9 Dist Ky

Book mark :

D Muchemore

(342) *Copyist.*

G | 13 H. Art'y. | U.S.C.T.

Richard Thomas

Pvt., Co. ....., 13 Reg't U. S. Col'd H. Art'y.

Appears on

M. and D. Roll of Men Transferred

to the organization named above,

from Co....., 121 Reg't U. S. Colored Infantry.

Roll dated June 23, 1866.

When ~~enlisted~~ Nov. 22, 1865.

Period for which enlisted 3 years.

When mustered in May 4, 1865.

Present or absent Not stated

Company to which assigned I

Remarks: Credited to Balt

Co. 9 D. Ky.

C. Williams,
Copyist.

(342)

T | 13 H. Art'y. | U.S.C.T.

Richard Thomas

Pvt., Co. ....., 13 Reg't U. S. Col'd H. Art'y.

Appears on

M. and D. Roll of Men Transferred

to the organization named above,

from Co....., 121 Reg't U. S. Colored Infantry.

Roll dated June 23, 1866.

When ~~enlisted~~ Nov. 22, 1865.

Period for which enlisted 3 years.

When mustered in May 4, 1866.

Present or absent Not stated

Company to which assigned I

Remarks: Credited to Balt

Co. 9 D. Ky.

Book mark :

C. Williams,
Copyist.

(342)

(1) | 13 H. Art'y. | U.S.C.T.

Pvt. of Hunt

Pvt., Co. I, 13 Reg't U. S. Col'd H. Art'y.

Appears on

Company Muster Roll

for July & Aug., 1865.

Present or absent Present

Stoppage, $ 100 for

Due Gov't, $ 100 for

Valuation of horse, $ 100

Valuation of horse equipments, $ 100

Remarks:

NEXT ROLL ON FILE MUSTER OUT.

Book mark:

B. Fishoff

(358) *Copyist.*

A | 13 H. Art'y. | U.S.C.T.

Richard Thomas

P[illegible], Co. [illegible], 13 Reg't U. S. Col'd H. Art'y.

Appears on **Co. Muster-out Roll,** dated Louisville Ky., June 18, 1865.

Muster-out to date June 18, 1865.

Last paid to June 30, 1865.

Clothing account:

Last settled ....., 186 ; drawn since $.....100

Due soldier $.....100; due U. S. $ 29 00/100

Am't for cloth'g in kind or money adv'd $.....100

Due U. S. for arms, equipments, &c., $.....100

Bounty paid $ 100 00/100; due $.....100

Remarks:.....

Book mark: 1 Art. P. Dog. ??

(361) Copyist.

2052

Thomas Robert

Co a, 13 U.S.Col'd H. Art'y.

Private

CARD NUMBERS.

1	26
2	
3 See Tomms Robert	
4	29
5	30
6	31
7	32
8	33
9	34
10	35
11	36
12	37
13	38
14	39
15	40
16	41
17	42
18	43
19	44
20	45
21	46
22	47
23	48
24	49
25	50

Book Mark

See also

2033

Thomas Stephen

Co. I, 13 U.S.Col'd H. Art'y.

Private	Private

CARD NUMBERS.

1	5518699	26	
2	5.5 / 17970	27	
3	552443 5	28	
4	55 24589	29	
5	55 24742	30	
6	2129816	31	
7		32	
8		33	
9		34	
10		35	
11		36	
12		37	
13		38	
14		39	
15		40	
16		41	
17		42	
18		43	
19		44	
20		45	
21		46	
22		47	
23		48	
24		49	
25		50	

Book Mark:

See also Co D. 121. U.S.C.I. Inf.

E-930/39 Rumpf

D. Schmundt Esq

T

13 H. Art'y. | U.S.C.T.

Stephen Travis

....., Co. C, 13 Reg't U. S. Col'd H. Art'y.

Appears on

Company Descriptive Book

of the organization named above.

DESCRIPTION.

Age 28 years; height 5 feet 4 inches.

Complexion Dark

Eyes Dark; hair Dark

Where born Bracken Co. Ky

Occupation Laborer

ENLISTMENT.

When Jan 31, 1865.

Where Maysville Ky

By whom Lt Boyle; term 3 y'rs.

Remarks:

E N Spaconible

(383*g*) **Copyist.**

13 H. Art'y. | U.S.C.T.

Stephen Thomas

Co. C, 13 Reg't U. S. Col'd H. Art'y.

Age ..... years.

Appears on

Company Muster Roll*

for June 30, 1865.

Joined for duty and enrolled:

When Jan. 31, 1865.

Where Maysville Ky

Period 3 years

Mustered in:

When Feb. 9, 1865.

Where Greensburg Ky

Present or absent Present

Stoppage, $ 100 for .....

Due Gov't, $ 100 for .....

Valuation of horse, $ 100

Valuation of horse equipments, $ 100

Remarks: .....

* First current roll. No muster-in roll of this company on file.

Book mark: .....

(3586) *Copyist.*

J | 13 H. Art'y. | U.S.C.T.

Stephen Thomas

Pri, Co. I, 13 Reg't U. S. Col'd H. Art'y.

Appears on

M. and D. Roll of Men Transferred

to the organization named above,

from Co D 121 US C Inf

Roll dated Camp Nelson Ky June 23, 1865.

When enlisted 31 Jan, 1865.

Period for which enlisted 3 years.

When mustered in 9 Feb, 1865.

Present or absent not stated

Company to which assigned

Remarks: Credit to Bracken Co, 9 Dist Ky

Book mark :

S. Merchant

(342) *Copyist.*

D | 13 H. Art'y. | U.S.C.T.

Stephen Thomas

Pvt., Co. ....., 13 Reg't U. S. Col'd H. Art'y.

Appears on

M. and D. Roll of Men Transferred

to the organization named above,

from Co....., 12th Reg't U. S. Colored Infantry.

Roll dated ...June 23..., 1865.

When enlisted ...Jan'y 6th..., 1865.

Period for which enlisted ..... 3 ..... years.

When mustered in ...Feb'y 9..., 1865.

Present or absent ...Not stated...

Company to which assigned ...I...

Remarks: credited to Bracken Co. 6 D. Ky.

Book mark :

C Williams

Copyist.

(342)

A | 13 H. Art'y. | U.S.C.T.

Stephen Wilson

P. V., Co. I, 13 Reg't U. S. Col'd H. Art'y.

Appears on

Company Muster Roll

for Sept & Oct, 1865.

Present or absent Present

Stoppage, $ 100 for

Due Gov't, $ 100 for

Valuation of horse, $ 100

Valuation of horse equipments, $ 100

Remarks:

NEXT ROLL ON FILE MUSTER OUT.

Book mark:

B. Fisher

(358) *Copyist.*

Y \ | **13 H. Art'y.** | **U.S.C.T.**

Reuben Dennis

P1, Co. A, 13 Reg't U. S. Col'd H. Art'y.

Appears on **Co. Muster-out Roll,** dated Louisville Ky, Dec. 18, 1865.

Muster-out to date Dec. 18, 1865.

Last paid to June 30, 1865.

Clothing account:

Last settled ....., 186 ; drawn since $.....100

Due soldier $.....100; due U. S. $ Dft Pd 100

Am't for cloth'g in kind or money adv'd $.....100

Due U. S. for arms, equipments, &c., $.....100

Bounty paid $ 100 00/100; due $.....100

Remarks:.....

.....

.....

.....

.....

.....

Book mark:.....

B. F. Hall

(361) Copyist.

2054

Thomas. William

Co ....., 13 U.S.Col'd H. Art'y.

Private	Private

CARD NUMBERS.

1 55 17443	26
2 55 19459	27
3	28
4	29
5	30
6	31
7	32
8	33
9	34
10	35
11	36
12	37
13	38
14	39
15	40
16	41
17	42
18	43
19	44
20	45
21	46
22	47
23	48
24	49
25	50

Book Mark.....

See also.....

F | 13 Arty | U.S.C.T

William Thomas

Appears with rank of Private on

Muster and Descriptive Roll of a Detachment of Drafted Men and Substitutes forwarded

for the 13 Reg't U. S. Col'd Arty. Roll dated Camp Butler, Ill., May 6, 1865

Where born Miss.

Age 35 years; occupation Shoemaker

Drafted and mustered in:

When Mar. 9, 1865.

Where Chicago

Period 1 years.

Eyes Blk; hair Blk

Complexion Blk; height 5 ft. 7 in.

Paid bounty and advance pay, $ 100

Bounty due $ 100

Where credited Chicago, 1 Cong. 3 I. D. Ill.

Company to which assigned

Remarks:

Book mark: P.M.R. Feb. 9/64

W. S. Thompson

(340) Copyist.

F | 13 Kan | U.S.C.T.

William Thomas

Pvt., Co. ....., 13 Reg't U. S. Col'd Hv Arty

Appears on a

Detachment Muster-out Roll

of the organization named above. Roll dated

Springfield Ill., May 14 1865.

Muster-out to date May 14, 1865.

Last paid to Pay due from enlistment 186

Clothing account:

Last settled ....., 186 ; drawn since $..... 100

Due soldier $..... 100; due U. S. $..... 100

Am't for cloth'g in kind or money adv'd $ 37 29/100

Due U. S. for arms, equipments, &c., $..... 100

Bounty paid $..... 100 due $..... 100

Remarks: Due from U.S. Paymaster $150

Book mark: .....

Collings

(349) *Copyist.*

2055

Thomas Hillain

Co C, 13 U.S.Col'd H. Art'y.

Sergeant	Sergeant.

CARD NUMBERS

1	5-5-15-7755	26	
2	5-5-15-9254	27	
3	5-5-16771	28	
4	5-5-21430	29	
5	5-5-21579	30	
6	5-5-21759	31	
7	5-5-21908	32	
8	91284220	33	
9		34	
10		35	
11		36	
12		37	
13		38	
14		39	
15		40	
16		41	
17		42	
18		43	
19		44	
20		45	
21		46	
22		47	
23		48	
24		49	
25		50	

Book Mark:

See also

J | 13 H. Art'y. | U.S.C.T.

Lilian Thomas

....., Co. C, 13 Reg't U. S. Col'd H. Art'y.

Appears on

Company Descriptive Book

of the organization named above.

DESCRIPTION.

Age 22 years; height 5 feet ..... inches.

Complexion, Black

Eyes Black; hair Black

Where born Madison Alabama

Occupation Farmer

ENLISTMENT.

When Feb 15, 186 4.

Where Louisville Ky

By whom Capt Smith; term 3 y'rs.

Remarks: Promoted Sergeant Feb 18th 1863

Deserted

(383g) *Copyist.*

T | 13 H. Art'y. | U.S.C.T.

William Thomas

Appears with rank of Pvt on

Muster and Descriptive Roll of a Detachment of U. S. Vols. forwarded

for the 13 Reg't U. S. Col'd H. Art'y. Roll dated

Louisville, Ky, Feb. 18, 1865.

Where born Madison, Alabama

Age 22 y'rs; occupation Farmer

When enlisted Feb. 18, 1865.

Where enlisted Louisville, Ky

For what period enlisted 3 years.

Eyes Blk; hair Blk

Complexion Blk; height 6 ft. — in.

When mustered in Feb. 18, 1865.

Where mustered in Louisville, Ky

Bounty paid $ 100; due $ 100

Where credited Louisville, Jefferson Co. 5th Dist Ky

Company to which assigned C

Remarks:

Book mark:

Hammer

(339) *Copyist.*

D | **13** H. Art'y. | **U.S.C.T.**

William Thomas

Appears with rank of Pvt on

Muster and Descriptive Roll of a Detachment of U. S. Vols. forwarded

for the 13 Reg't U. S. Col'd H. Art'y. Roll dated

Draft Rendezvous, Mch 14, 1865.

Where born Louisville Ky By Madison Ala

Age 22 y'rs; occupation Farmer

When enlisted Feb 18, 1865.

Where enlisted Louisville Ky

For what period enlisted 3 years.

Eyes Black; hair Black

Complexion Black; height 6 ft. = in.

When mustered in Feb 18, 1865.

Where mustered in Louisville Ky

Bounty paid $ 100; due $ 100

Where credited 5th Dist Ky

Company to which assigned

Remarks:

Book mark:

Pvt 6

(339) *Copyist.*

I | 13 H. Art'y. | U.S.C.T.

Julius Thomas

Sergt, Co. C, 13 Reg't U. S. Col'd H. Art'y.

Age ..... years.

Appears on

Company Muster Roll*

for to Apr 30, 1865.

Joined for duty and enrolled:

When Feb 18, 1865.

Where Louisville Ky

Period 3 years

Mustered in:

When Feb 18, 1865.

Where Louisville Ky

Present or absent Present

Stoppage, $ 100 for .....

Due Gov't, $ 100 for .....

Valuation of horse, $ 100

Valuation of horse equipments, $ 100

Remarks: Appointed, Sergt. to date from Enlistment.

* First current roll. No muster-in roll of this company on file.

Book mark: .....

Van Houten.

(3586) Copyist.

G | 13 H. Art'y. | U.S.C.T.

William Thomas

Engl, Co. C, 13 Reg't U. S. Col'd H. Art'y.

Appears on

Company Muster Roll

for May & June, 186 5.

Present or absent Present

Stoppage, $ 100 for

Due Gov't, $ 100 for

Valuation of horse, $ 100

Valuation of horse equipments. $ 100

Remarks: Appointed from date of enlistment, No bounty rec'd, Due first installment bounty.

FROM SECOND AUDITOR'S ROLL.

Book mark:

Daniel Hudson

(858) Copyist.

13 H. Art'y. | U.S.C.T.

William Thomas

Appears with rank of Sgt. on

Muster and Descriptive Roll of a Detachment of U. S. Vols. ~~forwarded~~ organized

for the 13 Reg't U. S. Col'd H. Art'y. Roll dated

Camp Nelson, Ky, June 23, 1865.

Where born Madison, "

Age 22 y'rs; occupation Farmer

When enlisted Feb 18, 1865.

Where enlisted Louisville, Ky.

For what period enlisted 3 years.

Eyes Black; hair Black

Complexion Black, height 6 ft. in.

When mustered in Feb. 18, 1865.

Where mustered in Louisville

Bounty paid $ None 100; due $ 100

Where credited 5 Cong. Dist. Ky

Company to which assigned G

Remarks: Painter Sergt. from date of Enlistment

Book mark:

Blayler

(339) *Copyist.*

I | 13 H. Art'y. | U.S.C.T.

Sylvanus Howard

Sergt, Co. C, 13 Reg't U. S. Col'd H. Art'y.

Appears on

Company Muster Roll

for July & Aug, 1865.

Present or absent Present

Stoppage, $ 100 for

Due Gov't, $ 100 for

Valuation of horse, $ 100

Valuation of horse equipments. $ 100

Remarks: Appointed from date of Enlistment. Due first instalment bounty $100.00

NEXT ROLL ON FILE MUSTER OUT.

Book mark:

Van Houten

(358) *Copyist.*

D | **13 H. Art'y.** | **U.S.C.T.**

William Thomas

Pvt., Co. C, 13 Reg't U. S. Col'd H. Art'y.

Appears on **Co. Muster-out Roll,** dated

Louisville Ky, Mar 18, 186 5.

Muster-out to date Mar 18, 186 5.

Last paid to June 30, 186 5.

Clothing account:

Last settled ....., 186 ; drawn since $ 100

Due soldier $ 1 06/100; due U. S. $ 100

Am't for cloth'g in kind or money adv'd $ 100

Due U. S. for arms, equipments, &c., $ 100

Bounty paid $ 100 00/100; due $ 100

Remarks: Appt'd Sergt. Feb 18/65.
Due difference of pay
between private & Sergt.
from date of appointment
to June 23/65.

Book mark: .....

Van Houton.

(361) *Copyist.*

2056

Thomas. Wilkins

Co. F, 13 U.S. Col'd H. Art'y.

Private | Private

CARD NUMBERS.

1	5.5.17374	26	
2	5.5.17065	27	
3	5.5.23156	28	
4	5.5.23313	29	
5	912891 3	30	
6	2742 16 89	31	
7		32	
8		33	
9		34	
10		35	
11		36	
12		37	
13		38	
14		39	
15		40	
16		41	
17		42	
18		43	
19		44	
20		45	
21		46	
22		47	
23		48	
24		49	
25		50	

Book Mark:

See also

F | **13** H. Art'y. | **U.S.C.T.**

William Thomas

F

....., Co. ....., 13 Reg't U. S. Col'd H. Art'y.

Appears on

Company Descriptive Book

of the organization named above.

DESCRIPTION.

Age 34 years; height 5 feet 7 inches.

Complexion Blk

Eyes Blk; hair Blk

Where born Virginia

Occupation Laborer

ENLISTMENT.

When Apr 13, 1865.

Where Jacksonville, Ill.

By whom Capt Hamilton; term 1 y'rs.

Remarks:

Beck

(383*g*) **Copyist.**

I 13th Arty U.S.C.T.

William E Thomas

Appears with rank of ..... on

Muster and Descriptive Roll of a Detachment of Substitutes forwarded

for the 13 Reg't U.S. Colrd Arty. Roll dated

Jacksonville Ill. Apl. 14, 1865.

Where born Virginia.

Age 34 y'rs; occupation Laborer.

When enlisted Apl. 13, 1865.

Where enlisted Jacksonville, Ill.

For what period enlisted ..... years.

Eyes black; hair black

Complexion Colored height 5 ft. 4 in.

When mustered in Apl. 14 1865.

Where mustered in Jacksonville.

Bounty paid $ 100; due $ 100

Where credited Residence of Taylorville Ill.

Company to which assigned 26 Sub. Dist.

Remarks :

Jonathan Shivers

Mar. 30, 1865.

Book mark :

P Rankin

(340c) *Copyist*

I | 13 Arty | **U.S.C.T**

William Thomas

Appears with rank of Private on

Muster and Descriptive Roll of a Detachment of Drafted Men and Substitutes forwarded

for the 13 Reg't U.S. Col'd Arty Roll dated

Camp Butler, Ill, Apr 28, 1863

Where born Virginia

Age 34 years; occupation Laborer

Drafted and mustered in:

When Apr. 14, 1863.

Where Jacksonville

Period 3 years.

Eyes Blk; hair Blk

Complexion Colored; height 5 ft. 4 in.

Paid bounty and advance pay, $100

Bounty due $100

Where credited Taylorsville 10 Cong. Dist. Ill.

Company to which assigned

Remarks:

Book mark:

W. S. Thompson

(340) Copyist.

I 13th Kty U.S.C.T.

William Thomas

Appears with rank of Pvt on

Muster and Descriptive Roll of a Detachment of U. S. Vols. ~~forwarded~~ Organized

for the 13 Reg't U.S.C.T. Army Roll dated

Camp Nelson, Ky., June 23, 1865.

Where born Virginia

Age 34 y'rs; occupation Laborer

When enlisted Apr. 13, 1865.

Where enlisted Jacksonville, Ill.

For what period enlisted 1 years.

Eyes Blk; hair Blk,

Complexion Blk, ; height 5 ft. 4 in.

When mustered in Apr. 14, 1865.

Where mustered in Jacksonville

Bounty paid $ 100; due $ 100

Where credited Beloit, Ill.

Company to which assigned D

Remarks:

Book mark:

B Taylor

(339) Copyist.

D | 13 H. Art'y. | U.S.C.T.

William Thomas

Pvt., Co. D, 13 Reg't U. S. Col'd H. Art'y.

Age ..... years.

Appears on

Company Muster Roll*

for ..... to June 30, 1865.

Joined for duty and enrolled:

When ..... Apl 13, 1865.

Where ..... Jacksonville .....

Period ..... 1 years

Mustered in:

When ..... Apl 14, 1865.

Where Jacksonville

Present or absent ..... Present

Stoppage, $ ..... 100 for .....

Due Gov't, $ ..... 100 for .....

Valuation of horse, $ 100

Valuation of horse equipments, $ 100

Remarks: .....

NEXT ROLL ON FILE MUSTER OUT.

* First current roll. No muster-in roll of this company on file.

Book mark: .....

(3586) Copyist.

D | **13** H. Art'y. | **U.S.C.T.**

William Thomas

Pvt., Co. D, 13 Reg't U. S. Col'd H. Art'y.

Appears on **Co. Muster-out Roll,** dated Louisville Ky, Nov 1, 1865.

Muster-out to date Nov 1, 1865.

Last paid to June 30, 1865.

Clothing account:

Last settled ....., 186 ; drawn since $ 100

Due soldier $ ..... 100; due U. S. $ 19 20/100

Am't for cloth'g in kind or money adv'd $ 100

Due U. S. for arms, equipments, &c., $ 100

Bounty paid $ ..... 100; due $ 100

Remarks: Due from the U.S. $150.00 as per Check Book

Book mark: .....

(361) Copyist.

Thomas. William

P., Co. F., 132 I.S.C. Reg't H A

2 **Enclosures.**

Bed Cards	Final Statements
Burial Records	Furloughs or L. of A.
Certs. of Dis. for Discharge	Med. Certificates
C. M. Charges	Med. Des. Lists
Descriptive Lists	Orders
Discharge Certificates	Pris. of War Record
Enlistment Papers 2	Resignations

Other papers relating to—

Admission to Hosp'l	Furlough or L. of A.
Casualty Sheet	Med. Examination
Confinement	Misc. Information
Contracts	Pay or Clothing
Death or Effects	Personal Reports
Desertion	Rank
Discharge from Hosp'l	Transfer to Hosp'l
Discharge from Service	Transfer to V. R. C.
Duty	Transportation

DECLARATION OF SUBSTITUTE.

I, William Thomas, desiring to ENLIST in the **Army of the United States,** for ~~THREE~~ one YEARS, ***Do declare,*** That I am 34 years and 10 months of age; that I have never been discharged from the United States service on account of disability or by sentence of a court martial; and I know of no impediment to my serving honestly and faithfully as a soldier for ~~three~~ one years.

GIVEN at Jacksonville Ills
the 13 day of April 1865

WITNESS:
A. H. Bunton

William X Thomas
mark

I

No. *Co. 2*
William Thomas
Enlisted at Jacksonville Ills

As Substitute for
Jonathan Thurman
On the 13 day of April, 1865,

By
Lt. Hamilton Co. 2
Ill. Volunteers
Port Byron Rock Island

Board of Enrollment,
10 Dist. of Ills

14

(No. 39.)

SUBSTITUTE

VOLUNTEER ENLISTMENT.

STATE OF Illinois TOWN OF Jacksonville

I, William Thomas, born in the State of Virginia, aged 34 years; and by occupation a Farmer, DO HEREBY ACKNOWLEDGE to have agreed with Jonathan Shivers, Esq., of Jacksonville Co Illinois to become his **SUBSTITUTE** in the Military Service, for a sufficient consideration paid and delivered to me, on the 13 day of April, 1865; and having thus agreed with said Jonathan Shivers, I DO HEREBY ACKNOWLEDGE to have enlisted this 13 day of April, 1865, to serve as a **Soldier** in the **Army of the United States of America,** for the period of ~~THREE~~ *ONE YEARS*, unless sooner discharged by proper authority. I do also agree to accept such bounty, pay, rations, and clothing as are, or may be, established by law for soldiers. And I do solemnly swear that I will bear true and faithful allegiance to the ***United States of America;*** that I will serve them honestly and faithfully against all their enemies or opposers whomsoever; and that I will observe and obey the orders of the President of the United States and the orders of the officers appointed over me, according to the Rules and Articles of War.

SWORN and subscribed to, at Jacksonville this 13 of April, 1865, BEFORE W W Dannelly Capt & Pro Mar 10 Dist Ills

William his X Thomas mark

We certify, on honor, That we have carefully examined the above-named Volunteer Substitute agreeably to the Regulations, and that, in our opinion, he is free from all bodily defects and mental infirmity which would in any way disqualify him from performing the duties of a soldier; that he was entirely sober when enlisted; that he is of lawful age, (not under 18 years;) and that, in accepting him as duly qualified to perform the duties of an able-bodied soldier, and as a Substitute in lieu of Jonathan Shivers, drafted in Jacksonville Ills March 28, 1865, we have strictly observed the Regulations which govern in such cases. This soldier has Black eyes, Black hair, Color complexion; is 5 feet 4 inches high.

W W Dannelly
Provost Marshal.

B Simmons
Commissioner of Board.

Nath[l] English
Surgeon of Board.

Board of Enrollment of 10 *Dist. of* Illinois

DECLARATION OF SUBSTITUTE.

I, William Thomas desiring to ENLIST in the **Army of the United States,** for ~~THREE~~ one YEARS, ***Do declare,*** That I am 24 years and 11 months of age; that I have never been discharged from the United States service on account of disability or by sentence of a court martial; and I know of no impediment to my serving honestly and faithfully as a soldier for ~~three~~ one years.

GIVEN at Jacksonville Ills
the 13 day of April 1865

WITNESS: [illegible] Bridson

William [illegible] Thomas
mark

I

No. 542

William Thomas

Enlisted at Shelbyville Ill

As Substitute for

Jonathan Shivers

On the 13 day of April, 1865,

By

Thos Hanrahan Pr Board

Of Examiners Company

Battle Axis Regt

Board of Enrollment,
11 Dist. of Ills

(No. 39.)

SUBSTITUTE

VOLUNTEER ENLISTMENT.

STATE OF Illinois TOWN OF Jacksonville

I, William Thomas, born in the State of Virginia, aged 34 years, and by occupation a Laborer, Do HEREBY ACKNOWLEDGE to have agreed with Jonathan Shivers, Esq., of Taylorville Christian County Ills to become his **SUBSTITUTE** in the Military Service, for a sufficient consideration paid and delivered to me, on the 19 day of April, 1865; and having thus agreed with said Jonathan Shivers, I DO HEREBY ACKNOWLEDGE to have enlisted this 19 day of April, 1865, to serve as a ***Soldier*** in the **Army of the United States of America,** for the period of ~~THREE~~ *YEAR*, unless sooner discharged by proper authority. I do also agree to accept such bounty, pay, rations, and clothing as are, or may be, established by law for soldiers. And I do solemnly swear that I will bear true and faithful allegiance to the ***United States of America;*** that I will serve them honestly and faithfully against all their enemies or opposers whomsoever; and that I will observe and obey the orders of the President of the United States and the orders of the officers appointed over me, according to the Rules and Articles of War.

SWORN and subscribed to, at Jacksonville

this 19 of April, 1865.

BEFORE G W Hammelberg

Capt & Pro Mar 10 Dist Ills

William his X mark Thomas

We certify, on honor, That we have carefully examined the above-named Volunteer Substitute agreeably to the Regulations, and that, in our opinion, he is free from all bodily defects and mental infirmity which would in any way disqualify him from performing the duties of a soldier; that he was entirely sober when enlisted; that he is of lawful age, (not under 18 years;) and that, in accepting him as duly qualified to perform the duties of an able-bodied soldier, and as a Substitute in lieu of Jonathan Shivers, drafted in Taylorville Ills March 28th, 1865, we have strictly observed the Regulations which govern in such cases. This soldier has black eyes, black hair, Colored complexion; is 5 feet 9 inches high.

G W Hammelberg

Provost Marshal.

B Sammons

Commissioner of Board.

Nath[l] English

Surgeon of Board.

Board of Enrollment of 10 *Dist. of* Illinois

L. 2057

Thomas. Williams

Co F, 13 U.S.Col'd H. Art'y.

Private | Private

CARD NUMBERS.

1	55 1 8 6 9 8	26	
2	55 1 7 9 6 5	27	
3	55 2 4 4 3 4	28	
4	55 2 4 5 8 8	29	
5	55 2 4 7 4 1	30	
6	9 1 2 9 8 1 5	31	
7		32	
8		33	
9		34	
10		35	
11		36	
12		37	
13		38	
14		39	
15		40	
16		41	
17		42	
18		43	
19		44	
20		45	
21		46	
22		47	
23		48	
24		49	
25		50	

Book Mark:

See also Co D. 121. USCHA

13 H. Art'y. | U.S.C.T.

William Thomas

....., Co. G, 13 Reg't U. S. Col'd H. Art'y.

Appears on

Company Descriptive Book

of the organization named above.

DESCRIPTION.

Age 28 years; height 5 feet 7½ inches.

Complexion Blk

Eyes Blk; hair Blk

Where born Harrison Co Ky

Occupation Laborer

ENLISTMENT.

When Feb 5, 1865.

Where Maysville Ky

By whom Kouph; term 3 y'rs.

Remarks: .....

E E Hyacomb

(383*g*) **Copyist.**

9 | 13 H. Art'y. | U.S.C.T.

William Thomas

Unk, Co. 9, 13 Reg't U. S. Col'd H. Art'y.

Appears on

M. and D. Roll of Men Transferred

to the organization named above,

from Co D 121 US C Inf

Roll dated Camp Nelson Ky June 23, 1865

When enlisted 3 Feb, 1863

Period for which enlisted 3 years.

When mustered in 9 Feb, 1865

Present or absent Not stated

Company to which assigned

Remarks: Credit to Mason Co.
9 Dist Ky

Book mark :

J. Meacham

Copyist.

(342)

I | 13 H. Art'y. | U.S.C.T.

William Thomas

Pvt., Co. ....., 13 Reg't U. S. Col'd H. Art'y.

Appears on

M. and D. Roll of Men Transferred

to the organization named above,

from Co....., 121 Reg't U. S. Colored Infantry.

Roll dated June 23, 1865

When enlisted Feb. 3, 1865

Period for which enlisted 3 years.

When mustered in Feb. 9, 1865

Present or absent Not stated

Company to which assigned I

Remarks: Credited to Mason Co. 9 D. Ky.

Book mark :

C. Williams

(342) *Copyist.*

13 H. Art'y. **U.S.C.T.**

William Rumas

R 2, Co. A, 13 Reg't U. S. Col'd H. Art'y.

Age ..... years.

Appears on

Company Muster Roll*

for 1 June 30, 1865.

Joined for duty and enrolled:

When Feb. 3, 1865.

Where Maysville Ky

Period 3 years

Mustered in:

When Feb. 9, 1865.

Where Bermudstown Ky

Present or absent Present

Stoppage, $.....100 for .....

Due Gov't, $.....100 for .....

Valuation of horse, $.....100

Valuation of horse equipments, $.....100

Remarks: .....

.....

* First current roll. No muster-in roll of this company on file.

Book mark: .....

(358b) Copyist.

N | 13 H. Art'y. | U.S.C.T.

William Thomas

W., Co. I, 13 Reg't U. S. Col'd H. Art'y.

Appears on

Company Muster Roll

for Sept 1 Aug., 1865.

Present or absent Present

Stoppage, $ 100 for

Due Gov't, $ 100 for

Valuation of horse, $ 100

Valuation of horse equipments, $ 100

Remarks:

NEXT ROLL ON FILE MUSTER OUT.

Book mark:

(358) Copyist.

G | 13 H. Art'y. | U.S.C.T.

William Thomas

F, Co. C, 13 Reg't U. S. Col'd H. Art'y.

Appears on **Co. Muster-out Roll,** dated Louisville Ky., Nov. 18, 1865.

Muster-out to date Nov. 18, 1865.

Last paid to June 30, 1865.

Clothing account:

Last settled ....., 186 ; drawn since $ 100

Due soldier $ ..... 100; due U. S. $ 10 46/100

Am't for cloth'g in kind or money adv'd $ 100

Due U. S. for arms, equipments, &c., $ 100

Bounty paid $ 100 00/100; due $ 100

Remarks: .....

Book mark: .....

J. Filo

(361) *Copyist.*

2058

Thompson. Caleb

Co B, 13 U.S.Col'd H.Art'y.

Private | Private

CARD NUMBERS.

1	5-5-15-7 5-6	26	
2	5-5-16 7 0 9	27	
3	5-5-20 7 5-3	28	
4	5-5-20 8 9 5-	29	
5	5-5-21 0 5-8	30	
6	5-5-21 2 0 8	31	
7	5-5-21 3 5-5-	32	
8	9 1 2 8 2 3 1	33	
9		34	
10		35	
11		36	
12		37	
13		38	
14		39	
15		40	
16		41	
17		42	
18		43	
19		44	
20		45	
21		46	
22		47	
23		48	
24		49	
25		50	

Book Mark:

See also

A/237212. P.O. 2nd Nov
A/138360 = P.O. 4/6
A. 13960 20 P.O. Auld
A. 225-3101 And H.D.

J. J. Townend & Co

I | 13 H. Art'y. | U.S.C.T.

Caleb Thompson

....., Co. B, 13 Reg't U. S. Col'd H. Art'y.

Appears on

Company Descriptive Book

of the organization named above.

DESCRIPTION.

Age 48 years; height 5 feet 7 inches.

Complexion Black

Eyes Black; hair Black

Where born Union County

Occupation Laborer

ENLISTMENT.

When January 20, 1865.

Where Paducah Ky

By whom Capt Morgan; term 3 y'rs.

Remarks:

Deserted

(383*g*) Copyist.

T | **13** H. Art'y. | **U.S.C.T.**

Caleb Thompson

Appears with rank of Pvt on

Muster and Descriptive Roll of a Detachment of U. S. Vols. forwarded

for the 13 Reg't U. S. Col'd H. Art'y. Roll dated

Paducah Ky., Jan 20, 1865.

Where born Union Co. Ky

Age 48 y'rs; occupation Laborer

When enlisted Jany 20, 1865.

Where enlisted Paducah Ky

For what period enlisted 3 years.

Eyes Black; hair Black

Complexion Black; height 5 ft. 7 in.

When mustered in Jany 20, 1865.

Where mustered in

Bounty paid $ 100; due $ 100

Where credited Union Co. 1 Dist of Ky

Company to which assigned B

Remarks:

Book mark:

Hammer

(339) *Copyist.*

J 13H. Arty | **U.S.C.T.**

Caleb Thompson

Pvt., Co. B, 13 Reg't U. S. Col'd H. Arty.

Age.....**years.**

Appears on

Company Muster Roll*

for Enlistment to Feb. 24, 1865:

Joined for duty and enrolled:

When ..... Jan. 20 ....., 1865.

Where ..... Paducah, Ky. .....

Period ...3... years.

Mustered in:

When ..... Jan. 20 ....., 1865.

Where ..... Paducah, Ky. .....

Present or absent Present.

Stoppage, $.....100 for.....

Due Gov't, $.....100 for.....

Valuation of horse, $.....100

Valuation of horse equipments, $.....100

Remarks: Due $40.00, 1st in-
stallment Gov't bounty.

*First current roll. No muster-in roll of this company on file.

Book mark :.....

Falconer

(3586) *Copyist.*

J | 13 H. Art'y. | U.S.C.T.

Caleb Thompson

Sgt., Co. B, 13 Reg't U. S. Col'd H. Art'y.

Appears on

Company Muster Roll

for March & Apr., 1865.

Present or absent Present.

Stoppage, $ 100 for

Due Gov't, $ 100 for

Valuation of horse, $ 100

Valuation of horse equipments, $ 100

Remarks: Due $40, first installment Govt bounty

Book mark:

Talmer

(358) *Copyist.*

I | 13 H. Art'y. | U.S.C.T.

Caleb Thompson

Appears with rank of Pvt. on

Muster and Descriptive Roll of a Detachment of U. S. Vols. ~~forwarded~~ organized as
Co. C.
for the 13 Reg't U. S. Col'd H. Art'y. Roll dated

Camp Nelson June 23 1865.

Where born Union Co., Ky

Age 48 y'rs; occupation Laborer

When enlisted Jan. 20, 1865.

Where enlisted Paducah, Ky.

For what period enlisted 3 years.

Eyes Bk; hair Bk

Complexion Bk; height 5 ft. 3 ~~in~~ in.

When mustered in Jan 20, 1865.

Where mustered in Paducah, Ky.

Bounty paid $ 100; due $ 100

Where credited 1st Dist Ky.

Company to which assigned B

Remarks:

Book mark:

Magruder
Copyist.

of	13 H. Art'y.	U.S.C.T.

Caleb Thompson

Sgt., Co. B, 13 Reg't U. S. Col'd H. Art'y.

Appears on

Company Muster Roll

for May & June, 1865.

Present or absent Present.

Stoppage, $ ..... 100 for .....

.....

Due Gov't, $ ..... 100 for .....

.....

Valuation of horse, $ 100

Valuation of horse equipments, $ 100

Remarks: Drew first instullment Gov't bounty.

.....

.....

.....

.....

.....

Book mark: .....

Talcum

(358) *Copyist.*

J | 13 H. Art'y. | **U.S.C.T.**

Caleb Thompson

Pvt., Co. B, 13 Reg't U. S. Col'd H. Art'y.

Appears on

Company Muster Roll

for July & Aug., 1865:

Present or absent Present.

Stoppage, $ 100 for

Due Gov't, $ 100 for

Valuation of horse, $ 100

Valuation of horse equipments, $ 100

Remarks: Due $100, first installment U. S. Govt bounty

NEXT ROLL ON FILE MUSTER OUT.

Book mark:

Falconer

(358) *Copyist.*

J | 13 H. Art'y. | U.S.C.T.

Caleb Thompson

Pvt., Co. B., 13 Reg't U. S. Col'd H. Art'y.

Appears on **Co. Muster-out Roll,** dated

Louisville, Ky., Nov. 15, 1865.

Muster-out to date Nov. 15, 1865.

Last paid to June 30, 1865.

Clothing account:

Last settled ....., 186 ; drawn since $ 100

Due soldier $ 23 09/100; due U. S. $ 100

Am't for cloth'g in kind or money adv'd $ 100

Due U. S. for arms, equipments, &c., $ 100

Bounty paid $ 100 100; due $ 100

Remarks: .....

.....

.....

.....

.....

.....

Book mark: .....

Falconer

(361) *Copyist.*

Thompson, Caleb

F, Co. B, 13 Reg't U S C H A

1 **Enclosures.**

Bed Cards	Final Statements
Burial Records	Furloughs or L. of A.
Certs. of Dis. for Discharge	Med. Certificates
C. M. Charges	Med. Des. Lists
Descriptive Lists	Orders
Discharge Certificates	Pris. of War Record
Enlistment Papers 1	Resignations

Other papers relating to—

Admission to Hosp'l	Furlough or L. of A.
Casualty Sheet	Med. Examination
Confinement	Misc. Information
Contracts	Pay or Clothing
Death or Effects	Personal Reports
Desertion	Rank
Discharge from Hosp'l	Transfer to Hosp'l
Discharge from Service	Transfer to V. R. C.
Duty	Transportation

NOTE 1.—This blank will be used for enlistments of United States colored troops. They will be made out in duplicate in all cases—one to accompany the recruiting return of the superintendent (not the recruiting officer) to the Adjutant General, and one to accompany the accounts of the officer who pays bounty, &c.

NOTE 2.—An enlistment holds to service. A muster-in must, in all cases, precede payment of pay, bounty, pension, &c. A muster-in roll, must in the Adjutant General's Office as evidence of muster-in. The mustering officer, commissary, or assistant commissary of musters, as the case may be, will countersign both enlistments as having mustered the soldiers into the service of the United States before either of them is given to the disbursing officer.

DECLARATION OF RECRUIT.

I, Caleb Thompson, of Union Co. Ky. desiring to volunteer as a soldier in the ARMY OF THE UNITED STATES, for the term of *Three Years*, DO DECLARE That I am 48 years and ..... months of age; that I have never been discharged from the United States service on account of disability or by sentence of a court-martial, or by order before the expiration of a term of enlistment; and I know of no impediment to my serving honestly and faithfully as a soldier for three years.

GIVEN at Paducah Ky

the 20th day of Jany 1865

Witness:

H. Wm. Gilliland

his
Caleb + Thompson
mark

Volunteered at Paducah No. Fifty Sixth Ky

on the 20th day of Jany 1865

By Capt. Morgan

Co. Enlisted

Caleb Thompson

Consent of Parent or Guardian in case of a Minor, if a Free Man, or in the case of a Slave, of the Person to whom he owes Service:

I, ... DO CERTIFY, That I am

the .....

.....

that the said ..... is ..... years of age; and I

do freely give my CONSENT to his volunteering as a SOLDIER in the Army of the United States, for the period of THREE YEARS, under the conditions of the laws of the United States.

GIVEN at .....

the ..... day of .....

Witness:

.....

.....

(A. G. O. No. 74 & 76.)

UNITED STATES COLORED TROOPS ENLISTMENT.

STATE OF Kentucky

TOWN OF Accredited to Union Co Ky

I, Caleb Thompson born in Union Co

in the State of Kentucky aged Forty Eight years

and by occupation a Laborer Do HEREBY ACKNOWLEDGE to

have volunteered Twentieth day of January 1865,

to serve as a **Soldier** in the **Army of the United States of America,** for the period of THREE YEARS, unless sooner discharged by proper authority: Do also agree to accept such bounty, pay, rations, and clothing, as are, or may be, established by law for the U. S. colored troops.

And I, Caleb Thompson, of Union Co. Ky. do solemnly swear that I will bear true faith and allegiance to the **United States of America,** and that I will serve them honestly and faithfully against all their enemies or opposers whomsoever; and that I will observe and obey the orders of the President of the United States, and the orders of the officers appointed over me, according to the Rules and Articles of War.

Sworn and subscribed to, at Paducah Ky

this 20th day of Janu 1865

Before J. W. Morgan Capt & Bvt Maj 1st Dist Ky

his
Caleb X Thompson
Mark

I CERTIFY, ON HONOR, That I have carefully examined the above named Volunteer agreeably to the General Regulations of the Army, and that, in my opinion, he is free from all bodily defects and mental infirmity, which would in any way disqualify him from performing the duties of a soldier.

J W Best

EXAMINING SURGEON.

I CERTIFY, ON HONOR, That I have minutely inspected the Volunteer, Caleb Thompson previously to his enlistment, and that he was entirely sober when enlisted; that, to the best of my judgment and belief, he is of lawful age; and that, in accepting him as duly qualified to perform the duties of an able-bodied soldier, I have strictly observed the regulations which govern the recruiting service. This soldier has Blk. *eyes*, Blk. *hair*, Blk. *complexion*, is 5 *feet* 7 *inches* high.

RECRUITING OFFICER OR AGENT.

Mustered into the United States Service 20th day of Janu 1865

J W Morgan
Capt & Bvt Maj *Mustering Officer.*
1st Dist Ky

Mustered into the service of the United States, for three years or during the war, from date of enlistment, in Company B

1st Regiment of Ky Col Volunteers, on the 20th day of Janu, 1865, at Paducah Ky.

Capt J W Morgan
Mustering Officer

Caleb Thompson
Recruiting Officer

2059

Thompson, Christopher

Co E, 13 U.S.Col'd H. Art'y.

Musician	Musician

CARD NUMBERS.

1	551809	26	
2	551777	27	
3	552480	28	
4	552494	29	
5	91292692	30	
6		31	
7		32	
8		33	
9		34	
10		35	
11		36	
12		37	
13		38	
14		39	
15		40	
16		41	
17		42	
18		43	
19		44	
20		45	
21		46	
22		47	
23		48	
24		49	
25		50	

Book Mark:

See also Geo G. 121. USC Inf.

4/ | **13** H. Art'y. | **U.S.C.T.**

Christopher Thornton

....., Co. K, 13 Reg't U. S. Col'd H. Art'y.

Appears on

Company Descriptive Book

of the organization named above.

DESCRIPTION.

Age 20 years; height 5 feet 6 inches.

Complexion Brown

Eyes Black; hair Black

Where born Fayette Co. Ky

Occupation Laborer

ENLISTMENT.

When May 16, 1865.

Where Nicholasville Ky

By whom Capt. Kinkaid; term 3 y'rs.

Remarks:

Musician

E. H. Spaunhorst

(383*g*) *Copyist.*

J | 13 H. Art'y. | U.S.C.T.

Christopher Thompson

2 Mus., Co. K, 13 Reg't U. S. Col'd H. Art'y.

Appears on

M. and D. Roll of Men Transferred

to the organization named above,

from Co. G, 21

Roll dated Camp Nelson Ky. June 23, 1865.

When enlisted May 16, 1865.

Period for which enlisted 3 years.

When mustered in June 10, 1865.

Present or absent Not stated

Company to which assigned

Remarks:

Book mark:

Rochester

(342) *Copyist.*

9 | 13 H. Art'y. | U.S.C.T.

Christopher Thompson

Max, Co. ....., 13 Reg't U. S. Col'd H. Art'y.

Appears on

M. and D. Roll of Men Transferred

to the organization named above,

from Co....., 121 Reg't U. S. Colored Infantry.

Roll dated June 23, 1865.

When enlisted May 16, 1863.

Period for which enlisted 3 years.

When mustered in June 13, 1865.

Present or absent Not stated

Company to which assigned K.

Remarks: Credited to Mont-
gomery Co. 9 D. Ky.

Book mark :

C. Williams

(342) *Copyist.*

f | 13 H. Art'y. | U.S.C.T.

Christopher Thomas

Mus, Co. K, 13 Reg't U. S. Col'd H. Art'y.

Age ..... years.

Appears on

Company Muster Roll*

for June 30, 1865.

Joined for duty and enrolled:

When May 16, 1865.

Where Maysville Ky.

Period 3 years

FROM SECOND AUDITOR'S ROLL.
NEXT ROLL ON FILE MUSTER OUT.

Mustered in:

When June 10, 1865.

Where Greensburg Ky.

Present or absent Present

Stoppage, $ 100 for .....

Due Gov't, $ 100 for .....

Valuation of horse, $ 100

Valuation of horse equipments, $ 100

Remarks: Transferred from 121 U. S. C. I.

* First current roll. No muster-in roll of this company on file.

Book mark: .....

Galligan

(3586) Copyist.

I | 13 H. Art'y. | U.S.C.T.

Christopher Thompson

Mus, Co. K, 13 Reg't U. S. Col'd H. Art'y.

Appears on **Co. Muster-out Roll,** dated Louisville Ky, Nov. 18, 186 5.

Muster-out to date Nov. 18, 186 5.

Last paid to June 30, 186 5.

Clothing account:

Last settled ....., 186 ; drawn since $ 100

Due soldier $ ....100; due U. S. $ 38 12/100

Am't for cloth'g in kind or money adv'd $ 100

Due U. S. for arms, equipments, &c., $ 100

Bounty paid $ ....100; due $ 100

Remarks: .....

Book mark: .....

Galligan

(361) *Copyist.*

2060

Thomson. David 1st.

Co S, 13 U.S.Col'd H. Art'y.

Private	Private

CARD NUMBERS.

1	5-5-1723 7	26	
2	5-5-1635-8	27	
3	5-5-2235-6	28	
4	5-5-2255-05-	29	
5	9128603	30	
6	J-152-07-1875	31	
7		32	
8		33	
9		34	
10		35	
11		36	
12		37	
13		38	
14		39	
15		40	
16		41	
17		42	
18		43	
19		44	
20		45	
21		46	
22		47	
23		48	
24		49	
25		50	

Book Mark: D.152.7.11.6D.75

See also

I | 13 H. Art'y. | U.S.C.T.

David Thompson

....., Co. D, 13 Reg't U. S. Col'd H. Art'y.

Appears on

Company Descriptive Book

of the organization named above.

DESCRIPTION.

Age 37 years; height 5 feet 3 inches.

Complexion Blk

Eyes Blk; hair Blk

Where born .....

Occupation Farmer

ENLISTMENT.

When Sept 2-1, 1864.

Where Covington Ky

By whom Cap Samuels; term 3 y'rs.

Remarks: .....

Deserted

(383g) **Copyist.**

I | 13 H. Art'y. | U.S.C.T.

David Thompson 1st

Appears with rank of Pvt on

Muster and Descriptive Roll of a Detachment of U. S. Vols. ~~forwarded~~ organized

for the 13 Reg't U. S. Col'd H. Art'y. Roll dated

Nov 1st, ..., 186 .

Where born .....

Age 37 y'rs; occupation Farmer

When enlisted Sept. 21, 1864.

Where enlisted Covington, Ky.

For what period enlisted 3 years.

Eyes Blk; hair Blk

Complexion Blk; height 5 ft. 3 in.

When mustered in Sept. 21, 1864.

Where mustered in Covington, Ky.

Bounty paid $ 100; due $ 100

Where credited .....

Company to which assigned K

Remarks: .....

.....

.....

.....

Book mark: .....

C B Taylor

(339) *Copyist.*

F | 13 H. Art'y. | U.S.C.T.

David Thompson

Appears with rank of Priv. on

Muster and Descriptive Roll of a Detachment of U. S. Vols. forwarded

for the 13 Reg't U. S. Col'd H. Art'y. Roll dated

D. R. Louisville, Ky, May 22, 1865.

Where born Kentucky

Age 37 y'rs; occupation

When enlisted , 186 .

Where enlisted Substitute.

For what period enlisted 3 years.

Eyes black; hair black

Complexion black; height 5 ft. 3 in.

When mustered in Sept. 21, 1864.

Where mustered in Covington

Bounty paid $ 100; due $ 100

Where credited 6 Dist., Ky.

Company to which assigned

Remarks:

Book mark:

Humphries

(339) Copyist.

U.S.C.T.

David Thompson

2nd, Co. W, 13 Reg't U. S. Col'd H.A.

Appears on

Company Muster Roll

for May & June, 1865.

Present or absent Present

Stoppage, $ 100 for

Due Gov't, $ 100 for

Valuation of horse, $ 100

Valuation of horse equipments, $ 100

Remarks: Has received pay
& Bounty Due 1st Jan
Installment Govt Bounty

FROM SECOND AUDITOR'S ROLL.

NEXT ROLL ON FILE MUSTER OUT.

Book mark:

Copyist.

13 H. Art'y. | U.S.C.T.

David Thompson Pvt

Inf., Co. D, 13 Reg't U. S. Col'd H. Art'y.

Appears on **Co. Muster-out Roll,** dated Louisville Ky, June 18, 1865.

Muster-out to date June 18, 1865.

Last paid to June 30, 1865.

Clothing account:

Last settled ....., 186 ; drawn since $ 100

Due soldier $ 71 10/100; due U. S. $ 100

Am't for cloth'g in kind or money adv'd $ 100

Due U. S. for arms, equipments, &c., $ 100

Bounty paid $ 100 100; due $ 100

Remarks: .....

Book mark: T 132 Vol. C.T. 75

Ligon

(361) *Copyist.*

I 13 Ga Rj 67.

David Thompson 1st

, Co. D, 13 Reg't 67 Ga

NOTATION.

Book mark: I-152-67-1875

War Department,

Adjutant General's Office,

Washington Apr 17, 1875.

Call from

returned with report.

The above book mark was noted on rolls in order to preserve results of search in this case.

C. C. Cusey

(475) *Copyist.*

Thompson David

P, Co. D, 13 Reg't Mass Inf

1 Enclosures.

Bed Cards	Descriptive Lists
Burial Records 2	Final Statements
Certs. of Dis. for Discharge	Furloughs
C. M. Charges	Med. Des. Lists
Med. Certificates	Orders

Other papers relating to—

Admission to Hosp'l	Furlough
Casualty Sheet (Officer's)	Med. Examination
Confinement	Misc. Information
Contracts	Pay or Clothing
Death or Effects	Personal Reports
Desertions	Rank
Discharge from Hosp'l	Transfer to Hosp'l
Discharge from Service	Transfer to V. R. C.
Duty	Transportation

HOSPITAL RECORD,

SUBJECT TO THE

ORDER OF THE SURGEON GENERAL

UNITED STATES ARMY.

David Thompson
Priv. D. 13. U. S. C. H. A.
Nov. 22. 65.
P. H. Louisville Ky

No. 1.

ECORD OF DEATH AND INTERMENT.

ıd number of person interred.	David Thompson
r and locality of the grave .	Range 39. Grave 22
ıl number of the deceased . .	
ıt, rank, and company . .	Pvt. Comp. D. 13th U.S. C.T.
ıce before enlistment . . .	
al condition, (and if married, esidence of the widow) .	
of death	Chronic Diarrhoea.
the deceased	
y	
nces and remarks . . .	No Descriptive Roll Inventory forwarded to A.G.O. U.S.A. November 22d, 1865.
f death and burial	

es sent to the Adjutant General of the United States Army, and to the Sexton of the Eastern Cemetery.

No Effects.

Ltr Dondson to S. J. G. Thom

Pvt David Thompson
A "B" 13th U. S. C. Cav
Died Ft. Sedgwick Colo.

Adjt. Gen's Office
1866

COPY OF RECORD FOR THE ADJUTANT GENERAL U.S. ARMY.

Sec. I 152, Act 11 Oct. I 175,

(from Second auditor)

J. B.

No. 2.

RECORD OF DEATH AND INTERMENT.

Name and number of person interred.	David Thompson
Number and locality of the grave . .	Range 39. Grave 22
Hospital number of the deceased . .	
Regiment, rank, and company . . .	Pvt Co D 13th U S Col'd Artillery
Residence before enlistment . . .	
Conjugal condition, (and if married, the residence of the widow) . .	
Cause of death	Chronic Diarrhoea
Age of the deceased	
Nativity	
References and remarks	No Descriptive Roll. Inventory forwarded to A. G. O. U.S.A.
Date of death and burial	Nov 22d , 1865.

[A duplicate of this Record has been forwarded to the Sexton, and another remains at this Hospital.]

To Bvt Maj. Gen. L. Thomas
Adjutant General U.S.A.

SIR:

It becomes my duty to inform you that the person above described died at this Hospital as herein stated; and that it is desired his remains should be interred with the usual military honors.

Respectfully,

Wm J. Dalton
Asst. Surgeon U. S. Army.

Post
MILITARY HOSPITAL, Louisville Ky.

This copy of Record is to be transmitted to the Adjutant General at Washington immediately after the place of burial and the number of the grave have been ascertained and registered. The above notification is to remain attached.

Reduced to Pvt

7061

Thompson. David. 2nd

Co S, 13 U.S.Col'd H. Art'y.

Enrolled	Enrolled

CARD NUMBERS.

1	5-5-17238	26	
2	5-5-38203	27	
3	5-5-22357	28	
4	5-5-2250-6	29	
5	9128604	30	
6	J152-CJ-1875	31	
7		32	
8		33	
9		34	
10		35	
11		36	
12		37	
13		38	
14		39	
15		40	
16		41	
17		42	
18		43	
19		44	
20		45	
21		46	
22		47	
23		48	
24		49	
25		50	

Book Mark: J. 152. 7.11.6 D. 75

See also

I. | 13th N. A. | U.S.C.T.

David Thompson 2nd

....., Co. D, 13 Reg't U. S. Col'd N. Atty

Appears on

Company Descriptive Book

of the organization named above.

DESCRIPTION.

Age 45 years; height 5 feet 9 inches.

Complexion Blk

Eyes Blk; hair Blk

Where born Shelby Co. Ky.

Occupation Laborer

ENLISTMENT.

When May 29. , 1865.

Where Lebanon Ky.

By whom Capt. Fiddler; term 3 y'rs.

Remarks:

(383y) Copyist.

1 | 13 H. Art'y. | U.S.C.T.

David Thompson 2nd

Appears with rank of Pvt on

Muster and Descriptive Roll of a Detachment of U. S. Vols. ~~forwarded~~ Organized

for the 13 Reg't U. S. Col'd H. Art'y. Roll dated

Nov 1 Oaied, , 186 .

Where born Shelby Co, Kentucky

Age 45 y'rs; occupation Laborer

When enlisted May 29, 1863.

Where enlisted Lebanon, Ky

For what period enlisted 3 years.

Eyes Blk; hair Blk,

Complexion Blk; height 5 ft. 7 in.

When mustered in May 29, 1863.

Where mustered in Lebanon Ky

Bounty paid $ 100; due $ 100

Where credited

Company to which assigned A

Remarks:

Book mark:

B Taylor

Copyist.

F | 13 H. Art'y. | U.S.C.T.

David Thompson

Appears with rank of ..... on

Muster and Descriptive Roll of a Detachment of U. S. Vols. forwarded

for the 13 Reg't U. S. Col'd H. Art'y. Roll dated

Lebanon Ky. May 31, 1865.

Where born Washington Ky.

Age 45 y'rs; occupation Laborer

When enlisted May 29, 1865.

Where enlisted Lebanon Ky

For what period enlisted 3 years.

Eyes Blk; hair Blk

Complexion Blk; height 5 ft. 9 in.

When mustered in May 29, 1865.

Where mustered in Lebanon Ky.

Bounty paid $ 100; due $ 100

Where credited .....

Company to which assigned .....

Remarks: Owners Name - Robt. M. Thompson - Residence - Washington Without Consent.

.....

Book mark: .....

Harris

(339) Copyist.

5 | 1314 G | **U.S.C.T.**

David Thompson (2nd)

Pvt., Co. D, 13 Reg't U. S. Col'd Inf.

Appears on

Company Muster Roll

for May & June, 1865.

Present or absent Present

Stoppage, $ 100 for

Due Gov't, $ 100 for

Valuation of horse, $ 100

Valuation of horse equipments, $ 100

Remarks: Mustered in Dec. 1863.
Bounty $100 paid Feb. 1864.
2nd Year Bounty

FROM SECOND AUDITOR'S ROLL.

NEXT ROLL ON FILE MUSTER OUT.

Book mark:

Logan

(358) *Copyist.*

I | 13 H. Art'y. | U.S.C.T.

(David Thompson 12th)
Pvt., Co. D, 13 Reg't U. S. Col'd H. Art'y.

Appears on **Co. Muster-out Roll,** dated
Louisville Ky., Nov 14, 1865.

Muster-out to date Nov 14, 1865.

Last paid to June 30, 1865.

Clothing account:

Last settled ....., 186 ; drawn since $ 100

Due soldier $ ..... 100; due U. S. $ 100

Am't for cloth'g in kind or money adv'd $ 66/100

Due U. S. for arms, equipments, &c., $ 100

Bounty paid $ 100 100; due $ 100

Remarks: .....

.....

.....

.....

.....

.....

Book mark: T 152 VII C.T. 75.

Logan

(361) *Copyist.*

T 152 M a 1875

Nancy Thompson 2nd

, Co D, 13 Reg't U S 6 Ga

NOTATION.

Book mark: T — 152 . 6 . T . 1875

War Department,

Adjutant General's Office,

Washington Nov 17, 1875.

Call from

returned with report.

The above book mark was noted on rolls in order to preserve results of search in this case.

C. C. Casey

(475) *Copyist.*

2062

Thompson. Jacob

Co M, 13 U.S. Col'd H. Art'y.

Private	Private

CARD NUMBERS.

1	55 1 8 8 5 4	26	
2	55 1 9 1 4 2	27	
3	55 2 5 6 5 7	28	
4	55 2 5 8 0 6	29	
5	55 2 5 9 3 3	30	
6	9 1 2 9 6 6 7	31	
7		32	
8		33	
9		34	
10		35	
11		36	
12		37	
13		38	
14		39	
15		40	
16		41	
17		42	
18		43	
19		44	
20		45	
21		46	
22		47	
23		48	
24		49	
25		50	

Book Mark:

See also Reg E 72 11 56 Inf.

I | 3 H. arty | **U.S.C.T.**

Jacob Thompson

....., Co. M, 13 Reg't U. S. Col'd H. Arty

Appears on

Company Descriptive Book

of the organization named above.

DESCRIPTION.

Age 23 years; height 5 feet 7½ inches.

Complexion Bk

Eyes Bk; hair Bk

Where born Fla

Occupation Farmer

ENLISTMENT.

When Jan. 3, 1865.

Where Pinn

By whom Capt Cross; term 3 y'rs.

Remarks: Substitute

E H Fitzpatrick

(383*g*) **Copyist.**

J | **13** H. Art'y. | **U.S.C.T.**

Jacob Thompson

Pvt, Co. M, 13 Reg't U. S. Col'd H. Art'y.

Age ..... years.

Appears on

Company Muster Roll*

for June 23 & 30, 1865.

Joined for duty and enrolled:

When ....., 186 .

Where .....

Period 3 years

Mustered in:

When Jan 3, 1865.

Where Gin O

Present or absent Present

Stoppage, $ 100 for .....

Due Gov't, $ 100 for .....

Valuation of horse, $ 100

Valuation of horse equipments, $ 100

Remarks: Substitute

Due US for C+E 65 cts

* First current roll. No muster-in roll of this company on file.

Book mark: .....

A B Gosh

(3586) *Copyist.*

J | 13 H. Art'y. | U.S.C.T.

Jacob Thompson

Pvt., Co. M, 13 Reg't U. S. Col'd H. Art'y.

Appears on

M. and D. Roll of Men Transferred

to the organization named above,

from Nov Dec 72 U S Col Inf

Roll dated July 3, 1865.

When enlisted ....., 186 .

Period for which enlisted ..... 3 years.

When mustered in Jan 3, 1865.

Present or absent Not stated

Company to which assigned .....

Remarks: Sub for Jacob Phelbora

Book mark :

J Hunderwood

(342) *Copyist.*

9 | 13 H. Art'y. | U.S.C.T.

Jacob Thompson

Pvt, Co....., 13 Reg't U. S. Col'd H. Art'y.

Appears on

M. and D. Roll of Men Transferred

to the organization named above,

from 72 U S C. I

Roll dated July 3, 1865.

When enlisted ....., 186 .

Period for which enlisted 3 years.

When mustered in Jan 3, 1865.

Present or absent not stated

Company to which assigned M

Remarks:

1 Dist Ky.

× Sub for Jacob Phillpen

× Inserted by compiler.

Book mark :

(342) J Hammond
Copyist.

J | 13 H. Art'y. | U.S.C.T.

Jacob Thompson

Pvt, Co. M, 13 Reg't U. S. Col'd H. Art'y.

Appears on

Company Muster Roll

for July & Aug, 1865.

Present or absent Absent

Stoppage, $ - 65/100 for C & E & Cost

Due Gov't, $ 100 for

Valuation of horse, $ 100

Valuation of horse equipments. $ 100

Remarks: Sick in U S A Hos Camp Nelson Ky July 16- 65

NEXT ROLL ON FILE MUSTER OUT.

Book mark:

Abbott

(358) Copyist.

I | 13 H. Art'y. | U.S.C.T.

Jacob Thompson

Pvt, Co. M, 13 Reg't U. S. Col'd H. Art'y.

Appears on **Co. Muster-out Roll,** dated Louisville Ky, Nov 18, 1865.

Muster-out to date Nov 18, 1865.

Last paid to ----, 186 .

Pay due from Enlistment

Clothing account:

Last settled ----, 186 ; drawn since $ ---- 100

Due soldier $ 15 89/100; due U. S. $ ---- 100

Am't for cloth'g in kind or money adv'd $ ---- 100

Due U. S. for arms, equipments, &c., $ ---- 100

Bounty paid $ ---- 100; due $ ---- 100

Remarks: ----

Book mark: ----

Adgon

(361) *Copyist.*

2063

Thompson, James

Co ----------, 13 U.S. Col'd H. Art'y.

Private | Private

CARD NUMBERS.

1	55/19237	26	
2		27	
3		28	
4		29	
5		30	
6		31	
7		32	
8		33	
9		34	
10		35	
11		36	
12		37	
13		38	
14		39	
15		40	
16		41	
17		42	
18		43	
19		44	
20		45	
21		46	
22		47	
23		48	
24		49	
25		50	

Book Mark: ----------

See also 72 2858 Inf.

F | 13 H. Art'y. | U.S.C.T.

James Thompson

....., Co....., 13 Reg't U. S. Col'd H. Art'y.

Appears on

M. and D. Roll of Men Transferred

to the organization named above,

from 72 Nov 64

Roll dated July 3, 1865.

When enlisted ....., 186 .

Period for which enlisted ..... 1 years.

When mustered in Nov 25, 1864.

Present or absent .....

Company to which assigned A

Remarks: Substitute

Deserted June 18/65-

Art taken such on rolls of Regt.

Book mark : .....

J Hammond

(342) *Copyist.*

2064

Thompson. Isaac James or

Co. H, 13 U.S.Col'd H. Art'y.

Private | Private

CARD NUMBERS.

1	55 1853	26	
2	55 1795	27	
3	55 2396	28	
4	55 2411	29	
5	55 2456	30	
6	91292277	31	
7		32	
8		33	
9		34	
10		35	
11		36	
12		37	
13		38	
14		39	
15		40	
16		41	
17		42	
18		43	
19		44	
20		45	
21		46	
22		47	
23		48	
24		49	
25		50	

Book Mark:

See also Co F 121. U.S.C.T. Inf.

D | 13 H. Art'y. | U.S.C.T.

Isaac Thompson

....., Co. H, 13 Reg't U.S. Col'd H. Art'y.

Appears on

Company Descriptive Book

of the organization named above.

DESCRIPTION.

Age 17 years; height 5 feet 7½ inches.

Complexion Black

Eyes Blk; hair Blk

Where born Tazewell Co, Va.

Occupation Laborer

ENLISTMENT.

When May 28, 1863.

Where Piketon Ky

By whom Lt G C Clapp; term 3 y'rs.

Remarks:

Beck

(383*a*) **Copyist.**

F | 13 H. Art'y. | U.S.C.T.

Isaac Thompson

Pvt., Co. F, 13 Reg't U. S. Col'd H. Art'y.

Appears on

M. and D. Roll of Men Transferred

to the organization named above,

from Co. F, 121 Reg't U. S. Colored Infantry.

Roll dated Camp Nelson, Ky. June 23, 1865.

When enlisted May 28, 1865.

Period for which enlisted 3 years.

When mustered in June 5, 1865.

Present or absent Not stated

Company to which assigned

Remarks:

Book mark:

Rochester

(342) *Copyist.*

F | 13 H. Art'y. | U.S.C.T.

Isaac Thompson

Pvt., Co. ....., 13 Reg't U. S. Col'd H. Art'y.

Appears on

M. and D. Roll of Men Transferred

to the organization named above,

from Co....., 121 Reg't U. S. Colored Infantry.

Roll dated June 26, 1865.

When enlisted May 28, 1865.

Period for which enlisted 3 years.

When mustered in June 5, 1865.

Present or absent Not stated

Company to which assigned 16

Remarks: Credited to Pike Co.

9 D. ky

Book mark :

C. Williams

(342) *Copyist.*

I | 13th A. | U.S.C.T.

Isaac Tomlin

Pvt, Co. A, 13 Reg't U. S. Col'd Inf

Age ____ years.

Appears on

Company Muster Roll*

for May & June, 1865.

Joined for duty and enrolled:

When May 20, 1865.

Where Pikeville Ky

Period 3 years.

Mustered in:

When June 5, 1865.

Where Lumpkins Ky

Present or absent Present

Stoppage, $ 100 for ____

Due Gov't, $ 100 for ____

Valuation of horse, $ 100

Valuation of horse equipments, $ 100.

Remarks: ____

*First current roll. No muster-in roll of this company on file.

Book mark: ____

(358*b*) *Copyist.*

13 H. Art'y. | U.S.C.T.

Name Isaac Tompkins

Rank Co. H, 13 Reg't U. S. Col'd H. Art'y.

Appears on

Company Muster Roll

for July ~ Aug, 1865.

Present or absent Present

Stoppage, $ 100 for

Due Gov't, $ 100 for

Valuation of horse, $ 100

Valuation of horse equipments, $ 100

Remarks: All W. for Cloth & Equip Cost. 14

NEXT ROLL ON FILE MUSTER OUT.

Book mark:

(358) *Copyist.*

13 H. Art'y. | U.S.C.T.

Page Name Thompson

Pvt., Co. H, 13 Reg't U. S. Col'd H. Art'y.

Appears on **Co. Muster-out Roll,** dated Louisville Ky, Nov 1st, 1865.

Muster-out to date Nov 1st, 1865.

Last paid to Dec 31, 1865.

Clothing account:

Last settled ....., 186 ; drawn since $ 100

Due soldier $ ..... 100; due U. S. $ 15 94/100

Am't for cloth'g in kind or money adv'd $ 100

Due U. S. for arms, equipments, &c., $ 100

Bounty paid $ ..... 100; due $ 100

Remarks: .....

.....

.....

.....

.....

.....

Book mark: .....

---

(361) *Copyist.*

2065

Thompson. James

Co L, 13 U.S. Col'd H. Art'y.

Private | Private

CARD NUMBERS.

1	55 19377	26	
2	55 19130	27	
3	55 25217	28	
4	55 25365	29	
5	55 25490	30	
6	91295 32	31	
7		32	
8		33	
9		34	
10		35	
11		36	
12		37	
13		38	
14		39	
15		40	
16		41	
17		42	
18		43	
19		44	
20		45	
21		46	
22		47	
23		48	
24		49	
25		50	

Book Mark:

See also Co. B 72 U.S.C.H. Inf.

2065

Thompson. James

Co L, 13 U.S. Col'd H. Art'y.

Private	Private

CARD NUMBERS.

1	55 19377	26	
2	55 19130	27	
3	55 25217	28	
4	55 25365	29	
5	55 25490	30	
6	91295532	31	
7		32	
8		33	
9		34	
10		35	
11		36	
12		37	
13		38	
14		39	
15		40	
16		41	
17		42	
18		43	
19		44	
20		45	
21		46	
22		47	
23		48	
24		49	
25		50	

Book Mark:

See also Co. B 72 USColInf.

13 H. Art'y. | U.S.C.T.

James Thomas

....., Co. L, 13 Reg't U. S. Col'd H. Art'y.

Appears on

Company Descriptive Book

of the organization named above.

DESCRIPTION.

Age 28 years; height 5 feet 2½ inches.

Complexion Blk

Eyes Blk; hair Blk

Where born Virginia

Occupation Laborer

ENLISTMENT.

When Dec 28, 1864.

Where Prov. Dept.

By whom Capt Cory; term 1 y'rs.

Remarks: Substitute

E. H. Hollowell

(383*g*) **Copyist.**

F | 13 H. Art'y. | U.S.C.T.

James Thompson

Pvt., Co. L, 13 Reg't U. S. Col'd H. Art'y.

Age ..... years.

Appears on

Company Muster Roll*

for Jo June 30, 1865.

Joined for duty and enrolled:

When ....., 186 .

Where .....

Period 1 years

Mustered in:

When Dec 28, 1864.

Where Ironton O

Present or absent Present

Stoppage, $ 100 for .....

Due Gov't, $ 100 for .....

Valuation of horse, $ 100

Valuation of horse equipments, $ 100

Remarks; Hose for one waist belt plate & one bayonet & Scabbard. Sub stitute

* First current roll. No muster-in roll of this company on file.

Book mark: .....

Leger

(3586) Copyist.

J | 13 H. Art'y. | U.S.C.T.

James Thompson

Pvt., Co. L, 13 Reg't U. S. Col'd H. Art'y.

Appears on

M. and D. Roll of Men Transferred

to the organization named above,

from Co B 72 USC Inf

Roll dated Camp Nelson Ky July 3, 1865.

When enlisted ....., 186 .

Period for which enlisted ..... 1 ..... years.

When mustered in ..... Dec 28 ....., 1864.

Present or absent ..... not stated .....

Company to which assigned .....

Remarks: Sub for Joshua E. Stephenson

Book mark : .....

S Rhuehart

(342) *Copyist.*

9 | 13 H. Art'y. | U.S.C.T.

James Thompson

Pvt., Co....., 13 Reg't U. S. Col'd H. Art'y.

Appears on

M. and D. Roll of Men Transferred

to the organization named above,

from 12 M.S.C.I.

Roll dated July 3, 1865.

When enlisted , 186 .

Period for which enlisted 1 years.

When mustered in Dec 28, 1864.

Present or absent not stated

Company to which assigned L

Remarks:

Sub. for Joshua Stephenson

Book mark :

(342) J Underwood

Copyist.

I | 13 H. Art'y. | U.S.C.T.

James Thompson

Pt....., Co. L, 13 Reg't U. S. Col'd H. Art'y.

Appears on

Company Muster Roll

for July & Aug, 1865.

Present or absent Present

Stoppage, $.....100 for .....

.....

Due Gov't, $.....100 for .....

.....

Valuation of horse, $.....100

Valuation of horse equipments, $.....100

Remarks: Left for one
waist belt-plate
one bayonet & one
scabbard $2.22

.....

.....

NEXT ROLL ON FILE MUSTER OUT.

.....

.....

Book mark: .....

Leger

(358) *Copyist.*

I | **13** H. Art'y. | **U.S.C.T.**

[illegible]

[illegible], Co. L, 13 Reg't U. S. Col'd H. Art'y.

Appears on **Co. Muster-out Roll,** dated Louisville Ky, Nov 10, 1865.

Muster-out to date Nov 10, 1865.

Last paid to June 30, 1865.

Clothing account:

Last settled ....., 186 ; drawn since $ 100

Due soldier $ ..... 100; due U. S. $ 100

Am't for cloth'g in kind or money adv'd $ 72 24/100

Due U. S. for arms, equipments, &c., $ 100

Bounty paid $ ..... 100; due $ 100

Remarks: .....

.....

.....

.....

.....

.....

Book mark: .....

Copyist

(361) ***Copyist.***

2066 James

Thompson.

Co H, 13 U.S. Col'd H. Art'y.

Private	Private

CARD NUMBERS.

1	5 5 1 8 5 3 5	26	
2	5 5 1 7 9 5 8	27	
3	5 5 2 3 9 5 5	28	
4	5 5 2 4 1 1 0	29	
5	5 5 2 4 2 5 4	30	
6	7 1 2 9 2 2 6	31	
7		32	
8		33	
9		34	
10		35	
11		36	
12		37	
13		38	
14		39	
15		40	
16		41	
17		42	
18		43	
19		44	
20		45	
21		46	
22		47	
23		48	
24		49	
25		50	

Book Mark:

See also Leo F. 121. 2nd Inf.

F | 13 H. Art'y. | U.S.C.T.

James L Thompson

....., Co. F, 13 Reg't U. S. Col'd H. Art'y.

Appears on

Company Descriptive Book

of the organization named above.

DESCRIPTION.

Age 18 years; height 5 feet 3 3/8 inches.

Complexion Yellow

Eyes Blue; hair dark

Where born Washington Co Va

Occupation Laborer

ENLISTMENT.

When May 28, 1863.

Where Paducah Ky

By whom Lt G C Clapp; term 3 y'rs.

Remarks:

Beck

(383*g*) **Copyist.**

J | 13 H. Art'y. | U.S.C.T.

James Thompson

Sergt., Co. F, 13 Reg't U. S. Col'd H. Art'y.

Appears on

M. and D. Roll of Men Transferred

to the organization named above,

from Co. F, 121 Reg't U. S. Colored Infantry.

Roll dated Camp Nelson, Ky. June 23, 1865.

When enlisted May 28, 1865.

Period for which enlisted 3 years.

When mustered in June 5, 1865.

Present or absent Not stated

Company to which assigned

Remarks:

Book mark:

Rochester

(342) *Copyist.*

F | 13 H. Art'y. | U.S.C.T.

James Thompson

Pvt., Co. ....., 13 Reg't U. S. Col'd H. Art'y.

Appears on

M. and D. Roll of Men Transferred

to the organization named above,

from Co....., 121 Reg't U. S. Colored Infantry.

Roll dated June 25, 1865.

When enlisted May 28, 1865.

Period for which enlisted 3 years.

When mustered in June 5, 1865.

Present or absent Not stated.

Company to which assigned H

Remarks: Credited to Pike

Co. 9 D. Ky.

Book mark :

L. Williams

(342) *Copyist.*

U.S.C.T.

Thos Ferguson

Pvt, Co. G, 3 Reg't U. S. Col'd T. C

Age ____ years.

Appears on

Company Muster Roll*

for May & June, 1865.

Joined for duty and enrolled:

When May 28, 1865.

Where Pikeville Ky

Period 3 years.

Mustered in:

When June 5, 1865.

Where Crumpsburg Ky

Present or absent Present

Stoppage, $ 100 for ____

Due Gov't, $ 100 for ____

Valuation of horse, $ 100

Valuation of horse equipments, $ 100

Remarks: ____

* First current roll. No muster-in roll of this company on file.

Book mark: ____

(358*b*) *Copyist.*

I | 13 H. Art'y. | U.S.C.T.

James Thompson

A, Co. H, 13 Reg't U. S. Col'd H. Art'y.

Appears on

Company Muster Roll

for July & Aug, 1865.

Present or absent Present

Stoppage, $ 100 for

Due Gov't, $ 100 for

Valuation of horse, $ 100

Valuation of horse equipments, $ 100

Remarks: due 11 for Camp
& Equip L 33

NEXT ROLL ON FILE MUSTER OUT.

Book mark :

(358) *Copyist.*

I | 13 H. Art'y. | U.S.C.T.

James Thompson

Pr, Co. H, 13 Reg't U. S. Col'd H. Art'y.

Appears on **Co. Muster-out Roll,** dated Louisville Ky, Nov 18, 1865.

Muster-out to date Nov 18, 1865.

Last paid to June 30, 1865.

Clothing account:

Last settled ....., 186 ; drawn since $ 100

Due soldier $ ..... 100; due U. S. $ 24 45/100

Am't for cloth'g in kind or money adv'd $ 100

Due U. S. for arms, equipments, &c., $ 100

Bounty paid $ ..... 100; due $ 100

Remarks: .....

.....

.....

.....

.....

.....

Book mark: .....

W Hamick

(361) *Copyist.*

2067

Thompson. Lee

Co C, 13 U.S.Col'd H. Art'y.

Private	Private

CARD NUMBERS.

1	5-5-15872	26	
2	5-5-16898	27	
3	5-5-21335	28	
4	5-5-21706	29	
5	5-5-21885	30	
6	5-5-22028	31	
7	91284 12	32	
8		33	
9		34	
10		35	
11		36	
12		37	
13		38	
14		39	
15		40	
16		41	
17		42	
18		43	
19		44	
20		45	
21		46	
22		47	
23		48	
24		49	
25		50	

Book Mark:

See also

L766655 R6.90.
S-993987 - P.O mom
ab1919450

13 H. Art'y. | U.S.C.T.

....., Co. ....., 13 Reg't U. S. Col'd H. Art'y.

Appears on

Company Descriptive Book

of the organization named above.

DESCRIPTION.

Age 18 years; height 5 feet 3 inches.

Complexion Black

Eyes Black; hair Black

Where born Kentucky

Occupation Laborer

ENLISTMENT.

When Sept 7, 1863.

Where Cadwalader Ky

By whom Capt Morgan; term 3 y'rs.

Remarks:

Deserted

(383*g*) *Copyist.*

6 | **13 H. Art'y.** | **U.S.C.T.**

Lee Thompson

Appears with rank of Pvt on

Muster and Descriptive Roll of a Detachment of U. S. Vols. forwarded

for the 13 Reg't U. S. Col'd H. Art'y. Roll dated

Paducah Ky, Feb. 27, 1865.

Where born Kentucky

Age 18 y'rs; occupation Laborer

When enlisted Feb. 7, 1865.

Where enlisted Paducah, Ky

For what period enlisted 3 years.

Eyes Black; hair Black

Complexion Black; height 5 ft. 3 in.

When mustered in Feb. 7, 1865.

Where mustered in Paducah, Ky

Bounty paid $ 100; due $ 100

Where credited Triggs Lea / Dist of Ky

Company to which assigned G

Remarks:

Book mark:

Hammer

(339) Copyist.

T | 13 H. Art'y. | U.S.C.T.

Lee Thompson

Pt, Co. C, 13 Reg't U. S. Col'd H. Art'y.

Age ..... years.

Appears on

Company Muster Roll*

for to Apr 30, 1865.

Joined for duty and enrolled:

When Feb 7, 1865.

Where Paducah Ky

Period 3 years

Mustered in:

When July 7, 1865.

Where Paducah Ky

Present or absent Present

Stoppage, $ 100 for .....

Due Gov't, $ 100 for .....

Valuation of horse, $ 100

Valuation of horse equipments, $ 100

Remarks: .....

* First current roll. No muster-in roll of this company on file.

Book mark: .....

Van Houten

Copyist.

(3586)

13 H. Art'y. | U.S.C.T.

Lee Thompson

Appears with rank of Pvt on

Muster and Descriptive Roll of a Detachment of U. S. Vols. ~~forwarded~~ Organized

for the 13 Reg't U. S. Col'd H. Art'y. Roll dated

Camp Nelson Ky June 23, 1865.

Where born Kentucky

Age 18 y'rs; occupation Laborer

When enlisted Feb. 7, 1865.

Where enlisted Paducah, Ky.

For what period enlisted 3 years.

Eyes Black; hair Black

Complexion Black; height 5 ft. 3 in.

When mustered in Feb. 7, 1865.

Where mustered in Paducah Ky

Bounty paid $ None 100; due $ 100

Where credited Cong. Dist. Ky

Company to which assigned 2

Remarks:

Book mark:

Taylor

(339) *Copyist.*

I | 13 H. Art'y. | U.S.C.T.

Lee Thompson

B., Co. C, 13 Reg't U. S. Col'd H. Art'y.

Appears on

Company Muster Roll

for May & June, 186 5.

Present or absent Present

Stoppage, $ 100 for

Due Gov't, $ 100 for

Valuation of horse, $ 100

Valuation of horse equipments. $ 100

Remarks: No bounty rec'd. Due first install-ment of bounty

FROM SECOND AUDITOR'S ROLL.

Book mark:

Thos Hanken

(358) Copyist.

J | 13 H. Art'y. | U.S.C.T.

Jer Thompson

Pt., Co. C, 13 Reg't U. S. Col'd H. Art'y.

Appears on

Company Muster Roll

for July & Aug, 1865.

Present or absent Present

Stoppage, $ 100 for

Due Gov't, $ 100 for

Valuation of horse, $ 100

Valuation of horse equipments. $ 100

Remarks: Rec'd first enlistment bounty $ 100,00

J.

NEXT ROLL ON FILE MUSTER OUT.

Book mark:

Wm Hamlin

(358) Copyist.

O | **13** H. Art'y. | **U.S.C.T.**

Ed Thompson

Pt, Co. G, 13 Reg't U. S. Col'd H. Art'y.

Appears on **Co. Muster-out Roll,** dated Louisville Ky, Nov 18, 1865.

Muster-out to date Nov 18, 1865.

Last paid to June 30, 1865.

Clothing account:

Last settled ....., 186 ; drawn since $ 100

Due soldier $ ..... 100; due U. S. $ 11 93/100

Am't for cloth'g in kind or money adv'd $ 100

Due U. S. for arms, equipments, &c., $ 100

Bounty paid $ 100 00/100; due $ 100

Remarks: .....

Book mark: .....

(361) Jno Hanten

Copyist.

Thompson, Lee

....., Co. ....., 13 Reg't H & S C H A

1 **Enclosures.**

Bed Cards	Final Statements
Burial Records	Furloughs or L. of A.
Certs. of Dis. for Discharge	Med. Certificates
C. M. Charges	Med. Des. Lists
Descriptive Lists	Orders
Discharge Certificates	Pris. of War Record
Enlistment Papers 1	Resignations

Other papers relating to—

Admission to Hosp'l	Furlough or L. of A.
Casualty Sheet	Med. Examination
Confinement	Misc. Information
Contracts	Pay or Clothing
Death or Effects	Personal Reports
Desertion	Rank
Discharge from Hosp'l	Transfer to Hosp'l
Discharge from Service	Transfer to V. R. C.
Duty	Transportation

DECLARATION OF RECRUIT.

I, Lee Thompson of Trigg County, desiring to volunteer as a soldier in the ARMY OF THE UNITED STATES, for the term of *Three Years*, DO DECLARE That I am 18 years and ..... months of age; that I have never been discharged from the United States service on account of disability or by sentence of a court-martial, or by order before the expiration of a term of enlistment; and I know of no impediment to my serving honestly and faithfully as a soldier for three years.

GIVEN at Cadiz Ky

the 9th day of July 1863

Witness: E R Bradshaw

his
Lee X Thompson
mark

No. Eighty-Nine

Volunteered at Cadiz Ky

July 9th 1863

By Capt. J. Bradshaw

Recruiting Officer

Lee Thompson

Consent of Parent or Guardian in case of a Minor, if a Free Man, and in the case of a Slave, of the Person to whom he owes Service:

I, ... DO CERTIFY, That I am

the .....

.....

that the said ..... is ..... years of age; and I do freely give my CONSENT to his volunteering as a SOLDIER in the Army of the United States, for the period of THREE YEARS, under the conditions of the laws of the United States.

GIVEN at .....

the ..... day of .....

Witness:

.....

.....

(A. G. O. No. 74 & 76.)

NOTE 1.—This blank will be used for enlistments of United States colored troops. They will be made out in duplicate in all cases—one to accompany the recruiting return of the superintendent (not the recruiting officer) to the Adjutant General, and one to accompany the accounts of the officer who pays bounty, &c.

NOTE 2.—An enlistment holds to payment of pay, bounty, pension, &c. A muster-in must, in all cases, precede pay to service. A muster-in roll, must in all cases, be filed in the Adjutant General's Office as evidence of muster-in. The mustering officer, commissary, or assistant commissary of musters, as the case may be, will countersign both enlistments as having mustered the soldiers into the service of the United States before either of them is given to the disbursing officer.

UNITED STATES COLORED TROOPS ENLISTMENT.

STATE OF Kentucky TOWN OF Accredited to Trigg Co Ky

I, Lee Thompson born in

in the State of Kentucky aged Eighteen years

and by occupation a Laborer Do HEREBY ACKNOWLEDGE to

have volunteered Seventh day of Feby 186 5

to serve as a **Soldier** in the **Army of the United States of America,** for the period of THREE YEARS, unless sooner discharged by proper authority: Do also agree to accept such bounty, pay, rations, and clothing, as are, or may be, established by law for the U. S. colored troops.

And I, Lee Thompson of Trigg Co Ky do solemnly swear that I will bear true faith and allegiance to the **United States of America,** and that I will serve them honestly and faithfully against all their enemies or opposers whomsoever; and that I will observe and obey the orders of the President of the United States, and the orders of the officers appointed over me, according to the Rules and Articles of War.

Sworn and subscribed to, at Paducah Ky
this 7th day of Feby 1865
Before Jno H Morgan
Capt 2d U S Col'd Inft'y

his
Lee X Thompson
mark

I CERTIFY, ON HONOR, That I have carefully examined the above named Volunteer agreeably to the General Regulations of the Army, and that, in my opinion, he is free from all bodily defects and mental infirmity, which would in any way disqualify him from performing the duties of a soldier.

J M Bostic

EXAMINING SURGEON.

I CERTIFY, ON HONOR, That I have minutely inspected the Volunteer, Lee Thompson previously to his enlistment, and that he was entirely sober when enlisted; that, to the best of my judgment and belief, he is of lawful age; and that, in accepting him as duly qualified to perform the duties of an able-bodied soldier, I have strictly observed the regulations which govern the recruiting service. This soldier has Blk eyes, Blk hair, Black complexion, is 5 feet 5 inches high.

RECRUITING OFFICER OR AGENT.

Mustered into the United States Service 7th day of Feby 1865.

Jno H Morgan
Capt 2d U S Col'd Inft'y & Mustering Officer.

Mustered into the service of the United States, for three years or during the war, from date of enlistment, in Company C, 114th Regiment of Colored Volunteers, on the 7th day of Feby, 1865, at Paducah Ky

Lee Thompson

Jno H Morgan
Capt 2d U S Col'd Inft'y
Mustering Officer

2068

Thompson, Luther

Co B, 13 U.S.Col'd H. Art'y.

Enrolled	Enrolled

CARD NUMBERS.

1	5.5.1.5.2.5.7	26	
2	5.5.2.6.7.1.0	27	
3	5.5.2.0.7.5.4	28	
4	5.5.2.0.8.5.6	29	
5	5.5.2.1.0.5.9	30	
6	5.5.2.1.2.8.9	31	
7	5.5.2.1.3.5.6	32	
8	9.1.2.8.2.3.2	33	
9		34	
10		35	
11		36	
12		37	
13		38	
14		39	
15		40	
16		41	
17		42	
18		43	
19		44	
20		45	
21		46	
22		47	
23		48	
24		49	
25		50	

Book Mark:

See also

D 260058. and D

I | 13 H. Art'y. | U.S.C.T.

Luther Thompson

....., Co. B, 13 Reg't U. S. Col'd H. Art'y.

Appears on

Company Descriptive Book

of the organization named above.

DESCRIPTION.

Age 19 years; height 5 feet 2½ inches.

Complexion Black

Eyes Black; hair Black

Where born Union Co Ky

Occupation Laborer

ENLISTMENT.

When Jany 20, 1863.

Where Paducah Ky

By whom Capt Morgan; term 3 y'rs.

Remarks:

Dedrick

(383*a*) **Copyist.**

F | 13 H. Art'y. | U.S.C.T.

Luther Thompson

Appears with rank of Pvt on

Muster and Descriptive Roll of a Detachment of U. S. Vols. forwarded

for the 13 Reg't U. S. Col'd H. Art'y. Roll dated

Paducah Ky, Jan 20, 1865

Where born Union Co. Ky

Age 19 y'rs; occupation Laborer

When enlisted Jany 20, 1865

Where enlisted Paducah Ky

For what period enlisted 3 years.

Eyes Black; hair Black

Complexion Black; height 5 ft 2 1/2 in.

When mustered in Jan. 20, 1865

Where mustered in

Bounty paid $ 100; due $ 100

Where credited Union Co. 1st Dist of Ky

Company to which assigned B

Remarks:

Book mark:

Hammer

(339) *Copyist.*

I 13th Ky. | U.S.C.T.

Luther Thompson

Pvt., Co. B, 13 Reg't U. S. Col'd Hvy.

Age ..... years.

Appears on

Company Muster Roll*

for Enlistment to Feb. 28, 1865.

Joined for duty and enrolled:

When ..... Jan. 20 ....., 1865.

Where ..... Paducah, Ky .....

Period 3 years.

Mustered in:

When ..... Jan. 20 ....., 1865.

Where ..... Paducah, Ky .....

Present or absent Present.

Stoppage, $ ..... 100 for .....

Due Gov't, $ ..... 100 for .....

Valuation of horse, $ 100

Valuation of horse equipments, $ 100

Remarks: Due 1st Installment Gift bounty $40.00

*First current roll. No muster-in roll of this company on file.

Book mark: .....

Talcumen

(3586) *Copyist.*

J | 13 H. Art'y. | U.S.C.T.

Luther Thompson

Pvt., Co. B, 13 Reg't U. S. Col'd H. Art'y.

Appears on

Company Muster Roll

for Mar. & Apr., 1865.

Present or absent Absent

Stoppage, $ 100 for

Due Gov't, $ 100 for

Valuation of horse, $ 100

Valuation of horse equipments, $ 100

Remarks: Due $40, first installment Gov't bounty.

Book mark:

Talcuner

(358) *Copyist.*

J | 13 H. Art'y. | U.S.C.T.

Luther Thompson

Sct., Co. B, 13 Reg't U. S. Col'd H. Art'y.

Appears on

Company Muster Roll

for May & June, 1865.

Present or absent Present

Stoppage, $ 100 for

Due Gov't, $ 100 for

Valuation of horse, $ 100

Valuation of horse equipments, $ 100

Remarks: Due first installment Gov't bounty

Book mark:

Falconer

(358) *Copyist.*

I | 13 H. Art'y. | U.S.C.T.

Luther Thompson

Appears with rank of Pvt. on

Muster and Descriptive Roll of a Detachment of U. S. Vols. ~~forwarded~~ organized as Co. B.

for the 13 Reg't U. S. Col'd H. Art'y. Roll dated

Camp Nelson, June 23, 1865.

Where born Union Co. Ky.

Age 19 y'rs; occupation Laborer

When enlisted Jan 20, 1865.

Where enlisted Paducah Ky.

For what period enlisted 3 years.

Eyes Blk; hair Blk

Complexion Blk; height 5 ft. 7 in.

When mustered in Jan 20, 1865.

Where mustered in Paducah Ky

Bounty paid $ 100; due $ ~~100~~

Where credited 1st Dist. Ky.

Company to which assigned B

Remarks:

Book mark:

Magruder

(339) *Copyist.*

of	13 H. Art'y.	U.S.C.T.

Luther Thompson

Sgt., Co. B, 13 Reg't U. S. Col'd H. Art'y.

Appears on

Company Muster Roll

for July & Aug., 1865.

Present or absent Present.

Stoppage, $ 100 for

Due Gov't, $ 100 for

Valuation of horse, $ 100

Valuation of horse equipments, $ 100

Remarks: Due $100, first installment U. S. Gov't bounty.

NEXT ROLL ON FILE MUSTER OUT.

Book mark:

Falconer

(358) *Copyist.*

J | 13 H. Art'y. | U.S.C.T.

Luther Thompson

Pvt., Co. K, 13 Reg't U. S. Col'd H. Art'y.

Appears on **Co. Muster-out Roll,** dated Louisville, Ky., Nov. 18, 1865.

Muster-out to date Nov. 18, 1865.

Last paid to June 30, 1865.

Clothing account:

Last settled ....., 186 ; drawn since $ 100

Due soldier $ ..... 100 ; due U. S. $ 18 29/100

Am't for cloth'g in kind or money adv'd $ 100

Due U. S. for arms, equipments, &c., $ 100

Bounty paid $ 100 100 ; due $ 100

Remarks: Due U. S. for Arms Accts Cost $1.15 (1 gun sling 1 cap pouch, 1 waist belt & 1 cartridge box)

Book mark: .....

Zabriskie

(361) *Copyist.*

Thompson, Luther

L, Co. B, 13 Reg't L I & Mc

1 **Enclosures.**

Bed Cards	Final Statements
Burial Records	Furloughs or L. of A.
Certs. of Dis. for Discharge	Med. Certificates
C. M. Charges	Med. Des. Lists
Descriptive Lists	Orders
Discharge Certificates	Pris. of War Record
Enlistment Papers 1	Resignations

Other papers relating to—

Admission to Hosp'l	Furlough or L. of A.
Casualty Sheet	Med. Examination
Confinement	Misc. Information
Contracts	Pay or Clothing
Death or Effects	Personal Reports
Desertion	Rank
Discharge from Hosp'l	Transfer to Hosp'l
Discharge from Service	Transfer to V. R. C.
Duty	Transportation

NOTE 1.—This blank will be used for enlistments of United States colored troops. They will be made out in duplicate in all cases—one to accompany the recruiting return of the superintendent (not the recruiting officer) to the Adjutant General, and one to accompany the accounts of the officer who pays bounty, &c.

NOTE 2.—An enlistment holds to pay, bounty, pension, &c. A muster-in roll, must in all cases, precede payment of pay, bounty, pension, &c. A muster-in must, in all cases, precede payment of pay, bounty, pension, &c. A muster-in roll, must in all cases, be filed in the Adjutant General's Office as evidence of muster-in. The mustering officer, commissary, or assistant commissary of musters, as the case may be, will countersign both enlistments as having mustered the soldiers into the service of the United States before either of them is given to the disbursing officer.

DECLARATION OF RECRUIT.

I, Luther Thompson of Union Co. Ky. desiring to volunteer as a soldier in the ARMY OF THE UNITED STATES, for the term of *Three Years*, DO DECLARE That I am 19 yr years and 11 months of age; that I have never been discharged from the United States service on account of disability or by sentence of a court-martial, or by order before the expiration of a term of enlistment; and I know of no impediment to my serving honestly and faithfully as a soldier for three years.

GIVEN at Paducah Ky

the 20th day of January 1865

Witness:

F. M. Gilbert

his
Luther × Thompson
mark

Volunteered at Paducah Ky

No. Forty-Seven 65

Jany 20th 1865

By Capt L. M. Morgan

Recruiting Officer

63

Luther Thompson

13745

Consent of Parent or Guardian in case of a Minor, if a Free Man, or in the case of a Slave, of the Person to whom he owes Service:

I, ... DO CERTIFY, That I am

the .....

.....

that the said ..... is ..... years of age; and I do freely give my CONSENT to his volunteering as a SOLDIER in the Army of the United States, for the period of THREE YEARS, under the conditions of the laws of the United States.

GIVEN at .....

the ..... day of .....

Witness:

.....

.....

(A. G. O. No. 74 & 76.)

UNITED STATES COLORED TROOPS ENLISTMENT.

STATE OF Kentucky

TOWN OF Accredited to Union Co Ky

I, Luther Thompson born in Union Co

in the State of Kentucky aged Nineteen years:

and by occupation a Laborer Do HEREBY ACKNOWLEDGE to

have volunteered Twentieth day of January 1865,

to serve as a **Soldier** in the **Army of the United States of America,** for the period of THREE YEARS, unless sooner discharged by proper authority: Do also agree to accept such bounty, pay, rations, and clothing, as are, or may be, established by law for the U. S. colored troops.

And I, Luther Thompson, of Union Co. Ky. do solemnly swear that I will bear true faith and allegiance to the **United States of America,** and that I will serve them honestly and faithfully against all their enemies or opposers whomsoever; and that I will observe and obey the orders of the President of the United States, and the orders of the officers appointed over me, according to the Rules and Articles of War.

Sworn and subscribed to, at Paducah Ky

this 20th day of Jany 1865

Before Jno H. Morgan Capt & Pro Mar 1st Dist Ky

his
Luther + Thompson
mark

I CERTIFY, ON HONOR, That I have carefully examined the above named Volunteer agreeably to the General Regulations of the Army, and that, in my opinion, he is free from all bodily defects and mental infirmity, which would in any way disqualify him from performing the duties of a soldier.

J M Best

EXAMINING SURGEON.

I CERTIFY, ON HONOR, That I have minutely inspected the Volunteer, Luther Thompson previously to his enlistment, and that he was entirely sober when enlisted; that, to the best of my judgment and belief, he is of lawful age; and that, in accepting him as duly qualified to perform the duties of an able-bodied soldier, I have strictly observed the regulations which govern the recruiting service. This soldier has Blk eyes, Blk hair, Blk complexion, is 5 feet 2 1/2 inches high.

RECRUITING OFFICER OR AGENT.

Mustered into the United States Service 20th day of Jany 1865.

Jno H Morgan
Capt Pro Mar & Mustering Officer.
1st Dist Ky

Mustered into the service of the United States, for three years or during the war, from date of enlistment, in Company B

12th Regiment of U.S. Col'd Troops Ky Volunteers, on the 20th day of January, 1865, at Paducah Ky

By Jno H Morgan
Capt & Pro Mar
1st Dist Ky

2069

Thompson. Richard

Co G, 13 U.S.Col'd H. Art'y.

Private | Private

CARD NUMBERS.

1	55184403	26	
2	55180894	27	
3		28	
4		29	
5		30	
6		31	
7		32	
8		33	
9		34	
10		35	
11		36	
12		37	
13		38	
14		39	
15		40	
16		41	
17		42	
18		43	
19		44	
20		45	
21		46	
22		47	
23		48	
24		49	
25		50	

Book Mark:

See also Co Co. 121, 11 S Co Inf.

J | 13 H. Art'y. | U.S.C.T.

Richard Thompson

Pvt., Co. G, 13 Reg't U. S. Col'd H. Art'y.

Appears on

M. and D. Roll of Men Transferred

to the organization named above,

from Co. C, 21 U.S.C.H. Art'y.

Roll dated Camp Nelson, Ky. June 23, 1865.

When enlisted Jan 20, 1865.

Period for which enlisted 3 years.

When mustered in Jan 21, 1865

Present or absent

Company to which assigned

Remarks: Absented March 25. 1865

Name taken up on Roll of Co

since exk

Book mark :

R. Slater

(342) Copyist.

9 | 13 H. Art'y. | U.S.C.T.

Richard Thompson

Pvt., Co. ....., 13 Reg't U. S. Col'd H. Art'y.

Appears on

M. and D. Roll of Men Transferred

to the organization named above,

from Co....., 121 Reg't U. S. Colored Infantry.

Roll dated June 26, 186 6.

When enlisted Jany 20, 186 6

Period for which enlisted 3 years.

When mustered in Jany 21, 186 6

Present or absent .....

Company to which assigned .....

Remarks: Credited to Mason

Co. 9 S. Ky.

Issued May 25, 65.

.....

.....

.....

.....

Book mark : .....

C. Williams,
Copyist.

(342)

2070

Thompson. Robt

Co G, 13 U.S. Col'd H. Art'y.

Private | Private

CARD NUMBERS.

1	55184 04	26	
2	55180 85	27	
3		28	
4		29	
5		30	
6		31	
7		32	
8		33	
9		34	
10		35	
11		36	
12		37	
13		38	
14		39	
15		40	
16		41	
17		42	
18		43	
19		44	
20		45	
21		46	
22		47	
23		48	
24		49	
25		50	

Book Mark:

See also Geo Co. 121. USCT Inf.

T | 13 H. Art'y. | U.S.C.T.

Robert Thompson

Pvt., Co. G., 13 Reg't U. S. Col'd H. Art'y.

Appears on

M. and D. Roll of Men Transferred

to the organization named above,

from Co. C, 21 U.S. Col'd Inft'y

Roll dated Camp Nelson Ky. June 25, 1865.

When enlisted Jan 20, 1865.

Period for which enlisted 3 years.

When mustered in Jan 21, 1865.

Present or absent

Company to which assigned

Remarks: Deserted March 25. 1865

Name taken up on Roll of Co in red ink

Book mark :

Rochester

(342) *Copyist.*

G | 13 H. Art'y. | U.S.C.T.

Robert Thompson

Pvt., Co. ....., 13 Reg't U. S. Col'd H. Art'y.

Appears on

M. and D. Roll of Men Transferred

to the organization named above,

from Co....., 121 Reg't U. S. Colored Infantry.

Roll dated June 26, 1865.

When enlisted Jany 20, 1865.

Period for which enlisted 3 years.

When mustered in Jany 21, 1865.

Present or absent .....

Company to which assigned .....

Remarks: Credited to Mason Co. 9 D. Ky.

Deserted May 25, 65.

Book mark :.....

C. Williams,
Copyist.

(342)

2071

Thompson. Warren

Co F, 13 U.S.Col'd H. Art'y.

Corporal.	Corporal.

CARD NUMBERS.

1	55185 79	26	
2	55179 72	27	
3	55243 15	28	
4	55244 77	29	
5	55246 30	30	
6	91299 818	31	
7		32	
8		33	
9		34	
10		35	
11		36	
12		37	
13		38	
14		39	
15		40	
16		41	
17		42	
18		43	
19		44	
20		45	
21		46	
22		47	
23		48	
24		49	
25		50	

Book Mark:

See also Les D. 12. U.S.C.H.A.

T | 13 H. Art'y. | U.S.C.T.

William Thompson

....., Co. C, 13 Reg't U. S. Col'd H. Art'y.

Appears on

Company Descriptive Book

of the organization named above.

DESCRIPTION.

Age 29 years; height 5 feet 4 inches.

Complexion Light

Eyes Blk ; hair Blk

Where born Memphis, Tenn

Occupation Laborer

ENLISTMENT.

When Feb 5, 1864.

Where Maysville Ky

By whom L. Bushnell, term 3 y'rs.

Remarks: .....

E N Lipscombe

(383*g*) *Copyist.*

9 | 13 H. Art'y. | U.S.C.T.

Warren Thompson

Corp, Co. I, 13 Reg't U. S. Col'd H. Art'y.

Appears on

M. and D. Roll of Men Transferred

to the organization named above,

from Co D 121 U.S.C. Inf

Roll dated Camp Nelson Ky June 23, 1865.

When enlisted 5 Apr, 1865.

Period for which enlisted 3 years.

When mustered in 7 Apr, 1865.

Present or absent not stated

Company to which assigned

Remarks: Appt'd Corp Apr 6/65
Ord'd to Bath Co & Dist to Ky

Book mark :

I Merchant

(342) *Copyist.*

9 | 13 H. Art'y. | U.S.C.T.

Warren Thompson
Corp'l, Co. ....., 13 Reg't U. S. Col'd H. Art'y.

Appears on

M. and D. Roll of Men Transferred

to the organization named above,

from Co....., 121 Reg't U. S. Colored Infantry.

Roll dated June 23, 1865.

When enlisted Apr. 5, 1865.

Period for which enlisted 3 years.

When mustered in Apr. 7, 1865.

Present or absent Not stated

Company to which assigned I

Remarks: Credited to Bath Co. 9 D. Ky.

C. Williams
Copyist.

(342)

D | 13 H. Art'y. | U.S.C.T.

Samuel Thompson

Capt., Co. D, 13 Reg't U. S. Col'd H. Art'y.

Age ..... years.

Appears on

Company Muster Roll*

for to June 30, 1865.

Joined for duty and enrolled:

When Apr. 9, 1865.

Where Maysville Ky

Period 3 years

Mustered in:

When Feb. 9, 1865.

Where Bermuda Hundred Va

Present or absent Present

Stoppage, $ 100 for .....

Due Gov't, $ 100 for .....

Valuation of horse, $ 100

Valuation of horse equipments, $ 100

Remarks: Appointed Corpl Apr 6. 1865

* First current roll. No muster-in roll of this company on file.

Book mark: .....

(3586)

R. Dickel
Copyist.

D | 13 H. Art'y. | U.S.C.T.

Hansen Kierkegaard

Corp'l, Co. I, 13 Reg't U.S. Col'd H. Art'y.

Appears on

Company Muster Roll

for July & Aug., 1865.

Present or absent Present

Stoppage, $ 100 for

Due Gov't, $ 100 for

Valuation of horse, $ 100

Valuation of horse equipments, $ 100

Remarks: Returned Corp'l in the 13th Regt U.S. Cols. T. 1865

NEXT ROLL ON FILE MUSTER OUT.

Book mark:

(358) Copyist.

G | 13 H. Art'y. | U.S.C.T.

Warren Thompson

Corp'l, Co. L, 13 Reg't U. S. Col'd H. Art'y.

Appears on **Co. Muster-out Roll,** dated

Jeffersonville Ind., Nov. 18, 1865.

Muster-out to date Nov. 15, 1865.

Last paid to June 30, 1865.

Clothing account:

Last settled ....., 186 ; drawn since $ 100

Due soldier $ ..... 100; due U. S. $ 16 31/100

Am't for cloth'g in kind or money adv'd $ 100

Due U. S. for arms, equipments, &c., $ 100

Bounty paid $ 100 0/100; due $ 100

Remarks: Appointed Corp'l. in Co. D. 121 Regt Indy. April 1, 1865.

Book mark:

D. A. Clark

(361) Copyist.

2072

Thomson James

Co L, 13 U.S.Col'd H. Art'y.

Private

CARD NUMBERS.

1	26
2	27
3 See Thompson James	28
4	29
5	30
6	31
7	32
8	33
9	34
10	35
11	36
12	37
13	38
14	39
15	40
16	41
17	42
18	43
19	44
20	45
21	46
22	47
23	48
24	49
25	50

Book Mark.

See also

2073

Thornton. Joseph

Co G, 13 U.S.Col'd H. Art'y.

Private	Private

CARD NUMBERS.

1	55-18371	26	
2	55-17948	27	
3	55-23507	28	
4	55-23654	29	
5	55-23801	30	
6	912908 2	31	
7		32	
8		33	
9		34	
10		35	
11		36	
12		37	
13		38	
14		39	
15		40	
16		41	
17		42	
18		43	
19		44	
20		45	
21		46	
22		47	
23		48	
24		49	
25		50	

Book Mark:

See also Co A. 121 U.S.Colrd

F | 13 H. Art'y. | U.S.C.T.

Joseph Thornton

....., Co. G, 13 Reg't U.S. Col'd H. Art'y.

Appears on

Company Descriptive Book

of the organization named above.

DESCRIPTION.

Age 23 years; height 5 feet 3 inches.

Complexion Dark

Eyes Blk; hair Blk

Where born Fleming Co Ky

Occupation Farmer

ENLISTMENT.

When Oct 1, 1864.

Where Mustered Oct 1 '64 Greenupsb'g Ky

By whom Capt W C Grier; term 3 y'rs.

Remarks:

Beck

(383*g*) Copyist.

J | 13 H. Art'y. | U.S.C.T.

Joseph Thornton

Art'y, Co. G, 13 Reg't U. S. Col'd H. Art'y.

Appears on

M. and D. Roll of Men Transferred

to the organization named above,

from Co. A, 12th U.S. Col'd Infty

Roll dated Camp Nelson Ky June 23, 1865.

When enlisted Oct 1, 1864.

Period for which enlisted 3 years.

When mustered in Oct 1, 1864.

Present or absent Not stated

Company to which assigned

Remarks:

Book mark:

Rodenter

(342) *Copyist.*

To | 13 H. Art'y. | U.S.C.T.

Joseph Thornton

Pvt., Co. ....., 13 Reg't U. S. Col'd H. Art'y.

Appears on

M. and D. Roll of Men Transferred

to the organization named above,

from Co....., 121 Reg't U. S. Colored Infantry.

Roll dated June 23, 1865.

When enlisted Oct. 1, 1864.

Period for which enlisted 3 years.

When mustered in Oct. 1, 1864.

Present or absent Not stated

Company to which assigned G

Remarks: Credited to Flemming Co. 9 D. Ky.

Book mark :

C. Williams,

(342) *Copyist.*

J | 13 H. Art'y. | U.S.C.T.

Joseph Thornton

Pvt., Co. G, 13 Reg't U. S. Col'd H. Art'y.

Age ..... years.

Appears on

Company Muster Roll*

for from Jun 23 to 30, 1865.

Joined for duty and enrolled:

When Oct. 1, 1864

Where Greenupsburg, Ky

Period 3 years

Mustered in:

When Oct 1, 1864

Where Greenupsburg, Ky,

Present or absent Present

Stoppage, $ 85/100 for C, & G. E.

Due Gov't, $ 100 for

Valuation of horse, $ 100

Valuation of horse equipments, $ 100

Remarks:

* First current roll. No muster-in roll of this company on file.

Book mark:

W. Anderson

Copyist.

(3586)

J | 13 H. Art'y. | U.S.C.T.

Joseph Thornton

Pvt., Co. G, 13 Reg't U. S. Col'd H. Art'y.

Appears on

Company Muster Roll

for July & Aug., 1865.

Present or absent Present

Stoppage, $ 85/100 for C. & G. &.

Due Gov't, $ 100 for

Valuation of horse, $ 100

Valuation of horse equipments, $ 100

Remarks:

NEXT ROLL ON FILE MUSTER OUT.

Book mark:

H. Anderson

(358) *Copyist.*

I | 13 H. Art'y. | U.S.C.T.

Joseph Thornton

Priv, Co. G, 13 Reg't U. S. Col'd H. Art'y.

Appears on **Co. Muster-out Roll,** dated Louisville, Ky, Nov 18, 1865.

Muster-out to date Nov 18, 1865.

Last paid to June 30, 1865.

Clothing account:

Last settled ....., 186 ; drawn since $ 100

Due soldier $ ..... 100; due U. S. $ 21 05/100

Am't for cloth'g in kind or money adv'd $ 100

Due U. S. for arms, equipments, &c., $ 100

Bounty paid $ 100 00/100; due $ 100

Remarks: Due U S for one lost Tompion, 08.

Book mark: .....

A W Allen

(361) *Copyist.*

2074

Traskel Oscar

Co. I, 13 U.S. Col'd H. Art'y.

Private	Private

CARD NUMBERS.

1	55 1896	26	
2	55 1796	27	
3	55 2443	28	
4	55 2451	29	
5	55 2473	30	
6	9129812	31	
7	661-CT-1881	32	
8		33	
9		34	
10		35	
11		36	
12		37	
13		38	
14		39	
15		40	
16		41	
17		42	
18		43	
19		44	
20		45	
21		46	
22		47	
23		48	
24		49	
25		50	

Book Mark: 661. C.T. 1881

See also Vet E. 121 2456 Inf.

13 H. Art'y. ~~U.S.C.T.~~

Oscar Frankil

....., Co. E, 13 Reg't U. S. Col'd H. Art'y.

Appears on

Company Descriptive Book

of the organization named above.

DESCRIPTION.

Age 21 years; height 5 feet 6 inches.

Complexion Blk

Eyes Blk; hair Blk

Where born Albany Co. N.Y.

Occupation Laborer

ENLISTMENT.

When June 23, 1865.

Where Philadelphia Pa.

By whom Lt. Col. Jennings; term 3 y'rs.

Remarks:

E. F. Sizemore

(383g) **Copyist.**

P | 13 H. Art'y. | U.S.C.T.

Oscar Pruett

P, Co. L, 13 Reg't U. S. Col'd H. Art'y.

Age ..... years.

Appears on

Company Muster Roll*

for to June 30, 1865.

Joined for duty and enrolled:

When May 21, 21, 1865.

Where Maysville Ky

Period 3 years

Mustered in:

When May 21st, 1865.

Where Greenupsburg Ky

Present or absent Present

Stoppage, $ 100 for .....

Due Gov't, $ 100 for .....

Valuation of horse, $ 100

Valuation of horse equipments, $ 100

Remarks: Drew Rs. for C. & G. C. $1.00

* First current roll. No muster-in roll of this company on file.

Book mark: .....

(3586) Copyist.

V | 13 H. Art'y. | U.S.C.T.

Oscar Threakill

Pri., Co. I, 13 Reg't U. S. Col'd H. Art'y.

Appears on

M. and D. Roll of Men Transferred

to the organization named above,

from Co E 121 U S C. Inf

Roll dated Camp Nelson Ky June 23, 1865.

When enlisted 23 May, 1865.

Period for which enlisted 3 years.

When mustered in 24 May, 1865.

Present or absent Not stated

Company to which assigned

Remarks: credit to Mason Co.
9 Dist Ky

Book mark :

A. Alencliment

(342) *Copyist.*

9 | 13 H. Art'y. | U.S.C.T.

Oscar Tweed

Pvt., Co. ....., 13 Reg't U. S. Col'd H. Art'y.

Appears on

M. and D. Roll of Men Transferred

to the organization named above,

from Co....., 121 Reg't U. S. Colored Infantry.

Roll dated June 23, 1865.

When enlisted May 23, 1865.

Period for which enlisted 3 years.

When mustered in May 24, 1865.

Present or absent Not stated

Company to which assigned I

Remarks: Credited to Mason Co. 9 S. Ky

Book mark :

C. Williams,

(342) Copyist.

A | 13 H. Art'y. | U.S.C.T.

Oscar Prescott

Pvt., Co. I, 13 Reg't U. S. Col'd H. Art'y.

Appears on

Company Muster Roll

for Sept & Oct, 1865.

Present or absent Present

Stoppage, $ 100 for

Due Gov't, $ 100 for

Valuation of horse, $ 100

Valuation of horse equipments, $ 100

Remarks:

NEXT ROLL ON FILE MUSTER OUT.

Book mark:

E. F. Hall

(358) Copyist.

G | **13 H. Art'y.** | **U.S.C.T.**

Oscar Knaskel

K, Co. L, 13 Reg't U. S. Col'd H. Art'y.

Appears on **Co. Muster-out Roll,** dated Louisville, Ky, Sept. 18, 1865.

Muster-out to date ....., 186 .

Last paid to June 30, 1865.

Clothing account:

Last settled ....., 186 ; drawn since $.....100

Due soldier $.....100; due U. S. $ 33 69/100

Am't for cloth'g in kind or money adv'd $.....100

Due U. S. for arms, equipments, &c., $.....100

Bounty paid $.....100; due $.....100

Remarks: Absent sick in Post Hosp. Covington Ky. since Sept. 24/65 Not discharged Furnished. Not mustered out with Organization

Book mark: Oct. 1881 — "Died. Oct. 1865"

---

(361) *Copyist.*

JAN. 16 1894
5524738

1863 im Post Hospital D. Concentration Div. of Rec. & Dispensatory" 66, 1. J. 1881.

F. | 13. Ky Cavy | Ufe Troops.

Oscar Thakiel.

----------, Co. I, 13th Reg't Ufe Ky. Cavy

NOTATION.

Book mark: L.B.13.757. 661. C.T. 1881.

War Department,

Adjutant General's Office,

Washington, March 21, 1881.

Died Oct. 1. 1865. in Post Hospital Covington Ky. of Acute Dysentery

A. M. Muzzy.
Copyist.

Thrakil, Oscar

P, Co. D, 13 Reg't U.S.C.H.A.

1 Enclosures.

Bed Cards	Descriptive Lists
Burial Records	Final Statements
Certs. of Dis. for Discharge	Furloughs
C. M. Charges	Med. Des. Lists
Med. Certificates	Orders

Other papers relating to—

Admission to Hosp'l	Furlough
Casualty Sheet (Officer's) /	Med. Examination
Confinement	Misc. Information /
Contracts	Pay or Clothing
Death or Effects	Personal Reports
Desertions	Rank
Discharge from Hosp'l	Transfer to Hosp'l
Discharge from Service	Transfer to V. R. C.
Duty	Transportation

(See 2721 - Ord. S.)

Surgeon General's Office,

Record and Pension Bureau,

Oct. 26th, 1866.

Respectfully returned, to Asst. Adjt. Genl. Taggart, A. D. C.

Information in the case of Oscar Shrackle, Co. "D," 13th U. S. C. A. Art'y, was furnished, by this office, Oct. 24th, 1866, the Post Surgeon at Newport Barracks, Ky., forwarding Surgeon's Effects.

13 Art

By Order of the Surgeon General:

J. J. Woodward.

Brevet Major and Assistant Surgeon, U. S. Army.

2723

014

WAR DEPARTMENT,

ADJUTANT GENERAL'S OFFICE,

WASHINGTON, Oct 19", 1866.

SIR:

Final Statements in the cases of deceased soldiers are required to be sent to the Adjutant General's Office in duplicate, with one copy of the Inventory of Effects. The Descriptive List should also be sent to this Office in cases where the soldier was absent from his Company at the time of his death. Where there were no effects, it should be so stated on a blank Inventory, properly signed.

Certificates of Disability should be sent in duplicate. Special care should be taken that the date of discharge and signature of the discharging officer should be affixed.

No of the Final Statement & No. Inventory, has been received in the case of Oscar Thrailkill, of Co. L, 13 Regiment of U.S. Cavy. Volunteers, whose papers were forwarded to this Office. You will please forward the missing papers without delay.

I have the honor to be, sir,

Very respectfully,

Your obedient servant,

E. D. Townsend

Assistant Adjutant General.

(110)

COMMANDING OFFICER

J. J. Woodward Asst Surg USA.

Information of death taken from Report of Pro of Council of Admn convened at Covington Ky. which states that he died in Post Hospital. Oct. 1st 1865. of Acute Dysentery

D.D.C

CASUALTY SHEET

No. ____ ____

Oscar Thrakill

Pvt of Company D

13 Regiment of U.S. Cavalry

State Volunteers.

NATURE OF CASUALTY.

Died Oct. 1, 1865.

See 3594/66. R&P

CASUALTY SHEET.

Name: Oscar Shaffield

Rank: Pvt Company: D Regiment: 13

Arm: Inf CA Hvy State:

Nature of Casualty: Death.

CAUSE OF CASUALTY—(NAME OF DISEASE, &C.)

Acute Dysentery.

DEGREE OF DISABILITY.

BY WHOM CERTIFIED.

C H Riley

Asst Surg.

DATE OF DISCHARGE, DEATH, &c.

Oct 1st 1865.

PLACE OF DISCHARGE, DEATH, &c.

Post Hospl.

BY WHOM DISCHARGED.

FROM WHAT SOURCE THIS INFORMATION WAS OBTAINED.

Pers Cof adms.

REMARKS.

Abs. Oct. 19/64
Pers Cof adms + P.M.
Rec't for $6 95/100 sent 2d
Auditor

F B McCoy

Clerk.

(170)

Adj. O. Nov. 15. 1865.
Inv. of effects sent
2d Auditor
J.B.

2075

Sibbs. Milton

Co. I, 13 U.S. Col'd H. Art'y.

Private	Private

CARD NUMBERS.

1	5518721	26	
2	5518069	27	
3	5524457	28	
4	5524779	29	
5		30	
6		31	
7		32	
8		33	
9		34	
10		35	
11		36	
12		37	
13		38	
14		39	
15		40	
16		41	
17		42	
18		43	
19		44	
20		45	
21		46	
22		47	
23		48	
24		49	
25		50	

Book Mark: Le B. 13/913

See also Les D. 121. U.S.C.Inf.

9 | 13 H. Art'y. | U.S.C.T.

Milton S Gibbs

R S, Co. C, 13 Reg't U. S. Col'd H. Art'y.

Appears on **Co. Muster-out Roll,** dated Louisville Ky, Nov. 1, 186 5.

Muster-out to date ....., 186 .

Last paid to ....., 186 .

Clothing account:

Last settled ....., 186 ; drawn since $.....100

Due soldier $.....100; due U. S. $.....100

Am't for cloth'g in kind or money adv'd $.....100

Due U. S. for arms, equipments, &c., $ 100

Bounty paid $.....100; due $.....100

Remarks: Paid

See Organization Roll

Book mark: .....

---

(361) *Copyist.*

D | 13 H. Art'y. | U.S.C.T.

Milton Tibbs

Pri., Co. D, 13 Reg't U. S. Col'd H. Art'y.

Appears on

M. and D. Roll of Men Transferred

to the organization named above,

from Co D 121 USC Inf

Roll dated Camp Nelson Ky June 23, 1865.

When enlisted 7 Feb, 1865.

Period for which enlisted 3 years.

When mustered in 9 Feb, 1865.

Present or absent Non Stated

Company to which assigned

Remarks: Died at Hospital at Covington Ky

Book mark :

S. Muchant

(342) *Copyist.*

G | **13** H. Art'y. | **U.S.C.T.**

Milton Tibbs

Pvt., Co. ....., 13 Reg't U. S. Col'd H. Art'y.

Appears on

M. and D. Roll of Men Transferred

to the organization named above,

from Co....., 121 Reg't U. S. Colored Infantry.

Roll dated June 26, 1865.

When enlisted Feb. 7, 186 5.

Period for which enlisted 3 years.

When mustered in Feb. 9, 186 5.

Present or absent .....

Company to which assigned .....

Remarks: Died in Hosp.

Covington, Ky.

Book mark : Died May 4, 1865

— over —

C. Williams,

(342) *Copyist.*

L | **13 H. Art'y.** | **U.S.C.T.**

Milton S Gibbs

R.L., Co. L, 13 Reg't U. S. Col'd H. Art'y.

Age ..... years.

Appears on

Company Muster Roll*

for June 30, 1865.

Joined for duty and enrolled:

When Feb. 9, 1865.

Where Maysville Ky

Period 3 years

Mustered in:

When Feb. 9, 1865.

Where Bremensburg Ky

Present or absent.....

Stoppage, $.....100 for .....

Due Gov't, $.....100 for.....

Valuation of horse, $.....100

Valuation of horse equipments, $.....100

Remarks: Died at Barrington Key March 4th 1865

* First current roll. **No muster-in roll of this company on file.**

Book mark: .....

R. Tilford

(3586) *Copyist.*

2076

Pvt. Samuel

Co C, 13 U.S.Col'd H. Art'y.

Private | Private

CARD NUMBERS.

1	5-5-15-873	26	
2	5-5-16897	27	
3	5-5-21-36	28	
4	5-5-21707	29	
5	5-5-21886	30	
6	5-5-22029	31	
7	91284-3	32	
8		33	
9		34	
10		35	
11		36	
12		37	
13		38	
14		39	
15		40	
16		41	
17		42	
18		43	
19		44	
20		45	
21		46	
22		47	
23		48	
24		49	
25		50	

Book Mark:

See also

J | **13** H. Art'y. | **U.S.C.T.**

David Jones

....., Co. C, 13 Reg't U. S. Col'd H. Art'y.

Appears on

Company Descriptive Book

of the organization named above.

DESCRIPTION.

Age 21 years; height 5 feet 7½ inches.

Complexion Dark

Eyes Dark; hair Black

Where born Kentucky

Occupation Laborer

ENLISTMENT.

When Feb 4, 1865.

Where Paducah Ky

By whom Col Morgan; term 3 y'rs.

Remarks:

Discharged

(383*g*) *Copyist.*

T | **13** H. Art'y. | **U.S.C.T.**

Daniel Tier

Appears with rank of Pvt on

Muster and Descriptive Roll of a Detachment of U. S. Vols. forwarded

for the 13 Reg't U. S. Col'd H. Art'y. Roll dated

Paducah Ky, Feb 27, 1865.

Where born Kentucky

Age 28 y'rs; occupation Laborer

When enlisted Feb. 4, 1865.

Where enlisted Paducah, Ky

For what period enlisted 3 years.

Eyes Black; hair Black

Complexion Black; height 5 ft. 9½ in.

When mustered in Feb. 4, 1865.

Where mustered in Paducah, Ky

Bounty paid $ 100; due $ 100

Where credited Union Dist of Ky

Company to which assigned C

Remarks:

Book mark:

Hammer

(339) *Copyist.*

1 | 13 H. Art'y. | U.S.C.T.

Daniel Grier

Appears with rank of Pvt on

Muster and Descriptive Roll of a Detachment of U. S. Vols. ~~forwarded~~ Organized

for the 13 Reg't U. S. Col'd H. Art'y. Roll dated

Camp Nelson Ky June 7th 1865.

Where born Kentucky

Age 21 y'rs; occupation Laborer

When enlisted Feb. H, 1865.

Where enlisted Paducah, Ky.

For what period enlisted 3 years.

Eyes Black; hair Black

Complexion Black; height 5 ft. 9½ in.

When mustered in Feb. H, 1865.

Where mustered in Paducah Ky

Bounty paid $None 100; due $ 100

Where credited 1 Cong. Dist. Ky

Company to which assigned D

Remarks:

Book mark:

D B Taylor

(339) Copyist.

I | 13 H. Art'y. | U.S.C.T.

Daniel Tice

Pvt., Co. G, 13 Reg't U. S. Col'd H. Art'y.

Age ..... years.

Appears on

Company Muster Roll*

for to Apr 30, 1865.

Joined for duty and enrolled:

When Feb 4, 1865.

Where Paducah Ky

Period 3 years

Mustered in:

When Feb 4, 1865.

Where Paducah Ky

Present or absent Present

Stoppage, $ 100 for .....

Due Gov't, $ 100 for .....

Valuation of horse, $ 100

Valuation of horse equipments, $ 100

Remarks: .....

* First current roll. No muster-in roll of this company on file.

Book mark: .....

Daniel Tice

(3586) *Copyist.*

J | **13** H. Art'y. | **U.S.C.T.**

Daniel Tier

Pt, Co. C, 13 Reg't U. S. Col'd H. Art'y.

Appears on

Company Muster Roll

for May & June, 186 5.

Present or absent Present

Stoppage, $ 100 for

Due Gov't, $ 160/100 for Cr. G. Equipage,

Valuation of horse, $ 100

Valuation of horse equipments. $ 100

Remarks: Due first installment of bounty.

No bounty rec'd

FROM SECOND AUDITOR'S ROLL.

Book mark:

Van Hanken

(358) Copyist.

I | 13 H. Art'y. | U.S.C.T.

Daniel Dair

Pt, Co. C, 13 Reg't U. S. Col'd H. Art'y.

Appears on

Company Muster Roll

for July & Aug, 186 5.

Present or absent Present

Stoppage, $ 100 for

Due Gov't, $ 1 60/100 for for Equipage not paid last muster

Valuation of horse, $ 100

Valuation of horse equipments. $ 100

Remarks: Due first enstal-ment County $100.00

NEXT ROLL ON FILE MUSTER OUT.

Book mark:

Tom Hewitt

(858) Copyist.

F | 13 H. Art'y. | U.S.C.T.

Daniel Tier

Pt, Co. L, 13 Reg't U. S. Col'd H. Art'y.

Appears on **Co. Muster-out Roll,** dated Louisville Ky, Nov 18, 1865.

Muster-out to date Nov 18, 1865.

Last paid to June 30, 1865.

Clothing account:

Last settled ....., 186 ; drawn since $ 100

Due soldier $ ..... 100; due U. S. $ 26 77/100

Am't for cloth'g in kind or money adv'd $ 100

Due U. S. for arms, equipments, &c., $ 100

Bounty paid $ 100 00/100; due $ 100

Remarks: .....

Book mark: .....

Vannatta

(361) *Copyist.*

Tier, Daniel

....., Co. ....., 13 Reg't U S C H A

/ **Enclosures.**

Bed Cards	Final Statements .....
Burial Records	Furloughs or L. of A. .....
Certs. of Dis. for Discharge	Med. Certificates .....
C. M. Charges	Med. Des. Lists .....
Descriptive Lists	Orders .....
Discharge Certificates	Pris. of War Record .....
Enlistment Papers ..... /	Resignations .....

Other papers relating to—

Admission to Hosp'l	Furlough or L. of A. .....
Casualty Sheet	Med. Examination .....
Confinement	Misc. Information .....
Contracts	Pay or Clothing .....
Death or Effects	Personal Reports .....
Desertion	Rank .....
Discharge from Hosp'l	Transfer to Hosp'l .....
Discharge from Service	Transfer to V. R. C. .....
Duty	Transportation .....
.....	.....
.....	.....

NOTE 1.—This blank will be used for enlistments of United States colored troops. They will be made out in duplicate in all cases—one to accompany the recruiting return of the superintendent (not the recruiting officer) to the Adjutant General, and one to accompany the accounts of the officer who pays bounty, &c.

NOTE 2.—An enlistment holds to service. A muster-in must, in all cases, be filed in the Adjutant General's Office as evidence of muster-in. The mustering officer, commissary, or assistant commissary of musters, as the case may be, will countersign both enlistments as having mustered the soldiers into the service of the United States before either of them is given to the disbursing officer.

DECLARATION OF RECRUIT.

I, Daniel Tier of Union Co Ky ..... desiring to volunteer as a soldier in the ARMY OF THE UNITED STATES, for the term of *Three Years*, DO DECLARE That I am 28 ..... years and ..... months of age; that I have never been discharged from the United States service on account of disability or by sentence of a court-martial, or by order before the expiration of a term of enlistment; and I know of no impediment to my serving honestly and faithfully as a soldier for three years.

GIVEN at Paducah Ky .....

the 4th day of Feby 1864

Witness: E K Bradshaw .....

his
Daniel X Tier
mark

No. Ninety Volunteered at Paducah Ky 1864

By Capt Bogan

Paducah Recruiting Station

Dan Tier

Consent of Parent or Guardian in case of a Minor, if a Free Man, or in the case of a Slave, of the Person to whom he owes Service:

I, ... DO CERTIFY, That I am

the ....

....

that the said ..... is .... years of age; and I

do freely give my CONSENT to his volunteering as a SOLDIER in the Army of the United States, for the period of THREE YEARS, under the conditions of the laws of the United States.

GIVEN at .....

the ..... day of .....

Witness:

....

(A. G. O. No. 74 & 76.)

UNITED STATES COLORED TROOPS ENLISTMENT.

STATE OF Kentucky, TOWN OF accredited to Union Co

I, Daniel Tier born in .....

in the State of Kentucky aged Twenty Eight years

and by occupation a Laborer Do HEREBY ACKNOWLEDGE to

have volunteered Fourth day of July 1865,

to serve as a **Soldier** in the **Army of the United States of America,** for the period of THREE YEARS, unless sooner discharged by proper authority: Do also agree to accept such bounty, pay, rations, and clothing, as are, or may be, established by law for the U. S. colored troops.

And I, Daniel Tier of Union Co Ky do solemnly swear that I will bear true faith and allegiance to the **United States of America,** and that I will serve them honestly and faithfully against all their enemies or opposers whomsoever; and that I will observe and obey the orders of the President of the United States, and the orders of the officers appointed over me, according to the Rules and Articles of War.

Sworn and subscribed to, at Paducah Ky

this 4th day of July 1865

Before J. H. Morgan Capt & A.A.G. Mar'd Dist Ky

his
Daniel X Tier
mark

I CERTIFY, ON HONOR, That I have carefully examined the above named Volunteer agreeably to the General Regulations of the Army, and that, in my opinion, he is free from all bodily defects and mental infirmity, which would in any way disqualify him from performing the duties of a soldier.

I M Bust

EXAMINING SURGEON.

I CERTIFY, ON HONOR, That I have minutely inspected the Volunteer Dan'l Tier previously to his enlistment, and that he was entirely sober when enlisted; that, to the best of my judgment and belief, he is of lawful age; and that, in accepting him as duly qualified to perform the duties of an able-bodied soldier, I have strictly observed the regulations which govern the recruiting service. This soldier has Blk. *eyes,* Blk. *hair,* Blk. *complexion,* is 5 *feet* 9 1/2 *inches* high.

.....

RECRUITING OFFICER OR AGENT.

Mustered into the United States Service 4th day of July 1865.

Jas H Morgan Capt & A.A.G. Mar'd *Mustering Officer.*
Dist Ky

Mustered into the service of the United States, for three years or during the war, from date of enlistment, in Company .....

Regiment of U.S. Colored Volunteers, on the 4th day of July, 1865, at Paducah Ky

By J. H. Morgan Capt & A.A.G.

Recruiting Officer.

Tillisten. Emilus 3077

Co L, 13 U.S.Col'd H.Art'y.

Sergeant. | Sergeant.

CARD NUMBERS.

1	55192455	26	
2	55191335	27	
3	55250855	28	
4	55252344	29	
5	55253844	30	
6	91245530	31	
7		32	
8		33	
9		34	
10		35	
11		36	
12		37	
13		38	
14		39	
15		40	
16		41	
17		42	
18		43	
19		44	
20		45	
21		46	
22		47	
23		48	
24		49	
25		50	

Book Mark:

See also Co L. 72 U.S.C.H.Art'y.

L | 13 H. Art'y. | U.S.C.T.

Company Filliston

....., Co. L, 13 Reg't U. S. Col'd H. Art'y.

Appears on

Company Descriptive Book

of the organization named above.

DESCRIPTION.

Age 17 years; height 5 feet 4 inches.

Complexion Copper

Eyes Dk; hair Dk

Where born Kentucky

Occupation Farmer

ENLISTMENT.

When Dec. 10, 1864.

Where Owensboro Ky

By whom Capt Lucas; term 1 y'rs.

Remarks: Substitute

E H Schmidt

(383*g*) **Copyist.**

9 | 13 H. Art'y. | U.S.C.T.

Ennules Tibbetson

Sgt, Co. L, 13 Reg't U. S. Col'd H. Art'y.

Appears on

M. and D. Roll of Men Transferred

to the organization named above,

from Co C 72 U S C Inf

Roll dated Camp Nelson Ky July 3, 1865

When enlisted ....., 186 .

Period for which enlisted 1 years.

When mustered in Dec 10, 1864.

Present or absent Not stated

Company to which assigned .....

Remarks: Corp since Jan 13/65

Sergt since Feb 18/65

Detch from R G Artin 2 Dist Ky

Book mark : .....

S Merchant

Copyist.

9 | 13 H. Art'y. | U.S.C.T.

Erastus Tillotson

Sgt, Co....., 13 Reg't U. S. Col'd H. Art'y.

Appears on

M. and D. Roll of Men Transferred

to the organization named above,

from 72 U.S.C.T.

Roll dated July 3, 1865.

When enlisted ....., 186 .

Period for which enlisted ..... 1 years.

When mustered in Dec 10, 1864.

Present or absent not stated

Company to which assigned L

Remarks:

2 Dist. Sky
Sub. for N. G. Orton

Book mark :

J Underwood

(342) *Copyist.*

I | 13 H. Art'y. | U.S.C.T.

Emanley Fillotson

Sergt., Co. L, 13 Reg't U. S. Col'd H. Art'y.

Age ..... years.

Appears on

Company Muster Roll*

for to June 30, 1865.

Joined for duty and enrolled:

When ....., 186 .

Where .....

Period ..1.. years

Mustered in:

When Dec 10, 1864.

Where Owensboro, Ky

Present or absent Present

Stoppage, $.....100 for .....

Due Gov't, $.....100 for .....

Valuation of horse, $.....100

Valuation of horse equipments, $.....100

Remarks: Appointed Sergeant F. Feb. 18. 1865. Substitute

* First current roll. No muster-in roll of this company on file.

Book mark: .....

Leger

(858b) Copyist.

5 | 13 H. Art'y. | U.S.C.T.

Emulus Tillotson

Sergt, Co. L, 13 Reg't U. S. Col'd H. Art'y.

Appears on

Company Muster Roll

for July & Aug, 1865.

Present or absent Absent

Stoppage, $ 100 for

Due Gov't, $ 100 for

Valuation of horse, $ 100

Valuation of horse equipments, $ 100

Remarks: Sergt Jan 18/65.
To and W. U. C. Inf.
Absent sick in Gen Hosp
Camp Nelson Ky.

NEXT ROLL ON FILE MUSTER OUT.

Book mark:

Sergt

(358) Copyist.

F | **13** H. Art'y. | **U.S.C.T.**

Emanuel Fullisten

Sergt, Co. L, 13 Reg't U. S. Col'd H. Art'y.

Appears on **Co. Muster-out Roll,** dated Louisville Ky Nov 18, 1865.

Muster-out to date Nov 18, 1865.

Last paid to June 30, 1865.

Clothing account:

Last settled ....., 186 ; drawn since $ 100

Due soldier $ ..... 100 ; due U. S. $ 100

Am't for cloth'g in kind or money adv'd $ 16 44 100

Due U. S. for arms, equipments, &c., $ 100

Bounty paid $ ..... 100 ; due $ 100

Remarks: Wpht a Sergt Feb 13/65

Book mark :

---

(361) *Copyist.*

2078.

Tillistern Henry

Co. L. 13 U. S. Cold'd H. Art'y

Private	Private

REFERENCE ENVELOPE.

Cards filed with

Tatterton Henry

Correct name of Soldier.

2079

Tillman, Alexander

Co H, 13 U.S.Col'd H. Art'y.

Private	Private

CARD NUMBERS.

1	55 1856 1	26	
2	55 1806 7	27	
3	55 24297	28	
4		29	
5		30	
6		31	
7		32	
8		33	
9		34	
10		35	
11		36	
12		37	
13		38	
14		39	
15		40	
16		41	
17		42	
18		43	
19		44	
20		45	
21		46	
22		47	
23		48	
24		49	
25		50	

Book Mark:

See also Co B. 121. U.S. Col'd Inf

7 | 13 H. Art'y. | U.S.C.T.

Alexander Tillman

A.T., Co. H, 13 Reg't U. S. Col'd H. Art'y.

Appears on

M. and D. Roll of Men Transferred

to the organization named above,

from Co. B, 121 Reg't U. S. Colored Infantry.

Roll dated Camp Nelson, Ky. June 23, 1865.

When enlisted Dec 28, 1864.

Period for which enlisted 3 years.

When mustered in Dec 30, 1864.

Present or absent

Company to which assigned

Remarks: Died Dec. 17, 1864

Final Statements Forwarded

Book mark :

Recruiter

(342) *Copyist.*

9 | 13 H. Art'y. | U.S.C.T.

Alexander Tillman
Pvt., Co. ....., 13 Reg't U. S. Col'd H. Art'y.

Appears on

M. and D. Roll of Men Transferred

to the organization named above,

from Co....., 121 Reg't U. S. Colored Infantry.

Roll dated June 26, 186 5

When enlisted Nov. 28, 186 4.

Period for which enlisted 3 years.

When mustered in Nov. 30, 186 4.

Present or absent .....

Company to which assigned .....

Remarks: Credited to Flem-
ming Co. Ky.
Died Dec. 7, 65.

Book mark : .....

L. Williams,
Copyist.

(342)

5th Ky. U. S. C. T.

Alexander Tillman

Pvt, Co. K, 13 Reg't U. S. Col'd Inf't

Appears on **Co. Muster-out Roll,** dated

Louisville Ky, Nov 18, 1865.

Muster-out to date ....., 186 .

Last paid to ....., 186 .

Clothing account:

Last settled ....., 186 ; drawn since $.....100

Due soldier $.....100; due U. S. $.....100

Am't for cloth'g in kind or money adv'd $.....100

Due U. S. for arms, equipments, &c., $.....100

Bounty paid $.....100 due $.....100

Remarks: Died

At home on furlough

Book mark: See original Roll

(361) *Copyist.*

2081

Tillman, John

Co G, 13 U.S.Col'd H. Art'y.

Private | Private

CARD NUMBERS.

1	18372	26	
2	17949	27	
3	23508	28	
4	23655	29	
5	23802	30	
6	912983	31	
7		32	
8		33	
9		34	
10		35	
11		36	
12		37	
13		38	
14		39	
15		40	
16		41	
17		42	
18		43	
19		44	
20		45	
21		46	
22		47	
23		48	
24		49	
25		50	

Book Mark:

See also Co A. 121. USCT Inf.

S. 60 6053 P. a 44 -

J. H. Emmons & Co.

G | 13 H. Art'y. | U.S.C.T.

John Tilman

....., Co. G, 13 Reg't U. S. Col'd H. Art'y.

Appears on

Company Descriptive Book

of the organization named above.

DESCRIPTION.

Age 33 years; height 5 feet 1 inches.

Complexion Dark

Eyes Blk; hair Blk

Where born Fleming Co. Ky.

Occupation Farmer

ENLISTMENT.

When Oct 1, 1864.

mustered Oct 1 '64.

Where Greensburg Ky.

By whom Capt W C Estes; term 3 y'rs.

Remarks:

W Beck

(383g) Copyist.

J | 13 H. Art'y. | U.S.C.T.

John Tilman

Pvt., Co. G, 13 Reg't U. S. Col'd H. Art'y.

Appears on

M. and D. Roll of Men Transferred

to the organization named above,

from Co. A, 2d Ky Col'd Inf'y

Roll dated Camp Nelson, Ky. June 23, 1865.

When enlisted Oct 1, 1864.

Period for which enlisted 3 years.

When mustered in Oct 1, 1864.

Present or absent Not stated

Company to which assigned

Remarks:

Book mark:

Geo Sexton

(342) *Copyist.*

G | **13** H. Art'y. | **U.S.C.T.**

John Fillmore

Pvt., Co. ....., 13 Reg't U. S. Col'd H. Art'y.

Appears on

M. and D. Roll of Men Transferred

to the organization named above,

from Co....., 121 Reg't U. S. Colored Infantry.

Roll dated June 26, 1865

When enlisted Oct. 1, 1864

Period for which enlisted 3 years.

When mustered in Oct. 1, 1864

Present or absent Not stated

Company to which assigned G

Remarks: Credited to Flem-
ming Co. Ky.

C Williams

Copyist.

G | 13 H. Art'y. | U.S.C.T.

John Tilman

Pvt., Co. G, 13 Reg't U. S. Col'd H. Art'y.

Age ..... years.

Appears on

Company Muster Roll*

for from June 23 to 30, 1865.

Joined for duty and enrolled:

When Oct. 1, 1864.

Where Greencastle, Ky.

Period 3 years

Mustered in:

When Oct. 1, 1864

Where Greencastle, Ky.

Present or absent Present

Stoppage, $3 22/100 for C. & C. E.

Due Gov't, $ 00/100 for

Valuation of horse, $ 00/100

Valuation of horse equipments, $ 00/100

Remarks:

* First current roll. No muster-in roll of this company on file.

Book mark:

(358*b*)

W. Anderson

Copyist.

P | **13** H. Art'y. | **U.S.C.T.**

John Pilman

Pvt., Co. G, 13 Reg't U. S. Col'd H. Art'y.

Appears on

Company Muster Roll

for July & Aug., 1865.

Present or absent Present

Stoppage, $ 3 87/100 for C. & G. E.

Due Gov't, $ 100 for

Valuation of horse, $ 100

Valuation of horse equipments, $ 100

Remarks:

NEXT ROLL ON FILE MUSTER OUT.

Book mark:

W. Anderson

(358) Copyist.

I | 13 H. Art'y. | U.S.C.T.

John Tillman

Priv, Co. G, 13 Reg't U. S. Col'd H. Art'y.

Appears on **Co. Muster-out Roll,** dated Louisville, Ky, Nov 18, 1865.

Muster-out to date Nov 18, 1865.

Last paid to June 30, 1865.

Clothing account:

Last settled ....., 186 ; drawn since $ 100

Due soldier $ ..... 100; due U. S. $ 31 27/100

Am't for cloth'g in kind or money adv'd $ 100

Due U. S. for arms, equipments, &c., $ 100

Bounty paid $ 100 00/100; due $ 100

Remarks: Due U S for ord lost Tompion, 08. Car Box Plate, 13=, 21, for CC & G Equipage 1 canteen 65.

Book mark: .....

a w allen

(361) *Copyist.*

2081

Tillotson Emulus

Co L., 13 U.S.Col'd H. Art'y.

Sergeant

CARD NUMBERS.

1		26	
2	See Tillotson	27	Emulus
3		28	
4		29	
5		30	
6		31	
7		32	
8		33	
9		34	
10		35	
11		36	
12		37	
13		38	
14		39	
15		40	
16		41	
17		42	
18		43	
19		44	
20		45	
21		46	
22		47	
23		48	
24		49	
25		50	

Book Mark:

See also

2085

Tillotson Henry

Co L, 13 U.S.Col'd H. Art'y.

Private

CARD NUMBERS.

1	26
2	27
3 See Tillotson Henry	28
4	29
5	30
6	31
7	32
8	33
9	34
10	35
11	36
12	37
13	38
14	39
15	40
16	41
17	42
18	43
19	44
20	45
21	46
22	47
23	48
24	49
25	50

Book Mark:

See also

2083

Tinsley George

Co. E, 13 U.S. Col'd H. Art'y.

Private	Corporal.

CARD NUMBERS.

1	5-5-1-5-7-5-8	26	
2	5-5-1-6-5-9-2	27	
3	5-5-2-0-6-5-9	28	
4	5-5-2-0-8-1-4	29	
5	5-5-2-0-9-4-0	30	
6	5-5-2-1-0-9-5	31	
7	5-5-2-1-2-4-3	32	
8	9-1-2-8-2-2-3	33	
9		34	
10		35	
11		36	
12		37	
13		38	
14		39	
15		40	
16		41	
17		42	
18		43	
19		44	
20		45	
21		46	
22		47	
23		48	
24		49	
25		50	

Book Mark:

See also

D. 7356.58 R.O. aff
D. 956569 R.O. affts
D. 1607311 R.O. affts
S-1716631 R.O. aff
D 1774116 R.O. affts
D 178323 / R.O. affts
D2910291 Ans ND
D2958910 Ans ND

J. K. Mussend Esq

I | 13 H. Art'y. | U.S.C.T.

George Simley

....., Co. B, 13 Reg't U. S. Col'd H. Art'y.

Appears on

Company Descriptive Book

of the organization named above.

DESCRIPTION.

Age 23 years; height 5 feet 7½ inches.

Complexion Yellow

Eyes Hazel; hair Black

Where born Caldwell Co Ky

Occupation Farmer

ENLISTMENT.

When Jany 2d, 1863.

Where Paducah Ky

By whom Capt Morgan; term 3 y'rs.

Remarks: .....

Deadrick

(383*g*) **Copyist.**

T | **13** H. Art'y. | **U.S.C.T.**

George Tinsley

Appears with rank of Pvt on

Muster and Descriptive Roll of a Detachment of U. S. Vols. forwarded

for the 13 Reg't U. S. Col'd H. Art'y. Roll dated

Paducah Ky, Jan 20, 1865.

Where born Caldwell Co. Ky

Age 23 y'rs; occupation Farmer

When enlisted Jany 20, 1865.

Where enlisted Paducah Ky

For what period enlisted 3 years.

Eyes Hazel; hair Black

Complexion yellow; height 5 ft. 7½ in.

When mustered in Jany 20, 1865.

Where mustered in

Bounty paid $ 100; due $ 100

Where credited Caldwell Co. 1 Dist of Ky

Company to which assigned B

Remarks:

Book mark:

Hammer

(339) *Copyist.*

F | **13 H. Art'y.** | **U.S.C.T.**

George Sizemore

Appears with rank of Corpl on

Muster and Descriptive Roll of a Detachment of U. S. Vols. forwarded

Co. B.

for the 13 Reg't U. S. Col'd H. Art'y. Roll dated

Camp Nelson June 23, 1865.

Where born Caldwell Co. Ky.

Age 23 y'rs; occupation Farmer

When enlisted Jan 20, 1865.

Where enlisted Paducah, Ky.

For what period enlisted 3 years.

Eyes Hazel; hair Blk

Complexion Yellow; height 5 ft. 7½ in.

When mustered in Jan. 20, 1865.

Where mustered in Paducah, Ky.

Bounty paid $ 100; due $ 100

Where credited 1st Ky. Dist.

Company to which assigned B

Remarks:

Book mark:

(339) Copyist.

J | 13 H. Art'y. | U.S.C.T.

George Tinsley

Corp., Co. B, 13 Reg't U. S. Col'd H. Art'y.

Age ..... years.

Appears on

Company Muster Roll*

for Enlistment to Feb. 28, 1865.

Joined for duty and enrolled:

When ..... Jan. 20 ....., 1865.

Where Paducah, Ky.

Period 3 years

Mustered in:

When ..... Jan. 20 ....., 1865.

Where ..... Paducah, Ky. .....

Present or absent Present.

Stoppage, $ 100 for .....

Due Gov't, $ 100 for .....

Valuation of horse, $ 100

Valuation of horse equipments, $ 100

Remarks: Appointed Corp. Jan. 22, '65. Due $40.00 1st

(over)

* First current roll. No muster-in roll of this company on file.

Book mark: .....

Falconer

Copyist.

JAN. 16 1891 ☆ 5520659

installment Govt
bounty.

S | 13 H. Art'y. | U.S.C.T.

George Sims Coy

Capt., Co. B, 13 Reg't U. S. Col'd H. Art'y.

Appears on

Company Muster Roll

for March & April, 1865.

Present or absent Present.

Stoppage, $ ..... 100 for .....

.....

.....

Due Gov't, $ ..... 100 for .....

.....

Valuation of horse, $ 100

Valuation of horse equipments, $ 100

Remarks: Appointed Capt. Jan. 25, '65. Due $40, first instalment. Gist County

.....

.....

.....

.....

.....

Book mark: .....

.....

Volunteer

(358) *Copyist.*

C | 13 H. Art'y. | U.S.C.T.

George Tinsley

Corp., Co. B, 13 Reg't U. S. Col'd H. Art'y.

Appears on

Company Muster Roll

for May & June, 1865.

Present or absent Present.

Stoppage, $ ..... 100 for .....

.....

Due Gov't, $ ..... 100 for .....

.....

Valuation of horse, $ 100

Valuation of horse equipments, $ 100

Remarks: Appointed Corp. Jan. 25, 65; Due first installment Gov't bounty.

.....

.....

.....

.....

Book mark: .....

Falconer

(358) *Copyist.*

J | 13 H. Art'y. | U.S.C.T.

George Tinsley

bugle, Co. B, 13 Reg't U. S. Col'd H. Art'y.

Appears on

Company Muster Roll

for July & Aug, 1865.

Present or absent Present

Stoppage, $ 100 for

Due Gov't, $ 100 for

Valuation of horse, $ 100

Valuation of horse equipments, $ 100

Remarks: Appointed bugle Jan. 25, '65; pen S. O. Jan. 25. Due $100, first installment U. S. Govt County

NEXT ROLL ON FILE MUSTER OUT.

Book mark:

Falconer

(358) *Copyist.*

J | 13 H. Art'y. | U.S.C.T.

George Tinsley

Corp., Co. B, 13 Reg't U. S. Col'd H. Art'y.

Appears on **Co. Muster-out Roll,** dated

Louisville, Ky., Nov. 18, 1865.

Muster-out to date Nov. 1k., 1865.

Last paid to June 30, 1865.

Clothing account:

Last settled ....., 186 ; drawn since $ 100

Due soldier $ ..... 6 16/100; due U. S. $ 100

Am't for cloth'g in kind or money adv'd $ 100

Due U. S. for arms, equipments, &c., $ 100

Bounty paid $ 100 100; due $ 100

Remarks: Apptd. Corp. Jan. 25. '65. Due difference of pay between private and Corp. from date of appointment to June 23'65.

Book mark: .....

Falconer

(361) *Copyist.*

Tinsley, George

F, Co. B, 13 Reg't USCHA

/ **Enclosures.**

Bed Cards	Final Statements
Burial Records	Furloughs or L. of A.
Certs. of Dis. for Discharge	Med. Certificates
C. M. Charges	Med. Des. Lists
Descriptive Lists	Orders
Discharge Certificates	Pris. of War Record
Enlistment Papers /	Resignations

Other papers relating to—

Admission to Hosp'l	Furlough or L. of A.
Casualty Sheet	Med. Examination
Confinement	Misc. Information
Contracts	Pay or Clothing
Death or Effects	Personal Reports
Desertion	Rank
Discharge from Hosp'l	Transfer to Hosp'l
Discharge from Service	Transfer to V. R. C.
Duty	Transportation

NOTE 1.—This blank will be used for enlistments of United States colored troops. They will be made out in duplicate in all cases—one to accompany the recruiting return of the superintendent (not the recruiting officer) to the Adjutant General, and one to accompany the accounts of the officer who pays bounty, &c.

NOTE 2.—An enlistment holds to service. A muster-in must, in all cases, precede payment of pay, bounty, pension, &c. A muster-in roll, must in all cases, be filed in the Adjutant General's Office as evidence of muster-in. The mustering officer, commissary of musters, or assistant commissary of musters, as the case may be, will countersign both enlistments as having mustered the soldiers into the service of the United States before either of them is given to the disbursing officer.

DECLARATION OF RECRUIT.

I, George Tensley of Caldwell Co Ky ..... desiring to volunteer as a soldier in the ARMY OF THE UNITED STATES, for the term of *Three Years*, DO DECLARE That I am 23 ..... years and ..... months of age; that I have never been discharged from the United States service on account of disability or by sentence of a court-martial, or by order before the expiration of a term of enlistment; and I know of no impediment to my serving honestly and faithfully as a soldier for three years.

GIVEN at Paducah Ky .....

the 20 ..... day of ..... Sept 1863 .....

Witness:

F. M. Gilliland .....

George his Tensley
mark

Enlisted at Paducah Ky

Sept 20 1863

No. 5

Twenty-Eight Regt

Capt K Corps Afro Am Vol

By .....

Consent of Parent or Guardian in case of a Minor, if a Free Man, or in the case of a Slave, of the Person to whom he owes Service:

I, ... DO CERTIFY, That I am

the .....

.....

that the said ..... is ..... years of age; and I

do freely give my CONSENT to his volunteering as a SOLDIER in the Army of the United States, for the period of THREE YEARS, under the conditions of the laws of the United States.

GIVEN at .....

the ..... day of .....

Witness:

.....

.....

(A. G. O. No. 74 & 76.)

UNITED STATES COLORED TROOPS ENLISTMENT.

STATE OF Ky TOWN OF Accredited to

I, George Tinsley born in Caldwell Co

in the State of Ky aged 23 years

and by occupation a Farmer Do HEREBY ACKNOWLEDGE to

have volunteered 20 day of January 1865,

to serve as a **Soldier** in the **Army of the United States of America,** for the period of THREE YEARS, unless sooner discharged by proper authority: Do also agree to accept such bounty, pay, rations, and clothing, as are, or may be, established by law for the U. S. colored troops.

And I, George Tinsley, of Caldwell Co. Ky. do solemnly swear that I will bear true faith and allegiance to the **United States of America,** and that I will serve them honestly and faithfully against all their enemies or opposers whomsoever; and that I will observe and obey the orders of the President of the United States, and the orders of the officers appointed over me, according to the Rules and Articles of War.

Sworn and subscribed to, at Paducah Ky
this 20 day of Jany 1865
Before Capt Jno H. Morgan

George his X Tinsley
mark

I CERTIFY, ON HONOR, That I have carefully examined the above named Volunteer agreeably to the General Regulations of the Army, and that, in my opinion, he is free from all bodily defects and mental infirmity, which would in any way disqualify him from performing the duties of a soldier.

[redacted]
J M Best EXAMINING SURGEON.

I CERTIFY, ON HONOR, That I have minutely inspected the Volunteer, Geo. Tinsley previously to his enlistment, and that he was entirely sober when enlisted; that, to the best of my judgment and belief, he is of lawful age; and that, in accepting him as duly qualified to perform the duties of an able-bodied soldier, I have strictly observed the regulations which govern the recruiting service. This soldier has Hazel *eyes*, Dk *hair*, yellow *complexion*, is 5 *feet* 7 1/2 *inches* high.

RECRUITING OFFICER OR AGENT.

Mustered into the United States Service 20 day of Jany 186 5

Jno. H. Morgan
Capt & Post Qmr Mustering Officer.
1st Dist of Ky

Mustered into the service of the United States, for three years or during the war, from date of enlistment, in Company B
1st U.S.C. Cavalry Regiment of Volunteers, on the 20 day of Jany, 1865, at Paducah Ky
Capt & Post Qmr Brackett
1st Dist of Ky

2084 William G.
Tinsley William F.

Co a, 13 U.S.Col'd H. Art'y.

Private	Private

CARD NUMBERS.

1	5-5-1 6 5-1 9	26	
2	5-5-1 9 8 3 9	27	
3	5-5-1 9 9 7 7	28	
4	5-5-2 0 1 0 6	29	
5	5-5-2 0 2 5-8	30	
6	5-5-2 0 4 2 5-	31	
7	5-5-2 0 5 6 9	32	
8	9 1 2 8 0 5-7	33	
9	4 3 1 3 6 0 0 1	34	
10		35	
11		36	
12		37	
13		38	
14		39	
15		40	
16		41	
17		42	
18		43	
19		44	
20		45	
21		46	
22		47	
23		48	
24		49	
25		50	

Book Mark:

See also

S-968062 Record
S 975-977 Sec and Rel
S-976622-D.O Int-In
A.in-L. form to E Page
9/27/24 ✓
C.2.L. prepared 2-11-26. Done

J. K. Thorsen Clerk

I | 13 H. Art'y. | U.S.C.T.

William T Tinsley

....., Co. A, 13 Reg't U.S. Col'd H. Art'y.

Appears on

Company Descriptive Book

of the organization named above.

DESCRIPTION.

Age 18 years; height 5 feet 9 3/4 inches.

Complexion Brown

Eyes Brown; hair Blk

Where born Caldwell Co Kentucky

Occupation Farmer

ENLISTMENT.

When Oct 20, 1864.

Where Bowling Green

By whom Capt Hobson; term 3 y'rs.

Remarks: .....

Deserted

(383*y*) *Copyist.*

13 N a. Inf.

Wm Thomas Tinsley

Appears with rank of Pvt on

Muster and Descriptive Roll

of a Detachment of U.S. Colored recruits forwarded for 13 Regt U.S. Colored H Arty. Roll dated Bowling Green Ky, Oct 31, 1864.

Where born Caldwell Co Ky.

Age 18 years; occupation Farmer

When enlisted Oct 17, 1864.

Where enlisted B. Green Ky

For what period enlisted 3 years.

Eyes brown; hair dk

Complexion brown; height 5 ft 9 3/4 in.

When mustered in ____, 186 .

Where mustered in ____

Bounty paid $ ____ 100; due $ ____ 100

Clothing account:

Last settled ____, 186 ; drawn since $ 48 30/100

Date of first muster Octr 20, 1864.

Company to which assigned ____

Remarks: New recruit Caldwell Co. sworn Service to William Tinsley

Book mark: ____

By b Wm

(356m) Copyist.

I | 13 H. Art'y. | U.S.C.T.

William F. Finsley

Appears with rank of Pvt. on

Muster and Descriptive Roll of a Detachment of U. S. Vols. ~~forwarded~~ Returned as Loc. A.

for the 13 Reg't U. S. Col'd H. Art'y. Roll dated

Camp Nelson, Ky, June 23, 1865.

Where born Lockport, Ky.

Age 18 y'rs; occupation Farmer

When enlisted Oct. 20, 1864.

Where enlisted B. Green, Ky.

For what period enlisted 3 years.

Eyes Brown; hair Blk

Complexion Brown; height 5 ft. 2¾ in.

When mustered in Oct. 20, 1864.

Where mustered in B. Green Ky.

Bounty paid $ 100; due $ 100

Where credited

Company to which assigned Co. A.

Remarks:

Book mark:

(339) Copyist.

F | 13 H. Art'y. | U.S.C.T.

William F. Tinsley

Priv., Co. A, 13 Reg't U. S. Col'd H. Art'y.

Age ..... years.

Appears on

Company Muster Roll*

for 30 Dec 31, 186 4.

Joined for duty and enrolled:

When Oct. 20, 186 4.

Where Bowling Green Ky

Period 3 years

Mustered in:

When Oct. 20, 186 4.

Where Bowling Green Ky

Present or absent Present

Stoppage, $ 100 for .....

Due Gov't, $ 100 for .....

Valuation of horse, $ 100

Valuation of horse equipments, $ 100

Remarks: .....

* First current roll. No muster-in roll of this company on file.

Book mark: .....

W. O. Hughes

(3586) Copyist.

I | 13 H. Art'y. | U.S.C.T.

William T Ginsley

Pvt, Co. A, 13 Reg't U. S. Col'd H. Art'y.

Appears on

Company Muster Roll

for Jan & Feb, 186 5.

Present or absent Present

Stoppage, $ 100 for

Due Gov't, $ 100 for

Valuation of horse, $ 100

Valuation of horse equipments, $ 100

Remarks: Due $40 first installment of Gov't Bounty

Book mark:

W. T. Ginsley

(358) Copyist.

G | 13 H. Art'y. | U.S.C.T.

William T. Tinsley

Priv., Co. A, 13 Reg't U. S. Col'd H. Art'y.

Appears on

Company Muster Roll

for Mch & Apr, 186 5.

Present or absent Present

Stoppage, $ 100 for

Due Gov't, $ 100 for

Valuation of horse, $ 100

Valuation of horse equipments, $ 100

Remarks:

Book mark:

W. T. Hughes

(358) *Copyist.*

F | 13 H. Art'y. | U.S.C.T.

William F. Finley

Pvt, Co. A, 13 Reg't U. S. Col'd H. Art'y.

Appears on

Company Muster Roll

for May & June, 186 5.

Present or absent Present

Stoppage, $ 1 30/100 for Clo & Cap

Due Gov't, $ 100 for

Valuation of horse, $ 100

Valuation of horse equipments, $ 100

Remarks: 1st Installment Bounty due

FROM SECOND AUDITOR'S ROLL.

Book mark:

W. F. Hughes

(358) Copyist.

F | 13 H. Art'y. | U.S.C.T.

William G. Tinsley

Pvt., Co. A, 13 Reg't U. S. Col'd H. Art'y.

Appears on

Company Muster Roll

for July & Aug, 186 4

Present or absent Present

Stoppage, $ 100 for

Due Gov't, $ 100 for

Valuation of horse, $ 100

Valuation of horse equipments, $ 100

Remarks: Due 1st Installment
Gov Bounty $100

NEXT ROLL TO FILE MUSTER OUT.

Book mark:

W. J. Hughes

(358) Copyist.

F | **13** H. Art'y. | **U.S.C.T.**

William T. Tinsley

Priv., Co. A, 13 Reg't U. S. Col'd H. Art'y.

Appears on **Co. Muster-out Roll,** dated Louisville Ky, Nov 18, 186 5.

Muster-out to date Nov 18, 186 5.

Last paid to June 30, 186 5.

Clothing account:

Last settled ....., 186 ; drawn since $ 100

Due soldier $ ..... 100; due U. S. $ 12 58/100

Am't for cloth'g in kind or money adv'd $ 100

Due U. S. for arms, equipments, &c., $ 100

Bounty paid $ 100 00/100; due $ 100

Remarks: .....

Book mark: .....

W. T. Hughes

(361) *Copyist.*

Private Unit

Q, Co. —, Reg't 118th

1 Enclosures.

Bed Cards	Final Statements
Burial Records	Furloughs or L. of A
Certs. of Dis. for Discharge	Med. Certificates
C. M. Charges	Med. Des. Lists
Descriptive Lists	Orders
Discharge Certificates	Pris. of War Record
Enlistment Papers 1	Resignations

Other papers relating to—

Admission to Hosp'l	Furlough or L. of A
Casualty Sheet	Med. Examination
Confinement	Misc. Information
Contracts	Pay or Clothing
Death or Effects	Personal Reports
Desertion	Rank
Discharge from Hosp'l	Transfer to Hosp'l
Discharge from Service	Transfer to V. R. C.
Duty	Transportation

DECLARATION OF RECRUIT.

I, *William Thomas Dorsey* ..... desiring

to volunteer as a soldier in the ARMY OF THE UNITED STATES, for the term of *Three Years*,

DO DECLARE That I am *18* ..... years and ..... months of age; that I have

never been discharged from the United States service on account of disability or by sentence of a

court-martial, or by order before the expiration of a term of enlistment; and I know of no

impediment to my serving honestly and faithfully as a soldier for three years.

GIVEN at *Boone Co Gunny Ky* .....

the *21st* ..... day of *October 1864*.

Witness:

A G Gibson Capt & Pro. Mar.
3d Dist. Ky & Cavg. Office

William Thomas Dorsey
his mark

No. *1118*

Volunteered at Boone Co Ky

October 20th 1864

By .....

.....

.....

Consent of Parent or Guardian in case of a Minor, if a Free Man, or in the case of a Slave, of the Person to whom he owes Service:

I, ... DO CERTIFY, That I am

the .....

.....

that the said ..... is ..... years of age; and I

do freely give my CONSENT to his volunteering as a SOLDIER in the Army of the United States,

for the period of THREE YEARS, under the conditions of the laws of the United States.

GIVEN at .....

the ..... day of .....

Witness:

.....

.....

(A. G. O. No. 74 & 76.)

NOTE 1.—This blank will be used for enlistments of United States colored troops. They will be made out in duplicate in all cases—one to accompany the recruiting return of the superintendent (not the recruiting officer) to the Adjutant General, and one to accompany the accounts of the officer who pays bounty, &c.

NOTE 2.—An enlistment holds to service. A muster-in must, in all cases, be filed in the Adjutant General's Office as evidence of muster-in. The mustering officer, commissary, or assistant commissary of musters, as the case may be, will countersign both enlistments as having mustered the soldiers into the service of the United States before either of them is given to the disbursing officer.

UNITED STATES COLORED TROOPS ENLISTMENT.

STATE OF Kentucky TOWN OF Bowling Green

I, William Thos. Finley born in Caldwell Co.

in the State of Kentucky aged Eighteen years

and by occupation a Farmer Do HEREBY ACKNOWLEDGE to

have volunteered Twentieth day of October 1864

to serve as a **Soldier** in the **Army of the United States of America,** for the period of THREE YEARS, unless sooner discharged by proper authority: Do also agree to accept such bounty, pay, rations, and clothing, as are, or may be, established by law for the U. S. colored troops.

And I, William Thomas Finley

do solemnly swear that I will bear true faith and allegiance to the **United States of America,** and that I will serve them honestly and faithfully against all their enemies or opposers whomsoever; and that I will observe and obey the orders of the President of the United States, and the orders of the officers appointed over me, according to the Rules and Articles of War.

Sworn and subscribed to, at Bowling Green

this 20th day of Oct. 1864 William Thomas (his) Finley mark

Before A Gibson Capt 1st Pio. Mus

B Dist. Ky Rec'g Office

I CERTIFY, ON HONOR, That I have carefully examined the above named Volunteer agreeably to the General Regulations of the Army, and that, in my opinion, he is free from all bodily defects and mental infirmity, which would in any way disqualify him from performing the duties of a soldier.

J R Bailey

EXAMINING SURGEON.

I CERTIFY, ON HONOR, That I have minutely inspected the Volunteer William Thos. Finley previously to his enlistment, and that he was entirely sober when enlisted; that, to the best of my judgment and belief, he is of lawful age; and that, in accepting him as duly qualified to perform the duties of an able-bodied soldier, I have strictly observed the regulations which govern the recruiting service. This soldier has Brown *eyes*, Black *hair*, Brown *complexion*, is Five *feet* Five *inches* high.

A Gibson Capt 1st Pio. Mus. Vol

B Dist. Ky RECRUITING OFFICER OR AGENT.

Mustered into the United States Service 20 day of Oct. 1864

A G Wilson Capt 1st Pio. Mus.

B Dist. Ky *Mustering Officer.*

Mustered into the service of the United States, for three years or during the war, from date of enlistment, in Company ..... Regiment of ..... Volunteers, on the ..... day of ....., 186 , at .....

2085

Todd. George

Co. K., 13 U.S.Col'd H. Art'y.

Private	Private

CARD NUMBERS.

1	55 18217	26	
2	55 17974	27	
3	55 24904	28	
4	55 25039	29	
5	97793772	30	
6		31	
7		32	
8		33	
9		34	
10		35	
11		36	
12		37	
13		38	
14		39	
15		40	
16		41	
17		42	
18		43	
19		44	
20		45	
21		46	
22		47	
23		48	
24		49	
25		50	

Book Mark:

See also Leo G. 121. U.S.C.H.A.

13 H. Art'y. | U.S.C.T.

George Todd

....., Co. K, 13 Reg't U. S. Col'd H. Art'y.

Appears on

Company Descriptive Book

of the organization named above.

DESCRIPTION.

Age 18 years; height 5 feet 5 inches.

Complexion Blk

Eyes Blk; hair Blk

Where born Madison Co. Ky

Occupation Laborer

ENLISTMENT.

When May 22, 1865.

Where Maysville Ky

By whom Capt. Knapp, term 3 y'rs.

Remarks:

E A Lipscombe

(383*g*) **Copyist.**

7 | 13 H. Art'y. | U.S.C.T.

George Todd

Pvt, Co. K, 13 Reg't U. S. Col'd H. Art'y.

Appears on

M. and D. Roll of Men Transferred

to the organization named above,

from Co. G. 121

Roll dated Camp Nelson, Ky. June 23, 1865.

When enlisted May 22, 1865.

Period for which enlisted 3 years.

When mustered in June 5, 1865.

Present or absent Not stated

Company to which assigned

Remarks:

Book mark :

Rochester

(342) *Copyist.*

F | 13 H. Art'y. | U.S.C.T.

George Todd

Priv., Co. ....., 13 Reg't U. S. Col'd H. Art'y.

Appears on

M. and D. Roll of Men Transferred

to the organization named above,

from Co....., 121 Reg't U. S. Colored Infantry.

Roll dated June 23, 1865

When enlisted May 22, 1865

Period for which enlisted 3 years.

When mustered in June 5, 1865

Present or absent Not stated

Company to which assigned K.

Remarks: Credited to Madison Co. 8 S. Ky.

Book mark :

C. Williams,

(342) *Copyist.*

f | 13 H. Art'y. | U.S.C.T.

George Todd

Pvt, Co. K, 13 Reg't U. S. Col'd H. Art'y.

Age ..... years.

Appears on

Company Muster Roll*

for June 30, 1865.

Joined for duty and enrolled:

When May 22, 1865.

Where Maysville Ky.

Period 3 years

Mustered in: FROM SECOND AUDITOR'S ROLL.

NEXT ROLL ON FILE MUSTER OUT.

When June 5, 1865.

Where Greensburg Ky.

Present or absent Not stated

Stoppage, $ 100 for .....

Due Gov't, $ 100 for .....

Valuation of horse, $ 100

Valuation of horse equipments, $ 100

Remarks: Transferred from

121 U.S.C.T.

* First current roll. No muster-in roll of this company on file.

Book mark: .....

Galligan

(358*b*) Copyist.

F | 13 H. Art'y. | U.S.C.T.

George Todd

Pvt, Co. K, 13 Reg't U. S. Col'd H. Art'y.

Appears on **Co. Muster-out Roll,** dated Louisville Ky., Nov. 18, 1865.

Muster-out to date Nov. 18, 1865.

Last paid to June 30, 1865.

Clothing account:

Last settled ....., 186 ; drawn since $ 100

Due soldier $ ..... 100 ; due U. S. $ 49 47/100

Am't for cloth'g in kind or money adv'd $ 100

Due U. S. for arms, equipments, &c., $ 100

Bounty paid $ ..... 100 ; due $ 100

Remarks: .....

.....

.....

.....

.....

.....

Book mark: .....

Galligan

(361) *Copyist.*

2086

Todd Jerry

Co D, 13 U.S.Col'd H. Art'y.

Inmate	Inmate

CARD NUMBERS.

1	55/7239	26	
2	553320 4	27	
3	552235-8	28	
4	552250 7	29	
5	9/28605	30	
6		31	
7		32	
8		33	
9		34	
10		35	
11		36	
12		37	
13		38	
14		39	
15		40	
16		41	
17		42	
18		43	
19		44	
20		45	
21		46	
22		47	
23		48	
24		49	
25		50	

Book Mark:

See also

0245-4770 mid grd.

	13 H. Art'y.	U.S.C.T.

Jerry Ford

....., Co. D, 13 Reg't U. S. Col'd H. Art'y.

Appears on

Company Descriptive Book

of the organization named above.

DESCRIPTION.

Age 44 years; height 5 feet 6 inches.

Complexion Blk

Eyes Blk; hair Black

Where born Shelby Co Kentucky

Occupation Labour

ENLISTMENT.

When May 9, 186 3.

Where Lebanon Ky

By whom Capt Fields; term 3 y'rs.

Remarks:

Deadrick

(383*g*) *Copyist.*

I | 13 H. Art'y. | U.S.C.T.

Denny Judd

Appears with rank of Pvt on

Muster and Descriptive Roll of a Detachment of U. S. Vols. ~~forwarded~~ Organized

for the 13 Reg't U. S. Col'd H. Art'y. Roll dated

Nov 20 1865, 186 .

Where born Shelby Co Kentucky

Age 44 yrs; occupation Laborer

When enlisted May 29, 1865.

Where enlisted Lebanon, Ky,

For what period enlisted 3 years.

Eyes Blk; hair Blk

Complexion Copper, height 5 ft. 6 in.

When mustered in May 29, 1865.

Where mustered in Lebanon, Ky,

Bounty paid $ 100; due $ 100

Where credited

Company to which assigned K

Remarks:

Book mark: I 1594 Ky

Taylor

Copyist.

J | 13 H. Art'y. | U.S.C.T.

Jerry Todd

Appears with rank of ..... on

Muster and Descriptive Roll of a Detachment of U. S. Vols. forwarded

for the 13 Reg't U. S. Col'd H. Art'y. Roll dated

Lebanon Ky. May 31, 1865.

Where born Shelby Ky.

Age 44 y'rs; occupation Laborer

When enlisted May 29, 1865.

Where enlisted Lebanon Ky.

For what period enlisted 3 years.

Eyes Blk; hair Blk

Complexion Cop.; height 5 ft. 6 in.

When mustered in May 29, 1865

Where mustered in Lebanon Ky.

Bounty paid $ 100; due $ 100

Where credited .....

Company to which assigned .....

Remarks: Owners Name - Thos. Smith, Residence Shelby. Without Consent.

.....

Book mark: .....

Harris

(339) *Copyist.*

F | 13 | 11 | U.S.C.T.

Isaac Todd

Pvt, Co. D, 13 Reg't U. S. Col'd Inf.

Appears on

Company Muster Roll

for May & June, 1865.

Present or absent Present

Stoppage, $ 100 for

Due Gov't, $ 100 for

Valuation of horse, $ 100

Valuation of horse equipments, $ 100

Remarks: Has served one
(1) Year in Co. D 13th Reg't
U.S.C.T. and Joined
Above Co.

FROM SECOND AUDITOR'S ROLL.

NEXT ROLL ON FILE MUSTER OUT.

Book mark:

Isaac

(358) *Copyist.*

T. | **13 H. Art'y.** | **U.S.C.T.**

Jerry Todd

Pvt., Co. D, 13 Reg't U. S. Col'd H. Art'y.

Appears on **Co. Muster-out Roll,** dated Louisville Ky, Nov 18, 186 5.

Muster-out to date Nov 18, 186 5.

Last paid to June 30, 186 5.

Clothing account:

Last settled ....., 186 ; drawn since $ 100

Due soldier $ ..... 100 ; due U. S. $ 100

Am't for cloth'g in kind or money adv'd $ 7 36 100

Due U. S. for arms, equipments, &c., $ 100

Bounty paid $ 100 00 100 ; due $ 100

Remarks: Postage for Transportation $3.38

Book mark: A1574 Ky P.V. 30 P 18.74

Roger

(361) *Copyist.*

Todd, Jerry

P, Co. D, 13 U.S.C.H.A. Regt.

4 **Enclosures.**

Bed Cards	Descriptive Lists
Burial Records	Final Statements
Certs. of Dis. for Discharge	Furloughs
C. M. Charges	Med. Des. Lists
Med. Certificates	Orders

Other papers relating to—

Admission to Hosp'l	Furlough
Casualty Sheet (Officer's)	Med. Examination
Confinement	Misc. Information /
Contracts	Pay or Clothing
Death or Effects	Personal Reports
Desertions	Rank
Discharge from Hosp'l	Transfer to Hosp'l
Discharge from Service	Transfer to V. R. C.
Duty	Transportation

MICROFILM PUBLICATION M 1834

COMPILED MILITARY SERVICE RECORDS
OF VOLUNTEER UNION SOLDIERS WHO SERVED WITH
THE UNITED STATES COLORED TROOPS (USCT)
13TH REGIMENT OF HEAVY ARTILLERY

PERSONAL PAPERS' TARGET SHEET

PLEASE NOTE THE CHECKED INFORMATION ABOUT THE PERSONAL PAPERS IN THIS FILE:

☐ NO PERSONAL PAPERS WERE FOUND IN THIS FILE WHEN THE RECORDS WERE ARRANGED FOR MICROFILMING.

☑ 2 PERSONAL PAPER(S) FOUND IN THIS FILE WHEN THE RECORDS WERE ARRANGED FOR MICROFILMING.

DECLARATION OF RECRUIT.

I, Jerry Todd ..... desiring to volunteer as a soldier in the ARMY OF THE UNITED STATES, for the term of *Three Years*, DO DECLARE That I am 44 years and —— months of age; that I have never been discharged from the United States service on account of disability or by sentence of a court-martial, or by order before the expiration of a term of enlistment; and I know of no impediment to my serving honestly and faithfully as a soldier for three years.

GIVEN at Columbiana O.

the 25th day of March 65

Witness:

Geo. Hunsicker

his
Jerry × Todd
mark

Volunteered at Columbiana O.

No. 8 Wild Army

By Lieut

1865

Thomas Shryock
Enlisted with Private out Guard.

Consent of Parent or Guardian in case of a Minor, if a Free Man, or in the case of a Slave, of the Person to whom he owes Service:

I, ... DO CERTIFY, That I am

the .....

.....

that the said..... is..... years of age; and I do freely give my CONSENT to his volunteering as a SOLDIER in the Army of the United States, for the period of THREE YEARS, under the conditions of the laws of the United States.

GIVEN at .....

the ..... day of .....

Witness:

.....

.....

(A. G. O. No. 74 & 76.)

NOTE 1.—This blank will be made out in duplicate in all cases—one to accompany the return of the superintendent (not the recruiting officer) to the Adjutant General, and one to accompany the accounts of the officer who pays bounty, &c.

NOTE 2.—An enlistment boigs to service. A muster-in must, in all cases, precede payment of pay, bounty, pension, &c. A muster-in roll, must in all cases, be filed in the Adjutant General's Office as evidence of muster-in. The mustering officer, commissary, or assistant commissary of musters, as the case may be, will countersign both enlistments as having mustered the soldiers into the service of the United States before either of them is given to the disbursing officer.

UNITED STATES COLORED TROOPS ENLISTMENT.

STATE OF Kentucky TOWN OF Lebanon

I, Jerry Todd born in Shelby Co in the State of Ky aged 44 years and by occupation a Laborer Do HEREBY ACKNOWLEDGE to have volunteered 29th day of May 1865, to serve as a **Soldier** in the **Army of the United States of America,** for the period of THREE YEARS, unless sooner discharged by proper authority: Do also agree to accept such bounty, pay, rations, and clothing, as are, or may be, established by law for the U. S. colored troops.

And I, Jerry Todd do solemnly swear that I will bear true faith and allegiance to the **United States of America,** and that I will serve them honestly and faithfully against all their enemies or opposers whomsoever; and that I will observe and obey the orders of the President of the United States, and the orders of the officers appointed over me, according to the Rules and Articles of War.

Sworn and subscribed to, at Lebanon
this 29th day of May 1865
Before M Hulse Capt & A.A. Mustering Officer

his Jerry Todd mark

I CERTIFY, ON HONOR, That I have carefully examined the above named Volunteer agreeably to the General Regulations of the Army, and that, in my opinion, he is free from all bodily defects and mental infirmity, which would in any way disqualify him from performing the duties of a soldier.

John C Maxwell

EXAMINING SURGEON.

I CERTIFY, ON HONOR, That I have minutely inspected the Volunteer,..... previously to his enlistment, and that he was entirely sober when enlisted; that, to the best of my judgment and belief, he is of lawful age; and that, in accepting him as duly qualified to perform the duties of an able-bodied soldier, I have strictly observed the regulations which govern the recruiting service. This soldier has Blk. *eyes*, Blk *hair*, Cop. *complexion*, is 5 *feet* 9 *inches* high.

M Hulse
Capt & A.A. Mus

RECRUITING OFFICER OR AGENT.

Mustered into the United States Service 29 day of May 1865.

M Hulse
Capt & A.A. Mus *Mustering Officer.*

Mustered into the service of the United States, for three years or during the war, from date of enlistment, in Company ..... Regiment of ..... Volunteers, on the ..... day of ....., 186 , at .....

War Department,

ADJUTANT GENERAL'S OFFICE,

Washington, Mar 7 1867.

Respectfully returned to the Commission for the State of Kentucky with the information that Jerry Todd was enlisted at Lebanon Ky May 29 1865 and was mustered in as private in Co D. 13th " U.S.C. Arty Ky. May 29 1865.

S. 1594 Ky

[signature]

Asst. Adj't General.

BAB.

No. 1594

APPLICATION OF

Thomas L. Smith

OF

Shelby County Ky

FOR COMPENSATION FOR SLAVE,

Named Jerry Todd

Enlisted _____ 186_,

In Com. D, 13 Regiment,

U. S. COLORED TROOPS.

Received Febry 1, 186 7.

Compensation Awarded

_____, 186_.

_____ Dollars.

_____

President of Board of Claims.

Claimant's Attorney,

M. C. Taylor,

Shelbyville Ky

Claimant's Post-office Address,

Shelbyville

Kentucky

FRANKFORT COMMONWEALTH PRINT.

No. .....

CLAIM OF

Thomas L Smith

FOR THE COMPENSATION OF SLAVE NAMED

Jenny Todd

I, Thomas L Smith a loyal citizen, and a resident of ....., County of Shelby, State of Kentucky, hereby claim compensation, under the provisions of Section 24, act approved February 24, 1864, and section 2, act approved July, 28, 1866, for my slave Jenny Todd, enlisted ....., 186 5, at Kentucky, by ..... in the 13th regiment U. S. Colored Troops, Co. D; certificate of which enlistment, and a descriptive list, as required, accompany this application. That I did not acquire said slave subsequent to said enlistment, but had a valid title to him at the date of said enlistment, and previous thereto: I having acquired my title to him and my ownership over him as follows, to-wit: That he inherited said Jenny Todd from the estate of his father John B Smith dec'd in the year 1855 and has held said Slave from that date in his possession as his property until he enlisted in the United States Army—

In proof of my loyalty to the Constitution and Government of the United States, I present the accompanying oath, which I have taken, signed and acknowledged; to be filed with this application, in accordance with requirement of General Orders, No. 329, 1863, War Department, Adjutant General's Office.

Thomas L Smith

Dec 20th, 1866.

OATH OF ALLEGIANCE.

I, Thomas L Smith, the owner and Claimant, do solemnly swear that the foregoing claim is a just and true claim due to me as master and owner of the said slave, and that the facts alleged in said claim in respect to the draft or enlistment (as the case may be) of said slave into the Military service of the United States are true. And I do further swear that I have never joined, or been concerned in, any insurrection or rebellion; that I have never borne arms against the United States; that I have never given any aid, countenance, counsel or encouragement to any person or persons engaged, or whom I had reason to believe were about to engage, in insurrection, rebellion or armed hostility against the United States; that I have neither sought, nor accepted, nor attempted to exercise the functions of any office, civil or military, nor to perform any service whatever, under any authority or pretended authority in hostility to the United States; that I have not yielded a voluntary support to any insurrection, rebellion or pretended government, authority, power or constitution within the United States hostile thereto. And I do further swear that, to the best of my knowledge and ability, I have supported and defended, and will continue to support and defend, the United States against all enemies, foreign and domestic; and that I have supported, defended and obeyed, and will continue to support, defend and obey, the Constitution and laws of the United States; that I will bear true faith and allegiance to the same; and that I take this oath freely, without any mental reservation or purpose of evasion: So help me God.

Thomas L Smith

Sworn to and subscribed before me, at Shelby Ville Ky, this 20th day of December, 1866.

John E, Kenrale N, P,
for Shelby Co Kentucky

PROOF OF OWNERSHIP.

STATE OF KENTUCKY, }
COUNTY OF Shelby } SS.

We James K Logan and John H Davis each of lawful age, and resident citizens of the State and County aforesaid, do certify that Thomas L Smith of the State and County aforesaid, was on the day of 186 5, the lawful owner of the slave named Jany Todd; referred to and described in the foregoing claim for compensation.

James K Logan
John H Davis

Sworn to and subscribed before me a Notary Public for the County of Shelby State of Kentucky, this the 20th day of December 1866.

John E, Denrale N.P.

5 CENT STAMP.

PROOF OF LOYALTY.

STATE OF KENTUCKY, }
COUNTY OF Shelby } SS.

We Geo A Armstrong and James H Neale loyal men and each of lawful age, and resident citizens of the town of Shelbyville & Neighborhood in the State and County aforesaid, upon our oaths declare that we have known Thomas L Smith a resident of the State and County aforesaid, since the 4th day of March, 1861, and know that he has firmly and faithfully maintained his or her adherence and allegiance to the Government of the United States, by defending its cause against the Government and forces of the so-called Confederate States of America, in all suitable and practicable ways, and according to his or her ability and opportunity.

Geo A Armstrong
Jas H Neale
John H Davis Notary Public

Sworn to and subscribed before me a Notary Public for the county of Shelby State of Kentucky, this the 20th day of December 186 6.

John E Denrale N.P.

5 CENT STAMP.

POWER OF ATTORNEY.

My Post-Office address is Shelbyville County of Shelby State of Kentucky, and I hereby direct that all communications to me, touching this claim, be sent under cover to M L Taylor Shelbyville Ky, who is hereby appointed and constituted my true and lawful attorney, to prosecute this claim for me, and who is hereby authorized and empowered to receive and receipt for any award, order, draft, certificate, voucher, warrant, papers or money that may be issued in the adjustment of this claim, or the payment thereof, the same as I might or could do in person were I present and acting for myself, and to file any additional evidence or papers that may be required in the prosecution of this claim.

[WITNESS.]

The owner signs here. } Thomas L Smith

James K Logan

Two witnesses to owner's signature sign here. } S. A. Williams

Acknowledged before me 20th December 1866
John E, Denrale N.P.
for Shelby Co Kentucky

3087

Todd, Legrand

Co D, 13 U.S.Col'd H. Art'y.

Private	Private

CARD NUMBERS.

1	5-5-17240	26	
2	5-5-33205-	27	
3	5-5-22359	28	
4	5-5-2252-08	29	
5	912866	30	
6		31	
7		32	
8		33	
9		34	
10		35	
11		36	
12		37	
13		38	
14		39	
15		40	
16		41	
17		42	
18		43	
19		44	
20		45	
21		46	
22		47	
23		48	
24		49	
25		50	

Book Mark:

See also

S 817367- Road
S. 18<18782/0 Ins. Nos. Rds
S-2910751 Aud. #-10
D2961424 and #D

J. H. Truesdell Co.

I | 13 H. Art'y. | U.S.C.T.

Sgrand Todd

....., Co. D, 13 Reg't U. S. Col'd H. Art'y.

Appears on

Company Descriptive Book

of the organization named above.

DESCRIPTION.

Age 34 years; height 5 feet 5 1/2 inches.

Complexion Blk

Eyes Blk; hair Blk

Where born Shelby Co Kentucky

Occupation Laborer

ENLISTMENT.

When May 29, 1865.

Where Lebanon Ky

By whom Cap Fiddler; term 3 y'rs.

Remarks: .....

.....

(383*g*) *Copyist.*

13 H. Art'y. | U.S.C.T.

Sgrand Todd

Appears with rank of Pvt on

Muster and Descriptive Roll of a Detachment of U. S. Vols. ~~forwarded~~ Organized

for the 13 Reg't U. S. Col'd H. Art'y. Roll dated

Not Dated, , 186 .

Where born Shelby Co. Kentucky

Age 34 yrs; occupation Laborer

When enlisted May 29, 1863.

Where enlisted Lebanon, Ky.

For what period enlisted 3 years.

Eyes Blk; hair Blk,

Complexion Blk; height 5 ft. 6 1/2 in.

When mustered in May 29, 1863.

Where mustered in Lebanon, Ky.

Bounty paid $ 100; due $ 100

Where credited

Company to which assigned K

Remarks:

Book mark: S 1593 Ky

Blaylock

(339) Copyist.

I | 13 H. Art'y. | U.S.C.T.

Legrand Todd

Appears with rank of ..... on

Muster and Descriptive Roll of a Detachment of U. S. Vols. forwarded

for the 13 Reg't U. S. Col'd H. Art'y. Roll dated

Lebanon Ky. May 31, 1865.

Where born Shelby Ky.

Age 34 y'rs; occupation Laborer

When enlisted May 29, 1865.

Where enlisted Lebanon Ky.

For what period enlisted 3 years.

Eyes Blk; hair Blk

Complexion Cop; height 5 ft. 8½ in.

When mustered in May 29, 1865.

Where mustered in Lebanon Ky.

Bounty paid $ 100; due $ 100

Where credited .....

Company to which assigned .....

Remarks: Owners Name – Thos. Smith, Residence, Shelby. – Without Consent

.....

.....

Book mark: .....

.....

Harris

(339) *Copyist.*

F V3110 | U.S.C.T

Leonard Todd

Pvt., Co. D, 13 Reg't U. S. Col'd H.A.

Appears on

Company Muster Roll

for May & June, 1865.

Present or absent Present

Stoppage, $ 100 for

Due Gov't, $ 100 for

Valuation of horse, $ 100

Valuation of horse equipments, $ 100

Remarks: Has received one (1) Bounty. Due 2nd installment 1 year Bounty.

FROM SECOND AUDITOR'S ROLL.

NEXT ROLL ON FILE MUSTER OUT.

Book mark:

Leyet

(358) *Copyist.*

5 | 13 H. Art'y. | U.S.C.T.

Sergeant Todd

Pvt., Co. D, 13 Reg't U. S. Col'd H. Art'y.

Appears on **Co. Muster-out Roll,** dated Louisville Ky, Nov 18, 186 5.

Muster-out to date Nov 18, 1865.

Last paid to June 30, 186 5.

Clothing account:

Last settled ....., 186 ; drawn since $ 100

Due soldier $ ..... 100; due U. S. $ 100

Am't for cloth'g in kind or money adv'd $ 21 38/100

Due U. S. for arms, equipments, &c., $ 100

Bounty paid $ 100 100; due $ 100

Remarks: .....

.....

.....

.....

.....

.....

Book mark: A. 1593 Ky 2019. 1880

D

Elder

(361) *Copyist.*

Todd. Legrand

P. O., Co. D, 13 U.S.C.H.A. Reg't

2 Enclosures.

Bed Cards	Descriptive Lists
Burial Records	Final Statements
Certs. of Dis. for Discharge	Furloughs
C. M. Charges	Med. Des. Lists
Med. Certificates	Orders

ER 1

Other papers relating to—

Admission to Hosp'l	Furlough
Casualty Sheet (Officer's)	Med. Examination
Confinement	Misc. Information
Contracts	Pay or Clothing
Death or Effects	Personal Reports
Desertions	Rank
Discharge from Hosp'l	Transfer to Hosp'l
Discharge from Service	Transfer to V. R. C.
Duty	Transportation

Ephlev 2/25/10
WRB

DECLARATION OF RECRUIT.

I, Legrand Todd, ... desiring to volunteer as a soldier in the ARMY OF THE UNITED STATES, for the term of *Three Years*, DO DECLARE That I am 34 years and ..... months of age; that I have never been discharged from the United States service on account of disability or by sentence of a court-martial, or by order before the expiration of a term of enlistment; and I know of no impediment to my serving honestly and faithfully as a soldier for three years.

GIVEN at Vicksburg Miss.

the 25th day of May 1865

Witness:

W. C. Lawrence

Legrand his X Todd
(mark)

Volunteered at Vicksburg Miss.

No. .....

By Capt. Wm. C. Lawrence

18 .....

Legrand Todd

Consent of Parent or Guardian in case of a Minor, if a Free Man, or in the case of a Slave, of the Person to whom he owes Service:

I, ... DO CERTIFY, That I am

the .....

.....

that the said ..... is ..... years of age; and I do freely give my CONSENT to his volunteering as a SOLDIER in the Army of the United States, for the period of THREE YEARS, under the conditions of the laws of the United States.

GIVEN at .....

the ..... day of .....

Witness:

.....

.....

NOTE 1.—This blank will be used for enlistments of United States colored troops. They will be made out in duplicate in all cases—one to accompany the recruiting return of the superintendent (not the recruiting officer) to the Adjutant General, and one to accompany the accounts of the officer who pays bounty, &c.

NOTE 2.—An enlistment holds to service. A muster-in must, in all cases, precede payment of pay, bounty, pension, &c. A muster-in roll, must in all cases, be filed in the Adjutant General's Office as evidence of muster-in. The mustering officer, commissary, or assistant commissary of musters, as the case may be, will countersign both enlistments as having mustered the soldiers into the service of the United States before either of them is given to the disbursing officer.

(A. G. O. Nos. 74 & 78.)

Carrollton Ky Shelby Co Ky

UNITED STATES COLORED TROOPS ENLISTMENT.

STATE OF Kentucky TOWN OF Lebanon

I, Legrand Todd born in Shelby Co

in the State of Ky aged 34 years

and by occupation a Laborer Do HEREBY ACKNOWLEDGE to

have volunteered 25th day of May 1865,

to serve as a **Soldier** in the **Army of the United States of America,** for the period of THREE YEARS, unless sooner discharged by proper authority: Do also agree to accept such bounty, pay, rations, and clothing, as are, or may be, established by law for the U. S. colored troops.

And I, Legrand Todd

do solemnly swear that I will bear true faith and allegiance to the **United States of America,** and that I will serve them honestly and faithfully against all their enemies or opposers whomsoever; and that I will observe and obey the orders of the President of the United States, and the orders of the officers appointed over me, according to the Rules and Articles of War.

Sworn and subscribed to, at Lebanon

this 25th day of May 1865

Before W M Hoover
Capt & Pro Mar 4th Dist Ky.

Legrand his X Todd
mark

I CERTIFY, ON HONOR, That I have carefully examined the above named Volunteer agreeably to the General Regulations of the Army, and that, in my opinion, he is free from all bodily defects and mental infirmity, which would in any way disqualify him from performing the duties of a soldier.

John C Maxwell

EXAMINING SURGEON.

I CERTIFY, ON HONOR, That I have minutely inspected the Volunteer,..... previously to his enlistment, and that he was entirely sober when enlisted; that, to the best of my judgment and belief, he is of lawful age; and that, in accepting him as duly qualified to perform the duties of an able-bodied soldier, I have strictly observed the regulations which govern the recruiting service. This soldier has Blk. *eyes*, Blk. *hair*, Dk. *complexion*, is 5 *feet* 8½ *inches* high.

W M Hoover
Capt & Pro Mar

RECRUITING OFFICER OR AGENT.

Mustered into the United States Service 29 day of May 1865

W M Hoover
Capt & Pro Mar
Mustering Officer.

Mustered into the service of the United States, for three years or during the war, from date of enlistment, in Company ..... Regiment of ..... Volunteers, on the ..... day of ....., 186 , at .....

No. .....

CLAIM OF

Thomas L Smith

FOR THE COMPENSATION OF SLAVE NAMED

Legrand Todd

I, Thomas L Smith a loyal citizen, and a resident of ....., County of Shelby, State of Kentucky, hereby claim compensation, under the provisions of Section 24, act approved February 24, 1864, and section 2, act approved July, 28, 1866, for my slave Legrand Todd, enlisted ....., 186 5, at Kentucky, by ..... in the 13th regiment U. S. Colored Troops, Co. D; certificate of which enlistment, and a descriptive list, as required, accompany this application. That I did not acquire said slave subsequent to said enlistment, but had a valid title to him at the date of said enlistment, and previous thereto: I having acquired my title to him and my ownership over him as follows, to-wit: That he inherited said Legrand Todd from the estate of his father I Thos B Smith dec'd in the year 18 5 and has held said Slave from that date in his possession as his property until he enlisted in the United States Army.

In proof of my loyalty to the Constitution and Government of the United States, I present the accompanying oath, which I have taken, signed and acknowledged; to be filed with this application, in accordance with requirement of General Orders, No. 329, 1863, War Department, Adjutant General's Office.

December 20th, 1866

Thomas L Smith

OATH OF ALLEGIANCE.

I, Thomas L Smith, the owner and Claimant, do solemnly swear that the foregoing claim is a just and true claim due to me as master and owner of the said slave, and that the facts alleged in said claim in respect to the draft or enlistment (as the case may be) of said slave into the Military service of the United States are true. And I do further swear that I have never joined, or been concerned in, any insurrection or rebellion; that I have never borne arms against the United States; that I have never given any aid, countenance, counsel or encouragement to any person or persons engaged, or whom I had reason to believe were about to engage, in insurrection, rebellion or armed hostility against the United States; that I have neither sought, nor accepted, nor attempted to exercise the functions of any office, civil or military, nor to perform any service whatever, under any authority or pretended authority in hostility to the United States; that I have not yielded a voluntary support to any insurrection, rebellion or pretended government, authority, power or constitution within the United States hostile thereto. And I do further swear that, to the best of my knowledge and ability, I have supported and defended, and will continue to support and defend, the United States against all enemies, foreign and domestic; and that I have supported, defended and obeyed, and will continue to support, defend and obey, the Constitution and laws of the United States; that I will bear true faith and allegiance to the same; and that I take this oath freely, without any mental reservation or purpose of evasion: So help me God.

Thomas L Smith

Sworn to and subscribed before me, at Shelbyville Ky, this 20th day of December, 1866.

John E Duncan N.P.
for Shelby Co Kentucky

PROOF OF OWNERSHIP.

STATE OF KENTUCKY, }
COUNTY OF Shelby } SS.

We James K Logan and John H Davis each of lawful age, and resident citizens of the State and County aforesaid, do certify that Thomas L Smith of the State and County aforesaid, was on the ____ day of 186 5, the lawful owner of the slave named Legrand Todd; referred to and described in the foregoing claim for compensation.

James K Logan
John H Davis

Sworn to and subscribed before me a Notary Public for the County of Shelby State of Kentucky, this the 20th day of December 1866.

John E. Ormsbee N.P.

CENT STAMP

PROOF OF LOYALTY.

STATE OF KENTUCKY, }
COUNTY OF Shelby } SS.

We Geo A Armstrong and James H Neale loyal men and each of lawful age, and resident citizens of the town of Shelbyville & neighborhood in the State and County aforesaid, upon our oaths declare that we have known Thomas L Smith a resident of the State and County aforesaid, since the 4th day of March, 1861, and know that he has firmly and faithfully maintained his or her adherence and allegiance to the Government of the United States, by defending its cause against the Government and forces of the so-called Confederate States of America, in all suitable and practicable ways, and according to his or her ability and opportunity.

Geo A Armstrong
Jas H Neale

Sworn to and subscribed before me a Notary Public for the county of Shelby State of Kentucky, this the 20th day of December 1866.

John E. Ormsbee N.P.

CENT STAMP.

POWER OF ATTORNEY.

My Post-Office address is Shelbyville County of Shelby State of Kentucky, and I hereby direct that all communications to me, touching this claim, be sent under cover to M L Dayton, Shelbyville, Ky, who is hereby appointed and constituted my true and lawful attorney, to prosecute this claim for me, and who is hereby authorized and empowered to receive and receipt for any award, order, draft, certificate, voucher, warrant, papers or money that may be issued in the adjustment of this claim, or the payment thereof, the same as I might or could do in person were I present and acting for myself, and to file any additional evidence or papers that may be required in the prosecution of this claim.

Thomas L Smith

[WITNESS.]

The owner signs here. } James K Logan

Two witnesses to owner's signature sign here. } H. S. Williams

Acknowledged before me 20th December 1866
In Shelby Co Kentucky
John E Ormsbee N.P.

2088.

Colbert Hanson.

Co M, 13 U.S.Col'd H. Art'y.

Private	Corporal

CARD NUMBERS.

1	5 5 1 8 8 0	26	
2	5 5 1 9 1 3 8	27	
3	5 5 2 5 6 5 3	28	
4	5 5 2 5 6 9 8	29	
5	5 5 2 5 8 4 1	30	
6	9 1 2 9 6 6 3	31	
7		32	
8		33	
9		34	
10		35	
11		36	
12		37	
13		38	
14		39	
15		40	
16		41	
17		42	
18		43	
19		44	
20		45	
21		46	
22		47	
23		48	
24		49	
25		50	

Book Mark:

See also Leo A. 72456. Inf.

S.9.94389 Porcupine
AY.126805B

1 mile N(624)6K-2-28-16W
2 mls. Helaterie 10/7/32

J. P. Laurent Del

I. 13 Hurly **U.S.C.T.**

Harrison Talbert

....., Co. M, 13 Reg't U. S. Col'd Hurley

Appears on

Company Descriptive Book

of the organization named above.

DESCRIPTION.

Age 19 years; height 5 feet 5 inches.

Complexion Yel

Eyes Blk; hair Blk

Where born Nicholas Co. Ky

Occupation Farmer

ENLISTMENT.

When Nov 28, 1864.

Where Carrollton Ky

By whom Capt Mitchell, term 3 y'rs.

Remarks: Deserted from Camp

Augst 25/65

E W Spearmill

(383*a*) **Copyist.**

J | 13 H. Art'y. | U.S.C.T.

Harrison Tolbert

Pvt, Co. M, 13 Reg't U. S. Col'd H. Art'y.

Age ..... years.

Appears on

Company Muster Roll*

for June 23 to 30, 1865.

Joined for duty and enrolled:

When Nov 28, 1864.

Where Covington Ky

Period 3 years

Mustered in:

When Nov 28, 1864.

Where Covington Ky

Present or absent Present

Stoppage, $ 100 for .....

Due Gov't, $ 100 for .....

Valuation of horse, $ 100

Valuation of horse equipments, $ 100

Remarks: .....

* First current roll. No muster-in roll of this company on file.

Book mark: .....

Colbert

Copyist.

I | 13 H. Art'y. | U.S.C.T.

Harrison Polbert

Pvt., Co M, 13 Reg't U. S. Col'd H. Art'y.

Appears on

M. and D. Roll of Men Transferred

to the organization named above,

from Co A 72 U S Col'd Inf

Roll dated July 3 186 5.

When enlisted Nov 28, 186 4.

Period for which enlisted 3 years.

When mustered in Nov 28, 186 4.

Present or absent not stated

Company to which assigned

Remarks: Credited to

7th D. Ky

Book mark :

J Underwood

(342) *Copyist.*

D 13 H. Art'y. | U.S.C.T.

Harrison Tolbert

Pvt., Co....., 13 Reg't U. S. Col'd H. Art'y.

Appears on

M. and D. Roll of Men Transferred

to the organization named above,

from 22nd Ky.

Roll dated July 3, 186 5.

When enlisted Nov 28, 186 4

Period for which enlisted 3 years.

When mustered in Nov 28, 186 4.

Present or absent Not stated

Company to which assigned M

Remarks:

7 Dist. Ky

Book mark :

(342) J Hunsinger
Copyist.

T | 13 H. Art'y. | U.S.C.T.

Harrison Tolbert

Corpl, Co. M, 13 Reg't U. S. Col'd H. Art'y.

Appears on

Company Muster Roll

for July & Aug, 1865.

Present or absent Present

Stoppage, $ 100 for

Due Gov't, $ 100 for

Valuation of horse, $ 100

Valuation of horse equipments. $ 100

Remarks: Prots Corpl per SO No 3
dated Hd Qrs 13 USCA H
Camp Nelson Ky Aug 23-65

NEXT ROLL ON FILE MUSTER OUT.

Book mark:

A Bolton

Copyist.

(858)

T | 13 H. Art'y. | U.S.C.T.

Harrison Tolbert

Corp, Co. M, 13 Reg't U. S. Col'd H. Art'y.

Appears on **Co. Muster-out Roll,** dated Louisville Ky, Nov 18, 1865.

Muster-out to date Nov 18, 1865.

Last paid to June 30, 1865.

Clothing account:

Last settled ....., 186 ; drawn since $ 100

Due soldier $ ..... 100; due U. S. $ 17 18/100

Am't for cloth'g in kind or money adv'd $ 100

Due U. S. for arms, equipments, &c., $ 100

Bounty paid $ 100 00/100; due $ 100

Remarks: .....

Book mark: .....

Abbott

(361) *Copyist.*

3089

Tolver. Edward

Co G, 13 U.S.Col'd H. Art'y.

Private	Private

CARD NUMBERS.

1	5 5 1 7 9 5 0	26	
2	5 5 2 3 5 0 9	27	
3	5 5 1 8 3 7 3	28	
4	5 5 2 3 6 5 6	29	
5	5 5 2 3 8 0 3	30	
6	9 1 2 9 0 8 4	31	
7		32	
8		33	
9		34	
10		35	
11		36	
12		37	
13		38	
14		39	
15		40	
16		41	
17		42	
18		43	
19		44	
20		45	
21		46	
22		47	
23		48	
24		49	
25		50	

Book Mark:

See also 121. 2456 Inf.

J | 13 H. Art'y. | U.S.C.T.

Eduan Tolwar

....., Co. G, 13 Reg't U. S. Col'd H. Art'y.

Appears on

Company Descriptive Book

of the organization named above.

DESCRIPTION.

Age 27 years; height 5 feet 7 inches.

Complexion Dark

Eyes Blk; hair Blk

Where born Mason Co Ky.

Occupation Farmer

ENLISTMENT.

When Oct 1, 1864.
Mustered Oct 1'64

Where Greensburg, Ky.

By whom Capt W C Green; term 3 y'rs.

Remarks:

Beck

(383*g*) *Copyist.*

G | 13 H. Art'y. | U.S.C.T.

Edward Falwell

Pvt., Co. ....., 13 Reg't U. S. Col'd H. Art'y.

Appears on

M. and D. Roll of Men Transferred

to the organization named above,

from Co....., 121 Reg't U. S. Colored Infantry.

Roll dated June 23, 1865

When enlisted Oct. 1, 1864.

Period for which enlisted 3 years.

When mustered in Oct. 1, 1864

Present or absent Not stated

Company to which assigned G

Remarks: Credited to Mason Co. 9 D. Ky.

Book mark :

C. Williams

Copyist.

J | 13 H. Art'y. | U.S.C.T.

Edward Tolivar

Pvt, Co. G, 13 Reg't U. S. Col'd H. Art'y.

Appears on

M. and D. Roll of Men Transferred

to the organization named above,

from Co. A, 21st U.S. Col'd Inft'y

Roll dated Camp Nelson Ky. June 23, 1865.

When enlisted Oct 1, 1864.

Period for which enlisted 3 years.

When mustered in Oct 1, 1864.

Present or absent Not stated

Company to which assigned

Remarks:

Book mark:

Rochester

(342) *Copyist.*

J | 13 H. Art'y. | U.S.C.T.

Edward Poliver

Pvt., Co. G, 13 Reg't U. S. Col'd H. Art'y.

Age ..... years.

Appears on

Company Muster Roll*

for from June 23 to 30, 1865.

Joined for duty and enrolled:

When Oct. 1, 1864

Where Greenupsburg, Ky

Period 3 years

Mustered in:

When Oct. 1, 1864

Where Greenupsburg, Ky

Present or absent Present.

Stoppage, $ 67/100 for C. & G. E.

Due Gov't, $ 100 for

Valuation of horse, $ 100

Valuation of horse equipments, $ 100

Remarks:

* First current roll. No muster-in roll of this company on file.

Book mark:

(3586) W. Anderson
Copyist.

P | 13 H. Art'y. | U.S.C.T.

Edward Poliver

Pvt, Co. G, 13 Reg't U. S. Col'd H. Art'y.

Appears on

Company Muster Roll

for July & Aug., 1865.

Present or absent Present

Stoppage, $ 65/100 for C & G. E.

Due Gov't, $ 100 for

Valuation of horse, $ 100

Valuation of horse equipments, $ 100

Remarks:

NEXT ROLL ON FILE MUSTER OUT.

Book mark:

P. Anderson

(358) *Copyist.*

J | **13 H. Art'y.** | **U.S.C.T.**

Edward Toliver

Priv, Co. G, 13 Reg't U. S. Col'd H. Art'y.

Appears on **Co. Muster-out Roll,** dated

Louisville, Ky, Nov 18, 1865.

Muster-out to date Nov 18, 1865.

Last paid to June 30, 1865.

Clothing account:

Last settled ....., 186 ; drawn since $ 100

Due soldier $ ..... 100; due U. S. $ 11 18 100

Am't for cloth'g in kind or money adv'd $ 100

Due U. S. for arms, equipments, &c., $ 100

Bounty paid $ 100 ~ 100; due $ 100

Remarks: Due US for one lost

Pompion 1 08, for C C & G

Equipage 1 canteen 65.

Book mark: .....

A. W Allen

(361) *Copyist.*

2090

Tolliver. Henry

Co H, 13 U.S.Col'd H. Art'y.

Private	Private

CARD NUMBERS.

1	55-1853-1	26	
2	55-1795-4	27	
3	55-2395-1	28	
4	55-2410-7	29	
5	55-2425-2	30	
6	9129222	31	
7		32	
8		33	
9		34	
10		35	
11		36	
12		37	
13		38	
14		39	
15		40	
16		41	
17		42	
18		43	
19		44	
20		45	
21		46	
22		47	
23		48	
24		49	
25		50	

Book Mark:

See also Co B. 121. USCT Inf

S-651-70-00 Aft.
S 7960.075-RO. Rel.

J. H. Vincent Dec'r

9 | **13 H. Art'y.** | **U.S.C.T.**

Henry Tolver

....., Co. H, 13 Reg't U.S. Col'd H. Art'y.

Appears on

Company Descriptive Book

of the organization named above.

DESCRIPTION.

Age 19 years; height 5 feet 4½ inches.

Complexion Black

Eyes Blk; hair Blk

Where born Mason Co Ky

Occupation Laborer

ENLISTMENT.

When Nov 28, 1864.

Where Maysville Ky

By whom Capt Smith; term 3 y'rs.

Remarks:

Beck

(383*a*) **Copyist.**

13th U.S.C.T.

Hiram Tolliver

Pvt, Co. K, 13 Reg't U. S. Col'd Inf

Age ____ years.

Appears on

Company Muster Roll*

for May June, 1865.

Joined for duty and enrolled:

When Nov 26, 1864.

Where Maysville Ky

Period 3 years.

Mustered in:

When Nov 30, 1864.

Where Lexington Ky

Present or absent Present

Stoppage, $ 100 for

Due Gov't, $ 2 72/100 for Clothing

Valuation of horse, $ 100

Valuation of horse equipments, $ 100

Remarks:

* First current roll. No muster-in roll of this company on file.

Book mark:

(358*b*) *Copyist.*

T | 13 H. Art'y. | U.S.C.T.

Henry Tolliver

Pvt., Co. K, 13 Reg't U. S. Col'd H. Art'y.

Appears on

M. and D. Roll of Men Transferred

to the organization named above,

from Co. B, 121 Reg't U. S. Colored Infantry.

Roll dated Camp Nelson Ky. June 23, 1865.

When enlisted Nov 28, 1864.

Period for which enlisted 3 years.

When mustered in Nov 30, 1864

Present or absent Not stated

Company to which assigned

Remarks:

Book mark:

Moulton

(342) *Copyist.*

9 | 13 H. Art'y. | U.S.C.T.

Henry Galvan

Pvt. Co. , 13 Reg't U. S. Col'd H. Art'y.

Appears on

M. and D. Roll of Men Transferred

to the organization named above,

from Co. , 12D Reg't U. S. Colored Infantry.

Roll dated June 26, 1865.

When enlisted Nov. 28, 1864.

Period for which enlisted 3 years.

When mustered in Nov. 30, 1864.

Present or absent Not stated

Company to which assigned H

Remarks: Credited to Mason Co. Ky.

Book mark :

C. Williams

(342) *Copyist.*

13 H. Art'y. | U.S.C.T.

Henry Tolliver

A——, Co. H, 13 Reg't U. S. Col'd H. Art'y.

Appears on

Company Muster Roll

for July & Aug, 1865.

Present or absent Present

Stoppage, $ 100 for

Due Gov't, $ 100 for

Valuation of horse, $ 100

Valuation of horse equipments, $ 100

Remarks: due US for Camp & Equip $12.72

NEXT ROLL ON FILE MUSTER OUT.

Book mark:

J. Bruick

(358) *Copyist.*

13 H. Art'y. | U.S.C.T.

Tony Tolliver

Pvt., Co. L, 13 Reg't U. S. Col'd H. Art'y.

Appears on **Co. Muster-out Roll,** dated Louisville, Nov 16, 1865.

Muster-out to date Nov 16, 1865.

Last paid to June 30, 1865.

Clothing account:

Last settled ....., 186 ; drawn since $ 100

Due soldier $ ..... 100; due U. S. $ 4 99 100

Am't for cloth'g in kind or money adv'd $ 100

Due U. S. for arms, equipments, &c., $ 100

Bounty paid $ 100 100; due $ 100

Remarks: .....

Book mark: .....

H. Schmick

(361) *Copyist.*

2091

Toms Robert

Co A, 13 U.S.Col'd H. Art'y.

Private	Private

CARD NUMBERS.

1	55165517	26	
2	5519838	27	
3	5519970	28	
4	552010 5	29	
5	55 20257	30	
6	55 20424	31	
7	55 20568	32	
8	9 12 8056	33	
9	431360000	34	
10		35	
11		36	
12		37	
13		38	
14		39	
15		40	
16		41	
17		42	
18		43	
19		44	
20		45	
21		46	
22		47	
23		48	
24		49	
25		50	

Book Mark.

See also

S. 599948 2/1.4.
S 840296 - Rego
S. 95-5-605 - 2nd Cud. (P.D.C.A.)
S. 11217 - 0 - 0 - 7/11/ mc.
S.S.C.10. (Rev) 42826. D.A. MC
addl St P.B 11/5/34 Kmm.

D. Townsend Esq

13 H. Art'y. | U.S.C.T.

Robert Farmer

....., Co. A, 13 Reg't U. S. Col'd H. Art'y.

Appears on

Company Descriptive Book

of the organization named above.

DESCRIPTION.

Age 18 years; height 5 feet 3 inches.

Complexion Copper

Eyes Blk; hair Blk

Where born Hart Co Kentucky

Occupation Farmer

ENLISTMENT.

When Oct 20, 1864.

Where Bowling Green

By whom Capt Holton; term 3 y'rs.

Remarks:

Deserted

(383*g*) *Copyist.*

T | 13 A | USCT

Roberts Toms

Appears with rank of Pvt on

Muster and Descriptive Roll

of a Detachment of U.S. Colored recruits forwarded for 13 Regt U.S. Colored H. Artly. Roll dated Bowling Green Ky., Oct 31, 1864.

Where born Hart Co Ky

Age 18 years; occupation Farmer

When enlisted Oct 17, 1864.

Where enlisted B. Green Ky

For what period enlisted 3 years.

Eyes blk; hair blk

Complexion copper; height 5 ft. 3 in.

When mustered in ____, 186 .

Where mustered in ____

Bounty paid $ ____ 100; due $ ____ 100

Clothing account:

Last settled ____, 186 ; drawn since $18 30/100

Date of first muster Oct 20, 1864.

Company to which assigned ____

Remarks: New recruit Hart Co - owed Service to R D. Toms

Book mark : ____

G. O. Mark

(356m) **Copyist.**

E | 13 H. Art'y. | U.S.C.T.

Robert Townsend

Pvt, Co. A, 13 Reg't U. S. Col'd H. Art'y.

Age ..... years.

Appears on

Company Muster Roll*

for to Dec 31st, 1864.

Joined for duty and enrolled:

When Oct. 20, 1864.

Where Bowling Green, Ky

Period 3 years

Mustered in:

When Oct. 20, 1864.

Where Bowling Green Ky

Present or absent Present

Stoppage, $.....100 for .....

Due Gov't, $.....100 for .....

Valuation of horse, $.....100

Valuation of horse equipments, $.....100

Remarks: .....

xInvalid by Townsend Ex.

* First current roll. No muster-in roll of this company on file.

Book mark: .....

W. G. Hughes

(3586) Copyist.

I | 13 H. Art'y. | U.S.C.T.

Robert Townsend

Pvt, Co. A, 13 Reg't U. S. Col'd H. Art'y.

Appears on

Company Muster Roll

for Jan & Feb, 186 5.

Present or absent absent

Stoppage, $ 100 for

Due Gov't, $ 100 for

Valuation of horse, $ 100

Valuation of horse equipments, $ 100

Remarks:

Due $40 first installment
of Gov. Bounty
Absent no arrest since

Book mark:

W. J. Hughes

(358) *Copyist.*

I | 13 H. Art'y. | U.S.C.T.

Robert Townes

Pvt., Co. A, 13 Reg't U. S. Col'd H. Art'y.

Appears on

Company Muster Roll

for March & Apr, 186 5.

Present or absent Absent

Stoppage, $ 100 for

Due Gov't, $ 100 for

Valuation of horse, $ 100

Valuation of horse equipments, $ 100

Remarks:

Absent on Confinement at
Paducah Ky since
Feb 7th 1865.

Book mark:

W. T. Hughes

(358) Copyist.

	13 H. Art'y.	U.S.C.T.

Robert Timms

Pvt., Co. A, 13 Reg't U. S. Col'd H. Art'y.

Appears on

Company Muster Roll

for May & June, 1865.

Present or absent Present

Stoppage, $2 25/100 for Clothing

Due Gov't, $ 100 for

Valuation of horse, $ 100

Valuation of horse equipments, $ 100

Remarks: Stoppage of Two Months pay by Sentence of Gen'l Genl Court Martial Order 28. 1st Installment Bounty due.

FROM SECOND AUDITOR'S ROLL.

Book mark:

P. J. Hughes

(358) Copyist.

F | 13 H. Art'y. | U.S.C.T.

Robert Thomas

Asst, Co. A, 13 Reg't U. S. Col'd H. Art'y.

Appears on

Company Muster Roll

for July & Aug, 186 5.

Present or absent Present

Stoppage, $ 100 for

Due Gov't, $ 100 for

Valuation of horse, $ 100

Valuation of horse equipments, $ 100

Remarks:

Due 1st Installment
Less Bounty $100
Stoppage of Two
Months Pay by Sentence
of Genl Court Martial
Order No. 2-8

[illegible] ON FILE MUSTER OUT.

Book mark:

W. O. Hughes

(358) Copyist.

I | 13 H. Art'y. | U.S.C.T.

Robert Stewart

Appears with rank of Pvt. on

Muster and Descriptive Roll of a Detachment of U. S. Vols. forwarded

for the 13 Reg't U. S. Col'd H. Art'y. Roll dated

Camp Wheatley, Jan. 23, 1865.

Where born Wash. Dist.

Age 18 y'rs; occupation Seaman

When enlisted Oct. 20, 1864.

Where enlisted B. Vincent, Key.

For what period enlisted 3 years.

Eyes Blk; hair Blk

Complexion Mulatto; height 5 ft. 3 in.

When mustered in Oct. 20, 1864.

Where mustered in B. Vincent, Key.

Bounty paid $100; due $100

Where credited

Company to which assigned A.

Remarks:

Book mark:

Magraw

(339) Copyist.

F | 13 H. Art'y. | U.S.C.T.

Robert Towns

Pvt, Co. A, 13 Reg't U. S. Col'd H. Art'y.

Appears on **Co. Muster-out Roll,** dated Louisville Ky, Nov 18, 186 5.

Muster-out to date Nov 18, 186 5.

Last paid to June 30, 186 5.

Clothing account:

Last settled ....., 186 ; drawn since $ 100

Due soldier $ ..... 100; due U. S. $ 14 64/100

Am't for cloth'g in kind or money adv'd $ 100

Due U. S. for arms, equipments, &c., $ 100

Bounty paid $ 100 00/100; due $ 100

Remarks: .....

Book mark: .....

W. F. Hughes

(361) *Copyist.*

Tomo. Robrt

P, Co. A, 13 Reg't Ucha.

1 Enclosures.

Bed Cards	Final Statements
Burial Records	Furloughs or L. of A.
Certs. of Dis. for Discharge	Med. Certificates
C. M. Charges	Med. Des. Lists
Descriptive Lists	Orders
Discharge Certificates	Pris. of War Record
Enlistment Papers	Resignations

Other papers relating to—

Admission to Hosp'l	Furlough or L. of A.
Casualty Sheet	Med. Examination
Confinement	Misc. Information 1
Contracts	Pay or Clothing
Death or Effects	Personal Reports
Desertion	Rank
Discharge from Hosp'l	Transfer to Hosp'l
Discharge from Service	Transfer to V. R. C.
Duty	Transportation

MICROFILM PUBLICATION M 1834

COMPILED MILITARY SERVICE RECORDS
OF VOLUNTEER UNION SOLDIERS WHO SERVED WITH
THE UNITED STATES COLORED TROOPS (USCT)
13TH REGIMENT OF HEAVY ARTILLERY

PERSONAL PAPERS' TARGET SHEET

PLEASE NOTE THE CHECKED INFORMATION ABOUT THE PERSONAL PAPERS IN THIS FILE:

☐ NO PERSONAL PAPERS WERE FOUND IN THIS FILE WHEN THE RECORDS WERE ARRANGED FOR MICROFILMING.

☑ 2 PERSONAL PAPER(S) FOUND IN THIS FILE WHEN THE RECORDS WERE ARRANGED FOR MICROFILMING.

Robt Young.
Pvt Co. "A" 13th U.S. Colored Inf
Mt Everbook

Adjutant General's Office,

COLORED TROOPS BRANCH,

August 24", 1875

Mr Ellenbrook Vol. C. T., 187

Wanted in the case of Robert Toms, Private, Co. "A",
13" Reg't U S C Artly Dft, reported on Muster Roll
for July and August 165. "Stop two months pay by
sentence of G.C.M. orders no 28. Please furnish
copy of sentence.

Respectfully,

Wm A Woodward
Chief Clerk.
Jno H Haulton

Adjutant General's Office,

Division of Discontinued Commands.

Aug. 31st, 1875.

Vol. C. T., 187

Reply in case of Robert Toms Pvt, Co. "A",
13" Reg't U. S. C. A. Hy.
Regtl and Co Records and Records of Pro Mar Genl Dept Ky
furnish no information in this case.
Records Pro Mar Genl Dept Ky show that he was confined
at Paducah Feby 20. "65. Charge Mutiny. "Sent to
Regt by order Genl Palmer". G.O. Dist Western Ky
furnish no evidence of trial. The G.C.M.O. Dept
Ky are not on file in this Office.

B Ck.

2. You will not perform the duties of an officer under this appointment except in accordance with competent orders.

3. There is inclosed herewith a form for oath of office, which you are requested to execute and return promptly to the agency from which it was received by you. The execution and return of the required oath of office constitute an acceptance of your appointment. No other evidence of acceptance is required. Upon receipt in the War Department of the oath of office, properly executed, a commission evidencing your appointment will be sent to you.

4. Prompt action is requested since the regulations require cancellation of the appointment if a reply is not received within a reasonable time.

5. Whenever your permanent address is changed, it is important that you notify all concerned, using the inclosed Personal Report form.

Organization Rec. Section.

For statement of battles participated in by Co. A, 13th U.S.C. Heavy Artillery.
See Claimants statement herewith.

4/26/26 Rosafy--O.R.D.

By J.A.Mc

Vol Rec Sec

Munfordville,
Perryville
and Missionary Ridge
were fought in 1861-
62 and 63. The 13th
US C Hart was not
organized until
July 1864.
No record found /
Full credit
Rosafy
4/28/26 AGO

Tonery Richard 2092

Co H, 13 U.S.Col'd H. Art'y.

Private

CARD NUMBERS.

1	26
2	27
3 See Tonny Richard	28
4	29
5	30
6	31
7	32
8	33
9	34
10	35
11	36
12	37
13	38
14	39
15	40
16	41
17	42
18	43
19	44
20	45
21	46
22	47
23	48
24	49
25	50

Book Mark.

See also

2093

Tooley, Adam

Co D, 13 U.S.Col'd H.Art'y.

Private | Private

CARD NUMBERS.

1	5-5-17244	26	
2	5-5-16374	27	
3	5-5-22363	28	
4	5-5-22512	29	
5	9128610	30	
6		31	
7		32	
8		33	
9		34	
10		35	
11		36	
12		37	
13		38	
14		39	
15		40	
16		41	
17		42	
18		43	
19		44	
20		45	
21		46	
22		47	
23		48	
24		49	
25		50	

Book Mark:

See also

D210477 Domestic
P2910463 and WO
0.2961030 - and.

J. K. Emerson Est

13 H. Art'y. | U.S.C.T.

Wm E Cooley

....., Co. D, 13 Reg't U. S. Col'd H. Art'y.

Appears on

Company Descriptive Book

of the organization named above.

DESCRIPTION.

Age 20 years; height 5 feet 4½ inches.

Complexion Dk

Eyes Blk; hair Blk

Where born Nelson Co Kentucky

Occupation Farmer

ENLISTMENT.

When May 31, 1865.

Where Louisville Ky

By whom Capt Howard; term 3 y'rs.

Remarks:

Deserted

(383*g*) **Copyist.**

13 H. Art'y. | **U.S.C.T.**

Adam Dailey

Appears with rank of Pvt on

Muster and Descriptive Roll of a Detachment of U. S. Vols. ~~forwarded~~ organized

for the 13 Reg't U. S. Col'd H. Art'y. Roll dated

Nov 1 Dated, , 186 .

Where born Nelson Co. Kentucky

Age 20 y'rs; occupation Farmer

When enlisted May 31, 1863.

Where enlisted Louisville, Ky,

For what period enlisted 3 years.

Eyes Blk; hair Blk

Complexion Blk; height 5 ft. 4 1/2 in.

When mustered in May 31, 1863.

Where mustered in Louisville, Ky,

Bounty paid $ 100; due $ 100

Where credited

Company to which assigned D

Remarks:

Book mark:

D. B. Taylor

(339) Copyist.

I | 13 H. Art'y. | U.S.C.T.

Adam Tooley

Appears with rank of Priv. on

Muster and Descriptive Roll of a Detachment of U. S. Vols. forwarded

for the 13 Reg't U. S. Col'd H. Art'y. Roll dated

Louisville, Ky, May 31, 1865.

Where born Nelson Co., Ky

Age 25 y'rs; occupation Farmer

When enlisted May 31, 1865.

Where enlisted Louisville, Ky

For what period enlisted 3 years.

Eyes Black; hair Black

Complexion Black; height 5 ft. 4½ in.

When mustered in May 31, 1865.

Where mustered in Louisville

Bounty paid $ 100; due $ 100

Where credited Nelson Co, 4 Dist Ky

Company to which assigned

Remarks:

Book mark:

Humphries

(339) *Copyist.*

1311 | U.S.C.T.

Henry Foley

Pvt., Co. D, 13 Reg't U. S. Col'd Inf.

Appears on

Company Muster Roll

for May & June, 1865.

Present or absent Present

Stoppage, $ 100 for

Due Gov't, $ 100 for

Valuation of horse, $ 100

Valuation of horse equipments, $ 100

Remarks: Has received one
(1) Bounty. Dues
and allowance Govt
Bounty.

FROM SECOND AUDITOR'S ROLL.

NEXT ROLL ON FILE MUSTER OUT.

Book mark:

Logan

(358) *Copyist.*

H | **13** H. Art'y. | **U.S.C.T.**

Adam Foley

Pvt., Co. D, 13 Reg't U. S. Col'd H. Art'y.

Appears on **Co. Muster-out Roll,** dated Louisville Ky, Nov 18, 1865.

Muster-out to date Nov 18, 1865.

Last paid to June 30, 1865.

Clothing account:

Last settled ....., 186 ; drawn since $ 100

Due soldier $ ..... 100; due U. S. $ 100

Am't for cloth'g in kind or money adv'd $ 12 56/100

Due U. S. for arms, equipments, &c., $ 100

Bounty paid $ 100 00/100; due $ 100

Remarks: .....

Book mark: .....

D. Legro

(361) *Copyist.*

Toolez. Adam

....., Co. D, 13 Reg't U.S.C.I.

1 **Enclosures.**

Bed Cards	Final Statements .....
Burial Records	Furloughs or L. of A. .....
Certs. of Dis. for Discharge	Med. Certificates .....
C. M. Charges	Med. Des. Lists .....
Descriptive Lists	Orders .....
Discharge Certificates	Pris. of War Record .....
Enlistment Papers 1	Resignations .....

Other papers relating to—

Admission to Hosp'l	Furlough or L. of A. .....
Casualty Sheet	Med. Examination .....
Confinement	Misc. Information .....
Contracts	Pay or Clothing .....
Death or Effects	Personal Reports .....
Desertion	Rank .....
Discharge from Hosp'l	Transfer to Hosp'l .....
Discharge from Service	Transfer to V. R. C. .....
Duty	Transportation .....
.....	.....

NOTE 1.—This blank will be used for enlistments of United States colored troops. They will be made out in duplicate in all cases—one to accompany the recruiting return of the superintendent (not the recruiting officer) to the Adjutant General, and one to accompany the accounts of the officer who pays bounty, &c.

NOTE 2.—An enlistment holds to service. A muster-in must, in all cases, precede payment of pay, bounty, pension, &c. A muster-in roll, must in the Adjutant General's Office as evidence of muster-in. The mustering officer, commissary, or assistant commissary of musters, as the case may be, will countersign both enlistments as having mustered the soldiers into the service of the United States before either of them is given to the disbursing officer.

DECLARATION OF RECRUIT.

I, Aaron Dooley ..... desiring to volunteer as a soldier in the ARMY OF THE UNITED STATES, for the term of *Three Years*, DO DECLARE That I am 25 years and ..... months of age; that I have never been discharged from the United States service on account of disability or by sentence of a court-martial, or by order before the expiration of a term of enlistment; and I know of no impediment to my serving honestly and faithfully as a soldier for three years.

GIVEN at Louisville Ky

the 31 day of May 1865

Witness:

C. E. Paulding

his
Aaron X Dooley
mark

Aaron Dooley
Age 25 yrs
No. .....
Volunteered at Louisville Ky
May 31 1865
By Capt. C. E. Paulding
Recruiting Officer

Consent of Parent or Guardian in case of a Minor, if a Free Man, or in the case of a Slave, of the Person to whom he owes Service:

I, ... DO CERTIFY, That I am

the .....

.....

that the said ..... is ..... years of age; and I do freely give my CONSENT to his volunteering as a SOLDIER in the Army of the United States, for the period of THREE YEARS, under the conditions of the laws of the United States.

GIVEN at .....

the ..... day of .....

Witness:

.....

.....

(A. G. O. No. 74 & 76.)

UNITED STATES COLORED TROOPS ENLISTMENT.

STATE OF Kentucky

TOWN OF Nelson County

I, Adam Dorley born in Nelson Co

in the State of Kentucky aged 25 years

and by occupation a farmer Do HEREBY ACKNOWLEDGE to

have volunteered 31st day of May 1865,

to serve as a **Soldier** in the **Army of the United States of America,** for the period of THREE YEARS, unless sooner discharged by proper authority: Do also agree to accept such bounty, pay, rations, and clothing, as are, or may be, established by law for the U. S. colored troops.

And I, Adam Dorley

do solemnly swear that I will bear true faith and allegiance to the **United States of America,** and that I will serve them honestly and faithfully against all their enemies or opposers whomsoever; and that I will observe and obey the orders of the President of the United States, and the orders of the officers appointed over me, according to the Rules and Articles of War.

Sworn and subscribed to, at Louisville Ky

this 31 day of May 1865 Adam X Dorley his mark

Before E. Munach Capt & Asst Q M 2nd Div Ky

I CERTIFY, ON HONOR, That I have carefully examined the above named Volunteer agreeably to the General Regulations of the Army, and that, in my opinion, he is free from all bodily defects and mental infirmity, which would in any way disqualify him from performing the duties of a soldier.

J. Gardner

EXAMINING SURGEON. By Ernst 2nd Div Ky

I CERTIFY, ON HONOR, That I have minutely inspected the Volunteer, A Dorley previously to his enlistment, and that he was entirely sober when enlisted; that, to the best of my judgment and belief, he is of lawful age; and that, in accepting him as duly qualified to perform the duties of an able-bodied soldier, I have strictly observed the regulations which govern the recruiting service. This soldier has Blk eyes, Blk hair, Dk complexion, is 5 feet 6 1/2 inches high.

E. Munach Capt & Asst Q M 2nd Div Ky

RECRUITING OFFICER OR AGENT.

Mustered into the United States Service 31 day of May 1865

E. Munach Capt & Asst Q M 2nd Div Ky

Mustering Officer.

Mustered into the service of the United States, for three years or during the war, from date of enlistment, in Company ..... of ..... Regiment of ..... Volunteers, on the ..... day of ....., 186 , at .....

2094

Pfc Edward

Co K, 13 U.S.Col'd H. Art'y.

Private

CARD NUMBERS.

1	26
2 See Ralph Edward	27
3	28
4	29
5	30
6	31
7	32
8	33
9	34
10	35
11	36
12	37
13	38
14	39
15	40
16	41
17	42
18	43
19	44
20	45
21	46
22	47
23	48
24	49
25	50

Book Mark:

See also

2095

Sorrett, Reuben

Co D, 13 U.S. Col'd H. Art'y.

Inmate | Inmate

CARD NUMBERS.

1	5-5-1 7 2 4 2	26	
2	5-5-3 3 2 0 6	27	
3	5-5-2 2 3 6 0	28	
4	5-5-2 2 5-0 9	29	
5	9 1 2 8 6 0 7	30	
6		31	
7		32	
8		33	
9		34	
10		35	
11		36	
12		37	
13		38	
14		39	
15		40	
16		41	
17		42	
18		43	
19		44	
20		45	
21		46	
22		47	
23		48	
24		49	
25		50	

Book Mark:

See also

D | 13 H. Art'y. | U.S.C.T.

Reuben Corbett

....., Co. D, 13 Reg't U. S. Col'd H. Art'y.

Appears on

Company Descriptive Book

of the organization named above.

DESCRIPTION.

Age 14 years; height 5 feet 7½ inches.

Complexion Dark

Eyes Dk; hair Blk

Where born Shelby Co Kentucky

Occupation Laborer

ENLISTMENT.

When May 29, 186 5.

Where Lawrenceburg Ky

By whom Capt Fiddler; term 3 y'rs.

Remarks:

Deserted

(383g) **Copyist.**

N | 13 H. Art'y. | U.S.C.T.

Reuben Garbitt

Appears with rank of Pvt on

Muster and Descriptive Roll of a Detachment of U. S. Vols. ~~forwarded~~ 2nd

for the 13 Reg't U. S. Col'd H. Art'y. Roll dated

Not Mustered, ..., 186 .

Where born Shelby Co Kentucky

Age 44 yrs; occupation Laborer

When enlisted May 29, 1863.

Where enlisted Lebanon Ky

For what period enlisted 3 years.

Eyes Blk; hair Blk

Complexion Blk; height 5 ft. 7 1/2 in.

When mustered in May 29, 1863.

Where mustered in Lebanon Ky

Bounty paid $ 100; due $ 100

Where credited .....

Company to which assigned K

Remarks: .....

.....

.....

.....

Book mark: .....

.....

(339) B Douglas Copyist.

F | 13 H. Art'y. | U.S.C.T.

Reuben Forbett

Appears with rank of ..... on

Muster and Descriptive Roll of a Detachment of U. S. Vols. forwarded

for the 13 Reg't U. S. Col'd H. Art'y. Roll dated

Lebanon Ky May 31, 1865.

Where born Shelby Ky.

Age 44 y'rs; occupation Laborer

When enlisted May 29, 1865.

Where enlisted Lebanon Ky

For what period enlisted 3 years.

Eyes Blk; hair Blk

Complexion Blk; height 5 ft. 7½ in.

When mustered in May 29, 1865.

Where mustered in Lebanon Ky.

Bounty paid $ 100; due $ 100

Where credited .....

Company to which assigned .....

Remarks: Owners Name. Mrs. Forbett, Residence, Shelby — Without Consent.

.....

.....

Book mark: .....

Harris

(339) *Copyist.*

F V3HQ | **U.S.C.T.**

Pvt Co. D, 13 Reg't U. S. Col'd HA

Appears on

Company Muster Roll

for May & June, 1865.

Present or absent Present

Stoppage, $ 100 for

Due Gov't, $ 100 for

Valuation of horse, $ 100

Valuation of horse equipments, $ 100

Remarks: Has received no U.S. Bounty Due 1st Installment Gov't Bounty

FROM SECOND AUDITOR'S ROLL.

NEXT ROLL ON FILE MUSTER OUT.

Book mark:

Logan

(358) *Copyist.*

5

13 H. Art'y. | **U.S.C.T.**

Pearson Parlett

Lt., Co. D, 13 Reg't U. S. Col'd H. Art'y.

Appears on **Co. Muster-out Roll,** dated Louisville Ky, Nov 16, 1865.

Muster-out to date Nov 16, 1865.

Last paid to June 30, 1865.

Clothing account:

Last settled ....., 186 ; drawn since $ 100

Due soldier $ ....100; due U. S. $ 100

Am't for cloth'g in kind or money adv'd $ 17 23/100

Due U. S. for arms, equipments, &c., $ 100

Bounty paid $ 100 100; due $ 100

Remarks: .....

.....

.....

.....

.....

.....

Book mark: .....

(361) Logan

Copyist.

2096

Foran. Peter

Co. B, 13 U.S. Col'd H. Art'y.

Private | Private

CARD NUMBERS.

1	5.5.15.75.9	26	
2	5.5.1674.6	27	
3	5.5.2078.0	28	
4	5.5.214.00	29	
5	9128.230	30	
6		31	
7		32	
8		33	
9		34	
10		35	
11		36	
12		37	
13		38	
14		39	
15		40	
16		41	
17		42	
18		43	
19		44	
20		45	
21		46	
22		47	
23		48	
24		49	
25		50	

Book Mark:

See also

D | 13 H. Art'y. | U.S.C.T.

Peter Doran

....., Co. B, 13 Reg't U. S. Col'd H. Art'y.

Appears on

Company Descriptive Book

of the organization named above.

DESCRIPTION.

Age 25 years; height 5 feet 3½ inches.

Complexion Black

Eyes Black; hair Black

Where born Hopkinsville Ky

Occupation Farmer

ENLISTMENT.

When January 20, 1863.

Where Paducah Ky

By whom Capt Morgan; term 3 y'rs.

Remarks: Died of Pneumonia at Smithland Ky Jany 26 1863 Descriptive and Final Statements forwarded Feby 1863

Deadrick

(383g) Copyist.

T | 13 H. Art'y. | U.S.C.T.

Peter Torian

Appears with rank of Pvt on

Muster and Descriptive Roll of a Detachment of U. S. Vols. forwarded

for the 13 Reg't U. S. Col'd H. Art'y. Roll dated

Paducah Ky, Jan 20, 1865.

Where born Christian Co. Ky

Age 25 y'rs; occupation Farmer

When enlisted Jany 20, 1865.

Where enlisted Paducah Ky

For what period enlisted 3 years.

Eyes Black; hair Black

Complexion Black; height 5 ft. 3½ in.

When mustered in Jany 20, 1865.

Where mustered in

Bounty paid $ 100; due $ 100

Where credited Christian Co 2d Dist of Ky

Company to which assigned B

Remarks:

Book mark:

Hammer

(339) *Copyist.*

I 13H. Art'y | **U.S.C.T.**

Peter Jonians

Pvt., Co. B., 13 Reg't U.S. Col'd H. Art'y.

Age.....**years.**

Appears on

Company Muster Roll*

for Enlistment to Feb 28, 1865.

Joined for duty and enrolled:

When ..... Jan. 20 ....., 1865;

Where ..... Paducah, Ky. .....

Period 3 years.

Mustered in:

When ..... Jan. 20 ....., 1865;

Where ..... Paducah, Ky. .....

Present or absent .....

Stoppage, $.....100 for.....

Due Gov't, $.....100 for.....

Valuation of horse, $.....100

Valuation of horse equipments, $.....100

Remarks: Died of disease at Smithland, Ky Jan. 26'65;

***First current roll. No muster-in roll of this company on file.**

Book mark :.....

Parkinson

(358*b*) *Copyist.*

I | **13** H. Art'y. | **U.S.C.T.**

Peter Tonzin

Appears with rank of Pvt. on

Muster and Descriptive Roll of a Detachment of U. S. Vols. ~~forwarded~~

Mustered Out
Co. B.

for the 13 Reg't U. S. Col'd H. Art'y. Roll dated

Camp Nelson June 23, 1865.

Where born Christian Co., Ky.

Age 25 y'rs; occupation Farmer

When enlisted Jan. 20, 1865.

Where enlisted Paducah, Ky.

For what period enlisted 3 years.

Eyes Blk.; hair Blk

Complexion Blk; height 5 ft. 3½ in.

When mustered in Jan. 20, 1865.

Where mustered in Paducah, Ky.

Bounty paid $ 100; due $ 100

Where credited 12th Dist. Ky.

Company to which assigned B

Remarks: Died Jan. 26/65.
Final Statement Given

Book mark:

(339) Wagner Copyist.

J | **13 H. Art'y.** | **U.S.C.T.**

Peter Torjanu

Pvt., Co. B, 13 Reg't U. S. Col'd H. Art'y.

Appears on **Co. Muster-out Roll,** dated Louisville, Ky., Nov 18, 1865.

Muster-out to date ....., 186 .

Last paid to Nov 1st, ~~186~~ .

Clothing account:

Last settled....., 186 ; drawn since $.....100

Due soldier $.....100; due U. S. $.....100

Am't for cloth'g in kind or money adv'd $.....100

Due U. S. for arms, equipments, &c., $.....100

Bounty paid $.....100; due $.....100

Remarks: Died Jan. 26, '65.
Southland, Ky. Prem-
ises.

Book mark:

Falconer

(361) *Copyist.*

Toryan, Petter

F, Co. B, 13 Reg't N.Y.S.M.A.

3 **Enclosures.**

Bed Cards	Final Statements 1
Burial Records	Furloughs or L. of A.
Certs. of Dis. for Discharge	Med. Certificates
C. M. Charges	Med. Des. Lists
Descriptive Lists	Orders
Discharge Certificates	Pris. of War Record
Enlistment Papers 1	Resignations

Other papers relating to—

Admission to Hosp'l	Furlough or L. of A.
Casualty Sheet	Med. Examination
Confinement	Misc. Information
Contracts	Pay or Clothing
Death or Effects 1	Personal Reports
Desertion	Rank
Discharge from Hosp'l	Transfer to Hosp'l
Discharge from Service	Transfer to V. R. C.
Duty	Transportation

DECLARATION OF RECRUIT.

I, *Peter Soryam of Trigg Co Ky* desiring to volunteer as a soldier in the ARMY OF THE UNITED STATES, for the term of *Three Years*, DO DECLARE That I am *25* years and *—* months of age; that I have never been discharged from the United States service on account of disability or by sentence of a court-martial, or by order before the expiration of a term of enlistment; and I know of no impediment to my serving honestly and faithfully as a soldier for three years.

GIVEN at *Paducah Ky*

the *26* day of *Sept* 1865

Witness:

F. M. Gilliland

Peter his Soryam
Mark

By

Capt & Post Quar Mas

Peter Soryam
Co "D"
Forty-Nine
No. Forty-Nine

Volunteered at *Paducah Ky*

Sept 26 1865

13 USC

Consent of Parent or Guardian in case of a Minor, if a Free Man, or in the case of a Slave, of the Person to whom he owes Service:

I, ... DO CERTIFY, That I am

the .....

.....

that the said..... is..... ..... years of age; and I do freely give my CONSENT to his volunteering as a SOLDIER in the Army of the United States, for the period of THREE YEARS, under the conditions of the laws of the United States.

GIVEN at .....

the ..... day of .....

Witness:

.....

.....

(A. G. O. No. 74 & 76.)

NOTE 1.—This blank will be used for enlistments of United States colored troops. They will be made out in duplicate in all cases—one to accompany the recruiting return of the superintendent (not the recruiting officer) to the Adjutant General, and one to accompany the accounts of the officer who pays bounty, &c.

NOTE 2.—An enlistment holds to service. A muster-in must, in all cases, precede payment of pay, bounty, pension, &c. A muster-in roll, must in all cases, be filed in the Adjutant General's Office as evidence of muster-in. The mustering officer, commissary, or assistant commissary of musters, as the case may be, will countersign both enlistments as having mustered the soldiers into the service of the United States before either of them is given to the disbursing officer.

UNITED STATES COLORED TROOPS ENLISTMENT.

STATE OF Kentucky TOWN OF Accredited to

I, Petter Soryam born in Christian Co

in the State of Kentucky aged 25 years

and by occupation a Farmer Do HEREBY ACKNOWLEDGE to

have volunteered 20 day of January 1865,

to serve as a **Soldier** in the **Army of the United States of America,** for the period of THREE YEARS, unless sooner discharged by proper authority: Do also agree to accept such bounty, pay, rations, and clothing, as are, or may be, established by law for the U. S. colored troops.

And I, Petter Soryam of Christian Co. Ky. do solemnly swear that I will bear true faith and allegiance to the **United States of America,** and that I will serve them honestly and faithfully against all their enemies or opposers whomsoever; and that I will observe and obey the orders of the President of the United States, and the orders of the officers appointed over me, according to the Rules and Articles of War.

Sworn and subscribed to, at Paducah Ky
this 20 day of Jany 1865
Before Capt Jno H. Morgan

Petter his + Soryam
Mark

I CERTIFY, ON HONOR, That I have carefully examined the above named Volunteer agreeably to the General Regulations of the Army, and that, in my opinion, he is free from all bodily defects and mental infirmity, which would in any way disqualify him from performing the duties of a soldier.

P M Best EXAMINING SURGEON.

I CERTIFY, ON HONOR, That I have minutely inspected the Volunteer, Petter Sorian previously to his enlistment, and that he was entirely sober when enlisted; that, to the best of my judgment and belief, he is of lawful age; and that, in accepting him as duly qualified to perform the duties of an able-bodied soldier, I have strictly observed the regulations which govern the recruiting service. This soldier has Blk. *eyes,* Blk. *hair,* Blk. *complexion,* is 5 *feet* 3 1/2 *inches* high.

RECRUITING OFFICER OR AGENT.

Mustered into the United States Service 20 day of Jany 1865.

Jno H Morgan
Capt & Pay Mast Mustering Officer
1st Dist of Ky

Mustered into the service of the United States, for three years or during the war, from date of enlistment, in Company "B"
1st Regiment of U.S.C. Artillery Volunteers, on the 21 day of Jany, 1865, at Paducah Ky

Capt & Pay Mast
1st Dist of Ky

ARTICLES OF WAR.

ART. 95. When any non-commissioned officer or soldier shall die, or be killed in the service of the United States, the then commanding officer of the troop or company shall, in the presence of two other commissioned officers, take an account of what effects he died possessed of, above his arms and accoutrements, and transmit the same to the office of the Department of War, which said effects are to be accounted for, and paid to the representatives of such deceased non-commissioned officer or soldier. And in case any of the officers, so authorized to take care of the effects of deceased officers and soldiers, should, before they have accounted to their representatives for the same, have occasion to leave the regiment or post, by preferment or otherwise, they shall, before they be permitted to quit the same, deposit in the hands of the commanding officer, or of the assistant military agent, all the effects of such deceased non-commissioned officers and soldiers, in order that the same may be secured for, and paid to, their respective representatives.

ARMY REGULATIONS—EDITION OF 1861.

DECEASED SOLDIERS.

Par. 152. Inventories of the effects of deceased non-commissioned officers and soldiers, required by the 95th Article of War, will be forwarded to the Adjutant General, by the commander of the company to which the deceased belonged, and a duplicate of the same to the colonel of the regiment. Final statements of pay, clothing, &c., will be sent with the inventories. When a soldier dies at a post or station absent from his company, it will be the duty of his immediate commander to furnish the required inventory, and, at the same time, to forward to the commanding officer of the company to which the soldier belonged, a report of his death, specifying the date, place, and cause; to what time he was last paid, and the money or other effects in his possession at the time of his decease; which report will be noted on the next muster roll of the company to which the man belonged. Each inventory will be endorsed, "Inventory of the effects of ——— ———, late of company (—) ——— regiment of ———, who died at ———, the——— day of ———, 186-." If a legal representative receive the effects, it will be stated in the report. If the soldier leave no effects, the fact will be reported.

Par. 153. Should the effects of a deceased non-commissioned officer or soldier not be administered upon within a short period after his decease, they shall be disposed of by a Council of Administration, under the authority of the commanding officer of the post, and the proceeds deposited with the Paymaster, to the credit of the United States, until they shall be claimed by the legal representatives of the deceased.

Par. 154. In all such cases of sales by the Council of Administration, a statement in detail, or account of the proceeds, duly certified by the Council and commanding officer, accompanied by the Paymaster's receipt for the proceeds, will be forwarded by the commanding officer to the Adjutant General. The statement will be endorsed, "Report of the proceeds of the effects of ——— ———, late of company (—) ———. regiment of ———, who died at ———, the —— day of ———, 186-."

NOTE 1.—The effects in all cases, when called for, should be turned over to the legal representative, without further authority from the Adjutant General. When the effects are turned over to the relatives of the deceased before these inventories are sent to the Adjutant General, their receipts therefor should be attached to the inventories. In all other cases, one copy will be sent with a letter of transmittal direct to the Adjutant General, and a duplicate retained by the officer.

NOTE 2.—Particular care should be taken to take receipts in duplicate from the Paymaster for any funds turned over to him; one copy should be sent direct to the Adjutant General and one retained by the officer.

INVENTORY OF THE EFFECTS

OF

Private Peter Torien

Late of Company "B"

13th Reg't of U.S.C. Arty. (Hy.)

Volunteers, who died at Smithland Ky.

on the 26th day of January 1865.

Jul 17 1871

Inventory of the effects of Peter Torian late
a Private of Captain Geo E Sutherland Company "B" of
the 13th Regiment of U.S.C.Arty (Heavy) Volunteers, who was enrolled as
a Private at Paducah in the State of Kentucky on
the 20th day of January 1865, and mustered into the service of the United
States as a Private on the 20th day of January 1865, at Paducah Ky.
in Company "B"; 13th Regiment of U.S.C. Arty (Hy) Volunteers, to serve Three
years or during the war; he was born in Christian Co. in the State
of Kentucky; he was 25 years of age, 5' feet 8½ inches
high, Black complexion, Black eyes, Black hair, and by occupation, when enrolled,
a Farmer; he died in Regimental Hospital, at
Smithland Ky. on the 26th day of January 1865, by
reason of Pneumonia

INVENTORY.

Articles.	No.	Articles.	No.	Articles.	No.
Hats		Pairs trowsers		Knapsacks	1
Caps		Pairs flannel drawers			
Forage caps		Pairs cotton drawers			
Great coats		Flannel shirts			
Upiform coats		Cotton shirts			
Uniform jackets		Pairs boots			
Flannel sack coats		Pairs shoes			
Blouses		Pairs socks			
Stable frocks		Blankets		Money. Specie	$
Fatigue overalls		Haversacks	1	Notes	$

I certify, on honor, that the above inventory comprises all the effects of Private Peter Torian, deceased, and that the effects are in the hands of Capt. Geo. E. Sutherland at Smithland Ky. to be disposed of by a Council of Administration.

(DUPLICATES.)

Geo. E. Sutherland
Capt Co. "B" 13th U.S.C.H.A.
Commanding the Company.

Station: Smithland Ky.

Date: January 26th 1865

[A. G. O. No. 104.]

Extract from Act of Congress.

SEC. 12. *And be it further enacted,* That the fees of agents and attorneys for making out and causing to be executed the papers necessary to establish a claim for a pension, bounty, and other allowance before the Pension Office, under this act, shall not exceed the following rates: For making out and causing to be duly executed a declaration by the applicant, with the necessary affidavits, and forwarding the same to the Pension Office, with the requisite correspondence, ten dollars; which sum shall be received by such agent or attorney in full for all services in obtaining such pension, and shall not be demanded or received, in whole or in part, until such pension shall be obtained; and the sixth and seventh sections of an act entitled "An act to grant pensions," approved July [fourteenth,] eighteen hundred and sixty-two, are hereby repealed.

SEC. 13. *And be it further enacted,* That any agent or attorney who shall, directly or indirectly, demand or receive any greater compensation for his services under this act than is prescribed in the preceding section of this act, or who shall contract or agree to prosecute any claim for a pension, bounty, or other allowance under this act, on the condition that he shall receive a per centum upon any portion of the amount of such claim, or who shall wrongfully withhold from a pensioner or other claimant the whole or any part of the pension or claim allowed and due to such pensioner or claimant, shall be deemed guilty of a high misdemeanor, and, upon conviction thereof, shall, for every such offense, be fined not exceeding three hundred dollars, or imprisoned at hard labor not exceeding two years, or both, according to the circumstances and aggravations of the offense.

Approved July 4, 1864.

NOTE 10.—If any soldier is charged a higher fee than that allowed by the above act, he should report the fact and the name of the agent to the Adjutant General, in order that steps may be taken to have the same refunded.

ADJUTANT GENERAL'S OFFICE

Feby 14th 1865.

Duplicate with Inventory sent 2d Auditor.

FINAL STATEMENT

OF

Private Peter Torian

Co. "B" 13th Reg't of U.S.C. Arty. (Hy.)

VOLUNTEERS.

Enld June 2d 1863

NOTE 1.—*Two* of these certificates (or duplicates) are to be given to each Volunteer Soldier [illegible] drafted man who may be discharged without being mustered out, (Final Statements are never given to men mustered out of service) that he may at once receive from the Paymaster the pay, &c., due him, and the captain or other COMMISSIONED officer commanding the company will certify to the act of the delivery of the duplicate certificates; with these certificates the Soldier is "entitled to" his *discharge*, and should also present his discharge to the Paymaster to have the payment endorsed on it. The discharge is to be given back to the Soldier by the Paymaster; the latter only retaining as his vouchers the duplicate certificates.

NOTE 2.—If the Soldier is entitled to pay for the use of his horse, the Company Commander will certify to that fact on the back of both these final statements, and also to the time he has pay due for having been so mounted on his own horse.

NOTE 3.—When a Soldier is furnished with final statements, his descriptive list, if he has one, should be taken up by the officer who gives the Soldier these statements, and endorsed with a statement to this effect by the officer. The endorsement should exhibit a full statement of the time for which the Soldier was allowed pay on his final statements, the clothing account, and all other charges against him or in his favor, so as to comprise a complete exhibit of his account. It will then be transmitted to the Company Commander of the Soldier, who will enter all the data necessary to a full understanding of the Soldier's account on the muster roll upon which the Soldier's discharge is reported. The descriptive list will then be destroyed. The object of this is, that the remaining portion of the Soldier's account may be settled upon the receipt of these muster rolls, and the Soldier receive any pay or allowances that may be due him at the time of his discharge, and which may not appear on his last final statements from the fact that his descriptive list is incomplete. These accounts for back pay, &c., are settled by the 2d Auditor of the Treasury Department.

NOTE 4.—Charges for loss or injury to ordnance, horse equipments, and other miscellaneous charges, should appear under the heading of "Other Stoppages."

NOTE 5.—Bounty paid by State authorities, and not by the United States, will not be entered on this statement.

NOTE 6.—Amounts due the Sutler and Laundress must be entered on the muster roll on which the discharge, death, desertion, &c., is reported, as well as on the final statement, otherwise the amount cannot be collected from the United States.

NOTE 7.—This blank will be used for deceased volunteers and drafted men, as well as for others.

NOTE 8.—Where a Soldier dies in Hospital or on detached service, his descriptive list, if he has one, should be sent with his final statements, in duplicate, to the Adjutant General, Washington, D. C.

NOTE 9.—If the soldier is a drafted man or substitute, the space for time, &c., of enrolled, should contain only the word *drafted* or *substitute*, as the case may be. If the Soldier is a "VETERAN," (or RECRUIT,) the words *as a veteran*, (or *recruit*,) as the case may be, should be interlined after the words *mustered into the service of the U. S.* A statement of all the instalments of *Veteran* or *Recruit Bounty* RECEIVED by the Soldier must be made on the back of each final statement.

[illegible]

I certify, on honor, that Peter Torian, a Private of Captain Geo. E. Sutherlands Company ("B") of the 13th Regiment of U.S.C.Artly. (Heavy) VOLUNTEERS, of the State of _____, born in Christian Co., State of Kentucky, aged 25 years; 5 feet 3½ inches high; Black complexion, Black eyes, Black hair, and by occupation a Farmer, who joined for service and was enrolled (see Note 9) on the 20th day of Jan., 1865, at Paducah Ky. by Capt. J. H. Morgan, for the period of Three years, and mustered into the service of the United States on the 20th day of January, 1865, at Paducah Ky., by Capt. J. H. Morgan; and having served HONESTLY and FAITHFULLY with his Company to the present date, is now entitled to a DISCHARGE by reason of Death (A.G.O. Let's Jany 26th 1865 see Inventory 7th)

The said Private Peter Torian was last paid by Paymaster _____, to include the _____ day of _____, 186 , and has pay due him from ~~that time~~ Enlistment to the present date; he is entitled to pay and subsistence for TRAVELING to place of enrollment, and whatever other allowances are authorized to volunteer soldiers, drafted men, or militia, so discharged. He has received from the United States CLOTHING amounting to Twenty Eight (28) 04/100 dollars, since the _____ day of Enlistment, 186 , when his clothing account was last settled. He has received from the United States _____ 100 dollars advanced BOUNTY.

There is to be stopped from him, on account of the State of _____, or other authorities, for CLOTHING, &c., received on entering service, _____ 100 dollars; and for other stoppages, viz: _____

_____

_____ 100 dollars.

He has been furnished with TRANSPORTATION in kind from the place of his discharge to _____; and he has been SUBSISTED for TRAVELING to his place of enrollment, up to the _____, 186 .

He is indebted to _____, SUTLER, _____ 100 dollars.

He is indebted to _____, LAUNDRESS, _____ 100 dollars.

Given in Duplicate, at Smithland Kentucky, this 26th day of January, 1865.

Geo. E. Sutherland
Capt. 13th U.S.C.H.A.
Commanding Company. "B"

[A G O No 95—Print.]

2097

Jordann William

Co L, 13 U.S.Col'd H. Art'y.

Private

CARD NUMBERS.

1	26
2	27
3 See Joryann William	28
4	29
5	30
6	31
7	32
8	33
9	34
10	35
11	36
12	37
13	38
14	39
15	40
16	41
17	42
18	43
19	44
20	45
21	46
22	47
23	48
24	49
25	50

Book Mark.

See also

2098

Torrey. Richard

Co. H, 13 U.S.Col'd H. Art'y.

Private	Private

CARD NUMBERS.

1	55 1853 6	26	
2	55 1796 0	27	
3	55 2395 7	28	
4	55 2413 2	29	
5	55 2428 0	30	
6	91 2928	31	
7		32	
8		33	
9		34	
10		35	
11		36	
12		37	
13		38	
14		39	
15		40	
16		41	
17		42	
18		43	
19		44	
20		45	
21		46	
22		47	
23		48	
24		49	
25		50	

Book Mark:

See also Geo F. 121. U.S.C.H. Art'y

9 | 13 H. Art'y. | U.S.C.T.

Richard Toney

....., Co. H, 13 Reg't U.S. Col'd H. Art'y.

Appears on

Company Descriptive Book

of the organization named above.

DESCRIPTION.

Age 18 years; height 5 feet 6½ inches.

Complexion Dark

Eyes Dark; hair Dark

Where born Sampson Co., N.C.

Occupation Laborer

ENLISTMENT.

When May 29, 1863.

Where Piketon Ky

By whom Lt Col Clapp; term 3 y'rs.

Remarks: died July 16 '65
in Nelson U.S.G. Hospt
Camp Nelson Ky of
remittent Fever

Beck

(383*g*) **Copyist.**

7 | 13 H. Art'y. | U.S.C.T.

Richard Tracy

Pvt, Co. A, 13 Reg't U. S. Col'd H. Art'y.

Appears on

M. and D. Roll of Men Transferred

to the organization named above,

from Co. F, 121 Reg't U. S. Colored Infantry.

Roll dated Camp Nelson Ky. June 23, 1865.

When enlisted May 29, 1865.

Period for which enlisted 3 years.

When mustered in June 5, 1865.

Present or absent Not stated

Company to which assigned

Remarks:

Book mark:

Rochester

(342) *Copyist.*

G | 13 H. Art'y. | U.S.C.T.

Richard Foucu

Pvt., Co. ....., 13 Reg't U. S. Col'd H. Art'y.

Appears on

M. and D. Roll of Men Transferred

to the organization named above,

from Co....., 121 Reg't U. S. Colored Infantry.

Roll dated June 23, 1865.

When enlisted May 29, 1865.

Period for which enlisted 3 years.

When mustered in June 6, 1865.

Present or absent Not stated

Company to which assigned H

Remarks: Credited to Pike Co.

9 D. Ky.

Book mark :

C. Williams,

(342) *Copyist.*

I | 13th Ky. | U.S.C.T.

Richard Jones

Pvt., Co. 26, 13 Reg't U. S. Col'd Inf.

Age ..... years.

Appears on

Company Muster Roll*

for May & June, 1865.

Joined for duty and enrolled:

When May 29, 1865.

Where Pikeville Ky

Period 3 years.

Mustered in:

When June 5, 1865.

Where Lumpsburg Ky

Present or absent Present

Stoppage, $.....100 for.....

Due Gov't, $.....100 for.....

Valuation of horse, $.....100

Valuation of horse equipments, $.....100

Remarks: .....

*First current roll. No muster-in roll of this company on file.

Book mark: .....

W. W. Wallace

(358*b*) *Copyist.*

13 H. Art'y. | U.S.C.T.

Richard Toney

Pt, Co. H, 13 Reg't U. S. Col'd H. Art'y.

Appears on

Company Muster Roll

for July & Aug, 1865.

Present or absent

Stoppage, $ 100 for

Due Gov't, $ 100 for

Valuation of horse, $ 100

Valuation of horse equipments, $ 100

Remarks: died in Ky Genl Hospl Camp Nelson Ky July 16 '65 of Remittent fever.

NEXT ROLL ON FILE MUSTER OUT.

Book mark :

(358) *Copyist.*

13 H. Art'y. | **U.S.C.T.**

Richard Toney

Pvt., Co. K, 13 Reg't U. S. Col'd H. Art'y.

Appears on **Co. Muster-out Roll,** dated Mustered Out, Nov 1, 1865.

Muster-out to date ....., 186 .

Last paid to Never Paid, 186 .

Clothing account:

Last settled ....., 186 ; drawn since $ 100

Due soldier $ ..... 100 ; due U. S. $ 100

Am't for cloth'g in kind or money adv'd $ 100

Due U. S. for arms, equipments, &c., $ 100

Bounty paid $ ..... 100 ; due $ 100

Remarks: Died in Nelson Genl Hospl. Camp Nelson Ky July 16 '65 of Intermittent Fever

Book mark: .....

(361) *Copyist.*

Tovey, Richard

P, Co. H, 13 Reg't U S C H A.

3 Enclosures.

Bed Cards	Descriptive Lists
Burial Records /	Final Statements /
Certs. of Dis. for Discharge	Furloughs
C. M. Charges	Med. Des. Lists
Med. Certificates	Orders

Other papers relating to—

Admission to Hosp'l	Furlough
Casualty Sheet (Officer's)	Med. Examination
Confinement	Misc. Information
Contracts	Pay or Clothing
Death or Effects /	Personal Reports
Desertions	Rank
Discharge from Hosp'l	Transfer to Hosp'l
Discharge from Service	Transfer to V. R. C.
Duty	Transportation

MICROFILM PUBLICATION M 1834

COMPILED MILITARY SERVICE RECORDS
OF VOLUNTEER UNION SOLDIERS WHO SERVED WITH
THE UNITED STATES COLORED TROOPS (USCT)
13TH REGIMENT OF HEAVY ARTILLERY

PERSONAL PAPERS' TARGET SHEET

PLEASE NOTE THE CHECKED INFORMATION ABOUT THE PERSONAL PAPERS IN THIS FILE:

☐ NO PERSONAL PAPERS WERE FOUND IN THIS FILE WHEN THE RECORDS WERE ARRANGED FOR MICROFILMING.

☑ 2 PERSONAL PAPER(S) FOUND IN THIS FILE WHEN THE RECORDS WERE ARRANGED FOR MICROFILMING.

Co. D to 21st 1865

Amount Due Pvt Richard Toney

for effects value $2.50

Amt Due Co. 2.75

Died July 16 1865

Effects value $2.50

Duplicate with Inventory sent 21st Regt.

FINAL STATEMENT

OF

Pvt Richard Toney

18th Co. "K" 1st Regt of U.S. Col'd Hy artillery

VOLUNTEERS.

Died July 16th 1865.

NOTE 1.—*Two* of these certificates (or duplicates) are to be given to each Volunteer Soldier or drafted man who may be discharged without being mustered out (Final Statements are never given to men mustered out of service,) that he may at once receive from the Paymaster the pay, &c., due him, and the captain or other COMMISSIONED officer commanding the company will certify to the act of the delivery of the duplicate certificates; with these certificates the Soldier is "entitled to" his *discharge*, and should also present his discharge to the Paymaster to have the payment endorsed on it. The discharge is to be given back to the Soldier by the Paymaster; the latter only retaining as his vouchers the duplicate certificates.

NOTE 2.—If the Soldier is entitled to pay for the use of his horse, the Company Commander will certify to that fact on the back of both these final statements, and also to the time he has pay due for having been so mounted on his own horse.

NOTE 3.—When a Soldier is furnished with final statements, his descriptive list, if he has one, should be taken up by the officer who gives the Soldier these statements, and endorsed with a statement to this effect by the officer. The endorsement should exhibit a full statement of the time for which the Soldier was allowed pay on his final statements, the clothing account, and all other charges against him or in his favor, so as to comprise a complete exhibit of his account. It will then be transmitted to the Company Commander of the Soldier, who will enter all the data necessary to a full understanding of the Soldier's account on the muster roll upon which the Soldier's discharge is reported. The descriptive list will then be destroyed. The object of this is, that the remaining portion of the Soldier's account may be settled upon the receipt of these muster rolls, and the Soldier receive any pay or allowances that may be due him at the time of his discharge, and which may not appear on his last final statements from the fact that his descriptive list is incomplete. These accounts for back pay, &c., are settled by the 2d Auditor of the Treasury Department.

NOTE 4.—Charges for loss or injury to ordnance, horse equipments, and other miscellaneous charges, should appear under the heading of "Other Stoppages."

NOTE 5.—Bounty paid by State authorities, and not by the United States, will not be entered on this statement.

NOTE 6.—Amounts due the Sutler and Laundress must be entered on the muster roll on which the discharge, death, desertion, &c., is reported, as well as on the final statement, otherwise the amount cannot be collected from the United States.

NOTE 7.—This blank will be used for deceased volunteers and drafted men, as well as for others.

NOTE 8.—Where a Soldier dies in Hospital or on detached service, his descriptive list, if he has one, should be sent with his final statements, in duplicate, to the Adjutant General, Washington, D. C.

NOTE 9.—If the soldier is a drafted man or substitute, the space for time, &c., of enrolled, should contain only the word *drafted* or *substitute*, as the case may be. If the Soldier is a "VETERAN," (or RECRUIT,) the words *as a veteran*, (or *recruit*,) as the case may be, should be interlined after the words *mustered into the service of the U. S.* A statement of all the installments of *Veteran* or *Recruit Bounty* RECEIVED by the Soldier must be made on the back of each final statement.

I certify, on honor, that Richard Tovey, a Private of Captain _____ Company (H) of the 13th Regiment of U. S. C. Hy Art. VOLUNTEERS, ~~of the State of~~ _____, born in Sampson County, State of North Carolina, aged 18 years; 5 feet 7 8 inches high; Dark complexion, Dark eyes, Dark hair, and by occupation a Laborer, who joined for service and was enrolled (see Note 9) on the 29th day of May, 1865, at Pikestown Ky by St. George B Clapp, for the period of Three years, and mustered into the service of the United States on the Fifth day of June, 1865, at Crumpsburg Ky, by Capt W. B. Glair; and having served HONESTLY and FAITHFULLY with his Company to the present date, ~~is now entitled to a~~ DISCHARGE by reason of his death, occurring in Nelson Genl Hospt at Camp Nelson Ky of Remittent Fever, July 16th 1865.

The said Private Richard Tovey was last paid by Paymaster Pears Paid, to include the _____ day of _____, 186 , and has pay due him from that time to the present date; he is entitled to pay and subsistence for TRAVELING to place of enrollment, and whatever other allowances are authorized to volunteer soldiers, drafted men, or militia, so discharged. He has received from the United States CLOTHING amounting to Thirty Four 00/100 dollars, since the _____ day of Enrollment 186 , when his clothing account was last settled. He has received from the United States Bro _____/100 dollars advanced BOUNTY.

There is to be stopped from him, on account of the State of _____, or other authorities, for CLOTHING, &c., received on entering service, _____/100 dollars; and for other stoppages, viz: Quarters of Effects forwarded by Daniel Baxter Surgeon U. S. Vols in charge of Hospt Nº 1 in which the above named Soldier died, through some how or, designated therein, as a member of Co F of this Regiment _____/100 ~~dollars.~~

He has been furnished with TRANSPORTATION in kind from the place of his discharge to _____; and he has been SUBSISTED for TRAVELING to his place of enrollment, up to the _____, 186 .

He is indebted to A. C. Jones, SUTLER, Five 00/100 dollars.

He is indebted to _____, LAUNDRESS, _____/100 dollars.

Given in Duplicate, at Camp Nelson Ky, this 18th day of July, 1865.

Frederick Bechtel
Capt 121st Regt U S C Infty
Commanding Company

[A. G. O. No. 95—First.]

Head Quarters Camp of Distribution,

(Late Convalescent Camp.)

CAMP NELSON, KY., ... 1864

To the Commanding Officer of

Co .....

Sir :

.....

of your company has been paid in this Camp by Major .....

Paymaster, U. S. A., for the months of .....

and has obtained the following articles of clothing, all which you are required to charge on your company rolls :

Hats.	Caps.	Pants	Dress Coats.	Overcoats.	Jackets.	Blouses.	Shirts.	Drawers.	Boots. pr.	Shoes, pr	Socks,	Blankets	Ponchas.	Knapsacks	Haversacks	Canteens.							TOTAL VALUE, $

Very Respectfully yours,

.....

Commandant of the Camp.

Richard Drury
Co. "G" 13th Ky Vol
Feby 16. 1865.
Cav'l Hosp. Camp Nelson, Ky

RECORD OF DEATH AND INTERMENT

Name and number of person interred	Richard Torrey
Number and locality of the grave	1255
Hospital number of the deceased	7582
Regiment rank and company	Pr Co. "G" 18th U.S. Col'd Heavy Art'y
Residence before enlistment	
Conjugal relation if married the residence of the widow	
Cause of death	Remittent Fever
Age of the deceased	
Nativity	
References and remarks	
Date of death and burial	July 16th 1865.

Effects

one Coat

" Drawers

" Blanket

" Shoes

2099.

Foryann. William

Co C, 13 U.S.Col'd H. Art'y.

Private	Private

CARD NUMBERS.

1	5-5-15-874	26	
2	5-5-16900	27	
3	5-5-21537	28	
4	5-5-21708	29	
5	5-5-21887	30	
6	5-5-22030	31	
1	9128414	32	
8		33	
9		34	
10		35	
11		36	
12		37	
13		38	
14		39	
15		40	
16		41	
17		42	
18		43	
19		44	
20		45	
21		46	
22		47	
23		48	
24		49	
25		50	

Book Mark:

See also

S-750442 – P.G. Jr. & Jr. Rita.

J. K. Vincent Esq

I | 13 H. Art'y. | U.S.C.T.

William Swann

....., Co. C, 13 Reg't U.S. Col'd H. Art'y.

Appears on

Company Descriptive Book

of the organization named above.

DESCRIPTION.

Age 21 years; height 5 feet 6 inches.

Complexion black

Eyes black; hair black

Where born Bourbon Kentucky

Occupation Laborer

ENLISTMENT.

When Sept 1, 186 5.

Where Paducah Ky

By whom Capt Morgan; term 3 y'rs.

Remarks:

Isaac A

(383*g*) *Copyist.*

T | **13** H. Art'y. | **U.S.C.T.**

William Towrans

Appears with rank of Pvt on

Muster and Descriptive Roll of a Detachment of U. S. Vols. forwarded

for the 13 Reg't U. S. Col'd H. Art'y. Roll dated

Paducah, Ky, Feb. 27, 1865.

Where born Christian Co. Ky

Age 26 y'rs; occupation Laborer

When enlisted Feb. 1, 1865.

Where enlisted Paducah, Ky

For what period enlisted 3 years.

Eyes Black; hair Black

Complexion Black; height 5 ft. 6 in.

When mustered in Feb. 1, 1865.

Where mustered in Paducah Ky

Bounty paid $ 100; due $ 100

Where credited Christian Co. 2d Dist of Ky

Company to which assigned C

Remarks:

Book mark:

Hammer

(339) *Copyist.*

I | 13 H. Art'y. | U.S.C.T.

Gilliam Toriano

Pvt, Co. C, 13 Reg't U. S. Col'd H. Art'y.

Age ..... years.

Appears on

Company Muster Roll*

for to Apr 30, 1865.

Joined for duty and enrolled:

When Feb 1, 1865.

Where Paducah Ky

Period 3 years

Mustered in:

When Feb 1, 1865.

Where Paducah Ky

Present or absent Present

Stoppage, $ 100 for .....

Due Gov't, $ 100 for .....

Valuation of horse, $ 100

Valuation of horse equipments, $ 100

Remarks: .....

* First current roll. No muster-in roll of this company on file.

Book mark: .....

Jan Stukis

(3586) Copyist.

Y | **13** H. Art'y. | **U.S.C.T.**

William Gorman

Appears with rank of Pvt on

Muster and Descriptive Roll of a Detachment of U. S. Vols. ~~forwarded~~ organized

for the 13 Reg't U. S. Col'd H. Art'y. Roll dated

Camp Nelson, Ky, June 23 1863.

Where born Christian, Kentucky

Age 26 y'rs; occupation Laborer

When enlisted Feb 1, 1863.

Where enlisted Paducah, Ky,

For what period enlisted 3 years.

Eyes Black; hair Black

Complexion Black; height 5 ft. 6 in.

When mustered in Feb 1, 1863.

Where mustered in Paducah Ky

Bounty paid $~~Non~~100; due $100

Where credited 7 Cong. Dist. Ky

Company to which assigned C

Remarks:

Book mark:

D. Taylor

(339) *Copyist.*

I | 13 H. Art'y. | U.S.C.T.

William Farrand

Pt, Co. C, 13 Reg't U. S. Col'd H. Art'y.

Appears on

Company Muster Roll

for May & June, 186 4.

Present or absent Present

Stoppage, $ 100 for

Due Gov't, $ 100 for

Valuation of horse, $ 100

Valuation of horse equipments. $ 100

Remarks: No County Road, Place first Install-ment County

FROM SECOND AUDITOR'S ROLL.

Book mark:

Vanstrikn

(358) *Copyist.*

G | 13 H. Art'y. | U.S.C.T.

William Gorman

St, Co. C, 13 Reg't U. S. Col'd H. Art'y.

Appears on

Company Muster Roll

for July & Aug, 186 5.

Present or absent Present

Stoppage, $ 100 for

Due Gov't, $ 100 for

Valuation of horse, $ 100

Valuation of horse equipments. $ 100

Remarks: Age given at enlistment Twenty, $100.00

NEXT ROLL ON FILE MUSTER OUT.

Book mark:

Van Hanton

(358) Copyist.

9 | **13 H. Art'y.** | **U.S.C.T.**

William Jorgan

Pt., Co. A, 13 Reg't U. S. Col'd H. Art'y.

Appears on **Co. Muster-out Roll,** dated Louisville Ky, Nov 15, 186 5.

Muster-out to date Nov 15, 186 5.

Last paid to June 30, 186 5.

Clothing account:

Last settled ....., 186 ; drawn since $ 100

Due soldier $ ..... 100; due U. S. $ 13 31/100

Am't for cloth'g in kind or money adv'd $ 100

Due U. S. for arms, equipments, &c., $ 100

Bounty paid $ 100 00/100; due $ 100

Remarks: .....

.....

.....

.....

.....

.....

Book mark: .....

---

(361) Van Stanton

Copyist.

Doran, William

....., Co. ....., 13 Reg't H S C.A.

/ **Enclosures.**

Bed Cards	Final Statements
Burial Records	Furloughs or L. of A.
Certs. of Dis. for Discharge	Med. Certificates
C. M. Charges	Med. Des. Lists
Descriptive Lists	Orders
Discharge Certificates	Pris. of War Record
Enlistment Papers /	Resignations

Other papers relating to—

Admission to Hosp'l	Furlough or L. of A.
Casualty Sheet	Med. Examination
Confinement	Misc. Information
Contracts	Pay or Clothing
Death or Effects	Personal Reports
Desertion	Rank
Discharge from Hosp'l	Transfer to Hosp'l
Discharge from Service	Transfer to V. R. C.
Duty	Transportation

NOTE 1.—This blank will be used for enlistments of United States colored troops. They will be made out in duplicate in all cases—one to accompany the recruiting return of the superintendent (not the recruiting officer) to the Adjutant General, and one to accompany the accounts of the officer who pays bounty, &c.

NOTE 2.—An enlistment holds to pay, bounty, pension, &c. A muster-in must, in all cases, be filed in the Adjutant General's Office as evidence of muster-in. The mustering officer, commissary, or assistant commissary of musters, as the case may be, will countersign both enlistments as having mustered the soldiers into the service of the United States before either of them is given to the disbursing officer.

DECLARATION OF RECRUIT.

I, William Lorian of Christian Co 2nd Dist Ky desiring to volunteer as a soldier in the ARMY OF THE UNITED STATES, for the term of *Three Years*, DO DECLARE That I am 26 years and 1 months of age; that I have never been discharged from the United States service on account of disability or by sentence of a court-martial, or by order before the expiration of a term of enlistment; and I know of no impediment to my serving honestly and faithfully as a soldier for three years.

GIVEN at Paducah Ky

the 1st day of July 1865

Witness: E R Bruckner

his
Wm x Lorian
mark

No. Ninety-One

Volunteered at Paducah Ky

July 1st 1865

By Capt Geo Bruckner

Pay Master 16th Regt

Pvt Co "I"

Consent of Parent or Guardian in case of a Minor, if a Free Man, or in the case of a Slave, of the Person to whom he owes Service:

I, ... DO CERTIFY, That I am

the .....

.....

that the said ..... is ..... years of age; and I do freely give my CONSENT to his volunteering as a SOLDIER in the Army of the United States, for the period of THREE YEARS, under the conditions of the laws of the United States.

GIVEN at .....

the ..... day of .....

Witness:

.....

.....

(A. G. O. No. 74 & 76.)

UNITED STATES COLORED TROOPS ENLISTMENT.

STATE OF Kentucky. TOWN OF Accredited to Christian Co. 2nd Dist Ky

I, Wm Forian born in Christian

in the State of Ky. aged Twenty Six years

and by occupation a Laborer Do HEREBY ACKNOWLEDGE to

have volunteered First day of Feby 1865

to serve as a **Soldier** in the **Army of the United States of America,** for the period of THREE YEARS, unless sooner discharged by proper authority: Do also agree to accept such bounty, pay, rations, and clothing, as are, or may be, established by law for the U. S. colored troops.

And I, William Forian of Christian Co 2nd Dist Ky do solemnly swear that I will bear true faith and allegiance to the **United States of America,** and that I will serve them honestly and faithfully against all their enemies or opposers whomsoever; and that I will observe and obey the orders of the President of the United States, and the orders of the officers appointed over me, according to the Rules and Articles of War.

Sworn and subscribed to, at Paducah Ky

this 1st day of Feby 1865

Before

his
Wm X Forian
mark.

I CERTIFY, ON HONOR, That I have carefully examined the above named Volunteer agreeably to the General Regulations of the Army, and that, in my opinion, he is free from all bodily defects and mental infirmity, which would in any way disqualify him from performing the duties of a soldier.

J M Bird

EXAMINING SURGEON.

I CERTIFY, ON HONOR, That I have minutely inspected the Volunteer, Wm Forian previously to his enlistment, and that he was entirely sober when enlisted; that, to the best of my judgment and belief, he is of lawful age; and that, in accepting him as duly qualified to perform the duties of an able-bodied soldier, I have strictly observed the regulations which govern the recruiting service. This soldier has Blk. *eyes,* Blk. *hair,* Blk. *complexion,* is five *feet* six *inches* high.

RECRUITING OFFICER OR AGENT.

Mustered into the United States Service 1st day of Feby 1865.

Jno H Morgan
Capt 2d Inf & Mustering Officer.
1st Dist Ky

Mustered into the service of the United States, for three years or during the war, from date of enlistment, in Company 1st day of Feby, 1865, at Paducah Ky

By Capt Morgan
Capt 2d Inf
1st Dist Ky

2100

Forman. Rufus

Co a, 13 U.S.Col'd H. Art'y.

Private | Private

CARD NUMBERS.

1	5-5-16 5-18	26	
2	5-5-1983 7	27	
3	5-5-1996 0	28	
4	5-5-20104	29	
5	5-5-2025-6	30	
6	5-5-20423	31	
7	5-5-205-67	32	
8	9 1 2 8 0 5 5	33	
9	4 3 1 3 5 9 9 8	34	
10		35	
11		36	
12		37	
13		38	
14		39	
15		40	
16		41	
17		42	
18		43	
19		44	
20		45	
21		46	
22		47	
23		48	
24		49	
25		50	

Book Mark:

See also

A2960701 Cornell

1 | 13 H. Art'y. | U.S.C.T.

Lafayette Forgman

....., Co. A, 13 Reg't U. S. Col'd H. Art'y.

Appears on

Company Descriptive Book

of the organization named above.

DESCRIPTION.

Age 26 years; height 5 feet 6½ inches.

Complexion Black

Eyes Blk; hair Blk

Where born Christian Co Kentucky

Occupation Farmer

ENLISTMENT.

When Aug 16, 186 4.

Where Bowling Green

By whom Capt Hobson; term 3 y'rs.

Remarks: .....

Deserted

(383*g*) **Copyist.**

I | 13 H.A | USCT

Rufus Tosian

Appears with rank of Pvt on

Muster and Descriptive Roll

of a Detachment of U.S. Cvrd recruits forwarded for 13 Regt U.S. Cvrd H. Artly. Roll dated Bowling Green Ky, Oct 31, 1864.

Where born Christian Co Ky

Age 26 years; occupation Farmer

When enlisted Oct 17, 1864.

Where enlisted B. Green Ky

For what period enlisted 3 years.

Eyes Brown; hair Blk

Complexion Blk; height 5 ft. 6½ in.

When mustered in ____, 186 .

Where mustered in ____

Bounty paid $ 100; due $ 100

Clothing account:

Last settled ____, 186 ; drawn since $ 18 30/100

Date of first muster Oct 16, 1864.

Company to which assigned ____

Remarks: New recruit Christian Co. Cvrd Service to Mary Tosian

Book mark: ____

G. L. Hall

(356m) Copyist.

F | 13 H. Art'y. | U.S.C.T.

Rufus Toynman

Priv, Co. A, 13 Reg't U. S. Col'd H. Art'y.

Age ..... years.

Appears on

Company Muster Roll*

for to Dec 31, 186 4.

Joined for duty and enrolled:

When Oct. 16, 186 4.

Where Bowling Green Ky

Period 3 years

Mustered in:

When Oct. 16, 186 4.

Where Bowling Green Ky

Present or absent Present

Stoppage, $ 100 for .....

Due Gov't, $ 100 for .....

Valuation of horse, $ 100

Valuation of horse equipments, $ 100

Remarks: .....

* First current roll. No muster-in roll of this company on file.

Book mark: .....

W. O. Hughes

(3586) Copyist.

I | 13 H. Art'y. | U.S.C.T.

Rufus Jorgeman

Priv., Co. A, 13 Reg't U. S. Col'd H. Art'y.

Appears on

Company Muster Roll

for Jan & Feb, 186 5.

Present or absent Present

Stoppage, $ 100 for

Due Gov't, $ 100 for

Valuation of horse, $ 100

Valuation of horse equipments, $ 100

Remarks:

Due $40 first installment of Gov Bounty.

Book mark:

W. F. Hughes

(358) Copyist.

5 | 13 H. Art'y. | U.S.C.T.

Rufus Gorryman

Priv, Co. A, 13 Reg't U. S. Col'd H. Art'y.

Appears on

Company Muster Roll

for March & Apr, 186 5.

Present or absent Present

Stoppage, $ 100 for

Due Gov't, $ 100 for

Valuation of horse, $ 100

Valuation of horse equipments, $ 100

Remarks:

Book mark:

(358) Copyist.

F | **13** H. Art'y. | **U.S.C.T.**

Ranzo Sargeant

Appears with rank of Pvt. on

Muster and Descriptive Roll of a Detachment of U. S. Vols. forwarded

Descriptive Book.
Co. A,
for the 13 Reg't U. S. Col'd H. Art'y. Roll dated

Camp Nelson, Ky, June 23, 1865.

Where born Christian, Ky.

Age 21 y'rs; occupation Farmer

When enlisted Oct. 16, 1864.

Where enlisted B. Green, Ky.

For what period enlisted 3 years.

Eyes Blk; hair Blk.

Complexion Blk; height 5 ft. 6½ in.

When mustered in Oct. 16, 1864.

Where mustered in B. Green, Ky.

Bounty paid $100; due $100

Where credited

Company to which assigned A.

Remarks:

Book mark:

Copyist.

5 | 13 H. Art'y. | U.S.C.T.

Rufus Toryman

Pvt, Co. A, 13 Reg't U. S. Col'd H. Art'y.

Appears on

Company Muster Roll

for May & June, 186 5.

Present or absent Present

Stoppage, $ 95/100 for Gov't Ex

Due Gov't, $ 100 for

Valuation of horse, $ 100

Valuation of horse equipments, $ 100

Remarks: 1st Installment Bounty due.

FROM SECOND AUDITOR'S ROLL.

Book mark:

W. O. Hughes

(358) Copyist.

F | **13 H. Art'y.** | **U.S.C.T.**

Rufus Gorgman

Priv., Co. A, 13 Reg't U. S. Col'd H. Art'y.

Appears on

Company Muster Roll

for July & Aug, 186 5.

Present or absent Present

Stoppage, $ 100 for

Due Gov't, $ 100 for

Valuation of horse, $ 100

Valuation of horse equipments, $ 100

Remarks: Due 1st Installment

Inst Bounty $100

NEXT ROLL ON FILE MUSTER OUT.

Book mark:

W. F. Hughes

Copyist.

(358)

F | 13 H. Art'y. | U.S.C.T.

Rufus Foyman

Pvt, Co. A, 13 Reg't U. S. Col'd H. Art'y.

Appears on **Co. Muster-out Roll,** dated Louisville Ky, Nov. 18, 186 5.

Muster-out to date Nov. 18, 186 5.

Last paid to June 30 186 5.

Clothing account:

Last settled ....., 186 ; drawn since $ 100

Due soldier $ ..... 100; due U. S. $ 8 00/100

Am't for cloth'g in kind or money adv'd $ 100

Due U. S. for arms, equipments, &c., $ 100

Bounty paid $ 100 00/100; due $ 100

Remarks: .....

Book mark: 1691-1878

4871/80

P. J. Hughes

Copyist.

(361)

2101

Toucey Richard

Co ....., 13 U.S.Col'd H. Art'y.

Private

CARD NUMBERS.

1	26
2	27
3 See Tommy Richard	
4	29
5	30
6	31
7	32
8	33
9	34
10	35
11	36
12	37
13	38
14	39
15	40
16	41
17	42
18	43
19	44
20	45
21	46
22	47
23	48
24	49
25	50

Book Mark: .....

See also .....

2102

Touchin. William

Co D, 13 U.S.Col'd H. Art'y

Private | Private

CARD NUMBERS.

1	5-5-17233	26	
2	5-5-15896	27	
3	5-5-15-999	28	
4	5-5-22194	29	
5	5-5-22352	30	
6	5-5-2252-02	31	
7	9128599	32	
8		33	
9		34	
10		35	
11		36	
12		37	
13		38	
14		39	
15		40	
16		41	
17		42	
18		43	
19		44	
20		45	
21		46	
22		47	
23		48	
24		49	
25		50	

Book Mark:

See also

I | 13 H. Art'y. | U.S.C.T.

William Fountain

....., Co. I, 13 Reg't U. S. Col'd H. Art'y.

Appears on

Company Descriptive Book

of the organization named above.

DESCRIPTION.

Age 23 years; height 5 feet 11½ inches.

Complexion Dk

Eyes Blk; hair Blk

Where born Alabama

Occupation Waiter

ENLISTMENT.

When Mar 14, 1863.

Where Chicago Ill

By whom Capt James; term 1 y'rs.

Remarks:

Deserted

(383*g*) **Copyist.**

I | 13 H. Art'y. | U.S.C.T.

William Gouchin

Appears with rank of Pvt on

Muster and Descriptive Roll of a Detachment of U. S. Vols. ~~forwarded~~ Returned

for the 13 Reg't U. S. Col'd H. Art'y. Roll dated

Nov 22nd, , 186 .

Where born Alabama

Age 23 y'rs; occupation Waiter

When enlisted Mar 14, 1863.

Where enlisted Chicago, Ill.

For what period enlisted 1 years.

Eyes Blk; hair Blk

Complexion Blk; height 5 ft. 6½ in.

When mustered in Mar 14, 1863.

Where mustered in Chicago, Ill.

Bounty paid $ 100; due $ 100 00

Where credited 1 Cong. Dist. Ill.

Company to which assigned 20

Remarks:

Book mark:

D Taylor

(339) *Copyist.*

F | 13 H. Art'y. | U.S.C.T.

William Touchin

Appears with rank of Pvt on

Muster and Descriptive Roll of a Detachment of U. S. Vols. forwarded

for the 13 Reg't U. S. Col'd H. Art'y. Roll dated

Chicago Ill., Mar. 14, 1865.

Where born Alabama

Age 23 y'rs; occupation Hostler

When enlisted Mar. 14, 1865.

Where enlisted Chicago Ill

For what period enlisted 1 years.

Eyes Blk; hair Blk

Complexion Blk; height 5 ft. 6 1/2 in.

When mustered in Mar. 14, 1865.

Where mustered in Chicago, Ill.

Bounty paid $ 100; due $ 100

Where credited Chicago, Cook Co. 1st Dist. 3d Sub. Dist. Ill.

Company to which assigned D

Remarks:

Book mark:

Hammer

(339) Copyist.

I | 13 H. Art'y. | U.S.C.T.

Wm Touchen

Appears with rank of Put on

Muster and Descriptive Roll of a Detachment of U. S. Vols. forwarded

for the 13 Reg't U. S. Col'd H. Art'y. Roll dated

Camp Butler Ill., Mch 23, 1865.

Where born Alabama

Age 23 y'rs; occupation Waiter

When enlisted Mch 14, 1865.

Where enlisted Chicago Ill

For what period enlisted 1 years.

Eyes Blk; hair Blk

Complexion Blk; height 5 ft. 6½ in.

When mustered in Mch 14 1865.

Where mustered in Chicago Ill

Bounty paid $ 100; due $ 100 100

Where credited Chicago Cook Co Ill
1 Dist 38 S.D.

Company to which assigned

Remarks:

Book mark:

Rose

(339) Copyist.

13 H. Art'y. | U.S.C.T.

Washington Lockhart

Pvt, Co. D, 13 Reg't U. S. Col'd H. Art'y.

Age ..... years.

Appears on

Company Muster Roll*

for Feb 28, 1865.

Joined for duty and enrolled:

When Nov 1, 1864.

Where Chicago Ill

Period 1 years

Mustered in:

When Nov 14, 1864.

Where Chicago Ill

Present or absent Present

Stoppage, $ 100 for .....

Due Gov't, $ 100 for .....

Valuation of horse, $ 100

Valuation of horse equipments, $ 100

Remarks: Bounty Due $100.00

* First current roll. No muster-in roll of this company on file.

Book mark: .....

Lieut

F 133 11 | U.S.C.T.

William Jourdain

2nd, Co. D, 13 Reg't U. S. Col'd Inf

Appears on

Company Muster Roll

for May & June, 1865.

Present or absent Present

Stoppage, $ 100 for

Due Gov't, $ 100 for

Valuation of horse, $ 100

Valuation of horse equipments, $ 100

Remarks: Has received pro
A. S. Bounty. Due 2nd
Installment Govt
Bounty.

FROM SECOND AUDITOR'S ROLL.

NEXT ROLL ON FILE MUSTER OUT.

Book mark:

Leger

(358) *Copyist.*

I | 13 H. Art'y. | U.S.C.T.

William Jonston

Pvt., Co. D, 13 Reg't U. S. Col'd H. Art'y.

Appears on **Co. Muster-out Roll,** dated Louisville Ky, Nov 18, 1865.

Muster-out to date Nov 18, 1865.

Last paid to June 30, 1865.

Clothing account:

Last settled ....., 186 ; drawn since $ 100

Due soldier $ ..... 100; due U. S. $ 100

Am't for cloth'g in kind or money adv'd $ 25 21/100

Due U. S. for arms, equipments, &c., $ 100

Bounty paid $ 33 1/3 100; due $ 33 1/3 100

Remarks: .....

Book mark: .....

Eager

(361) *Copyist.*

Fouchum, William

....., Co. ....., 13 Reg't Ill Inf

2 Enclosures.

Bed Cards	Final Statements
Burial Records	Furloughs or L. of A.
Certs. of Dis. for Discharge	Med. Certificates
C. M. Charges	Med. Des. Lists
Descriptive Lists	Orders
Discharge Certificates	Pris. of War Record
Enlistment Papers 2	Resignations

Other papers relating to—

Admission to Hosp'l	Furlough or L. of A.
Casualty Sheet	Med. Examination
Confinement	Misc. Information
Contracts	Pay or Clothing
Death or Effects	Personal Reports
Desertion	Rank
Discharge from Hosp'l	Transfer to Hosp'l
Discharge from Service	Transfer to V. R. C.
Duty	Transportation

NOTE 1.—This blank will be used for both enlistments and re-enlistments—enlistment of veterans, &c., &c., in the volunteer service. They will be made out in duplicate in all cases—one to accompany the recruiting return of the superintendent (not the recruiting officer) to the Adjutant General, and one to accompany the accounts of the officer who pays bounty, &c. The Regiment and Company in which the soldier last served should be given on the back.

NOTE 2.—An enlistment holds to service. A muster-in must, in all cases, precede payment of pay, bounty, pension, &c. A muster-in roll must, in all cases, be filed in the Adjutant General's Office as evidence of muster-in. The mustering officer, commissary, or assistant commissary of musters, as the case may be, will countersign both enlistments as having mustered the soldier into the service of the United States before either of them is given to the disbursing officer

DECLARATION OF RECRUIT.

I, [illegible] desiring

VOLUNTEER as a Soldier in the **Army of the United States,** for the term of ~~THREE~~ FIVE YEARS,

Do Declare, That I am [illegible] years and ..... months of age; that I have never been discharged from the United States service on account of disability or by sentence of a court martial, or by order before the expiration of a term of enlistment; and I know of no impediment to my serving honestly and faithfully as a soldier for ~~three~~ five years.

GIVEN at Chicago Ill

the 14 day of Dec 1865

Witness:

[illegible]

[illegible] his Williams X Jonchin mark

No. 209

Volunteered at Chicago Ill

Dec 14 1865

By Capt Shurtleff

Regiment of 2nd Ill Cav

1st Ill Art

enlistment; last served in Company ( )

Reg't of .....

Discharged .....

Dec 13 1865

Camp

Rendezvous

38 Ward Chicago

Ill

CONSENT IN CASE OF MINOR.

I, ..., DO CERTIFY, That I am the ..... of .....; that the said ..... is ..... years of age; and I do hereby freely give my CONSENT to his volunteering as a SOLDIER in the ARMY OF THE UNITED STATES for the period of THREE YEARS.

GIVEN at .....

the ..... day of .....

Witness:

.....

.....

(A. G. O. No. 74 & 76.)

VOLUNTEER ENLISTMENT.

STATE OF Illinois

TOWN OF Chicago

I, [illegible], born in ....., in the State of Illinois, aged Forty Two years, and by occupation a Painter, DO HEREBY ACKNOWLEDGE to have volunteered this Fourteen day of Feb, 1861, to serve as a **Soldier** in the **Army of the United States of America**, for the period of ~~THREE~~ *ONE YEAR*, unless sooner discharged by proper authority: Do also agree to accept such bounty, pay, rations, and clothing, as are, or may be, established by law for volunteers. And I, [illegible], do solemnly swear, that I will bear true faith and allegiance to the ***United States of America***, and that I will serve them honestly and faithfully against all their enemies or opposers whomsoever; and that I will observe and obey the orders of the President of the United States, and the orders of the officers appointed over me, according to the Rules and Articles of War.

Sworn and subscribed to, at Chicago Ills this 1st day of Feb 1, 1865, BEFORE Capt & Mustering 1st Dist Ills

William X Jones his mark

I CERTIFY, ON HONOR, That I have carefully examined the above-named Volunteer, agreeably to the General Regulations of the Army, and that, in my opinion, he is free from all bodily defects and mental infirmity, which would in any way disqualify him from performing the duties of a soldier.

J. Dunn
1st Dist Ills

EXAMINING SURGEON.

I CERTIFY, ON HONOR, That I have minutely inspected the Volunteer [illegible] previously to his enlistment, and that he was entirely sober when enlisted; that, to the best of my judgment and belief, he is of lawful age; and that, in accepting him as duly qualified to perform the duties of an able-bodied soldier, I have strictly observed the Regulations which govern the recruiting service. This soldier has [illegible] *eyes*, Dk *hair*, Dk *complexion*, is 5 *feet* 6 2 *inches* high.

Capt Mustering 1st Dist Ills
~~Regiment of~~ Volunteers,

RECRUITING OFFICER.

(A. G. O. No. 74 & 76.)

Certificate for the Signature of the Mustering Officer, Commissary, or Assistant Commissary of Musters, as the case may be.

Mustered into the service of the United States, for ~~three~~ One years or during the war, from date of enlistment, in Co. [illegible] Regiment of U.S. Sharp Shooters Volunteers, on the 14th day of March, 1865, at Chicago Ills

and credited to [illegible] ~~Ward~~, (or Sub-district,) in the Town of Chicago, in the County of Cook

Bounty paid at time of Muster-in:

U. S. Bounty, ...

Local Bounty, 0 4

Lieut Col
Capt & Mustering 1st Dist Ills
Mustering Officer.

NOTE 1.—This blank will be used for both enlistments and re-enlistments—enlistment of veterans, &c., in the volunteer service. They will be made out in duplicate in all cases—one to accompany the recruiting return of the superintendent (not the recruiting officer) to the Adjutant General, and one to accompany the accounts of the officer who pays bounty, &c. The Regiment and Company in which the soldier last served should be given on the back.

NOTE 2.—An enlistment holds to service. A muster-in must, in all cases, precede payment of pay, bounty, pension, &c. A muster-in roll must, in all cases, be filed in the Adjutant General's Office as evidence of muster-in. The mustering officer, commissary, or assistant commissary of musters, as the case may be, will countersign both enlistments as having mustered the soldier into the service of the United States before either of them is given to the disbursing officer

DECLARATION OF RECRUIT.

I, William Tourchin, desiring

VOLUNTEER as a Soldier in the Army of the United States, for the term of ~~THREE~~ one YEARS,

Do Declare, That I am Twenty three years and ..... months

of age; that I have never been discharged from the United States service on account of disability or by sentence of a court martial, or by order before the expiration of a term of enlistment; and I know of no impediment to my serving honestly and faithfully as a soldier for ~~three~~ one years.

GIVEN at Chicago Ill

the 14 day of March 1865

Witness:

William X Tourchin
mon

No. 209

William Tourchin

Volunteered at Chicago Ill

Mustered in March 14, 1865,

By Capt Mustered

Regiment of Engineers

Discharged 1865 Chicago

Reg't of ....., *last served in Company* ( )

enlistment; last served in Company ( )

Reg't of .....

Discharged .....

Per .....

Regiment .....

Company .....

Station .....

Date .....

CONSENT IN CASE OF MINOR.

I, ..., DO CERTIFY, That I am

the ..... of .....; that the

said ..... is ..... years of age; and I

do hereby freely give my CONSENT to his volunteering as a SOLDIER in the ARMY OF THE UNITED STATES for the period of THREE YEARS.

GIVEN at .....

the ..... day of .....

Witness:

.....

.....

(A. G. O. No. 74 & 76.)

VOLUNTEER ENLISTMENT.

STATE OF Illinois TOWN OF Chicago

I, William Lonchin born in ____, in the State of Alabama, aged Twenty three years, and by occupation a Grocer, Do HEREBY ACKNOWLEDGE to have volunteered this Fourteenth day of March, 1865, to serve as a **Soldier** in the **Army of the United States of America,** for the period of ~~THREE~~ TWO *YEARS*, unless sooner discharged by proper authority: Do also agree to accept such bounty, pay, rations, and clothing, as are, or may be, established by law for volunteers. And I, William Lonchin do solemnly swear, that I will bear true faith and allegiance to the ***United States of America,*** and that I will serve them honestly and faithfully against all their enemies or opposers whomsoever; and that I will observe and obey the orders of the President of the United States, and the orders of the officers appointed over me, according to the Rules and Articles of War.

Sworn and subscribed to, at Chicago Ill't
this 14 day of March, 1865,
BEFORE Wm Spruce
Capt & A.A. Dept 1st Dist Ill't

William his X Lonchin mark

I CERTIFY, ON HONOR, That I have carefully examined the above-named Volunteer, agreeably to the General Regulations of the Army, and that, in my opinion, he is free from all bodily defects and mental infirmity, which would in any way disqualify him from performing the duties of a soldier.

J W Dunn
1st Dist Ill't
EXAMINING SURGEON.

I CERTIFY, ON HONOR, That I have minutely inspected the Volunteer W Lonchin previously to his enlistment, and that he was entirely sober when enlisted; that, to the best of my judgment and belief, he is of lawful age; and that, in accepting him as duly qualified to perform the duties of an able-bodied soldier, I have strictly observed the Regulations which govern the recruiting service. This soldier has Blue *eyes,* Blue *hair,* Blue *complexion,* is 5 *feet* 6 5/8 *inches* high.

Wm Spruce
Capt & A.A. Dept 1st Dist Ill't
Regiment of ____ *Volunteers,*
RECRUITING OFFICER.

(A. G. O. No. 74 & 76.)

Certificate for the Signature of the Mustering Officer, Commissary, or Assistant Commissary of Musters, as the case may be.

Mustered into the service of the United States, for ~~three~~ two years or during the war, from date of enlistment, in Co. 2, 1st Regiment Volunteers, on the 14th day of March, 1865, at Chicago, Ill't.

and credited to 38 Ward, (or Sub-district,) in the Town of Chicago, in the County of Cook, Congressional District, in the State of Illinois.

Bounty paid at time of Muster-in: ____

U. S. Bounty, ____

Local Bounty, 400

Wm Spruce
Capt & A.A. Dept 1st Dist Ill't
Mustering Officer.

2103

Toms Robert

Co a, 13 U.S.Col'd H. Art'y.

Private

CARD NUMBERS.

1	26
2	27
3 See Toms Robert	28
4	29
5	30
6	31
7	32
8	33
9	34
10	35
11	36
12	37
13	38
14	39
15	40
16	41
17	42
18	43
19	44
20	45
21	46
22	47
23	48
24	49
25	50

Book Mark

See also

2104

Fouran William

Co ....., 13 U.S.Col'd H. Art'y.

Private

CARD NUMBERS.

1	26
2	27
3 See Foryann	28 William
4	29
5	30
6	31
7	32
8	33
9	34
10	35
11	36
12	37
13	38
14	39
15	40
16	41
17	42
18	43
19	44
20	45
21	46
22	47
23	48
24	49
25	50

Book Mark:

See also

21.05

Towers. Benjamin

Co F, 13 U.S. Col'd H. Art'y.

Private	Corporal.

CARD NUMBERS.

1	5-5-1 7 3 9 2	26	
2	5-5-1 6 9 5-7	27	
3	5-5-2 3 0 5-2	28	
4	5-5-2 3 2 1 1	29	
5	9 1 2 8 8 0 6	30	
6	4 3 1 5-1 0 0 1	31	
7		32	
8		33	
9		34	
10		35	
11		36	
12		37	
13		38	
14		39	
15		40	
16		41	
17		42	
18		43	
19		44	
20		45	
21		46	
22		47	
23		48	
24		49	
25		50	

Book Mark:

See also

F | 13 H. Art'y. | U.S.C.T.

Benjamin Towers

....., Co. F, 13 Reg't U.S. Col'd H. Art'y.

Appears on

Company Descriptive Book

of the organization named above.

DESCRIPTION.

Age 30 years; height 5 feet 9 inches.

Complexion Blk

Eyes Blk; hair Blk

Where born Georgia

Occupation Farmer

ENLISTMENT.

When Feb 7, 1865.

Where Mt Sterling Ill

By whom Capt Westlake; term 1 y'rs.

Remarks:

(383*g*) Becker

Copyist.

F | 3 Ky Cavly | U.S.C.T

(Colds)

Benjamin Towers.

Appears with rank of Priv on

Muster and Descriptive Roll

of Detachment U.S. Substitutes for enrolled men

Roll dated Mt. Sterling Ills, Feb 9, 1865.

Where born Georgia.

Age 30 years; occupation Farmer

When enlisted Feb 9, 1865.

Where enlisted Mt. Sterling Ills

For what period enlisted 1 years.

Eyes black; hair black

Complexion Yellow; height 5 ft. 9 in.

When mustered in Feb 9, 1865.

Where mustered in Mt. Sterling

Bounty paid $ 100; due $ 100

Clothing account:

Last settled , 186 ; drawn since $ 100

Date of first muster , 186 .

Company to which assigned

Remarks: Credited to Sub. Dist. 100. Mongol, Cass Co. 9. Dist. Ills. Substitute for Aaron Henderson

Book mark :

Rustick

(356m) **Copyist.**

A | 13 Arty | U.S.C.T

Benjamin Conrad

Appears with rank of Private on

Muster and Descriptive Roll of a Detachment of Drafted Men and Substitutes forwarded

for the 13 Reg't U.S. Col'd Arty Roll dated

Camp Butler, Ill, April 23, 1863

Where born Georgia

Age 30 years; occupation Farmer

Drafted and mustered in:

When Feb. 9, 1863.

Where 10th Sterling

Period 1 years.

Eyes Blk; hair Blk

Complexion Yellow; height 5 ft. 9 in.

Paid bounty and advance pay, $ 100

Bounty due $ 100

Where credited Monroe, Con. 1105. D. Ill.

Company to which assigned

Remarks:

Book mark:

W. S. Thompson

(340) Copyist.

1 | 13 Hary | U.S.C.T.

Benjamin Daniels

Appears with rank of Corp on

Muster and Descriptive Roll of a Detachment of U. S. Vols. ~~forwarded~~ 3d

for the 13 Reg't U. S. Col'd ~~Infantry~~ Heavy Roll dated

Camp Nelson Ky June 23 1863.

Where born Louisiana

Age 30 y'rs; occupation Farmer

When enlisted Dec 1, 1863.

Where enlisted Mt. Sterling, Ky

For what period enlisted 1 years.

Eyes Bk; hair Bk

Complexion Bk; height 5 ft. 9 in.

When mustered in Dec 9, 1863.

Where mustered in Mt. Sterling

Bounty paid $ 100; due $ 100

Where credited 9th Dist. Ky.

Company to which assigned D

Remarks:

Book mark:

(340) E. B. Taylor
Copyist.

13 H. Art'y. | U.S.C.T.

Benjamin Powers

Cpl., Co. D, 13 Reg't U. S. Col'd H. Art'y.

Age ..... years.

Appears on

Company Muster Roll*

for ..... June 30 1865.

Joined for duty and enrolled:

When ..... Feb 1, 1865.

Where ..... Mt. Sterling

Period ..... 1 years

NEXT ROLL ON FILE MUSTER OUT.

Mustered in:

When ..... Feb 1, 1865.

Where ..... Mt. Sterling

Present or absent ..... Present

Stoppage, $ ..... 100 for .....

Due Gov't, $ ..... 100 for .....

Valuation of horse, $ 100

Valuation of horse equipments, $ 100

Remarks: Promoted to Cpl

April 25 1865.

* First current roll. No muster-in roll of this company on file.

Book mark: .....

(3586) Copyist.

D | 13 H. Art'y. | U.S.C.T.

Benjamin Downs

H, Co. D, 13 Reg't U. S. Col'd H. Art'y.

Appears on **Co. Muster-out Roll,** dated Louisville Ky, Nov 1, 1865.

Muster-out to date Nov 1 1865.

Last paid to June 30, 1865.

Clothing account:

Last settled ....., 186 ; drawn since $ 100

Due soldier $ 35 48/100; due U. S. $ 100

Am't for cloth'g in kind or money adv'd $ 100

Due U. S. for arms, equipments, &c., $ 100

Bounty paid $ ..... 100; due $ 100

Remarks: .....

Book mark: .....

Louden

(361) *Copyist.*

Powers, Benjamin.

....., Co. F, 13 Reg't U.S.C.T.
N.Y.

3 **Enclosures.**

Bed Cards	Final Statements
Burial Records	Furloughs or L. of A.
Certs. of Dis. for Discharge	Med. Certificates
C. M. Charges	Med. Des. Lists
Descriptive Lists	Orders
Discharge Certificates	Pris. of War Record
Enlistment Papers 3	Resignations

Other papers relating to—

Admission to Hosp'l	Furlough or L. of A.
Casualty Sheet	Med. Examination
Confinement	Misc. Information
Contracts	Pay or Clothing
Death or Effects	Personal Reports
Desertion	Rank
Discharge from Hosp'l	Transfer to Hosp'l
Discharge from Service	Transfer to V. R. C.
Duty	Transportation

DECLARATION OF SUBSTITUTE.

I, Benjamin Towers, desiring to ENLIST in the Army of the United States, for ~~THREE~~ one YEARS, *Do declare,* That I am thirty years and _____ months of age; that I have never been discharged from the United States service on account of disability or by sentence of a court martial; and I know of no impediment to my serving honestly and faithfully as a soldier for ~~three~~ one years.

GIVEN at W^t Sterling Illinois

the 9th day of February 1865—

WITNESS: R. Lawrence

his
Benjamin + Towers
mark

9

No. 376

Benjamin Towers

Enlisted at W^t Sterling Ill.

As Substitute for

Aaron Hoagland

On the 9th day of Feb, 1865,

By

Ethelbert Cobb

Capt

Commanding

Pro Mathias Spohn

Board of Enrollment,

2d Dist. of Illinois.

2

(No. 39.)

SUBSTITUTE

VOLUNTEER ENLISTMENT.

STATE OF Illinois TOWN OF Mt Sterling

I, Benjamin Towers (Colored), born in the State of Georgia, aged thirty years, and by occupation a brickmason, DO HEREBY ACKNOWLEDGE to have agreed with Aaron Henderson, Esq., of Monroe Precinct Co. Illinois to become his **SUBSTITUTE** in the Military Service, for a sufficient consideration paid and delivered to me, on the ninth day of February, 1865; and having thus agreed with said Aaron Henderson, I DO HEREBY ACKNOWLEDGE to have enlisted this ninth day of February, 1865, to serve as a ***Soldier*** in the **Army of the United States of America,** for the period of ~~three~~ one *YEARS*, unless sooner discharged by proper authority. I do also agree to accept such bounty, pay, rations, and clothing as are, or may be, established by law for soldiers. And I do solemnly swear that I will bear true and faithful allegiance to the ***United States of America;*** that I will serve them honestly and faithfully against all their enemies or opposers whomsoever; and that I will observe and obey the orders of the President of the United States and the orders of the officers appointed over me, according to the Rules and Articles of War.

SWORN and subscribed to, at Mt Sterling
this 9th of February, 1865,
BEFORE B F Wollstaff Capt
Pro Mar 9th Dist Ills

his
Benjamin × Towers
mark

We certify, on honor, That we have carefully examined the above-named Volunteer Substitute agreeably to the Regulations, and that, in our opinion, he is free from all bodily defects and mental infirmity which would in any way disqualify him from performing the duties of a soldier; that he was entirely sober when enlisted; that he is of lawful age, (not under 18 years;) and that, in accepting him as duly qualified to perform the duties of an able-bodied soldier, and as a Substitute in lieu of Aaron Henderson liable to, drafted in Monroe Precinct Co. Ills Illinois, 186, we have strictly observed the Regulations which govern in such cases. This soldier has black eyes, black hair, yellow complexion; is 5 feet 9 inches high.

B F Wollstaff
Provost Marshal.

L. L. Sturtevant
Commissioner of Board.

R M Worthington
Surgeon of Board.

Board of Enrollment of 9th *Dist. of* Illinois

Mustered into the service of the United States for one year by Lieut. B F Wollstaff Pro Mar 9th Dist Ills on the 9th day of February 1865

DECLARATION OF SUBSTITUTE.

I, Benjamin Towers, desiring to ENLIST in the **Army of the United States,** for ~~three~~ one YEAR~~S~~, ***Do declare,*** That I am thirty years and _____ months of age; that I have never been discharged from the United States service on account of disability or by sentence of a court martial; and I know of no impediment to my serving honestly and faithfully as a soldier for ~~three~~ one year~~s~~.

GIVEN at W. Sterling Illinois

the 9th day of February 1865

WITNESS:

P. Lawrence

his
Benjamin ✗ Towers
mark

I A

No. 376

Benjamin Towers

Enlisted at Mt. Sterling

As Substitute for

Aaron Enoch

On the 9th day of February, 1865;

By

Patrick Clark Capt.

60 Illinois Infantry

P.R. Montgomery

Board of Enrollment,

9th Dist. of Illinois.

(No. 39.)

SUBSTITUTE

VOLUNTEER ENLISTMENT.

STATE OF Illinois TOWN OF Mt Sterling

I, Benjamin Towers colored, born in the State of Georgia, aged thirty years, and by occupation a brickmason, DO HEREBY ACKNOWLEDGE to have agreed with Aaron Henderson, Esq., of Monroe Precinct Cass County Illinois

to become his **SUBSTITUTE** in the Military Service, for a sufficient consideration paid and delivered to me, on the ninth day of February, 1865; and having thus agreed with said Aaron Henderson, I DO HEREBY ACKNOWLEDGE to have enlisted this ninth day of February, 1865, to serve as a ***Soldier*** in the **Army of the United States of America,** for the period of ~~THREE~~ *one YEARS*, unless sooner discharged by proper authority. I do also agree to accept such bounty, pay, rations, and clothing as are, or may be, established by law for soldiers. And I do solemnly swear that I will bear true and faithful allegiance to the ***United States of America;*** that I will serve them honestly and faithfully against all their enemies or opposers whomsoever; and that I will observe and obey the orders of the President of the United States and the orders of the officers appointed over me, according to the Rules and Articles of War.

SWORN and subscribed to, at Mt Sterling Ills
this 9th of February, 1865,
BEFORE B. F. Westlake Capt
& Pro Mar 9th Dist Ills

his
Benjamin + Towers
mark

We certify, on honor, That we have carefully examined the above-named Volunteer Substitute agreeably to the Regulations, and that, in our opinion, he is free from all bodily defects and mental infirmity which would in any way disqualify him from performing the duties of a soldier; that he was entirely sober when enlisted; that he is of lawful age, (not under 18 years;) and that, in accepting him as duly qualified to perform the duties of an able-bodied soldier, and as a Substitute in lieu of Aaron Henderson liable to, drafted in Monroe Precinct Cass County Illinois, 186, we have strictly observed the Regulations which govern in such cases. This soldier has black eyes, black hair, yellow complexion; is 5 feet 9 inches high.

B. F. Westlake
Provost Marshal.

O. C. Sturtevant
Commissioner of Board.

R. M. Worthington
Surgeon of Board.

Board of Enrollment of 9th *Dist. of* Illinois

Mustered into the service of the U. S. this 9th day of February 1865
B. F. Westlake
Capt. & Pro Mar 9th Dist Ills
& Mustering Officer

DECLARATION OF SUBSTITUTE.

I, Benjamin Towers, desiring to ENLIST in the **Army of the United States,** for ~~THREE~~ one YEARS, ***Do declare,*** That I am thirty years and _____ months of age; that I have never been discharged from the United States service on account of disability or by sentence of a court martial; and I know of no impediment to my serving honestly and faithfully as a soldier for ~~three~~ one years.

GIVEN at Mt. Sterling Ills
the 9th day of February

WITNESS:
R. Lawrence

his
Benjamin X Towers
mark

No. 736

Benjamin Towers, Colored,

Enlisted at Mt. Sterling, Ills

As Substitute for

Aaron Hendrickson

On the 9th *day of* February, 1865,

By

Peter Nesbitt, Capt.

to be Mustered

Oct. Mt. Sterling

Board of Enrollment,
9th
Dist. of Illinois

(No. 39.)

SUBSTITUTE

VOLUNTEER ENLISTMENT.

STATE OF Illinois TOWN OF Wm Sterling

I, Benjamin Towers (Colored), born in the State of Georgia, aged thirty years, and by occupation a brickmason, DO HEREBY ACKNOWLEDGE to have agreed with Aaron Henderson, Esq., of Monroe Precinct Cass County State of Illinois

to become his **SUBSTITUTE** in the Military Service, for a sufficient consideration paid and delivered to me, on the ninth day of February, 1865; and having thus agreed with said Aaron Henderson, I DO HEREBY ACKNOWLEDGE to have enlisted this ninth day of February, 1865, to serve as a ***Soldier*** in the **Army of the United States of America,** for the period of ~~THREE~~ *ONE YEAR*, unless sooner discharged by proper authority. I do also agree to accept such bounty, pay, rations, and clothing as are, or may be, established by law for soldiers. And I do solemnly swear that I will bear true and faithful allegiance to the ***United States of America;*** that I will serve them honestly and faithfully against all their enemies or opposers whomsoever; and that I will observe and obey the orders of the President of the United States and the orders of the officers appointed over me, according to the Rules and Articles of War.

SWORN and subscribed to, at Wm Sterling Ills
this 9th of February, 1865,
BEFORE B F Westlake Capt
& Pro Mar 9th Dist Ills.

his
Benjamin + Towers
mark

We certify, on honor, That we have carefully examined the above-named Volunteer Substitute agreeably to the Regulations, and that, in our opinion, he is free from all bodily defects and mental infirmity which would in any way disqualify him from performing the duties of a soldier; that he was entirely sober when enlisted; that he is of lawful age, (not under 18 years;) and that, in accepting him as duly qualified to perform the duties of an able-bodied soldier, and as a Substitute in lieu of Aaron Henderson liable to, drafted in Monroe Precinct Cass Co Illinois, 186, we have strictly observed the Regulations which govern in such cases. This soldier has black eyes, black hair, yellow complexion; is 5 feet 9 inches high.

B F Westlake
Provost Marshal.

Wm. Sturtevant
Commissioner of Board.

R M Northington
Surgeon of Board.

Board of Enrollment of 9th *Dist. of* Illinois

Received the within Substitute and Volunteer Enlistment on the 9th day of February 1865 as the Substitute of Aaron Henderson Esq of Monroe Precinct Cass Co Ills

B F Westlake
Capt & Pro Mar 9th Dist Ills
& Disbursing Officer

2106

Fowles, Simon

Co C, 13 U.S.Col'd H. Art'y.

Private | Private

CARD NUMBERS.

1	5-5-15-875	26	
2	5-5-16901	27	
3	5-5-21538	28	
4	5-5-21719	29	
5	5-5-21888	30	
6	5-5-22037	31	
7	9-12847-5	32	
8		33	
9		34	
10		35	
11		36	
12		37	
13		38	
14		39	
15		40	
16		41	
17		42	
18		43	
19		44	
20		45	
21		46	
22		47	
23		48	
24		49	
25		50	

Book Mark:

See also

I | 13 H. Art'y. | U.S.C.T.

Jim Fowler

....., Co. C, 13 Reg't U. S. Col'd H. Art'y.

Appears on

Company Descriptive Book

of the organization named above.

DESCRIPTION.

Age 24 years; height 5 feet 7½ inches.

Complexion black

Eyes black; hair black

Where born Newton Ky

Occupation Laborer

ENLISTMENT.

When Feb 4, 1864.

Where Paducah Ky

By whom Capt Morgan; term 3 y'rs.

Remarks:

Deserted

(383*g*) *Copyist.*

F | **13** H. Art'y. | **U.S.C.T.**

Simon Fowles

Appears with rank of Pvt on

Muster and Descriptive Roll of a Detachment of U. S. Vols. forwarded

for the 13 Reg't U. S. Col'd H. Art'y. Roll dated

Paducah Ky., Feb. 27, 1865.

Where born Kentucky

Age 34 y'rs; occupation Laborer

When enlisted Feb. 4, 1865.

Where enlisted Paducah, Ky

For what period enlisted 3 years.

Eyes Black; hair Black

Complexion Black; height 5 ft. 7 1/2 in.

When mustered in Feb. 4, 1865.

Where mustered in Paducah, Ky

Bounty paid $ 100; due $ 100

Where credited * 1st Dist of Ky

Company to which assigned b

Remarks:

* Torn on Roll

Book mark:

Hammer

(339) *Copyist.*

I | **13** H. Art'y. | **U.S.C.T.**

Simm Fowler

A, Co. C, 13 Reg't U. S. Col'd H. Art'y.

Age ..... years.

Appears on

Company Muster Roll*

for to Apr 30, 1865.

Joined for duty and enrolled:

When Feb 4, 1865.

Where Paducah Ky

Period 3 years

Mustered in:

When Feb 4, 1865.

Where Paducah Ky

Present or absent Present,

Stoppage, $ 100 for .....

Due Gov't, $ 100 for .....

Valuation of horse, $ 100

Valuation of horse equipments, $ 100

Remarks: .....

* First current roll. No muster-in roll of this company on file.

Book mark: .....

Saunders

(3586) Copyist.

13 H. Art'y. | U.S.C.T.

Simon Bowles

Appears with rank of Pvt on

Muster and Descriptive Roll of a Detachment of U. S. Vols. ~~forwarded~~ organized

for the 13 Reg't U. S. Col'd H. Art'y. Roll dated

Camp Nelson, Ky, June 23, 1863.

Where born Kentucky Ky

Age 31 y'rs; occupation Laborer

When enlisted Feb. 4, 1863.

Where enlisted Paducah, Ky.

For what period enlisted 3 years.

Eyes Black; hair Black

Complexion Black; height 5 ft. 7½ in.

When mustered in Feb. 4, 1863.

Where mustered in Paducah Ky

Bounty paid $ None 00; due $ 100

Where credited 1st Cong. Dist. Ky

Company to which assigned L

Remarks:

Book mark:

D B Taylor

(339) Copyist.

I | 13 H. Art'y. | U.S.C.T.

Simon Tooles

Pt, Co. C, 13 Reg't U. S. Col'd H. Art'y.

Appears on

Company Muster Roll

for May & June, 1865.

Present or absent Present

Stoppage, $ 100 for

Due Gov't, $ 100 for

Valuation of horse, $ 100

Valuation of horse equipments. $ 100

Remarks: No bounty rec'd Due first enlistment of bounty.

FROM SECOND AUDITOR'S ROLL.

Book mark:

Tan Hamlin

(358) *Copyist.*

I | 13 H. Art'y. | U.S.C.T.

Simon Gillis

Pf, Co. C, 13 Reg't U. S. Col'd H. Art'y.

Appears on

Company Muster Roll

for July & Aug, 186 5.

Present or absent Present

Stoppage, $ 100 for

Due Gov't, $ 100 for

Valuation of horse, $ 100

Valuation of horse equipments. $ 100

Remarks: Was first enlist-
ment Annuity $ 100.00

NEXT ROLL ON FILE MUSTER OUT.

Book mark:

Tom Hopkins

(358) Copyist.

S | **13** H. Art'y. | **U.S.C.T.**

Simon Soules

Pt., Co. B, 13 Reg't U. S. Col'd H. Art'y.

Appears on **Co. Muster-out Roll,** dated Louisville Ky, Nov 18, 1865.

Muster-out to date ....., 186 .

Last paid to June 30, 1865.

Clothing account:

Last settled....., 186 ; drawn since $.....100

Due soldier $.....100; due U. S. $ 20 69/100

Am't for cloth'g in kind or money adv'd $.....100

Due U. S. for arms, equipments, &c., $.....100

Bounty paid $ 100 00/100; due $.....100

Remarks: Absent in arrest at Lexington Ky. Not mustered out with organization. No discharge furnished.

Book mark: .....

Simon Soules.

(361) *Copyist.*

Fowler, Simon

_____, Co. _____, 13 Reg't U S C-A

1 **Enclosures.**

Bed Cards	Final Statements
Burial Records	Furloughs or L. of A.
Certs. of Dis. for Discharge	Med. Certificates
C. M. Charges	Med. Des. Lists
Descriptive Lists	Orders
Discharge Certificates	Pris. of War Record
Enlistment Papers 1	Resignations

Other papers relating to—

Admission to Hosp'l	Furlough or L. of A.
Casualty Sheet	Med. Examination
Confinement	Misc. Information
Contracts	Pay or Clothing
Death or Effects	Personal Reports
Desertion	Rank
Discharge from Hosp'l	Transfer to Hosp'l
Discharge from Service	Transfer to V. R. C.
Duty	Transportation

DECLARATION OF RECRUIT.

I, Simon Fowles of Liming Hox Co Tenn desiring to volunteer as a soldier in the ARMY OF THE UNITED STATES, for the term of *Three Years*, DO DECLARE That I am 31 years and 0 months of age; that I have never been discharged from the United States service on account of disability or by sentence of a court-martial, or by order before the expiration of a term of enlistment; and I know of no impediment to my serving honestly and faithfully as a soldier for three years.

GIVEN at Paducah Ky

the 7th day of Feby 1865

Witness:
E R Bracken

his
Simon X Fowles
mark

Volunteered at Paducah Ky
this 7th day of Feby 1865
By E R Bracken
Capt 3d Regt U S C Cav

No. Nineteen

Co. B 13th U.S.C.H.A.

Note 1.—This blank will be used for enlistments of United States colored troops. They will be made out in duplicate in all cases—one to accompany the recruiting return of the superintendent (not the recruiting officer) to the Adjutant General, and one to accompany the accounts of the officer who pays bounty, &c.

Note 2.—An enlistment holds to service. A muster-in must, in all cases, precede payment of pay, bounty, pension, &c. A muster-in roll, must in the Adjutant General's Office as evidence of muster-in. The mustering officer, commissary, or assistant commissary of musters, as the case may be, will countersign both enlistments as having mustered the soldiers into the service of the United States before either of them is given to the disbursing officer.

Consent of Parent or Guardian in case of a Minor, if a Free Man, or in the case of a Slave, of the Person to whom he owes Service:

I, ... DO CERTIFY, That I am

the .....

.....

that the said ..... is ..... years of age; and I do freely give my CONSENT to his volunteering as a SOLDIER in the Army of the United States, for the period of THREE YEARS, under the conditions of the laws of the United States.

GIVEN at .....

the ..... day of .....

Witness:

.....

.....

(A. G. O. No. 74 & 76.)

UNITED STATES COLORED TROOPS ENLISTMENT.

STATE OF Kentucky

TOWN OF Accredited to Livingston

I, Simon Fowles born in .....

in the State of Tennessee aged Thirty four years

and by occupation a Laborer Do HEREBY ACKNOWLEDGE to

have volunteered Seventh day of July 1863

to serve as a **Soldier** in the **Army of the United States of America,** for the period of THREE YEARS, unless sooner discharged by proper authority: Do also agree to accept such bounty, pay, rations, and clothing, as are, or may be, established by law for the U. S. colored troops.

And I, Simon Fowles of Livingston Co Ky do solemnly swear that I will bear true faith and allegiance to the **United States of America,** and that I will serve them honestly and faithfully against all their enemies or opposers whomsoever; and that I will observe and obey the orders of the President of the United States, and the orders of the officers appointed over me, according to the Rules and Articles of War.

Sworn and subscribed to, at Smithland Ky

this 4th day of July 1863

Before Jno H Morgan Capt & Asst Adjt Gen Vols

his
Simon X Fowles
Mark

I CERTIFY, ON HONOR, That I have carefully examined the above named Volunteer agreeably to the General Regulations of the Army, and that, in my opinion, he is free from all bodily defects and mental infirmity, which would in any way disqualify him from performing the duties of a soldier.

J M Beck

EXAMINING SURGEON.

I CERTIFY, ON HONOR, That I have minutely inspected the Volunteer Simon Fowles previously to his enlistment, and that he was entirely sober when enlisted; that, to the best of my judgment and belief, he is of lawful age; and that, in accepting him as duly qualified to perform the duties of an able-bodied soldier, I have strictly observed the regulations which govern the recruiting service. This soldier has Blk *eyes*, Blk *hair*, Blk *complexion*, is 5 *feet* 6½ *inches* high.

.....

RECRUITING OFFICER OR AGENT.

Mustered into the United States Service 7th day of July 1863.

Jno H Morgan
Capt & Asst Adjt Gen Vols *Mustering Officer.*

Mustered into the service of the United States, for three years or during the war, from date of enlistment, in Company ..... Regiment of Kentucky Volunteers, on the 7th day of July, 1863, at Smithland Ky

By J H Morgan Capt & Asst Adjt Gen Vols

Recruiting Officer.

2107

Towns. James

Co. F, 13 U.S.Col'd H. Art'y.

Private	Private

CARD NUMBERS.

1	5-5-17047	26	
2	5-5-23138	27	
3	5-5-23310	28	
4	912891O	29	
5		30	
6		31	
7		32	
8		33	
9		34	
10		35	
11		36	
12		37	
13		38	
14		39	
15		40	
16		41	
17		42	
18		43	
19		44	
20		45	
21		46	
22		47	
23		48	
24		49	
25		50	

Book Mark:

See also

S. 719951 P.G 40
8,378 x 33 P.O m. m.
A/39/412 Poles
RKP764683
S 2 3 9 2 G 2 0 P.O 44
0.2423770 P.O. N
M.A.97706K
A-307604 C W.O.
MS 1213907

J. Emmerich Dies

9 | 13 H. Art'y. | U.S.C.T.

James Towns

, Co. F, 13 Reg't U. S. Col'd H. Art'y.

Appears on

Company Descriptive Book

of the organization named above.

DESCRIPTION.

Age 21 years; height 5 feet 5 inches.

Complexion Blk

Eyes Blk; hair Blk

Where born

Occupation Laborer

ENLISTMENT.

When Mar 1, 1863.

Where Camp Del

By whom Capt Philips; term 1 y'rs.

Remarks:

Beck

S 13th Ky. Cav. U.S.V.

James L. Dennis

Appears with rank of Pvt on

Muster and Descriptive Roll of a Detachment of U. S. Vols. ~~forwarded~~ Organized

for the 13 Reg't U.S. Col'd Cav'y. Roll dated

Camp Nelson, Ky., June 23, 1865.

Where born .....

Age ..... y'rs; occupation .....

When enlisted ....., 186 .

Where enlisted .....

For what period enlisted ..... years.

Eyes ..... ; hair .....

Complexion ..... ; height ... ft. ... in.

When mustered in ....., 186 .

Where mustered in .....

Bounty paid $ 100 ; due $ 100

Where credited .....

Company to which assigned E

Remarks: Dick at Smithland, Kentucky,

.....

Book mark: .....

E. D. Clay Col

(339) *Copyist.*

1 | 13 H. Art'y. | U.S.C.T.

James Downs

Pt., Co. D, 13 Reg't U. S. Col'd H. Art'y.

Age ..... years.

Appears on

Company Muster Roll*

for ..... June 30, 1865.

Joined for duty and enrolled:

When ..... March 4, 1863.

Where ..... Cairo Ill.

Period ..... 1 years

Mustered in:

When ..... March 4, 1863.

Where ..... Cairo Ill.

Present or absent ..... Present

Stoppage, $ ..... 100 for .....

Due Gov't, $ ..... 100 for .....

Valuation of horse, $ 100

Valuation of horse equipments, $ 100

Remarks: .....

NEXT ROLL ON FILE MUSTER OUT.

* First current roll. No muster-in roll of this company on file.

Book mark: .....

Linden

(3586) Copyist.

D | 13 H. Art'y. | U.S.C.T.

James Stevens

Pvt, Co. D, 13 Reg't U. S. Col'd H. Art'y.

Appears on **Co. Muster-out Roll,** dated Louisville Ky Nov 1 1865.

Muster-out to date Nov 1 1865.

Last paid to June 30 1865.

Clothing account:

Last settled ....., 186 ; drawn since $ 100

Due soldier $ 3 00/100; due U. S. $ 100

Am't for cloth'g in kind or money adv'd $ 100

Due U. S. for arms, equipments, &c., $ 100

Bounty paid $ ..... 100; due $ 100

Remarks: Issued 1 pr Drs for one Screw Driver & Cone Wrench 1 Wiper 1 Cone 32 cts Due from the U.S. $10.00 as per Check Book age 21 yrs

Book mark: .....

(361) Saunders
Copyist.

Co E, 13 U.S.Col'd H. Art'y.

Private	Private

CARD NUMBERS.

1	5.5.18369	26	
2	5.5.17946	27	
3	5.5.23510	28	
4	5.5.23657	29	
5	5.5.23799	30	
6	9.12.90855	31	
7		32	
8		33	
9		34	
10		35	
11		36	
12		37	
13		38	
14		39	
15		40	
16		41	
17		42	
18		43	
19		44	
20		45	
21		46	
22		47	
23		48	
24		49	
25		50	

Book Mark:

See also Los A. 121 [illegible]

MICRO 1120

S1198266 00.mon

J. H. Emmons Co

F | 13 H. Art'y. | U.S.C.T.

Enos Travis

....., Co. F, 13 Reg't U.S. Col'd H. Art'y.

Appears on

Company Descriptive Book

of the organization named above.

DESCRIPTION.

Age 25 years; height 5 feet 4 inches.

Complexion Dark

Eyes Blk; hair Blk

Where born Mason Co. Ky.

Occupation Farmer

ENLISTMENT.

When Oct 8, 1864.

Where Mustered Oct 8'64 Greensburg Ky

By whom Capt McGee; term 3 y'rs.

Remarks:

J Beck

(383*a*) *Copyist.*

T | 13 H. Art'y. U.S.C.T.

Enos Travis

Pvt., Co. G, 13 Reg't U. S. Col'd H. Art'y.

Appears on

M. and D. Roll of Men Transferred

to the organization named above,

from Co. A, 121 U.S. Col'd Infy

Roll dated Camp Nelson, Ky. June 23, 1865.

When enlisted Oct 8, 1864.

Period for which enlisted 3 years.

When mustered in Oct 8, 1864.

Present or absent Not stated

Company to which assigned

Remarks:

Book mark:

Redeter

(342) *Copyist.*

9 | 13 H. Art'y. | U.S.C.T.

Enos Travis

Pvt., Co. ....., 13 Reg't U. S. Col'd H. Art'y.

Appears on

M. and D. Roll of Men Transferred

to the organization named above,

from Co....., 121 Reg't U. S. Colored Infantry.

Roll dated June 23, 1865.

When enlisted Oct. 8, 1864.

Period for which enlisted 3 years.

When mustered in Oct. 8, 1864.

Present or absent Not stated

Company to which assigned G

Remarks: Credited to Mason Co. 9 S. Ky.

Book mark.:

C Williams
Copyist.

N | 13 H. Art'y. | U.S.C.T.

Enos Davis

Pvt., Co. ____, 13 Reg't U. S. Col'd H. Art'y.

Age ____ years.

Appears on

Company Muster Roll*

for from June 23 to 30, 1865.

Joined for duty and enrolled:

When Oct 8, 1864

Where Greensboro, Ky.

Period 3 years

Mustered in:

When Oct. 8, 1864

Where Greensboro, Ky

Present or absent Absent

Stoppage, $62/100 for C. & Q. &.

Due Gov't, $100 for

Valuation of horse, $100

Valuation of horse equipments, $100

Remarks: Sick at Maysville, Ky,

* First current roll. No muster-in roll of this company on file.

Book mark:

(3586)

W. Anderson
Copyist.

P | 13 H. Art'y. | U.S.C.T.

Enos Travis

Pvt., Co. G, 13 Reg't U. S. Col'd H. Art'y.

Appears on

Company Muster Roll

for July & Aug., 1865.

Present or absent Absent

Stoppage, $ 62/100 for C. & G. E.

Due Gov't, $ 100 for

Valuation of horse, $ 100

Valuation of horse equipments, $ 100

Remarks: On duty at Post Q. M. Maysville, Ky.

NEXT ROLL ON FILE MUSTER OUT.

Book mark:

T. Anderson

(358) *Copyist.*

J | 13 H. Art'y. | U.S.C.T.

Enos Travis

Priv., Co. G, 13 Reg't U. S. Col'd H. Art'y.

Appears on **Co. Muster-out Roll,** dated Louisville, Ky, Nov 18, 1865.

Muster-out to date Nov 18, 1865.

Last paid to June 30, 1865.

Clothing account:

Last settled ....., 186 ; drawn since $ 100

Due soldier $ 18 30/100; due U. S. $ 100

Am't for cloth'g in kind or money adv'd $ 100

Due U. S. for arms, equipments, &c., $ 100

Bounty paid $ 100 ~/100; due $ 100

Remarks: .....

Book mark: .....

A W Allen

(361) *Copyist.*

2109

Travis, Perry

Co G, 13 U.S.Col'd H. Art'y.

Enlisted	Enlisted

CARD NUMBERS.

1	5-5-18370	26	
2	5-5-17947	27	
3	5-5-2351-11	28	
4	5-5-23651-8	29	
5	5-5-23850	30	
6	9 12 9 0 8 6	31	
I		32	
6		33	
9		34	
10		35	
11		36	
12		37	
13		38	
14		39	
15		40	
16		41	
17		42	
18		43	
19		44	
20		45	
21		46	
22		47	
23		48	
24		49	
25		50	

Book Mark:

See also Co A. 121. USCHA

D. 1679477 Pl. 1st cm.

D. J. Innerarity Esq.

J | 13 H. Art'y. | U.S.C.T.

Perry Travers

....., Co. J, 13 Reg't U. S. Col'd H. Art'y.

Appears on

Company Descriptive Book

of the organization named above.

DESCRIPTION.

Age 18 years; height 5 feet 3½ inches.

Complexion Dark

Eyes Blk; hair Blk

Where born Mason Co Ky

Occupation Farmer

ENLISTMENT.

When Oct 8, 1864.
Mustered Oct 8 64

Where Greenupsburg, Ky.

By whom Capt W C Grier; term 3 y'rs.

Remarks:

Beck

(383*a*) **Copyist.**

T | 13 H. Art'y. | U.S.C.T.

Perry Travis

Art, Co. G, 13 Reg't U. S. Col'd H. Art'y.

Appears on

M. and D. Roll of Men Transferred

to the organization named above,

from Co. A, 121 U.S.C.T. Sept'y

Roll dated Camp Nelson, Ky. June 23, 1865.

When enlisted Oct 8, 1864.

Period for which enlisted 3 years.

When mustered in Oct 8, 1864.

Present or absent Not stated

Company to which assigned

Remarks:

Book mark: Rochester

(342) *Copyist.*

G | 13 H. Art'y. | U.S.C.T.

Perry Travis

Pvt., Co. ....., 13 Reg't U. S. Col'd H. Art'y.

Appears on

M. and D. Roll of Men Transferred

to the organization named above,

from Co....., 121 Reg't U. S. Colored Infantry.

Roll dated June 23, 1865.

When enlisted Oct. 8, 1864

Period for which enlisted 3 years.

When mustered in Oct. 8, 1864.

Present or absent Not stated

Company to which assigned G

Remarks: Credited to Mason Co. 9 D. Ky.

Book mark :

L. Williams

D	13 H. Art'y.	U.S.C.T.

Perry Travis

Pvt., Co. G, 13 Reg't U. S. Col'd H. Art'y.

Age ..... years.

Appears on

Company Muster Roll*

for from June 23 to 30, 1865.

Joined for duty and enrolled:

When Oct. 8, 1864.

Where Greeneville, Ky.

Period 3 years

Mustered in:

When Oct. 8, 1864

Where Greeneville, Ky

Present or absent Present

Stoppage, $ 100 for .....

Due Gov't, $ 100 for .....

Valuation of horse, $ 100

Valuation of horse equipments, $ 100

Remarks: .....

* First current roll. No muster-in roll of this company on file.

Book mark: .....

(358*b*) W. Anderson
Copyist.

P	13 H. Art'y.	U.S.C.T.

Perry Travis

Pvt., Co. G, 13 Reg't U. S. Col'd H. Art'y.

Appears on

Company Muster Roll

for July & Aug., 1865.

Present or absent Present

Stoppage, $ 100 for

Due Gov't, $ 100 for

Valuation of horse, $ 100

Valuation of horse equipments, $ 100

Remarks:

NEXT ROLL ON FILE MUSTER OUT.

Book mark:

T. Anderson

(358) *Copyist.*

J | 13 H. Art'y. | U.S.C.T.

Perry & Travis

Priv., Co. G, 13 Reg't U. S. Col'd H. Art'y.

Appears on **Co. Muster-out Roll,** dated Louisville, Ky., Nov 18, 1865.

Muster-out to date Nov 18, 1865.

Last paid to June 30, 1865.

Clothing account:

Last settled ....., 186 ; drawn since $ 100

Due soldier $ 1 62/100; due U. S. $ 100

Am't for cloth'g in kind or money adv'd $ 100

Due U. S. for arms, equipments, &c., $ 100

Bounty paid $ 100 00/100; due $ 100

Remarks: .....

Book mark: 278/1878

A W Allen

(361) *Copyist.*

2110

Price. Henry

Co a, 13 U.S.Col'd H. Art'y.

Private

CARD NUMBERS.

1	26
2	27
3 See Price Henry	
4	29
5	30
6	31
7	32
8	33
9	34
10	35
11	36
12	37
13	38
14	39
15	40
16	41
17	42
18	43
19	44
20	45
21	46
22	47
23	48
24	49
25	50

Book Mark:

See also

2711

Frumbo James

Co G, 13 U.S. Col'd H. Art'y.

Corporal.	Corporal.

CARD NUMBERS.

1	5.5.1825-0	26	
2	5.5.1795-2	27	
3	5.5.2339 2	28	
4	5.5.2354 3	29	
5	5.5.2369 0	30	
6	9 1 2 9 0 8 7	31	
7		32	
8		33	
9		34	
10		35	
11		36	
12		37	
13		38	
14		39	
15		40	
16		41	
17		42	
18		43	
19		44	
20		45	
21		46	
22		47	
23		48	
24		49	
25		50	

Book Mark:

See also Geo 6. 121. 2 USC Inf

S 1210967-P.O. 0011

S 1213210-P.O. 0011

S 1282619-P.O. 0011

S. 1285346 (P.O. 0011

S. 1392940. P.O. 2411 (P.O.

S. D. 14/8668

J. F. Knauert Co.

F | **13 H. Art'y.** | **U.S.C.T.**

James Freeman

....., Co. I, 13 Reg't U. S. Col'd H. Art'y.

Appears on

Company Descriptive Book

of the organization named above.

DESCRIPTION.

Age 22 years; height 6 feet 2 inches.

Complexion Yellow

Eyes Blk; hair Blk

Where born Bath Co. Ky.

Occupation Laborer

ENLISTMENT.

When Jan 2, 1865.

* Mustered Jan. 9'65

Where Maysville Ky

* Greenupsb'g Ky.

By whom Capt C H Smith; term 3 y'rs.

* Capt W C Grier

Remarks:

Appointed Corpl to date

from Jan 20 '65

Beech

(383*g*) **Copyist.**

J | **13 H. Art'y.** | **U.S.C.T.**

James Trumbo

Capt., Co. G, 13 Reg't U. S. Col'd H. Art'y.

Appears on

M. and D. Roll of Men Transferred

to the organization named above,

from Co. C, 121 U.S. Col'd Infty.

Roll dated Camp Nelson, Ky. June 23, 1865.

When enlisted Jan 2, 1865.

Period for which enlisted 3 years.

When mustered in Jan 9, 1865.

Present or absent Not stated

Company to which assigned

Remarks: Promoted Capt. Jan. 20, 1865

Book mark :

(342) Copyist.

G | 13 H. Art'y. | U.S.C.T.

James Saunders

Pvt., Co. ....., 13 Reg't U. S. Col'd H. Art'y.

Appears on

M. and D. Roll of Men Transferred

to the organization named above,

from Co....., 121 Reg't U. S. Colored Infantry.

Roll dated August 23, 1865

When enlisted January 2, 1865.

Period for which enlisted 3 years.

When mustered in January 9, 1865.

Present or absent Not stated

Company to which assigned G

Remarks: Credited to Balls

Co. 9 Ky.

Book mark :

C. Williams,

(342) *Copyist.*

J | 13 H. Art'y. | U.S.C.T.

James Trumbo

Corpl, Co. G, 13 Reg't U. S. Col'd H. Art'y.

Age ..... years.

Appears on

Company Muster Roll*

for from June 23 to 30, 1865.

Joined for duty and enrolled:

When Jan. 2, 1865.

Where Maysville, Ky.

Period 3 years

Mustered in:

When Jan. 6, 1865.

Where Paducah, Ky.

Present or absent Present

Stoppage, $ 100 for .....

Due Gov't, $ 100 for .....

Valuation of horse, $ 100

Valuation of horse equipments, $ 100

Remarks: .....

* First current roll. **No muster-in roll of this company on file.**

Book mark: .....

W. Anderson
Copyist.

(3586)

P | 13 H. Art'y. | U.S.C.T.

James Toumbo

Corp., Co. G, 13 Reg't U. S. Col'd H. Art'y.

Appears on

Company Muster Roll

for July & Aug, 1865.

Present or absent Present

Stoppage, $ 100 for

Due Gov't, $ 100 for

Valuation of horse, $ 100

Valuation of horse equipments, $ 100

Remarks:

NEXT ROLL ON FILE MUSTER OUT.

Book mark:

W. Anderson

(358) *Copyist.*

I | 13 H. Art'y. | U.S.C.T.

James Trumbo

Capl, Co. G, 13 Reg't U. S. Col'd H. Art'y.

Appears on **Co. Muster-out Roll,** dated Louisville, Ky, Nov 18, 186 5.

Muster-out to date Nov 18, 186 5.

Last paid to June 30, 186 5.

Clothing account:

Last settled ....., 186 ; drawn since $ 100

Due soldier $ 3 31/100; due U. S. $ 100

Am't for cloth'g in kind or money adv'd $ 100

Due U. S. for arms, equipments, &c., $ 100

Bounty paid $ 100 00/100; due $ 100

Remarks: Appt Corpl Jan 9, 1865.
Due US for ord lost Dompsion. 08.
He has the diffence of a private's pay
and noncommissioned offcis due
him from the 28 of Feb 1865 (date
when last paid as the 121 US Cd)

Book mark: Lorenz

A W Allen

(361) *Copyist.*

JAN. 16 1891 ☆ 5523690

to the 23 of June 1865
(date of organization of the
13 US C H A).

2112

Enmto. Inmate

Co. I, 13 U.S. Col'd H. Art'y.

Corporal	Corporal

CARD NUMBERS.

1	11 1 7 9 7 3	26	
2	11 2 4 3 2 2	27	
3	11 2 4 4 8 3	28	
4	11 2 4 6 3 6	29	
5	9 12 9 8 19	30	
6		31	
7		32	
8		33	
9		34	
10		35	
11		36	
12		37	
13		38	
14		39	
15		40	
16		41	
17		42	
18		43	
19		44	
20		45	
21		46	
22		47	
23		48	
24		49	
25		50	

Book Mark:

See also 121. USCT Inf

A/1208575 Emm
S/216057 Ewd
S/F79834 Boas
A.232607 Mills

Thurston Ed

F | 13 H. Art'y. | U.S.C.T.

Thomas Spurlock

....., Co. G, 13 Reg't U. S. Col'd H. Art'y.

Appears on

Company Descriptive Book

of the organization named above.

DESCRIPTION.

Age 19 years; height 5 feet 7½ inches.

Complexion Blk

Eyes Blk; hair Blk

Where born Bath Co. Ky

Occupation Laborer

ENLISTMENT.

When Aug 22, 1863.

Where Maysville Ky

By whom Capt Hart; term 3 y'rs.

Remarks:

E. E. Wilson

(383g) Copyist.

I | 13 H. Art'y. | U.S.C.T.

Thomas Trumbo

Corp'l, Co. ....., 13 Reg't U. S. Col'd H. Art'y.

Appears on

M. and D. Roll of Men Transferred

to the organization named above,

from Co....., 121 Reg't U. S. Colored Infantry.

Roll dated June 23, 1865.

When enlisted Aug. 22, 1863

Period for which enlisted 3 years.

When mustered in May 4, 1865

Present or absent Not stated

Company to which assigned I

Remarks: Credited to Bath

Co. 9 U. Ky.

Book mark :

C. Williams,

(342) *Copyist.*

A | **13 H. Art'y.** | **U.S.C.T.**

Thomas Rumbo

Corp'l, Co. A, 13 Reg't U. S. Col'd H. Art'y.

Age ..... years.

Appears on

Company Muster Roll*

for to June 30, 1865.

Joined for duty and enrolled:

When Feb. 22, 1865.

Where Maysville Ky.

Period 3 years

Mustered in:

When May 4, 1865.

Where Greenupsburg Ky.

Present or absent Present

Stoppage, $ 100 for .....

Due Gov't, $ 100 for .....

Valuation of horse, $ 100

Valuation of horse equipments, $ 100

Remarks: Ref. from Co'd May 4 1865 Due U. S. for C. & E. $1.60

* First current roll. No muster-in roll of this company on file.

Book mark: .....

(3586) *Copyist.*

A | 13 H. Art'y. | U.S.C.T.

Thomas Brumbo

Burk, Co. I, 13 Reg't U. S. Col'd H. Art'y.

Appears on

Company Muster Roll

for July & Aug., 186 5.

Present or absent Present

Stoppage, $ 100 for

Due Gov't, $ 100 for

Valuation of horse, $ 100

Valuation of horse equipments, $ 100

Remarks: Deserted Sept 1st
on the 1st D.P.M. Muster
of, 1865 ()

NEXT ROLL ON FILE MUSTER OUT.

Book mark:

B. F. Hall

Copyist.

T | 13 H. Art'y. | U.S.C.T.

Thomas Trumbo

Corp'l Co. D, 13 Reg't U. S. Col'd H. Art'y.

Appears on **Co. Muster-out Roll,** dated Louisville Ky, Dec. 18, 186 5.

Muster-out to date Dec. 18, 186 5.

Last paid to June 30, 186 5.

Clothing account:

Last settled ....., 186 ; drawn since $ 100

Due soldier $ ..... 100; due U. S. $ 3 74/100

Am't for cloth'g in kind or money adv'd $ 100

Due U. S. for arms, equipments, &c., $ 100

Bounty paid $ 100 0/100; due $ 100

Remarks: .....

.....

.....

.....

.....

.....

Book mark: .....

D. Fish

(361) Copyist.

2113

Tucker, Andrew

Co E, 13 U.S.Col'd H. Art'y.

Private | Private

CARD NUMBERS.

1	55 1820	26	
2	55 24907	27	
3	55 25042	28	
4	9 12937 5	29	
5	J-18-CJ-1671	30	
6		31	
7		32	
8		33	
9		34	
10		35	
11		36	
12		37	
12		38	
14		39	
15		40	
16		41	
17		42	
18		43	
19		44	
20		45	
21		46	
22		47	
23		48	
24		49	
25		50	

Book Mark: T. 18 Vol. 9. 6 T. 1871
T. 40 V. 11. 6 T. 76

See also Reg A. 120. 2156 Inf.

F | 13 H. Art'y. | U.S.C.T.

Andrew Tucker

....., Co. K, 13 Reg't U.S. Col'd H. Art'y.

Appears on

Company Descriptive Book

of the organization named above.

DESCRIPTION.

Age 37 years; height 5 feet 4½ inches.

Complexion Black

Eyes Black; hair Black

Where born Augusta Co. Ky

Occupation Farmer

ENLISTMENT.

When Nov. 24, 1864.

Where Owensboro Ky

By whom Col. Hartridge; term 3 y'rs.

Remarks:

E. F. Dupont

(383*g*) *Copyist.*

J | 13 H. Art'y. | U.S.C.T.

Anderson Tucker

Pvt., Co. K, 13 Reg't U. S. Col'd H. Art'y.

Appears on

M. and D. Roll of Men Transferred

to the organization named above,

from Co. A, 120

Roll dated Camp Nelson, Ky. June 23, 1865.

When enlisted Feb 24, 1864.

Period for which enlisted 3 years.

When mustered in Feb 24, 1864.

Present or absent Not stated

Company to which assigned

Remarks:

Book mark:

Probate

(342) *Copyist.*

F | 13 H. Art'y. | U.S.C.T.

Andrew Tucker

Pvt, Co. K, 13 Reg't U. S. Col'd H. Art'y.

Age ..... years.

Appears on

Company Muster Roll*

for June 30, 1865.

Joined for duty and enrolled:

When Nov. 24, 1864

Where Owensboro Ky

Period 3 years

Mustered in: FROM SECOND AUDITOR'S ROLL.

NEXT ROLL ON FILE MUSTER OUT.

When Nov. 24, 1864

Where Owensboro Ky.

Present or absent absent

Stoppage, $ 100 for

Due Gov't, $ 100 for

Valuation of horse, $ 100

Valuation of horse equipments, $ 100

Remarks: Transferred from 120

U.S.C.I. Sick in Gen. (over)

* First current roll. No muster-in roll of this company on file.

Book mark:

Galligan

(8586) *Copyist.*

JAN. 5524907 1891

Hospt. Louisville Ky. since
June 25. 1865.
1st installment of bounty due.

F | 13 H. Art'y. | U.S.C.T.

Andrew Tucker

Pvt., Co. K., 13 Reg't U. S. Col'd H. Art'y.

Appears on **Co. Muster-out Roll,** dated Louisville Ky., Nov. 18, 1865.

Muster-out to date ....., 186 .

Last paid to Pay due from enlistment ....., 186 .

Clothing account:

Last settled ....., 186 ; drawn since $ 100

Due soldier $ 57 34/100; due U. S. $ 100

Am't for cloth'g in kind or money adv'd $ 100

Due U. S. for arms, equipments, &c., $ 100

Bounty paid $ ..... 100; due $ 100 00/100

Remarks: Absent Sick Gen'l. Hosp'l. Jeffersonville Ind. Not mustered out with organization. No discharge furnished.

Book mark: F. 18. Vol. 9. C. F. 1871
F. 40. V. 11. C. F. 76

Galligan

(361) *Copyist.*

J 13 Ala. 115 C.J

Andrew Jackson

, Co. K, 13 Reg't U.S.C.H.A.

NOTATION.

1548, B.1989, J.40, C.J.1876

Book mark with: J. 18, C.J. 1871

War Department,

Adjutant General's Office,

Washington, Jan. 23, *18*89.

He was admitted to 2d Div. Hospl Jeffersonville Ind. July 9, 1865 convalescent, and was returned to duty July 15, 1865. He failed to rejoin his command, and is regarded as having deserted August 15, 1865

H. Eichelberger

(438) *Copyist.*

2114

Tucker. Charles

Co H, 13 U.S.Col'd H. Art'y.

Private	Private

CARD NUMBERS.

1 55 18538	26
2 55 17961	27
3 55 23958	28
4 55 24112	29
5 55 24257	30
6 91292929	31
7	32
8	33
9	34
10	35
11	36
12	37
13	38
14	39
15	40
16	41
17	42
18	43
19	44
20	45
21	46
22	47
23	48
24	49
25	50

Book Mark:

See also Co F. 121. U Sldrs

7 | **13** H. Art'y. | **U.S.C.T.**

Carter Tucker

....., Co. H, 13 Reg't U. S. Col'd H. Art'y.

Appears on

Company Descriptive Book

of the organization named above.

DESCRIPTION.

Age 18 years; height 5 feet 7½ inches.

Complexion Dark

Eyes drk; hair drk

Where born Washington Co Va.

Occupation Laborer

ENLISTMENT.

When May 29, 1865.

Where Piketon Ky

By whom Lt Col Clapp; term 3 y'rs.

Remarks:

Beck

(383*g*) **Copyist.**

I | 13th a | U.S.C.T.

Mary Tucker

Pvt, Co. H 13th Reg't U. S. Col'd Inf.

Age ____ years.

Appears on

Company Muster Roll*

for May June, 1865.

Joined for duty and enrolled:

When May 29, 1865.

Where Pikeville Ky

Period 3 years.

Mustered in:

When June 5, 1865.

Where Trumpsburg Ky

Present or absent Present

Stoppage, $ 100 for ____

Due Gov't, $ 100 for ____

Valuation of horse, $ 100

Valuation of horse equipments, $ 100

Remarks: ____

* First current roll. No muster-in roll of this company on file.

Book mark: ____

W. H. Mauck

(358b) *Copyist.*

J | 13 H. Art'y. | U.S.C.T.

Charles Tucker

Pvt., Co. F, 13 Reg't U. S. Col'd H. Art'y.

Appears on

M. and D. Roll of Men Transferred

to the organization named above,

from Co. F, 121 Reg't U. S. Colored Infantry.

Roll dated Camp Nelson Ky June 23, 1865.

When enlisted May 29, 1865.

Period for which enlisted 3 years.

When mustered in June 5, 1865.

Present or absent Not stated

Company to which assigned

Remarks:

Book mark :

Woodson

(342) *Copyist.*

F | **13** H. Art'y. | **U.S.C.T.**

Charles Tucker

Pvt., Co. ....., 13 Reg't U. S. Col'd H. Art'y.

Appears on

M. and D. Roll of Men Transferred

to the organization named above,

from Co....., 121 Reg't U. S. Colored Infantry.

Roll dated June 23, 186 6.

When enlisted May 29, 186 6.

Period for which enlisted 3 years.

When mustered in June 6, 186 6.

Present or absent Not stated.

Company to which assigned A

Remarks: Credited to Pike

Co. 9 D. Ky.

Book mark :

C. Williams

(342) *Copyist.*

I | 13 H. Art'y. | U.S.C.T.

Charles Tucker

P—, Co. H, 13 Reg't U. S. Col'd H. Art'y.

Appears on

Company Muster Roll

for July ~ Aug, 1865.

Present or absent Present

Stoppage, $ 100 for

Due Gov't, $ 100 for

Valuation of horse, $ 100

Valuation of horse equipments, $ 100

Remarks:

NEXT ROLL ON FILE MUSTER OUT.

Book mark:

J Manuel

(358) *Copyist.*

13 H. Art'y. | **U.S.C.T.**

Charles Tucker

Pvt., Co. K, 13 Reg't U. S. Col'd H. Art'y.

Appears on **Co. Muster-out Roll,** dated Louisville Ky, Nov 18, 1865.

Muster-out to date Nov 18, 1865.

Last paid to June 30, 1865.

Clothing account:

Last settled ....., 186 ; drawn since $ 100

Due soldier $ ..... 100 ; due U. S. $ 2 98/100

Am't for cloth'g in kind or money adv'd $ 100

Due U. S. for arms, equipments, &c., $ 100

Bounty paid $ ..... 100 ; due $ 100

Remarks: .....

.....

.....

.....

.....

.....

Book mark: .....

C. Tucker

(361) *Copyist.*

2115

Turley Thomas L.

Co a, 13 U.S.Col'd H. Art'y.

Enlisted	Enlisted

CARD NUMBERS.

1	5.5.1.6.5.2.0	26	
2	5.5.1.9.8.4.1	27	
3	5.5.1.9.9.7.3	28	
4	5.5.2.0.1.0.7	29	
5	5.5.2.0.2.5.9	30	
6	5.5.2.0.4.2.6	31	
7	5.5.2.0.5.7.0	32	
8	9.1.2.8.0.5.9	33	
9	#3.1.3.6.0.0.2	34	
10		35	
11		36	
12		37	
13		38	
14		39	
15		40	
16		41	
17		42	
18		43	
19		44	
20		45	
21		46	
22		47	
23		48	
24		49	
25		50	

Book Mark:

See also

I | 13 H. Art'y. | U.S.C.T.

Thomas L Tinsley

....., Co. A, 13 Reg't U. S. Col'd H. Art'y.

Appears on

Company Descriptive Book

of the organization named above.

DESCRIPTION.

Age 29 years; height 5 feet 5½ inches.

Complexion Black,

Eyes Blk; hair Blk,

Where born Caldwell Co Kentucky,

Occupation Farmer

ENLISTMENT.

When Oct 26, 186 1.

Where Bowling Green

By whom Chittenden; term 3 y'rs.

Remarks:

Deadrick

(383*g*) **Copyist.**

J | 13 K.A. | U.S.C.T.

Thomas Louis Turley

Appears with rank of Pvt on

Muster and Descriptive Roll

of a detachment of U.S. Cold recruits forwarded for 13 Regt U.S. Cold H. Artly. Roll dated Bowling Green Ky, Oct 31, 1864.

Where born Caldwell Co Ky

Age 29 years; occupation farmer

When enlisted Oct 17, 1864.

Where enlisted B. Green Ky

For what period enlisted 3 years.

Eyes blk; hair blk

Complexion blk; height 5 ft. 5½ in.

When mustered in , 186 .

Where mustered in

Bounty paid $ 100; due $ 100

Clothing account:

Last settled , 186 ; drawn since $ 15 30/100

Date of first muster Oct 26, 1864.

Company to which assigned

Remarks: New recruit Caldwell Co - Owed Service to John H. Turley

Book mark:

H C Wall

(356m) Copyist.

F | **13 H. Art'y.** | **U.S.C.T.**

Thomas L. Tinsley

Pvt., Co. A, 13 Reg't U. S. Col'd H. Art'y.

Age ..... years.

Appears on

Company Muster Roll*

for to Dec 31, 186 4.

Joined for duty and enrolled:

When Oct. 26, 186 4.

Where Bowling Green Ky

Period 3 years

Mustered in:

When Oct. 26, 186 4.

Where Bowling Green Ky

Present or absent Present

Stoppage, $ 100 for .....

Due Gov't, $ 100 for .....

Valuation of horse, $ 100

Valuation of horse equipments, $ 100

Remarks: .....

* First current roll. No muster-in roll of this company on file.

Book mark: .....

W. T. Hughes

(3586) *Copyist.*

T | 13 H. Art'y. | U.S.C.T.

Thomas L. Sunley

Qua, Co. A, 13 Reg't U. S. Col'd H. Art'y.

Appears on

Company Muster Roll

for Jan & Feb, 186 5.

Present or absent Present

Stoppage, $ 100 for

Due Gov't, $ 100 for

Valuation of horse, $ 100

Valuation of horse equipments, $ 100

Remarks:

Due $40 first installment of Gov. Bounty

Book mark:

W. J. Hughes

(358) Copyist.

I. | 13 H. Art'y. | U.S.C.T.

Thomas L Tinsley

Pvt, Co. A, 13 Reg't U. S. Col'd H. Art'y.

Appears on

Company Muster Roll

for March & Apr, 186 5.

Present or absent Present

Stoppage, $ 100 for

Due Gov't, $ 100 for

Valuation of horse, $ 100

Valuation of horse equipments, $ 100

Remarks:

x Cancelled by Townsend Ex'r

Book mark:

W. T. Hughes

(358) *Copyist.*

G | 13 H. Art'y. | U.S.C.T.

Thomas L. Turley

Sini, Co. A, 13 Reg't U. S. Col'd H. Art'y.

Appears on

Company Muster Roll

for May & June, 186 5.

Present or absent Present

Stoppage, $ 100 for

Due Gov't, $ 100 for

Valuation of horse, $ 100

Valuation of horse equipments, $ 100

Remarks: 1st Installment

Bounty due

FROM SECOND AUDITOR'S ROLL.

Book mark:

W. W. Hughes

Copyist.

F | 13 H. Art'y. | U.S.C.T.

Richard L. Finley

Appears with rank of Pvt. on

Muster and Descriptive Roll of a Detachment of U. S. Vols. ~~forwarded~~ organized as

Co. A,

for the 13 Reg't U. S. Col'd H. Art'y. Roll dated

Barracks Nelson Ky. June 23, 186 5.

Where born Caldwell, Ky.

Age 27 y'rs; occupation Farmer

When enlisted Oct. 26, 186 4.

Where enlisted B. Green. Ky.

For what period enlisted 3 years.

Eyes Blk; hair Blk.

Complexion Blk; height 5 ft. 5 1/2 in.

When mustered in Oct. 26, 186 4.

Where mustered in B. Green. Ky.

Bounty paid $ 100; due $ 100

Where credited

Company to which assigned A.

Remarks:

Book mark:

Wagner

(339) Copyist.

I | 13 H. Art'y. | U.S.C.T.

Thomas L. Gurley

Sav, Co. A, 13 Reg't U. S. Col'd H. Art'y.

Appears on

Company Muster Roll

for July & Aug, 186 5.

Present or absent Present

Stoppage, $ 100 for

Due Gov't, $ 100 for

Valuation of horse, $ 100

Valuation of horse equipments, $ 100

Remarks:

Due 1st Installment
Slave Bounty $100

NEXT ROLL ON FILE MUSTER OUT.

Book mark:

W. G. Hughes

(358) Copyist.

G | 13 H. Art'y. | U.S.C.T.

Thomas L. Tinsley

Ohio, Co. A, 13 Reg't U. S. Col'd H. Art'y.

Appears on **Co. Muster-out Roll,** dated Louisville Ky, Nov. 18, 186 5.

Muster-out to date Nov. 18, 186 5.

Last paid to June 30, 186 5.

Clothing account:

Last settled ....., 186 ; drawn since $ 100

Due soldier $ ..... 100; due U. S. $ 1 65/100

Am't for cloth'g in kind or money adv'd $ 100

Due U. S. for arms, equipments, &c., $ 100

Bounty paid $ 100 00/100; due $ 100

Remarks: .....

Book mark: V 117 P. 385. 70

W. G. Hughes

(361) *Copyist.*

2116

Turner Charles

Co G, 13 U.S.Col'd H.Art'y.

Corporal	Corporal

CARD NUMBERS.

1	55-18247	26	
2	55-17951	27	
3	55-23389	28	
4	55-23540	29	
5	55-23687	30	
6	912908	31	
7		32	
8		33	
9		34	
10		35	
11		36	
12		37	
13		38	
14		39	
15		40	
16		41	
17		42	
18		43	
19		44	
20		45	
21		46	
22		47	
23		48	
24		49	
25		50	

Book Mark:

See also Co A. 12th U.S.C.Inf.

Hand - 044,0960

F | 13 H. Art'y. | U.S.C.T.

Charles Farmer

....., Co. F, 13 Reg't U. S. Col'd H. Art'y.

Appears on

Company Descriptive Book

of the organization named above.

DESCRIPTION.

Age 21 years; height 5 feet 8 inches.

Complexion Dark

Eyes Blk; hair Blk

Where born Mason Co. Ky.

Occupation Farmer

ENLISTMENT.

When Oct 8, 1864.

Where Mustered Oct 8 '64 Greenupsburg Ky

By whom Capt W C Tuel; term 3 y'rs.

Remarks: appointed Corpl to date from Nov 1 '64

Beck

(383*g*) **Copyist.**

T | 13 H. Art'y. | U.S.C.T.

Charles Turner

Capt., Co. G, 13 Reg't U. S. Col'd H. Art'y.

Appears on

M. and D. Roll of Men Transferred

to the organization named above,

from Co. A, 12th U.S. Col'd Infty

Roll dated Camp Nelson, Ky. June 23, 1865.

When enlisted Oct 8, 1864.

Period for which enlisted 3 years.

When mustered in Oct 8, 1864.

Present or absent Not stated

Company to which assigned

Remarks: Reported Exp. Oct. 8. 1864

Book mark :

W. Prosser

(342) *Copyist.*

G | 13 H. Art'y. | U.S.C.T.

Charles Turner

Corp'l, Co. ....., 13 Reg't U. S. Col'd H. Art'y.

Appears on

M. and D. Roll of Men Transferred

to the organization named above,

from Co....., 121 Reg't U. S. Colored Infantry.

Roll dated June 23, 1865

When enlisted Oct. 8, 1864

Period for which enlisted 3 years.

When mustered in Oct. 8, 1864

Present or absent Not stated

Company to which assigned G

Remarks: Credited to Mason Co. 9 D. Ky.

Book mark :

L. Williams

(342) *Copyist.*

30 | 13 H. Art'y. | U.S.C.T.

Charles Turner

Corpl., Co. G, 13 Reg't U. S. Col'd H. Art'y.

Age ..... years.

Appears on

Company Muster Roll*

for from June 23 to 30, 1865.

Joined for duty and enrolled:

When Oct. 8, 1864

Where Greencastle, Ky

Period 3 years

Mustered in:

When Oct. 8, 1864

Where Greencastle, Ky.

Present or absent Present

Stoppage, $ 40/100 for C. & G. E.

Due Gov't, $ 100 for

Valuation of horse, $ 100

Valuation of horse equipments, $ 100

Remarks:

* First current roll. No muster-in roll of this company on file.

Book mark:

(3586) H. Anderson Copyist.

No. | 13 H. Art'y. | U.S.C.T.

Charles Turner

Corpl, Co. G, 13 Reg't U. S. Col'd H. Art'y.

Appears on

Company Muster Roll

for July & Aug, 1865.

Present or absent Present

Stoppage, $ 40/100 for C. & G. E.

Due Gov't, $ 100 for

Valuation of horse, $ 100

Valuation of horse equipments, $ 100

Remarks:

NEXT ROLL ON FILE MUSTER OUT.

Book mark:

W. Anderson
Copyist.

(I) | **13 H. Art'y.** | **U.S.C.T.**

Charles Turner

Corpl, Co. G, 13 Reg't U. S. Col'd H. Art'y.

Appears on **Co. Muster-out Roll,** dated Louisville, Ky, Nov 18, 186 5.

Muster-out to date Nov 18, 186 5.

Last paid to June 30, 186 5.

Clothing account:

Last settled ....., 186 ; drawn since $ 100

Due soldier $ ..... 100; due U. S. $ 7 00/100

Am't for cloth'g in kind or money adv'd $ 100

Due U. S. for arms, equipments, &c., $ 100

Bounty paid $ 100 00/100; due $ 100

Remarks: Appt Corpl Oct 8, 1864. Due Us for Rd last Jonsion 08. He has the difference of a privates pay and noncommissioned officers due him from the 28 of Feb 1865 (date when last paid as the 121 Us 6d) to the 23 of June 1865 (date of organ-

Book mark: 1576-1879. Lover 7

---

a W allen

(361) *Copyist.*

JAN. 16 5523687 ☆ 1891 ☆

nization of the 13 U.S.C.H.A.)

2117

Turner. Gilbert

Co F, 13 U.S.Col'd H.Art'y.

Private	Private

CARD NUMBERS.

1	55 1869 2	26	
2	55 17963	27	
3	55 2446 28	28	
4	55 2458 5	29	
5	58 2473 5	30	
6	9 1298 09	31	
7		32	
8		33	
9		34	
10		35	
11		36	
12		37	
13		38	
14		39	
15		40	
16		41	
17		42	
18		43	
19		44	
20		45	
21		46	
22		47	
23		48	
24		49	
25		50	

Book Mark:

See also Leo E 121. USColInf

J. 97579—2nd.

S1218936 Ro. m & m.
S1218417 Ro. Aff

J. H. Townsend Dec'r

I | 13 H. Art'y. | U.S.C.T.

Gilbert Turner

....., Co. D, 13 Reg't U. S. Col'd H. Art'y.

Appears on

Company Descriptive Book

of the organization named above.

DESCRIPTION.

Age 24 years; height 5 feet 5 inches.

Complexion Dark

Eyes Hazle; hair Blk

Where born Montgomery Co. Ky

Occupation Laborer

ENLISTMENT.

When Feb 22, 1865.

Where Hyattsville Md

By whom Capt. Hart; term 3 y'rs.

Remarks:

E. F. Ascombe

(383g) Copyist.

V | 13 H. Art'y. | U.S.C.T.

Gilbert Turner

Pvt, Co. I, 13 Reg't U. S. Col'd H. Art'y.

Appears on

M. and D. Roll of Men Transferred

to the organization named above,

from Co E 121 USC Inf

Roll dated Camp Nelson Ky June 23, 1865.

When enlisted 22 Apr, 1865.

Period for which enlisted 3 years.

When mustered in 4 May, 1865.

Present or absent Not stated

Company to which assigned

Remarks: Credit to Berlin Co, 9th Dist Ky

Book mark :

A Meadows

(342) *Copyist.*

T | 13 H. Art'y. | U.S.C.T.

Gilbert Turner

Pvt., Co. ....., 13 Reg't U. S. Col'd H. Art'y.

Appears on

M. and D. Roll of Men Transferred

to the organization named above,

from Co....., 121 Reg't U. S. Colored Infantry.

Roll dated June 23, 1865.

When enlisted Apr. 22, 1865.

Period for which enlisted 3 years.

When mustered in May 4, 1865.

Present or absent Not stated

Company to which assigned I

Remarks: Credited to Bath Co.

9 D. Ky.

Book mark :

C. Williams

(342) *Copyist.*

D | **13 H. Art'y.** | **U.S.C.T.**

Gilbert Turner

P, Co. D, 13 Reg't U. S. Col'd H. Art'y.

Age ..... years.

Appears on

Company Muster Roll*

for June 30, 1865.

Joined for duty and enrolled:

When Nov. 22, 1863.

Where Maysville Ky

Period 3 years

Mustered in:

When May 4, 1864.

Where Brandenburg Ky

Present or absent Present

Stoppage, $ 100 for .....

Due Gov't, $ 100 for .....

Valuation of horse, $ 100

Valuation of horse equipments, $ 100

Remarks: .....

* First current roll. **No muster-in roll of this company on file.**

Book mark: .....

(3586)

Copyist.

G | 13 H. Art'y. | U.S.C.T.

Wilbert A Dimmick

R.L., Co. I, 13 Reg't U. S. Col'd H. Art'y.

Appears on

Company Muster Roll

for July & Aug., 1865.

Present or absent Present

Stoppage, $.....100 for .....

.....

Due Gov't, $.....100 for .....

.....

Valuation of horse, $.....100

Valuation of horse equipments, $.....100

Remarks:.....

NEXT ROLL ON FILE MUSTER OUT.

Book mark:.....

S. A. Fish

(358) Copyist.

D | 13 H. Art'y. | U.S.C.T.

Gilbert Gunner

E, Co. 6, 13 Reg't U. S. Col'd H. Art'y.

Appears on **Co. Muster-out Roll,** dated Louisville Ky, June 18, 186 5.

Muster-out to date June 18, 186 5.

Last paid to June 30, 186 5.

Clothing account:

Last settled ....., 186 ; drawn since $ 100

Due soldier $ ..... 100; due U. S. $ 27 42/100

Am't for cloth'g in kind or money adv'd $ 100

Due U. S. for arms, equipments, &c., $ 100

Bounty paid $ 100 0/100; due $ 100

Remarks: .....

Book mark: .....

G. F. Gunner

Copyist.

2.110

Turner, Henry

Co. D., 13 U.S. Col'd H. Art'y.

Private	Private

CARD NUMBERS.

1	5-5-1 7 2 3 4	26	
2	5-5-2 2 1 9 5-	27	
3	5-5-2 2 3 5-3	28	
4	5-5-2 2 5-8 1	29	
5	9 1 2 8 6 0 0	30	
6	2 7 4 2 1 6 9 5-	31	
7		32	
8		33	
9		34	
10		35	
11		36	
12		37	
13		38	
14		39	
15		40	
16		41	
17		42	
18		43	
19		44	
20		45	
21		46	
22		47	
23		48	
24		49	
25		50	

Book Mark:

See also

S. 125437 1. P.O. Mail

I | 13 H. Art'y. | U.S.C.T.

Henry Turner

....., Co. D, 13 Reg't U. S. Col'd H. Art'y.

Appears on

Company Descriptive Book

of the organization named above.

DESCRIPTION.

Age 25 years; height 5 feet 3½ inches.

Complexion Hazel Colored ×

Eyes Hazel × ; hair Black Wooly ×

Where born Mexico Pa

Occupation Farmer

ENLISTMENT.

When Mar 8, 1863.

Where Philad Pa

By whom Capt Longworth; term 1 y'rs.

Remarks:

× Corrected by McD Dec 19/91

Deserted

(383*g*) **Copyist.**

Co. I | 13 H. Arty. U.S.C.T.

Henry Tupper

Appears with rank of Sergt on

Muster and Descriptive Roll of a Detachment of Substitutes forwarded

for the 13 Reg't U.S.C. H. Arty. Roll dated

Joliet Ill., Mar. 11, 1865.

Where born Mississippi

Age 25 y'rs; occupation Farmer,

When enlisted May 8, 1865

Where enlisted Joliet Ill.

For what period enlisted 1 years.

Eyes Hazel; hair Woolly

Complexion Colored; height 5 ft. 3½ in.

When mustered in May 8, 1865

Where mustered in Joliet.

Bounty paid $ 100; due $ 100

Where credited Ivesca LaSalle

Company to which assigned 6th 6th Dist. Ill. 28th Sub. Dist.

Remarks: Substitute for Charles Dodge, enrolled man.

Book mark:

Parkin

(340c) *Copyist*

13 H. Art'y. | U.S.C.T.

Thomas Tanner

Co. D, 13 Reg't U. S. Col'd H. Art'y.

Age ..... years.

Appears on

Company Muster Roll*

for Feb Apr 30, 1865.

Joined for duty and enrolled:

When Sept 8, 1865.

Where Point Lookout

Period ..... years

Mustered in:

When June 8, 1865.

Where Point Lookout

Present or absent Present

Stoppage, $ 100 for .....

Due Gov't, $ 100 for .....

Valuation of horse, $ 100

Valuation of horse equipments, $ 100

Remarks: .....

* First current roll. No muster-in roll of this company on file.

Book mark: .....

(3586) Copyist.

I | 13 H. Art'y. | U.S.C.T.

Henry Turner

Appears with rank of Pvt on

Muster and Descriptive Roll of a Detachment of U. S. Vols. ~~forwarded~~ Organized

for the 13 Reg't U. S. Col'd H. Art'y. Roll dated

Not Dated, ____, 186 .

Where born Mississippi

Age 25 y'rs; occupation Farmer

When enlisted Mar 18, 1865.

Where enlisted Joliet, Ill.

For what period enlisted 1 years.

Eyes Hazel; hair Wavey

Complexion Med; height 5 ft. 3 1/2 in.

When mustered in Mar 8, 1865.

Where mustered in Joliet, Ill.

Bounty paid $ 100; due $ 100

Where credited Camp Dist. Ill.

Company to which assigned K,

Remarks:

Book mark:

(339) B Taylor
Copyist.

U.S.C.T.

Henry Spencer

Co. D, 13 Reg't U. S. Col'd Inf.

Appears on

Company Muster Roll

for May & June, 1865.

Present or absent Absent

Stoppage, $ 100 for

Due Gov't, $ 100 for

Valuation of horse, $ 100

Valuation of horse equipments, $ 100

Remarks: Transferred to
Co. D. 13 Regt U.S.C.T. from
Hospital at Smithland
Ky. Dec 1st 1865

FROM SECOND AUDITOR'S ROLL.

NEXT ROLL ON FILE MUSTER OUT.

Book mark:

Leger

(358) *Copyist.*

1 | **13** H. Art'y. | **U.S.C.T.**

Henry Turner

Pvt., Co. D, 13 Reg't U. S. Col'd H. Art'y.

Appears on **Co. Muster-out Roll,** dated Louisville Ky, Nov 8, 186 5.

Muster-out to date ....., 186 .

Last paid to June 30, 186 5.

Clothing account:

Last settled....., 186 ; drawn since $.....100

Due soldier $.....100; due U. S. $.....100

Am't for cloth'g in kind or money adv'd $.....100

Due U. S. for arms, equipments, &c., $.....100

Bounty paid $.....100; due $.....100

Remarks: Deserted Oct 15/63 Covington Ky.

Book mark: .....

(361) Copyist.

2119

Turner John

Co S, 13 U.S. Col'd H. Art'y.

Enlisted	Enlisted

CARD NUMBERS.

1	5-5-17236	26	
2	5-5-33162	27	
3	5-5-22355-	28	
4	5-5-19422	29	
5	5-5-2250X	30	
6	5-51955-18	31	
7	9/12860 2	32	
8	T-14-VOL-9-1871.	33	
9		34	
10		35	
11		36	
12		37	
13		38	
14		39	
15		40	
16		41	
17		42	
18		43	
19		44	
20		45	
21		46	
22		47	
23		48	
24		49	
25		50	

Book Mark: T.14.Vol.9.6D.70 1871

See also

Assignor to
S. 2231460 P.O. Natl
D 2310472 P.O. Rel.

J. H. Emerson Co.

I | 13 H. Art'y. | U.S.C.T.

John Sumner

....., Co. D, 13 Reg't U. S. Col'd H. Art'y.

Appears on

Company Descriptive Book

of the organization named above.

DESCRIPTION.

Age 25 years; height 5 feet 6¾ inches.

Complexion Blk

Eyes Brown; hair Yellow

Where born Montgomery Tennessee

Occupation Farmer

ENLISTMENT.

When May 22, 1863.

Where Bowling Green Ky

By whom Capt Robson?; term ..... y'rs.

Remarks: .....

Deserted

(383*g*) Copyist.

T | 13 H. Art'y. | U.S.C.T.

John Turner

Appears with rank of Pvt on

Muster and Descriptive Roll of a Detachment of U. S. Vols. forwarded

for the 13 Reg't U. S. Col'd H. Art'y. Roll dated

Bowling Green Ky. May 25, 1865

Where born Montgomery Co. Tenn.

Age 25 y'rs; occupation Farmer

When enlisted May 22, 1865

Where enlisted B. Green Ky.

For what period enlisted 3 years.

Eyes Brn; hair Black

Complexion Yellow; height 5 ft. 6 3/4 in.

When mustered in ....., 186 .

Where mustered in .....

Bounty paid $ 100; due $ 100

Where credited 3d Cong Dist Ky.

Company to which assigned .....

Remarks: New Recruit. Warren Co.
Owed Service to Contraband.

Book mark: .....

Harris

(339) *Copyist.*

E. Lyman | U.S.C.T.

Edw. Lyman

Pvt, Co. D, 13 Reg't U. S. Col'd Inf.

Appears on

Company Muster Roll

for Aug & Sept, 1863.

Present or absent Present

Stoppage, $ 100 for

Due Gov't, $ 100 for

Valuation of horse, $ 100

Valuation of horse equipments, $ 100

Remarks: Had received one
Co. I. Bounty Due & one
Installment Govt
Bounty.

FROM SECOND AUDITOR'S ROLL.

NEXT ROLL ON FILE MUSTER OUT.

Book mark:

Geyer

(358) *Copyist.*

A | 13th Arty. | U.S.C.T.

John Tanner

Pvt, Co. D, 13 Reg't U. S. Col'd H. Arty.

Appears on a

List of Discharges furnished by C. M. O. of State,

under the provisions of circular dated A. G. O., June 29, 1865.

Discharge furnished Dec. 15, 1864;

to date from Nov. 18, 1864.

Remarks:

Book Mark:

Contraband

(360) *Copyist.*

I | **13** H. Art'y. | **U.S.C.T.**

John Turner

Appears with rank of Pvt on

Muster and Descriptive Roll of a Detachment of U. S. Vols. ~~forwarded~~ Organized

for the 13 Reg't U. S. Col'd H. Art'y. Roll dated

Not Dated, ____, 186 .

Where born Montgomery Tennessee

Age 25 y'rs; occupation Farmer

When enlisted May 22, 1863.

Where enlisted Bowling Green, Ky.

For what period enlisted 3 years.

Eyes Blk; hair Brown

Complexion Yello; height 5 ft. 6 3/4 in.

When mustered in May 22, 1863.

Where mustered in B. Green, Ky.

Bounty paid $33 1/3 100; due $ 100

Where credited

Company to which assigned C.

Remarks:

Book mark:

E. Taylor

(339) Copyist.

13 H. Art'y. | U.S.C.T.

John Evans

Pvt., Co. D, 13 Reg't U. S. Col'd H. Art'y.

Appears on **Co. Muster-out Roll,** dated Louisville Ky, June 18, 186 5.

Muster-out to date ....., 186 .

Last paid to June 30, 186 5.

Clothing account:

Last settled ....., 186 ; drawn since $ 00

Due soldier $ 13 69/100; due U. S. $ 00

Am't for cloth'g in kind or money adv'd $ 00

Due U. S. for arms, equipments, &c., $ 00

Bounty paid $ 100 00; due $ 00

Remarks: Absent sick at Covington Ky since Oct 1st 65 Not Mustered out with organization No Discharge furnished

Book mark: MOR on file T. 14 Vol 9 C.T. # 1811*

* Corrected 5-12-1903. Austin Leger

(361) *Copyist.*

Co. I | 13 N. Arty. | U.S.C.T.

John Turner

Priv., Co. D, 13 Reg't U. S. Col'd N Arty

Appears on an

Individual Muster-out Roll

of the organization named above. Roll dated Louisville, Ky., Dec 15, 1865.

Muster-out to date Nov. 18, 1865.

Last paid to June 30, 1865.

Clothing account:

Last settled ....., 186 ; drawn since $ 100

Due soldier $ 15 96/100; due U. S. $ 100

Am't for cloth'g in kind or money adv'd $ 100

Due U. S. for arms, equipments, &c., $ 100

Bounty paid $ 100 00/100; due $ 100

Remarks: Absent sick at Jefferson Co. Hosp. Jeffersonville Ind. at Co. Muster out.
Discharged in accordance with Cir. from A.G.O. of June 7. 65. Muster out date from Nov. 18/61 date of Co. Muster out

Book mark:

(348) Copyist.

J 13 Ala 11 S.C.I

John Turner

, Co. F, 13 Reg't Ala S.C.H.A.

NOTATION.

Book mark: J, 14, C.J. 1871

Record and Pension Office,

WAR DEPARTMENT.

This book mark refers only to a report from the medical records, made by the Surgeon General to the Adjutant General, relative to the above-named man. As the medical records have since been carded, no transcript of this report is made hereon.

(491) *Copyist.*

Turner, John

F, Co. D, 13 Reg't 116 N C

2 Enclosures.

Bed Cards 1	Descriptive Lists
Burial Records	Final Statements
Certs. of Dis. for Discharge	Furloughs
C. M. Charges	Med. Des. Lists
Med. Certificates	Orders

Other papers relating to—

Admission to Hosp'l	Furlough
Casualty Sheet (Officer's)	Med. Examination
Confinement	Misc. Information
Contracts	Pay or Clothing
Death or Effects	Personal Reports
Desertions	Rank
Discharge from Hosp'l 1	Transfer to Hosp'l
Discharge from Service	Transfer to V. R. C.
Duty	Transportation

Ward B. d. 18

Hospital Number 16002.

Name John Turner

Age 25 *Nativity* Texas

Married ~~or Single~~

Residence ~~Ky~~ Cheatham Co Tenn

Post Office address of wife or nearest relative. Susan Turner Louisville Ky

Rank Priv *Co.* I *Regiment* 15th Ky Artly

When admitted Nov 14th 65

From what source Covington Ky

Diagnosis: (*in surgical cases, state explicitly seat and character of wound or injury.*

Diarrhoea

18

Jefferson G. H.
Jeffersonville, Ind.

On what occasion wounded

Date

Nature of missile or weapon

TREATMENT.

[HERE NOTE IMPORTANT COMPLICATIONS AND ALL OPERATIONS.]

RESULT AND DATE.

To report to Col. Sidell, C. M.O.
Louisville, Decbr. 12. 65

✓

Klinton U. S. Army General Hospital,

Department of the Gulf, Ward No. 15 Dec. 15th 1865.

Sir,

I have to inform you that the following named Soldiers are this day ~~returned to~~ discharged *duty, and are directed to report to you.*

NAMES.	RANK.	REGIMENT.	CO.	REMARKS.
[illegible]	Private	13th U.S. A. C.	D	

Admitted to Hospital, Nov. 15th and has received neither Arms or Accoutrements.

I am, sir, very respectfully,
Your obedient servant,

M. Goldsmith
Surgeon U.S.V. in charge of Hospital.

Bvt. Lt. Col. H. C. Tidell,
C. M. & D. O.

2120

Turner, Sam

Co M, 13 U.S.Col'd H. Art'y.

Private	Private

CARD NUMBERS.

1	55188551	26	
2	55191399	27	
3	55265654	28	
4	55258952	29	
5	55259931	30	
6	91299664	31	
7		32	
8		33	
9		34	
10		35	
11		36	
12		37	
13		38	
14		39	
15		40	
16		41	
17		42	
18		43	
19		44	
20		45	
21		46	
22		47	
23		48	
24		49	
25		50	

Book Mark:

See also Co. A. 72 USCT. Inf.

A 055247 - Docket

J. H. Vincent Esq

I / 13 Ky. U.S.C.T.

Sam Jones

....., Co. M, 5 Reg't U. S. Col'd Hvy

Appears on

Company Descriptive Book

of the organization named above.

DESCRIPTION.

Age 18 years; height 5 feet 4 inches.

Complexion Dk

Eyes Dk ; hair Dk

Where born Boyle Co. Ky

Occupation Farmer

ENLISTMENT.

When Dec. 17, 1864.

Where Covington Ky

By whom Maj. Mitchell, term 3 y'rs.

Remarks:

E. D. Sibsamille

(383*g*) Copyist.

J | **13** H. Art'y. | **U.S.C.T.**

Sam Turner

Pvt, Co. M, 13 Reg't U. S. Col'd H. Art'y.

Age ..... years.

Appears on

Company Muster Roll*

for June 23 to 30, 1865.

Joined for duty and enrolled:

When Dec 17, 1864.

Where Covington Ky

Period 3 years

Mustered in:

When Dec 17, 1864.

Where Covington Ky

Present or absent Present

Stoppage, $ 100 for .....

Due Gov't, $ 100 for .....

Valuation of horse, $ 100

Valuation of horse equipments, $ 100

Remarks: .....

* First current roll. No muster-in roll of this company on file.

Book mark: .....

Abbott

T | 13 H. Art'y. | U.S.C.T.

Sam Turner

Pvt., Co. M, 13 Reg't U. S. Col'd H. Art'y.

Appears on

M. and D. Roll of Men Transferred

to the organization named above,

from Co A. 72 U S Col Inf

Roll dated July 3, 186 5.

When enlisted Dec 17, 1864.

Period for which enlisted 3 years.

When mustered in Dec 17, 1864.

Present or absent Not stated

Company to which assigned

Remarks: Credited to

7th D, Ky

Book mark :

(342) J Hudson Copyist.

T | 13 H. Art'y. | U.S.C.T.

Sam Turner

Pvt., Co....., 13 Reg't U. S. Col'd H. Art'y.

Appears on

M. and D. Roll of Men Transferred

to the organization named above,

from 72 U.S.C.I.

Roll dated July 3, 1865.

When enlisted Dec 17, 1864.

Period for which enlisted 3 years.

When mustered in Dec 17, 1864.

Present or absent not stated

Company to which assigned 121

Remarks:

7 Dist. Ky

Book mark :

J Underwood

(342) *Copyist.*

J | 13 H. Art'y. | U.S.C.T.

Sam Turner

Pvt, Co. M, 13 Reg't U. S. Col'd H. Art'y.

Appears on

Company Muster Roll

for July & Aug, 1865.

Present or absent Present

Stoppage, $ 100 for

Due Gov't, $ 100 for

Valuation of horse, $ 100

Valuation of horse equipments. $ 100

Remarks:

NEXT ROLL ON FILE MUSTER OUT.

Book mark:

Abbott

(358) Copyist.

T | 13 H. Art'y. | U.S.C.T.

Sam Turner

Pvt, Co. M, 13 Reg't U. S. Col'd H. Art'y.

Appears on **Co. Muster-out Roll,** dated Louisville Ky, Nov 18, 1865.

Muster-out to date Nov 18, 1865.

Last paid to June 30, 1865.

Clothing account:

Last settled ....., 186 ; drawn since $ 100

Due soldier $ ..... 100; due U. S. $ 15 31/100

Am't for cloth'g in kind or money adv'd $ 100

Due U. S. for arms, equipments, &c., $ 100

Bounty paid $ 100 -/100; due $ 100

Remarks: .....

Book mark: 6 817 Ky

Q6605

(361) *Copyist.*

Turner, Sam

L, Co. M, 13 U.S.C.H.A. Reg't

1 **Enclosures.**

Bed Cards	Descriptive Lists
Burial Records	Final Statements
Certs. of Dis. for Discharge	Furloughs
C. M. Charges	Med. Des. Lists
Med. Certificates	Orders

Other papers relating to—

Admission to Hosp'l	Furlough
Casualty Sheet (Officer's)	Med. Examination
Confinement	Misc. Information /
Contracts	Pay or Clothing
Death or Effects	Personal Reports
Desertions	Rank
Discharge from Hosp'l	Transfer to Hosp'l
Discharge from Service	Transfer to V. R. C.
Duty	Transportation

MICROFILM PUBLICATION M 1834

COMPILED MILITARY SERVICE RECORDS
OF VOLUNTEER UNION SOLDIERS WHO SERVED WITH
THE UNITED STATES COLORED TROOPS (USCT)
13TH REGIMENT OF HEAVY ARTILLERY

PERSONAL PAPERS' TARGET SHEET

PLEASE NOTE THE CHECKED INFORMATION ABOUT THE PERSONAL PAPERS IN THIS FILE:

☐ NO PERSONAL PAPERS WERE FOUND IN THIS FILE WHEN THE RECORDS WERE ARRANGED FOR MICROFILMING.

☑ 2 PERSONAL PAPER(S) FOUND IN THIS FILE WHEN THE RECORDS WERE ARRANGED FOR MICROFILMING.

War Department,

ADJUTANT GENERAL'S OFFICE,

Washington, Apl 11th 1867.

Respectfully returned to the Commission for the State of Ky, with the information that Saml Turner was enlisted at Lexington Ky Dec 17th 1864 and was mustered in as Pvt. Co. M. 13th U.S.C.T. Ky Dec. 17th 1864 C. 1817 Ky

E. D. Kingsbury

Asst. Adj't General.

No. 1817

APPLICATION OF

Baxter & Clay

OF

Bourbon County Ky

FOR COMPENSATION FOR SLAVE,

Named Samuel Turner

Enlisted 17th Dec 1864,

In Com. M, 13th Ky Regiment,

U. S. COLORED TROOPS.

Received Feby 19, 1867.

Compensation Awarded

_____, 186__.

_____ Dollars.

_____

President of Board of Claims.

Claimant's Attorney,

_____,

_____

Claimant's Post-office Address,

Paris

Bourbon Co Ky

FRANKFORT COMMONWEALTH PRINT.

Headquarters Kentucky Volunteers,

Adjutant-General's Office,

Frankfort, Jany 26, 1867.

I hereby certify, that it appears from the U. S. Muster-In Rolls on file in this Office, that Sam Turner was enrolled on the 17 day of December, 1864, at Covington Ky, by Maj Mitchell, and mustered into the U. S. service on the 17 day of December, 1864, at Covington Ky by Maj Mitchell, to serve three years. Said Sam Turner is described as follows: Age, 18 years; eyes, Black; hair, Black; complexion, Black; height, 5 feet 4 inches. It further appears from said Rolls, that Sam Turner owed service to Brutus Clay, was credited to Bourbon County, Ky., and was assigned to Co. "K", 13 Regiment U. S. C. Arty

In Testimony Whereof, I have hereunto set my hand, and affixed my Official Seal, this 26 day of Jany, 1867.

L. H. Lindsay

Adjutant General of Kentucky.

B. ——, R. 513

No.

CLAIM OF

Bowles L. Clay

FOR THE COMPENSATION OF SLAVE NAMED

Samuel Turner

I Bowles L. Clay a loyal citizen, and a resident of ,
County of Bourbon , State of Kentucky, hereby claim compensation, under the provisions of Section 24, act approved February 24, 1864, and section 2, act approved July, 28, 1866, for my slave Samuel Turner , enlisted 17th day of Dec., 1864, at Covington Ky. , by Maj. Hatcher in the 13th Artillery regiment U. S. Colored Troops, Co. M ; certificate of which enlistment, and a descriptive list, as required, accompany this application. That I did not acquire said slave subsequent to said enlistment, but had a valid title to him at the date of said enlistment, and previous thereto: I having acquired my title to him and my ownership over him as follows, to-wit: Raised by me. inherited him Mother from Green Clays Estate.

In proof of my loyalty to the Constitution and Government of the United States, I present the accompanying oath, which I have taken, signed and acknowledged; to be filed with this application, in accordance with requirement of General Orders, No. 329, 1863, War Department, Adjutant General's Office.

Bowles L. Clay

Paris Ky Feby , 1867.

OATH OF ALLEGIANCE.

I, Bowles L. Clay , the owner and Claimant, do solemnly swear that the foregoing claim is a just and true claim due to me as master and owner of the said slave, and that the facts alleged in said claim in respect to the draft or enlistment (as the case may be) of said slave into the Military service of the United States are true. And I do further swear that I have never joined, or been concerned in, any insurrection or rebellion; that I have never borne arms against the United States; that I have never given any aid, countenance, counsel or encouragement to any person or persons engaged, or whom I had reason to believe were about to engage, in insurrection, rebellion or armed hostility against the United States; that I have neither sought, nor accepted, nor attempted to exercise the functions of any office, civil or military, nor to perform any service whatever, under any authority or pretended authority in hostility to the United States; that I have not yielded a voluntary support to any insurrection, rebellion or pretended government, authority, power or constitution within the United States hostile thereto. And I do further swear that, to the best of my knowledge and ability, I have supported and defended, and will continue to support and defend, the United States against all enemies, foreign and domestic; and that I have supported, defended and obeyed, and will continue to support, defend and obey, the Constitution and laws of the United States; that I will bear true faith and allegiance to the same; and that I take this oath freely, without any mental reservation or purpose of evasion: So help me God.

Bowles L. Clay

Sworn to and subscribed before me, at Paris ,
this 16 day of February, 1867.

H. J. Brown Notary
Public Bourbon Co Ky

PROOF OF OWNERSHIP.

STATE OF KENTUCKY, }
COUNTY OF Bourbon } SS.

We Sidney Clay and C. F. Clay each of lawful age, and resident citizens of the State and County aforesaid, do certify that Boutus J. Clay of the State and County aforesaid, was on the 17th day of December 1864, the lawful owner of the slave named Aunt Fanny; referred to and described in the foregoing claim for compensation.

Sidney Clay
C. F. Clay

Sworn to and subscribed before me a Notary Public for the County of Bourbon State of Kentucky, this the 16 day of Feby 1867.

W. J. Brown Notary Public

PROOF OF LOYALTY.

STATE OF KENTUCKY, }
COUNTY OF Bourbon } SS.

We W. W. Mitchell and Newton N. Rice loyal men and each of lawful age, and resident citizens of the City of Paris in the State and County aforesaid, upon our oaths declare that we have known Boutus J. Clay a resident of the State and County aforesaid, since the 4th day of March, 1861, and know that he has firmly and faithfully maintained his or her adherence and allegiance to the Government of the United States, by defending its cause against the Government and forces of the so-called Confederate States of America, in all suitable and practicable ways, and according to his or her ability and opportunity.

W. W. Mitchell
N. N. Rice

Sworn to and subscribed before me a Notary Public for the county of Bourbon State of Kentucky, this the 16 day of Feby 186 7.

W. J. Brown Notary Public

POWER OF ATTORNEY.

My Post-Office address is ..... County of ..... State of Kentucky, and I hereby direct that all communications to me, touching this claim, be sent under cover to ....., who is hereby appointed and constituted my true and lawful attorney, to prosecute this claim for me, and who is hereby authorized and empowered to receive and receipt for any award, order, draft, certificate, voucher, warrant, papers or money that may be issued in the adjustment of this claim, or the payment thereof, the same as I might or could do in person were I present and acting for myself, and to file any additional evidence or papers that may be required in the prosecution of this claim.

[WITNESS.]

The owner signs here. .....

50 CENT STAMP. .....

Two witnesses to owner's signature sign here. .....

2121

Turner. Washington

Co. D., 13 U.S. Col'd H. Art'y.

Private.	Private.

CARD NUMBERS.

1	5-5-1723 5-	26	
2	5-5-1609 6	27	
3	5-5-1621 4	28	
4	5-5-2[illegible]19 6	29	
5	5-5-2235 5-4	30	
6	5-5-2254-03	31	
7	9-128601	32	
8		33	
9		34	
10		35	
11		36	
12		37	
13		38	
14		39	
15		40	
16		41	
17		42	
18		43	
19		44	
20		45	
21		46	
22		47	
23		48	
24		49	
25		50	

Book Mark:

See also

S/1178495 P.O. Ltd
G.S. 201 (N-21-42) mgk

Dept Insured Ltr

I | 13 H. Art'y. | U.S.C.T.

Washington Lunard

....., Co. D, 13 Reg't U. S. Col'd H. Art'y.

Appears on

Company Descriptive Book

of the organization named above.

DESCRIPTION.

Age 20 years; height 5 feet 7½ inches.

Complexion Dk

Eyes Blk; hair Yellow

Where born Knox Co Indiana

Occupation Laborer

ENLISTMENT.

When Mar 30, 1865.

Where Peoria Ill

By whom Capt Mann; term 1 y'rs.

Remarks: .....

Deadrick

(383*g*) *Copyist.*

I | 13 H. Art'y. | U.S.C.T.

Washington James

Appears with rank of Pvt on

Muster and Descriptive Roll of a Detachment of U. S. Vols. forwarded

for the 13 Reg't U. S. Col'd H. Art'y. Roll dated

Peoria Ill, Mch 31, 1865.

Where born Knox Ind

Age 20 y'rs; occupation Laborer

When enlisted Mch 30, 1865.

Where enlisted Peoria Ill

For what period enlisted 1 years.

Eyes Black; hair Black

Complexion Yellow; height 5 ft. 7½ in.

When mustered in Mch 31, 1865.

Where mustered in Peoria Ill

Bounty paid $33 33/100; due $ 00/100

Where credited Benton Barracks Co Ill
5 Cong Dist 6th Sub Dist.

Company to which assigned

Remarks:

Book mark:

Rose

(339) *Copyist.*

F | 13 H. Art'y. | U.S.C.T.

Washington Turner

Appears with rank of Pvt on

Muster and Descriptive Roll of a Detachment of U. S. Vols. forwarded

for the 13 Reg't U. S. Col'd H. Art'y. Roll dated

Camp Butler Ill, Apl 14, 1865.

Where born Knox Ind

Age 20 y'rs; occupation Laborer

When enlisted Mch 30, 1865.

Where enlisted Peoria Ill

For what period enlisted 1 years.

Eyes Blk; hair Blk

Complexion Yellow; height 5 ft. 7½ in.

When mustered in Mch 31 1865.

Where mustered in Peoria Ill

Bounty paid $ 33 33/100; due $ 00/100

Where credited Burtin, Bureau Co Ill

Company to which assigned 5 Dist 6th Sub

Remarks:

Book mark:

Rose

(339) Copyist.

5

13 H. Art'y. | U.S.C.T.

Washington James

Pvt., Co. D, 13 Reg't U. S. Col'd H. Art'y.

Age ..... years.

Appears on

Company Muster Roll*

for Aug 31, 1865.

Joined for duty and enrolled:

When Aug 31, 1865.

Where Louisville Ky

Period ..... years

Mustered in:

When Aug 31, 1865.

Where Louisville Ky

Present or absent Present

Stoppage, $.....100 for .....

Due Gov't, $.....100 for .....

Valuation of horse, $.....100

Valuation of horse equipments, $.....100

Remarks: Bounty $100 Paid 33/3

* First current roll. No muster-in roll of this company on file.

Book mark: .....

(3586) Copyist.

1 | 3111 | **U.S.C.T.**

Washington Turner

Pvt., Co. K, 13 Reg't U. S. Col'd Inf'y

Appears on

Company Muster Roll

for May & June, 1865.

Present or absent Present

Stoppage, $ 100 for

Due Gov't, $ 100 for

Valuation of horse, $ 100

Valuation of horse equipments, $ 100

Remarks: Joined Co. 1st Battalion Conv't U.S. Barracks Aug 8 33/3

FROM SECOND AUDITOR'S ROLL.

NEXT ROLL ON FILE MUSTER OUT.

Book mark:

Rogers

(358) *Copyist.*

13 H. Art'y. | U.S.C.T.

Washington Dunnex

Appears with rank of Pvt on

Muster and Descriptive Roll of a Detachment of U. S. Vols. ~~forwarded~~ 3ed

for the 13 Reg't U. S. Col'd H. Art'y. Roll dated

Not dated, , 186 .

Where born Knox Co. Indiana

Age 20 y'rs; occupation Laborer

When enlisted March 30, 1863.

Where enlisted Peoria, Ill.

For what period enlisted 1 years.

Eyes Blk.; hair Blk.

Complexion Yello.; height 5 ft. 7 1/2 in.

When mustered in Mar. 31, 1863.

Where mustered in Peoria, Ill.

Bounty paid $ 33 1/3 100; due $ 100

Where credited 5th Cong. Dist. Ill.

Company to which assigned K

Remarks:

Book mark:

(339) Copyist.

I | **13** H. Art'y. | **U.S.C.T.**

Washington Jones

Pvt., Co. D, 13 Reg't U. S. Col'd H. Art'y.

Appears on **Co. Muster-out Roll,** dated Louisville Ky, June 18, 1865.

Muster-out to date June 18, 1865.

Last paid to June 30, 1865.

Clothing account:

Last settled ....., 186 ; drawn since $ 100

Due soldier $ ..... 100; due U. S. $ 100

Am't for cloth'g in kind or money adv'd $ 25 45/100

Due U. S. for arms, equipments, &c., $ 100

Bounty paid $ 33 1/3 100; due $ 33 1/3 100

Remarks: .....

.....

.....

.....

.....

.....

.....

Book mark: .....

Logan

(361) *Copyist.*

Turner, Washington

, Co. , 13 Reg't U.S.C.T.

2 Enclosures.

Bed Cards	Final Statements
Burial Records	Furloughs or L. of A.
Certs. of Dis. for Discharge	Med. Certificates
C. M. Charges	Med. Des. Lists
Descriptive Lists	Orders
Discharge Certificates	Pris. of War Record
Enlistment Papers 2	Resignations

Other papers relating to—

Admission to Hosp'l	Furlough or L. of A.
Casualty Sheet	Med. Examination
Confinement	Misc. Information
Contracts	Pay or Clothing
Death or Effects	Personal Reports
Desertion	Rank
Discharge from Hosp'l	Transfer to Hosp'l
Discharge from Service	Transfer to V. R. C.
Duty	Transportation

NOTE 1.—This blank will be used for both enlistments and re-enlistments—enlistment of veterans, &c., in the volunteer service. They will be made out in duplicate in all cases—one to accompany the recruiting return of the superintendent (not the recruiting officer) to the Adjutant General, and one to accompany the accounts of the officer who pays bounty, &c. The Regiment and Company in which the soldier last served should be given on the back.

NOTE 2.—An enlistment must, in all cases, precede payment of pay, bounty, pension, &c. A muster-in roll must, in all cases, be filed in the Adjutant General's Office as evidence of muster-in. The mustering officer, commissary, or assistant commissary of musters, as the case may be, will countersign both enlistments as having mustered the soldier into the service of the United States before either of them is given to the disbursing officer.

DECLARATION OF RECRUIT.

I, Washington Turner, desiring to VOLUNTEER as a Soldier in the Army of the United States, for the term of ~~THREE~~ YEARS, Do Declare, That I am twenty years and ..... months of age; that I have never been discharged from the United States service on account of disability or by sentence of a court martial, or by order before the expiration of a term of enlistment; and I know of no impediment to my serving honestly and faithfully as a soldier for three years.

GIVEN at Peoria Ills.

the 30th day of March, 1865

Witness: D. Stevens

Washington Turner
his
mark

No. 9

Washington Turner

Volunteered at Peoria Ills.

on the 30th day of March 1865.

By Capt. L. L. Bryant

12th Regiment of U.S. Col'd Inf'y.

.....enlistment; last served in Company ( ) ..... Reg't of .....

.....

.....

.....

Discharged .....

In Battery " " 1st Regt

U.S. Colored Artillery

Buckner

18 .

CONSENT IN CASE OF MINOR.

I, ... DO CERTIFY, That I am the ..... of .....; that the said ..... is ..... years of age; and I do hereby freely give my CONSENT to his volunteering as a SOLDIER in the ARMY OF THE UNITED STATES for the period of THREE YEARS.

GIVEN at .....

the ..... day of .....

Witness:

.....

.....

(A. G. O. No. 74 & 76.)

VOLUNTEER ENLISTMENT.

STATE OF Illinois TOWN OF Pond

I, Washington Turner born in Knox Co
in the State of Indiana aged Twenty years,
and by occupation a Laborer Do HEREBY ACKNOWLEDGE to have
volunteered this Thirtieth day of March 186 3,
to serve as a **Soldier** in the **Army of the United States of America**, for
the period of ~~THREE~~ *ONE YEAR*, unless sooner discharged by proper authority:
Do also agree to accept such bounty, pay, rations, and clothing, as are, or may be,
established by law for volunteers. And I, Washington Turner do
solemnly swear, that I will bear true faith and allegiance to the ***United States of America***, and that I will serve them honestly and faithfully against all
their enemies or opposers whomsoever; and that I will observe and obey the
orders of the President of the United States, and the orders of the officers
appointed over me, according to the Rules and Articles of War.

Sworn and subscribed to, at Pond, Ills
this 30th day of March 1863,
BEFORE C C Mason
Capt x Pr. Mar. 5th Ill. Vols

Washington X Turner
mark

I CERTIFY, ON HONOR, That I have carefully examined the above-named Volunteer, agreeably to the General Regulations of the Army, and that, in my opinion, he is free from all bodily defects and mental infirmity, which would in any way disqualify him from performing the duties of a soldier.

Robert M Frae

EXAMINING SURGEON.

I CERTIFY, ON HONOR, That I have minutely inspected the Volunteer, Wash'n Turner previously to his enlistment, and that he was entirely sober when enlisted; that, to the best of my judgment and belief, he is of lawful age; and that, in accepting him as duly qualified to perform the duties of an able-bodied soldier, I have strictly observed the Regulations which govern the recruiting service. This soldier has Black eyes, Black hair, Yellow *complexion*. is 5 *feet* 7 1/2 *inches* high.

C C Mason
Capt ~~Regiment of~~ Pr. Mar. 5th Ills ~~Volunteers~~,
RECRUITING OFFICER

(A. G. O. No. 74 & 76.)

Mustered into the service of the United States, for ~~three~~ one year or during the war, from date of enlistment, in "Battery" Company, "Regiment of Volunteers, on the 30th day of March, 1863, at Pond Ills.

C C Mason
Capt Co. Pr. Mar.
Mustering Officer

DECLARATION OF RECRUIT.

I, Washington Turner desiring to VOLUNTEER as a Soldier in the Army of the United States, for the term of ~~THREE~~ one YEAR~~S~~, Do Declare, That I am Twenty years and ..... months of age; that I have never been discharged from the United States service on account of disability or by sentence of a court martial, or by order before the expiration of a term of enlistment; and I know of no impediment to my serving honestly and faithfully as a soldier for ~~three~~ one year~~s~~.

GIVEN at Peoria, Ills.

the 30th day of March, 1865

Witness: D. Lucas

Washington ~~X~~ Turner
mark

No. .....

Washington Turner

Volunteered at Peoria, Ills.

March 30th 1863

By Capt. C. C. Mason

Pr. ~~Regiment of~~ Marshall, 5 Vis. Ills.

..... enlistment; last served in Company ( )

..... Reg't of .....

Discharged ..... 18 .

In "13th" ~~U.S.~~ Regiment

U.S. Cold Artillery

Balin

Received from 2nd. Aud. Jan. 13 1863

CONSENT IN CASE OF MINOR.

I, ... DO CERTIFY, That I am the ..... of .....; that the said ..... is ..... years of age; and I do hereby freely give my CONSENT to his volunteering as a SOLDIER in the ARMY OF THE UNITED STATES for the period of THREE YEARS.

GIVEN at .....

the ..... day of .....

Witness:

.....

.....

(A. G. O. No. 74 & 76.)

NOTE 1.—This blank will be used for both enlistments and re-enlistments—enlistment of veterans, &c., &c., in the volunteer service. They will be made out in duplicate in all cases—one to accompany the recruiting return of the superintendent (not the recruiting officer) to the Adjutant General, and one to accompany the accounts of the officer who pays bounty, &c. The Regiment and Company in which the soldier last served should be given on the back.

NOTE 2.—An enlistment holds to service. A muster-in must, in all cases, precede payment of pay, bounty, pension, &c. A muster-in roll must, in all cases, be filed in the Adjutant General's Office as evidence of muster-in. The mustering officer, commissary, or assistant commissary of musters, as the case may be, will countersign both enlistments as having mustered the soldier into the service of the United States before either of them is given to the disbursing officer.

VOLUNTEER ENLISTMENT.

STATE OF Illinois TOWN OF Peoria

I, Washington Turner born in Knox Co
in the State of Indiana aged Twenty five years,
and by occupation a Laborer Do HEREBY ACKNOWLEDGE to have
volunteered this Thirtieth day of March 1865,
to serve as a ~~Soldier~~ one in the ~~Army of the United States of America~~, for
the period of ~~THREE~~ ONE YEAR, unless sooner discharged by proper authority:
Do also agree to accept such bounty, pay, rations, and clothing, as are, or may be,
established by law for volunteers. And I Washington Turner do
solemnly swear, that I will bear true faith and allegiance to the ***United States of America,*** and that I will serve them honestly and faithfully against all
their enemies or opposers whomsoever; and that I will observe and obey the
orders of the President of the United States, and the orders of the officers
appointed over me, according to the Rules and Articles of War.

Sworn and subscribed to, at Peoria Ills
this 30th day of March 1865,
BEFORE C C Mason
Capt 5th Regt Inf. 5th Dist Ills.

his
Washington X Turner
mark

I CERTIFY, ON HONOR, That I have carefully examined the above-named Volunteer, agreeably to the General Regulations of the Army, and that, in my opinion, he is free from all bodily defects and mental infirmity, which would in any way disqualify him from performing the duties of a soldier.

Robert Boal
EXAMINING SURGEON.

I CERTIFY, ON HONOR, That I have minutely inspected the Volunteer Washton Turner previously to his enlistment, and that he was entirely sober when enlisted; that, to the best of my judgment and belief, he is of lawful age; and that, in accepting him as duly qualified to perform the duties of an able-bodied soldier, I have strictly observed the Regulations which govern the recruiting service. This soldier has Black *eyes*, Black *hair*, Yellow *complexion*, is 5 *feet* 7 1/2 *inches* high.

C C Mason
Capt 5th Regiment of Dist 5th Ills Volunteers
RECRUITING OFFICER

(A. G. O. No. 74 & 76.)

Mustered into the service of the United States, for ~~three~~ one years or during the war, from date of enlistment, in Battery "A" Regiment Company of 2d Regt Colt Artillery Volunteers, on the 30th day of March, 1865, at Peoria Ills.

C C Mason
Capt 5th Dist Ills.
Mustering Officer

Turner, William 2172

Co C, 13 U.S.Col'd H. Art'y.

Enlisted	Enlisted

CARD NUMBERS.

1	5-5-15-8-7-6	26	
2	5-5-16-9-2-3	27	
3	5-5-21-5-5-7	28	
4	5-5-21-7-3-2	29	
5	5-5-22-0-5-8	30	
6	9-12-8-4-16	31	
7		32	
8		33	
9		34	
10		35	
11		36	
12		37	
13		38	
14		39	
15		40	
16		41	
17		42	
18		43	
19		44	
20		45	
21		46	
22		47	
23		48	
24		49	
25		50	

Book Mark:

See also

D | 13 H. Art'y. | U.S.C.T.

William Sumner

....., Co. C, 13 Reg't U. S. Col'd H. Art'y.

Appears on

Company Descriptive Book

of the organization named above.

DESCRIPTION.

Age 43 years; height 5 feet 7 inches.

Complexion Black

Eyes Black; hair Black

Where born Kentucky

Occupation Colour

ENLISTMENT.

When Feb 14, 1863.

Where Cadiz Ky

By whom Capt Moxam; term ..... y'rs.

Remarks: Died in Hospital at Smithland Ky March 13th 1863, by reason of Small Pox

Deadrick

(383*g*) **Copyist.**

F | 13 H. Art'y. | U.S.C.T.

Williams Turner

Appears with rank of Pvt on

Muster and Descriptive Roll of a Detachment of U. S. Vols. forwarded

for the 13 Reg't U. S. Col'd H. Art'y. Roll dated

Paducah Ky, Feb. 27, 1865.

Where born Kentucky

Age 45 y'rs; occupation Laborer

When enlisted Feb. 14, 1865.

Where enlisted Paducah, Ky

For what period enlisted 3 years.

Eyes Black; hair Black

Complexion Black; height 5 ft. 7 in.

When mustered in Feb. 14, 1865.

Where mustered in Paducah, Ky

Bounty paid $ 100; due $ 100

Where credited Christian Co. 2d Dist of Ky

Company to which assigned B

Remarks:

Book mark:

Hammer

(339) Copyist.

I | 13 H. Art'y. | U.S.C.T.

William Turner

Pvt., Co. C, 13 Reg't U. S. Col'd H. Art'y.

Age ..... years.

Appears on

Company Muster Roll*

for to Apr 30, 1865.

Joined for duty and enrolled:

When Feb 1, 1865.

Where Paducah Ky

Period 3 years

Mustered in:

When Feb 1, 1865.

Where Paducah Ky

Present or absent.....

Stoppage, $.....100 for .....

Due Gov't, $.....100 for.....

Valuation of horse, $.....100

Valuation of horse equipments, $.....100

Remarks: Died Mch 13/65 at Smith-
land Ky Final Sta. Ford.

* First current roll. No muster-in roll of this company on file.

Book mark: .....

Van Houten.

(3586) Copyist.

I | 13 H. Art'y. | U.S.C.T.

William Turner

Appears with rank of Pvt on

Muster and Descriptive Roll of a Detachment of U. S. Vols. ~~forwarded~~ Organized

for the 13 Reg't U. S. Col'd H. Art'y. Roll dated

Camp Nelson, Ky, June 23 1865.

Where born Kentucky

Age 45 y'rs; occupation Laborer

When enlisted Feb 14, 1865.

Where enlisted Paducah, Ky,

For what period enlisted 3 years.

Eyes Black; hair Black

Complexion Black; height 5 ft. 7 in.

When mustered in Feb 14, 1865.

Where mustered in Paducah, Ky,

Bounty paid $ None 100; due $ 100

Where credited 2 Reg. Dist. Ky

Company to which assigned C.S.

Remarks: Died Mch 13th 1865=
Final Statements forwarded

Book mark:

D Taylor

(339) *Copyist.*

I 13th Maty | U.S.C.T.

William Turner

Pvt., Co. C, 13 Reg't U. S. Col'd Maty

Appears on

Company Muster Roll

for May & June, 1865.

Present or absent.....

Stoppage, $.....100 for .....

.....

Due Gov't, $.....100 for .....

.....

Valuation of horse, $.....100

Valuation of horse equipments, $.....100

Remarks: Died

FROM SECOND AUDITOR'S ROLL.

Book mark: Died Mch 12/65 of small pox

(over)

Vauthuin.

(358) *Copyist.*

JAN. 16 1891 ☆ 5521732 ☆

Pay for 29 days at $16.
per month is $15.46.
Bounty $100. Dr. Cr. $36,41
= $279.05 Paid by Ck.
592518 Oct. 1, 1892.

G | 13 Maty | **U.S.C.T.**

William Garner

Pt., Co. G, 13 Reg't U. S. Col'd Inf'y

Appears on **Co. Muster-out Roll,** dated

Louisville Ky, Nov 18, 1865.

Muster-out to date ....., 186 .

Last paid to ....., 186 .

Pay due from enlistment

Clothing account:

Last settled....., 186 ; drawn since $.....100

Due soldier $.....100; due U. S. $.....100

Am't for cloth'g in kind or money adv'd $.....100

Due U. S. for arms, equipments, &c., $.....100

Bounty paid $.....100; due $.....100

Remarks: Died Post Hospl.
Louisville Ky Mch 13/65.
Small pox

Book mark: V 125 P 192, 71,
V. 32 P 143 - 75.

Hauptmann

(361) *Copyist.*

Turner. Wm

P, Co. C, 13 U.S.C.H.A. Reg't

3 Enclosures.

Bed Cards	Descriptive Lists
Burial Records	Final Statements 1
Certs. of Dis. for Discharge	Furloughs
C. M. Charges	Med. Des. Lists
Med. Certificates	Orders

Enlistments 1

Other papers relating to—

Admission to Hosp'l	Furlough
Casualty Sheet (Officer's)	Med. Examination
Confinement	Misc. Information
Contracts	Pay or Clothing
Death or Effects 1	Personal Reports
Desertions	Rank
Discharge from Hosp'l	Transfer to Hosp'l
Discharge from Service	Transfer to V. R. C.
Duty	Transportation

NOTE 1.—This blank will be used for enlistments of United States colored troops. They will be made out in duplicate in all cases—one to accompany the recruiting return of the superintendent (not the recruiting officer) to the Adjutant General, and one to accompany the accounts of the officer who pays bounty, &c.

NOTE 2.—An enlistment holds to service. A muster-in must, in all cases, precede payment of pay, bounty, pension, &c. A muster-in roll, must in all cases, be filed in the Adjutant General's Office as evidence of muster-in. The mustering officer, commissary, or assistant commissary of musters, as the case may be, will countersign both enlistments as having mustered the soldiers into the service of the United States before either of them is given to the disbursing officer.

DECLARATION OF RECRUIT.

I, ... desiring to volunteer as a soldier in the ARMY OF THE UNITED STATES, for the term of *Three Years*, DO DECLARE That I am..... years and ..... months of age; that I have never been discharged from the United States service on account of disability or by sentence of a court-martial, or by order before the expiration of a term of enlistment; and I know of no impediment to my serving honestly and faithfully as a soldier for three years.

GIVEN at ..... the ..... day of .....

Witness:

.....

Consent of Parent or Guardian in case of a Minor, if a Free Man, or in the case of a Slave, of the Person to whom he owes Service:

I, ... Do CERTIFY, That I am the ..... that the said ..... is ..... years of age; and I do freely give my CONSENT to his volunteering as a SOLDIER in the Army of the United States, for the period of THREE YEARS, under the conditions of the laws of the United States.

GIVEN at ..... the ..... day of .....

Witness:

.....

.....

(A. G. O. No. 74 & 76.)

UNITED STATES COLORED TROOPS ENLISTMENT.

STATE OF Kentucky

TOWN OF accredited to Christian Co 2nd Dist Ky

I, William Turner born in .....

in the State of Kentucky aged Forty five years

and by occupation a Laborer Do HEREBY ACKNOWLEDGE to

have volunteered Fourteenth day of July 1863,

to serve as a **Soldier** in the **Army of the United States of America,** for the period of THREE YEARS, unless sooner discharged by proper authority: Do also agree to accept such bounty, pay, rations, and clothing, as are, or may be, established by law for the U. S. colored troops.

And I, William Turner of Christian Co Ky do solemnly swear that I will bear true faith and allegiance to the **United States of America,** and that I will serve them honestly and faithfully against all their enemies or opposers whomsoever; and that I will observe and obey the orders of the President of the United States, and the orders of the officers appointed over me, according to the Rules and Articles of War.

Sworn and subscribed to, at Paducah Ky

this 14th day of July 1863

Before J H Morgan Capt & A A C M Dist Ky

his
William X Turner
mark

I CERTIFY, ON HONOR, That I have carefully examined the above named Volunteer agreeably to the General Regulations of the Army, and that, in my opinion, he is free from all bodily defects and mental infirmity, which would in any way disqualify him from performing the duties of a soldier.

I M Best

EXAMINING SURGEON.

I CERTIFY, ON HONOR, That I have minutely inspected the Volunteer, William Turner previously to his enlistment, and that he was entirely sober when enlisted; that, to the best of my judgment and belief, he is of lawful age; and that, in accepting him as duly qualified to perform the duties of an able-bodied soldier, I have strictly observed the regulations which govern the recruiting service. This soldier has Blue *eyes*, Blue *hair*, Blue *complexion*, is 5 *feet* 7 *inches* high.

.....

RECRUITING OFFICER OR AGENT.

Mustered into the United States Service 14 day of July 1863.

Jno H Morgan
Capt & A A C M Dist Ky
Mustering Officer.

Mustered into the service of the United States, for three years or during the war, from date of enlistment, in Company ..... of the 2nd Regiment of U S Colored Volunteers, on the 14 day of July, 1863, at Paducah Ky

Wm Turner
Enlisted
Wm Turner
Recruiting Officer
Wm Turner
Mustering Officer

Extract from Act of Congress.

SEC. 12. *And be it further enacted*, That the fees of agents and attorneys for making out and causing to be executed the papers necessary to establish a claim for a pension, bounty, and other allowance before the Pension Office, under this act, shall not exceed the following rates: For making out and causing to be duly executed a declaration by the applicant, with the necessary affidavits, and forwarding the same to the Pension Office, with the requisite correspondence, ten dollars; which sum shall be received by such agent or attorney in full for all services in obtaining such pension, and shall not be demanded or received, in whole or in part, until such pension shall be obtained; and the sixth and seventh sections of an act entitled "An act to grant pensions," approved July [fourteenth,] eighteen hundred and sixty-two, are hereby repealed.

SEC. 13. *And be it further enacted*, That any agent or attorney who shall, directly or indirectly, demand or receive any greater compensation for his services under this act than is prescribed in the preceding section of this act, or who shall contract or agree to prosecute any claim for a pension, bounty, or other allowance under this act, on the condition that he shall receive a per centum upon any portion of the amount of such claim, or who shall wrongfully withhold from a pensioner or other claimant the whole or any part of the pension or claim allowed and due to such pensioner or claimant, shall be deemed guilty of a high misdemeanor, and, upon conviction thereof, shall, for every such offense, be fined not exceeding three hundred dollars, or imprisoned at hard labor not exceeding two years, or both, according to the circumstances and aggravations of the offense.

Approved July 4, 1864.

NOTE 10.—If any soldier is charged a higher fee than that allowed by the above act, he should report the fact and the name of the agent to the Adjutant General, in order that steps may be taken to have the same refunded.

ADJUTANT GENERAL'S OFFICE.
March 23" 1865.
Duplicate with Inventory sent 2d Auditor.

FINAL STATEMENT

OF

Private William Turner Co C
13 Reg't of Mass Artillery

VOLUNTEERS.

Died March 13" 1865

NOTE 1.—*Two* of these certificates (or duplicates) are to be given to each Volunteer Soldier or drafted man who may be discharged without being mustered out, (Final Statements are never given to men mustered out of service,) that he may at once receive from the Paymaster the pay, &c., due him, and the captain or other COMMISSIONED officer commanding the company will certify to the act of the delivery of the duplicate certificates; with these certificates the Soldier is "entitled to" his *discharge*, and should also present his discharge to the Paymaster to have the payment endorsed on it. The discharge is to be given back to the Soldier by the Paymaster; the latter only retaining as his vouchers the duplicate certificates.

NOTE 2.—If the Soldier is entitled to pay for the use of his horse, the Company Commander will certify to that fact on the back of both these final statements, and also to the time he has pay due for having been so mounted on his own horse.

NOTE 3.—When a Soldier is furnished with final statements, his descriptive list, if he has one, should be taken up by the officer who gives the Soldier these statements, and endorsed with a statement to this effect by the officer. The endorsement should exhibit a full statement of the time for which the Soldier was allowed pay on his final statements, the clothing account, and all other charges against him or in his favor, so as to comprise a complete exhibit of his account. It will then be transmitted to the Company Commander of the Soldier, who will enter all the data necessary to a full understanding of the Soldier's account on the muster roll upon which the Soldier's discharge is reported. The descriptive list will then be destroyed. The object of this is, that the remaining portion of the Soldier's account may be settled upon the receipt of these muster rolls, and the Soldier receive any pay or allowances that may be due him at the time of his discharge, and which may not appear on his last final statements from the fact that his descriptive list is incomplete. These accounts for back pay, &c., are settled by the 2d Auditor of the Treasury Department.

NOTE 4.—Charges for loss or injury to ordnance, horse equipments, and other miscellaneous charges, should appear under the heading of "Other Stoppages."

NOTE 5.—Bounty paid by State authorities, and not by the United States, will not be entered on this statement.

NOTE 6.—Amounts due the Sutler and Laundress must be entered on the muster roll on which the discharge, death, desertion, &c., is reported, as well as on the final statement, otherwise the amount cannot be collected from the United States.

NOTE 7.—This blank will be used for deceased volunteers and drafted men, as well as for others.

NOTE 8.—Where a Soldier dies in Hospital or on detached service, his descriptive list, if he has one, should be sent with his final statements, in duplicate, to the Adjutant General, Washington, D. C.

NOTE 9.—If the soldier is a drafted man or substitute, the space for time, &c., of enrolled, should contain only the word *drafted* or *substitute*, as the case may be. If the Soldier is a "VETERAN," (or RECRUIT,) the words *as a veteran*, (or *recruit*,) as the case may be, should be interlined after the words *mustered into the service of the U. S.* A statement of all the installments of *Veteran* or *Recruit Bounty* RECEIVED by the Soldier must be made on the back of each final statement.

I certify, on honor, that William Turner, a Private of Captain Wm Botinnis Company (C) of the 13 Regiment of U.S. Colored Artillery (Hvy) VOLUNTEERS, of the State of _____, born in _____, State of Kentucky, aged 45 years; 5 feet 7 inches high; Black complexion, Black eyes, Black hair, and by occupation a Laborer, who joined for service and was enrolled (see Note 9) on the 14th day of February, 1865, at Paducah Ky by Capt J.H. Morgan, Pro Mar 1st Dist Ky for the period of Three years, and mustered into the service of the United States on the 14th day of February, 1865, at Paducah Ky, by Capt J.H. Morgan Pro Mar 1st Dist Ky and having served HONESTLY and FAITHFULLY with his Company to the present date, is now entitled to a DISCHARGE by reason of Death. He died in Post Hospital at Smithland Kentucky, on The 13th day of March 1865, by reason of Small Pox.

The said Private William Turner ~~was last paid by Paymaster~~ ~~to include the~~ Enlistment ~~day of~~ _____, ~~186 , and~~ has pay due him from ~~that time~~ to the present date; he is entitled to pay and subsistence for TRAVELING to place of enrollment, and whatever other allowances are authorized to volunteer soldiers, drafted men, or militia, so discharged. He has received from the United States CLOTHING amounting to forty one 75/100 dollars, since the 14th day of February, 1865, when ~~his clothing account was last settled~~ I Enlisted. He has received from the United States 0 00/100 dollars advanced BOUNTY.

There is to be stopped from him, on account of the State of _____, or other authorities, for CLOTHING, &c., received on entering service, _____ 00/100 dollars; and for other stoppages, viz: _____

_____ 00/100 dollars.

He has been furnished with TRANSPORTATION in kind from the place of his discharge to _____; and he has been SUBSISTED for TRAVELING to his place of enrollment, up to the _____, 186 .

He is indebted to _____, SUTLER, _____ 00/100 dollars.

He is indebted to _____, LAUNDRESS, _____ 00/100 dollars.

Given in Duplicate, at Smithland Kentucky, this 13th day of March, 1865.

Wm Botinnis
Capt 13th U.S. Colrd
Commanding Company.

[A G O No. 85—First.]

ARTICLES OF WAR.

ART. 95. When any non-commissioned officer or soldier shall die, or be killed in the service of the United States, the then commanding officer of the troop or company shall, in the presence of two other commissioned officers, take an account of what effects he died possessed of, above his arms and accoutrements, and transmit the same to the office of the Department of War, which said effects are to be accounted for, and paid to the representatives of such deceased non-commissioned officer or soldier. And in case any of the officers, so authorized to take care of the effects of deceased officers and soldiers, should, before they have accounted to their representatives for the same, have occasion to leave the regiment or post, by preferment or otherwise, they shall, before they be permitted to quit the same, deposit in the hands of the commanding officer, or of the assistant military agent, all the effects of such deceased non-commissioned officers and soldiers, in order that the same may be secured for, and paid to, their respective representatives.

ARMY REGULATIONS—EDITION OF 1861.

DECEASED SOLDIERS.

Par. 152. Inventories of the effects of deceased non-commissioned officers and soldiers, required by the 95th Article of War, will be forwarded to the Adjutant General, by the commander of the company to which the deceased belonged, and a duplicate of the same to the colonel of the regiment. Final statements of pay, clothing, &c., will be sent with the inventories. When a soldier dies at a post or station absent from his company, it will be the duty of his immediate commander to furnish the required inventory, and, at the same time, to forward to the commanding officer of the company to which the soldier belonged, a report of his death, specifying the date, place, and cause; to what time he was last paid, and the money or other effects in his possession at the time of his decease; which report will be noted on the next muster roll of the company to which the man belonged. Each inventory will be endorsed, "Inventory of the effects of ——— ———, late of company (—) ——— regiment of ———, who died at ———, the——— day of ———, 186–." If a legal representative receive the effects, it will be stated in the report. If the soldier leave no effects, the fact will be reported.

Par. 153. Should the effects of a deceased non-commissioned officer or soldier not be administered upon within a short period after his decease, they shall be disposed of by a Council of Administration, under the authority of the commanding officer of the post, and the proceeds deposited with the Paymaster, to the credit of the United States, until they shall be claimed by the legal representatives of the deceased.

Par. 154. In all such cases of sales by the Council of Administration, a statement in detail, or account of the proceeds, duly certified by the Council and commanding officer, accompanied by the Paymaster's receipt for the proceeds, will be forwarded by the commanding officer to the Adjutant General. The statement will be endorsed, "Report of the proceeds of the effects of ——— ———, late of company (—) ——— regiment of ———, who died at ———, the —— day of ———, 186–."

NOTE 1.—The effects in all cases, when called for, should be turned over to the legal representative, without further authority from the Adjutant General. When the effects are turned over to the relatives of the deceased before these inventories are sent to the Adjutant General, their receipts therefor should be attached to the inventories. In all other cases, one copy will be sent with a letter of transmittal direct to the Adjutant General, and a duplicate retained by the officer.

NOTE 2.—Particular care should be taken to take receipts in duplicate from the Paymaster for any funds turned over to him; one copy should be sent direct to the Adjutant General and one retained by the officer.

INVENTORY OF THE EFFECTS

OF

Private William Turner

Late of Company "C"

13 Reg't of Ms Artillery

Volunteers, who died at Smithland Ky

on the 13th day of March 1865.

Jul 17 1871 (1st Genl)

Inventory of the effects of William Turner late a Private of Captain Wm Bolinus Company "C" of the 13th Regiment of U.S. Colored Artillery Vols Volunteers, who was enrolled as a Private at Paducah in the State of Kentucky on the 14th day of February 1865, and mustered into the service of the United States as a Private on the 14th day of February 1865, at Paducah Ky in Company ....., 13th Regiment of U.S. Colored Art'y Vols Volunteers, to serve 3 years or during the war; he was born in ..... in the State of Kentucky; he was 43 years of age, 5 feet 7 inches high, Black complexion, Black eyes, Black hair, and by occupation, when enrolled, a Laborer; he died in Post Hospital, at Smithland Kentucky on the 13th day of March 1865, by reason of Small Pox

INVENTORY.

Articles.	No.	Articles.	No.	Articles.	No.
Hats		Pairs trowsers		Knapsacks	
Caps		Pairs flannel drawers			
Forage caps		Pairs cotton drawers			
Great coats		Flannel shirts			
Uniform coats		Cotton shirts			
Uniform jackets		Pairs boots			
Flannel sack coats		Pairs shoes			
Blouses		Pairs socks			
Stable frocks	No Effects	Blankets			
Fatigue overalls		Haversacks			

Money.		
	Specie	$
	Notes	$

I CERTIFY, ON HONOR, that the above inventory comprises all the effects of Private William Turner, deceased, and that the effects ~~are in the hands of~~ were burned by order at ~~of~~ of Surgeon in charge of Post Hospital ~~to be disposed of by a Council of Administration.~~ at Smithland Kentucky

(DUPLICATES.)

Wm Bolinus
Capt. 13th U.S.C.H.A.
Commanding the Company.

STATION: Smithland Ky.

DATE: March 13th 1865

[A. G. O. No. 104.]

2123

Turner, Jackanah

Co F, 13 U.S.Col'd H.Art'y.

Inmate	Inmate

CARD NUMBERS.

1	5 5 1 7 3 6 9	26	
2	5 5 1 5 0 6 4	27	
3	5 5 2 3 1 5 5	28	
4	5 5 2 3 3 1 2	29	
5	9 1 2 8 9 1 2	30	
6	2 6 8 6 0 3 3 9	31	
7		32	
8		33	
9		34	
10		35	
11		36	
12		37	
13		38	
14		39	
15		40	
16		41	
17		42	
18		43	
19		44	
20		45	
21		46	
22		47	
23		48	
24		49	
25		50	

Book Mark:

See also

F | **13** H. Art'y. | **U.S.C.T.**

Jaufarian Turner

....., Co. F, 13 Reg't U. S. Col'd H. Art'y.

Appears on

Company Descriptive Book

of the organization named above.

DESCRIPTION.

Age 27 years; height 5 feet 8½ inches.

Complexion Blk

Eyes Blk; hair Blk

Where born South Carolina

Occupation Laborer

ENLISTMENT.

When Apr 11, 1863.

Where Olney, Ill.

By whom Capt Scott; term 1 y'rs.

Remarks:

O Beck

(383*g*) **Copyist.**

I. V. H. Arty. U. S. C. T.

Zacariah Turner

Appears with rank of Sergt. on

Muster and Descriptive Roll of a Detachment of Drafted Men and Substitutes forwarded

for the 12 Reg't U.S. C. H. Arty. Roll dated

Olney Ill. Apr. 12, 1865.

Where born S. Ca.

Age 37 y'rs; occupation Laborer.

Drafted and mustered in:

When Apr. 11, 186 .

Where Olney Ill.

Period 1 years.

Eyes black; hair black

Complexion black; height 5 ft. 7 in.

Paid bounty and advance pay, $ 100

Bounty due $ 100

Where credited Town of R. 2. S. D. 136. Jefferson Co. Eleventh Dist. Ill.

Company to which assigned

Remarks: Substitute for Joseph Sears, drafted Mar. 25.

Book mark:

P. Carlin

(340) *Copyist.*

I | 13 Artly | **U.S.C.T**

Joachim Turner

Appears with rank of Private on

Muster and Descriptive Roll of a Detachment of Drafted Men and Substitutes forwarded

for the 13 Reg't U.S. Col'd Artly Roll dated

Camp Butler, Ill, Apr 28, 1865

Where born S. Carolina

Age 37 years; occupation Laborer

Drafted and mustered in:

When Apr 11, 1865.

Where Olney

Period 1 years.

Eyes Blk; hair Blk

Complexion Blk; height 5 ft. 7 in.

Paid bounty and advance pay, $ 100

Bounty due $ 100

Where credited T 1, R 2, 11 Cong 136 Sub D. Ill

Company to which assigned

Remarks:

Book mark:

W. S. Thompson
Capt Mil.

1 | 13th Ky U.S.V.

Zachriah Turner

Appears with rank of Pvt on

Muster and Descriptive Roll of a Detachment of U. S. Vols. ~~forwarded~~ Enlisted

for the 13 Reg't U.S. Col'd H. Arty Roll dated

Camp Nelson, Ky, June 23 1865.

Where born South Carolina

Age 35 y'rs; occupation Laborer

When enlisted Apr. 11, 1865.

Where enlisted Olney, Ill.

For what period enlisted 1 years.

Eyes Blk; hair Blk

Complexion Blk; height 5' ft 5½ in.

When mustered in Apr. 11, 1865.

Where mustered in Olney

Bounty paid ~~$33 1/3~~ 100; due $ 100

Where credited 11 108th Ill.

Company to which assigned I

Remarks:

x Absent unpaid

Book mark:

E B Taylor

(339) Copyist.

9 | 13 H. Art'y. | U.S.C.T.

Zachariah Turner

Pvt., Co. D, 13 Reg't U. S. Col'd H. Art'y.

Age ..... years.

Appears on

Company Muster Roll*

for * June 30, 1865.

Joined for duty and enrolled:

When Apl 11, 1865.

Where Olney Ill.

Period 1 years

Mustered in:

When Apl 11, 1865.

Where Olney Ill.

Present or absent Present

Stoppage, $ 100 for .....

Due Gov't, $ 100 for .....

Valuation of horse, $ 100

Valuation of horse equipments, $ 100

Remarks: .....

NEXT ROLL ON FILE MUSTER OUT.

* First current roll. No muster-in roll of this company on file.

Book mark: .....

(3586) Copyist.

D | **13 H. Art'y.** | **U.S.C.T.**

Zachariah Turner

Pvt, Co. D, 13 Reg't U. S. Col'd H. Art'y.

Appears on **Co. Muster-out Roll,** dated Louisville Ky, Nov 1, 1865.

Muster-out to date Nov 1, 1865.

Last paid to June 30, 1865.

Clothing account:

Last settled ....., 186 ; drawn since $ 100

Due soldier $ ..... 100; due U. S. $ 30 18/100

Am't for cloth'g in kind or money adv'd $ 100

Due U. S. for arms, equipments, &c., $ 100

Bounty paid $ ..... 100; due $ 100

Remarks: Due from the U.S. $70.00 as per Check Book. Due the U.S. for one Coat

Book mark: .....

Linden

(361) *Copyist.*

2124

Tyler. Columbus.

Co a, 13 U.S.Col'd H. Art'y.

Private	Private

CARD NUMBERS.

1	5-5-16s-69	26	
2	5-5-19840	27	
3	5-5-19972	28	
4	5-5-2016-8	29	
5	5-5-195-5-5-	30	
6	5-5-19s-63	31	
I	5-5-20632	32	
8	9128058	33	
9	43136003	34	
10		35	
11		36	
12		37	
13		38	
14		39	
15		40	
16		41	
17		42	
18		43	
19		44	
20		45	
21		46	
22		47	
23		48	
24		49	
25		50	

Book Mark:

See also

I | 13 H. Art'y. | U.S.C.T.

Columbus Tyler

....., Co. A, 13 Reg't U.S. Col'd H. Art'y.

Appears on

Company Descriptive Book

of the organization named above.

DESCRIPTION.

Age 25 years; height 5 feet 6½ inches.

Complexion Black

Eyes Blk; hair Blk

Where born Shelby Co Kentucky

Occupation Farmer

ENLISTMENT.

When Oct 16, 1864.

Where Bowling Green

By whom Capt Potter; term 3 y'rs.

Remarks: Deserted as Ed Smith
Ky March 14th 1863 while
on recruiting Service

Deadrick

(383o) Copyist.

F | 13 H. Art'y. | U.S.C.T.

Columbus Taylor

Pvt., Co. A, 13 Reg't U. S. Col'd H. Art'y.

Age ..... years.

Appears on

Company Muster Roll*

for Dec 31, 1864.

Joined for duty and enrolled:

When Oct. 16, 1864.

Where Bowling Green, Ky.

Period 3 years

Mustered in:

When Oct. 16, 1864.

Where Bowling Green, Ky.

Present or absent Present

Stoppage, $ 100 for .....

Due Gov't, $ 100 for .....

Valuation of horse, $ 100

Valuation of horse equipments, $ 100

Remarks: .....

* First current roll. No muster-in roll of this company on file.

Book mark: .....

W. D. Hughes

(3586) Copyist.

T | 13 H A. | U.S.C.T.

Columbus Tyler

Appears with rank of Pvt on

Muster and Descriptive Roll

of a Detachment of U.S. Colored recruits fowarded for 13 Regt U.S. Colored H Arty. Roll dated Bowling Green, Ky, Oct 31, 1864.

Where born Shelby Co Ky

Age 25 years; occupation Farmer

When enlisted Oct 17, 1864.

Where enlisted B. Green Ky.

For what period enlisted 3 years.

Eyes blk; hair blk

Complexion blk; height 5 ft. 6 1/2 in.

When mustered in , 186 .

Where mustered in

Bounty paid $ 100; due $ 100

Clothing account:

Last settled , 186 ; drawn since $ 8 30/100

Date of first muster Oct 10, 1864.

Company to which assigned

Remarks: New recruit

Trigg Co. owed Service

to John Tyler

Book mark :

G. L. Parr

(356m) Copyist.

I	13 H. Art'y.	U.S.C.T.

Columbus Taylor

Asst, Co. A, 13 Reg't U. S. Col'd H. Art'y.

Appears on

Company Muster Roll

for Jan & Feb, 186 5.

Present or absent Present

Stoppage, $ 100 for

Due Gov't, $ 100 for

Valuation of horse, $ 100

Valuation of horse equipments, $ 100

Remarks:

Due $40 first installment of Gov. Bounty

Book mark:

W. J. Hughes

Copyist.

G | 13 H. Art'y. | U.S.C.T.

Columbus Taylor
Pvt., Co. A, 13 Reg't U. S. Col'd H. Art'y.

Appears on

Company Muster Roll

for March & Apr, 186 5.

Present or absent

Stoppage, $ 100 for

Due Gov't, $ 100 for

Valuation of horse, $ 100

Valuation of horse equipments, $ 100

Remarks:
Deserted at Coldspring Ky
March 14/65 while on
detached Service recruiting,
taking with him a Complete
Set of Arms & accoutrements
& C & L Equipments

Book mark:

V. G. Hughes
Copyist.

P | 13 Wisty | U.S.C.T.

Columbus Taylor

Pvt, Co. A, 13 Reg't U. S. Col'd Wisty.

Appears on

Descriptive List of Deserters

dated March 31, 1865.

Deserted:

When March 14, 1865.

Where Eddyville Ky

Arrested:

When ....., 186 .

Where .....

Remarks: Discharged

$13.46 Camp Dick 9 60

Book mark: .....

C. Stewart

(351) Copyist.

C 137 Ky U.S.C.T.

Columbus Ky

Pvt, Co. A, 13 Reg't U. S. Col'd Inf'y

Appears on

Descriptive List of Deserters

dated March 31, 1865.

Deserted:

When March 14, 1865.

Where Eddyville Ky

Arrested:

When ....., 186 .

Where .....

Remarks: Deserted while detached Recruiting Service at Eddyville Ky Pr ll S. / Rifle Musket Belgian 69 Cal and full suit accouterments $13.46 1 full Suit C & G Equipage $ 9.60

Book mark: .....

R Stewart

(851) Copyist.

F 1/3 H Arty | **U.S.C.T.**

Columbus Taylor

Appears with rank of Pvt. on

Muster and Descriptive Rolls of Detachments of U. S. Vols. ~~forwarded~~ organized as

Co. A, for the 13 Reg't U. S. Col'd H. Arty, Roll dated

Camp Nelson Ky. June 23, 1865.

Where born Shelby. Ky.

Age 23 **y'rs; occupation** Farmer

When enlisted Oct. 16, **186** 4.

Where enlisted B. Green Ky.

For what period enlisted 3 **years.**

Eyes Blk; **hair** Blk

Complexion Blk; **height** 5 **ft.** 6 1/2 **in.**

When mustered in Oct. 16, **186** 4

Where mustered in B. Green Ky.

Bounty paid $ 100; **due $** 100

Where credited

Company to which assigned A

Remarks: Deserted at Eddyville, Ky. Mar. 14/65. While on recruiting Service.

Book mark: F 1962 Ky.

Wagner

(339) **Copyist.**

I | 13 H. Art'y. | U.S.C.T.

Columbus Taylor

Pvt, Co. A, 13 Reg't U. S. Col'd H. Art'y.

Appears on **Co. Muster-out Roll,** dated Louisville Ky, Aug 8, 186 5.

Muster-out to date ....., 186 .

Last paid to Pay due from Enlistment, 186 .

Clothing account:

Last settled ....., 186 ; drawn since $ 100

Due soldier $ ..... 100 ; due U. S. $ 100

Am't for cloth'g in kind or money adv'd $ 100

Due U. S. for arms, equipments, &c., $ 100

Bounty paid $ ..... 100 ; due $ 100

Remarks: Deserted at Eddyville Ky March 14, 65 while on recruiting Service

Book mark :

W. T. Hughes

(361) *Copyist.*

Tyler. Columbus

, Co. A, 13 U.S. C.T. A.

Enclosures.

Bed Cards	Descriptive Lists
Burial Records	Final Statements
Certs. of Dis. for Discharge	Furloughs
C. M. Charges	Med. Des. Lists
Med. Certificates	Orders

Other papers relating to—

Admission to Hosp'l	Furlough
Casualty Sheet (Officer's)	Med. Examination
Confinement	Misc. Information
Contracts	Pay or Clothing
Death or Effects	Personal Reports
Desertions	Rank
Discharge from Hosp'l	Transfer to Hosp'l
Discharge from Service	Transfer to V. R. C.
Duty	Transportation

MICROFILM PUBLICATION M 1834

COMPILED MILITARY SERVICE RECORDS
OF VOLUNTEER UNION SOLDIERS WHO SERVED WITH
THE UNITED STATES COLORED TROOPS (USCT)
13TH REGIMENT OF HEAVY ARTILLERY

PERSONAL PAPERS' TARGET SHEET

PLEASE NOTE THE CHECKED INFORMATION ABOUT THE PERSONAL PAPERS IN THIS FILE:

☐ NO PERSONAL PAPERS WERE FOUND IN THIS FILE WHEN THE RECORDS WERE ARRANGED FOR MICROFILMING.

☒ 3 PERSONAL PAPER(S) FOUND IN THIS FILE WHEN THE RECORDS WERE ARRANGED FOR MICROFILMING.

ENDORSEMENT.

No. 1062

Application of

John D Tyler

of Canton Trigg Co

for compensation for service of Slave

Columbus Tyler

enlisted Oct 9 — 1864

in A *Co.* 13th *Regiment,*

U. S. Colored Troops.

Received, Feby 25 — 186 7

compensation awarded

186

Dollars.

President Board of Claims.

P. O. Address of Applicant:

Canton Trigg Co
Cooke Baker & Co

Attorney for Claimant.

War Department,

ADJUTANT GENERAL'S OFFICE,

Washington, April 11th 186 7.

Respectfully returned to the Commission for the State of Ky, *with the information that* Columbus Tyler *was enlisted at* Bowling Green Ky *Oct 16th 1864 and was mustered in as* Pvt. Co. D 13th US Colt Inf Oct 16th 1864

31962 Ky

T. H. S. Hoggard

Asst. Adj't General.

Know all men by these presents
That I. I W Brittain for & in Con-
sideration of a note viz Isaac Brit-
-ttain for Eighty hundred dollars due 25th Dec by
Transferred to mely I. W Brittain without
out recourse. I have bargained and
Sold him a Negro boy Named. —
Callam has of about twenty five Years
of age & black Complexion. —
And I warrant said Negro Sound
in body Mind & title good & Slave for life.
Given under my hand & Seal this
1864

I W Brittain

PROOF OF OWNERSHIP.

STATE OF KENTUCKY,
COUNTY OF Trigg } ss.

ON THIS 29th day of November 1866, personally appeared before me, the undersigned, Clerk of the County Court in and for the County and State aforesaid, Thomas. H. Grinter, a citizen of Trigg, County and State aforesaid, and R. J. Ellis a citizen of, Trigg, County and State aforesaid, both of whom I certify to be respectable and worthy of credit, and after being duly sworn according to law, on oath state that they have examined the claim of Jno. D. Tyler., for pay for Columbus. Tyler. a slave into the service of the U. S., that they are and have been for years personally acquainted with Jno. D. Tyler., the applicant. That the said Columbus Tyler Tyler. slave belonged to and was the legal property of Jno. D. Enlistment, the said claimant, and was so at the alleged time of

Thomas H. Grinter
Richard J. Ellis

Sworn to and subscribed before me, this 29th day of Novr 1866

C C Stooks clerk
Trigg Co Court

State of Kentucky,
County of Trigg. } ss.

I, T. H. Grinter a citizen of Cadiz Trigg County and State aforesaid, and I, R J. Ellis, citizen of Trigg County and State aforesaid, state that we have known John D. Tyler for five years, that he is a resident of Trigg, County and State aforesaid, and that he (or she) has firmly and faithfully maintained his (or her) adherence and allegiance to the government of the United States, by defending its cause against the government and forces of the so-called Confederate States of America, in all suitable and practicable ways according to his or her ability and opportunity.

Thomas H. Grinter
Richard J. Ellis

Sworn to and subscribed before me, this 29th day of Novr 1866

C C Stooks Clerk
Trigg Co Court

NOTE.—If the affidavit is made before a magistrate, the official character of the magistrate must be authenticated by the proper clerk. If the claimant has a bill of sale from a previous owner, it must accompany the application.

Claim for Compensation for Slave.

No. ----------

I, John D. Tyler
Canton County of Trigg a loyal citizen and a resident of
State of Kentucky
hereby claim Compensation under the provisions of Section 24, Act approved February 24, 1864, and Section 2, Act approved July 28, 1866; for my Slave Columbus Tyler enlisted
Oct 9 186 4 at Cadiz by B R Kent
in the 13 th Regiment United States Colored Troops, Company A, certificate of which enlistment and descriptive roll,

as required, accompany this application. In proof of my loyalty to the Constitution and Government of the United States, I present the accompanying Oath, which I have taken, signed and acknowledged; to be filed with this application, in accordance with requirements of General Orders No. 329, 1863, War Department, Adjutant General's Office. Cook Bassett & Co are my legally authorized agents for the collection of this Claim

Witness
D S Bassett
Inv. Mississ

John D Tyler

Novem. 29. 1866

OATH OF ALLEGIANCE.

I, John D. Tyler the owner and claimant, do solemnly swear the foregoing claim is a just and true claim due to me as owner, by virtue of bill of Sale attached.

and that the facts alleged in said claim in respect to the Enlistment of said Slave into the military service of the United States are true. And I do further swear that I have never joined, *or been concerned in, any insurrection* or rebellion; *that I have never borne arms* against the United States; *that I have never given any aid, countenance, counsel or encouragement*, to any person or persons engaged, or whom I had reason to believe were about to engage, in insurrection, rebellion, or armed hostility *against* the United States; that I have never sought nor accepted, nor attempted to exercise the functions of any office, civil or military, nor to perform any service whatever under any authority or pretended authority in hostility to the United States; that I have not yielded a voluntary support to any insurrection, rebellion or pretended government, authority, power or constitution within the United States, hostile thereto. And I do further swear that to the best of my knowledge and ability, I have supported and defended and will continue to support and defend the United States, *against all enemies, foreign and domestic; and that I have supported, defended and obeyed, and will continue to support, defend and obey, the Constitution and Laws of the United States;* that I will bear true faith and allegiance to the same; and that I take this Oath freely, without any mental reservation or purpose of evasion: So help me God.

John D Tyler

Sworn to and subscribed before me at Cadiz Ky, this 29 day of 186 6

John C Hooks Clerk
Trigg Co Court

Claim for Compensation for Slave.

No. ----------

I, John D. Tyler a loyal citizen and a resident of Canton County of Trigg State of Kentucky hereby claim Compensation under the provisions of Section 24, Act approved February 24, 1864, and Section 2, Act approved July 28, 1866, for my Slave Columbus Tyler enlisted Oct 9 1863 at Cadiz by B L Kerr in the 13th Regiment United States Colored Troops, Company A, certificate of which enlistment and descriptive roll,

as required, accompany this application. In proof of my loyalty to the Constitution and Government of the United States, I present the accompanying Oath, which I have taken, signed and acknowledged; to be filed with this application, in accordance with requirements of General Orders No. 329, 1863, War Department, Adjutant General's Office. Cook Bamet & Co are my legally authorized agents for the collection of this Claim

John D Tyler

Witness
D S Barnett
Inv. Mich'y

Novem. 29. 1866

OATH OF ALLEGIANCE.

I, John D. Tyler the owner and claimant, do solemnly swear the foregoing claim is a just and true claim due to me as owner by virtue of bill of Sale attached.

and that the facts alleged in said claim in respect to the Enlistment of said Slave into the military service of the United States are true. And I do further swear that I have never joined, *or been concerned in, any insurrection* or rebellion; *that I have never borne arms* against the United States; *that I have never given any aid, countenance, counsel or encouragement*, to any person or persons engaged, or whom I had reason to believe were about to engage, in insurrection, rebellion, or armed hostility *against* the United States; that I have never sought nor accepted, nor attempted to exercise the functions of any office, civil or military, nor to perform any service whatever under any authority or pretended authority in hostility to the United States; that I have not yielded a voluntary support to any insurrection, rebellion or pretended government, authority, power or constitution within the United States, hostile thereto. And I do further swear that to the best of my knowledge and ability, I have supported and defended and will continue to support and defend the United States, *against all enemies, foreign and domestic; and that I have supported, defended and obeyed, and will continue to support, defend and obey, the Constitution and Laws of the United States;* that I will bear true faith and allegiance to the same; and that I take this Oath freely, without any mental reservation or purpose of evasion: So help me God.

John D Tyler

Sworn to and subscribed before me at Cadiz Ky, this 29 day of 1866

John C Hooks Clerk
Trigg Co Court

2125

Tyler. Harvey

Co a, 13 U.S. Col'd H. Art'y.

Private	Private

CARD NUMBERS.

1	5 5 1 6 3 2 7	26	
2	5 5 1 6 3 5 5	27	
3	5 5 1 6 5 2 1	28	
4	5 5 2 0 2 6 0	29	
5	5 5 2 0 4 2 7	30	
6	5 5 2 0 5 7 1	31	
7	9 1 2 8 1 0	32	
8		33	
9		34	
10		35	
11		36	
12		37	
13		38	
14		39	
15		40	
16		41	
17		42	
18		43	
19		44	
20		45	
21		46	
22		47	
23		48	
24		49	
25		50	

Book Mark:

See also

D. 2460879 Amd. W.D.
D. 2466756 Pomrm
D 2516875 Draft
D. 2520694 Pomrm
A.Y. 1375700

D Thurent Ex

13 H. Art'y. | U.S.C.T.

Warren Taylor

....., Co. A, 13 Reg't U. S. Col'd H. Art'y.

Appears on

Company Descriptive Book

of the organization named above.

DESCRIPTION.

Age 18 years; height 5 feet 3 inches.

Complexion Brown

Eyes Brn; hair Brn

Where born Henry Co Kentucky

Occupation Laborer

ENLISTMENT.

When May 17, 1865.

Where Eminence Ky

By whom Capt Fidler; term 3 y'rs.

Remarks:

Deserted

(383*a*) *Copyist.*

9 | **13** H. Art'y. | **U.S.C.T.**

Harvey Taylor

Appears with rank of Priv. on

Muster and Descriptive Roll of a Detachment of U. S. Vols. forwarded

for the 13 Reg't U. S. Col'd H. Art'y. Roll dated

Lebanon, Ky., May 17, 1865.

Where born Henry Co., Ky.

Age 18 y'rs; occupation laborer

When enlisted May 17, 1865.

Where enlisted Lebanon, Ky.

For what period enlisted 3 years.

Eyes black; hair black

Complexion copper; height 5 ft. 5 in.

When mustered in May 17, 1865.

Where mustered in Lebanon

Bounty paid $ 100; due $ 100

Where credited

Company to which assigned

Remarks: Name of Master, Bob Brown, Henry Co. Enlisted without his consent.

Book mark:

Humphries

(339) *Copyist.*

F | 13 H. Art'y. | U.S.C.T.

Harvey Tylar

Appears with rank of Pvt. on

Muster and Descriptive Roll of a Detachment of U. S. Vols. forwarded

for the 13 Reg't U. S. Col'd H. Art'y. Roll dated

D. R. Louisville, Ky., May 22, 1865.

Where born Henry, Ky.

Age 18 y'rs; occupation laborer

When enlisted May 17, 1865.

Where enlisted Lebanon

For what period enlisted 3 years.

Eyes black; hair black

Complexion copper; height 5 ft. 5 in.

When mustered in May 17, 1865.

Where mustered in Lebanon

Bounty paid $ 100; due $ 100

Where credited 5th Dist, Ky.

Company to which assigned

Remarks:

Book mark:

Humphrill

(339) Copyist.

13 H. Art'y. | U.S.C.T.

Henry Tyler

Appears with rank of Pvt. on

Muster and Descriptive Roll of a Detachment of U. S. Vols. ~~forwarded~~ organized as

Co. A,

for the 13 Reg't U. S. Col'd H. Art'y. Roll dated

Beaufort Nelson Co. Ky. June 23, 1865.

Where born Nelson Co. Ky.

Age 18 y'rs; occupation Laborer

When enlisted May 17, 1865.

Where enlisted Nelson Co. Ky.

For what period enlisted 3 years.

Eyes Blk; hair Blk

Complexion Copper; height 5 ft. 5 in.

When mustered in May 17, 1865.

Where mustered in Nelson Co. Ky.

Bounty paid $ 100; due $ ~~100~~

Where credited

Company to which assigned A.

Remarks:

Book mark: Nelson Co. Ky.

Examined

(339) Copyist.

I | 13 H. Art'y. | U.S.C.T.

Harvey Tyler

Pvt, Co. A, 13 Reg't U. S. Col'd H. Art'y.

Appears on

Company Muster Roll

for May & June, 186 5.

Present or absent Present

Stoppage, $ 100 for

Due Gov't, $ 100 for

Valuation of horse, $ 100

Valuation of horse equipments, $ 100

Remarks:

FROM SECOND AUDITOR'S ROLL.

Book mark:

W. T. Hughes

(358) *Copyist.*

F | 13 H. Art'y. | U.S.C.T.

Harvey Taylor

Corp, Co. A, 13 Reg't U. S. Col'd H. Art'y.

Appears on

Company Muster Roll

for July & Aug, 186 5.

Present or absent Present

Stoppage, $ 100 for

Due Gov't, $ 100 for

Valuation of horse, $ 100

Valuation of horse equipments, $ 100

Remarks: Due 1st Installment Govt Bounty $100

NEXT ROLL ON FILE MUSTERED OUT.

Book mark:

W. B. Hughes

(358) Copyist.

G. | 13 H. Art'y. | U.S.C.T.

Harvey Tyler

Pvt., Co. A, 13 Reg't U. S. Col'd H. Art'y.

Appears on **Co. Muster-out Roll,** dated Louisville Ky, Nov. 18, 186 5.

Muster-out to date Nov 18, 186 5.

Last paid to June 30, 186 5.

Clothing account:

Last settled ....., 186 ; drawn since $ 100

Due soldier $ ....100; due U. S. $ 64 91/100

Am't for cloth'g in kind or money adv'd $ 100

Due U. S. for arms, equipments, &c., $ 100

Bounty paid $ ....100; due $ 100

Remarks: .....

Book mark: O. 887. Ky

W. F. Hughes

(361) *Copyist.*

Tyler Barney

, Co. a, 13 Reg't Mo. Inf.

2 **Enclosures.**

Bed Cards	Final Statements
Burial Records	Furloughs or L. of A.
Certs. of Dis. for Discharge	Med. Certificates
C. M. Charges	Med. Des. Lists
Descriptive Lists	Orders
Discharge Certificates	Pris. of War Record
Enlistment Papers 1	Resignations

Other papers relating to—

Admission to Hosp'l	Furlough or L. of A.
Casualty Sheet	Med. Examination
Confinement	Misc. Information
Contracts	Pay or Clothing
Death or Effects	Personal Reports
Desertion	Rank
Discharge from Hosp'l	Transfer to Hosp'l
Discharge from Service	Transfer to V. R. C.
Duty	Transportation
	Slave claim 1

MICROFILM PUBLICATION M 1834

COMPILED MILITARY SERVICE RECORDS
OF VOLUNTEER UNION SOLDIERS WHO SERVED WITH
THE UNITED STATES COLORED TROOPS (USCT)
13TH REGIMENT OF HEAVY ARTILLERY

PERSONAL PAPERS' TARGET SHEET

PLEASE NOTE THE CHECKED INFORMATION ABOUT THE PERSONAL PAPERS IN THIS FILE:

☐ NO PERSONAL PAPERS WERE FOUND IN THIS FILE WHEN THE RECORDS WERE ARRANGED FOR MICROFILMING.

☒ 3 PERSONAL PAPER(S) FOUND IN THIS FILE WHEN THE RECORDS WERE ARRANGED FOR MICROFILMING.

DECLARATION OF RECRUIT.

I, Harry Tyler ..... desiring to volunteer as a soldier in the ARMY OF THE UNITED STATES, for the term of *Three Years*, DO DECLARE That I am 18 years and ..... months of age; that I have never been discharged from the United States service on account of disability or by sentence of a court-martial, or by order before the expiration of a term of enlistment; and I know of no impediment to my serving honestly and faithfully as a soldier for three years.

GIVEN at Lancaster Pa

the 17th day of May 1865

Witness:

H. Lancaster

Harry Tyler

Enlisted

Volunteered at Lancaster Pa

May 17th 1865

By Capt Jno Lyter

Co A 209th Regt Pa Vols

No. 61

Mustered May 17th 1865

Consent of Parent or Guardian in case of a Minor, if a Free Man, or in the case of a Slave, of the Person to whom he owes Service:

I, ... DO CERTIFY, That I am the .....

.....

that the said ..... is ..... years of age; and I do freely give my CONSENT to his volunteering as a SOLDIER in the Army of the United States, for the period of THREE YEARS, under the conditions of the laws of the United States.

GIVEN at .....

the ..... day of .....

Witness:

.....

.....

NOTE 1.—This blank will be used for enlistments of United States colored troops. They will be made out in duplicate in all cases—one to accompany the recruiting return of the superintendent (not the recruiting officer) to the Adjutant General, and one to accompany the accounts of the officer who pays bounty, &c.

NOTE 2.—An enlistment holds to pay, bounty, pension, &c. A muster-in must, in all cases, precede payment of pay, bounty, pension, &c. A muster-in roll, must in all cases, be filed in the Adjutant General's Office as evidence of muster-in. The mustering officer, commissary, or assistant commissary of musters, as the case may be, will countersign both enlistments as having mustered the soldiers into the service of the United States before either of them is given to the disbursing officer.

(A. G. O. No. 74 & 76.)

UNITED STATES COLORED TROOPS ENLISTMENT.

STATE OF Kentucky TOWN OF Clermont

I, Harvey Tyler born in Henry Co

in the State of Kentucky aged 18 years

and by occupation a Laborer Do HEREBY ACKNOWLEDGE to

have volunteered 17th day of May 1865

to serve as a **Soldier** in the **Army of the United States of America,** for the period of THREE YEARS, unless sooner discharged by proper authority: Do also agree to accept such bounty, pay, rations, and clothing, as are, or may be, established by law for the U. S. colored troops.

And I, Harvey Tyler

do solemnly swear that I will bear true faith and allegiance to the **United States of America,** and that I will serve them honestly and faithfully against all their enemies or opposers whomsoever; and that I will observe and obey the orders of the President of the United States, and the orders of the officers appointed over me, according to the Rules and Articles of War.

Sworn and subscribed to, at Clermont

this 17th day of May 1865

Before John M Fuller
Capt & A.A.A.G.

Harvey Tyler
mark

I CERTIFY, ON HONOR, That I have carefully examined the above named Volunteer agreeably to the General Regulations of the Army, and that, in my opinion, he is free from all bodily defects and mental infirmity, which would in any way disqualify him from performing the duties of a soldier.

John C Maxwell

EXAMINING SURGEON.

I CERTIFY, ON HONOR, That I have minutely inspected the Volunteer H Tyler previously to his enlistment, and that he was entirely sober when enlisted; that, to the best of my judgment and belief, he is of lawful age; and that, in accepting him as duly qualified to perform the duties of an able-bodied soldier, I have strictly observed the regulations which govern the recruiting service. This soldier has Blk eyes, Blk hair, Dark complexion, is 5 feet 3 inches high.

John M Fuller
Capt & A.A.A.G.

RECRUITING OFFICER OR AGENT.

Mustered into the United States Service 17th day of May 1865.

John M Fuller
Capt & A.A.A.G.

Mustering Officer.

Mustered into the service of the United States, for three years or during the war, from date of enlistment, in Company ..... Regiment of ..... Volunteers, on the ..... day of ....., 186 , at .....

War Department,
ADJUTANT GENERAL'S OFFICE,
Washington, Feby 5 1867

Respectfully returned to the Commission for the State of Kentucky with the information that Harry Tyler. was enlisted at Lebanon Ky. May 17th 1865. and was mustered in as Pvt in Co. A. 13th U. S. C. H. A. May 17th 1865.

A. B. V.

Asst. Adj't General.

P. 881 Wy.

ENDORSEMENT.

No. 511

APPLICATION OF

Thomas J. Pearce

OF

Henry County, Ky.

For Compensation for Service of Slave,

Harvey Tyler

Enlisted May 17 , 1863,

In A Co., 13 U.S.A. Regiment

U. S. Colored Troops.

Received Jany 14 , 1867.

Compensation Awarded

, 186 ,

Dollars.

President Board of Claims.

P. O. ADDRESS OF CLAIMANT:

Tho. J. Pearce
New castle, Ky.

Harlan & Harlan
Frankfort, Ky.

State of Kentucky
County of Henry } ss

I E. R. Thomas Clerk of the County
Court in & for the County & State aforesaid certify that
Wm A. Perry Esq. before whom the foregoing
affidavits were made, was when taking the same
an acting Justice of the Peace in & for said
County, duly commissioned, qualified & sworn,
and that his signature to the foregoing three
certificates, are his genuine signatures —

In witness whereof I hereto set my
name and seal of said Court
this 13th day of Dec. 1866 at
New Castle. Ky.

E. R. Thomas

INTERNAL
5
CENTS
REVENUE
5
CENTS
5
REVENUE
INTERNAL
5
CENTS
5
CENTS
5
REVENUE
INTERNAL
5
CENTS
5
CENTS
5
REVENUE
INTERNAL
5
CENTS

Headquarters Kentucky Volunteers,

Adjutant-General's Office,

Frankfort, Dec 3rd, 1866.

I hereby certify, that it appears from the U. S. Muster Rolls on file in this Office, that Harvey Tyler was enrolled on the 17th day of May, 1865, at Lebanon Ky, by Capt J. M. Fidler, and mustered into the U. S. service on the 17th day of May, 1865, at Lebanon Ky by Capt Fidler, to serve Three years. Said Harvey Tyler is described as follows: 18 yrs age, Black eyes, Black hair, Copper complexion, 5 ft 5 in height. It further appears from said Rolls, that Harvey Tyler owed service to Bob Brown and was credited to Henry County Ky and assigned to Company A. 13th U. S. C. Cavly (Heavy)

In Testimony Whereof, I have hereunto set my hand, and affixed my Official Seal, this 3rd day of Dec, 1866.

D. W. Lindsey

~~Adjutant General of Kentucky.~~

R 900

Claim for Compensation for Enlisted Slave.

No. .....

I, Thomas J. Pearce, a loyal citizen, and a resident of New Castle, County of Henry, State of Kentucky. hereby claim compensation, under the provisions of section 24, Act approved February 24, 1864, and section 2, Act approved July 28, 1866, for my slave Harvey Tyler, enlisted May 17, 1865, at Lebanon Kentucky, by Capt. J. M. Fiddler, in the 13th U.S.A. Regiment U. S. Colored Troops, Co. A.; certificate of which enlistment, and a descriptive list, as required, accompany this application. That I did not acquire said slave subsequent to said enlistment, but had a valid title to him at the date of said enlistment, and previous thereto, I having acquired my title to him and my ownership over him as follows, to-wit:

By purchase from Thomas Brown of Henry County Kentucky - to whom I paid cash for him -

In proof of my loyalty to the Constitution and Government of the United States, I present the accompanying oath, which I have taken, signed and acknowledged, to be filed with this application, in accordance with requirement of General Orders No. 329, 1863, War Department, Adjutant General's Office.

Thomas J. Pearce

December 13th, 1866.

Oath of Allegiance.

I, Thomas J. Pearce, the owner and claimant, do solemnly swear that the foregoing claim is a just and true claim due to me as master and owner of the said slave, and that the facts alleged in said claim in respect to the draft or enlistment [*as the case may be*] of said slave into the military service of the United States are true. And I do further swear, that I have never joined, *or been concerned in, any insurrection* or rebellion; *that I have never borne arms* against the United States; *that I have never given any aid, countenance, counsel, or encouragement* to any person or persons engaged, or whom I had reason to believe were about to engage, in insurrection, rebellion, or armed hostility *against the United States;* that I have neither sought nor accepted, nor attempted to exercise the functions of any office, civil or military, nor to perform any service whatever, under any authority, or pretended authority, in hostility to the United States; that I have not yielded a voluntary support to any insurrection, rebellion, or pretended government, authority, power, or constitution within the United States, hostile thereto. And I do further swear, that, to the best of my knowledge and ability, I have supported and defended, and will continue to support and defend, the United States, *against all enemies, foreign and domestic; and that I have supported, defended, and obeyed, and will continue to support, defend, and obey, the Constitution and laws of the United States;* that I will bear true faith and allegiance to the same; and that I take this oath freely, without any mental reservation or purpose of evasion: So help me God.

Thomas J. Pearce

Sworn to and subscribed before me, at New Castle, Ky., this 13 day of December, 1866.

Wm A Perry

Justice of the Peace

CERTIFICATE OF AWARD OF THE BOARD OF CLAIMS.

Office of the Board of Claims,

For Slaves Enlisted or Drafted in the Service of the United States,

....., 186

We Hereby Certify, That ....., of

..... County, State of ....., having proved under

oath, ... loyalty to the Constitution and Government of the United States, and established .....

title as to the ownership of ....., a slave, enlisted or drafted

[*as the case may be*] and mustered at ..... on the ..... day

of ....., 186 , by ....., in the service

of the United States, in the ..... Regiment Colored Troops, Company ....., the sum

of ..... dollars has been awarded to ..... by this Board, subject to the

approval of the Secretary of War, as a compensation for the said slave, under the provisions of section 24, Act approved February 24, 1864, and section 2, Act approved July 28, 1866.

....., *President of the Board.*

....., *Member of the Board.*

....., *Member of the Board.*

To .....,

Chief of the Bureau for the Organization of Colored Troops,
Washington, D. C.

POWER OF ATTORNEY.

My Post-office address is New Castle, County of Henry, State of Kentucky, and I hereby direct that all communications to me, touching this claim, be sent under cover to Harlan & Harlan, Frankfort Ky, who is hereby appointed and constituted my true and lawful attorney, to prosecute this claim for me, and who is hereby authorized and empowered to receive and receipt for any award, order, draft, certificate, voucher, warrant, papers, or money that may be issued in the adjustment of this claim, or the payment thereof, the same as I might or could do in person were I present and acting for myself, and to file any additional evidence or papers that may be required in the prosecution of this claim.

The owner signs here. } Thomas J. Pearce

[Witness.]

Thomas Jakely

Gw J Wenneton

} Two witnesses to owner's signature sign here.

50 Cent Stamp.]

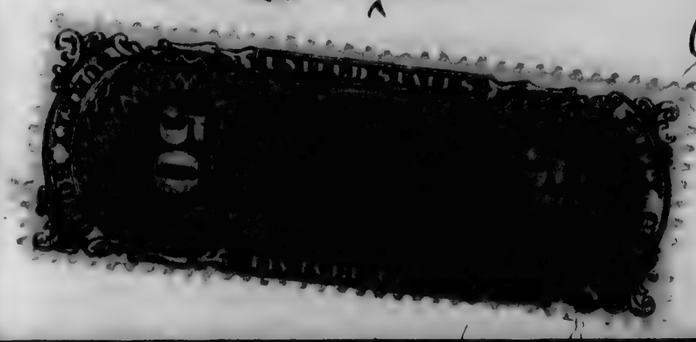

Proof of Ownership.

State of Kentucky,
County of Henry } SS.

We, Thomas Pankley and Geo T Hunston, each of lawful age, and resident citizens of the State and County aforesaid, do certify that Thomas S Peared, of the State and County aforesaid, was, on the 17th day of May, 1865, the lawful owner of the slave named Harvey Tyler, referred to and described in the foregoing claim for compensation.

Thomas Pankley
Geo T Hunston

Sworn to and subscribed before me, a Justice of the Peace for the County of Henry, State of Kentucky, this the 13 day of December, 1866.

Wm A Perry
Justice of the Peace

Proof of Loyalty.

State of Kentucky,
County of Henry } SS.

We, Thomas Pankley and George T Hunston, loyal men, and each of lawful age, and resident citizens of the County of Henry, in the State and County aforesaid, upon our oaths declare that we have known Thomas S. Peared, a resident of the State and County aforesaid, since the 4th day of March, 1861, and know that he has firmly and faithfully maintained his adherence and allegiance to the Government of the United States, by defending its cause against the Government and forces of the so-called Confederate States of America, in all suitable and practicable ways, and according to his ability and opportunity.

Thomas Pankley
Geo T Hunston

Sworn to and subscribed before me, a Justice of the Peace for the County of Henry, State of Kentucky, this the 13 day of December, 1866.

Wm A Perry Justice of the Peace

2126

Tyler. Henry

Co a, 13 U.S.Col'd H. Art'y.

Private	Private

CARD NUMBERS.

1	5-5-1 6 5-6 8	26	
2	5-5-1 9 8 3 5-	27	
3	5-5-1 9 9 6 7	28	
4	5-5-2 0 1 2 0	29	
5	5-5-1 9 5-5-4	30	
6	5-5 1 9 5 6 2	31	
7	5-5-2 0 6 3 3	32	
8	9 1 2 8 0 5-4	33	
9	2757-CT-1883	34	
10	4 3 1 3 5 9 9 7	35	
11		36	
12		37	
13		38	
14		39	
15		40	
16		41	
17		42	
18		43	
19		44	
20		45	
21		46	
22		47	
23		48	
24		49	
25		50	

Book Mark: 2757 C.T. 1883

See also

A | 13 H. Art'y. | U.S.C.T.

Henry Tyler

....., Co. C, 13 Reg't U. S. Col'd H. Art'y.

Appears on

Company Descriptive Book

of the organization named above.

DESCRIPTION.

Age 27 years; height 5 feet 6 inches.

Complexion Brown

Eyes Blk; hair Blk

Where born Trigg Co Kentucky

Occupation Farmer

ENLISTMENT.

When Oct 16, 186 4.

Where Bowling Green

By whom Capt Stokes; term 3 y'rs.

Remarks: Deserted at Eddyville Ky March 23 1865 while on recruiting service

Deadrick

(383g) Copyist.

I | 13 H. Art'y. | U.S.C.T.

Henry Tyler

Pvt, Co. A, 13 Reg't U. S. Col'd H. Art'y.

Age ..... years.

Appears on

Company Muster Roll*

for to Dec 31, 1864.

Joined for duty and enrolled:

When Oct 16, 1864.

Where Bowling Green Ky

Period 3 years

Mustered in:

When Oct 16, 1864.

Where Bowling Green Ky

Present or absent Present

Stoppage, $ 100 for .....

Due Gov't, $ 100 for .....

Valuation of horse, $ 100

Valuation of horse equipments, $ 100

Remarks: .....

* First current roll. No muster-in roll of this company on file.

Book mark: W. T. Hughes

Copyist.

I 13 H. A. U.S.C.T.

Henry Tyler

Appears with rank of Pvt on

Muster and Descriptive Roll

of a Detachment of U.S. Colored recruits forwarded for 13 Regt U.S. Colored H Artly. Roll dated Bowling Green Ky, Oct 31, 1864.

Where born Trigg Co. Ky.

Age 27 years; occupation Farmer

When enlisted Oct 17, 1864.

Where enlisted Trigg Co Ky

For what period enlisted 3 years.

Eyes brown; hair blk

Complexion brown; height 5 ft. 6 in.

When mustered in ____, 186 .

Where mustered in ____

Bounty paid $ ____ 100; due $ ____ 100

Clothing account:

Last settled ____, 186 ; drawn since $ 15 30/100

Date of first muster Oct 16, 1864.

Company to which assigned ____

Remarks: New recruit Christian Co. owed service to John Tyler

Book mark : ____

G. L. Burk

(356m) **Copyist.**

F | **13** H. Art'y. | **U.S.C.T.**

Henry Tyler

Pay, Co. A, 13 Reg't U. S. Col'd H. Art'y.

Appears on

Company Muster Roll

for Jan & Feb, 1865.

Present or absent Present

Stoppage, $ 100 for

Due Gov't, $ 100 for

Valuation of horse, $ 100

Valuation of horse equipments, $ 100

Remarks:

Due $40 first installment
of Gov. Bounty

Book mark:

P. G. Hughes

(358) *Copyist.*

D / 13th Army U.S.C.T.

D

Henry Snyder

Pvt, Co. A, 43 Reg't U. S. Col'd 13th Army

Appears on

Descriptive List of Deserters

dated March 31, 1865.

Deserted:

When March 23, 1865.

Where Eddyville Ky

Arrested:

When ....., 186 .

Where .....

Remarks Absconding Aug 18 1864
Camp Dix Aug 9 60

Book mark: .....

R Stewart
Copyist.

C 13 Ky U.S.C.T.

Henry Taylor

Pvt., Co. C, 13 Reg't U. S. Col'd Ky

Appears on

Descriptive List of Deserters

dated March 31, 1865.

Deserted:

When March 23, 1865.

Where Eddyville, Ky.

Arrested:

When ....., 186 .

Where .....

Remarks: Reported absent on Detached Recruiting Service at Eddyville, Ky. Drilled 1 Rifle Musket French and full suit Accoutrements $18.46 1 full suit C. G. Equipage $9.60

Book mark: .....

B. Stewart

Copyist.

(351)

G | 13 H. Art'y. | U.S.C.T.

Henry Tyler

Priv, Co. A, 13 Reg't U. S. Col'd H. Art'y.

Appears on

Company Muster Roll

for Mch & Apr, 186 5.

Present or absent.....

Stoppage, $.....100 for .....

.....

Due Gov't, $.....100 for .....

.....

Valuation of horse, $.....100

Valuation of horse equipments, $.....100

Remarks: .....

Deserted at Eddyville Ky
Mch 23. 65 while on
detached Service recruiting.
Leaving with him a Complete
Set of Arms & accoutrements
& C & Equipments.

.....

Book mark: .....

W. T. Boyle

(358) *Copyist.*

Co F 13th Arty | U.S.C.T.

Henry Taylor

Appears with rank of Pvt. on

Muster and Descriptive Rolls of Detachments of U. S. Vols. forwarded

for the 13 Reg't U. S. Col'd Arty Roll dated Organized as 2d Co

Camp Nelson, Ky. June 23, 1865.

Where born Trigg Ky.

Age 27 **y'rs; occupation** Farmer

When enlisted Oct. 16, 1864.

Where enlisted B. Green Ky.

For what period enlisted 3 **years.**

Eyes Blk; **hair** Blk

Complexion Brown; **height** 5 **ft.** 6 **in.**

When mustered in Oct. 16, 1864.

Where mustered in B. Green Ky.

Bounty paid $ 100; **due $** 100

Where credited

Company to which assigned A.

Remarks: Deserted at Eddyville Ky. March 23/65. While on recruiting service.

Book mark:

Wagner

339) **Copyist.**

F | 13 H. Art'y. | U.S.C.T.

Henry Tyler

Pvt., Co. A, 13 Reg't U. S. Col'd H. Art'y.

Appears on **Co. Muster-out Roll,** dated

Louisville Ky, Aug 18, 186 5.

Muster-out to date ....., 186 .

Last paid to Pay due from Enlistment, 186 .

Clothing account:

Last settled....., 186 ; drawn since $.....100

Due soldier $.....100; due U. S. $.....100

Am't for cloth'g in kind or money adv'd $.....100

Due U. S. for arms, equipments, &c., $.....100

Bounty paid $.....100; due $.....100

Remarks: Deserted at Eddyville Ky Mch 2 3. 65 while on recruiting service

Book mark: 2757. C. J. 1883

H. T. Hughes

(361) *Copyist.*

J 13th Hvy. Artly U.S.C.T.

Henry Tyler

, Co. A, 13th Reg't U.S.C.H.A.

NOTATION.

Book mark: 2757-C-J-1883.

War Department,

Adjutant General's Office,

Washington, July 15, 1886.

Application for removal of the charge of desertion and for an honorable discharge has been denied.

W. P. Allen

(437b) *Copyist.*

Tyler, Henry

C, Co. A, 13 Reg't U.S.C.T.

3 Enclosures. Ha

Bed Cards	Final Statements
Burial Records	Furloughs or L. of A
Certs. of Dis. for Discharge	Med. Certificates
C. M. Charges	Med. Des. Lists
Descriptive Lists	Orders
Discharge Certificates	Pris. of War Record 1
Enlistment Papers 2	Resignations

Other papers relating to—

Admission to Hosp'l	Furlough or L. of A
Casualty Sheet	Med. Examination
Confinement	Misc. Information
Contracts	Pay or Clothing
Death or Effects	Personal Reports
Desertion	Rank
Discharge from Hosp'l	Transfer to Hosp'l
Discharge from Service	Transfer to V. R. C.
Duty	Transportation

DECLARATION OF RECRUIT.

I, Henry Tyler desiring to volunteer as a soldier in the ARMY OF THE UNITED STATES, for the term of *Three Years*, DO DECLARE That I am 27 years and ..... months of age; that I have never been discharged from the United States service on account of disability or by sentence of a court-martial, or by order before the expiration of a term of enlistment; and I know of no impediment to my serving honestly and faithfully as a soldier for three years.

GIVEN at Bowling Green Ky

the 16th day of October 1864

Witness:

A G Hobson Capt & Pro. Mar
3d Dist. Ky & Rutg. Office

Henry his + Tyler
Mark

No. 84
Tyler Henry
Volunteered at Bowling Green Ky
October 16 1864
A G Hobson Capt. and Pro. Mar
3 Dist Ky

76
Sent Hand & Dist - Ins

Consent of Parent or Guardian in case of a Minor, if a Free Man, or in the case of a Slave, of the Person to whom he owes Service:

I, ... DO CERTIFY, That I am

the ....

....

that the said ..... is ..... years of age; and I do freely give my CONSENT to his volunteering as a SOLDIER in the Army of the United States, for the period of THREE YEARS, under the conditions of the laws of the United States.

GIVEN at .....

the ..... day of .....

Witness:

....

NOTE 1.—This blank will be used for enlistments of United States colored troops. They will be made out in duplicate in all cases—one to accompany the recruiting urn of the superintendent (not the recruiting officer) to the Adjutant General, and one to accompany the accounts of the officer who pays bounty, &c.

NOTE 2.—An enlistment holds to service. A muster-in must, in all cases, precede payment of pay, bounty, pension, &c. A muster-in roll, must in all cases, be filed in Adjutant General's Office as evidence of muster-in. The mustering officer, commissary, or assistant commissary of musters, as the case may be, will countersign both istments as having mustered the soldiers into the service of the United States before either of them is given to the disbursing officer.

UNITED STATES COLORED TROOPS ENLISTMENT.

STATE OF Kentucky TOWN OF Bowling Green Under Christian County

I, Henry Dyer born in Trigg Co

in the State of Kentucky aged Twenty Seven years

and by occupation a Farmer Do HEREBY ACKNOWLEDGE to

have volunteered 16" day of October 1864

to serve as a **Soldier** in the **Army of the United States of America,** for the period of THREE YEARS, unless sooner discharged by proper authority: Do also agree to accept such bounty, pay, rations, and clothing, as are, or may be, established by law for the U. S. colored troops.

And I, Henry Dyer

do solemnly swear that I will bear true faith and allegiance to the **United States of America,** and that I will serve them honestly and faithfully against all their enemies or opposers whomsoever; and that I will observe and obey the orders of the President of the United States, and the orders of the officers appointed over me, according to the Rules and Articles of War.

Sworn and subscribed to, at Bowling Green

this 16" day of Oct 1864

Before A G Tabor Capt and Pr Mar

3 Dist Ky and Recruiting Officer

his
Henry + Dyer
mark

I CERTIFY, ON HONOR, That I have carefully examined the above named Volunteer agreeably to the General Regulations of the Army, and that, in my opinion, he is free from all bodily defects and mental infirmity, which would in any way disqualify him from performing the duties of a soldier.

J W Bailey

EXAMINING SURGEON.

I CERTIFY, ON HONOR, That I have minutely inspected the Volunteer, Henry Dyer previously to his enlistment, and that he was entirely sober when enlisted; that, to the best of my judgment and belief, he is of lawful age; and that, in accepting him as duly qualified to perform the duties of an able-bodied soldier, I have strictly observed the regulations which govern the recruiting service. This soldier has Black *eyes*, Black *hair*, Brown *complexion*, is 5 *feet* 6 *inches* high.

A G Tabor Capt 14 Reg. Mich. Vol
3 Dist. Ky

RECRUITING OFFICER OR AGENT.

Mustered into the United States Service 16" day of Oct 1864

A G Tabor Capt 14 Reg. Mich
3 Dist. Ky

Mustering Officer.

Mustered into the service of the United States, for three years or during the war, from date of enlistment, in Company ..... Regiment of ..... Volunteers, on the ..... day of ....., 186 , at .....

NOTE 1.—This blank will be used for enlistments of United States colored troops. They will be made out in duplicate in all cases—one to accompany the recruiting return of the superintendent (not the recruiting officer) to the Adjutant General, and one to accompany the accounts of the officer who pays bounty, &c.

NOTE 2.—An enlistment holds to service. A muster-in must, in all cases, precede payment of pay, bounty, pension, &c. A muster-in roll, must in the Adjutant General's Office as evidence of muster-in. The mustering officer, commissary, or assistant commissary of musters, as the case may be, will countersign both enlistments as having mustered the soldiers into the service of the United States before either of them is given to the disbursing officer.

DECLARATION OF RECRUIT.

I, Henry Dyer ..... desiring to volunteer as a soldier in the ARMY OF THE UNITED STATES, for the term of *Three Years*, DO DECLARE That I am 27 years and ..... months of age; that I have never been discharged from the United States service on account of disability or by sentence of a court-martial, or by order before the expiration of a term of enlistment; and I know of no impediment to my serving honestly and faithfully as a soldier for three years.

GIVEN at Bowling Green Ky

the 16" day of Oct 1864

Witness:

A G Hobson Capt & Rec Offr
3d Dist. Ky Heavy Artillery

his
Henry + Dyer
mark

No. 1311

Volunteered at Bowling Green Ky

October 16 1864.

Consent of Parent or Guardian in case of a Minor, if a Free Man, or in the case of a Slave, of the Person to whom he owes Service:

I, ... DO CERTIFY, That I am

the ....

....

that the said ..... is .... years of age; and I

do freely give my CONSENT to his volunteering as a SOLDIER in the Army of the United States,

for the period of THREE YEARS, under the conditions of the laws of the United States.

GIVEN at .....

the ..... day of .....

Witness:

.....

.....

(A. G. O. No. 74 & 76.)

UNITED STATES COLORED TROOPS ENLISTMENT.

STATE OF Kentucky TOWN OF Bowling Green

I, Henry Dyer born in Doigy Co

in the State of Kentucky aged Twenty Seven years

and by occupation a Farmer Do HEREBY ACKNOWLEDGE to

have volunteered 16" day of October 1864

to serve as a **Soldier** in the **Army of the United States of America,** for the period of THREE YEARS, unless sooner discharged by proper authority: Do also agree to accept such bounty, pay, rations, and clothing, as are, or may be, established by law for the U. S. colored troops.

And I, Henry Dyer

do solemnly swear that I will bear true faith and allegiance to the **United States of America,** and that I will serve them honestly and faithfully against all their enemies or opposers whomsoever; and that I will observe and obey the orders of the President of the United States, and the orders of the officers appointed over me, according to the Rules and Articles of War.

Sworn and subscribed to, at Bowling Green

this 16" day of Oct 1864

Before A G Hobson Capt & Pro. Mar. D Dist. Ky

Henry his × Dyer (mark)

I CERTIFY, ON HONOR, That I have carefully examined the above named Volunteer agreeably to the General Regulations of the Army, and that, in my opinion, he is free from all bodily defects and mental infirmity, which would in any way disqualify him from performing the duties of a soldier.

J W Bailey

EXAMINING SURGEON.

I CERTIFY, ON HONOR, That I have minutely inspected the Volunteer Henry Dyer previously to his enlistment, and that he was entirely sober when enlisted; that, to the best of my judgment and belief, he is of lawful age; and that, in accepting him as duly qualified to perform the duties of an able-bodied soldier, I have strictly observed the regulations which govern the recruiting service. This soldier has Black *eyes,* Black *hair,* Brown *complexion,* is 5 *feet* 6 *inches* high.

A G Hobson Capt & Pro. Mar. D

Dist Ky

RECRUITING OFFICER OR AGENT.

Mustered into the United States Service 16" day of Oct 1864

A G Hobson Capt & Pro. Mar.

D Dist. Ky

Mustering Officer.

Mustered into the service of the United States, for three years or during the war, from date of enlistment, in Company ..... Regiment of ..... Volunteers, on the ..... day of ....., 186 , at .....

MEMORANDUM FROM PRISONER OF WAR RECORDS. *No.* _____

(This blank to be used only in the arrangement of said records.)

NAME.	RANK.	ORGANIZATION.				INFORMATION OBTAINED FROM—				
		No. of Reg't.	State.	Arm of Service.	Co.	Records of—	Vol.	Page.	Vol.	Page.
Tyler Henry	P	13	U. S. C. T.	H	"A"					

Captured at _____, 186 , confined at Richmond, Va., _____, 186 .

Admitted to Hospital at _____

where he died _____, 186 , of _____

Paroled at _____, 186 ; reported at Camp Parole, Md., _____, 186 .

No Record subsequent to March 22/65

Copied by CA Oct 31/83

(Record continued.)

Furloughed ....., 186 , for ..... days; returned ....., 186 ;
deserted ....., 186 ; .....

2 and Case spec Woodman Acts Be. 83

Copied by .....

Adjutant General's Office,

....., 18

This is accepted as referring to .....

Co. ....., Reg't, ...

and records will be corrected accordingly.

Assistant Adjutant Gen'l.

2137

Tyler James

Co F, 13 U.S. Col'd H. Art'y.

Private	Private

CARD NUMBERS.

1	5-5-15-673	26	
2	5-5-16 7 5-6	27	
3	5-5-207 5-5-	28	
4	5-5-205 18	29	
5	5-5 19 5-82	30	
6	5-5 21 4 13	31	
7	9 1 2 8 2 3 4	32	
8		33	
9		34	
10		35	
11		36	
12		37	
13		38	
14		39	
15		40	
16		41	
17		42	
18		43	
19		44	
20		45	
21		46	
22		47	
23		48	
24		49	
25		50	

Book Mark:

See also

I | 13 H. Art'y. | U.S.C.T.

James Tyler

....., Co. K, 13 Reg't U.S. Col'd H. Art'y.

Appears on

Company Descriptive Book

of the organization named above.

DESCRIPTION.

Age 33 years; height 5 feet 6 inches.

Complexion Black

Eyes Black; hair Black

Where born Fayette Co Ky

Occupation Farmer

ENLISTMENT.

When Dec 26, 186 4.

Where Paducah Ky

By whom Capt Morgan; term 3 y'rs.

Remarks: Deserted at Cdy
mth Ky April 28. 1865

Dedrick

(383g) Copyist.

T | **13** H. Art'y. | **U.S.C.T.**

James Tyler

Appears with rank of Pvt on

Muster and Descriptive Roll of a Detachment of U. S. Vols. forwarded

for the 13 Reg't U. S. Col'd H. Art'y. Roll dated

Paducah Ky, Dec. 20, 1864.

Where born Trigg Co. Ky

Age 35 y'rs; occupation Farmer

When enlisted Dec. 20, 1864.

Where enlisted Paducah, Ky

For what period enlisted 3 years.

Eyes Black; hair Black

Complexion Black; height 5 ft. 6 in.

When mustered in Dec. 20, 1864.

Where mustered in

Bounty paid $ 100; due $ 100

Where credited Caldwell Co. 1st Dist of Ky

Company to which assigned B

Remarks:

Book mark:

Hammer

(339) *Copyist.*

I | 13 H. Art'y | **U.S.C.T.**

James Tyler

Pvt., Co. B, 13 Reg't U. S. Col'd H. Art'y.

Age ..... **years.**

Appears on

Company Muster Roll*

for Enlistment to Feb. 28, 1865.

Joined for duty and enrolled:

When Dec. 20, 1864.

Where Paducah, Ky.,

Period 3 years.

Mustered in:

When Dec. 20, 1864.

Where Paducah, Ky.

Present or absent Present.

Stoppage, $ 100 for .....

Due Gov't, $ 100 for .....

Valuation of horse, $ 100

Valuation of horse equipments, $ 100

Remarks: Due 1st install=
ment Gov't bounty, $40.

*First current roll. No muster-in roll of this company on file.

Book mark: .....

Falconer

(3581) *Copyist.*

J | 13 H. Art'y. | U.S.C.T.

James Tyler

Pvt., Co. B, 13 Reg't U. S. Col'd H. Art'y.

Appears on

Company Muster Roll

for Mar. & Apr., 1865.

Present or absent

Stoppage, $ 100 for

Due Gov't, $ 100 for

Valuation of horse, $ 100

Valuation of horse equipments, $ 100

Remarks: Deserted at Ed. Ayraille, Ky., Apr. 28, '65. To be charged with the following articles in one Springfield rifled musket $19.25, one bayonet scabbard 1.56, cap (over)

Book mark:

Falconer

(358) *Copyist.*

JAN. 16 1891 5520918

pouch and cone pick .56, gun sling .31, cartridge box $1.27, cartridge box plate .08, cartridge box belt .69, cartridge box belt plate .09, waist belt .38, waist belt plate .08, knapsack $3.10, haversack .95; canteen .65; one piece shelter tent $4.90.

Total $32.88.

C 13th Ky U.S.C.T.

James Tyler

Pvt., Co B, 13 Reg't U. S. Col'd Inf'y

Appears on

Descriptive List of Deserters

dated May 19, 1865.

Deserted:

When April 28, 1865.

Where Eddyville Ky

Arrested:

When ....., 186 .

Where .....

Remarks: Enl for war Nf Ord
#23.28 Cloth. Camp & Gar
Eq #940

Book mark: .....

(351) Copyist.

I | 13 H. Art'y. | U.S.C.T.

James Tyler

Appears with rank of Pvt. on

Muster and Descriptive Roll of a Detachment of U. S. Vols. ~~forwarded~~

Co. B.

for the 13 Reg't U. S. Col'd H. Art'y. Roll dated

Camp Nelson June 23, 1865.

Where born Trigg Co. Ky.

Age 35 y'rs; occupation Farmer

When enlisted Dec. 20, 1864.

Where enlisted Paducah, Ky.

For what period enlisted 3 years.

Eyes Bk.; hair Bk.

Complexion Bk.; height 5 ft. 6 in.

When mustered in Dec. 20, 1864.

Where mustered in Paducah, Ky.

Bounty paid $ 100; due $ 100

Where credited 1st Dist. Ky.

Company to which assigned C

Remarks: Deserted Apl. 28/66 ~
At Eddyville Ky.

Book mark: I 1598 Ky.

Maynard

(339) *Copyist.*

J | 13 H. Art'y. | U.S.C.T.

James Tyler

Pvt., Co. B., 13 Reg't U. S. Col'd H. Art'y.

Appears on **Co. Muster-out Roll,** dated

Louisville, Ky., Nov. 18, 1865.

Muster-out to date ....., 186 .

Last paid to Never Pd. ~~186~~ .

Clothing account:

Last settled....., 186 ; drawn since $.....100

Due soldier $.....100; due U. S. $.....100

Am't for cloth'g in kind or money adv'd $.....100

Due U. S. for arms, equipments, &c., $.....100

Bounty paid $.....100; due $.....100

Remarks: Deserted Nov. 28, '65, Eddyville, Ky.

Book mark: J 1598 Ky

Falconer

(361) *Copyist.*

Tyler, James

P, Co. B, 13 U.S.C.H.A. Regt

2 Enclosures.

Bed Cards	Descriptive Lists
Burial Records	Final Statements
Certs. of Dis. for Discharge	Furloughs
C. M. Charges	Med. Des. Lists
Med. Certificates	Orders

Enlistments 1

Other papers relating to—

Admission to Hosp'l	Furlough
Casualty Sheet (Officer's)	Med. Examination
Confinement	Misc. Information /
Contracts	Pay or Clothing
Death or Effects	Personal Reports
Desertions	Rank
Discharge from Hosp'l	Transfer to Hosp'l
Discharge from Service	Transfer to V. R. C.
Duty	Transportation

MICROFILM PUBLICATION M 1834

COMPILED MILITARY SERVICE RECORDS
OF VOLUNTEER UNION SOLDIERS WHO SERVED WITH
THE UNITED STATES COLORED TROOPS (USCT)
13TH REGIMENT OF HEAVY ARTILLERY

PERSONAL PAPERS' TARGET SHEET

PLEASE NOTE THE CHECKED INFORMATION ABOUT THE PERSONAL PAPERS IN THIS FILE:

☐ NO PERSONAL PAPERS WERE FOUND IN THIS FILE WHEN THE RECORDS WERE ARRANGED FOR MICROFILMING.

☒ 3 PERSONAL PAPER(S) FOUND IN THIS FILE WHEN THE RECORDS WERE ARRANGED FOR MICROFILMING.

DECLARATION OF RECRUIT.

I, James Lyles, of Trigg Co. Ky. desiring to volunteer as a soldier in the ARMY OF THE UNITED STATES, for the term of *Three Years*, DO DECLARE That I am 35 years and ..... months of age; that I have never been discharged from the United States service on account of disability or by sentence of a court-martial, or by order before the expiration of a term of enlistment; and I know of no impediment to my serving honestly and faithfully as a soldier for three years.

GIVEN at Paducah Ky. McCracken Co.

the 20th day of Dec 1864

Witness:

Jno. P. Howard

James X Lyles
his mark

Volunteered at Paducah Ky. No. Thirteen
By Capt Howard
December 20th 1864
Pvt Co K 3d Regt U.S. Col'd Cav'y

Pass to Lyles Co K 3d Regt U.S. Col'd Cav'y
Paducah Ky
Dec 20th 1864
Lyles
Pvt Co K 3d Regt U.S. Col'd Cav'y
Paducah Ky
Dec 20th 1864

Consent of Parent or Guardian in case of a Minor, if a Free Man, or in the case of a Slave, of the Person to whom he owes Service:

I, ... DO CERTIFY, That I am

the .....

.....

that the said ..... is ..... years of age; and I do freely give my CONSENT to his volunteering as a SOLDIER in the Army of the United States, for the period of THREE YEARS, under the conditions of the laws of the United States.

GIVEN at .....

the ..... day of .....

Witness:

.....

.....

(A. G. O. No. 74 & 76.)

NOTE 1.—This blank will be used for enlistments of United States colored troops. They will be made out in duplicate in all cases—one to accompany the return of the superintendent (not the recruiting officer) to the Adjutant General, and one to accompany the accounts of the officer who pays bounty, &c.

NOTE 2.—An enlistment holds to service. A muster-in must, in all cases, precede payment of pay, bounty, pension, &c. A muster-in roll, must in all cases, be filed in the Adjutant General's Office as evidence of muster-in. The mustering officer, commissary, or assistant commissary of musters, as the case may be, will countersign both enlistments as having mustered the soldiers into the service of the United States before either of them is given to the disbursing officer.

UNITED STATES COLORED TROOPS ENLISTMENT.

STATE OF Kentucky TOWN OF accredited to Trigg Co

I, James Tyler born in Trigg Co

in the State of Kentucky aged Thirty Five years

and by occupation a Farmer Do HEREBY ACKNOWLEDGE to

have volunteered Twentieth day of December 1864

to serve as a **Soldier** in the **Army of the United States of America,** for the period of THREE YEARS, unless sooner discharged by proper authority: Do also agree to accept such bounty, pay, rations, and clothing, as are, or may be, established by law for the U. S. colored troops.

And I, James Tyler, of Trigg Co. Ky.

do solemnly swear that I will bear true faith and allegiance to the **United States of America,** and that I will serve them honestly and faithfully against all their enemies or opposers whomsoever; and that I will observe and obey the orders of the President of the United States, and the orders of the officers appointed over me, according to the Rules and Articles of War.

Sworn and subscribed to, at Paducah, Ky.
this 20th day of Decr. 1864
Before Capt. John H. Morgan

James his × Tyler mark

I CERTIFY, ON HONOR, That I have carefully examined the above named Volunteer agreeably to the General Regulations of the Army, and that, in my opinion, he is free from all bodily defects and mental infirmity, which would in any way disqualify him from performing the duties of a soldier.

S M Deslo

EXAMINING SURGEON.

I CERTIFY, ON HONOR, That I have minutely inspected the Volunteer, James Tyler previously to his enlistment, and that he was entirely sober when enlisted; that, to the best of my judgment and belief, he is of lawful age; and that, in accepting him as duly qualified to perform the duties of an able-bodied soldier, I have strictly observed the regulations which govern the recruiting service. This soldier has Brown *eyes*, Blk *hair*, Brown *complexion*, is Five *feet* Six *inches* high.

RECRUITING OFFICER OR AGENT.

Mustered into the United States Service 20th day of Decr. 1864

Jno H Morgan
Capt. & Prov. Mar. 1st Mustering Officer.
1st. Dist. of Ky.

Mustered into the service of the United States, for three years or during the war, from date of enlistment, in Company "B"
of U.S. Col'd Artly. (Ky) Volunteers, on the 20th day of December, 1864, at Paducah, Ky.

Capt. & Prov. Marshal
1st. Dist. of Ky.

ENDORSEMENT.

No. 1421

Application of

J K Tyler

of Ladiz Trigg Co

for compensation for service of Slave

James Tyler

enlisted December 8th 1864

in B Co. 13th Regiment,

U. S. Colored Troops.

War Department,

ADJUTANT GENERAL'S OFFICE,

Washington, Mar 7 1867.

Respectfully returned to the Commission for the State of Kentucky, with the information that James Tyler was enlisted at Paducah Ky December 20 1864 and was mustered in as private in Co. "B." 13th U.S.C. Art'y Ky. Dec 20, 1864.

J. 15-98 Ky

Asst. Adj't General.

13 AS

Received, July 1 1867

compensation awarded

186

Dollars.

President Board of Claims.

P. O. Address of Applicant:

Ladiz Trigg Co

Locke Bekret & Co

Attorney for Claimant.

Louisville

Ky

PROOF OF OWNERSHIP.

STATE OF KENTUCKY,

COUNTY OF Trigg } ss.

ON THIS 23 day of November 1866, personally appeared before me, the undersigned, Clerk of the County Court in and for the County and State aforesaid, Robert A Baker, a citizen of of the town of Cadiz, County and State aforesaid, and James E Thompson a citizen of, the Town, County and State aforesaid, both of whom I certify to be respectable and worthy of credit, and after being duly sworn according to law, on oath state that they have examined the claim of R S E Tyler, for pay for James Tyler a slave Enlisted into the service of the U. S., that they are and have been for many years personally acquainted with R S E Tyler, the applicant. That the said James Tyler slave belonged to and was the legal property of R S E Tyler, the said claimant, and was so at the alleged time of Enlistment

R. D. Baker
J E Thompson.

Sworn to and subscribed before me, this 23rd day of Nov 1866

C C Hooks clk
Trigg Co Court

State of Kentucky,

County of Trigg } ss.

I, Robert A Baker, a citizen of The Town of Cadiz County and State aforesaid, and I, James E Thompson, citizen of the Town County and State aforesaid, state that we have known R S E Tyler for 30 years, that he is a resident of Trigg, County and State aforesaid, and that he (or she) has firmly and faithfully maintained his (or her) adherence and allegiance to the government of the United States, by defending its cause against the government and forces of the so-called Confederate States of America, in all suitable and practicable ways according to his or her ability and opportunity.

R D Baker
J E Thompson

Sworn to and subscribed before me, this 23rd day of November 1866.

C C Hooks clk
Trigg Co Court

If the affidavit is made before a magistrate, the official character of the magistrate must be authenticated by the proper clerk. If the claimant has a bill of sale from a previous owner, it must accompany the application.

Claim for Compensation for Slave.

No. ——

I, R. K. Tyler. a loyal citizen and a resident of

County of Trigg State of Kentucky

hereby claim Compensation under the provisions of Section 24, Act approved February 24, 1864, and Section 2, Act approved July 28, 1866, for my Slave James. Tyler. enlisted in the 13th Heavy Artillery Regiment United States Colored Troops, Company B, certificate of which enlistment and descriptive roll,

And Recruiting Officer

as required, accompany this application. In proof of my loyalty to the Constitution and Government of the United States, I present the accompanying Oath, which I have taken, signed and acknowledged; to be filed with this application, in accordance with requirements of General Orders No. 329, 1863, War Department, Adjutant General's Office. Cooke Barnett & Co are my legally authorized agents for the collection of this claim

Witness
S. G Barnett
Jno. Ulrich

R. K. Tyler)

November 23rd 1866

OATH OF ALLEGIANCE.

I, R. K. Tyler the owner and claimant, do solemnly swear the foregoing claim is a just and true claim due to me as [illegible]

and that the facts alleged in said claim in respect to the enlistment of said Slave into the military service of the United States are true. And I do further swear that I have never joined, *or been concerned in, any insurrection* or rebellion; *that I have never borne arms* against the United States; *that I have never given any aid, countenance, counsel or encouragement*, to any person or persons engaged, or whom I had reason to believe were about to engage, in insurrection, rebellion, or armed hostility *against* the United States; that I have never sought nor accepted, nor attempted to exercise the functions of any office, civil or military, nor to perform any service whatever under any authority or pretended authority in hostility to the United States; that I have not yielded a voluntary support to any insurrection, rebellion or pretended government, authority, power or constitution within the United States, hostile thereto. And I do further swear that to the best of my knowledge and ability, I have supported and defended and will continue to support and defend the United States, *against all enemies, foreign and domestic; and that I have supported, defended and obeyed, and will continue to support, defend and obey, the Constitution and Laws of the United States;* that I will bear true faith and allegiance to the same; and that I take this Oath freely, without any mental reservation or purpose of evasion: So help me God.

R. K. Tyler)

Sworn to and subscribed before me at [illegible] this 23 day of 1866

[illegible]
Deputy Clerk

3128

Tyler. Richard

Co a, 13 U.S.Col'd H. Art'y.

Private	Artificer

CARD NUMBERS.

1	5-5-19836	26	
2	5-5-19968	27	
3	5-5-20103	28	
4	5-5-20149	29	
5	5-5-20324	30	
6	5-5-20474	31	
7	9127947	32	
8	43135999	33	
9		34	
10		35	
11		36	
12		37	
13		38	
14		39	
15		40	
16		41	
17		42	
18		43	
19		44	
20		45	
21		46	
22		47	
23		48	
24		49	
25		50	

Book Mark:

See also

9 | 13 H. Art'y. | U.S.C.T.

Richard Taylor

....., Co. C, 13 Reg't U. S. Col'd H. Art'y.

Appears on

Company Descriptive Book

of the organization named above.

DESCRIPTION.

Age 36 years; height 5 feet 9½ inches.

Complexion Lt Brown

Eyes Brown; hair Brn

Where born Fairfax Co Va

Occupation Blacksmith

ENLISTMENT.

When Sept 11, 1864.

Where Fairfax Court House

By whom Capt Peters; term 3 y'rs.

Remarks:

Deserted

(383*g*) **Copyist.**

I | 13 K. A. | U.S.C.T.

Richard Tyler

Appears with rank of Pvt on

Muster and Descriptive Roll

of a Detachment of U.S. Colored Recruits forwarded for 13 Regt U.S. Colored H. Artly. Roll dated Bowling Green Ky, Oct 31, 1864.

Where born Trigg Co Ky

Age 36 years; occupation Blacksmith

When enlisted Oct 17, 1864.

Where enlisted B Green Ky

For what period enlisted 3 years.

Eyes brown; hair Blk

Complexion Lt brown; height 5 ft. 3 1/2 in.

When mustered in ____, 186 .

Where mustered in ____

Bounty paid $ ____ 100; due $ ____ 100

Clothing account:

Last settled ____, 186 ; drawn since $18 30/100

Date of first muster Oct 17, 1864.

Company to which assigned ____

Remarks: New recruit Christian Co. owed Service to Richard Tyler

Book mark : ____

G. A. Wash

(356m) **Copyist.**

F | 13 H. Art'y. | U.S.C.T.

Richard Taylor

Pvt., Co. A, 13 Reg't U. S. Col'd H. Art'y.

Age ..... years.

Appears on

Company Muster Roll*

for to Dec 31, 1864.

Joined for duty and enrolled:

When Oct 1st, 1864.

Where Bowling Green Ky

Period 3 years

Mustered in:

When Oct 1st, 1864.

Where Bowling Green Ky

Present or absent Present

Stoppage, $ 100 for .....

Due Gov't, $ 100 for .....

Valuation of horse, $ 100

Valuation of horse equipments, $ 100

Remarks: .....

* First current roll. No muster-in roll of this company on file.

Book mark: .....

W. D. Hughes

(3586) Copyist.

F | 13 H. Art'y. | U.S.C.T.

Richard Taylor

Pvt., Co. A, 13 Reg't U. S. Col'd H. Art'y.

Appears on

Company Muster Roll

for Jan & Feb, 186 5.

Present or absent Present

Stoppage, $ 100 for

Due Gov't, $ 100 for

Valuation of horse, $ 100

Valuation of horse equipments, $ 100

Remarks: Due $40 first installment of Gov Bounty

Book mark:

W. A. Hughes

Copyist.

(358)

I | 13 H. Art'y. | U.S.C.T.

Richard Taylor

Sgt, Co. A, 13 Reg't U. S. Col'd H. Art'y.

Appears on

Company Muster Roll

for Mch & Apr, 186 5.

Present or absent Present

Stoppage, $ 100 for

Due Gov't, $ 100 for

Valuation of horse, $ 100

Valuation of horse equipments, $ 100

Remarks:

Book mark:

W. D. Hughes
Copyist.

(358)

F | 13 H. Art'y. | U.S.C.T.

Richard Tyler

Artf, Co. A, 13 Reg't U. S. Col'd H. Art'y.

Appears on

Company Muster Roll

for May & June, 186 5.

Present or absent Present

Stoppage, $ 100 for

Due Gov't, $ 100 for

Valuation of horse, $ 100

Valuation of horse equipments, $ 100

Remarks: 1st Installment Bounty due

FROM SECOND AUDITOR'S ROLL.

Book mark:

W. J. Hughes

Copyist.

G | **13** H. Art'y. | **U.S.C.T.**

Richard Taylor

Artf, Co. A, 13 Reg't U. S. Col'd H. Art'y.

Appears on

Company Muster Roll

for July & Aug, 186 5.

Present or absent Present

Stoppage, $ 100 for

Due Gov't, $ 100 for

Valuation of horse, $ 100

Valuation of horse equipments, $ 100

Remarks:

Due 1 Installment Govt Bounty $100

NEXT ROLL ON FILE MUSTER OUT.

Book mark:

W. T. Hughes

Copyist.

(358)

I | **13** H. Art'y. | **U.S.C.T.**

Richard Tyler

Artf's Co. A, 13 Reg't U. S. Col'd H. Art'y.

Appears on **Co. Muster-out Roll,** dated Louisville Ky, Nov. 18, 186 5.

Muster-out to date Nov 18, 186 5.

Last paid to June 30, 186 5.

Clothing account:

Last settled ....., 186 ; drawn since $ 100

Due soldier $ 19 35/100; due U. S. $ 100

Am't for cloth'g in kind or money adv'd $ 100

Due U. S. for arms, equipments, &c., $ 100

Bounty paid $ 100 00/100; due $ 100

Remarks: age 36 yrs

Book mark: V 245 P. 254. 77
311010

W. G. Hughes

(361) *Copyist.*

Tyler, Richard

B, Co. A, 13 Regt. U.S.C.H.A.

/ Enclosures.

Bed Cards	Descriptive Lists
Burial Records	Final Statements
Certs. of Dis. for Discharge	Furloughs
C. M. Charges	Med. Des. Lists
Med. Certificates	Orders /

Other papers relating to—

Admission to Hosp'l	Furlough
Casualty Sheet (Officer's)	Med. Examination
Confinement	Misc. Information
Contracts	Pay or Clothing
Death or Effects	Personal Reports
Desertions	Rank
Discharge from Hosp'l	Transfer to Hosp'l
Discharge from Service	Transfer to V. R. C.
Duty	Transportation

Post Head-Quarters,
Smithland, Ky.,
June 19, 1865.

Special Orders,
No. 43.

II. Private Richard Tyler, Co. "A"
1st U.S.Lt.H.A., is hereby detailed from his command,
for duty as Blacksmith, and will report, without
delay, to Lt. E. Crawford, A.A.A.G., for instructions.

By order of
Lt. Col. J. T. Foster,
Commanding Post.

H. E. Smith
1st Lt. Post Adjutant.

C.O. 1st U.S.H.A.

2129

Underwood Hiram

Co G, 13 U.S.Col'd H. Art'y.

Private	Private

CARD NUMBERS.

1	5551837 4	26	
2	5551797 8	27	
3	5552351 2	28	
4	555236 59	29	
5	5552380 4	30	
6	9129089	31	
7		32	
8		33	
9		34	
10		35	
11		36	
12		37	
13		38	
14		39	
15		40	
16		41	
17		42	
18		43	
19		44	
20		45	
21		46	
22		47	
23		48	
24		49	
25		50	

Book Mark:

See also 121 U.S.C. Inf.

S 10 10 33 10 Comm.

S 1450 419 00 W

S 1533 12 E 80 ft

N 155 06 56 E 80 ft

S 2478815 and W. 80

D. J. Miller & Co.

U | 13 H. Art'y. | U.S.C.T.

Hiram Underwood

....., Co. G....., 13 Reg't U. S. Col'd H. Art'y.

Appears on

Company Descriptive Book

of the organization named above.

DESCRIPTION.

Age 27 years; height 5 feet 9 inches.

Complexion Dark

Eyes Blk; hair Blk

Where born Mason Co Ky

Occupation Farmer

ENLISTMENT.

When Oct 1, 1864.

Mustered Oct 1'64

Where Greenupsb'g Ky

By whom Capt W C Gwin; term 3 y'rs.

Remarks:

Beck

(383*g*) **Copyist.**

EL | 13 H. Art'y. | U.S.C.T.

Hiram Underwood

Art, Co. G, 13 Reg't U. S. Col'd H. Art'y.

Appears on

M. and D. Roll of Men Transferred

to the organization named above,

from Co. A, 121 U.S. Col'd Inf'y

Roll dated Camp Nelson Ky. June 23, 1865.

When enlisted Oct 1, 1864.

Period for which enlisted 3 years.

When mustered in Oct 1, 1864.

Present or absent Not stated

Company to which assigned

Remarks:

Book mark:

(342) *Copyist.*

Hiram Underwood

Pvt., Co. ....., 13 Reg't U. S. Col'd H. Art'y.

Appears on

M. and D. Roll of Men Transferred

to the organization named above,

from Co....., 121 Reg't U. S. Colored Infantry.

Roll dated June 23, 1865.

When enlisted Oct. 1, 1864.

Period for which enlisted 3 years.

When mustered in Oct. 1, 1864.

Present or absent Not stated

Company to which assigned G

Remarks: Credited to Mason

Co. 9 D. Ky.

Book mark :

C. Williams

Copyist.

U | 13 H. Art'y. | U.S.C.T.

Hiram Underwood
Pvt., Co. G, 13 Reg't U. S. Col'd H. Art'y.

Age ..... years.

Appears on

Company Muster Roll*

for from June 23 to 30, 1865.

Joined for duty and enrolled:

When Oct. 1, 1864.

Where Greensboro, Ky

Period 3 years

Mustered in:

When Oct. 1, 1864

Where Greensboro, Ky.

Present or absent Present

Stoppage, $ 100 for .....

Due Gov't, $ 100 for .....

Valuation of horse, $ 100

Valuation of horse equipments, $ 100

Remarks: .....

* First current roll. No muster-in roll of this company on file.

Book mark: .....

(3586) H. Anderson
Copyist.

11 | 13 H. Art'y. | U.S.C.T.

Hiram Underwood,
Pvt, Co. G, 13 Reg't U. S. Col'd H. Art'y.

Appears on

Company Muster Roll

for July & Aug, 1865.

Present or absent Present

Stoppage, $ 100 for

Due Gov't, $ 100 for

Valuation of horse, $ 100

Valuation of horse equipments, $ 100

Remarks:

NEXT ROLL ON FILE MUSTER OUT.

Book mark:

W. Anderson
Copyist.

U | **13 H. Art'y.** | **U.S.C.T.**

Hiram Underwood

Priv., Co. G, 13 Reg't U. S. Col'd H. Art'y.

Appears on **Co. Muster-out Roll,** dated Louisville, Ky, Nov 18, 1865.

Muster-out to date Nov 18, 1865.

Last paid to June 30, 1865.

Clothing account:

Last settled ....., 186 ; drawn since $ 100

Due soldier $ ..... 100; due U. S. $ 6 84/100

Am't for cloth'g in kind or money adv'd $ 100

Due U. S. for arms, equipments, &c., $ 100

Bounty paid $ 100 00/100; due $ 100

Remarks: .....

.....

.....

.....

.....

.....

Book mark: .....

A W Allen

(361) *Copyist.*

2129-a

Underwood Robt M

H. A.

Co 96, 13 U.S. Col'd Troops.

1 Lieut

CARD NUMBERS.

1	26
2	27
3	28
4 Reference envelope	29
5	30
6	31
7	32
8	33
9	34
10	35
11	36
12	37
13	38
14	39
15	40
16	41
17	42
18	43
19	44
20	45
21	46
22	47
23	48
24	49
25	50

Number of personal papers herein.....

Book Mark:.....

See also 120 U.S.C.T.

2130

Wyss Killiam

Co D, 13 U.S.Col'd H. Art'y.

Private	Private

CARD NUMBERS.

1 5 5 1 7 2 4 9	26
2 5 5 2 2 3 6 6	27
3 5 5 2 2 5 1 4	28
4 9 1 2 8 6 1 7	29
5	30
6	31
7	32
8	33
9	34
10	35
11	36
12	37
13	38
14	39
15	40
16	41
17	42
18	43
19	44
20	45
21	46
22	47
23	48
24	49
25	50

Book Mark:

See also

U. | 13 H. Arty | **U.S.C.T.**

William Upshaw

....., Co. D, 13 Reg't U. S. Col'd H. Arty

Appears on

Company Descriptive Book

of the organization named above.

DESCRIPTION.

Age 23 years; height 5 feet 5 inches.

Complexion Blk

Eyes Blk; hair Blk

Where born Henderson Kentucky

Occupation Farmer

ENLISTMENT.

When Nov 22, 1864.

Where Henderson Ky

By whom Capt Billings; term 3 y'rs.

Remarks: .....

Deserted

(383y) **Copyist.**

N. | 13 H. Art'y. | U.S.C.T.

William Upp

Appears with rank of Pvt on

Muster and Descriptive Roll of a Detachment of U. S. Vols. ~~forwarded~~ organized

for the 13 Reg't U. S. Col'd H. Art'y. Roll dated

Not Dated, , 186 .

Where born Henderson, Kentucky

Age 23 y'rs; occupation Farmer

When enlisted May 14, 1863.

Where enlisted Henderson, Ky.

For what period enlisted 3 years.

Eyes Blk; hair Blk

Complexion Blk; height 5 ft. 5 in.

When mustered in May 23, 1863.

Where mustered in Owensboro, Ky.

Bounty paid $ 100; due $ 100

Where credited 2 Cong. Dist. Ky.

Company to which assigned D

Remarks: Transferred from 120 Regt. U.S.C.T.

Book mark :

(339)

Copyist.

A | 13th C | U.S.C.T.

Virginia Ingram

Pvt, Co. D, 13 Reg't U. S. Col'd 4th C.

Appears on

Company Muster Roll

for May & June, 1865.

Present or absent Present

Stoppage, $ 100 for

Due Gov't, $ 100 for

Valuation of horse, $ 100

Valuation of horse equipments, $ 100

Remarks: Has received pro Bd. Bounty. Transferred from Co B 120 Regt U.S.C.I. June 23, 1865. Absent in Hospital at Jeffersonville Indiana Due 1st Installment Govt Bounty

FROM SECOND AUDITOR'S ROLL.

NEXT ROLL ON FILE MUSTER OUT.

Book mark:

L. Ger

(358) *Copyist.*

U | **13 H. Art'y.** | **U.S.C.T.**

William Upps

Pvt., Co. D, 13 Reg't U. S. Col'd H. Art'y.

Appears on **Co. Muster-out Roll,** dated Louisville Ky., Nov 18, 1865.

Muster-out to date Nov 18, 1865.

Last paid to* Pay due from Enl., 186 .

Clothing account:

Last settled....., 186 ; drawn since $.....100

Due soldier $ 3 69 100; due U. S. $.....100

Am't for cloth'g in kind or money adv'd $.....100

Due U. S. for arms, equipments, &c., $.....100

Bounty paid $ 100 100; due $.....100

Remarks:.....

.....

.....

.....

.....

*Conscript

Book mark:.....

---

(361)

Copyist.

2131

Van Buren Martin

Co H, 13 U.S.Col'd H. Art'y.

Private	Private

CARD NUMBERS.

1	5518539	26	
2	5517980	27	
3	5523959	28	
4	5524113	29	
5	5524258	30	
6	9129230	31	
7		32	
8		33	
9		34	
10		35	
11		36	
12		37	
13		38	
14		39	
15		40	
16		41	
17		42	
18		43	
19		44	
20		45	
21		46	
22		47	
23		48	
24		49	
25		50	

Book Mark:

See also 12/1160 Dyk.

S780535—R040
S875/59
A.y. 1250855

D. F. Miller & Co.

U | **13 H. Art'y.** | **U.S.C.T.**

Martin Van Buren

....., Co. H, 13 Reg't U. S. Col'd H. Art'y.

Appears on

Company Descriptive Book

of the organization named above.

DESCRIPTION.

Age 22 years; height 5 feet 3 inches.

Complexion Black

Eyes Blk; hair Blk

Where born Bath Co Ky

Occupation Laborer

ENLISTMENT.

When Nov 10, 1864.

Where Greensburg Ky

By whom Capt Grier; term 3 y'rs.

Remarks:

J Beck

(383*g*) **Copyist.**

71 | 13 H. Art'y. | U.S.C.T.

Martin Van Buren

Art., Co. N, 13 Reg't U. S. Col'd H. Art'y.

Appears on

M. and D. Roll of Men Transferred

to the organization named above,

from Co. B, 121 Reg't U. S. Colored Infantry.

Roll dated Camp Nelson, Ky. June 23, 1865.

When enlisted Oct 10, 1864.

Period for which enlisted 3 years.

When mustered in Oct 10, 1864

Present or absent Not stated

Company to which assigned

Remarks:

Book mark:

C Rodenbaugh

(342) *Copyist.*

2 | 13 H. Art'y. | U.S.C.T.

Martin Van Buren

Pvt., Co. ....., 13 Reg't U. S. Col'd H. Art'y.

Appears on

M. and D. Roll of Men Transferred

to the organization named above,

from Co....., 121 Reg't U. S. Colored Infantry.

Roll dated June 23, 1865

When enlisted Nov 10, 1864

Period for which enlisted 3 years.

When mustered in Nov 10, 1864

Present or absent Not stated

Company to which assigned G.

Remarks: Credited to Bath

Co. 9 D. Ky.

Book mark :

C. Williams,

Copyist.

13th A. | U.S.C.T.

Martin Van Buren

Pvt., Co. C, 13 Reg't U. S. Col'd Inf.

Age ..... years.

Appears on

Company Muster Roll*

for May June, 1865.

Joined for duty and enrolled:

When Nov 10, 1864.

Where Lumpkins Co Ga

Period 3 years.

Mustered in:

When Nov 10, 1864.

Where Lumpkins Co Ga

Present or absent Present

Stoppage, $ 100 for

Due Gov't, $ 147/100 for Clo. Eqip Cost

Valuation of horse, $ 100

Valuation of horse equipments, $ 100

Remarks:

* First current roll. No muster-in roll of this company on file.

Book mark:

(3584) *Copyist.*

7 | 13 H. Art'y. | U.S.C.T.

Martin Van Buren

Pvt, Co. H, 13 Reg't U. S. Col'd H. Art'y.

Appears on

Company Muster Roll

for July ~ Aug, 1865.

Present or absent Present

Stoppage, $ 100 for

Due Gov't, $ 100 for

Valuation of horse, $ 100

Valuation of horse equipments, $ 100

Remarks: due U.S. for Cavalry Equipments 47

NEXT ROLL ON FILE MUSTER OUT.

Book mark:

(358) *Copyist.*

13 H. Art'y. | U.S.C.T.

Martin VanBuren

A, Co. H, 13 Reg't U. S. Col'd H. Art'y.

Appears on **Co. Muster-out Roll,** dated Louisville Ky, Nov 18, 1865.

Muster-out to date Nov 18, 1865.

Last paid to June 30, 1865.

Clothing account:

Last settled ....., 186 ; drawn since $ 100

Due soldier $ ..... 100 ; due U. S. $ 17 56/100

Am't for cloth'g in kind or money adv'd $ 100

Due U. S. for arms, equipments, &c., $ 100

Bounty paid $ 100 ..... 100 ; due $ 100

Remarks: .....

Book mark: .....

H Schmick

(361) *Copyist.*

2132

Van Dyke John

Co M, 13 U.S.Col'd H. Art'y.

Private	Private

CARD NUMBERS.

1 6 5 5 1 9 1 4 8	26
2 6 5 5 1 8 8 5 5	27
3 5 5 2 5 6 5 8	28
4 5 5 2 5 8 0 4	29
5 5 5 2 5 9 5 7	30
6 9 1 2 9 6 6 8	31
7	32
8	33
9	34
10	35
11	36
12	37
13	38
14	39
15	40
16	41
17	42
18	43
19	44
20	45
21	46
22	47
23	48
24	49
25	50

Book Mark:

See also 12 U.S.C. Inf.

A29953290 acsd

D. D. Miller, Ex.

W 1, 3 Hvy U.S.C.T.

John Sandusky

....., Co. M, 13 Reg't U. S. Col'd H'vy

Appears on

Company Descriptive Book

of the organization named above.

DESCRIPTION.

Age 20 years; height 5 feet 7½ inches.

Complexion Dk

Eyes Dk; hair Dk

Where born Spencer Co. Ky

Occupation Farmer

ENLISTMENT.

When Aug. 22, 1863.

Where Louisville Ky

By whom Capt. Tomack, term 3 y'rs.

Remarks: Died Sept. 13/63

E. H. Sifscomb

(383*g*) Copyist.

V | 13 H. Art'y. | U.S.C.T.

John Vandyke

Pvt., Co....., 13 Reg't U. S. Col'd H. Art'y.

Appears on

M. and D. Roll of Men Transferred

to the organization named above,

from 72 U. S. C. I

Roll dated July 3, 1865.

When enlisted Apl. 22, 1865.

Period for which enlisted 3 years.

When mustered in Apl 22, 1865.

Present or absent Not Stated

Company to which assigned L

Remarks:

4 Dist. Ky

Book mark:

J Hudson

(342) *Copyist.*

9 | 13 H. Art'y. | U.S.C.T.

John Van Dyke

Pvt., Co. M, 13 Reg't U. S. Col'd H. Art'y.

Appears on

M. and D. Roll of Men Transferred

to the organization named above,

from U.S.R.

Roll dated July 3, 186 5.

When enlisted Apl 22, 186 5.

Period for which enlisted 3 years.

When mustered in Apl 22, 186 5.

Present or absent Not Stated

Company to which assigned

Remarks: Credited to

2d D. Ky

Book mark :

J Hammond

(342) *Copyist.*

v | 13 H. Art'y. | U.S.C.T.

John Van Dyke

Pvt, Co. M, 13 Reg't U. S. Col'd H. Art'y.

Age ..... years.

Appears on

Company Muster Roll*

for June 23 to 30, 1865.

Joined for duty and enrolled:

When Ap 22, 1865.

Where Louisville Ky

Period 3 years

Mustered in:

When Ap 22, 1865.

Where Louisville Ky

Present or absent Present

Stoppage, $ 100 for .....

Due Gov't, $ 100 for .....

Valuation of horse, $ 100

Valuation of horse equipments, $ 100

Remarks: .....

* First current roll. No muster-in roll of this company on file.

Book mark: .....

A. B. Good

(3586) Copyist.

V | 13 H. Art'y. | U.S.C.T.

John Van Dyke

Pvt., Co. M, 13 Reg't U. S. Col'd H. Art'y.

Appears on

Company Muster Roll

for July & Aug, 1865.

Present or absent Present

Stoppage, $ 100 for

Due Gov't, $ 100 for

Valuation of horse, $ 100

Valuation of horse equipments. $ 100

Remarks :

NEXT ROLL ON FILE MUSTER OUT.

Book mark :

Abbott

(358) Copyist.

V | 13 H. Art'y. | U.S.C.T.

John VanDyke

Pvt., Co. M, 13 Reg't U. S. Col'd H. Art'y.

Appears on **Co. Muster-out Roll,** dated Louisville Ky, Nov 18, 1865.

Muster-out to date ....., 186 .

Last paid to June 30, 1865.

Clothing account:

Last settled ....., 186 ; drawn since $ 100

Due soldier $ ....100; due U. S. $ 100

Am't for cloth'g in kind or money adv'd $ 100

Due U. S. for arms, equipments, &c., $ 100

Bounty paid $ 100 100; due $ 100

Remarks: Died Sept 13-65 Camp Nelson Ky Gen Hosp. Typhoid Fever. Final Statement furnished

Book mark: V 243 P 176-77 2 and 547 - Apl 13-66

A860A

(861) *Copyist.*

Vandyke Johnson

_____, Co. _____, _____ Reg't M. S. U. S. V.

1 **Enclosures.**

Bed Cards	Final Statements
Burial Records	Furloughs or L. of A
Certs. of Dis. for Discharge	Med. Certificates
C. M. Charges	Med. Des. Lists
Descriptive Lists	Orders
Discharge Certificates	Pris. of War Record
Enlistment Papers 1	Resignations

Other papers relating to—

Admission to Hosp'l	Furlough or L. of A
Casualty Sheet	Med. Examination
Confinement	Misc. Information
Contracts	Pay or Clothing
Death or Effects	Personal Reports
Desertion	Rank
Discharge from Hosp'l	Transfer to Hosp'l
Discharge from Service	Transfer to V. R. C.
Duty	Transportation

Van Dyke, John

P, Co. M, 13 U.S.C.T. A Reg't

2 **Enclosures.**

Bed Cards	Descriptive Lists
Burial Records	Final Statements /
Certs. of Dis. for Discharge	Furloughs
C. M. Charges	Med. Des. Lists
Med. Certificates	Orders

Other papers relating to—

Admission to Hosp'l	Furlough
Casualty Sheet (Officer's)	Med. Examination
Confinement	Misc. Information
Contracts	Pay or Clothing
Death or Effects /	Personal Reports
Desertions	Rank
Discharge from Hosp'l	Transfer to Hosp'l
Discharge from Service	Transfer to V. R. C.
Duty	Transportation

DECLARATION OF RECRUIT.

I, ... John Vandyke ..... desiring to volunteer as a soldier in the ARMY OF THE UNITED STATES, for the term of *Three Years*, DO DECLARE That I am ..... 20 ..... years and ..... months of age; that I have never been discharged from the United States service on account of disability or by sentence of a court-martial, or by order before the expiration of a term of enlistment; and I know of no impediment to my serving honestly and faithfully as a soldier for three years.

GIVEN at ..... Louisville Ky. .....

the ..... 22 ..... day of ..... April 1865.

Witness:

Geo. O. Cole.

John X Vandyke.
his mark

No. 95

Volunteered at Louisville Ky.

April 22 1865,

By G. B. Myers

Capt. 22d Regt

1-Dragoons

Louisville Ky

Apr. 22 1865

Consent of Parent or Guardian in case of a Minor, if a Free Man, or in the case of a Slave, of the Person to whom he owes Service:

I, ... DO CERTIFY, That I am

the ....

....

that the said ..... is .... years of age; and I do freely give my CONSENT to his volunteering as a SOLDIER in the Army of the United States, for the period of THREE YEARS, under the conditions of the laws of the United States.

GIVEN at .....

the ..... day of .....

Witness:

....

(A. G. O. No. 74 & 76.)

NOTE 1.—This blank will be used for enlistments of United States colored troops. They will be made out in duplicate in all cases—one to accompany the return of the superintendent (not the recruiting officer) to the Adjutant General, and one to accompany the accounts of the officer who pays bounty, &c.

NOTE 2.—An enlistment holds to service. A muster-in must, in all cases, precede payment of pay, bounty, pension, &c. A muster-in roll, must in the Adjutant General's Office as evidence of muster-in. The mustering officer, commissary, or assistant commissary of musters, as the case may be, will countersign both enlistments as having mustered the soldiers into the service of the United States before either of them is given to the disbursing officer.

UNITED STATES COLORED TROOPS ENLISTMENT.

STATE OF Kentucky TOWN (leaving) OF Spencer

I, John Vandyke born in Spencer

in the State of Kentucky aged 20 years

and by occupation a Farmer Do HEREBY ACKNOWLEDGE to

have volunteered 22 day of April 186 5

to serve as a **Soldier** in the **Army of the United States of America,** for the period of THREE YEARS, unless sooner discharged by proper authority: Do also agree to accept such bounty, pay, rations, and clothing, as are, or may be, established by law for the U. S. colored troops.

And I, John Vandyke

do solemnly swear that I will bear true faith and allegiance to the **United States of America,** and that I will serve them honestly and faithfully against all their enemies or opposers whomsoever; and that I will observe and obey the orders of the President of the United States, and the orders of the officers appointed over me, according to the Rules and Articles of War.

Sworn and subscribed to, at Louisville Ky

this 22 day of April 186 5

Before G. M. Mumach Capt & Pro. Mar's Dist Ky

his
John X Vandyke
mark

I CERTIFY, ON HONOR, That I have carefully examined the above named Volunteer agreeably to the General Regulations of the Army, and that, in my opinion, he is free from all bodily defects and mental infirmity, which would in any way disqualify him from performing the duties of a soldier.

J. Gardner

EXAMINING SURGEON.

I CERTIFY, ON HONOR, That I have minutely inspected the Volunteer, Vandyke previously to his enlistment, and that he was entirely sober when enlisted; that, to the best of my judgment and belief, he is of lawful age; and that, in accepting him as duly qualified to perform the duties of an able-bodied soldier, I have strictly observed the regulations which govern the recruiting service. This soldier has Blk. *eyes*, Blk. *hair*, Blk. *complexion*, is 5 *feet* 9 1/2 *inches* high.

G. M. Mumach

Pro. Mar's RECRUITING OFFICER OR AGENT.

Mustered into the United States Service 22 day of April 186 5

G. M. Mumach

Pro Mar's *Mustering Officer.*

R Vandyke

Mustered into the service of the United States, for three years or during the war, from date of enlistment, in Company ..... Regiment of ..... Volunteers, on the ..... day of ..... 186 , at .....

INVENTORY OF THE EFFECTS of John Vandyke

Pvt. Company M 13th Regiment U.S. Col'd H.A.

who died in the Nelson ~~General~~ Post Hospital Camp Nelson Ky

September 13" 1865

~~Hat~~ Cap,	1	Blankets,	1
Dress Coats,		Knapsacks,	1
Overcoats,	1	Canteens,	
Jackets,		Haversacks,	
Trowsers,	1	Muskets,	
Shirts,		Bayonets,	
Drawers,		Cartridge Box,	
Boots, pairs,		Belt,	
Shoes, pairs,		Money,	
Stockings,		Poncho	1

Inventory
of the effects of
of the late Pvt
John Vandyke
Co. M 13th U.S. Col'd Inf.
who died
at Nelson Post
Hospital Sept 13th
1865.
Camp Nelson Ky.

Nelson U. S. Army ~~General~~ Post Hospital,
Camp Nelson Ky Sept 13" 1864.

Commanding Officer M Company,
13th Regt. U.S.C.H.A.

Sir I have to inform you
that Privat John Vanelyke of your Company, died
in this Hospital on the 13th day of September 1864
of Debility

I inclose his ~~descriptive list, with pay and clothing account, and~~ inventory of his effects.

Very respectfully yours, &c.,

A.C. Rankin
A. A. Surgeon U. S. A
In charge of ~~General~~ Post Hospital.

FINAL STATEMENT

OF

John Dan Doyle

13 Reg't of N.Y.Vol.

VOLUNTEERS.

Died Sept 15th 1865

NOTE 1.—*Two* of these certificates (or duplicates) are to be given to each Volunteer Soldier or drafted man who may be discharged without being mustered out (Final Statements are never given to men mustered out of service,) that he may at once receive from the Paymaster the pay, &c., due him, and the captain or other COMMISSIONED officer commanding the company will certify to the act of the delivery of the duplicate certificates; with these certificates the Soldier is "entitled to" his *discharge*, and should also present his discharge to the Paymaster to have the payment endorsed on it. The discharge is to be given back to the Soldier by the Paymaster; the latter only retaining as his vouchers the duplicate certificates.

NOTE 2.—If the Soldier is entitled to pay for the use of his horse, the Company Commander will certify to that fact on the back of both these final statements, and also to the time he has pay due for having been so mounted on his own horse.

NOTE 3.—When a Soldier is furnished with final statements, his descriptive list, if he has one, should be taken up by the officer who gives the Soldier these statements, and endorsed with a statement to this effect by the officer. The endorsement should exhibit a full statement of the time for which the Soldier was allowed pay on his final statements, the clothing account, and all other charges against him or in his favor, so as to comprise a complete exhibit of his account. It will then be transmitted to the Company Commander of the Soldier, who will enter all the data necessary to a full understanding of the Soldier's account on the muster roll upon which the Soldier's discharge is reported. The descriptive list will then be destroyed. The object of this is, that the remaining portion of the Soldier's account may be settled upon the receipt of these muster rolls, and the Soldier receive any pay or allowances that may be due him at the time of his discharge, and which may not appear on his last final statements from the fact that his descriptive list is incomplete. These accounts for back pay, &c., are settled by the 2d Auditor of the Treasury Department.

NOTE 4.—Charges for loss or injury to ordnance, horse equipments, and other miscellaneous charges, should appear under the heading of "Other Stoppages."

NOTE 5.—Bounty paid by State authorities, and not by the United States, will not be entered on this statement.

NOTE 6.—Amounts due the Sutler and Laundress must be entered on the muster roll on which the discharge, death, desertion, &c., is reported, as well as on the final statement, otherwise the amount cannot be collected from the United States.

NOTE 7.—This blank will be used for deceased volunteers and drafted men, as well as for others.

NOTE 8.—Where a Soldier dies in Hospital or on detached service, his descriptive list, if he has one, should be sent with his final statements, in duplicate, to the Adjutant General, Washington, D. C.

NOTE 9.—If the soldier is a drafted man or substitute, the space for time, &c., of enrolled, should contain only the word *drafted* or *substitute*, as the case may be. If the Soldier is a "VETERAN," (or RECRUIT,) the words *as a veteran*, (or *recruit*,) as the case may be, should be interlined after the words *mustered into the service of the U. S.* A statement of all the installments of *Veteran* or *Recruit Bounty* RECEIVED by the Soldier must be made on the back of each final statement.

ADJUTANT GENERAL'S OFFICE.

"Roll" 1865

Duplicate with Inventory sent 2d Auditor.

I certify, on honor, that John Van Loyke Privt of
Lr ~~Captain~~ J. M. Kerr Company "M" of the 18 Regiment of U.S. Vol
VOLUNTEERS, of the State of _____, born in Spencer Co, State
of Kentucky, aged 20 years; 5 feet 7½ inches high; Blk complexion,
Blk eyes, Blk hair, and by occupation a Farmer, who joined for service
and was enrolled (see Note 9) on the 22 day of April, 186 5, at Louisville Ky
by Capt Stonuck, for the period of 3 yrs years, and mustered into
the service of the United States on the 22 day of April, 186 5, at
Louisville Ky, by Capt Stonuck; and having served
HONESTLY and FAITHFULLY with his Company to the present date, is now entitled to a
DISCHARGE by reason of Death, Discharge from Hospital Ky Sept 13. 1865—

The said John Van Loyke was last paid by Paymaster
M. J. Wellenby, to include the 30 day of June, 186 5, and
has pay due him from that time to the present date; he is entitled to pay and subsistence for
TRAVELING to place of enrollment, and whatever other allowances are authorized to volunteer
soldiers, drafted men, or militia, so discharged. He has received from the United States CLOTHING
amounting to $80 54/100 dollars, since the 22 day of April,
186 5, when his clothing account was last settled. He has received from the United States
$ 100/100 dollars advanced BOUNTY.

There is to be stopped from him, on account of the State of _____, or other
authorities, for CLOTHING, &c., received on entering service, _____/100 dollars; and
for other stoppages, viz: No Charges

_____/100 dollars.
He has been furnished with TRANSPORTATION in kind from the place of his discharge to
_____; and he has been SUBSISTED for TRAVELING to his
place of enrollment, up to the _____, 186 .

He is indebted to _____, SUTLER, _____/100 dollars.

He is indebted to _____, LAUNDRESS, _____/100 dollars.

Given in Duplicate, at Louisville Ky, this 2 d day
of December, 1865.

James O. Kerr
1st Lieut
Commanding Company.

[A. G. O. No. 95—First.]

2133

Vanmeter Elijah

Co K, 13 U.S.Col'd H. Art'y.

Private	Private

CARD NUMBERS.

1 16518216	26
2 16517982	27
3 16524910	28
4 16525045	29
5 9129378	30
6	31
7	32
8	33
9	34
10	35
11	36
12	37
13	38
14	39
15	40
16	41
17	42
18	43
19	44
20	45
21	46
22	47
23	48
24	49
25	50

Book Mark:

See also 121 U.S.C. Inf.

U | **13** H. Art'y. | **U.S.C.T.**

Elijah Hammeter

....., Co. K, 13 Reg't U. S. Col'd H. Art'y.

Appears on

Company Descriptive Book

of the organization named above.

DESCRIPTION.

Age 19 years; height 5 feet 7½ inches.

Complexion Black

Eyes Black; hair Black

Where born Clark Co. Ky

Occupation Laborer

ENLISTMENT.

When May 26, 1865.

Where Camp Nelson Ky

By whom Col. Fralick; term 3 y'rs.

Remarks:

E. H. Spaccarelli

(383*g*) *Copyist.*

V | 13 H. Art'y. | U.S.C.T.

Elijah Vanmeter

Pvt., Co. K, 13 Reg't U. S. Col'd H. Art'y.

Appears on

M. and D. Roll of Men Transferred

to the organization named above,

from Co. G. 121

Roll dated Camp Nelson, Ky. June 23, 1865.

When enlisted May 26, 1865.

Period for which enlisted 3 years.

When mustered in June 10, 1865.

Present or absent Not stated

Company to which assigned

Remarks:

Book mark :

Vanmeter

(342) *Copyist.*

V | 13 H. Art'y. | U.S.C.T.

Elijah Van Meter

Pvt., Co. ....., 13 Reg't U. S. Col'd H. Art'y.

Appears on

M. and D. Roll of Men Transferred

to the organization named above,

from Co....., 121 Reg't U. S. Colored Infantry.

Roll dated June 23, 1865

When enlisted May 26, 1865

Period for which enlisted 3 years.

When mustered in Jan. 10, 1865

Present or absent Not stated

Company to which assigned K.

Remarks: Credited to Clark Co. 7 S. Ky.

Book mark :

C. Williams,

Copyist.

V | 13 H. Art'y. | U.S.C.T.

Elijah Vannetter

Pvt., Co. K, 13 Reg't U. S. Col'd H. Art'y.

Age ..... years.

Appears on

Company Muster Roll*

for June 30, 1865.

Joined for duty and enrolled:

When May 26, 1865.

Where Maysville Ky.

Period 3 years

Mustered in: FROM SECOND AUDITOR'S ROLL.

NEXT ROLL ON FILE MUSTER OUT.

When June 10, 1865.

Where Greensburg Ky.

Present or absent Present

Stoppage, $ 100 for .....

Due Gov't, $ 100 for .....

Valuation of horse, $ 100

Valuation of horse equipments, $ 100

Remarks: Transferred from 121 U. S. C. I.

* First current roll. No muster-in roll of this company on file.

Book mark: .....

Gallagan

(3586)

Copyist.

V | **13** H. Art'y. | **U.S.C.T.**

Elijah Vanmeter

Pvt, Co. K, 13 Reg't U. S. Col'd H. Art'y.

Appears on **Co. Muster-out Roll,** dated Louisville Ky., Nov. 18, 1865.

Muster-out to date Nov. 18, 1865.

Last paid to June 30, 1865.

Clothing account:

Last settled ....., 186 ; drawn since $ 100

Due soldier $ ..... 100; due U. S. $ 35 64/100

Am't for cloth'g in kind or money adv'd $ 100

Due U. S. for arms, equipments, &c., $ 100

Bounty paid $ ..... 100; due $ 100

Remarks: .....

.....

.....

.....

.....

.....

Book mark: .....

Galligan

2134

Yanmeter Gillis

Co K, 13 U.S.Col'd H.Art'y.

Private	Private

CARD NUMBERS.

1 55182 15	26
2 55139 81	27
3 55249 09	28
4 55250 44	29
5 9129-377	30
6	31
7	32
8	33
9	34
10	35
11	36
12	37
13	38
14	39
15	40
16	41
17	42
18	43
19	44
20	45
21	46
22	47
23	48
24	49
25	50

Book Mark:

See also 121 m.o.c. Inf.

B | 13 H. Art'y. | U.S.C.T.

Willis Vannuiter

....., Co. K, 13 Reg't U. S. Col'd H. Art'y.

Appears on

Company Descriptive Book

of the organization named above.

DESCRIPTION.

Age 39 years; height 5 feet 6½ inches.

Complexion Yellow

Eyes Black; hair Black

Where born Clark Co Ky

Occupation Laborer

ENLISTMENT.

When May 26, 1865.

Where Nicholasville Ky

By whom Capt. Knapp; term 3 y'rs.

Remarks:

E. H. Reamer

(383*g*) **Copyist.**

V | 13 H. Art'y. | U.S.C.T.

Willis Vanmeter

Art., Co. K, 13 Reg't U. S. Col'd H. Art'y.

Appears on

M. and D. Roll of Men Transferred

to the organization named above,

from Co. G. 121

Roll dated Camp Nelson, Ky. June 23, 1865.

When enlisted May 26, 1865.

Period for which enlisted 3 years.

When mustered in June 10, 1865.

Present or absent Not stated

Company to which assigned

Remarks:

Book mark:

Rochester

(342) *Copyist.*

Y | 13 H. Art'y. | U.S.C.T.

Willis Gan Meter

Pvt., Co. ....., 13 Reg't U. S. Col'd H. Art'y.

Appears on

M. and D. Roll of Men Transferred

to the organization named above,

from Co....., 121 Reg't U. S. Colored Infantry.

Roll dated June 23, 1866.

When enlisted May 26, 1866.

Period for which enlisted 3 years.

When mustered in June 10, 1866

Present or absent Not stated.

Company to which assigned K.

Remarks: Credited to Clark

Co. 7 S. Ky.

Book mark :

C. Williams

Copyist.

V | 13 H. Art'y. | U.S.C.T.

Willis Vanmeter

Pvt, Co. K, 13 Reg't U. S. Col'd H. Art'y.

Age ..... years.

Appears on

Company Muster Roll*

for June 30, 186 5.

Joined for duty and enrolled:

When May 26, 186 5.

Where Maysville Ky.

Period 3 years

Mustered in: FROM SECOND AUDITOR'S ROLL.

NEXT ROLL ON FILE MUSTER OUT.

When June 10, 186 5.

Where Greensburg Ky.

Present or absent Present

Stoppage, $ 100 for .....

Due Gov't, $ 100 for .....

Valuation of horse, $ 100

Valuation of horse equipments, $ 100

Remarks: Transferred from 121 U. S. C. I.

* First current roll. No muster-in roll of this company on file.

Book mark: .....

Galligan

(3586) Copyist.

V | 13 H. Art'y. | U.S.C.T.

Willis Vannetter

Pvt., Co. K., 13 Reg't U. S. Col'd H. Art'y.

Appears on **Co. Muster-out Roll,** dated Louisville Ky., Nov. 15, 1865.

Muster-out to date Nov. 18, 1865.

Last paid to June 30, 1865.

Clothing account:

Last settled ....., 186 ; drawn since $ 100

Due soldier $ ..... 100; due U. S. $ 22 34/100

Am't for cloth'g in kind or money adv'd $ 100

Due U. S. for arms, equipments, &c., $ 100

Bounty paid $ ..... 100; due $ 100

Remarks: .....

.....

.....

.....

.....

.....

Book mark: .....

Galligan

(361) *Copyist.*

L 2755

Yount Peter

Co L, 13 U.S.Col'd H. Art'y.

Private	Private

CARD NUMBERS.

1	55519382	26	
2	5551g145	27	
3	55252222	28	
4	55253396	29	
5	55255517	30	
6	912953537	31	
7		32	
8		33	
9		34	
10		35	
11		36	
12		37	
13		38	
14		39	
15		40	
16		41	
17		42	
18		43	
19		44	
20		45	
21		46	
22		47	
23		48	
24		49	
25		50	

Book Mark:

See also 72 U.S.C. Inf

D. 2518150 Romm

D. Müller Ex.

V | **13** H. Art'y. | **U.S.C.T.**

Peter Grant

....., Co. L, 13 Reg't U. S. Col'd H. Art'y.

Appears on

Company Descriptive Book

of the organization named above.

DESCRIPTION.

Age 35 years; height 5 feet 10 inches.

Complexion Blk

Eyes Blk; hair Blk

Where born Green Co. Ky

Occupation Laborer

ENLISTMENT.

When Jan 2, 1865.

Where Lebanon Ky.

By whom Capt Fiddler; term 3 y'rs.

Remarks:

E. D. Greenfield

(383*g*) **Copyist.**

V | 13 H. Art'y. | U.S.C.T.

Peter Yant

Pvt., Co. L, 13 Reg't U. S. Col'd H. Art'y.

Age ..... years.

Appears on

Company Muster Roll*

for Jun 30, 1865.

Joined for duty and enrolled:

When Apr 2, 1865.

Where Lebanon Ky

Period 3 years

Mustered in:

When Jun 21, 1865.

Where Lebanon Ky

Present or absent Present

Stoppage, $ 100 for .....

Due Gov't, $ 100 for .....

Valuation of horse, $ 100

Valuation of horse equipments, $ 100

Remarks; Rec'd 65 cts Canteen Cost

* First current roll. No muster-in roll of this company on file.

Book mark: .....

Elger

(358b) Copyist.

V | 13 H. Art'y. | U.S.C.T.

Peter Vaunt

Pri, Co. L, 13 Reg't U. S. Col'd H. Art'y.

Appears on

M. and D. Roll of Men Transferred

to the organization named above,

from Co C 72 USC Inf

Roll dated Camp Nelson Ky July 3, 1865.

When enlisted Jan 2, 1865.

Period for which enlisted 3 years.

When mustered in Jan 2, 1865.

Present or absent Not stated

Company to which assigned

Remarks: 4 Dist Ky

Book mark:

S. Merchant

(342) *Copyist.*

V | 13 H. Art'y. | U.S.C.T.

Peter Vaunt

Pvt, Co....., 13 Reg't U. S. Col'd H. Art'y.

Appears on

M. and D. Roll of Men Transferred

to the organization named above,

from 72 U.S.C.T.

Roll dated July 3, 186 5.

When enlisted Jan 2, 186 5.

Period for which enlisted 3 years.

When mustered in Jan 2, 1865.

Present or absent not stated

Company to which assigned L

Remarks:

4 Dist- Ky

Book mark :

J Underwood

(342) *Copyist.*

V | 13 H. Art'y. | U.S.C.T.

Peter Vant

Pvt, Co. L, 13 Reg't U. S. Col'd H. Art'y.

Appears on

Company Muster Roll

for July & Aug, 1865.

Present or absent

Stoppage, $ 100 for

Due Gov't, $ 100 for

Valuation of horse, $ 100

Valuation of horse equipments, $ 100

Remarks: Died

NEXT ROLL ON FILE MUSTER OUT.

Book mark:

Loger

(358) *Copyist.*

1 | 13 H. Art'y. | U.S.C.T.

( )

Peter Vanant

Pvt., Co. ——, 13 Reg't U. S. Col'd H. Art'y.

Appears on **Co. Muster-out Roll,** dated

Louisville Ky, Aug, 1865.

Muster-out to date ——, 186 .

Last paid to Nov 64, 186 .

Clothing account:

Last settled ——, 186 ; drawn since $ ——100

Due soldier $ ——100; due U. S. $ ——100

Am't for cloth'g in kind or money adv'd $ ——100

Due U. S. for arms, equipments, &c., $ ——100

Bounty paid $ ——100; due $ ——100

Remarks: Died Aug 10/65 at Camp Nelson Ky of Debility.

Book mark: ——

---

(361) *Copyist.*

Vaunt, Peter

P, Co. L, 13 Reg't Vt. a-

3 **Enclosures.**

Bed Cards	Final Statements /
Burial Records /	Furloughs or L. of A.
Certs. of Dis. for Discharge	Med. Certificates
C. M. Charges	Med. Des. Lists
Descriptive Lists	Orders
Discharge Certificates	Pris. of War Record
Enlistment Papers	Resignations

Other papers relating to—

Admission to Hosp'l	Furlough or L. of A.
Casualty Sheet /	Med. Examination
Confinement	Misc. Information
Contracts	Pay or Clothing
Death or Effects	Personal Reports
Desertion	Rank
Discharge from Hosp'l	Transfer to Hosp'l
Discharge from Service	Transfer to V. R. C.
Duty	Transportation

CASUALTY SHEET

No.

Peter Vaist

Private of Company L

13th Regiment of U.S.C.H.A.

State Volunteers.

NATURE OF CASUALTY.

Died Augt. 10. 1865.

CASUALTY SHEET.

Name: Peter Vant

Rank: Private *Company:* L *Regiment:* 13"

Arm: Cav'd Hvy Artz. *State:* U.S.

Nature of Casualty: Sick.

CAUSE OF CASUALTY—(NAME OF DISEASE, &C.)

Debility

DEGREE OF DISABILITY.

BY WHOM CERTIFIED.

Col. J. T. Foster.
Comd'g Regt.

DATE OF DISCHARGE, DEATH, &C.

August 10" 1865.

PLACE OF DISCHARGE, DEATH, &C.

Camp Nelson Ky.

BY WHOM DISCHARGED.

FROM WHAT SOURCE THIS INFORMATION WAS OBTAINED.

Gen Returns dec'd Sept.
3rd Qr. 1865.

REMARKS.

A. J. Ball.
Clerk.

A.G.O.

Asst Sect Sent 2d Aud.

A.G.O.
Nov 21 1865
Invoice Ms Ct Mr rec'd
for effects. Value $ 11.90
Asst "B" Auditor

A.G.O. Jan 20 66
A.G. Mr. rec'd for Effects
Value $ 7.25 Asst "B"

ADJUTANT GENERAL'S OFFICE.
Aug 25 1866
Duplicate with Inventory sent 2d Auditor.

FINAL STATEMENT

OF

Peter Vaust

13 Reg't of Maryland Art

VOLUNTEERS.

Aug 16 1865

NOTE 1.—*Two* of these certificates (or duplicates) are to be given to each Volunteer Soldier or drafted man who may be discharged previously to the discharge of his company, that he may at once receive from the Paymaster the pay, &c., due him, and the captain or other COMMISSIONED officer commanding the company will certify to the act of the delivery of the duplicate certificates; on these certificates the Soldier is "entitled to" his *discharge*, and should also present his discharge to the Paymaster to have the payment endorsed on it. The discharge is to be given back to the Soldier by the Paymaster; the latter only retaining as his voucher the duplicate certificates.

NOTE 2.—If the Soldier is entitled to pay for the use of his horse, the Company Commander will certify to that fact on the back of both these final statements, and also to the time he has pay due for having been so mounted on his own horse.

NOTE 3.—When a Soldier is furnished with final statements, his descriptive list, if he has one, should be taken up by the officer who gives the Soldier these statements, and endorsed with a statement to this effect by the officer. This endorsement should exhibit a ful lstatement of the time for which the Soldier was allowed pay on his final statements, the clothing account, and all other charges against him or in his favor, so as to comprise a complete exhibit of his account. It will then be transmitted to the company commander of the Soldier, who will enter all the data necessary to a full understanding of the Soldier's account on the muster roll upon which the Soldier's discharge is reported. The descriptive list will then be destroyed. The object of this is, that the remaining portion of the Soldier's account may be settled upon the receipt of these muster rolls, and the Soldier receive any pay or allowances that may be due him at the time of his discharge, and which may not appear on his final statements from the fact that his descriptive list is incomplete. These accounts for back pay, &c., are settled by the 2d Auditor of the Treasury Department.

NOTE 4.—Charges for loss or injury to ordnance, horse equipments, and other miscellaneous charges, should appear under the heading of "Other Stoppages."

NOTE 5.—Bounty paid by State authorities, and not by the United States, will not be entered on this statement.

NOTE 6.—Amounts due the Sutler and Laundress must be entered on the muster roll on which the discharge, death, desertion, &c., is reported, as well as on the final statement, otherwise the amount cannot be collected from the United States.

NOTE 7.—This blank will be used for deceased volunteers and drafted men, as well as for others.

NOTE 8.—Where a Soldier dies in Hospital or on detached service, his descriptive list, if he has one, should be sent with his final statements, in duplicate, to the Adjutant General, Washington, D. C.

RECEIVED

I certify, on honor, that Peter Vanart a Private of ~~Captain~~ 2nd Lieut Faulks Company (L) of the 13th Regiment of Ky Vol Heavy Art. VOLUNTEERS, of the State of ....., born in Gradey Co., State of Ky., aged 35 years; 5 feet 10 inches high; Dk complexion, blk eyes, blk hair, and by occupation a Laborer, having joined the company on its original organization at Lebanon Ky, and enrolled in it at the muster into the service of the United States at Lebanon Ky., on the 2nd day of January, 1865, (or was mustered in service as a recruit, by .....
....., at ....., on the ..... day of .....,
186 , or was drafted and mustered into the service of the United States from the .....
Enrollment District of the State of ....., at .....,
on the ..... day of ....., 186 ,) to serve in the Regiment, for
the term of three years: and having served HONESTLY and
FAITHFULLY with his Company in Ward, Ky, to the present date, is now
entitled to a DISCHARGE by reason of Death
.....

The said Peter Vanart ~~was last paid by Paymaster~~
..... Enrollment ~~to include the day of~~ , ~~186 , and~~ has
pay due him from ~~that time~~ to the present date; he is entitled to pay and subsistence for
TRAVELING to place of enrollment, and whatever other allowances are authorized to volunteer
soldiers, drafted men, or militia, so discharged. He has received from the United States CLOTHING
amounting to Enrolled 67 40/100 dollars, since the 2nd day of January,
1865, when ~~his clothing account was last settled~~. He has received from the United States
..... 100 dollars advanced BOUNTY.

There is to be stopped from him, on account of the State of ....., or other
authorities, for CLOTHING, &c., received on entering service, ... 100 dollars; and
for other stoppages, viz: .....
.....
..... 100 dollars.

He has been furnished with TRANSPORTATION in kind from the place of his discharge to
.....; and he has been SUBSISTED for TRAVELING to his
place of enrollment, up to the ..... , 186 .

He is indebted to ....., SUTLER, ... 100 dollars.

He is indebted to ....., LAUNDRESS, ... 100 dollars.

Given in Duplicate, at Camp Nelson Ky., this 10th day
of August, 1865.

Judevine Lloyd
Surgeon U.S.V.
Commanding ~~Company~~.
Nelson Genl Hospital

[A. G. O. No. 95—First.

Head Quarters Camp of Distribution,

(Late Convalescent Camp.)

CAMP NELSON, KY., ... 1864

To the Commanding Officer of

Co .....

Sir:

.....

of your company has been paid in this Camp by Major .....

Paymaster, U. S. A., for the months of .....

and has obtained the following articles of clothing, all which you are required to charge on your company rolls:

Hats.	Caps.	Pants	Dress Coats.	Overcoats.	Jackets.	Blouses.	Shirts.	Drawers.	Boots. pr.	Shoes, pr	Socks,	Blankets	Ponchas.	Knapsacks	Haversacks	Canteens.		TOTAL VALUE, $	

Very Respectfully yours,

.....

Commandant of the Camp.

Steam Boat Clerk's Account.
Co. D 13th U.S.C.
August 10 to Nov 1st 1865.

Gen'l Hosp. Cabin
Camp Nelson, Ky.

RECORD OF DEATH AND INTERMENT

Name and number of person interred — Peter Hunt ~~Hunt~~

Number and locality of the grave — 1315

Hospital number of the deceased — 78 75

Regiment rank and company — Pr bo — "L" 3th U.S. Col Heavy Art

Residence before enlistment

Conjugal relation if married the residence of the widow

Cause of death — Debility

Age of the deceased

Nativity

References and remarks — T. S. Ed Dow. Jno D. Aug 11th 1865

Date of death and burial — August 10th 1865.

Memoranda

1 Cap
1 Dress coat
1 Overcoat
1 Pants
1 Shirt
2 Pr Drawers
1 Shoe
1 Blanket
1 Poncho
1 Knapsack
1 Canteen
1 Haversack

2136

Vaughn Cornelius C.

Co. A.; 13 U.S.Col'd H. Art'y.

Private	Sergeant.

CARD NUMBERS.

1 55517309	26
2 55516393	27
3 55523201	28
4 55520132	29
5 55520307	30
6 55520453	31
7 91280711	32
8	33
9	34
10	35
11	36
12	37
13	38
14	39
15	40
16	41
17	42
18	43
19	44
20	45
21	46
22	47
23	48
24	49
25	50

Book Mark:

See also

P O Munch 377778 - 3/19/19

D. J. Miller Ex.

2 | 13 H. Art'y. | U.S.C.T.

Jeremiah C Vaughn

Sergt, Co. C, 13 Reg't U. S. Col'd H. Art'y.

Appears on

Company Descriptive Book

of the organization named above.

DESCRIPTION.

Age 15 years; height 5 feet 11 inches.

Complexion Black

Eyes Blk; hair Blk

Where born Virginia

Occupation Farmer

ENLISTMENT.

When April 13, 1863.

Where Dayton O

By whom 3d Dist Ohio; term 1 y'rs.

Remarks: Transferred from Battery I May 31 1863 Sergt from May 8, 1863 Promoted 2d Lieut Sergt Oct 1st 1863 Per Special Order No 13 Dept Headqrs 10th Army Corps

Deadrick

(383*g*) Copyist.

V | 3 Drty | **U.S.C.T**

Cornelius O. Vaughn

Appears with rank of Asst on

Muster and Descriptive Roll of a Detachment of Drafted Men and Substitutes forwarded

for the 13 Reg't U. S. Col'd Drty Roll dated

Columbus O, Apr 25, 1865

Where born Virginia

Age 18 years; occupation Farmer

Drafted and mustered in:

When Apr. 13, 1865.

Where Dayton O.

Period 1 years.

Eyes Blk; hair Blk

Complexion Blk; height 5 ft. 11 in.

Paid bounty and advance pay, $ 100

Bounty due $ 100

Where credited

Company to which assigned

Remarks: Sub. for Charles Oaks drafted from 1 ward

Book mark:

H. S. Donaldson

(340) (Over)

Copyist.

JAN. 16 1897
517309
1897

Dayton, Montgomery
Co. 3 Dist. O.

V | **13 H. Art'y.** | **U.S.C.T.**

Cornelius O. Vaughn

Sergt., Co. A, 13 Reg't U. S. Col'd H. Art'y.

Appears on

Company Muster Roll

for May & June, 186 5.

Present or absent Present

Stoppage, $ 100 for

Due Gov't, $ 100 for

Valuation of horse, $ 100

Valuation of horse equipments, $ 100

Remarks:

Appointed Sergt May 8th 65
Transferred from Batty H
1st Regt Order No. 41
1st Installment Bounty
due

FROM SECOND AUDITOR'S ROLL.

Book mark:

W. G. Hughes

(358) Copyist.

V | **13** H. Art'y. | **U.S.C.T.**

Cornelius B. Vaughn

Appears with rank of Sgt. on

Muster and Descriptive Roll of a Detachment of U. S. Vols. forwarded Organized as

Leo. A.

for the 13 Reg't U. S. Col'd H. Art'y. Roll dated

Camp Nelson Ky June 23 1865.

Where born Va.

Age 18 y'rs; occupation Farmer

When enlisted Apl. 13 1865.

Where enlisted Dayton, Ohio.

For what period enlisted 1 years.

Eyes Bk; hair Bk

Complexion Bk.; height 5 ft. 11 in.

When mustered in Apl. 13, 1865.

Where mustered in Dayton, Ohio.

Bounty paid $ 100; due $ 100

Where credited 3d Dist. Ohio.

Company to which assigned A

Remarks:

Book mark:

(339) Copyist.

V | 13th Inf. | U.S.C.T.

Cornelius L. Vaughn

1st; Co. H, 13 Reg't U. S. Col'd Inf'y

Age ____ years.

Appears on

Company Muster Roll*

for June 30, 1865.

Joined for duty and enrolled:

When April 13, 1865.

Where Dalton

Period 3 years.

NEXT ROLL ON FILE MUSTER OUT.

Mustered in:

When April 13, 1865.

Where Unknown

Present or absent

Stoppage, $ 100 for

Due Gov't, $ 100 for

Valuation of horse, $ 100

Valuation of horse equipments, $ 100

Remarks: Transferred to Co. "A" 13th U.S.C.H.A. June 1st 65

*First current roll. No muster-in roll of this company on file.

Book mark:

(358*b*) Louden *Copyist.*

V | 13 H. Art'y. | U.S.C.T.

Cornelius C. Vaughn

Sergt, Co. A, 13 Reg't U. S. Col'd H. Art'y.

Appears on

Company Muster Roll

for July & Aug, 186 5.

Present or absent Present

Stoppage, $ 100 for

Due Gov't, $ 100 for

Valuation of horse, $ 100

Valuation of horse equipments, $ 100

Remarks:

Appointed Sergt May 8/65
Transferred from Co. F. 1st
Regt NC dated
May 31, 65.
Due 1st Installment Govt
Bounty $33⅓

NEXT ROLL ON FILE MUSTER OUT.

Book mark:

W. D. Hughes

(358) Copyist.

V | **13** H. Art'y. | **U.S.C.T.**

Cornelius C. Vaughn

1st Sergt, Co. A, 13 Reg't U. S. Col'd H. Art'y.

Appears on **Co. Muster-out Roll,** dated Louisville Ky, Jun 18, 186 5.

Muster-out to date Jun 18, 186 5.

Last paid to June 30, 186 5.

Clothing account:

Last settled ....., 186 ; drawn since $ 100

Due soldier $ 2 85/100; due U. S. $ 100

Am't for cloth'g in kind or money adv'd $ 100

Due U. S. for arms, equipments, &c., $ 100

Bounty paid $ 33 1/3 100; due $ 33 1/3 100

Remarks:

Appointed Sgt May 8/65. promoted 1st Sgt Oct 1. 65. Due from U.S. Paymaster per Check book $340.

Book mark: 448. 476

W. G. Hughes

(361) *Copyist.*

2137

Venable Archie

Co), 13 U.S.Col'd H. Art'y.

Private | Private

CARD NUMBERS.

1 5516139	26
2	27
3	28
4	29
5	30
6	31
7	32
8	33
9	34
10	35
11	36
12	37
13	38
14	39
15	40
16	41
17	42
18	43
19	44
20	45
21	46
22	47
23	48
24	49
25	50

Book Mark:

See also

V | **13** H. Art'y. | **U.S.C.T.**

Archie Venable

Appears with rank of Pvt on

Muster and Descriptive Roll of a Detachment of U. S. Vols. forwarded

for the 13 Reg't U. S. Col'd H. Art'y. Roll dated

Louisville Ky, Apl 6, 1865.

Where born Shelby Co Ky

Age 44 y'rs; occupation Farmer

When enlisted Apl 6, 1865.

Where enlisted Louisville Ky

For what period enlisted 3 years.

Eyes blk; hair blk

Complexion blk; height 5 ft. 4½ in.

When mustered in Apl 6, 1865.

Where mustered in Louisville Ky

Bounty paid $ 100; due $ 100

Where credited Shelby Co Ky

Company to which assigned

Remarks: Enlisted by order Sec War under Gen Thomas Order No 20 Not taken upon roll of Regt.)

Book mark:

Rose

(339) *Copyist.*

2138

Vessey George

Co F, 13 U.S.Col'd H. Art'y.

Corporal	Corporal

CARD NUMBERS.

1 55516961	26
2 55173128	27
3 55230556	28
4 55232213	29
5 91288810	30
6	31
7	32
8	33
9	34
10	35
11	36
12	37
13	38
14	39
15	40
16	41
17	42
18	43
19	44
20	45
21	46
22	47
23	48
24	49
25	50

Book Mark:

See also

H | 13 H. Art'y. | U.S.C.T.

George Nefsey

....., Co. I, 13 Reg't U. S. Col'd H. Art'y.

Appears on

Company Descriptive Book

of the organization named above.

DESCRIPTION.

Age 42 years; height 5 feet 5½ inches.

Complexion Blk

Eyes Blk; hair Blk

Where born Pennsylvania

Occupation Barber

ENLISTMENT.

When Apr 5, 1865.

Where Flint Mich.

By whom Capt Stuckland; term 1 y'rs.

Remarks:

Beck

(383*g*) *Copyist.*

V | 13 Arty | U.S.C.T

George Vesey

Appears with rank of ..... on

Muster and Descriptive Roll of a Detachment of Drafted Men and Substitutes forwarded

for the 13 Reg't U. S. Col'd Arty Roll dated

(Jackson Mich, April 6, 1865

Where born Pa.

Age 21/2 years; occupation Barber

~~Drafted~~ Enlisted and mustered in:

When Apr 5, 1865.

Where Detroit

Period 1 years.

Eyes Blk; hair Blk

Complexion Blk; height 5 ft. 5½ in.

Paid bounty and advance pay, $ 100

Bounty due $ 100

Where credited Bangor 6 Corp Dist

Company to which assigned .....

Remarks: Sub for Aaron Bill

.....

Book mark: .....

W. S. Thompson

(340) Copyist.

V | 13 H. Arty | U.S.C.T.

George Vezey

Appears with rank of Corp on

Muster and Descriptive Roll of a Detachment of U. S. Vols. ~~forwarded~~ Mustered

for the 13 Reg't U. S. Col'd ~~Infantry.~~ Harty Roll dated

Camp Nelson Ky June 23 1865.

Where born Pennsylvania

Age 42 y'rs; occupation Barber

When enlisted Apl. 5, 1865.

Where enlisted Flint Mich.

For what period enlisted 1 years.

Eyes Blk; hair Blk

Complexion Blk; height 5 ft. 5½ in.

When mustered in Apr. 5, 1865.

Where mustered in Flint

Bounty paid $~~100~~; due $~~100~~

Where credited 6 Mich. Ky

Company to which assigned H

Remarks:

x as shown on Roll

Book mark:

E. B. Taylor

(340) Copyist.

V | 13 H. Art'y. | U.S.C.T.

George Vesey

6pl., Co. D, 13 Reg't U. S. Col'd H. Art'y.

Age ..... years.

Appears on

Company Muster Roll*

for June 30, 1865.

Joined for duty and enrolled:

When Apl 5, 1865.

Where Flint Mich.

Period 1 years

NEXT ROLL ON FILE MUSTER OUT.

Mustered in:

When Apl 5, 1865.

Where Flint Mich.

Present or absent Present

Stoppage, $.....100 for .....

Due Gov't, $.....100 for .....

Valuation of horse, $.....100

Valuation of horse equipments, $.....100

Remarks: Promoted to 6pl

June 10" 1865.

* First current roll. No muster-in roll of this company on file.

Book mark: .....

Louden

(3586) Copyist.

V | 13 H. Art'y. | U.S.C.T.

George Veesey

Cpl, Co. D, 13 Reg't U. S. Col'd H. Art'y.

Appears on **Co. Muster-out Roll,** dated Louisville Ky, Nov 1, 1865.

Muster-out to date Nov 1, 1865.

Last paid to June 30, 1865.

Clothing account:

Last settled ....., 186 ; drawn since $ 100

Due soldier $ 2 09/100; due U. S. $ 100

Am't for cloth'g in kind or money adv'd $ 100

Due U. S. for arms, equipments, &c., $ 100

Bounty paid $ ..... 100; due $ 100

Remarks: Due from the U.S. $154.45 as per check book

Book mark: .....

Louden

(361) *Copyist.*

Vesey, George,

13
~~102~~, Co. ....., Reg't U. S. C. Inf H.A.

1 Enclosures.

Bed Cards	Final Statements
Burial Records	Furloughs or L. of A
Certs. of Dis. for Discharge	Med. Certificates
C. M. Charges	Med. Des. Lists
Descriptive Lists	Orders
Discharge Certificates	Pris. of War Record
Enlistment Papers 1	Resignations

Pub.

Other papers relating to—

Admission to Hosp'l	Furlough or L. of A
Casualty Sheet	Med. Examination
Confinement	Misc. Information
Contracts	Pay or Clothing
Death or Effects	Personal Reports
Desertion	Rank
Discharge from Hosp'l	Transfer to Hosp'l
Discharge from Service	Transfer to V. R. C.
Duty	Transportation

DECLARATION OF SUBSTITUTE.

I, George Besey, desiring to ENLIST in the **Army of the United States,** for One year; ***Do declare,*** That I am 42 years and ~~months~~ of age; that I have never been discharged from the United States service on account of disability or by sentence of a court martial; and I know of no impediment to my serving honestly and faithfully as a soldier for One year.

GIVEN at: Point Union

the 14th day of April 1865

WITNESS:

L. H. Wheelock

CREDITED.

Congressional District, 6th

Township or ~~Ward,~~ Bangor

County, Pocahontas

The within named man is an Able Bodied Laborer

Substitute, and is not *entitled to bounty.*

Preston

Assistant Adjt. General

SUBSTITUTE

VOLUNTEER ENLISTMENT.

STATE OF Michigan TOWN OF Bangor

I, George Besey born in the State of Pennsylvania, aged 42 years, and by occupation a Barber Do HEREBY ACKNOWLEDGE to have agreed with John Zill, Esq., of Bangor, Bay County, Michigan to become his **SUBSTITUTE** in the Military Service, for a sufficient consideration paid and delivered to me, on the 4th day of April, 1865; and having thus agreed with said John Zill, I DO HEREBY ACKNOWLEDGE to have enlisted this 4th day of April 1865, to serve as a ***Soldier*** in the **Army of the United States of America,** for the period of One year, unless sooner discharged by proper authority: I do also agree to accept such bounty, pay, rations, and clothing, as are, or may be, established by law for soldiers. And I do solemnly swear that I will bear true and faithful allegiance to the ***United States of America;*** that I will serve them honestly and faithfully against all their enemies or opposers whomsoever; and that I will observe and obey the orders of the President of the United States, and the orders of the Officers appointed over me, according to the Rules and Articles of War.

Sworn and subscribed to at Flint Mich this 4th day of April 1865. Before L. F. Wheelock Notary Public for Shiawassee Co. Mich

George Besey

We certify, on honor, That we have carefully examined the above-named Volunteer Substitute agreeably to the Regulations, and that, in our opinion, he is free from all bodily defects and mental infirmity which would in any way disqualify him from performing the duties of a soldier; that he was entirely sober when enlisted; that he is of lawful age, (not under 18 years;) and that, in accepting him as duly qualified to perform the duties of an able-bodied soldier, and as a Substitute in lieu of John Zill who was, drafted in Bangor, Bay County Mich, March 21st, 1865, we have strictly observed the Regulations which govern in such cases. This soldier has Black eyes, Black hair, Black complexion; is 5 feet 5 1/2 inches high.

R Strickland
Capt. and *Provost Marshal.*

Henry Stagnell
Commissioner of Board.

E G Gale
Surgeon of Board.

Board of Enrollment of 6th *Dist. of* Michigan

2139

Vice Burk

Co G, 13 U.S.Col'd H. Art'y.

Sergeant	Sergeant

CARD NUMBERS.

1 15518243	26
2 15517979	27
3 15523381	28
4 15523532	29
5 15523683	30
6 9129090	31
7	32
8	33
9	34
10	35
11	36
12	37
13	38
14	39
15	40
16	41
17	42
18	43
19	44
20	45
21	46
22	47
23	48
24	49
25	50

Book Mark:

See also 12 U.S.C. Inf.

S-T03075 P.O. Off.

D. O. Fuller & Co.

2 | 13 H. Art'y. | U.S.C.T.

Brock Price

....., Co. F, 13 Reg't U. S. Col'd H. Art'y.

Appears on

Company Descriptive Book

of the organization named above.

DESCRIPTION.

Age 33 years; height 6 feet 1 inches.

Complexion Blk

Eyes Blk; hair Blk

Where born Bath Co. Ky.

Occupation Laborer

ENLISTMENT.

When Dec 13, 1864.

Where Mustered Dec 19'64 Greenupsb'g Ky

By whom Capt W C Gier; term 3 y'rs.

Remarks: appointed Sergt

to date from Jan 2d 65

Beck

(383*g*) **Copyist.**

V | 13 H. Art'y. | U.S.C.T.

Burk Eice

Sergt., Co. G, 13 Reg't U. S. Col'd H. Art'y.

Appears on

M. and D. Roll of Men Transferred

to the organization named above,

from Co. C, 121 U.S. Col'd Inf'y.

Roll dated Camp Nelson, Ky. June 23, 1865.

When enlisted Dec 13, 1864.

Period for which enlisted 3 years.

When mustered in Dec 19, 1864.

Present or absent Not stated

Company to which assigned

Remarks: Appointed Sergt.

Jan. 20. 1865

Book mark :

Broaster

(342) *Copyist.*

V | 13 H. Art'y. | U.S.C.T.

Burk View

Sgt., Co. ....., 13 Reg't U. S. Col'd H. Art'y.

Appears on

M. and D. Roll of Men Transferred

to the organization named above,

from Co....., 121 Reg't U. S. Colored Infantry.

Roll dated June 23, 1865

When enlisted Dec. 13, 1864

Period for which enlisted 3 years.

When mustered in Dec. 19, 1864

Present or absent Not stated

Company to which assigned G.

Remarks: Credited to Bath

Co. 9 D. Ky.

Book mark :

C Williams,

(342) *Copyist.*

2~ | **13 H. Art'y.** | **U.S.C.T.**

Burke Vice

Sergt., Co. G, 13 Reg't U. S. Col'd H. Art'y.

Age ..... years.

Appears on

Company Muster Roll*

for from June 23 to 30, 1865.

Joined for duty and enrolled:

When Dec. 13, 1864

Where Greensburg, Ky.

Period 3 years

Mustered in:

When Dec. 19, 1864.

Where Greensburg, Ky.

Present or absent Present

Stoppage, $ 1 65/100 for C. V. G. E.

Due Gov't, $ 00/100 for

Valuation of horse, $ 00/100

Valuation of horse equipments, $ 00/100

Remarks:

* First current roll. No muster-in roll of this company on file.

Book mark:

W. Anderson
Copyist.

(3586)

2 | 13 H. Art'y. | U.S.C.T.

Burke Vica

Sergt, Co. G, 13 Reg't U. S. Col'd H. Art'y.

Appears on

Company Muster Roll

for July & Aug, 1865.

Present or absent Present

Stoppage, $1 95/100 for C. & G. C.

Due Gov't, $100 for

Valuation of horse, $100

Valuation of horse equipments, $100

Remarks:

NEXT ROLL ON FILE MUSTER OUT.

Book mark:

Yi Anderson

(358) *Copyist.*

V | 13 H. Art'y. | U.S.C.T.

Burk Vice

Sergt, Co. G, 13 Reg't U. S. Col'd H. Art'y.

Appears on **Co. Muster-out Roll,** dated Louisville, Ky, Nov 18, 1865.

Muster-out to date Nov 18, 1865.

Last paid to June 30, 1865.

Clothing account:

Last settled ....., 186 ; drawn since $ 100

Due soldier $ 1 25 100; due U. S. $ 100

Am't for cloth'g in kind or money adv'd $ 100

Due U. S. for arms, equipments, &c., $ 100

Bounty paid $ 100 00 100; due $ 100

Remarks: Appt Sergt Jan 20, 1865.
Due US for ord lost Dom prior 65.
He has the difference of a private's pay
and noncommissioned officer's due him
from the 28 of Feb 1865 (date when
last paid as the 121 U S C I)
Lovell

~~Book mark~~:

---

a W allen

(361) *Copyist.*

JAN. 16 1891
5523683

to the 23 of June 1865
(date of organization of the
13 (W & H A.)

Book mark: V 239. P 222, 77.

2140

Vice James

Co L, 13 U.S.Col'd H. Art'y.

Private | Private

CARD NUMBERS.

1 55194478	26
2	27
3	28
4	29
5	30
6	31
7	32
8	33
9	34
10	35
11	36
12	37
13	38
14	39
15	40
16	41
17	42
18	43
19	44
20	45
21	46
22	47
23	48
24	49
25	50

Book Mark:

See also

V 1316 Ary **U.S.C.T.**

James Vice

Pvt., Co. L, 13 Reg't U. S. Col'd H Arty

Appears on a

Detachment Muster-out Roll

of the organization named above. Roll dated

Lexington Ky, Oct 16, 1865.

Muster-out to date Oct 16, 1865.

Last paid to June 30, 1865

Clothing account:

Last settled ....., 186 ; drawn since $.....100

Due soldier $.....100; due U. S. $.....100

Am't for cloth'g in kind or money adv'd $26 55/100

Due U. S. for arms, equipments, &c., $.....100

Bounty paid $.....100 due $.....100

Remarks: Mustered out by reason of expiration of Term of Service. Stoppage for C & G E .00 — (Aged 39.) Enrolled & Mustered Oct. 7/64 Dayton Ohio 1 yr. / Not stated on roll of Regt.

Book mark:.....

Collings

(349) *Copyist.*

2141

Vick James

Co A, 13 U.S.Col'd H. Art'y.

Corporal	Corporal

CARD NUMBERS.

1	55164 06	26	
2	55198 42	27	
3	55199 74	28	
4	55201 08	29	
5	55201 45	30	
6	55203 20	31	
7	55204 67	32	
8	9128 060	33	
9	431360 05	34	
10		35	
11		36	
12		37	
13		38	
14		39	
15		40	
16		41	
17		42	
18		43	
19		44	
20		45	
21		46	
22		47	
23		48	
24		49	
25		50	

Book Mark:

See also

D. 1966602 4.2.0.

D. D. Miller. Ex.

V | 13 H. Art'y. | U.S.C.T.

James Vick

....., Co. ....., 13 Reg't U.S. Col'd H. Art'y.

Appears on

Company Descriptive Book

of the organization named above.

DESCRIPTION.

Age 22 years; height 5 feet 7½ inches.

Complexion Dark

Eyes Blk ; hair Blk

Where born Logan Co Kentucky

Occupation Farmer

ENLISTMENT.

When Oct 1st, 1864.

Where Sterling Ill

By whom Capt Hobson ; term 3 y'rs.

Remarks:

Deserted

(383*v*) *Copyist.*

7 | 13 N a. | U.S.C.T.

James Vick

Appears with rank of Pvt on

Muster and Descriptive Roll

of a Detachment of U.S. colored recruits forwarded for 13 Regt U.S Colored Volly. Roll dated Bowling Green Ky, Oct 31, 1864.

Where born Logan Co Ky

Age 23 years; occupation Farmer

When enlisted Oct 17, 1864.

Where enlisted B. Green Ky

For what period enlisted 3 years.

Eyes blk; hair blk

Complexion D. brown; height 5 ft. 7 1/2 in.

When mustered in ____, 186 .

Where mustered in ____

Bounty paid $ ____ 100; due $ ____ 100

Clothing account:

Last settled ____, 186 ; drawn since $ 8 30/100

Date of first muster Oct 18, 1864.

Company to which assigned ____

Remarks: New recruit Logan Co. owed Service to Geo S Vick

Book mark : ____

G. B. Nott

(356m) **Copyist.**

13 H. Art'y. | **U.S.C.T.**

James Vick

Pvt., Co. A, 13 Reg't U. S. Col'd H. Art'y.

Age ..... years.

Appears on

Company Muster Roll*

for 6 Dec 64, 186 4.

Joined for duty and enrolled:

When Oct. 18, 186 4.

Where Bowling Green, Ky

Period 3 years

Mustered in:

When Oct. 18, 186 4.

Where Bowling Green Ky

Present or absent Present

Stoppage, $ 100 for .....

Due Gov't, $ 100 for .....

Valuation of horse, $ 100

Valuation of horse equipments, $ 100

Remarks: .....

* First current roll. No muster-in roll of this company on file.

Book mark: .....

W. O. Hughes

Copyist.

(3586)

V | **13 H. Art'y.** | **U.S.C.T.**

James Dick

Sprd, Co. A, 13 Reg't U. S. Col'd H. Art'y.

Appears on

Company Muster Roll

for Jan & Feb, 186 5.

Present or absent Present

Stoppage, $ 100 for

Due Gov't, $ 100 for

Valuation of horse, $ 100

Valuation of horse equipments, $ 100

Remarks:

Due $10 first installment of Gov Bounty.

Book mark:

W. A. Hughes

Copyist.

(358)

V | 13 H. Art'y. | U.S.C.T.

James Vick

Ind, Co. A, 13 Reg't U. S. Col'd H. Art'y.

Appears on

Company Muster Roll

for Mch & Apr, 186 5.

Present or absent Present

Stoppage, $ 100 for

Due Gov't, $ 100 for

Valuation of horse, $ 100

Valuation of horse equipments, $ 100

Remarks:

Book mark:

W. G. Hughes

(358) Copyist.

U | 13 H. Art'y. | U.S.C.T.

James Dick

Corp'l, Co. A, 13 Reg't U. S. Col'd H. Art'y.

Appears on

Company Muster Roll

for May & June, 186 5.

Present or absent Present

Stoppage, $ 1 95/100 for Cr of C

Due Gov't, $ 00/100 for

Valuation of horse, $ 00/100

Valuation of horse equipments, $ 00/100

Remarks: Appointed Corpl June 2 1865
1st Installment Bounty due

FROM SECOND AUDITOR'S ROLL.

Book mark:

H. H. Hughes

(358) Copyist.

V | 13 H. Art'y. | U.S.C.T.

James Clark

Appears with rank of Corpl. on

Muster and Descriptive Roll of a Detachment of U. S. Vols. forwarded

for the 13 Reg't U. S. Col'd H. Art'y. Roll dated

Camp Nelson, Ky. June 23, 1865.

Where born Logan, Ky.

Age 23 y'rs; occupation Farmer

When enlisted Oct. 18, 1864.

Where enlisted B. Green, Ky.

For what period enlisted 3 years.

Eyes Black; hair Black

Complexion Black; height 5 ft. 7½ in.

When mustered in Oct. 18, 1864.

Where mustered in B. Green, Ky.

Bounty paid $ 100; due $ 100

Where credited

Company to which assigned C.

Remarks: Appointed June 23/63 ✓

Book mark:

Maynard

(339) Copyist.

2 | 13 H. Art'y. | U.S.C.T.

James Vick

Corpl, Co. A, 13 Reg't U. S. Col'd H. Art'y.

Appears on

Company Muster Roll

for July & Aug, 186 5.

Present or absent Present

Stoppage, $ 100 for

Due Gov't, $ 100 for

Valuation of horse, $ 100

Valuation of horse equipments, $ 100

Remarks: Appointed Corpl June 23/65
Due 1st Installment Got
Bounty $100.

NEXT ROLL ON FILE MUSTER OUT.

Book mark:

W. J. Hughes

(358) Copyist.

13 H. Art'y. | U.S.C.T.

James Vick

Corpl, Co. A, 13 Reg't U. S. Col'd H. Art'y.

Appears on **Co. Muster-out Roll,** dated Louisville Ky, Nov. 18, 186 5.

Muster-out to date Nov 18, 186 5.

Last paid to June 30, 186 5.

Clothing account:

Last settled ....., 186 ; drawn since $ 100

Due soldier $ ..... 100; due U. S. $ 20 83/100

Am't for cloth'g in kind or money adv'd $ 100

Due U. S. for arms, equipments, &c., $ 100

Bounty paid $ 100 00/100; due $ 100

Remarks: Apptd a Corpl June 23/65

Book mark :

N. G. Hughes

(361) *Copyist.*

2142

Vincent Joshua

Co L, 13 U.S.Col'd H.Art'y.

Private	Private

CARD NUMBERS.

1 5519384	26
2 5519147	27
3 5525224	28
4 5525371	29
5 5525495	30
6 912953 9	31
7	32
8	33
9	34
10	35
11	36
12	37
13	38
14	39
15	40
16	41
17	42
18	43
19	44
20	45
21	46
22	47
23	48
24	49
25	50

Book Mark:

See also 12 usc. Inf.

D. C. Miller & Co.

8.63197 E.O.E.

V | 13 H. Art'y. | U.S.C.T.

Joseph Spicer of

....., Co. L, 13 Reg't U. S. Col'd H. Art'y.

Appears on

Company Descriptive Book

of the organization named above.

DESCRIPTION.

Age 21 years; height 5 feet 5 inches.

Complexion Dark

Eyes Dark; hair Dark

Where born Kentucky

Occupation Laborer

ENLISTMENT.

When Dec 21, 1864.

Where Louisville Ky

By whom Capt Moore; term 3 y'rs.

Remarks: Substitute

E. H. Hopewell

(383*g*) *Copyist.*

V | 13 H. Art'y. | U.S.C.T.

Joshua Vincent

Pvt, Co. L, 13 Reg't U. S. Col'd H. Art'y.

Age ..... years.

Appears on

Company Muster Roll*

for To June 30, 186 4.

Joined for duty and enrolled:

When ....., 186 .

Where .....

Period 3 years

Mustered in:

When Dec. 21, 186 4.

Where Lexington Ky

Present or absent Present

Stoppage, $ 100 for .....

Due Gov't, $ 100 for .....

Valuation of horse, $ 100

Valuation of horse equipments, $ 100

Remarks: Substitute

* First current roll. No muster-in roll of this company on file.

Book mark: .....

(358b) Copyist.

V | 13 H. Art'y. | U.S.C.T.

Joshua Vincent

Pvt, Co. L, 13 Reg't U. S. Col'd H. Art'y.

Appears on

M. and D. Roll of Men Transferred

to the organization named above,

from Co C 72 U S C Inf

Roll dated Camp Nelson Ky July 2 186 5.

When enlisted ....., 186 .

Period for which enlisted 3 years.

When mustered in Dec. 27, 186 4.

Present or absent not stated

Company to which assigned

Remarks: Sub for Mr B. Caswell

7 Dist Ky

Book mark :

J Merchant

(342) *Copyist.*

2 | 13 H. Art'y. | U.S.C.T.

Joshua Vincent

Pvt., Co....., 13 Reg't U. S. Col'd H. Art'y.

Appears on

M. and D. Roll of Men Transferred

to the organization named above,

from 72 Mass I

Roll dated July 3, 186 5.

When enlisted ....., 186 .

Period for which enlisted ..... 3 years.

When mustered in Dec 21, 186 4.

Present or absent Not stated

Company to which assigned L

Remarks:

7 Dist. Ky

Sub. for Wm B. Caswell

Book mark :

(342) J Hammond *Copyist.*

13 H. Art'y. | U.S.C.T.

Joshua Vincent

Pvt., Co. L, 13 Reg't U. S. Col'd H. Art'y.

Appears on

Company Muster Roll

for July & Aug, 1865.

Present or absent Present

Stoppage, $ 100 for

Due Gov't, $ 100 for

Valuation of horse, $ 100

Valuation of horse equipments, $ 100

Remarks:

NEXT ROLL ON FILE MUSTER OUT.

Book mark:

Leger

(358) Copyist.

V | 13 H. Art'y. | U.S.C.T.

Corporal Vincent

C, Co. L, 13 Reg't U. S. Col'd H. Art'y.

Appears on **Co. Muster-out Roll,** dated Louisville Ky, June 14, 1865.

Muster-out to date June 14, 1865.

Last paid to June 30, 1865.

Clothing account:

Last settled ....., 186 ; drawn since $ 100

Due soldier $ ..... 100 ; due U. S. $ 100

Am't for cloth'g in kind or money adv'd $ 20 54/100

Due U. S. for arms, equipments, &c., $ 100

Bounty paid $ ..... 100 ; due $ 100

Remarks: .....

Book mark: .....

(361) *Copyist.*

2143

Vinson Louis

Co F, 13 U.S.Col'd H. Art'y.

Private	Private

CARD NUMBERS.

1 55517066	26
2 55517463	27
3 55517350	28
4 55523157	29
5 55523314	30
6 9128914	31
7	32
8	33
9	34
10	35
11	36
12	37
13	38
14	39
15	40
16	41
17	42
18	43
19	44
20	45
21	46
22	47
23	48
24	49
25	50

Book Mark:

See also

Q | **13 H. Art'y.** | **U.S.C.T.**

Lewis Quinzon

....., Co. F, 13 Reg't U. S. Col'd H. Art'y.

Appears on

Company Descriptive Book

of the organization named above.

DESCRIPTION.

Age 36 years; height 5 feet 2½ inches.

Complexion Blk

Eyes Blk; hair Blk

Where born Miss

Occupation Laborer

ENLISTMENT.

When Sept 10, 1863.

Where St Louis Mo

By whom Lt Bates; term 3 y'rs.

Remarks:

O Beck

(383*g*) **Copyist.**

V | 13th a | U.S.C.T.

Louis Vinson

Appears with rank of ..... on

Muster and Descriptive Roll of a Detachment of Substitutes forwarded

for the 13 Reg't U. S. Col'd 4th a. Roll dated

St Louis Mo, Apr 10, 1865.

Where born Mississippi

Age 26 y'rs; occupation Laborer

When enlisted April 10, 1865.

Where enlisted St Louis Mo

For what period enlisted 1 years.

Eyes Blk; hair Blk

Complexion Blk; height 5 ft. 2½ in.

When mustered in April 10, 1865.

Where mustered in St Louis Mo

Bounty paid $ 100; due $ 100

Where credited .....

Company to which assigned .....

Remarks: Substitute for Valley Norm. Enrolled and drafted in 6th Ward 1st Dist. St Louis Dist Mo. Not entitled to bounty

Book mark: .....

F. E. Fuller

(339c) *Copyist.*

U | 13 Inf'y | **U.S.C.T**

Xavier Lincoln

Appears with rank of Private on

Muster and Descriptive Roll of a Detachment of Drafted Men and Substitutes forwarded

for the 13 Reg't U. S. Col'd Inf'y Roll dated

Gen'l Rendezvous for Mo, Apr 24, 1865

Where born Illinois.

Age 34 years; occupation Laborer

Enlisted

~~Drafted~~ and mustered in:

When Apr 10, 1863.

Where St. Louis, Mo.

Period 1 years.

Eyes Blk; hair Blk

Complexion Blk; height 5 ft. 9 in.

Paid bounty and advance pay, $ 100

Bounty due $ 100

Where credited 4th Dist. St. Louis, 1 Cong. Dist. Mo.

Company to which assigned

Remarks: Sub for Valley Thurn

Book mark:

W. S. Thompson

(340) Copyist.

W 13 Hdqrtrs U.S.C.T.

Lewis Vinson

Appears with rank of Pvt. on

Muster and Descriptive Roll of a Detachment of U. S. Vols. ~~forwarded~~ organized

for the 13th Reg't U.S.C.T. Hdqrtrs Roll dated

Camp Nelson Ky June 23, 1865.

Where born Mississippi

Age 26 y'rs; occupation Laborer

When enlisted Apr. 10, 1865.

Where enlisted St. Louis, Mo.

For what period enlisted 3 years.

Eyes Brk.; hair Brk.

Complexion Brk.; height 5 ft 2½ in.

When mustered in Apr. 10, 1865.

Where mustered in St. Louis.

Bounty paid $ 100; due $ 100

Where credited West Pa.

Company to which assigned D

Remarks:

Book mark:

B Taylor

(339) Copyist.

V | **13 H. Art'y.** | **U.S.C.T.**

Lewis Vinson

Pvt., Co. D, 13 Reg't U. S. Col'd H. Art'y.

Age ..... years.

Appears on

Company Muster Roll*

for ..... June 3, 1865.

Joined for duty and enrolled:

When ..... Apl. 10, 1865.

Where ..... St. Louis Mo.

Period 3 years

Mustered in:

When ..... Apl. 10, 1865.

Where ..... St. Louis

Present or absent ..... Present

Stoppage, $ ..... 100 for .....

Due Gov't, $ ..... 100 for .....

Valuation of horse, $ 100

Valuation of horse equipments, $ 100

Remarks: .....

NEXT ROLL ON FILE MUSTER OUT.

* First current roll. No muster-in roll of this company on file.

Book mark: .....

(3586) Copyist.

V | 13 H. Art'y. | U.S.C.T.

Lewis Vinson

Pvt., Co. D, 13 Reg't U. S. Col'd H. Art'y.

Appears on **Co. Muster-out Roll,** dated Louisville Ky, Nov 1st 1865.

Muster-out to date Nov 1st 1865.

Last paid to June 30 1865.

Clothing account:

Last settled ....., 186 ; drawn since $ 100

Due soldier $ 4 33 100; due U. S. $ 100

Am't for cloth'g in kind or money adv'd $ 100

Due U. S. for arms, equipments, &c., $ 100

Bounty paid $ ..... 100; due $ 100

Remarks: Issued the U.S. for one Wiper & one Cone 14 cts

Book mark: .....

Snider

(361) *Copyist.*

2144

Vogt Frank

Co L, 13 U.S.Col'd H.Art'y.

Private	Private

CARD NUMBERS.

1 5519383	26
2 5516146	27
3 5525223	28
4 5525370	29
5 5519485	30
6 5525506	31
7 9129538	32
8	33
9	34
10	35
11	36
12	37
13	38
14	39
15	40
16	41
17	42
18	43
19	44
20	45
21	46
22	47
23	48
24	49
25	50

Book Mark:

See also 72 U.S.C.H.A.

S-169849. P.O. M.M.
S, 1830791 P.O. a/L
S 1835023 P.O. a/L

D.D. Miller Ex.

V | 13 H. Art'y. | U.S.C.T.

Frank Wright

....., Co. L, 13 Reg't U. S. Col'd H. Art'y.

Appears on

Company Descriptive Book

of the organization named above.

DESCRIPTION.

Age 22 years; height 5 feet 6 inches.

Complexion Blk

Eyes Blk; hair Blk

Where born Gallia Co. Ky

Occupation Laborer

ENLISTMENT.

When Oct 8, 1864.

Where Gallipolis, Ohio

By whom Capt Simon; term 1 y'rs.

Remarks: Substitute

E. Wilkerson

(383g) **Copyist.**

V | 13 H. Art'y. | U.S.C.T.

Pvt. Frank Voglet

Pvt., Co. L, 13 Reg't U. S. Col'd H. Art'y.

Age ..... years.

Appears on

Company Muster Roll*

for Jun 30, 186 5.

Joined for duty and enrolled:

When ....., 186 .

Where .....

Period 1 years

Mustered in:

When Oct 8, 1864.

Where Owensboro Ky

Present or absent Present

Stoppage, $ 100 for .....

Due Gov't, $ 100 for .....

Valuation of horse, $ 100

Valuation of horse equipments, $ 100

Remarks: Substitute

* First current roll. No muster-in roll of this company on file.

Book mark: .....

Leger

(3586) Copyist.

78 | 13 H. Art'y. | U.S.C.T.

Frank Voght

Pri., Co. L, 13 Reg't U. S. Col'd H. Art'y.

Appears on

M. and D. Roll of Men Transferred

to the organization named above,

from Co C 72 USC Inf

Roll dated Camp Nelson Ky July 3, 186 5

When enlisted ....., 186 .

Period for which enlisted ..... 1 ..... years.

When mustered in ..... Oct 8 ....., 186 4.

Present or absent ..... Not stated .....

Company to which assigned .....

Remarks: ..... 2 Dist Ky

Original does not show who he is sub from

Book mark : .....

A. Merchant

(342) *Copyist.*

9 | 13 H. Art'y. | U.S.C.T.

Frank Voght

Pvt., Co....., 13 Reg't U. S. Col'd H. Art'y.

Appears on

M. and D. Roll of Men Transferred

to the organization named above,

from 12 Wis. C. S.

Roll dated July 3, 1865.

When enlisted , 186 .

Period for which enlisted 1 years.

When mustered in Oct 8, 1863.

Present or absent Not stated

Company to which assigned L

Remarks:

2 Dist- Ky

Sub- 1

Book mark :

J Hammond

(342) *Copyist.*

V | 13 H. Art'y. | U.S.C.T.

Frank Voglut

Pvt., Co. L, 13 Reg't U. S. Col'd H. Art'y.

Appears on

Company Muster Roll

for July & Aug, 1865.

Present or absent Present

Stoppage, $ 100 for

Due Gov't, $ 100 for

Valuation of horse, $ 100

Valuation of horse equipments, $ 100

Remarks:

NEXT ROLL ON FILE MUSTER OUT.

Book mark:

Leger

(358) *Copyist.*

V | 13 Hy Arty | **U.S.C.T.**

Frank Voight

Pvt., Co. L, 13 Reg't U. S. Col'd Hy Arty

Appears on a

Detachment Muster-out Roll

of the organization named above. Roll dated Lexington Ky., Oct 16, 1865.

Muster-out to date Oct 16, 1865.

Last paid to June 30, 1865

Clothing account:

Last settled ....., 186 ; drawn since $ 100

Due soldier $ ....100; due U. S. $ 23 34/100

Am't for cloth'g in kind or money adv'd $ 100

Due U. S. for arms, equipments, &c., $ 100

Bounty paid $ ....100 due $ 100

Remarks: Mustered out by reason of expiration of Term of Service. Stoppage for H & G E. 95

Book mark 482359

Collings

(349) *Copyist.*

V | **13** H. Art'y. | **U.S.C.T.**

Frank Voght

Pvt., Co. L, 13 Reg't U. S. Col'd H. Art'y.

Appears on **Co. Muster-out Roll,** dated Louisville Ky, Nov 18, 186 5.

Muster-out to date ....., 186 .

Last paid to June 30, 186 5.

Clothing account:

Last settled....., 186 ; drawn since $.....100

Due soldier $.....100; due U. S. $.....100

Am't for cloth'g in kind or money adv'd $.....100

Due U. S. for arms, equipments, &c., $.....100

Bounty paid $.....100; due $.....100

Remarks: Discharged Oct 16/65 by Exp of term of service

Book mark: 482359.

Lyon

(361) *Copyist.*

Vond William 2145

Co F, 13 U.S.Col'd H. Art'y.

Private	Private

CARD NUMBERS.

1 5551706	26
2 5551432	27
3 5523158	28
4 5523315	29
5 912 8915	30
6	31
7	32
8	33
9	34
10	35
11	36
12	37
13	38
14	39
15	40
16	41
17	42
18	43
19	44
20	45
21	46
22	47
23	48
24	49
25	50

Book Mark:

See also

1

D. J. Miller, Ex.

A985206. Cont'd
Headstone Case 10/3/40 - tec
(Special Feature up)
Call for William C. Vond)

9 | 13 H. Art'y. | U.S.C.T.

Madison Vond

....., Co. F, 13 Reg't U.S. Col'd H. Art'y.

Appears on

Company Descriptive Book

of the organization named above.

DESCRIPTION.

Age 43 years; height 5 feet 9 inches.

Complexion Blk

Eyes Blk; hair Blk

Where born Vermont

Occupation Laborer

ENLISTMENT.

When Jan 1 3, 1864.

Where Gd Rapids, Mich

By whom Capt Bailey; term 1 y'rs.

Remarks:

Beck

(383g) *Copyist.*

N | 13 Mo. Arty | U.S.C.T.

(William Hand,)

Appears with rank of Pvt on

Muster and Descriptive Roll of a Detachment of U. S. Vols. ~~forwarded~~ Enlisted

for the 13 Reg't U.S.C.T. Heavy. Roll dated

Camp Nelson, Ky June 23, 1863.

Where born Vermont

Age 43 y'rs; occupation Laborer

When enlisted Mar 13, 1863.

Where enlisted Grd. Rapids, Mich.

For what period enlisted 1 years.

Eyes Blk; hair Black,

Complexion Blk; height 5 ft. 7 in.

When mustered in Mar 23, 1863.

Where mustered in Grd. Rapids.

Bounty paid $ 100; due $ 100

Where credited Detroit, Mich

Company to which assigned D.

Remarks:

Book mark:

D Hayles

(339) Copyist.

V | 13 Artg. | U.S.C.T

William Vood

Appears with rank of ..... on

Muster and Descriptive Roll of a Detachment of Drafted Men and Substitutes forwarded

for the 13 Reg't U.S. Col'd Artg Roll dated

Hackensack Mich, Apr 24, 1865

Where born Clermont

Age 43 years; occupation Farmer

Drafted and mustered in:

When March 15, 1865.

Where Grand Rapids

Period 1 years.

Eyes Blk; hair Blk

Complexion Colored; height 5 ft. 9 in.

Paid bounty and advance pay, $ 100

Bounty due $ 100

Where credited Sparta, 4 Congress

Company to which assigned .....

Remarks: Drafted man

.....

Book mark: .....

H. S. Thompson

(340) Copyist.

V | 13 H. Art'y. | U.S.C.T.

William Vand

Pvt., Co. A, 13 Reg't U. S. Col'd H. Art'y.

Age ..... years.

Appears on

Company Muster Roll*

for ..... to June 30, 1865.

Joined for duty and enrolled:

When ..... March 15, 1865.

Where ..... Gd Rapids Mich.

Period ..... 1 ..... years

Mustered in:

When ..... Mch 25, 1865.

Where ..... Grand Rapids

Present or absent ..... Present

Stoppage, $ ..... 100 for .....

Due Gov't, $ ..... 100 for .....

Valuation of horse, $ 100

Valuation of horse equipments, $ 100

Remarks: .....

NEXT ROLL ON FILE MUSTER OUT.

* First current roll. No muster-in roll of this company on file.

Book mark: .....

(3586) Linden Copyist.

V | **13 H. Art'y.** | **U.S.C.T.**

William Vond

Pvt., Co. D, 13 Reg't U. S. Col'd H. Art'y.

Appears on **Co. Muster-out Roll,** dated Louisville Ky, Nov 1st 1865.

Muster-out to date Nov 1st 1865.

Last paid to June 30 1865.

Clothing account:

Last settled ....., 186 ; drawn since $ 100

Due soldier $ 8 31/100; due U. S. $ 100

Am't for cloth'g in kind or money adv'd $ 100

Due U. S. for arms, equipments, &c., $ 100

Bounty paid $ ..... 100; due $ 100

Remarks: .....

.....

.....

.....

.....

.....

Book mark: .....

---

(361) Louiden

Copyist.

2146

Waddie, Harry

Co. -, 13 U.S. Col'd H. Art'y.

Private -

CARD NUMBERS.

1	5~5~/6/5~5~	26	
2		27	
3		28	
4		29	
5		30	
6		31	
7		32	
8		33	
9		34	
10		35	
11		36	
12		37	
13		38	
14		39	
15		40	
16		41	
17		42	
18		43	
19		44	
20		45	
21		46	
22		47	
23		48	
24		49	
25		50	

Book Mark:

See also

W | 13 H. Art'y. | U.S.C.T.

Harry Waddie

Appears with rank of Pvt on

Muster and Descriptive Roll of a Detachment of U. S. Vols. forwarded

for the 13 Reg't U. S. Col'd H. Art'y. Roll dated

Louisville Ky, Apl 6, 1865.

Where born Shelby Co Ky

Age 46 y'rs; occupation Farmer

When enlisted Apl 6, 1865.

Where enlisted Louisville Ky

For what period enlisted 3 years.

Eyes blk; hair blk

Complexion blk; height 5 ft. 9½ in.

When mustered in Apl 6, 1865.

Where mustered in Louisville Ky

Bounty paid $ 100; due $ 100

Where credited Shelby Co Ky

Company to which assigned

Remarks: Enlisted by order Sec War under Sen Thomas Order No 70 Name not taken up on rolls of Regt

Book mark:

Rose

(339) Copyist.

MICROCOPY

1818

ROLL

260

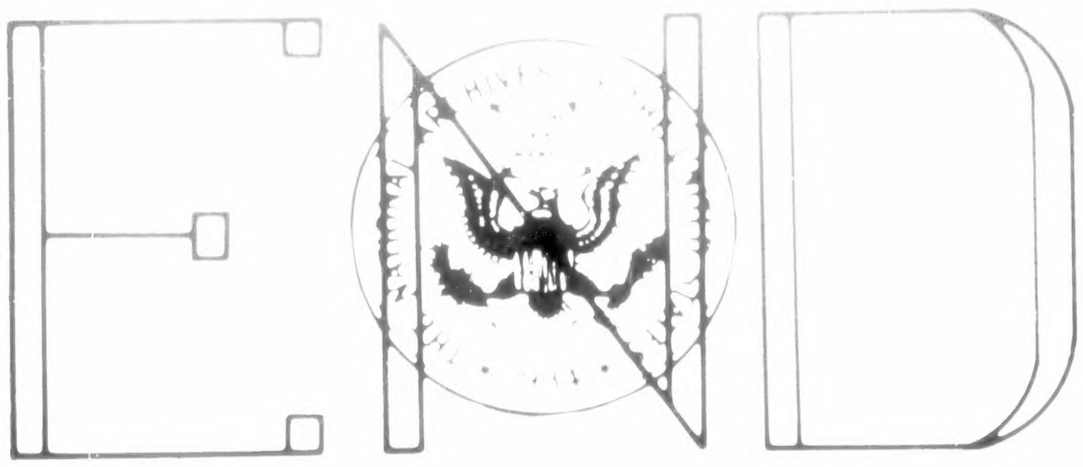

IMAGE EVALUATION
TEST TARGET (QA–3)

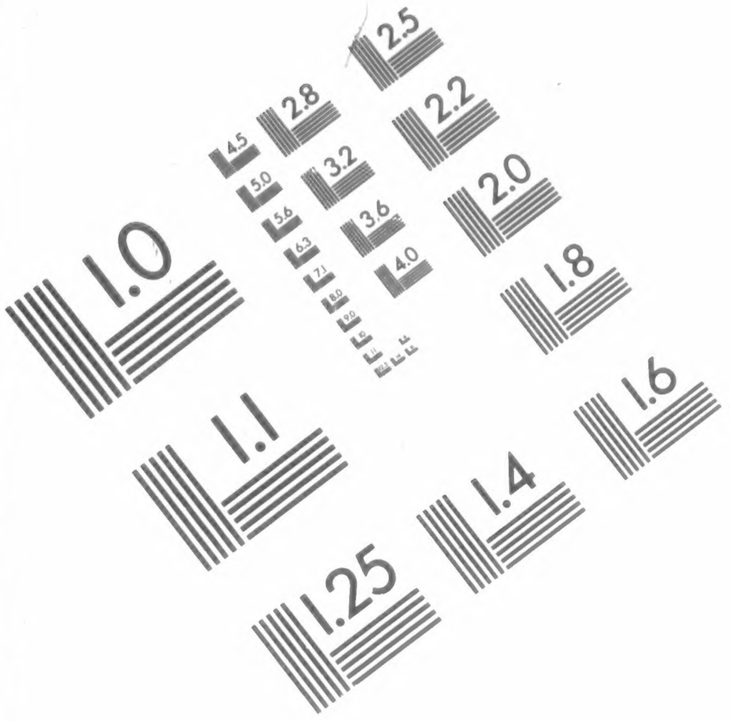

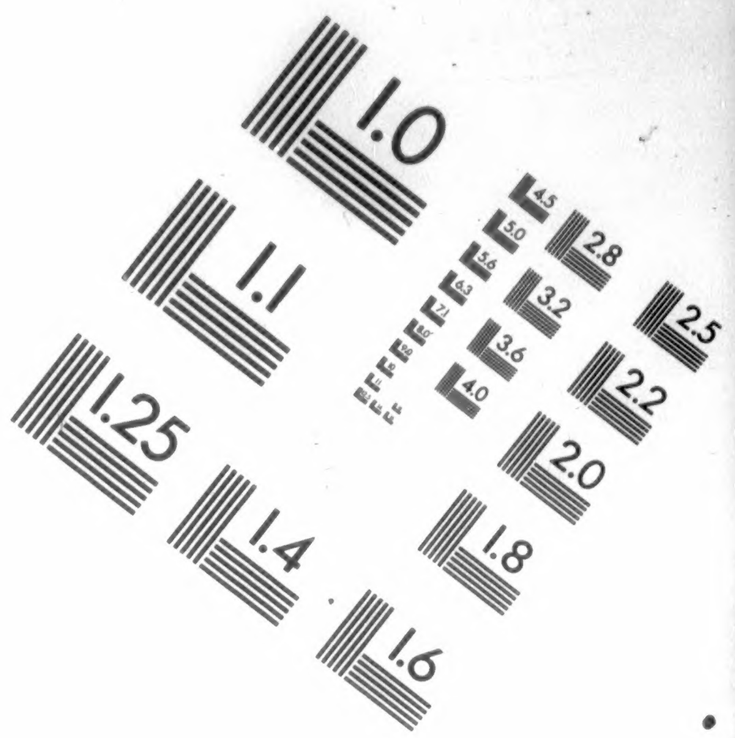

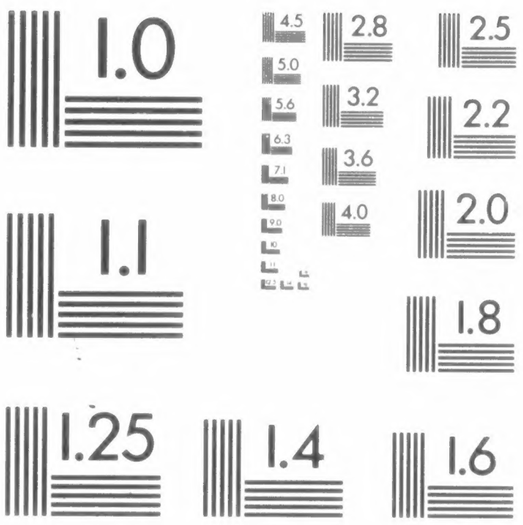

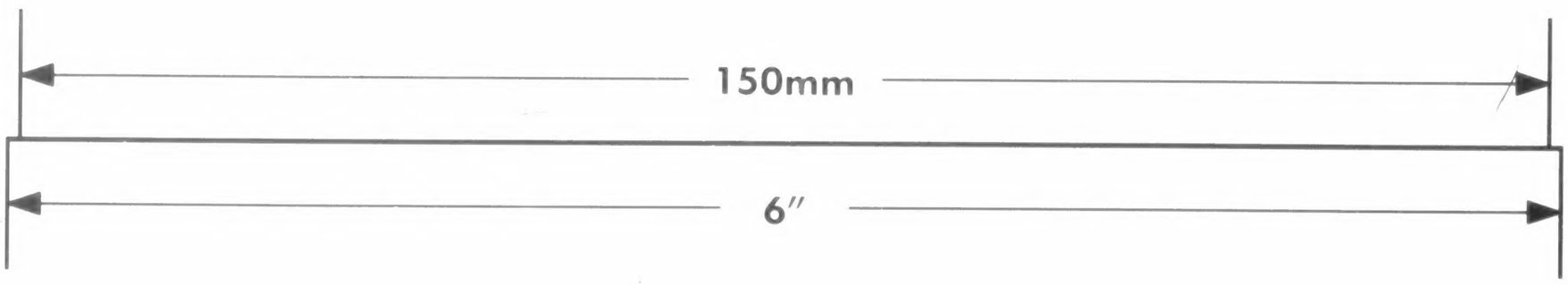

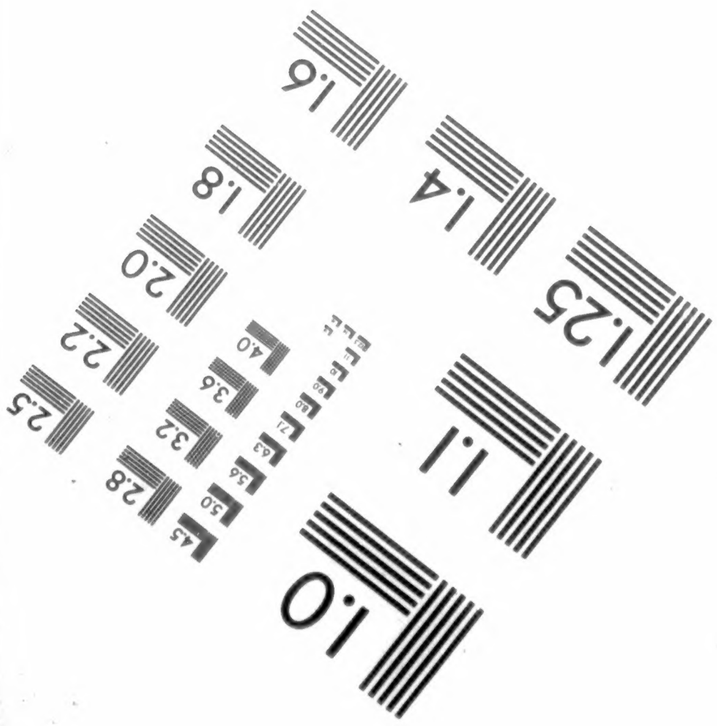

APPLIED IMAGE, Inc
1653 East Main Street
Rochester, NY 14609 USA
Phone: 716/482-0300
Fax: 716/288-5989

© 1993, Applied Image, Inc., All Rights Reserved

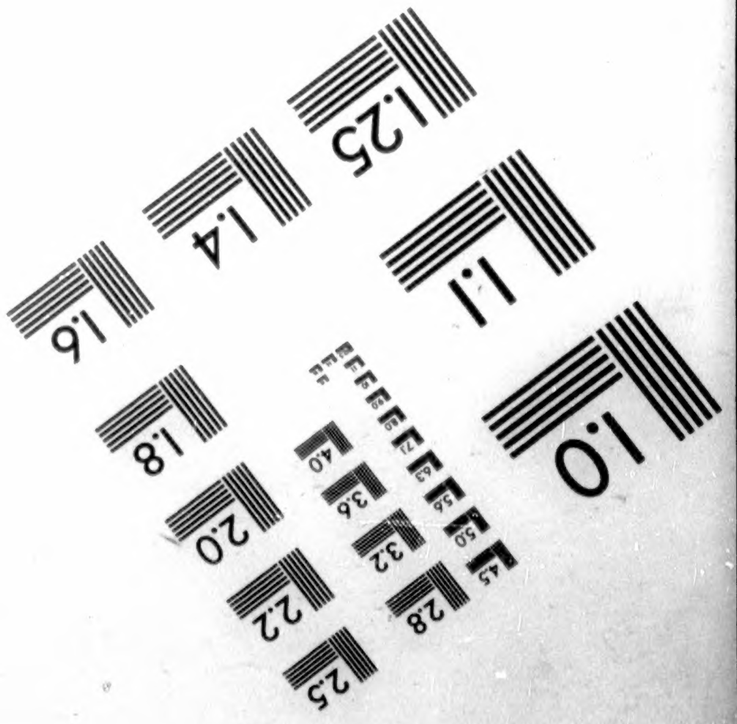

THE END

PLEASE

REWIND