EXPERIMENTAL ENGINEERING

— HOLMES

EXPERIMENTAL ENGINEERING

EXPERIMENTAL ENGINEERING

BY

U. T. HOLMES
Commander, U. S. Navy

ANNAPOLIS, MD.
THE UNITED STATES NAVAL INSTITUTE
1911

The Lord Baltimore Press
BALTIMORE, MD., U. S. A.

ERRATA SHEET.

"EXPERIMENTAL ENGINEERING." HOLMES.

p. 12, 11th line from foot of page, for "indeterminute" read "indeterminate."

p. 17, 9th line, for "*ob*" read "*ab*."

p. 22. Example in middle of page, first quantity in divisor under solution should read ".012."

p. 31, 3d line, under "Special Slide Rules," strike out second "for."

p. 34, 15th line, for "*P*" read "*F*."

p. 35, 5th line from bottom, for "grove" read "groove."

p. 57, Last line should read, "Suction in chamber *D* will be practically twice that in chamber *C*."

p. 58, 3d line, "the specific volume will be lower on passing through *B*."

p. 105, Equation 7 should read, $\phi_s = a \log_e \frac{T}{493} + \frac{L}{T}$.

p. 157, Last line, for "adopted" read "adapted."

p. 161, Fig. 91. Drop a perpendicular from the center of the shaft and indicate the horizontal distance between this perpendicular and one at *G* as *a*.

p. 171, 4th line, formula should read:

$$\phi = \frac{M \times L}{E \times I} \times \frac{2}{d} = \frac{\pi\theta}{180}.$$

10th line, for "moment of inertia" read "modulus."

5th line from bottom, for "evaluting" read "evaluating."

p. 262, 3d line from bottom, for "gage" read "gauze."

p. 263, 21st line, for "oil" read "water."

p. 269, 3d paragraph should read: The analysis of the coal, referred to *combustible, i. e.,* coal less ash and water, would be, in per cent: C, 89.6 (from 83.5 × 100 ÷ 93.2); H, 5.15; O, 3.43; N, 1.29; S, .536.

p. 270, line 9, should read: $19.1 \times .896 = 17.1$.

line 19, should read: $\frac{.015}{.835} = .018$.

For the sum of H_2O, " 56," read ".538."

lines 20 and 21, $19.1 + .54 = 19.64$.

line 21, $17.1 + .54 = 17.64$.

line 22, $17.64 \times .835 = 16.40$.

line 24, $17.64 - 1 = 16.64$.

p. 271, line 1, for " 17.41 " read " 17.64."

line 3, $17.64 \times .246 \times 515 = 2233.5$.

line 9, for ".56 " read ".538."

line 11, $.538 \times 965.8 = 519.5$.

5th line from foot, $\frac{.5 \times 10200}{12.7 + .5} \times \frac{89.6}{100} = 347.5$.

p. 272, line 7, for " 2206 " read " 2233.5."

line 9, for " 541 " read " 519.5."

line 10, for " 341 " read " 347.5."

line 12, for " 1349 " read " 1346.5."

p. 273, 5th line from bottom, insert words " Close *K* " before sentence beginning " Return leveling bottle," etc.

PREFACE

In attempting to revise the volume of Notes on Experimental Engineering compiled by the author in 1907, so much new matter was at hand and so many changes were found necessary that it was deemed advisable to rewrite the whole book. In doing this considerable matter belonging properly to the subject of experimental engineering has been brought in from other text-books.

The following authorities have been consulted: Carpenter's Experimental Engineering; Experimental Engineering, by Pullen and Popplewell; Physical Laboratory Notes, by Silas W. Holman; Barton's Internal Combustion Engines; Bieg's Text-Book on Naval Boilers; Departmental Notes; Smart's Laboratory Practice; Practical Cement Testing, by Taylor; Journal of the American Society of Mechanical Engineers; Journal of the American Society of Naval Engineers; Power and the Engineer; various manufacturers' pamphlets. The notes on the temperature-entropy diagram have, for the most part, been taken from the article on that subject by Lieutenant-Commander L. M. Nulton, U. S. N., published in the Journal American Society of Naval Engineers, Vol. VIII. The matter relating to time-firing devices has been supplied by Commander S. S. Robison, U. S. N., of the Bureau of Steam Engineering.

My thanks are due to Mr. F. H. Rittenour, draftsman in the Department of Marine Engineering and Naval Construction, for much valuable assistance in the preparation of the illustrations and to Mr. J. M. Armstrong for assistance in photographing apparatus. Also to the several manufacturers of engineering apparatus for their courtesy in supplying cuts of their laboratory appliances.

U. T. Holmes,
Commander, U. S. N.

Bureau of Steam Engineering, Navy Department, May, 1911.

CONTENTS

PAGE

CHAPTER I.

CHAPTER II.

CHAPTER III.

CHAPTER IV.

CHAPTER V.

CHAPTER VI.

CHAPTER VII.

CHAPTER VIII.

CHAPTER IX.

CHAPTER X.

CHAPTER XI.

EXPERIMENTAL ENGINEERING

CHAPTER I.

INTRODUCTION.

Experimental Engineering is that branch of the engineering profession which treats of the instruments and methods employed in the collection of engineering data and includes the testing of all materials and appliances employed in engineering work. Mechanisms are tested to determine the amount of work done on them, or by them, and their efficiency. Materials are tested for the determination of their strength, or suitability for the purpose required.

The study of experimental engineering gives the student familiarity with the various instruments employed in experimental work, together with the methods of calibrating and of using them.

Materials under test are seldom so homogeneous that samples, taken even from the same piece, show exactly the same strength. In efficiency tests the personal error of the observer is usually such as to cause slight variations in the results from different observations. The results obtained in such work can therefore have no fixed and certain values, following known laws, but will approximate more or less closely to the average value which it is desired to obtain. In order to approximate as closely as possible to the result, it is desirable, where possible, to obtain the mean result from a series of experiments. Where it is possible to secure only single observations, it is necessary to take more than ordinary precautions in eliminating all possible sources of error.

ENGINEERING CALCULATIONS.

Accuracy with some persons is instinctive—they practice it in every thought and action; with others it must be cultivated through severe mental discipline, and they must be continually on their guard against carelessness. No one will deny that accuracy is most desirable, yet there is always the chance of the exceedingly accurate person becoming absorbed in details without giving due attention to the main points. This is especially true with engineering calculations, where it is almost as bad to use unnecessary refinements as it is to carelessly use a number of crude approximations. From this it should not be inferred that precision may be neglected in purely mathematical operations. Forethought and discrimination are required in determining the necessary degree of accuracy. This involves an understanding of the relation which the calculation bears to the problem under consideration, in order that the desired result may be obtained without unnecessary labor.

Many problems involve assumptions or factors that cannot be accurately measured and it would be absurd to carry out the calculations to the third or fourth decimal place. For instance, in computing the load that a certain member would carry, the assumption is made that the point of rupture of that particular material is 50,000 pounds per square inch. Now, this material may fail at 45,000 pounds per square inch or it may withstand 55,000 pounds per square inch; hence, the futility of carrying the computations to a high degree of refinement.

Again, in calculating the indicated horse power of a steam engine from an indicator diagram, if a slide rule be used the result will be about as near the true horse power as would be the case if the problem were multiplied out in detail. The error in finding the area of the indicator diagram and the fact that the steam pressure in the indicator may not exactly represent that in the cylinder, make the result, at the best, only approximate.

On the other hand, there are many engineering calculations which require a high degree of accuracy. The detail parts of a complicated piece of mechanism, for example, must be worked out with great precision in order that the whole will assemble correctly when finished.

The advantage of being able to size up a problem at a glance with the exercise of proper judgment as to the degree of accuracy required, increases with experience. In the computing departments of large establishments great saving in time and labor may be effected by the intelligent use of approximations.

Measurements.—*Direct* measurements are those that can be read directly such as a measure of length, of time or of absolute quantity. *Indirect* measurements are those which must be calculated from data, the different parts of which may in turn be measured directly or indirectly. Thus the horse power of an engine is measured indirectly. The different factors entering into it are area of cylinder and length of stroke, measured directly, mean effective pressure, measured indirectly, and revolutions per minute which may be measured directly by counting or indirectly from a recording device, which gives the revolutions during an interval of time that must be read elsewhere.

Limits of Error in Observations.—The purpose for which a given quantity is measured must determine the degree of accuracy which we must endeavor to reach. This can usually be stated definitely as a numerical quantity, or limits can be assigned; first an upper limit below which the error must be kept and a second a lower limit below which the error will do no injury. The extreme care necessary to reduce the error below the lower limit will be useless and the labor necessary for great refinements of accuracy is usually out of proportion to the results obtained, so that the lower limit is often of much importance.

If the measurement is direct it becomes only necessary to select suitable apparatus and so operate it as to produce a result within the assigned limits of accuracy. If it is indirect, we should determine the degree of accuracy which is necessary in each of the various component measurements from which it is to be computed.

Deviations from the True Measurement.—Let $a_1, a_2, \ldots, a_n$ be the various single measurements of a quantity in a series, each being made with the same care and under the same conditions. These values will not usually be the same, but will differ according to the quality of the instrument used, the skill of the observer and the conditions under which he is operating. In the case of a series of rough measurements, say of a short distance to the nearest foot, the various measurements may be all alike, but even then they might differ by a foot if the correct measurement were approximately half a foot over or under. If the attempt be made to measure the distance to within, say one per cent, the separate results will diverge.

Suppose the different measurements to have been made with care, and that a_1, a_2, etc., show sensible divergence and R is the true value. Then $a_1-R=e_1$ is the first error, $a_2-R=e_2$ is the second, etc. But R is not known, else the measurements would not be required, hence the errors are also not known. It is therefore necessary to establish a rule for selecting a result that will best represent the correct measurement, and for a series such as that described, experience has demonstrated that the *arithmetical mean* best fulfills this requirement. The most probable value is therefore in such a case

$A=\frac{a_1+a_2+\ldots\ldots+a_n}{n}$, where n is the number of single observations.

If the single observations are not all equally reliable, so far as known, then before they are combined, some numerical measure of their relative reliability or weight must be taken. Let p_1, p_2, ... p_n be such numbers, then the most probable value will be the *weighted mean*

$$A=\frac{p_1a_1+p_2a_2+\ldots\ldots+p_na_n}{p_1+p_2+\ldots\ldots+p_n}.$$

The variation of the single observations will be shown by their deviation from the mean, viz.: $a_1-A=d_1$, $a_2-A=d_2$, ... $a_n-A=d_n$. A is, however, the mean, not the true result, hence these deviations d_1, etc., are not equal to e, etc. That is the deviations are not the errors and must not be confounded with them.

Sources of Error are of two classes, *determinate* and *indeterminute.* Determinate errors are those inherent in the apparatus, such as incorrect scales, etc., and can be corrected either absolutely or approximately. It is for the elimination of errors of this character that apparatus must be carefully calibrated. After all such corrections that are obtainable have been applied, there may still remain a small error in the apparatus. This is designated as the *residual error.*

In addition to the residual error there are many sources of error affecting all observations, which cannot be discovered and allowed for. These are all classed together as *indeterminate,* and are the cause of the deviation of the mean from the true result. In a large series of observations made under various conditions the effects of the indeterminate sources of error are likely to eliminate each other to a large extent since the errors of equal magnitude are about equally likely to be + or −. But in any series of observations by a single method there is a decided liability to the preponderance of certain indeterminate sources of error, leading to a mean result that may differ considerably from that obtained by a different method, while in either series the single results may differ very slightly from each other. There is thus, in any series of observations, a liability to a *constant error.* This can only be eliminated by having the observations made by as many different methods, instruments and observers as is possible and average the different results, giving each its proper weight as nearly as can be determined.

Mistakes. Rejection of Observations.

Mistakes must not be classed with errors of observation. They arise from mental confusion which leads to setting down a wrong number, reading a scale division incorrectly, selecting a wrong reference line, etc. Where one observation in a series differs widely from the others it should be checked over very carefully to eliminate mistakes. Great care and judgment must be exercised, after eliminating all mistakes, in scrutinizing such observations, in order to determine whether they should be used with the others or discarded. Some authors offer mathematical rules for guidance in such cases, but the best guide is the application of scrupulously honest unbiassed judgment, in other words, common sense. Where possible this should be given by some competent person other than the observer.

Significant Figures.—The term *significant figures,* in any expression, refers to the number of digits represented between and including the first and the last, without reference to the position of the decimal point. Thus the numbers 1234000., 12.34, 0.0001234, 5067, 5706, etc., each have four places of significant figures. In computations involving the use of observed data it is important to follow the rules for the retention or rejection of places of significant figures, in order, on the one hand, to give the result all the accuracy to which it is entitled from the data, and on the other hand to avoid encumbering the work with a useless mass of figures.

Let M be an original observed quantity and δ its average deviation. Let that place in M which corresponds to the second place of significant figures in δ be called the r^{th} place. M is uncertain by an amount δ. Suppose $\delta = 0.034$, then M is uncertain by 34 units in the r^{th} place, by 3 units in the $(r-1)$ place and is correct in the $(r-2)$ place. In general the first significant figure in the δ may be anything from 1 to 9; hence M is uncertain by 1 to 9 units in the $(r-1)$ place and by 10 to 99 units in the r place. The digit in the $(r-1)$ place in M is always uncertain and that in the r place is so very uncertain as to make its retention useless. Two places of significant figures in the δ are all that are of service since its only use is as an indication of the correctness of M. These considerations govern the retention of significant places in the data. Places may be rejected in the result whose value depends on the doubtful places in the data.

Rules for Significant Figures.

(1) In averaging a series of observations, results should be carried to two places only beyond the point where they become doubtful. Where the digit in the first place is large the second digit is of little or no value.

(2) In a single observation, the last place retained should be the second beyond which the reading can be made positively, or if the digit in the first place is large the second is unnecessary.

(3) In addition or subtraction, carry the sum or difference only to the second significant figure of the least precise quantity in the data.

(4) In multiplication or division, carry out the product or quotient at any stage of the work; only to the number of places corresponding to those retained in the least precise factor.

(5) In the use of logarithms, the mantissae should be retained to as many places as there should be significant figures retained according to rule 4. The characteristic is not to be considered as it merely serves to locate the decimal point.

Take for example the formula for horse power in a simple engine, viz.:

I. H. P. = const. × mean effective pressure × revs. per minute.

The mean effective pressure will usually be measured by an averaging instrument, giving the mean height of card correct to 1/10 inch, with a fairly close approximation to the hundredths place. Multiplying by the scale of the spring, the mean effective pressure is obtained in which the first place is correct, the second is probably correct, the third is doubtful and the fourth a very doubtful approximation. The revolutions per minute is obtained by counting while observing the revolution of the second hand of a clock or watch. This gives two places accurate after which they become doubtful.

Following rules 1 and 2, we use three or four places only in expressing the number of revolutions and the pressure. The constant factor need only be carried out to the fourth place corresponding with the other factors. From rule 4 it will be seen that it is useless to carry out the I. H. P. further than to four places.

Another example is that of a ship making standardization trials over the measured mile. Several observers agree on the nearest second, but differ on the tenths. Averaging the observations the rule provides for carrying out the average to the hundredths place. The number of revolutions on the mile is given by several counters to the nearest whole number. The mean, applying the rule, is carried to tenths. From these data the speed per hour and the corresponding revolutions per minute while on the mile are calculated, the speed going to hundredth knots and the revolutions per minute to tenths. Having thus determined the number of revolutions per minute for different speeds, we may construct a curve which will give us the relation between revolutions per minute and speeds per hour at all practicable speeds. To obtain the mean speed during any particular interval of time, it then becomes only necessary to observe the total number of revolutions, deduce the revolutions per minute and apply to the curve.

It is obvious that to obtain the revolutions per minute with a greater degree of accuracy than that obtained on the measured mile will be an unnecessary refinement, and will entail useless pains on the part of the observers.

Computations.—The labor involved in working out the results is often greater than that of taking the observations. In order to reduce this labor as much as possible the detail of the method of computation should be gone over and simplified as much as possible, rejecting useless places of figures and providing for frequent and systematic checking. In the actual work of computation the slide rule, as hereinafter described, will be found most useful for approximate results, while Fuller's and Thacher's instruments will be found accurate for computations involving four places of significant figures. The same degree of accuracy is obtained with four place logarithms and these will be found sufficiently accurate for most work. The usual five place tables may be used for practically any work.

It is essential that all instruments used in engineering observations should be carefully calibrated.

Reports.—In making reports on a test, the following should be included:

(1) A summary of the orders under which the experiments or test are made. The orders themselves or copies should be appended to the report.

(2) A description of the plant and apparatus.

(3) The methods employed in carrying on the test.

(4) The observed and calculated data, tabulated as far as possible. If blank forms are available these should be employed in making out data sheets.

(5) Conclusions and recommendations.

Any illustrations or drawings to accompany the report should be appended. Reports should be as concisely worded as possible, consistent with clearness.

CHAPTER II.

INSTRUMENTS FOR COMPUTING EXPERIMENTAL DATA.

The Logarithmic Scale.—Take the logarithms of numbers from 1 to 10 and consider them as representing dimensions on a linear scale as shown in Fig. 1. Let a and b be two pointers. Suppose a to be fixed in position and b capable of movement to the right or left. Suppose also the scale to be capable of movement along its length.

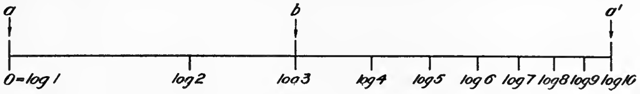

FIG. 1.

If we bring 0 on the scale opposite a, and place b opposite log 3, the distance ab will be equal to log 3. If then, without changing the position of b, we move the scale to the left the distance $0b$ will still be log 3. Suppose the scale to be moved so as to bring log 2 opposite a. Then $0b = 0a + ab = \log 2 + \log 3 = \log 6$. It is obvious that the mark log 6 must fall opposite b. If the scale be moved further to the left, bringing log 3 opposite a, $0b$ will equal $\log 3 + \log 3 = \log 9$. The mark log 9 will fall opposite b. If the scale be moved far enough to the left b will be off the scale. This is provided for by using a second fixed pointer a', at a distance from $a = aa' = \log 10$. Suppose log 5 placed opposite a, then log 10 is to the left of b. Shift the scale, bringing log 5 opposite a' (Fig. 2).

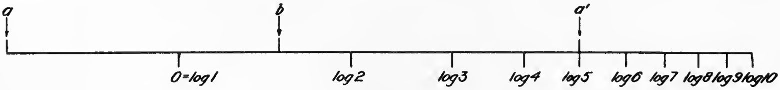

FIG. 2.

We have $aa' = \log 10$ and $ba' = \log 10 - \log 3$. But log 5 is opposite a' and $ba' = \log 5 - 0b$.

$$\therefore \log 10 - \log 3 = \log 5 - 0b \text{ and}$$

$$0b = \log 5 + \log 3 - \log 10 = \log 1.5.$$

From this it appears that for problems in simple multiplication, dropping the subscript *log*, if we set the scale to zero, *i. e.*, with a falling at 0, and a' at 10, bring the sliding pointer b opposite one of the factors, then set the scale to bring the second factor opposite either a or a', the result of multiplying together the two factors is read at b.

For division, suppose that the dividend be placed opposite a' and the sliding pointer moved opposite the divisor on the scale. Then $0a' = \log$ (dividend) and $0b = \log$ (divisor). $ba' = \log$ (dividend) $- \log$ (divisor) $= \log$ (quotient). Bringing 0 on scale, opposite b the quotient is read off opposite a.

From the foregoing it should be clear that a logarithmic scale is one on which the numbers set down are the linear measurements of the logarithms of the numbers so marked. It affords a means of mechanically adding or subtracting the logarithms of numbers and permits the number corresponding to the resulting logarithm to be read off directly.

By making the scale long enough and subdividing the divisions, it may be made to represent the logarithms of numbers from 0 to 1000, instead of 0 to 10.

Sexton's Omnimetre. Construction.—Inspection of the instrument shows that it contains a number of circles, each circle, or set of circles, containing a logarithmic scale of some function. The circles are named and differently colored so as to avoid danger of confusing them. With their several uses, they may be briefly described as follows:

Outer Circle. Logs.—This circle gives a direct reading of the logarithms of numbers shown on the A circle. For any number given on A, we read the decimal part of its logarithm opposite on *Logs*, as though read from a table of logarithms. With the instrument set to zero, *i. e.*, with $1B$ opposite $1A$, or with the A and B scales coincident, this circle also gives the logarithm of any function shown on the various other circles. By the term "opposite," as used herein, we mean *on the same radial line*, utilizing for accuracy the straight line, or edge of the runner, as a guide.

A Circle.—The subdivisions are to be read as though they were figures. We may call the starting point 1, 10, 100, 1000, etc.

The next subdivision to the right will be 1.005, 10.05, 100.5, 1005, etc.; and the second subdivision to the right, 1.010, 10.10 101.0, 1010, etc., respectively, the value of each subdivision varying by 5 until we come to 2 (or, 20, 200, etc.); then we begin to read by 1 in the third place for each subdivision, 2.01, 20.1, 201, etc., until later, when the value of the subdivision varies by 2 in the third place, so that the first subdivision to the left of the starting point is read as 9.98, 99.8, 998, etc.

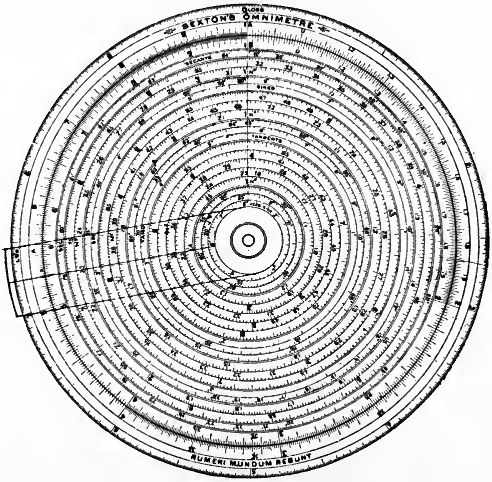

FIG. 3.—Sexton's Omnimetre.

B Circle.—The *A* and *B* circles are exactly alike in subdivisions and figures. With the instrument set to zero, remarks under *A* apply to *B*, as like numbers on the two circles coincide. We may regard scale *B* of the instrument as the single logarithmic scale described in the foregoing articles. The point 1*A*, or *zero* point, becomes both *a* and *a′* of the description, while the swinging transparent pointer with hair line becomes the movable pointer, *b*. Scales *A* and *B* constitute the *scale* and *slide* respectively of an ordinary double-scale slide rule, and may be used for ordinary calculations according to the explanation given on page 28. In the following detailed explanation of the method of using the omnimetre, in order to avoid confusing the student, all operations are made to begin and end with the instrument *set to zero.* All the work is done with the *B* scale only, the method of operation being that applicable to a single-scale slide rule. Short-cuts will after a time suggest themselves to the student, but these are not recommended until after complete familiarity with the instrument is established.

Squares or N^2.—The value of the square of any number found on *Squares* is opposite on *B*. If the number is on the inner *Squares* circle, its square has 1, 3, 5, etc., figures; if on the outer circle of *Squares,* 2, 4, 6, etc., figures. If the square root of any number is desired, first find the number on *B* then look opposite on *Squares* for the result, knowing from the foregoing which *Squares* circle will contain it, and the number of figures in the result.

Cubes or N^3.—The value of the cube of any number found on *Cubes* is opposite on *B*. If the number is on the inner *Cubes* circle, its cube has 1, 4, 7, etc., figures; if on the second *Cubes* circle, 2, 5, 8, etc., figures; and if on the third or outer *Cubes* circle, 3, 6, 9, etc., figures. If the cube root is desired, reverse the operation. Take the number from *B* and, having in mind the foregoing explanation, the proper *Cubes* circle in which to find the result and the number of figures it should contain, will be determined.

Fifth Powers or N^5.—The value of the fifth power of any number found on an N^5 circle is opposite on *B*. For numbers on the inner circle of N^5, the fifth power has 1, 6, 11, etc., figures; on the second circle, 2, 7, 12, etc., figures; on the third circle, 3, 8, 13, etc., figures; on the fourth circle, 4, 9, 14, etc., figures; and on the fifth or outer circle, 5, 10, 15, etc., figures. If the fifth root is desired, the reverse operation is followed as explained before.

Trigonometric Functions.—The numerical (natural) value of the secant, sine, tangent, or versed sine of any angle is found on *B* opposite the given angle on the circle of appropriate name. Setting the instrument to zero, the corresponding logarithmic function is read on the outer circle. The following explanation gives the method of finding the decimal point in various cases.

Secants.—There is no difficulty in locating the decimal point, as the secant of any angle is greater than unity, and within the limits of the instrument lies between 1 and 10.

Sines.—If the angle is between 0° 35′ and 5° 45′, use the inner

Sin. circle and read 0.01 to 0.10 on *B*. Between 5° 45′ and 86°, use the outer circle and read 0.10 to 1.00.

Tangents.—If the angle is between 0° 35′ and 5° 43′, use the inner *Tang.* circle and read 0.01 to 0.10 on *B*. If between 5° 43′ and 45°, use the middle circle and read 0.10 to 1.00 on *B*. If between 45° and 84° 15′, use the outer circle and read from 1.00 to 10.00 on *B*.

Versed Sines.—If the angle is between 2° 35′ and 8° 05′, use the inner circle and read 0.001 to 0.01 on *B*. If between 8° .05′ and 25° 50′, use the middle circle and read 0.01 to 0.1. If between 25° 50′ and 90°, use the outer circle and read 0.1 to 1.0.

Multiplication and Division.—In the use of the omnimetre as a calculating instrument for formulæ involving multiplication and division of any of the functions given on the various slide circles, a few experiments will emphasize the following useful points:

(a) The formula should always be expressed in the form of a fraction in which:

(b) $\dfrac{\text{No. of factors in numerator}}{\text{No. of factors in denominator}}$ should always be in the ratio of $\dfrac{x+1}{x}$.

Example 1: Required the value of $\dfrac{a\times b\times c}{d}$. This should be written $\dfrac{a\times b\times c}{d\times 1}$, unity being in all cases substituted for any of the missing factors.

Example 2: Required the value of $\dfrac{a}{b\times d\times c}$. The proper form of expression is $\dfrac{a\times 1\times 1\times 1}{b\times d\times c}$.

Example 3: Required the value of x from the equation:

$$x=\frac{a^3\times\sin b\times c\times d^3\times e}{\tan f\times g^2}.$$

Write the equation as $x=\dfrac{a^3\times\sin b\times c\times d^3\times e}{\tan f\times g^2\times 1\times 1}$.

a, b, c, etc., may, of course, be given any value that can be found on any circle of the slide.)

In problems involving the use of the cosine, cosecant, or cotangent, these functions should be written in the form:

$$\frac{1}{\text{secant}},\ \frac{1}{\text{sine}},\ \frac{1}{\text{tangent}},\ \text{respectively.}$$

(c) Having the problem expressed in proper form, as above, the first move is to set the instrument to zero, *i. e.,* 1*A* on 1*B,* so that like numbers on scale and slide coincide.

(d) For all factors in the numerator *move the runner over the slide, keeping the scale and slide stationary.*

(e) For all factors in the denominator *move the slide under the runner* until the required number on the slide comes under the radial line of the runner, *keeping the scale and runner stationary.*

(f) Alternate the movements of runner and slide.

(g) The last move is to set the slide to zero (1*A* on 1*B*), keeping runner and scale stationary, and along the runner in the proper circle will be found the required answer.

Example: Required the value of x from the equation:

$$x=\frac{0.296\times 73\times 0.00115\times 97.6\times 33.2}{.012\times 671.5}.$$

Solution:

(1) $x=\dfrac{0.296\times 73\times 0.00115\times 97.6\times 33.2}{0.12\times 671.5\times 1\times 1}.$

(2) Set the instrument to zero.

(3) Move runner to 296 on slide *B.*

(4) Bring 12 on slide under runner.

(5) Move runner to 73 on slide *B.*

(6) Bring 6715 on slide under runner.

(7) Move runner to 115 on slide *B.*

(8) Bring unity on slide under runner.

(9) Move runner to 976 on slide *B.*

(10) Bring unity on slide under runner.

(11) Move runner to 332 on slide *B.*

(12) Set the instrument to zero.

(13) Read numerical value of x on *B* (or *A*), as indicated by runner.

(14) Find position of decimal point by rough calculation.

Var. 1: If, instead of x, we have x^2, x^3, or x^5, then, after (12), read value of x from *Squares, Cubes* or N^5, as the case may be.

Var. 2: If, instead of x, we have $\sqrt{x}$, $\sqrt[3]{x}$, $\sqrt[5]{x}$, then, after (12), select from B the number indicated by the runner, and with this number enter *Squares, Cubes,* or N^5, and the value of x will be found opposite on B.

Var. 3: If, instead of x, we have $\sec\theta$, $\sin\theta$, $\tan\theta$, or vers $\sin\theta$, then, after (12), the value of θ as an angle is read from the circle *Sec., Sin., Tang.,* or *V. S.*, as the case may be.

As an example involving functions of the omnimetre, suppose we assume

$$x = \frac{\sin 14^\circ \times \tan 43^\circ \times \sec(39^\circ\ 20') \times \text{vers}\sin(27^\circ\ 45') \times (4.7)^3}{(36.75)^2 \times (1.965)^3},$$

$$(1)\ x = \frac{\sin 14^\circ \times \tan 43^\circ \times \sec(39^\circ\ 20') \times \text{vers}\sin(27^\circ\ 45') \times (4.7)^3}{(36.75)^2 \times (1.965)^3 \times 1 \times 1}.$$

(2) Set the instrument to zero.
(3) Move runner to 14° on slide *Sin.*
(4) Bring 3675 on slide N^2 to runner.
(5) Move runner to 43° on slide *Tang.*
(6) Bring 1965 on slide N^3 to runner.
(7) Move runner to 39° 20′ on slide *Sec.*
(8) Bring unity on slide B to runner.
(9) Move runner to 27° 45′ on slide *V. S.*
(10) Bring unity on slide B to runner.
(11) Move runner to 47 on slide N^3.
(12) Set instrument to zero.
(13) Read value of x on B as indicated by runner.
(14) Make rough calculation for decimal point.

Special Cases.—The method of using the instrument in the solution of a few well-known formulæ may be illustrated as follows:

Case 1: Should a formula contain a simple factor multiplied by a radical, it is much easier of solution to introduce the simple factor under the radical, and extract the root as a last operation.

Example: Find the diameter of a shaft to transmit 4850 I. H. P. at 165 revolutions.

The formula is:

$$d=K\sqrt[3]{\frac{\text{I. H. P.}}{\text{Revs.}}},$$

where $K=\text{constant}=4.3$.

Solution:

(1) $d=4.3\sqrt[3]{\frac{4850}{165}}=\sqrt[3]{\frac{(4.3)^3\times 4850}{165}}$,

(2) Set the instrument to zero.
(3) Move runner to 43 on slide N^3.
(4) Bring 165 on slide B to runner.
(5) Move runner to 485 on slide B.
(6) Set instrument to zero.
(7) Read value of d on N^3 as indicated by runner.
(8) Make rough calculation for decimal point.

Example 2: Find the thickness of a flat cylinder cover for a pressure of 165 pounds. Tensile strength allowed 10000. Diameter of cylinder 11.5 inches.

The formula is:

$$t=r\times\sqrt{\frac{2}{3}\times\frac{p}{f}}\quad\left(r=\frac{d}{2}\right).$$

Solution:

(1) $t=5.75\sqrt{\frac{2\times 165}{3\times 10000}}=\sqrt{\frac{(5.75)^2\times 2\times 165}{3\times 10000}}$.

(2) Set the instrument to zero.
(3) Move runner to 575 on slide N^2.
(4) Bring 3 on slide B to runner.
(5) Move runner to 2 on slide B.
(6) Bring 1 on slide B to runner.
(7) Move runner to 165 on slide B.
(8) Set instrument to zero.
(9) Read value of t from slide N^2.
(10) Make rough calculation for decimal point.

Case 2: To find the square root of the sum of two squares ($x=\sqrt{a^2+b^2}$).

Find the angle (θ) whose tangent is $\frac{a}{b}$ and divide a by the sine of this angle.

The reason for this may be seen by referring to Fig. 4, in which

$$\tan\theta = \frac{a}{b}$$

and

$$\sin\theta = \frac{a}{\sqrt{a^2+b^2}};$$

$$\therefore \sqrt{a^2+b^2} = \frac{a}{\sin\theta}.$$

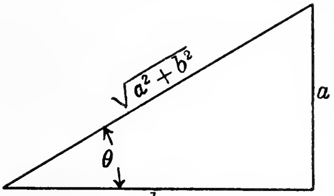

FIG. 4.

Example: Find the equivalent twisting moment of a solid shaft from the formula $T_e = M + \sqrt{M^2+T^2}$.

Solution:

(1) Consider the part under the radical and write

$$x = \sqrt{M^2+T^2} = \sqrt{a^2+b^2},\ \tan\theta = \frac{a}{b} = \frac{a\times 1}{b},$$

and

$$x = \frac{a}{\sin\theta} = \frac{a\times 1}{\sin\theta}.$$

(2) Set the instrument to zero.
(3) Move runner to a on slide B.
(4) Bring b on slide B to runner.
(5) Move runner to unity on slide B.
(6) Set instrument to zero.
(7) Note value of θ on slide *Tang.*
(8) Move runner to a on slide B.
(9) Bring θ on slide *Sin.* to runner.
(10) Move runner to unity on slide B.
(11) Set instrument to zero and read value of x on slide B, placing decimal point.
(12) The value of $T_e = x + M$.

Case 3: To find the square root of the difference of two squares ($x = \sqrt{a^2-b^2}$).

Find the angle (θ), whose sine is $\frac{b}{a}$, and divide a by the secant of this angle. The reason for this may be seen by referring to Fig. 5, in which

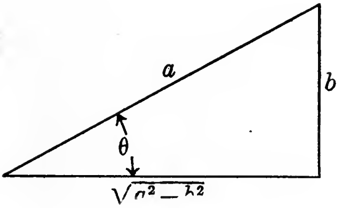

FIG. 5.

$$\sin\theta = \frac{b}{a}$$

and

$$\sec\theta = \frac{a}{\sqrt{a^2-b^2}};$$

$$\therefore \sqrt{a^2-b^2} = \frac{a}{\sec\theta}.$$

Example: Find the load that a screw thread will safely sustain, having given the formula:

$$W = K \times n \times \frac{\pi}{4} \times (d_1^2 - d_2^2).$$

Solution: (1) Consider the part in parenthesis and write

$$x^2 = (d_1^2 - d_2^2),\ x = \sqrt{d_1^2 - d_2^2} = \sqrt{a^2 - b^2},$$

$$\sin\theta = \frac{b}{a} = \frac{b \times 1}{a}, \text{ and } x = \frac{a}{\sec\theta} = \frac{a \times 1}{\sec\theta}.$$

(2) Set the instrument to zero.
(3) Move runner to b on slide B.
(4) Bring a on slide B to runner.
(5) Move runner to unity on slide B.
(6) Set instrument to zero.
(7) Note value of θ on slide *Sin.*
(8) Move runner to a on slide B.
(9) Bring θ on slide *Sec.* to runner.
(10) Move runner to unity on slide B.
(11) Set instrument to zero and read value of x^2 from N^2, placing decimal point.

(12) We now have $W = K \times n \times \frac{\pi}{4} \times x^2 = \frac{K \times n \times \pi \times x^2}{4 \times 1 \times 1}$, which is in proper form for solution in the usual manner.

Fuller's Calculating Instrument.—This instrument, shown in Fig. 6, is a single logarithmic scale about 83 feet in length, wound spirally on a cylinder *B*. This cylinder is capable of a movement of rotation, as well as a vertical movement on the cylinder *A*. The fixed pointers *a* and *a′* are carried on cylinder *A*, while the movable pointer *b* is attached to the handle *H* and is capable of a vertical, as well as a rotary movement. The instrument is thus seen to be the same in principle as that described above. The length of scale permits calculations corresponding in accuracy to those obtained with the use of four place logarithms.

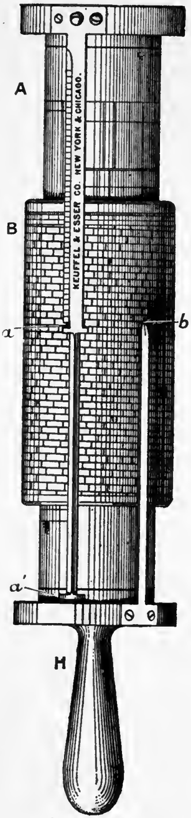

FIG. 6.

Sperry's Pocket Calculator.—This is another example of the single logarithmic scale and is made up in the form of a watch as shown in Fig. 7. There are two dials on the two opposite faces, as shown. The L dial contains a single logarithmic scale about 12½ inches long, arranged in three spirals, beginning and ending on the same radial line. A mark on the glass face constitutes the fixed pointer, which corresponds to both *a* and *a′* of page 17, since 0 and 10 are both found on the same radial line. The dial carrying the scale is movable, as well as a hand corresponding to the movable pointer *b*.

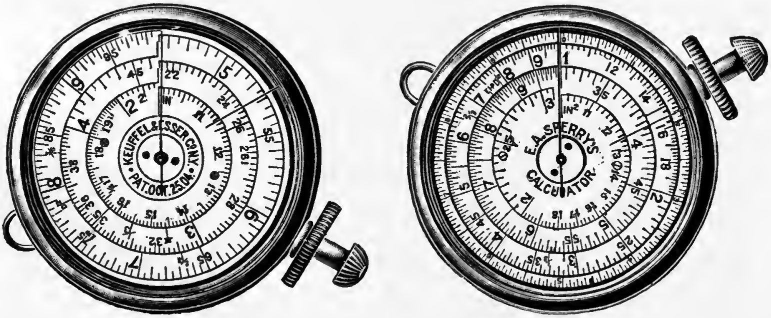

L DIAL. S DIAL.

FIG. 7.

The S dial bears a scale of equal parts, a circular logarithmic scale, and a scale of square roots.

This is a very convenient instrument for rough calculations, but the scale is not long enough for calculations requiring accuracy.

The Slide Rule.—This instrument, the most common adaptation of the logarithmic scale is illustrated in Fig. 8. There are two scales, similarly constructed, arranged to slide one on the other. There is also a sliding pointer, or "runner," used in reading off the results. For convenience in the following description the two scales will be designated as the "scale" and the "slide," respectively.

Operation.—For any position of the *slide* relative to the scale it is obvious that every number on the *slide* will bear the same ratio to the number opposite it on the *scale*. For example, bring 7 on the *slide* opposite 10 on the *scale*. The ratio $7 : 10 = 1 : \frac{10}{7}$, will be found along the whole length of the rule. The number on *scale* opposite any other number on *slide* will be the product of that number multiplied by 10, divided by 7. For example, opposite 2.1 on *slide* we read 3. We have then divided 10 by 7 and multiplied by 2.1. $\frac{10 \times 2.1}{7} = 3$. Obviously unity may be substituted for any one of these factors. Therefore to multiply any two numbers together, bring unity on *slide* opposite one of the numbers on *scale*, then opposite the other number on *slide* read the product on *scale*. In multiplying and dividing a number of factors, by using the *runner*, the necessity for reading the scale each time the slide is moved may be avoided. For example: Multiply $6 \times 7 \times 3$ and divide by 8×2.

$$\frac{6 \times 7 \times 3}{8 \times 2}$$

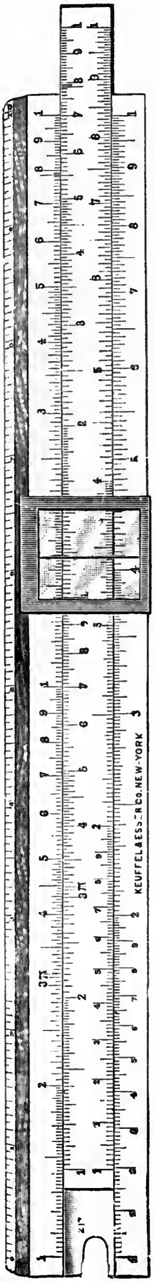

FIG. 8.

The factors in the numerator show the successive positions which the *runner* must take and those in the denominator the positions of the *slide*. (1) Start with *runner* opposite 6 on *scale*. (2) Bring 8 on *slide* to *runner*. (3) Move *runner* to 7 on *slide*. (4) Bring 2 on *slide* to *runner*. (5) Move *runner* to 3 on *slide*. The result is then read directly on the *scale* opposite runner.

The method of operation is thus seen to be one of alternately dividing and multiplying. Until complete familiarity with the operation of the instrument is established, the factors should be so arranged, substituting unity for any of the factors that may be missing.

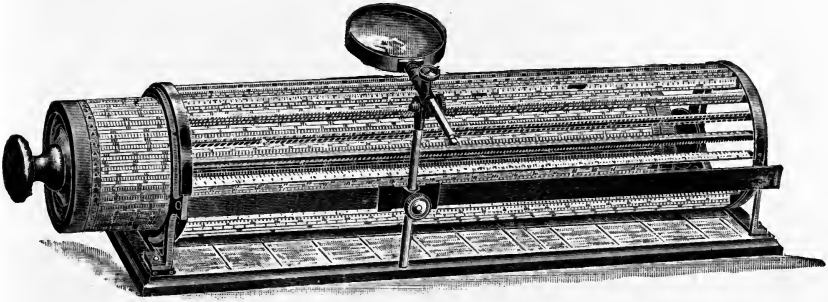

FIG. 9.

The numbers on the slide rule are to be considered significant figures, and to be used without regard to the decimal point. Thus the number on the rule for 8 is to be used as 8 or 80 or 800, etc., as may be desired, even in the same problem. The position of the decimal point in the result is readily determined by a rough computation. In case the *slide* projects so much beyond the *scale,* that the *runner* cannot be set at the required figure on the *slide,* bring the *runner* to 1 on the *slide,* then move the *slide* its full length, until the other 1 comes under the *runner*. Then proceed as before, moving *runner* to number on *slide* and reading results on *scale.*

The ordinary straight slide rule as shown in Fig. 8 is in two parts, one above and one below, either of which can be used. The upper, being to half the scale of the lower, is not so accurate, but is more convenient for rough computations. On the back of the *slide* are two other scales, usually of logarithmic trigonometric functions. The slide is reversed when it is desired to use them.

Thacher's Calculating Instrument.—This instrument, shown in Fig. 9, is adapted to calculations requiring a considerable degree of accuracy. Logarithmic scales, about 50 feet long are cut up into sections of about 18 inches and the various sections for the *slide* are placed on a cylinder about 4 inches in diameter. For the scale, the sections are placed on a surrounding cage. The marking is finely subdivided and a glass is provided for reading it. The method of operation is identical with that of the slide rule.

The Duplex Slide Rule.—This instrument, shown in Fig. 10, is graduated on both faces, thus practically giving two rules in one.

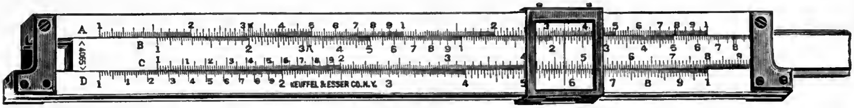

FRONT VIEW OF DUPLEX SLIDE RULE.

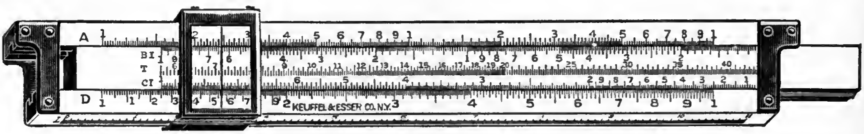

BACK VIEW OF THE RULE, SHOWING THE INVERTED SCALES.

FIG. 10.

The front face, shown in the upper view, is an ordinary slide rule in which both the *scale* and the *slide* are graduated from left to right. On the rear face, shown in the lower view, the graduations on the *scale* are the same as on the front *face* but the *slide* is graduated from right to left. The *scales* on both sides have their indexes in alignment so that the *runner,* which encircles the whole instrument, permits coinciding points on all scales of either face to be read off at once.

The advantage of the duplex slide rule lies in the reduction of the number of settings required in performing calculations involving several factors, thus saving time and giving increased accuracy. This follows because when setting to quantities on the inverted *slide,* the reciprocals of these quantities are given opposite on the regular slide, and vice versa, so that the operations of multiplication and division are reversed. What is a dividing operation with the regular slide becomes a multiplication process with the inverted one. Thus in compound multiplication the solution may be effected by a combination of multiplication and division operations, by using the regular inverted slides, with a consequent reduction in the number of settings. A similar method may be followed with a division operation when there are a number of factors in the denominator, as the multiplication by a reciprocal performs a division process.

Suppose it be required to solve a problem in the form $a \times b \times c$. With this form of instrument, using the designations for the scales as shown on Fig. 10, set b on C, to a on D and under c on C read the result.

If it be required to solve $\frac{a}{b \times c}$, set b on C to a on D and under c on C, read the result.

These operations, which are performed at a single setting of the duplex slide rule, require two settings with the ordinary slide rule and three with the single logarithmic scale.

Complete familiarity with this instrument can only be acquired from practice, when it will be found a great time saver.

Special Slide Rules.—Many calculating instruments for special purposes, have been made, involving the principles of the logarithmic scale and slide rule. Two of these for for calculating horse power will be found in another chapter.

PLANIMETERS.

The Amsler Polar Planimeter.—This is the original planimeter or *mechanical integrator* of Dr. Amsler and is shown in Fig. 11. A radius rod CP contains a needle point P which acts as the center around which it turns. This point is loaded with a weight to maintain it in position while in use. It is preferable to use the instrument on a drawing board which has been previously covered with a smooth, hard paper. Rough paper should not be used. The other end of the radius rod is pivoted to a saddle which slides along the square rod shown in a horizontal position, and which carries the tracing point F. This saddle also carries the recording wheel D

with its spindle and worm, together with the recording disc *G* and a worm wheel for actuating it. The saddle, which is secured to the tracing rod by means of a clamping screw *S*, contains the fine adjustment screw, shown at the left, by which it can be accurately placed in position on the tracing bar. The several marks on the tracing bar indicate the units in which the area to be traced may be recorded by the instrument, with the multiplier that is to be used in each case.

To use the instrument the saddle is placed on the tracing bar and carefully brought to the mark corresponding to the unit in which it is desired to find the area. The fixed center *P* is then placed somewhere outside the area that is to be traced. The tracing point *F* is then brought to a position on the outline of the figure and a point pricked there. The graduated disc *D*, wheel *G*, and vernier *E* are read and recorded. Trace the outline of the area, following in the direction of the hands of a watch, returning to the point previously marked. Again take the reading and substract from it the previous reading. Multiply this remainder by the constant indicated on the tracing bar and the result will give the area in terms of the required unit.

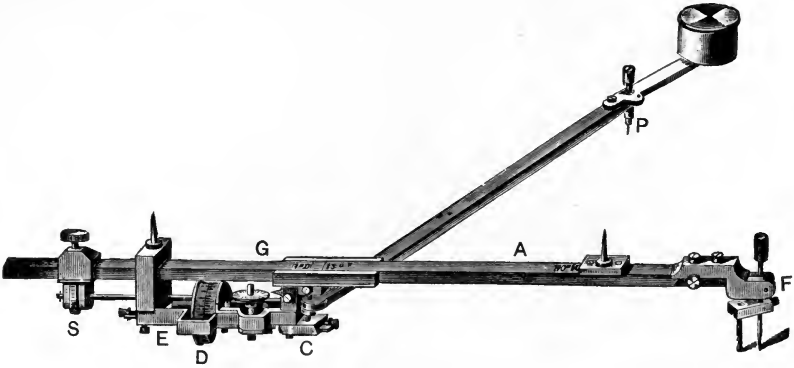

FIG. 11.

We may consider a circle of such diameter that with the fixed point *P* as its center and the tracing point following its circumference the tracing wheel will constantly move in a direction along its own axis, producing no rotation of the wheel. This will occur when the angle *PDF* is a right angle. Obviously no change in reading of the wheel can result and this circle is called the *zero circle.* In case an area to be measured is so large that it cannot be traced with the fixed point *P* placed outside, it may be placed inside the figure, but in this case a correction must be added equal to the area of the *zero circle.* This correction is marked on the tracing bar for each of the several positions of the saddle.

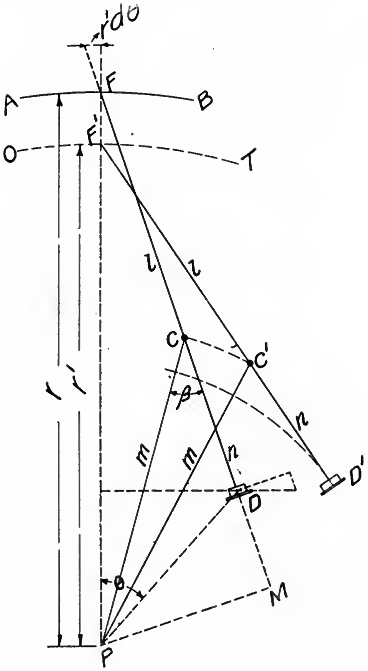

FIG. 12.

Theory of the Instrument.—In the diagrammatic Fig. 12, *OT* is the zero circle with radius *F'P* such that a perpendicular from *P* on *F'D'* falls at *D'*, passing through the plane of the wheel. *AFB* is a line lying outside of the zero circle with an area lying between it and the zero circle that is to be measured. Suppose the pointer *F* is made to trace an elementary portion of this area included in the angle *dθ*. The movement begins at *F*, extends radially to the zero circle, then along the zero circle through the angle $d\theta$, then radially through the distance $F'F$ to AFB, then along AFB through angle $d\theta$, back again to F. It is evident that the first and third movements are equal and opposite in direction, each causing a rotation of the wheel, but with the two movements serving to nullify each other. The second movement along the zero circle causes no rotation of the wheel. There remains the fourth movement along AFB which will be registered on the wheel when the pointer returns to F.

Consider the pointer in the position F, with the wheel at D and the pivot at C. While F is moving through the angle $d\theta$ its instantaneous center is P. C also swings about P which is therefore the instantaneous center for the whole rod FD. The movements of F and D are then in the proportion $PF : PD$. The linear movement of P is $PFd\theta$ and of D is $PDd\theta$. Drop a perpendicular from P on FD extended. The linear movement of D, which is proportional to PD, can be resolved into components, one parallel to FD which is proportional to PM and causes no movement of the wheel, the other perpendicular to FD, which is proportional to DM and causes a linear movement of the circumference of the wheel that we will call dR.

Let m = length of arm PC.
l = length of arm CF.
n = distance from pivot to wheel.

$$dR = DM\,d\theta = (m \cos \beta - n)\,d\theta. \tag{1}$$

The area of the element traced,

$$dA = \tfrac{1}{2}(r^2 - r'^2)\,d\theta. \tag{2}$$

In the triangle PFC we have

$$r^2 = m^2 + l^2 + 2ml \cos \beta. \tag{3}$$

In the right triangle $PF'D'$ we have

$$r'^2 = \overline{PD'}^2 + (l+n)^2 = m^2 - n^2 + (l+n)^2 = m^2 + l^2 + 2nl. \tag{4}$$

From (3) and (4),

$$\tfrac{1}{2}(r^2 - r'^2) = l(m \cos \beta - n)$$

and

$$dA = l(m \cos \beta - n)\,d\theta. \tag{5}$$

From (1) and (5)

$$dA = l\,dR. \qquad (6)$$

Integrating between the limits O and R

$$A = lR.$$

This shows that the *area is equal to the length of arm from pivot to tracing point, multiplied by the space registered on the circumference of the record wheel, and is independent of the other dimensions of the instrument.*

This is also true for areas not adjacent to the zero circle, or for areas partly inside and out, as can be proved by subtracting the areas between the zero circle and the given area. The demonstration is general.

The instrument is usually constructed so that the arm l is adjustable in length, permitting its use for any scale or for various units. In the No. 3 Amsler planimeter, shown in Fig. 11, two points are shown on the back, one on the tracing bar and the other on the saddle. The length between them equals l and by adjusting the saddle so that this length is that of an indicator card, the reading of the wheel will give the mean height of the card in fortieths of an inch.

Coffin's Averaging Instrument.—This instrument shown in Fig. 13 may be considered as a special form of Amsler's planimeter in which the radius rod m is of infinite length, the point C, Fig. 12, being constrained to move in straight lines. It is commonly employed for measuring mean effective pressures from indicator cards. It consists essentially of a rod having on one end a tracing point O, which is moved over the outline of the diagram. The other end of the rod contains a pin, which slides in the groove in the plate I, on the left of the figure, the pin being maintained in contact with the grove by the weight Q. The rod also contains the bearings for the spindle of the graduated wheel, near the lower edge of the figure. The rod is thus supported on three points, namely, the tracing point O, the pin Q, and the flange of the graduated wheel. Attached to the board are a pair of clips C and K, of which the latter is capable of being moved parallel to itself by means of the slide at its lower extremity. One of the horns of the rod which supports the graduated wheel is divided so as to form a vernier for the more accurate reading of the graduations.

To obtain the mean height of an area (in the figure an indicator diagram) slide the paper containing the area under the two clips

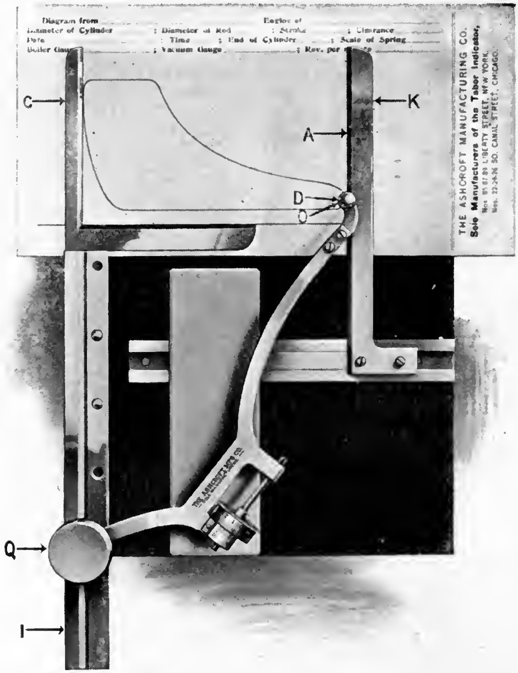

FIG. 13.

C and *K*, and arrange it so that a horizontal line of the diagram is parallel to the horizontal edge of the clip *C*, and the left hand end of the diagram touches the vertical limb of the same clip. In an indicator diagram the atmospheric line is horizontal. Now push the clip *K* towards the left until its inner edge touches the right hand end of the diagram (in the figure at *O*). Place the planimeter in the position shown in the figure with the tracing point at *O* where the clip *K* touches the diagram. Press the head *D* of the tracing point so as to make a mark at O, and then raise one of the horns while the graduated wheel is turned to zero. The outline of the diagram is now *carefully* traced over with the tracing point in a clockwise direction until the starting point O is reached. Now slide the tracing point along the clip K (keeping the eye on the rolling wheel) until the wheel indicates zero. Then OA is the mean height of the diagram and by using a scale graduated to represent the scale of the indicator spring the mean effective pressure can be read off directly.

Care must be taken to have the card properly adjusted as the instrument mechanically divides the area traced by the horizontal distance between the edges of the clips. It is necessary that this distance accurately represent the length of the card.

Slight errors in the measurement of the line OA are likely to occur. When greater accuracy is desired it is usual to read off the area of the card on the wheel when the pointer has returned to O. The wheel with vernier is graduated to read in square inches to 1/50 square inch. In this case it is better not to attempt to set the wheel to zero before beginning to trace the card, but note the reading of the vernier. The difference in reading at beginning and end of the tracing will be the required area. Dividing by the measured length of the card we obtain the length of the mean ordinate, which on multiplying by the scale of the indicator spring gives the mean effective pressure.

The Coffin instrument may be used to measure the area of any figure that can be placed in position on the board. The size and shape of the board, however, practically limits its use to the measurement of indicator cards, for which it is primarily designed.

Theory of the Coffin Planimeter.—Fig. 14 is a diagram representing the instrument, which, on inspection, is found to be the Amsler instrument in modified form. Q is the pivot moving in a vertical line CQ. The arm m becomes infinite. Continuing the comparison CQ may be considered as the circumference of the zero circle whose radius is also infinite. The registering wheel D is placed on an axis parallel to arm l to which it is fixed. It is evident that the exact position of D is immaterial, it being placed so as to give the most convenient arrangement. Suppose we make the pointer describe an elementary area of height *dx*, bounded on one side by *CQ*. The movement of the wheel in and out parallel to *OE* will be equal in amount and in opposite direction, one movement nullifying the other. No rotation can result from a movement of the pointer along *QC*. There remains then only the movement *dx* along the line *OX* during which the wheel moves also an amount *dx*. The component of this movement in a direction tending to rotate the wheel is $dx \cos\theta = \frac{adx}{l} = dR$.

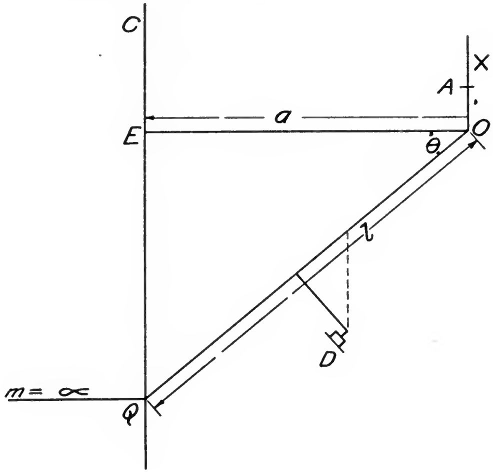

FIG. 14.

The elementary area is $dA = adx = ldR$.

Integrating between O and R

$$A = lR.$$

This expression is general, since all areas may be referred to *CQ*.

The Coffin Planimeter as an Averaging Instrument.—After describing an area lying between *EC* and *OX*, bringing the pointer back to the original starting point, suppose we move the pointer along *OX* until the reading of the wheel is again the same as before describing the area. Marking this point *A*, it is apparent from the preceding that $OA \times OE$ will represent the described area. If then care has been taken to adjust the figure on the instrument so that OE correctly represents its length, OA will represent its mean height. This property of the instrument is made use of in obtaining the mean height of indicator cards.

Several other planimeters have been devised, but in the U. S. Navy, the Coffin and Amsler instruments are generally employed, the former for obtaining mean effective pressures from indicator cards and the latter for measuring the areas of miscellaneous figures.

CHAPTER III.

INSTRUMENTS FOR RECORDING EXPERIMENTAL DATA.

Measuring Machines.

As a basis for all manufacturing on the interchangeable system, means of measuring with precision are imperative. The foundation for such a system is a Standard Measuring Machine, by which existing gages can be duplicated and new ones originated as occasion requires. With the machine illustrated in Fig. 15, skilled mechanics, accustomed to micrometric work, will measure positively to 0.00005 inch, which is the practical limit of exact duplication, and variations of 0.00001 inch may be readily detected.

The Pratt and Whitney Measuring Machine. Description.—This machine, shown in Fig. 15, has a heavy cast-iron bed supported by two lugs at one end and one at the other. The bed is accurately surfaced in straight lines and carries two head stocks, the one at the left, *A,* being rigidly secured, and the one at the right, *B,* being capable of movement along the bed. Each head stock has a spindle through it. The one at the left, *C,* is capable of movement in an axial direction and has a spring that tends to keep it to the right, bringing the stops at *D* in contact. The spindle in the moving head stock, *E,* is moved in and out by rotation of the graduated wheel *F,* which operates a screw having 50 threads to the inch. This spindle carries an index *G* which moves along a scale reading to 1/50 inch.

The wheel is graduated around its circumference, the main divisions being numbered from 0 to 200, and each main division being further divided into two parts. Movements of the spindle can therefore be read direct to

$$\frac{1}{50} \times \frac{1}{200} \times \frac{1}{2} = \frac{1}{20000} = 0.00005 \text{ inch.}$$

The end of each spindle is squared off and accurately ground and scraped to a true surface. The moving head stock has a clamp *H* for securing it firmly in position. It has also an adjusting screw *J* for fine adjustments. This has another clamp, not seen in the figure, which must be set up, *H* being slacked off, when fine adjustments are to be made.

Attached to the moving headstock, is a microscope, *K*, with axis vertical, which focuses on an index bar, not seen in the figure, attached to the rear side of bed plate. This bar carries a series of plugs with accurately surfaced faces, on each of which is drawn at right angles two intersecting hair lines, the intersections being spaced exactly one inch apart. Under the eye piece of the microscope is an adjustable glass, on which is a hair line drawn in a direction perpendicular to the plane of the machine. The wheel *L* enables this glass to be moved so as to bring this line into coincidence with the crossed lines on the plugs. *N-N* are rests for holding in position the work that is to be measured.

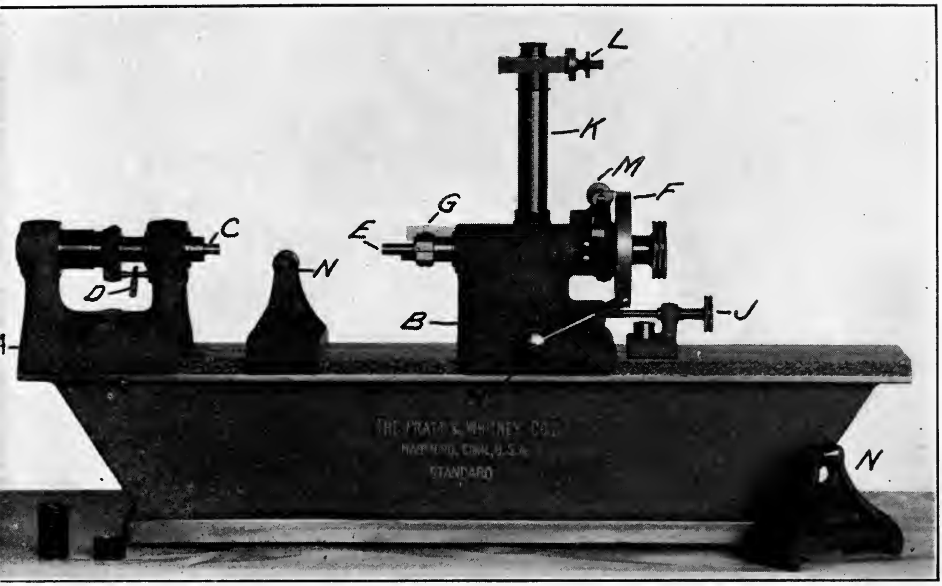

FIG. 15.

Operation.—To use the machine it must first be adjusted to zero. Run the index *G* to zero of the linear scale at top of head, and bring the index pointer nearly to zero on the graduated wheel *F*. Slide the head *B* nearly to contact between the measuring faces and adjust the latter by means of the adjusting screw *J* until the drop, or indicating plug, at *D* shows a tendency to move. Then clamp the head firmly and adjust *F* until the drop plug falls into a vertical position, but not entirely out of contact with the faces with which it is held. Then adjust the index for *F* to zero by means of the screw *M,* and bring the line on glass under eye piece to the zero mark on the index bar.

The machine is now adjusted for zero for its entire length, but care must be taken not to disturb the eye-piece line for any subsequent measurement of over one inch. If there is any doubt as to its having been moved, return to zero and make *sure* of it.

To measure a length greater than one inch, this range being obtained by the micrometer screw, bring the head *B* into range of the plug on index bar from which the measurement is to be taken and adjust the line under eye piece to coincide with mark on this plug, using screw *J* to make this adjustment. Then clamp the head and proceed. The micrometer screw should be run out to one inch if the graduation on the bar is less than the amount to be measured, and run back to zero if the graduated line is greater than the length required to be measured. This will be obvious after a few trials.

The pressure of contact is uniform at zero and at any distance in measurement of end gages, but precautions must be taken to avoid variation in temperature of the end gages, especially those of considerable length.

Flexure of the end gages must also be avoided, and if two supports are used they should be placed each at about one quarter of the distance from each end.

Care of the Machine.—Benzine, used with a soft woolen cloth, will clean the polished surfaces of the graduated plugs on the index bar, and a fine camel's-hair brush will afterwards serve to remove dust and not scratch them. The use of a fine grade of kerosene will be useful to clean the surfaces, as it will not rust them, and a little may be left on them without doing any injury or preventing the clear definition of the lines at any time.

The microscope must be clamped in place with each adjustment. It must be removed in order to place the covers over the index bar. On replacing it, it must be readjusted for zero.

Measurement of Pressure.

Fluid pressures are commonly measured by some form of gage in which the laws of deformation of elastic material are made use of. Such gages are of two kinds, *pressure gages,* which record pressures above the atmosphere, and *vacuum gages,* which record pressures below the atmosphere. In America and England, pressure gages are graduated to record pressures in pounds per square inch, except for very heavy pressures which are sometimes recorded in atmospheres. Vacuum gages register the difference between the atmospheric pressure and the pressure in the vessel to which attached. They are graduated to show this difference in *inches of mercury.* This system has been adopted to facilitate comparison with the barometer, which is read in inches of mercury. The difference between barometer and vacuum gage readings gives the absolute pressure in inches of mercury in the vessel to which the vacuum gage is attached. One cubic inch of mercury weighs 0.49 pounds. Hence to convert inches of mercury into pounds per square inch, multiply by 0.49.

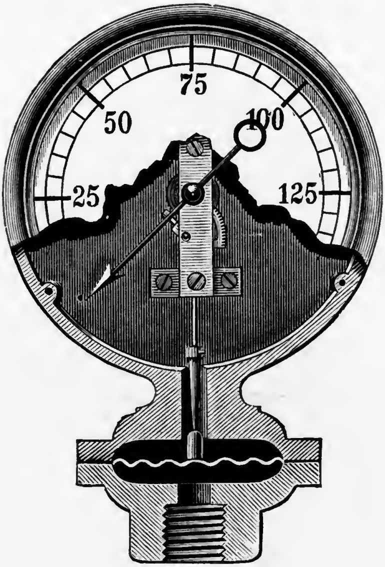

FIG. 16.

Pressure gages and vacuum gages are similar in construction. They are of two general types, (1) the *diaphragm* gage, one of which is shown in Fig. 16, and (2) the *bent tube* or *Bourdon* gage, shown in Fig. 17. In the first of these types the diaphragm is in equilibrium under atmospheric pressure. If pressure be applied to either side it is deflected an amount proportional to the pressure applied. This deflection causes a movement of the attached strut, which is communicated through the connections shown, to the central spindle, carrying an index that moves around a graduated dial.

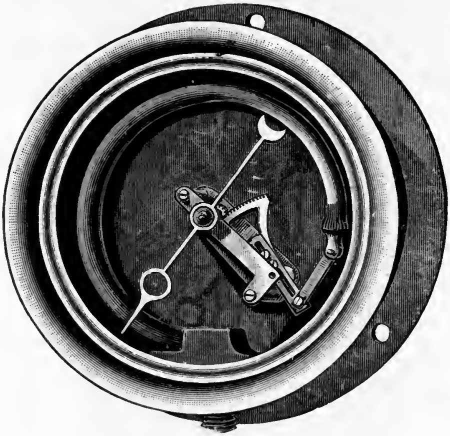

FIG. 17.

In the second type, there is a flattened tube communicating with the fluid under pressure. If the pressure be increased, it tends to round out the flattened section, and thus tends to straighten the tube. Fig. 17 shows a single tube gage, in which the end of tube is connected through levers with a sector that gears with a pinion on the spindle-carrying index as before. If this tube be opened to a vacuum, it will tend to still further flatten, and the ends will tend to come closer together, with the reverse movement of index over dial. The same construction is therefore used for both pressure and vacuum gages.

The double tube gage, shown in Fig. 18, is of similar construction, except that both ends of the tube are free to move, and the actuating mechanism for the index is suspended between them.

The connection for introducing the pressure is in the middle of the tube, which is secured in place. This form of gage has the advantage that the tube may be drained completely when the pressure is off, which gives it somewhat greater durability.

A Compound Gage is often used for receivers, jackets, or other places where the steam pressure is sometimes above and sometimes below the atmosphere. The *O* indicates atmospheric pressure. The dial is graduated to the right of the *O* for pressures above the atmosphere in pounds per square inch, and to the left of the *O* for pressures below the atmosphere in inches of mercury. It will be noted that on a simple vacuum gage, the connections are such that the index moves to the right, but on a compound gage, when registering vacuum, the index moves to the left.

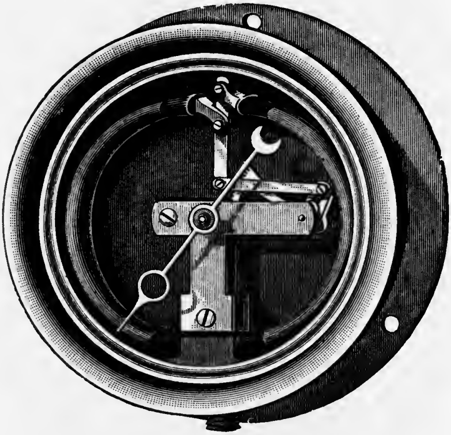

FIG. 18.

Recording Pressure Gage.—There are several forms of this apparatus, in all of which the principle of operation is the same. The mechanism for registering the pressure is similar to that in an ordinary gage, but the moving index is longer, and the spring is stiffer, so that the limit of pressure is recorded in a comparatively small arc of the circle swept by the index. The end of index carries a pen or pencil, and the pressure is recorded on a sheet of paper that receives motion from a clock mechanism. The paper is laid off and marked for intervals of time in one direction and for intervals of pressure in the other. The apparatus then gives a continuous record of the pressure on the gage. In some forms of the apparatus, where the paper is unwound from a spool, this record continues for several days on the same sheet of paper. In other forms, as in that described below, the paper must be changed every 24 hours.

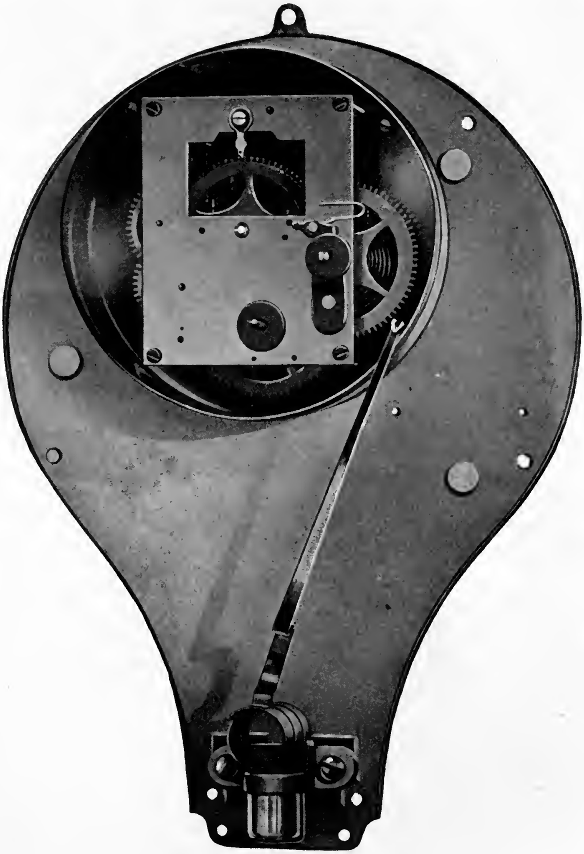

FIG. 19.

Bristol's Recording Pressure Gage.—As used in recording pressures in pounds per square inch, this is to be seen in the laboratory, as shown in Fig. 19. The recording mechanism contains a flattened tube, similar to that of the single tube Bourdon gage, except that it is wound in a spiral, and the pressure when applied causes it to unwind to an extent proportional to such pressure. The index is carried from the end of the spiral and has a pen attached to its free end. This traces a line on the revolving paper dial which

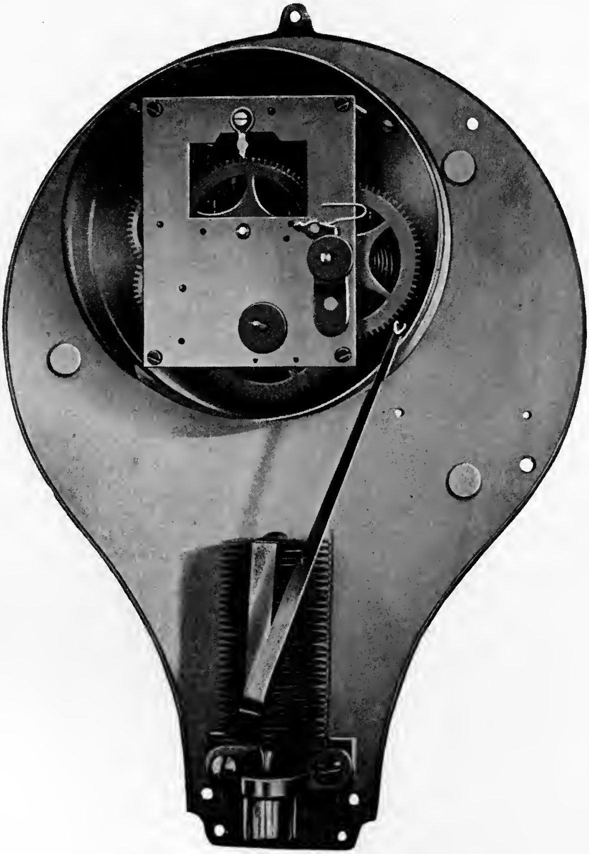

FIG. 20.

gives a continuous record of the pressure. The paper, when placed on the apparatus, is adjusted so as to bring the time, as marked on the paper for the instant of making such adjustment, under the pen. This dial will then be good for 24 hours, when it must be removed, and is then marked with the date and any other data that it may be desirable to record.

Fig. 20 shows another form of the same apparatus, used for recording air pressures. The tube is bellows-shaped and its tendency to elongate is resisted by a metal strip on one side. The pen arm is attached directly to this diaphragm tube and pressures are recorded on a dial in the same manner as before.

FIG. 21.

Fig. 21 shows the exterior of the gage, with the form of dial used to give the continuous record.

Uehling Differential Pressure Recorder.—The working principle of the Uehling Differential Pressure Recorder includes a gravity *U* tube, *AEB,* Fig. 22. *B* is suspended by a rod *M* from a bell float *I* which is buoyed by mercury contained in a cylindrical vessel *J*. *M* passes freely through a central tube *H* and in front of the recording paper which is fed by clock work and kept taut by, and automatically wound on, a receiving roller *T*. A small horse-shoe magnet *N* pivoted on a bracket fastened to rod *M* serves as a pen holder. The pen is kept to the paper by the magnetism of the horse shoe acting on a narrow iron strip *P*. *B* is connected to *A* and *D* by means of flexible tubes *E* and *F*. *F* communicates with the top of floating chamber *B* through *C,* and *E* with the bottom of said chamber as shown. *Z* is an equalizing tube controlled by cock *X*. *W* connects with the lower and *Y* with the higher pressure.

Connections having been made, for example, with a Venturi or Pitot meter; open *X* then open *W* and *Y*. The pressure will be equalized through *Z* and the mercury in *A* and *B* will stand at the same level; *B* carrying the major part of the mercury will pull down the bell float until the weight of mercury displaced by the latter equals the weight of *B* with its mercury content and connections. When equilibrium is thus established, the pen will point to the zero line. Closing *X* the higher pressure will be confined to *D,* the lower pressure to *A,* and in consequence mercury will be driven from *B* to *A* until the pressure difference is balanced by the mercury head in *A*. As mercury flows from *B* to *A* the weight suspended by *M* diminishes and the bell float rises, carrying with it the pen and also chamber *B*. As the pressure difference diminishes, the mercury returns to *B,* its weight increases and the reverse movement takes place.

The cross sectional areas of the stationary leg *A,* the floating leg *B* and the bell float *I* are so related that the pen will move over the entire scale covering the available width of the chart for any predetermined pressure difference to be recorded.

This instrument can be calibrated to record pressure differences from 0 to 1 inch, to from 0 to 30 inches of mercury head or more, under a total pressure of 200 lbs. and over. In all cases the calibration on chart covers 3 inches in width.

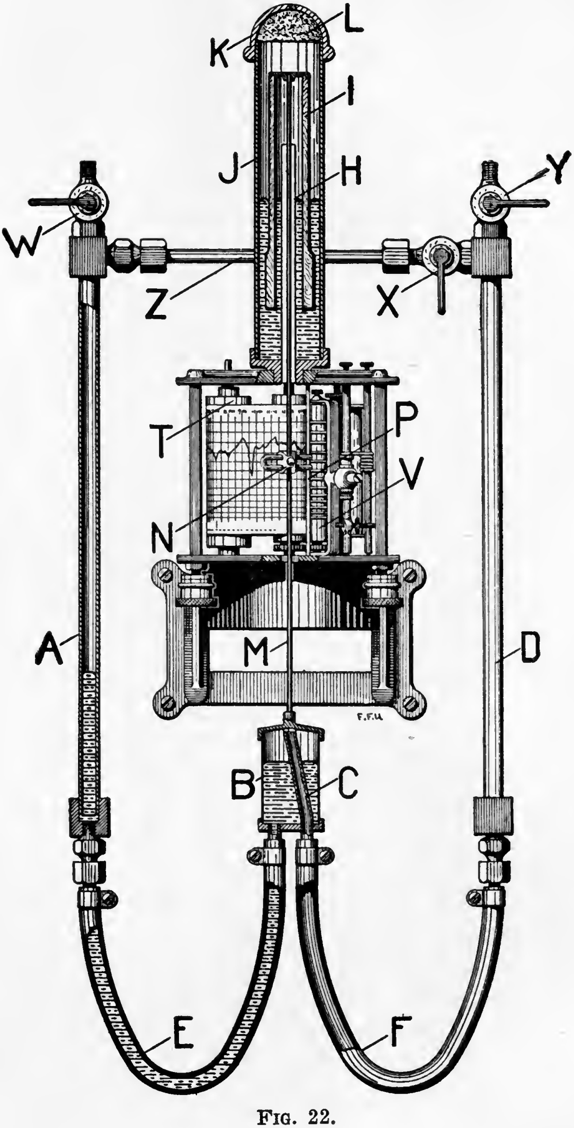

FIG. 22.

The recorder can be conveniently fastened to any wall or column. It makes a continuous rectilinear record of pressure differences or rate of flow of either liquids or gases. Used in connection with a Venturi or Pitot meter described in Chapter VI, it may be calibrated to record cubic feet per hour or other units as may be desired.

Testing Pressure Gages.—Fig. 23 shows a late form of apparatus for testing gages, as made by Messrs. Schaeffer & Budenberg and installed in the laboratory. It is in two parts, for testing pressure gages and vacuum gages. On the left is the arrangement for testing pressure gages. Pressure is applied by means of a screw plunger, that is worked in and out in a cylindrical chamber by means of the hand wheel shown at the extreme left. A reservoir, containing oil or glycerine, connects with this chamber through the valve *A*. Valve *B* connects the chamber with a vertical cylinder, in which is an accurately fitting piston of 1/4 square inch area of cross section. This piston carries a tray on which the disc-shaped weights, shown at the back, are placed for directly measuring the applied pressure. The tray and piston, together, weigh 1 1/4 pounds, so that when balanced, without the addition of weights, the pressure per square inch in chamber is 5 pounds. A pipe connects the chamber with the mountings shown at the front, on which gages may be placed. The gage under test is mounted at the left, the valve *C* serving to shut off or turn on the pressure. The mounting at the right, to which pressure is admitted through the valve *D*, is for a standard gage, but may be used for ordinary testing work, in which case two gages may be tested at once.

Operation.—To test a gage, the connection to reservoir is opened and all other connections are shut off. The plunger is forced in its full length and the reservoir is filled with oil. Then the plunger is withdrawn as far as it will go in the chamber, and the connection to reservoir is shut off. The gage for test is mounted, its connecting valve is opened, and the piston for carrying weights is put in place. Opening the valve under the piston, weights are added to the tray in increments of 5 or 10 pounds, and pressure applied by forcing in the plunger until the piston lifts, each time a weight is added. To prevent piston or index sticking, the piston is spun around each time the gage is read, thus ensuring a correct reading.

In case the gage is found to read incorrectly, the index should be removed and properly set. In cheaply constructed gages a different error will sometimes be found at low and at high pressures. In such cases the correction should be made at the average pressure for which the gage is to be used.

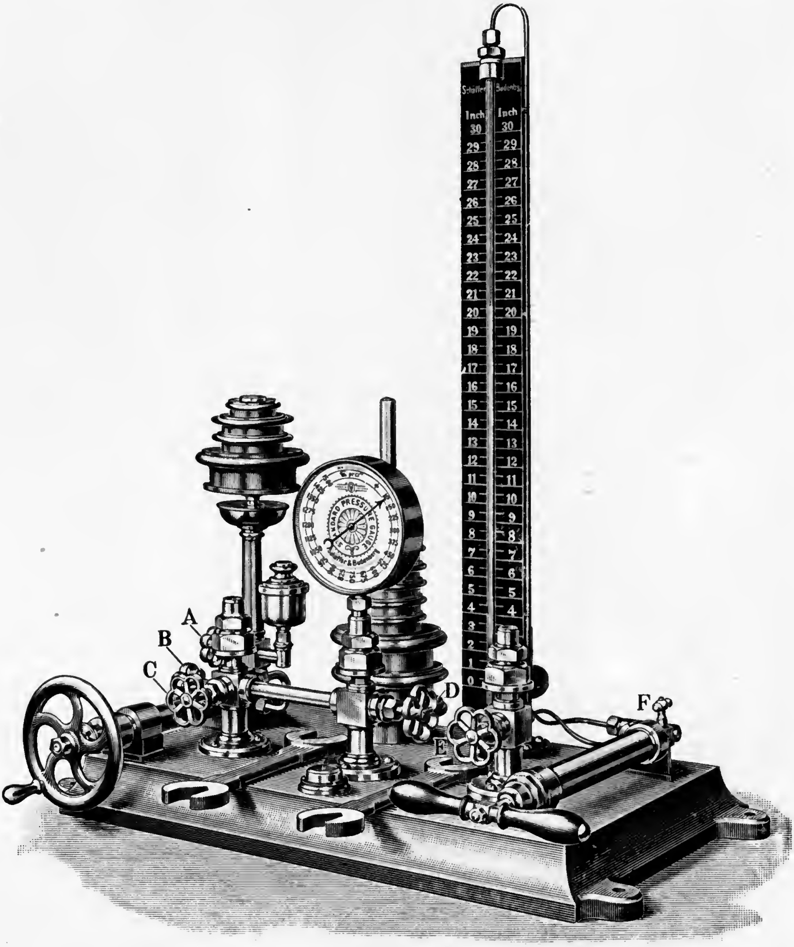

FIG. 23.

Where many gages are to be tested at the same time, it will be found most convenient to first test the "standard" gage, then shut off the vertical cylinder and compare the readings of the other gages with the "standard." A standard gage should, however, never be relied upon, unless tested immediately before or after using.

Testing Vacuum Gages.—The apparatus at the right in Fig. 23 is for testing vacuum gages. A vacuum pump at the extreme rights connects through cock F with a mercury column and through valve E with the mounting on which the gage to be tested is placed.

Testing Gages on Board Ship.—The above apparatus is sometimes supplied to large vessels. The usual form of apparatus supplied is similar to that described for testing pressure gages, but in a light portable form with the vacuum pump omitted. Its operation is the same as that of the larger apparatus.

Vacuum gages on board ship are usually tested by comparison with one another. If a more accurate test is desired and no means are supplied for conducting such test, they may be taken ashore for this purpose at a navy yard at frequent intervals.

Manometers.—This name is applied to a gage used to register a difference between two pressures, usually where the difference is small. Such gages are used to show the air pressure in a closed fire room, or the draft pressure in a flue passage, where the difference between the variable pressure and the atmospheric pressure is observed. The common form of manometer is a U-shaped glass tube, partially filled with water, one leg of which is connected to the body of air or gas, the pressure of which is to be measured, and the other leg is connected to the atmosphere. A scale shows the difference in height of the water in the two legs of the tube, and thus indicates the pressure in *inches of water.* For indicating slightly greater pressures, a mercury-filled manometer is sometimes used, in which the indication is of course in *inches of mercury.*

Measurement of Temperature.

Ordinary temperatures of water and steam are measured by means of mercurial thermometers. Before proceeding with any experiment requiring accuracy, such thermometers should be carefully calibrated, unless they are standard thermometers of known accuracy. The bulb of the thermometer and so much of the stem as is ordinarily immersed in the liquid whose temperature is to be taken, is packed in melting ice and after the mercury becomes stationary the reading is taken. It is again placed in a vessel of boiling water that is open to the atmosphere and the reading again taken. Readings are thus obtained at the known temperature of 32° and 212° on the Fahrenheit scale or 0° and 100° on the Centigrade scale. From these the proper corrections are derived to be applied to any thermometer reading. It is usual to assume that the scale of the thermometer is constant above the boiling point to the limit of the tube. For this to be true it is necessary that the area of cross section of the tube should be constant.

High Temperatures. Pyrometry.—Mercury boils at 675° F., under atmospheric pressure. It becomes necessary to resort to apparatus other than the ordinary mercurial thermometer for the measurement of temperatures above about 500° F. Such instruments are known as high temperature thermometers or *pyrometers.* Several different types have been constructed as follows:

Gas thermometers.
Pneumatic pyrometers.
Mercurial pyrometers.
Expansion pyrometers.
Calorimetric pyrometers.
Thermo-electric pyrometers.
Resistance thermometers.
Reflecting pyrometers.

The Gas Thermometer.—This is used as the standard by which to calibrate all other high temperature thermometers, and for research work where great accuracy is required. It is not suited for ordinary experimental work on account of its lack of portability and its high cost.

Instruments of this type are usually specially constructed for the service that is required, but the principle of operation in all such instruments is the same. The relation between pressure volume and temperature of a gas follows the law $PV = CT$, where P is the absolute pressure, V is the specific volume, C is a constant and T is the absolute temperature. A large bulb is constructed to contain

FIG. 24.

a fixed volume of gas. Various materials have been used for the bulb, but the best results are obtained with bulbs of platinum, or where very high temperatures are to be measured, of an alloy of platinum and iridium. Air and hydrogen have been used in the bulb, but the best results have been obtained with nitrogen.

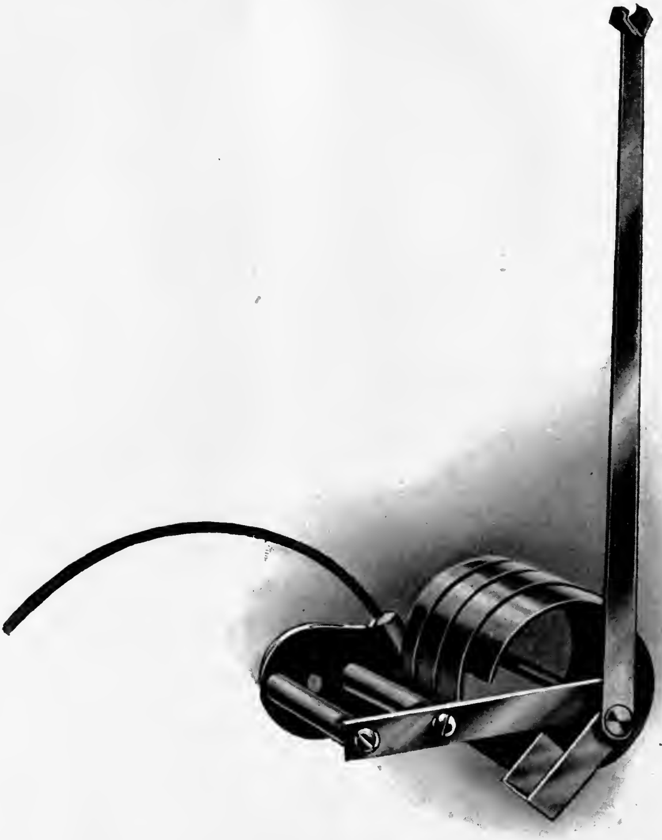

FIG. 25.

The bulb being subjected to heat, the rise in temperature is measured by the rise in pressure of the gas. This is registered on a gage, graduated to read the degrees rise in temperature.

The Industrial Thermograph is a practical instrument based on the principle of the gas thermometer. The general appearance of the instrument is shown in Fig. 24, while the moving element is shown in Fig. 25. There is a metallic bulb, connected by very fine copper tubing with the coiled tube shown in Fig. 25. Instruments on this principle are constructed for all ranges of temperature up to about 1000° F. In instruments made for temperatures below 50° the bulb is filled with alcohol and the long capillary tube is omitted, the bulb being placed close to the pressure tube. For instruments having a range between 50° and about 500° sulphur dioxide (SO_2) is the medium employed, while for instruments intended for a range above 400° the bulb is filled with nitrogen, making the instrument in this case a true gas thermometer. The recording gage shown in the figure may be replaced with an indicating gage. In any case the gage is graduated for degrees rise in temperature.

Uehling's Pneumatic Pyrometer.—The underlying principle of this instrument is based on the same law that governs the operation of the gas thermometer. It is illustrated diagrammatically in Fig. 26. A small steam aspirator, working at a uniform rate, draws air through the apertures *A* and *B*, causing a partial vacuum in chambers *C* and *D*. The same amount of air must necessarily pass through each aperture. If *A* and *B* are the same size, and if the air remains at a fixed temperature during a given length of time, the suction in chamber *C* will be practically twice that in

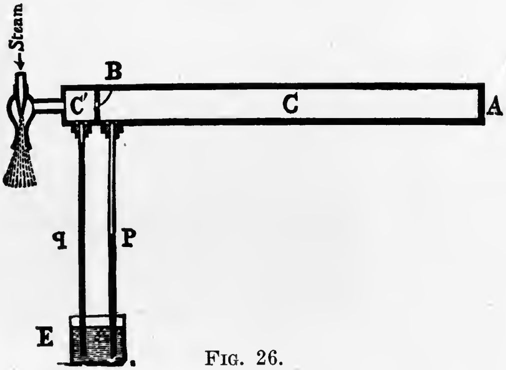

FIG. 26.

chamber *D*. If, however, this air is heated when it passes through *A*, but again cooled to a lower fixed temperature before it passes through *B*, the specific volume will be higher on passing through *B* and therefore the pressure in *C* will be lower. In the same way any change in temperature of the air flowing through *A* will have its influence on the amount of vacuum in chamber *D*. Thus the manometer tube *P* may be calibrated to indicate the temperature of the air passing through *A*.

Fig. 27 shows a diagrammatic disposition of all the parts combined in the complete instrument.

The interior of the pipe *e, f, g, h, i* from aperture to aperture, together with the branches *q* and *s*, constitute the chamber *C* of Fig. 26. Its inlet from the atmosphere is through the opening *a* at the bottom of filter *I*, and its connection with chamber *C′* is through the pipe *l*.

The aspirator *D* exhausts into the chamber *G*, keeping it at a constant temperature of 212°. The steam and condensed water, together with the air drawn through the aperture, escape through the pipe *t* at atmospheric pressure. Opening the valve 6 steam enters the aspirator *D*, and sucks the air through the tube *m*, out of the chamber *C′* and produces a suction, which is kept constant by the regulator *H*, as shown by the manometer *p*. With a constant suction in *C′* and cocks 2 and 4 open, air will enter at *a*, pass through the filter *I*, where it is purified, then through the connection *b* into the fire tube. It flows forward in the annular space between the two tubes *c* and *f*; as soon as it reaches the platinum tube *d*, which protrudes from the cooler, it becomes heated and enters through the aperture *A* into the chamber *C*, at the temperature surrounding the exposed end of the fire tube, which is the temperature to be measured. After passing *A*, the air flows through the pipe *e, f, g, h* into the coil *i*, where it assumes the temperature of 212°, at which it passes through aperture *B*, thence by the connection *l* into the chamber *C′*, from which it is drawn by the aspirator *D* through *m*, and discharged with exhaust steam and condensed water.

The branch pipes *s* and *q′* connect respectively with the recording gage *L*, and the manometer *q*, which is placed in proximity to the temperature scale, as shown.

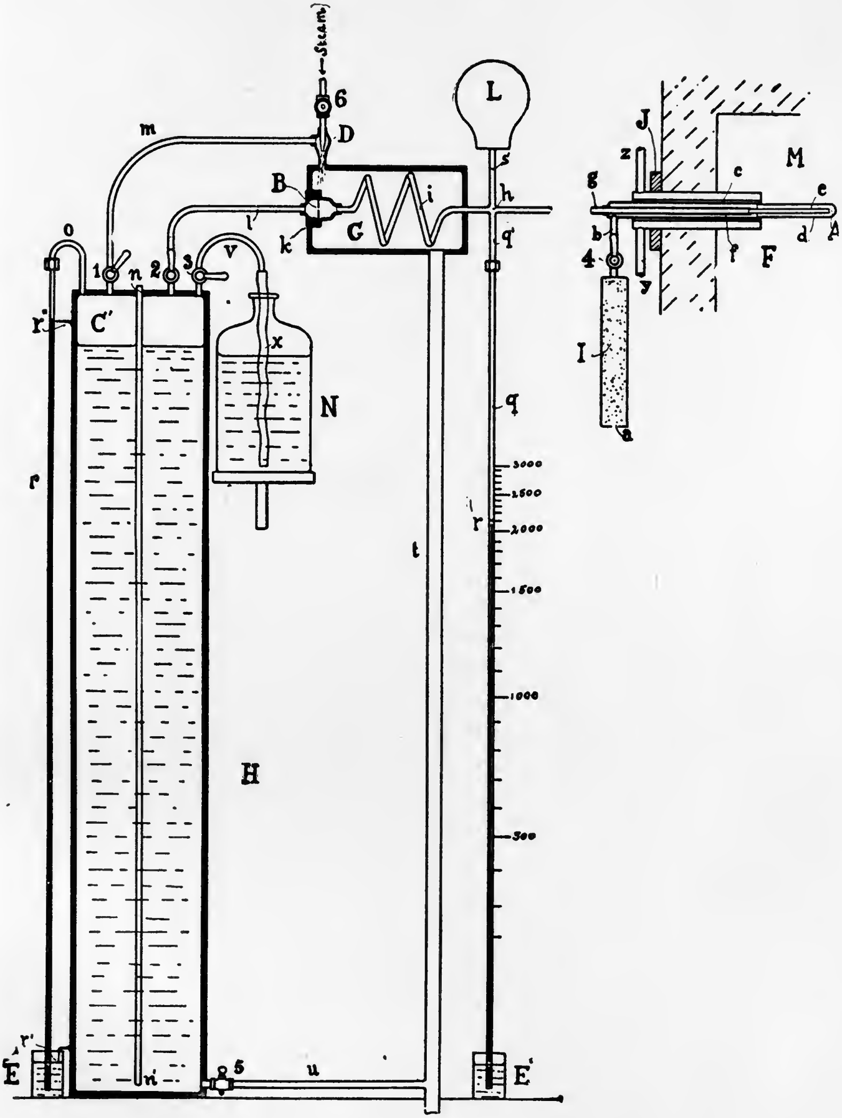
←Steam
6
D
m
L
s
B
i
h
G
l'
k
q'
o
1
n
2
3
V
C'
r'
x
N
J
z
M
g
c
e
b
d
A
4
f
F
y
I
a
q
r
3000
2500
2000
1500
1000
500
r
t
H
r'
E
5
u
n'
E'

FIG. 27.

This combination, therefore, fulfils all the conditions—viz., air is drawn through the instrument by a constant suction. It passes through aperture *B* at a constant temperature. Aperture *A* is so located that the air must enter at the temperature to be measured, hence the indication of the manometer *q* will vary with the temperature at *A*, as we have demonstrated, and can be read off directly on the temperature scale placed beside the same.

Fig. 29 shows the instrument complete, with recording gage and with portable fire tube. The *fire tube* is shown in section in Fig. 28. The aperture *A* of the diagram is located near the closed end of a small platinum tube *e*, placed within a larger tube *d*, which is also of platinum with closed end. Both *d* and *e* are brazed into drawn copper tubes *c* and *f*, and these tubes are surrounded by a water jacket *F*. Before entering aperture *A* the air is drawn through the cotton filter and through the annular space between tubes *d* and *e*, where it reaches the temperature to be measured.

Connections to the fire tube may be made of flexible tubing, thus enabling the tube to be inserted successively into different furnaces within a range of 150 feet.

This instrument is accurate and durable and has a temperature range up to about 3000° F. While the fire tube is portable, the instrument itself must be set up permanently and for this reason it is not well adapted to ordinary marine work.

Mercurial Pyrometer.—This is similar to the ordinary mercurial thermometer in that there is a bulb and tube filled with mercury, but the space in tube above the mercury is filled with nitrogen.

As the tube is heated the mercury expands and compresses the nitrogen, the resultant increase in pressure on the mercury raising its boiling point. These pyrometers are made in both portable and stationary form. The end which contains the nitrogen may take the ordinary form of a mercurial thermometer, or may terminate in a pressure gage calibrated in degrees of temperature. The latter form of instrument is more easily read and a recording gage may be fitted from which a chart can be taken showing the temperature changes throughout each twenty-four hours. In Fig. 30 is shown a typical mercurial pyrometer with recording gage and flexible tube connection.

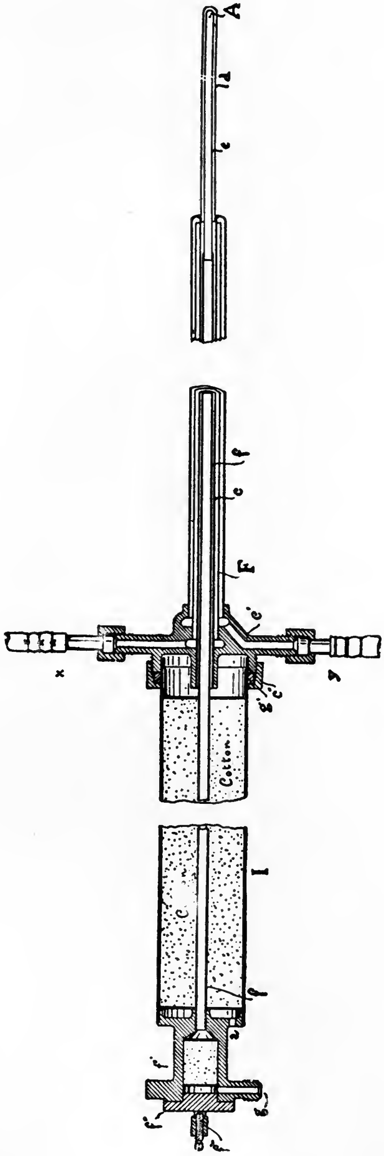

FIG. 28.

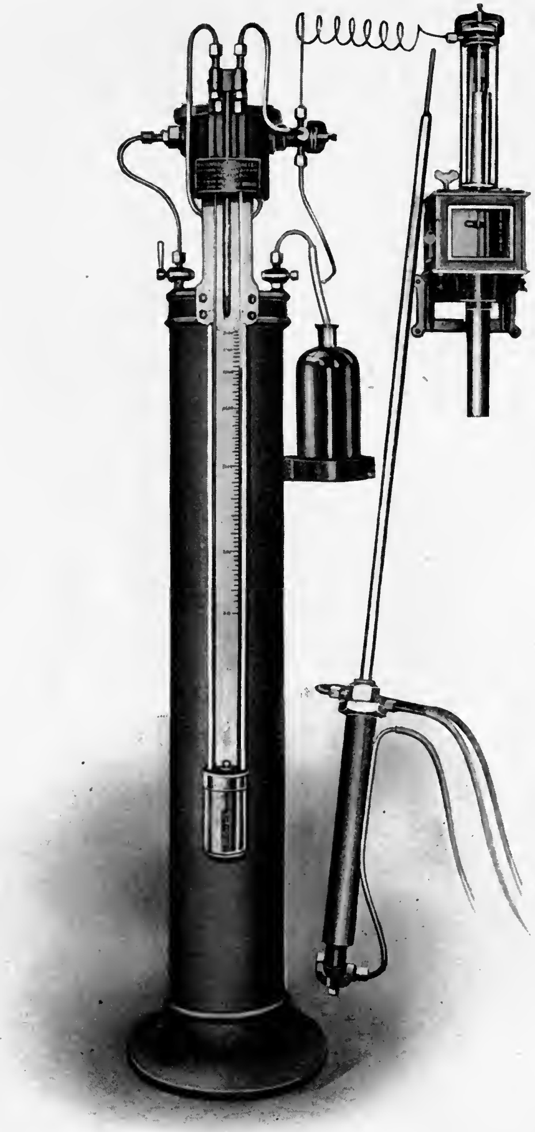

FIG. 29.

Mercurial pyrometers are fairly accurate, and are particularly adapted to measuring uptake and chimney temperatures. They are constructed to read as high as 1000° F.

Expansion Pyrometers.—The difference in the rate of lineal expansion of two metals is the principle upon which expansion pyrometers are based. For the same rise in temperature, copper expands 60 per cent more than iron. In the expansion pyrometer a tube of copper is inclosed in a tube of iron. At the end to be heated the tubes are securely fastened to each other. At the other end they are attached to a set of multiplying gears which actuate a needle pointer over the face of a properly calibrated dial. It is necessary to expose the entire length of the expansion tubes to the full effect of the heat to be measured; if this is not accomplished, error will result as the proper amount of elongation has not been obtained. When the

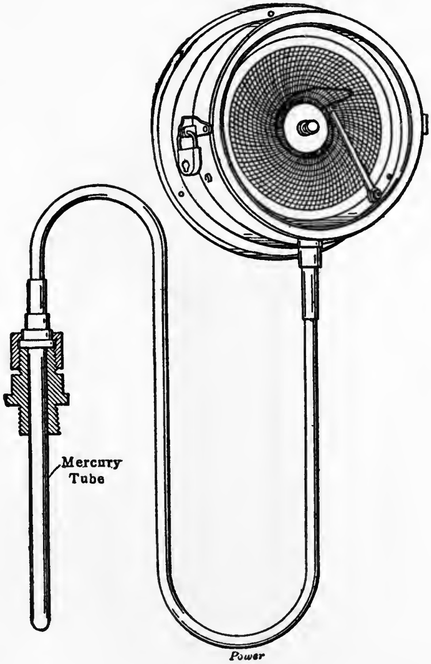

FIG. 30.—Mercurial Pyrometer with Recording Gage.

pyrometer is first inserted, the pointer will act rapidly in one direction or the other and give an untrue reading temporarily. This is caused by the outer tube heating and expanding more rapidly than the inner one. As soon as the inner tube heats up and expands proportionately, the pointer will correctly indicate the temperature.

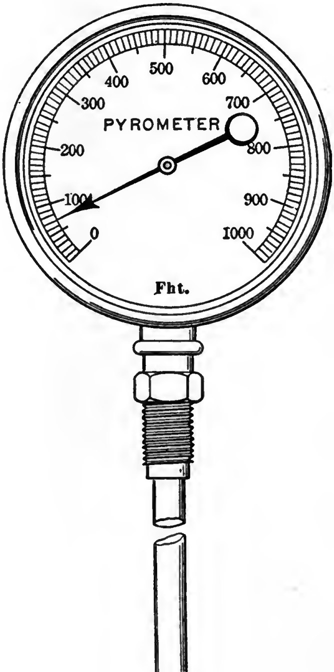

FIG. 31.—Expansion Pyrometer.

When an expansion pyrometer has been used repeatedly for temperatures near its limit, the indicator will no longer return to the position indicating the temperature of the atmosphere. A permanent change has taken place in the length of one of the tubes. By loosening a set screw the dial may be adjusted to correct the variation.

A standard type of expansion pyrometer is shown in Fig. 31. In spite of the fact that these pyrometers get out of calibration rather easily they are capable of giving close results if understood and carefully handled. They will indicate temperatures as high as 1500° F.

Calorimetric Pyrometers.—The method of indicating temperature by the calorimetric pyrometer is the reverse of that used in determining specific heats by the water calorimeter.

A given weight of some metal, the specific heat of which is known, is heated to the temperature to be measured and then instantly plunged into a known weight of water. The rise in temperature of the water is noted. The formula for finding the temperature is:

$$X=T+\frac{Wt}{ws}$$

in which,

X = Temperature to be measured in degrees Fahrenheit;
T = Final temperature of the water;
W = Weight of the water in pounds;
t = Rise in temperature of the water;
w = Weight of the metal, in pounds;
s = Specific heat of the metal.

A calorimetric pyrometer is an apparatus by means of which the temperature may be found without using each time the formula previously given. It usually consists of a copper cup which is insulated to prevent loss from radiation and which has gage marks upon it for a definite amount of water. Fastened to the cup and so arranged as to be properly immersed, is a small thermometer. A sliding scale is attached to the thermometer. A copper or platinum ball completes the outfit. The scale on the thermometer is calibrated with the quantity of water which the instrument holds and with the metal ball so that the rise in temperature of the water causes the thermometer to indicate correctly the temperature being measured.

This pyrometer is very liable to inaccuracy. The results which it gives vary with the skill and care used in its manipulation. Its cheapness and portability, however, recommend it where approximate results are satisfactory. It may be used for temperatures up to 3000° F.

Thermo-Electric Pyrometers.—When rods or wires of two dissimilar metals are joined at one end, they compose a thermo-electric "couple" or "element." When the junction is heated, a difference of electrical pressure is established between the cool ends. If a circuit is made by joining the cool ends together, either directly or by means of a conductor, a current will flow. The strength of the current depends upon the nature of the "element" and the difference in temperature between the hot junction and the cool ends or cold junction. The deflection of a galvanometer placed in the circuit may be calibrated, then, to indicate the temperature at the hot junction.

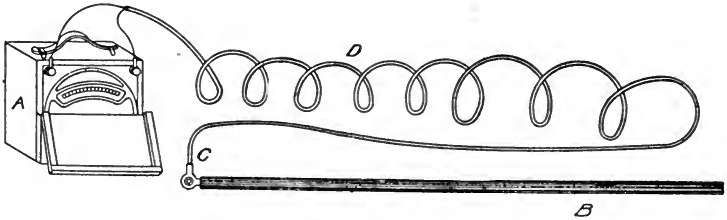

FIG. 32.

A thermo-electric pyrometer consists of the thermo-electric couple, the galvanometer and a device for compensating for the changes in temperature at the cold junction. The hot junction is protected by a fire-proof insulation of asbestos and carborundum, and the whole is encased in a common iron pipe for further protection. In most makes for commercial use, the change in temperature of the cold junction is taken care of by shifting the scale on the galvanometer a few degrees one way or the other when the temperature at the cold junction is observed to change appreciably. Fig. 32 shows a thermoelectric pyrometer outfit of the usual type. A recording device is sometimes added.

Thermo-electric pyrometers are adaptable to many uses. With proper handling they will give accurate results. Their great advantages are convenience and simplicity. Repeated reheating will cause the potential of the thermo-electric couple to change, necessitating frequent recalibration and an occasional renewal of the couple. Where high temperatures are measured and continuous service required, the cost of upkeep may be considerable. Depending on the composition of the thermo-electric element, these pyrometers will measure temperatures up to 3000° F.

For temperatures up to 1100° F., the element is made of nickel and constantan, a composition consisting of 60% copper and 40% nickel. For temperatures ranging between 1100° and 2300° F., nickel and a special carbon are used, and for higher temperatures up to 3000° F., platinum and an alloy consisting of 90% platinum and 10% rhodium or iridium make up the element.

Resistance Thermometers.—The electrical resistance of pure platinum varies directly with its temperature. This property is made use of in the measurement of high temperatures where the problem becomes one of measuring the electrical resistance of a piece of platinum wire, heated to the temperature under investigation.

A coil of platinum wire is wound in crossed layers of mica and then, with the lead wires, is encased in a porcelain tube which protects the wires and holds them in position. The tube, with its contents, is known as the *bulb* and is shown in section in Fig. 33.

FIG. 33.

Fig. 34 shows a diagram of the electrical connections in the apparatus. *A, B,* and *C* correspond to the three contact points on the head of the bulb. *R* is a fixed resistance which at normal temperature corresponds to the resistance of the platinum coil. *rr* are fixed and equal resistances. *yy* are the resistances of the two lead wires. These are equal and may be taken as negligible in the following explanation of the principles of the instrument. *DE* is a wire, of uniform section and having a resistance *L,* joining the two resistances *rr.* It is connected by a sliding contact *F* through the battery *G* to *C.*

Let x = the resistance of the platinum coil, varying under change of temperature.

Let z = the resistance of *DF.*

It will be noted that the diagram is that of a Wheatstone bridge, in which the balance is produced by varying the position of the sliding contact F on the wire DE. From this we see that

$$\frac{x}{R}=\frac{r+L-z}{r+z}, \text{ and } x=R\frac{(r+L-z)}{(r+z)}.$$

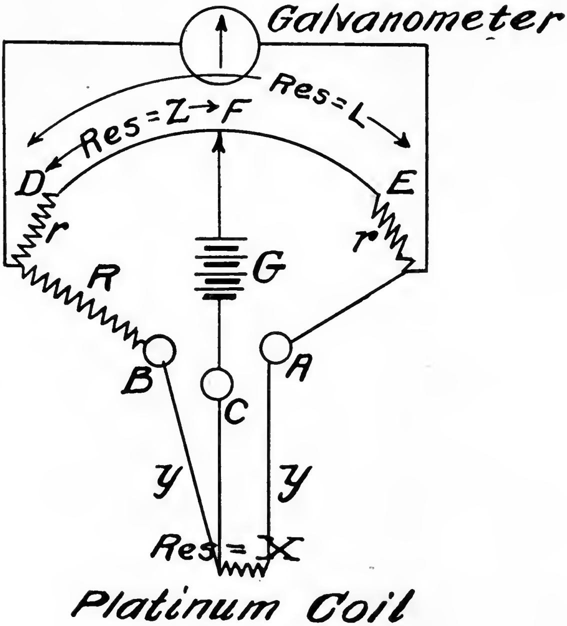

FIG. 34.

For the minimum reading of the thermometer, $z=L$ and

$$x=R\cdot\frac{r}{r+L}.$$

For the maximum reading, $z=0$ and

$$x=R\cdot\frac{r+L}{r}.$$

The known relation between the temperature and the resistance of pure platinum, as determined by the experiments of Le Chatelier, Callendar, and others, gives a means for graduating the scale for the sliding contact to indicate directly degrees rise in temperature.

Fig. 35 represents a diagram of the electrical connections of the instrument, as installed in the laboratory. There are wire connections for six different bulbs, enabling temperatures to be read in rapid succession for different parts of the furnace and connections of a boiler while making a test. The switch *A* in the upper left-hand corner is, as will be noted, arranged for taking readings from any bulb. The sliding resistance wire, above described, is arranged in circular form, corresponding to a range of 2200° F. for the instrument. A galvanometer is seen at *C*. *B* is a key for making or breaking the connection from a battery as may be desired. Fig. 36 shows the outside appearance of the instrument.

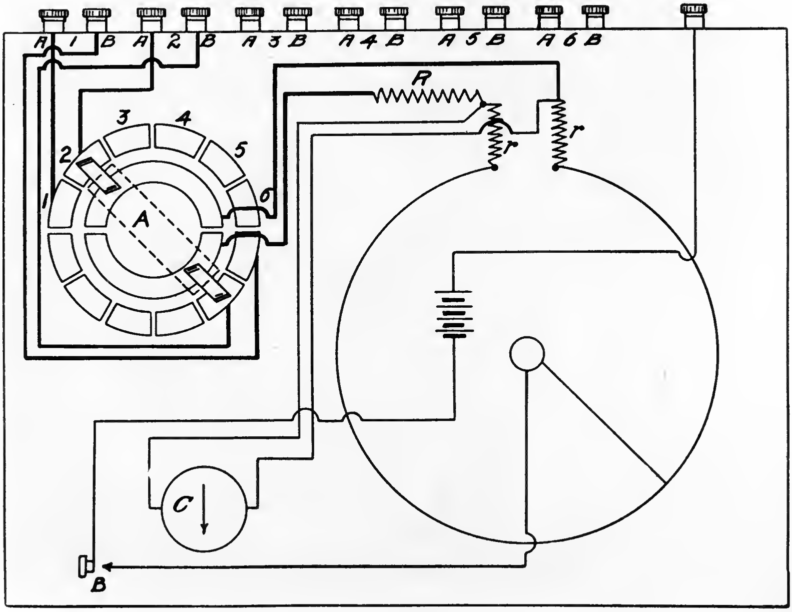

FIG. 35.

To take a reading, all connections having been made, the bulb is inserted in the place the temperature of which is to be measured and the index is moved around until the galvanometer balances and remains stationary, when the temperature is read off directly. To test the instrument for adjustment, the bulb should be immersed in a well-stirred liquid of known temperature for a period of at least 15 minutes. With the index moved to the point on dial corresponding to this temperature, the galvanometer should balance if the instrument is in proper adjustment. If not, the proper correction, as thus obtained, should be applied.

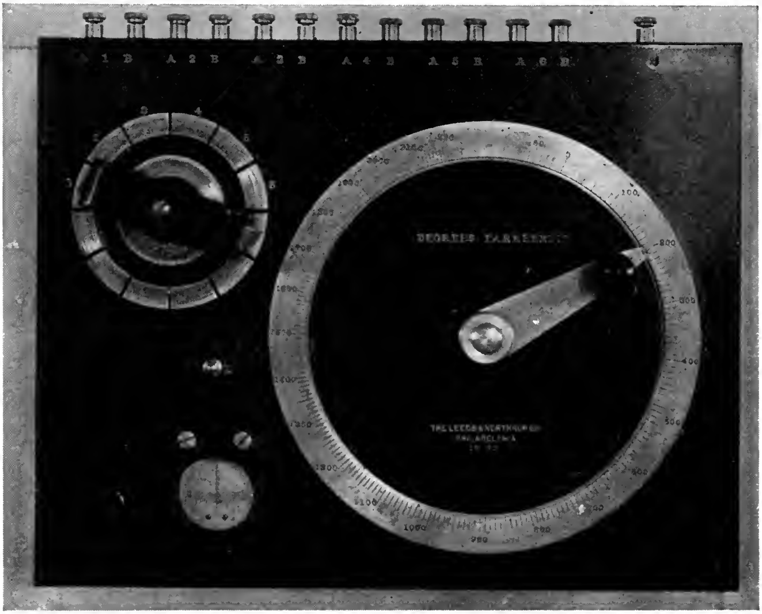

FIG. 36.

This instrument is capable of registering continuously temperatures up to 1800° F. By withdrawing the bulb each time after taking a reading, temperatures up to the full limit of the instrument may be taken without injury to it. It is very useful for taking practically simultaneous temperatures of the flue gases at different points in a boiler. It has been calibrated by comparison with an air thermometer and found to compare with it very favorably in accuracy. It is portable and can be set up where needed, while this cannot be done with the air thermometer.

Reflecting Pyrometer.—This instrument is shown diagrammatically in Fig. 37 where the heat rays from *AB* enter the open end *EF* of a tube and impinge on a concave mirror *C,* having one focus at *EF* and another at *D,* where there is placed the hot junction of a small thermo-couple.

The mirror *C* concentrates upon *D* the heat image of the aperture *EF* filled with radiant heat from the hot bodies and this heat image raises the temperature of the thermo-couple, giving rise to an electro-motive force. Connection is made to an indicating millivoltmeter by means of a flexible cable and the indications of this millivoltmeter are calibrated to read in degrees of temperature direct.

The relative position of the mirror *C,* the sensitive device *D* and the aperture *EF* are all fixed so that the focusing is done once for all and is never changed in use.

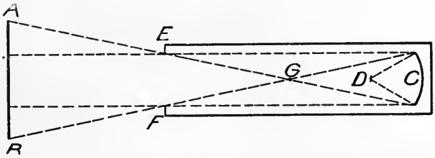

FIG. 37.—Diagram of the Receiving Tube.

In order that the aperture *EF* may be entirely filled with radiant heat from the hot body *AB* it is necessary that the tube be brought within a certain maximum working distance. This working distance varies with the size of the hot body and is measured from the apex *G* of the cone *GAB.*

The rule for the working distance is that the center ring must be within ten times the diameter or smallest dimension of the hot body. Any distance less than this maximum working distance is satisfactory and will not materially affect the reading. Looking at the diagram in Fig. 37, it will be seen that if the hot body *AB* were brought nearer to *G* the only result would be that the outer edges of it would not be in the measurement as they could only radiate heat to the walls of the tube and these are made non-reflexing.

The instrument is calibrated to give direct temperature reading without corrections. It is best adapted for indicating furnace temperatures for which purpose it is fairly accurate.

Revolution Counters.—Each main engine shaft is provided with a continuous recording rotary counter for registering the number of revolutions made. The general appearance of the instrument is shown in Fig. 38 and some of the details of the mechanism, from which its operation will be understood, in Fig. 39.

FIG. 38.

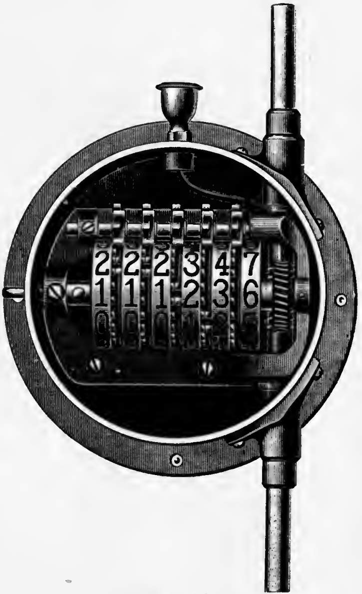

FIG. 39.

Maneuvering Indicator.—On twin screw ships there is fitted in each engine room an indicator consisting of a dial numbered from 0 to 100, with a red and a green hand for indicating the relative speed of the engines. The green hand is actuated by the starboard engine and the red hand by the port engine. Each of the hands makes one complete revolution of the dial for 100 revolutions of the actuating engine.

The indicators serve as guides in maneuvering. One engine, usually the starboard, is operated at the required speed and, if the same speed of revolutions is desired, the other engine is regulated so that the two hands move together. In turbine-driven ships, fitted with triple screws, the maneuvering indicators are worked from the outboard shafts in the same manner as in twin-screw ships. The maneuvering and backing turbines are fitted on the outboard shafts. The center turbine does not come into action until the vessel is fairly under way, and in working the ship it is allowed to run idle.

Multiple Screw Installations.—Differential Counter Gear. In multiple screw installations it has been found that there may be considerable variation in the revolutions made by the various shafts and the speed will correspond to the mean revolutions of all the shafts. It therefore becomes important to have a device for registering the mean number of revolutions. This is accomplished by fitting differential gear to operate a counter. In Fig. 40 *A* and *B* are operated each from different shafts. A differential wheel *C* is operated from *A* and *B* through the miter wheels *D, E* and *F*. The counter is actuated from *C,* the revolutions of which correspond to the mean revolutions of the two shafts. A third differential gear may be installed which will give the mean of the readings of the other two, thus enabling us to obtain directly the average revolutions of all the shafts in a four-shaft installation.

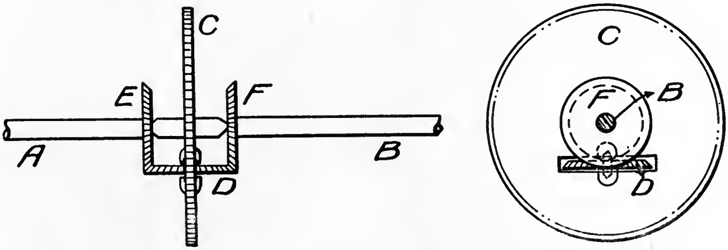

FIG. 40.

A differential counter has also been devised for giving the mean revolutions of three shafts, for use on triple-screw ships.

Tachometers.—These instruments are employed to indicate directly the number of revolutions a shaft is making. Fig. 41 illustrates the general principle on which nearly all such instruments are constructed. The shaft *a* gives rotation to a set of flying balls, c_1, c_2, c_3, c_4. With increased velocity the balls swing out around the center *b,* against the restraining force of a spring, and in so doing pull down the links *d* and move the sector *h*, operating an index, which is mounted on the axis of the wheel *i*. The index moves over a dial graduated in revolutions per minute. The wheel *i* is a spur wheel meshing with a small pinion, carrying a balance wheel at *gf*.

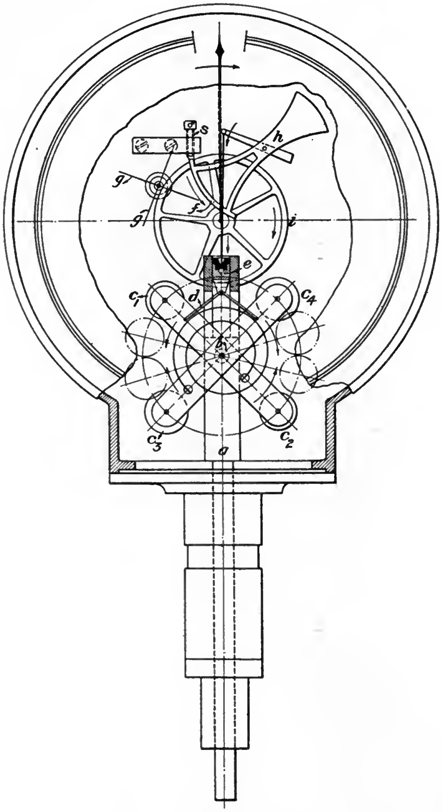

FIG. 41.

This prevents fluctuation of the index. A stop screw *s*, permits adjustment of the index.

Tachometers of this type have been fitted on fast running shafting of turbine-driven vessels, where they are very useful in indicating the approximate number of revolutions. They cannot, as a rule, be depended upon to indicate with exactness.

Portable Tachometers.—An instrument of this type is shown in Fig. 42. There is a set of change wheels operated by the milled head at the right of the figure, which serve to change the range of the instrument. The setting is indicated automatically by a movable plate as shown.

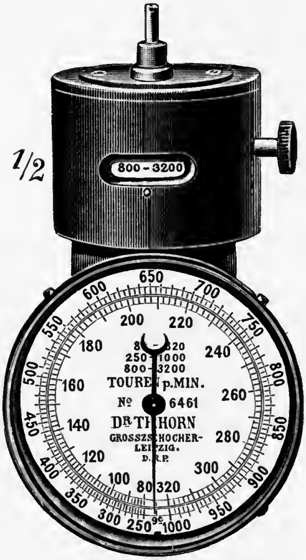

FIG. 42.

The Hutchison Marine Tachometer.

The Transmitter.—Clamped around the propeller shaft *P,* Fig. 43, is split sprocket *A*. Rotation is imparted to driven sprocket *B* by the silent chain *C*. Sprocket *B* is loosely mounted on shaft *D*. Two oppositely coiled flat spiral springs *E-E′* transmit the rotation of *B* to flywheel *F* and shaft *D,* one end of each spring being attached to the sprocket *B,* and the other end to flywheel *F*. Any irregularity of rotation of *B,* caused by variations in the angular velocity of shaft *P,* is smoothed out by *E-E′*, imparting to *F* and *D* a constant resultant speed. The springs are protected against breakage from sudden reversal of *P* by the radial arm *G* engaging a pin *H* attached to flywheel.

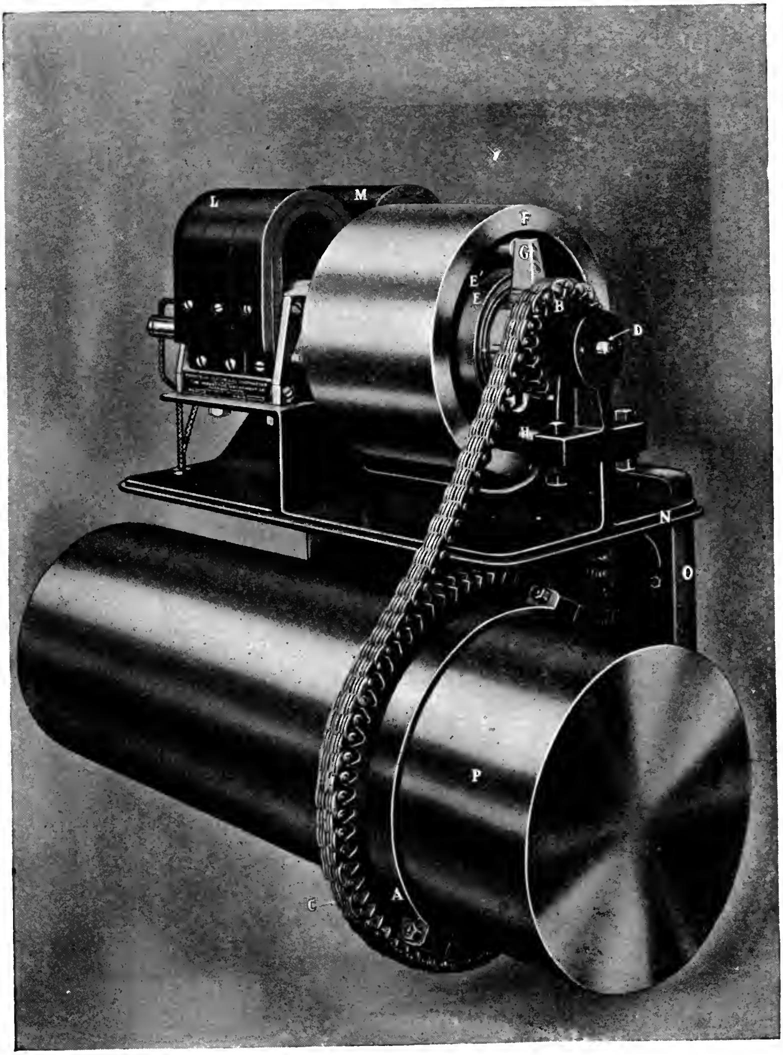

FIG. 43.

On the inside face of flywheel, at the end opposite from that occupied by E-E' are cut gear teeth. These engage pinions which actuate the shafts of magnetos L and M, supplying alternating current.

One pinion is keyed to inductor shaft of its magneto M.

The other pinion is not keyed, but is so mounted that when the direction of rotation of main shaft P is AHEAD the inductor of magneto L is in the exact rotative relation to its armature and pole shoes as that of magneto M. The current from L is therefore in absolute phase with that from M. But when P is reversed in rotation, the pinion rotates idly on shaft of magneto L until it has traveled one hundred and eighty degrees before rotating same. This causes the inductor of L to assume an exactly opposite relation to its armature and pole pieces as obtains at the same instant in M, and hence the current from L is one hundred and eighty degrees electrically out of phase with M.

We have, therefore, two wires from L and two from M, running to the indicators. At AHEAD these circuits are in phase. When P rotates ASTERN, one is one hundred and eighty degrees electrically out of phase with the other.

The Receiver.—The indicating instrument, shown in Fig. 44, has two coils—a moving coil to which the pointer is attached, and a fixed or field coil. The moving coil is connected electrically to one of the magnetos, the fixed coil to the other. When the two magnetos are in phase, the pointer is deflected to the RIGHT, indicating R. P. M. AHEAD. When they are out of phase, the pointer is deflected to the LEFT, indicating R. P. M. ASTERN. The faster the shaft P, Fig. 43, turns in either direction, the higher the voltage generated, and the greater the deflection of the pointer calibrated to conform thereto.

The Hopkins Electric Tachometer consists of a small direct-current magneto generator and an indicating electrical voltmeter of high grade. The two parts of the system are connected by a two-wire insulated cable.

The principle of operation of this apparatus depends on the fact that when a system of coils is rotated within a permanent magnetic field, a potential is generated in direct proportion to the speed of rotation of the moving coils. It is therefore possible to calibrate the voltmeter in terms of the speed, which in this case is represented by revolutions per minute.

Speed recorders working on the principle of the Hutchison and Hopkins instruments have been proposed many times, but have not been very successful, due principally to the imperfect mechanical details. The indications at the voltmeter cannot be true if there is any variation in the resistance of the system. The Hutchison instrument overcomes these difficulties in large measure by using alternating current and thus avoiding the use of a commutator. In the Hopkins instrument it is claimed that such difficulties have been eliminated, by making the commutator bars on the magneto of pure platinum and the brushes of 20 karat gold. With this construction there are no oxidation changes or insulating salts formed.

FIG. 44.

McNab Marine Register and Indicator.—A small air pump, with piston 2 inches in diameter and 3 inches stroke, designated by the inventor as the *Agitator*, is connected to the valve gear, or other moving part of the engine capable of giving a small reciprocating motion. This is connected by half-inch piping with one or more *Indicators* and *Registers* in various locations about the ship as may be desired. The *indicator* is a rod connected with a small piston which is pulsated with each stroke of the engine. The *register* is a counter which is worked through a ratchet by the *indicator*. There is a separate *register* and *indicator* for ahead and astern, both on the same board. A separate pipe is provided for ahead and astern, with cocks at the *agitator*, so arranged that they are opened or closed automatically when the engine is reversed.

The Davison Speed Regulator.—This instrument is one of several embodying the same general principles and has for its object the keeping of a certain definite speed of the engine when this is needed while steaming in squadron, standardizing over the measured mile, etc.

The device consists essentially of the following parts: Refer to Fig. 45 (II); the vertical shaft S'', carrying a worm wheel at its lower end and a miter wheel at its upper end; this small worm wheel T is connected by means of a worm S' shaft and bevel gear to some part of the main engine in such a manner that shaft S'' makes one revolution for each revolution of main engine. On this vessel the worm and worm shaft S' are connected to the vertical shaft of the main engine counter. The miter gear on upper part of vertical shaft S'' meshes with another miter gear on horizontal shaft S'''; this shaft in turn carries a hard bronze friction wheel, or pinion F, and is a little larger in diameter than the miter gear on shaft S'''. The position of friction pinion F on shaft S''' is determined by setting of the micrometer screw E and micrometer wheel O. F is made to revolve with shaft S''' by means of a feather and key. In the instrument, shown in Fig. 45, the micrometer arm E is graduated by fives from forty-five revolutions to one hundred and twenty revolutions, and the micrometer wheel O is graduated by tenths from zero revolution to five revolutions, so that the instrument is capable of being set for revolutions from forty-five to one hundred and twenty, by tenths. In other instruments the graduations on E and O are arranged to suit the range of speed of the engine for which the instrument is intended.

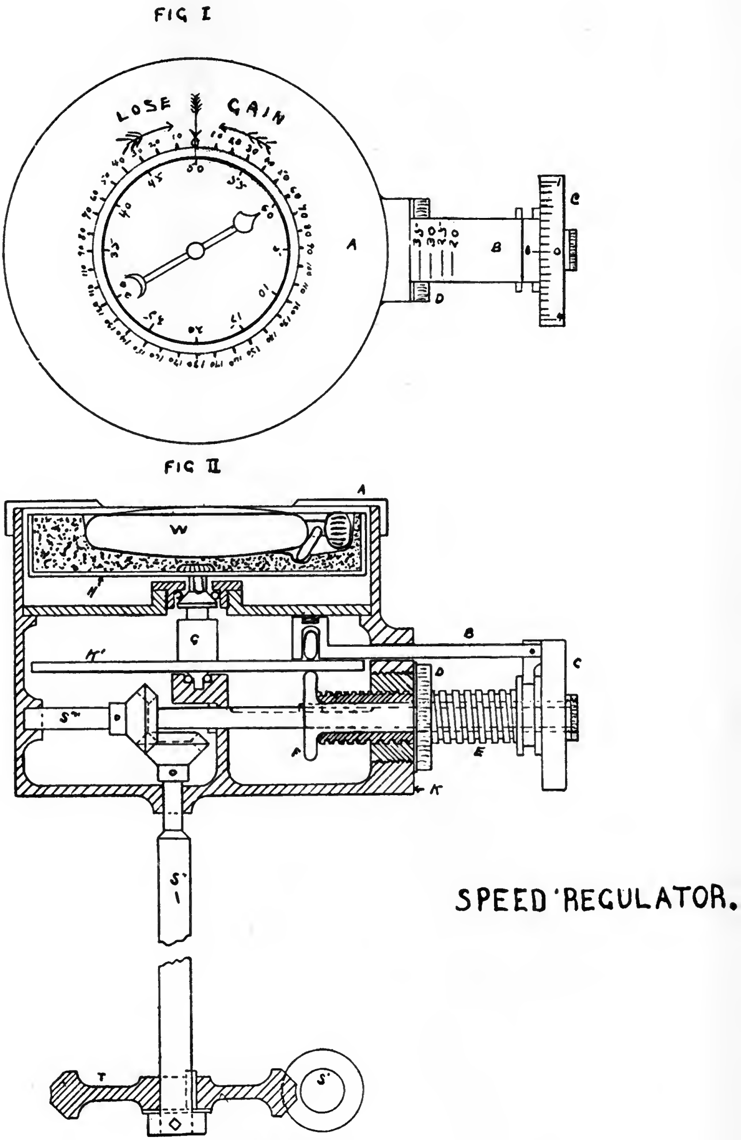

FIG. 45.

The locking nut *D* holds the setting for revolutions in permanent place. There is an arm *B* which carries on its inner end a small roller whose object is to hold the friction disk *K′* in constant frictional contact with the friction pinion *F*. The friction disk *K* is supported top and bottom by ball bearings, and carries with it a velvet-lined pad *H*, on which rests a timepiece. In this case the timepiece is a large, ordinary commercial stop watch. The gear connections to the engine, or moving part driven from the engine, are such as to cause the timepiece to be carried in a counter-clockwise direction. The whole mechanism is enclosed in a brass casing and looks very much like a small compass binnacle. It is mounted on the floor plate at the working platform in the engine room so that the man on watch at the throttle looks directly down on the timepiece and graduated circle in Fig. 45 (I).

Referring to Fig. 45 the circle on the top of the instrument, which is fixed, as far as the mechanism is concerned, is graduated and marked from left and right of the central point in *yards*, the scale of marking depending on the number of yards made by the vessel for each revolution of the engine. This distance and consequently the whole number of revolutions corresponding to a total gain or loss of a particular number of yards will vary, depending on the draft of vessel, condition of bottom, state of sea, etc., but curves are furnished with the instrument which permit corrections to be easily applied.

The operation of the revolution indicator is as follows: The timepiece being wound and fitted in its place on the velvet-lined pad the hand will make one revolution every minute. By means of the micrometer wheel and screw the instrument is set for the revolutions ordered, then, as long as the throttle is manipulated so as to maintain this speed, the hand of the watch virtually stands still and points constantly to the radial arrow shown in Fig. 45 (I). If at any instant the engine room receives word from the bridge that the ship is, say, forty yards behind position, the cap *A* is shifted with reference to the hand of the watch, in the direction indicated by the circular arrow, marked "gain," the radial arrow would then be forty divisions to the left of the hand of the watch; and since the hand of the watch moves at constant and uniform speed it would be necessary to impart a faster counter-clockwise motion to the timepiece than it previously had, in order to bring the hand of the watch into coincidence with the radial arrow. *Vice versa,* if the ship had been ahead of position by a given amount the top rim would have been shifted in the direction indicated by the curved arrow, marked "lose," and, in this case, the counter-clockwise motion of the instrument would necessarily have to be reduced by throttling down until the hand of the timepiece caught up again to the radial arrow. It is the work of only an instant to set the instrument for any given speed, and to lock it in place by means of locknut *D,* and the top rim *A* can also be shifted instantly.

Special Engine Counters.—For taking the number of revolutions made by an engine during a short time, as for example, on the measured mile, it becomes necessary to adopt a device for taking the exact counter reading in fractional parts of a revolution at the instant of making an observation.

The Taylor Counter.—This instrument substitutes for the usual numbered wheels in the ordinary type of counter, a set of printing wheels. By pressing an electric contact at the instant of making the observation, a printed record is made. This instrument gives excellent results in slow moving engines, but with high speed turbines the records are frequently blurred and it becomes necessary to check with other instruments.

The Bailey Counter.—This consists of a train of wheels the shafts of which carry indexes moving over dials. The wheels in each pair are in the ratio 10 to 1 and the instrument when connected with the shaft registers continuously up to 10,000,000 revolutions. The long pointer travels around the full face of the instrument once in 10 revolutions and its dial is graduated in tenths of a revolution. This pointer and the two pointers in the hundreds and thousands places have loose pointers which travel with them. On making an electric contact at the instant of taking the observation these loose pointers are held and the exact reading can be taken with certainty. The loose pointers are then reset ready for the next observation.

This counter gives excellent results, but there is no permanent record and for careful work its readings should be checked by independent observers.

As installed for trial trips each of these special counters is connected to the shaft independently.

The Precision Tacograph.—This instrument, shown in Fig. 46, is a recording tachometer and is employed to record accurately slight

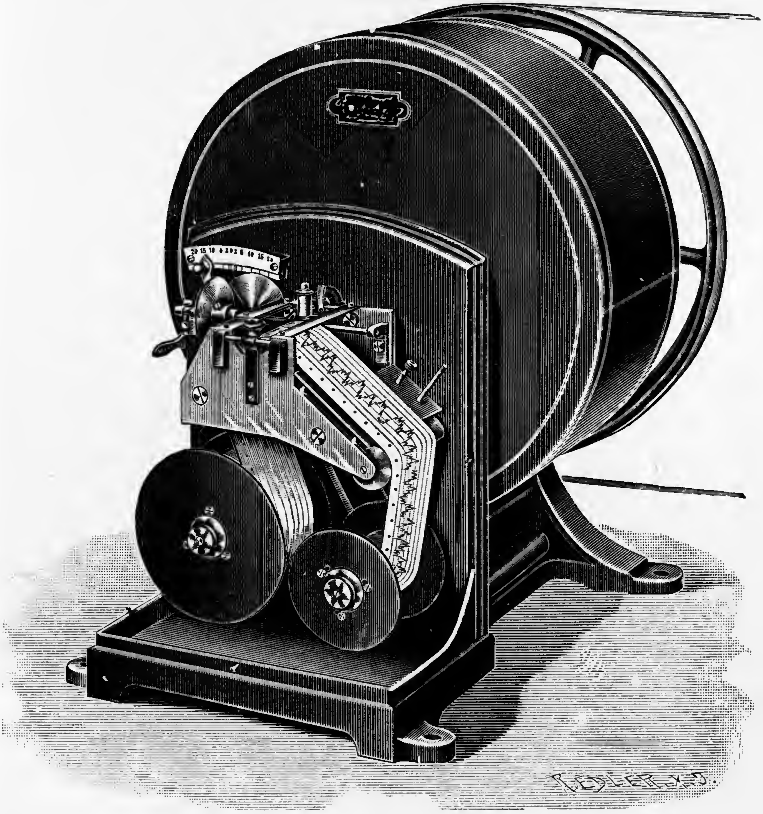

FIG. 46.

fluctuations in the revolutions of a shaft. A pair of weights, not shown in the figure, are revolved about the shaft of the instrument and tend to fly out against the force of restraining springs. Levers connect the weights with a pen under which the tape shown in the figure is caused to move by clockwork. The paper is perforated at one edge to suit the spacing of the teeth on a wheel so that its movement is a correct function of the time. Lines on the paper are drawn to represent variations in speed measured in per cent of the standard.

This instrument makes it possible to investigate irregularities in speed of motors and machines, and in the case of reciprocating engines permits the measurement of irregularities in speed during a single revolution, thus enabling us to investigate directly the effect of the reciprocating parts.

The same instrument may be used for a wide variation in speed by employing a set of changeable cone pulleys.

CHAPTER IV.

MEASUREMENT OF THE QUALITY OF STEAM.

The following terms in thermodynamics are explained in other text-books, but as their meaning must be clearly understood in connection with the study of the calorimetry of steam they will be briefly reviewed here:

Heat as a term employed in thermodynamics must be understood as that form of energy which when applied produces the sensation commonly known as *heat.*

Quantity of Heat.—Heat and work being mutually convertible, the quantity of heat that passes to or from a body is capable of definite measurement and is directly proportionate to the amount of work done in causing such heat to pass.

Temperature may be defined as *heat pressure* or *heat intensity.* It is a measure of that quality which when two bodies are in contact, causes heat to flow from the one of higher to the one of lower temperature. In steam engineering research work in the United States, temperatures are usually measured on the Fahrenheit scale, in which at the atmospheric pressure the temperature of melting ice is reckoned at 32° and the temperature of boiling water at 212°.

Absolute Temperature is the temperature measured from the absolute zero. This has been deduced from the known law governing the relation between pressures, temperatures, and volumes, which is $PV=c(t+k)$, where P stands for pressure, V for volume, t for temperature as measured by the thermometer, and c and k are constants. For the Fahrenheit scale the value of k for all gases has been found to be 461° or 493° below the freezing point of water. T, the absolute temperature, then equals $t+461$, and $PV=cT$.

Entropy of a fluid at any temperature is that quality by which the relation between temperature and quantity of heat is measured. It is best understood by study of the temperature-entropy diagram. (See page 102.)

Boiling Point is the temperature at which evaporation takes place and depends chiefly on the pressure. It is raised slightly by the addition of foreign matter to the water, in solution.

Thermal Unit.—A British Thermal Unit (abbreviated B. T. U.) is the quantity of heat required to raise one pound of water from 62° to 63° Fah. This is the unit adopted by Professor Peabody in constructing his tables, on account of the ease with which its value may be verified. The standard is usually defined as the quantity required to raise water through 1° from its freezing point. It has not been practicable to demonstrate this value experimentally.

Specific Heat of a substance is the number of B. T. U. required to raise a pound of the substance 1° Fah. The specific heat of water is not quite constant at varying temperatures. Its value at 32° is 1.0072, decreasing to a minimum value of 0.9948 at about 77°, and again increasing gradually to 1.046 at 395°. At 60° and at 104° its value is unity. The specific heat of saturated steam is 0.478. This value is also commonly used for the specific heat of superheated steam, but the true value of the specific heat of superheated steam varies slightly with the temperature and pressure.

Sensible Heat at any temperature or pressure is the number of B. T. U. required to raise one pound of water from the freezing point to the boiling point. It is nearly but not quite equal to $t-32$, where t is the Fahrenheit temperature at which evaporation takes place. The *sensible heat* will be denoted by S.

Latent Heat is the number of B. T. U. required to convert one pound of water at any temperature and pressure into steam at the same pressure and temperature. It will be denoted by L.

Total Heat is the sum of the *sensible heat* and the *latent heat* and will be denoted by H.

Joule's Equivalent.—One B. T. U. has been found by experiment to be equivalent to 778 foot pounds of mechanical work, which is known as *Joule's Equivalent.*

Saturated Steam.—When water at any pressure has been heated to the boiling point corresponding to that pressure and converted wholly into steam without further addition of heat it is said to be *saturated.*

Wet Steam is steam containing a certain amount of moisture suspended in it.

Superheated Steam is steam to which heat has been added after reaching the point of saturation.

Quality of Steam.—In practice steam is seldom produced in the perfectly dry saturated condition, but contains a certain amount of moisture in the form of mist, which is suspended in it and carried along with it. It is necessary to determine the amount of this moisture during any steam experiments, though its complement, the *quality* of the steam is usually spoken of. By *quality* we mean that fraction of the whole that is pure, dry, saturated steam. It is usually denoted by x, and the fraction of the whole that is moisture or hot water merely, is $(1-x)$. The percentage of moisture is

$$100(1-x).$$

Steam Calorimeters.

The Steam Calorimeter is an instrument for determining the amount of moisture in steam and from that the quality. There are three general classes in common use, as follows:

(1) Superheating Calorimeters.
(2) Separating Calorimeters.
(3) Condensing Calorimeters.

Fig. 47 shows Prof. Carpenter's Throttling Calorimeter, which belongs to the first of these types. It consists of a small vessel A, to which steam is supplied through a stop or throttle valve and a tapering or converging orifice B, and contains in its center a very deep cup, into which a thermometer can be inserted for obtaining the temperature of the steam in the calorimeter. A cock C connects with a mercury-filled manometer for measuring the pressure of steam in the calorimeter. The exhaust steam is discharged from the lower part of the calorimeter and may be permitted to escape freely.

The principle of operation follows from the superheating of steam when it is allowed to expand freely without doing work. The whole amount of heat contained in the steam must remain constant, but the *total heat of vaporization* being greater at a higher than at a lower pressure, the difference goes to superheat the steam of lower pressure.

Let p_1 = boiler pressure, absolute.
p_2 = pressure in calorimeter, absolute.
t_c = temperature in calorimeter.
L_1 and S_1 = latent heat and sensible heat corresponding to p_1.
H_2 and t_2 = total heat and temperature corresponding to p_2.
s = specific heat of steam.
x = quality of steam required.

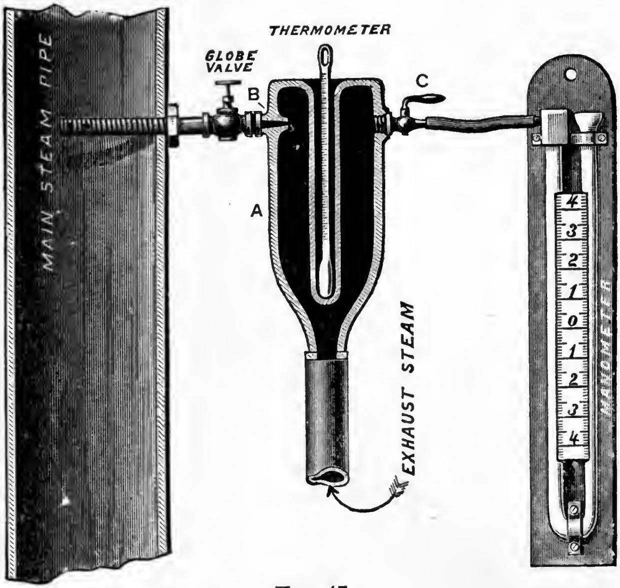

FIG. 47.

Then the heat in a pound of steam flowing to the orifice will be

$$xL_1+S_1$$

and the heat in a pound of steam in the calorimeter after passing through the orifice will be

$$H_2+s(t_c-t_2).$$

Assuming that no heat is lost or converted into work these two expressions must be equal, from which

$$x=\frac{H_2+s(t_c-t_2)-S_1}{L_1}. \qquad (1)$$

Graphical Solution for Throttling Calorimeter Determinations.—In the practical use of this instrument it is customary to exhaust at atmospheric pressure, so that the normal temperature in the calorimeter is the boiling point at atmospheric pressure. H_2 then becomes 1147, from steam tables, and t_2 becomes 212. Between the temperatures at which the instrument will be ordinarily used it will be found that the values of S_1 and L_1 can be represented by

$S_1=1.017t_1-32$, and
$L_1=1115-0.705t_1$.

The expression for x as found above, then becomes by substitution

$$x=\frac{1077+0.48t_c-1.017t_1}{1115-0.705t_1}. \qquad (2)$$

This equation may be written

$$t_c=\frac{1115x-1077+t_1(1.017-0.705x)}{0.48}. \qquad (3)$$

If x be given a constant value, this equation represents a straight line of which t_1 and t_c are the coordinates. A diagram is constructed by giving x a series of values approaching unity and drawing the series of lines that will be represented. This is shown in Fig. 48, in which t_1 is measured on the vertical and t_c on the horizontal axis. x may be thus found graphically, knowing the values of t_1 and t_c.

In order to find t_1 it is necessary to consult a steam table and pick out the value corresponding to p_1. To avoid this necessity a diagram is constructed, as shown in Fig. 49, where the ordinates represent initial absolute pressures instead of temperatures. Similar lines are drawn to represent x and the diagram is used in a manner similar to the preceding, but it will be noted that, since the pressure does not vary directly with the temperature, the values of x are now represented by a series of curves, instead of straight lines.

Calibration Method.—The throttling calorimeter is frequently used to determine the quality of steam at a constant pressure, as in boiler tests. In such cases if the discharge valve be closed so that the only outlet is through the calorimeter, dry saturated steam will flow into it. Let $T=$the corresponding temperature in the calorimeter. Equation (1) then becomes

$$1=\frac{H_2+s(T-t_2)-S_1}{L_1}.$$

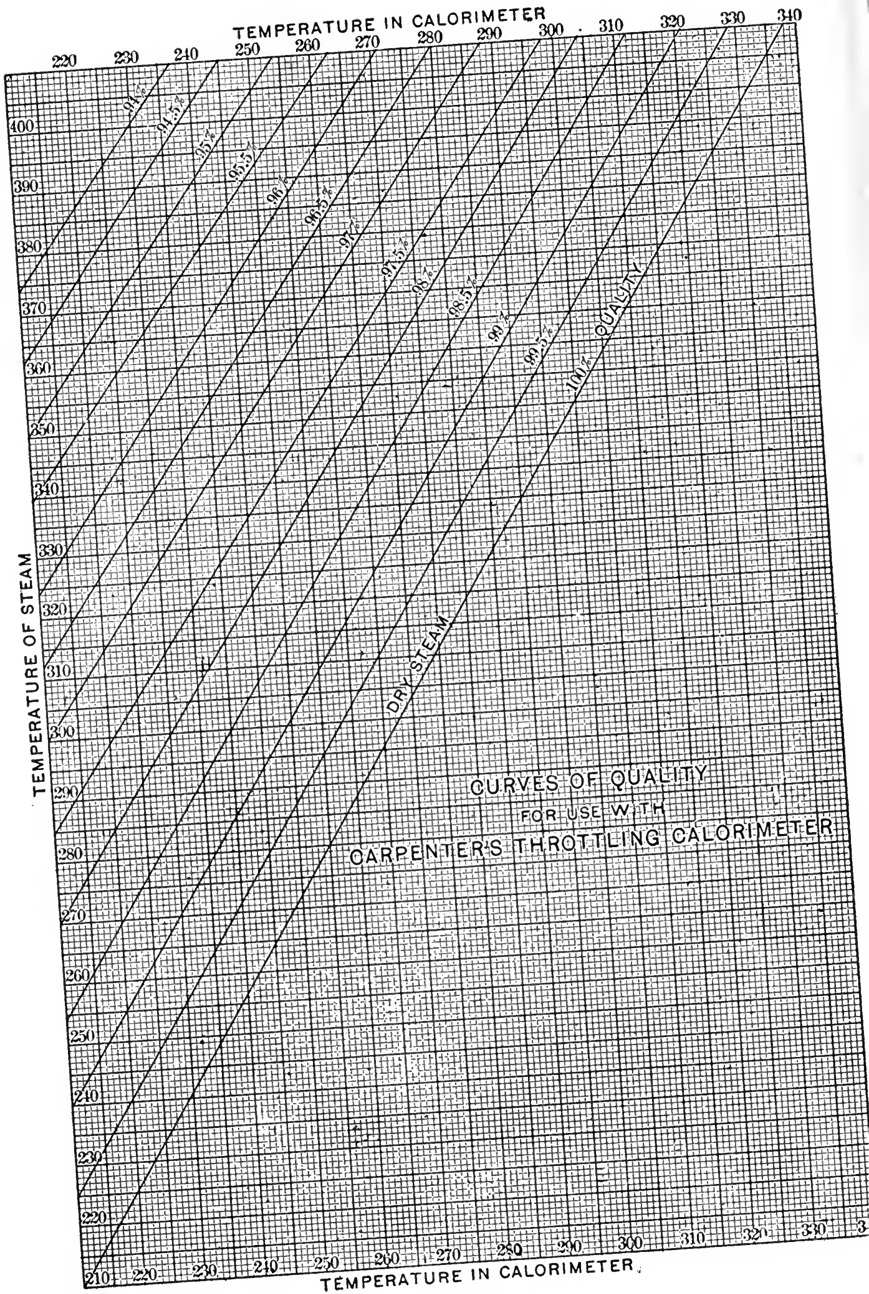
TEMPERATURE IN CALORIMETER
220
230
240
250
260
270
280
290
300
310
320
330
340
TEMPERATURE OF STEAM
400
390
380
370
360
350
340
330
320
310
300
290
280
270
260
250
240
230
220
210
94%
94.5%
95%
95.5%
96%
96.5%
97%
97.5%
98%
98.5%
99%
99.5%
100%
QUALITY
DRY STEAM
CURVES OF QUALITY
FOR USE WITH
CARPENTER'S THROTTLING CALORIMETER
210
220
230
240
250
260
270
280
290
300
310
320
330
3
TEMPERATURE IN CALORIMETER

Fig. 48.

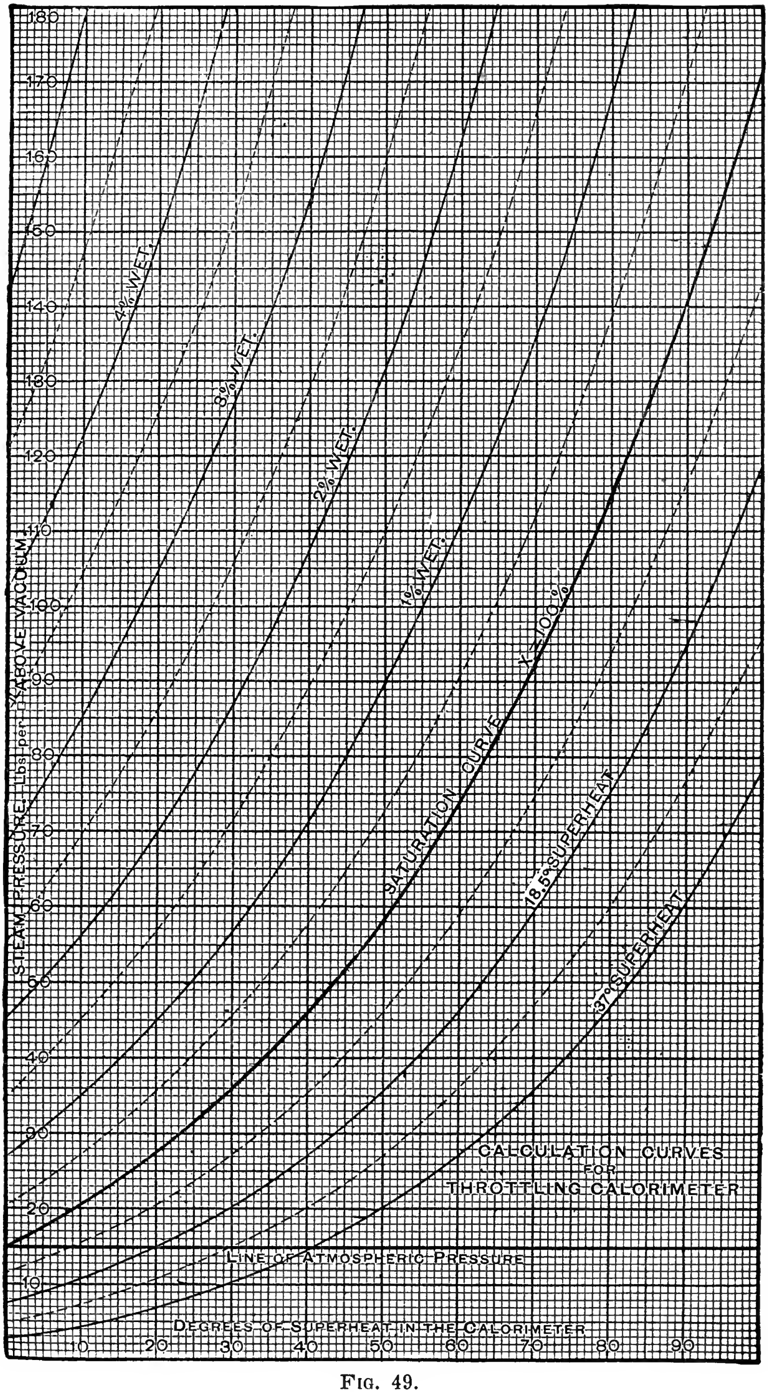
180
170
160
150
140
130
120
110
100
90
80
70
60
50
40
30
20
10
STEAM PRESSURE. Lbs. per □" ABOVE VACUUM.
4% WET.
8% WET.
2% WET.
1% WET.
SATURATION CURVE X=100%
18.5° SUPERHEAT
37° SUPERHEAT
CALCULATION CURVES
FOR
THROTTLING CALORIMETER
LINE OF ATMOSPHERIC PRESSURE
DEGREES OF SUPERHEAT IN THE CALORIMETER
10
20
30
40
50
60
70
80
90

Fig. 49.

During the test, if t be the observed temperature in the calorimeter, the boiler pressure being the same as before, we will have

$$x = \frac{H_2 + s(t - t_2) - S_1}{L_1}$$

and the percentage of moisture =

$$1 - x = \frac{s(T - t)}{L_1} = \frac{0.48(T - t)}{L_1}. \qquad (4)$$

Log of Test.—

________________________, 191__

TEST WITH THROTTLING CALORIMETER.

Steam from ________________________

Duration of	Barometer.	Boiler Pressure		Calorimeter Pressure		Calorimeter Temp.	Quality Steam
		Gage	Abs.	Gage	Abs.		

Limitations of the Throttling Calorimeter.—If the percentage of moisture is so great that the steam, expanding into the calorimeter, does not become completely dried, the instrument is of no value. The theoretical limit is found for any initial temperature t_1 by putting t_c equal to t_2 in equations (1) and (2), pages 88 and 89. The practical limit is somewhat lower and varies from 2.3% of moisture at 50 pounds boiler pressure to about 7% at 300 pounds.

For a small percentage of moisture, the throttling calorimeter is one of the handiest and most accurate forms of apparatus.

Professor Thomas' Superheating Calorimeter.—This instrument is the invention of Prof. Carl C. Thomas, of the University of Wisconsin. The general arrangement is shown in Fig. 50, with a section through the calorimeter proper in Fig. 51.

Steam is admitted and after passing through the instrument, passes out to a condenser or to the atmosphere. The admission valve, if there is one, is opened wide to permit free access of steam. A thermometer measures the temperature of the steam in the instrument.

As steam is passed through the instrument it is dried and then superheated by an electric heater placed within its walls. The condition of dryness is indicated by an immediate rise of temperature, as shown by the thermometer, if more than the requisite amount of electrical energy is supplied.

For convenience let E_1 represent the number of watts necessary to exactly dry the quantity of steam that passes through the instrument. After noting E_1 the steam is superheated by additional watts E_2 up to a temperature t, above saturation, of 20, 30, 100, or some other convenient number of degrees of superheat. This operation is for the purpose of determining the rate of flow or the weight of dry steam W_1 passing through the instrument when at the saturation point. The weight W_2 passing through after superheating will be less than W_1 by a percentage which may, for a given pressure, be represented by a constant C; the specific gravity of superheated steam being smaller than that of saturated steam at same pressure.

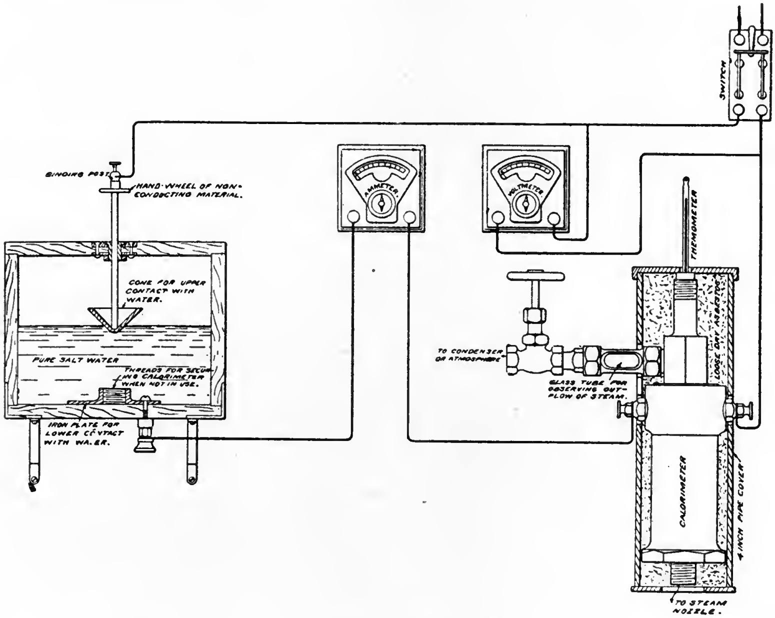

Fig. 50.

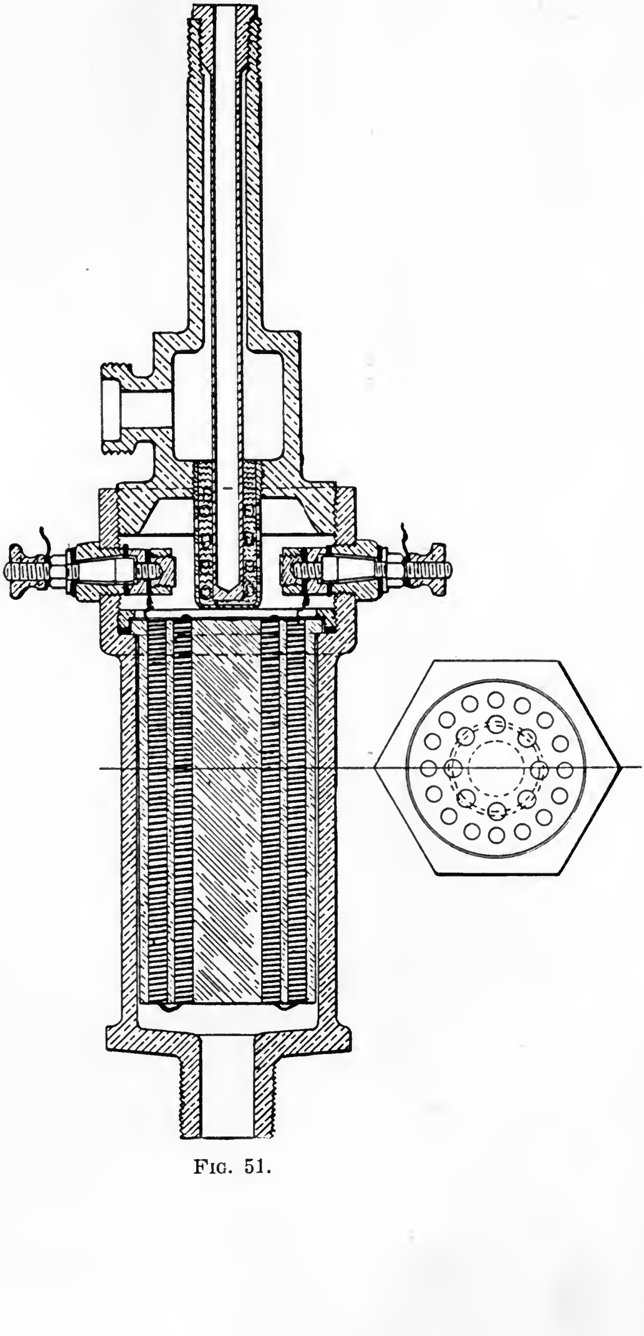

FIG. 51.

This constant has been determined by practical tests with the instrument, as has also the number of watts S necessary to superheat a pound of steam to $t°$ at different pressures. The value S may be used instead of the specific heat of steam, and has the advantage of allowing for radiation losses. The quality of steam may be obtained, either by the use of curves supplied with the instrument, or by calculation, using the specific heat of steam at varying pressures. By using the curves, possible errors due to uncertainty as to the value of the specific heat are eliminated.

Let W_1=weight of dry steam passing per hour.

Then, since one watt=.0009477 B. T. U. per sec., or 3,412 B. T. U. per hour, we have E_1 watts$=E_1 \times 3.412$ B. T. U's per hour=the energy required to evaporate the water in W_1 pounds of wet steam.

Let $H_x = \dfrac{3.412E_1}{W_1}$ =the energy thus required, per pound of steam, in B. T. U's.

Let $W_2 = CW_1$=weight of superheated steam passing per hour, then E_2 watts$=CW_1S$, where S=the number of watts required to superheat one pound of steam through $t°$, and $W_1 = \dfrac{E_2}{CS}$. Substituting this value of W_1 in the above expression for H_x, we have

$$H_x = \frac{3.412E_1 \times CS}{E_2}.$$

Since C and S are constants for any given pressure and degree of superheat, $3.412CS$ may be written as a constant, K, and values of this constant are given for varying pressures and degrees of superheat, by a set of curves plotted from experimentally obtained data. See Fig. 52.

The expression for H_x then becomes

$$H_x = K \times \frac{E_1}{E_2}.$$

If H_v represents the heat of vaporization of dry steam, obtained from the steam tables for the pressure indicated by the original temperature in the calorimeter, the quality of steam passing through the calorimeter is

$$x = \frac{H_v - H_x}{H_v}.$$

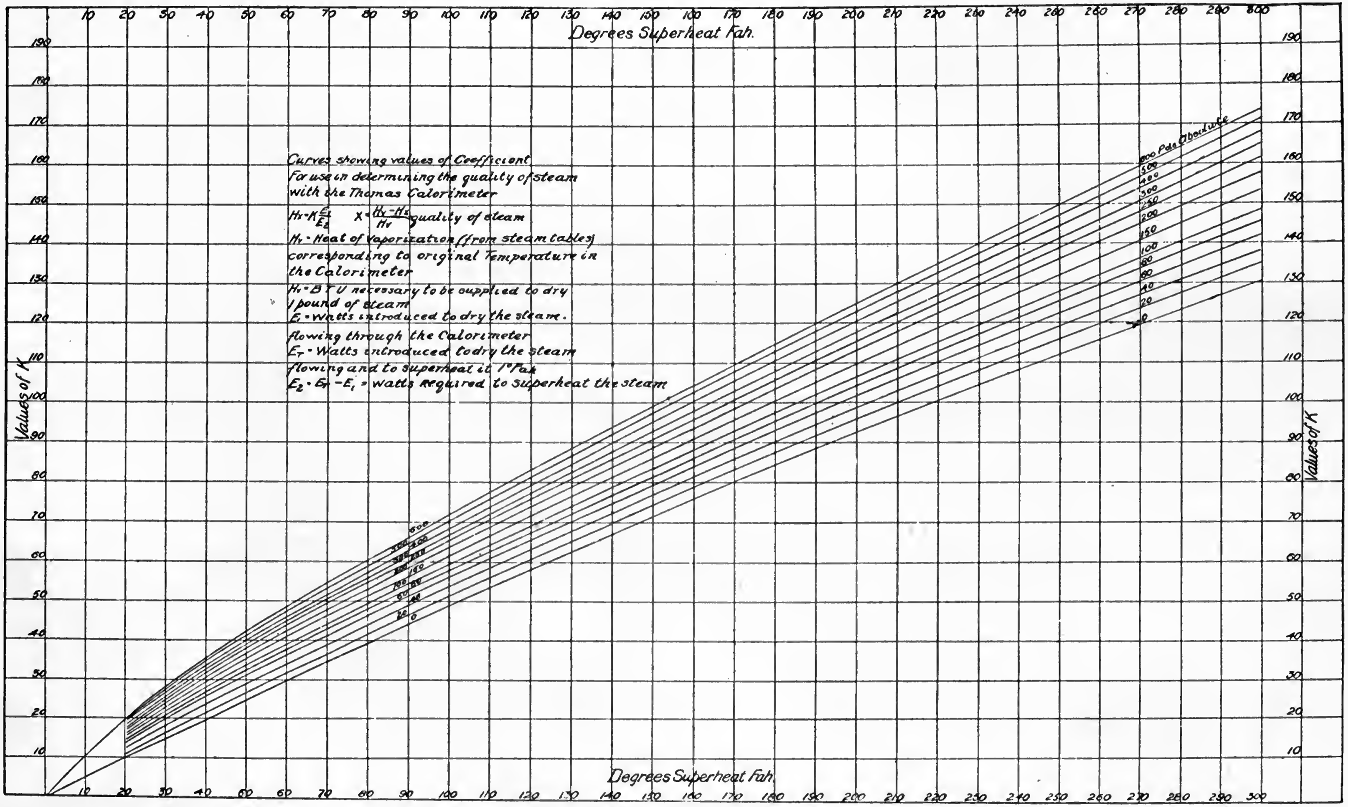
Degrees Superheat Fah.
10
20
30
40
50
60
70
80
90
100
110
120
130
140
150
160
170
180
190
200
210
220
230
240
250
260
270
280
290
300
Values of K
10
20
30
40
50
60
70
80
90
100
110
120
130
140
150
160
170
180
190
Curves showing values of Coefficient
For use in determining the quality of steam
with the Thomas Calorimeter
$H_r = K\frac{E_1}{E_2}$ $X = \frac{H_v - H_r}{H_v}$ = quality of steam
H_v - Heat of Vaporization (from steam tables)
corresponding to original Temperature in
the Calorimeter
H_r = B T U necessary to be supplied to dry
1 pound of steam
E_1 = Watts introduced to dry the steam.
flowing through the Calorimeter
E_T - Watts introduced to dry the steam
flowing and to superheat it 1° Fah
$E_2 = E_T - E_1$ = watts Required to superheat the steam
600 Pds Absolute
500
400
300
250
200
150
100
80
60
40
20
0
600
500
400
300
250
200
150
100
80
60
40
20
0

FIG. 52.

It is to be noted that the constant K is independent of the weight of steam flowing through the calorimeter during superheating, although for clearness consideration of this weight has been included in the above explanation.

Operation of the Apparatus.—The calorimeter is attached in a vertical position to the source of steam supply. This may be a sampling tube of ordinary form, extending into a steam pipe. A special form of sampling tube is supplied with the instrument, designed for use in collecting samples of steam in the various passages of a Parsons steam turbine. The same tube may be used for collecting samples of steam from different portions of any steam passage without disconnecting the instrument.

The box, shown in Fig. 51, is used as a water rheostat for regulating the amount of electrical energy supplied to the heating coils. It is filled about half full of fresh water, to which one or two cupsfull of common salt are added. The inverted cone is lowered or raised, to bring more or less of its surface in contact with the water, thus varying the resistance and permitting a perfect adjustment of the amount of electrical energy supplied. A voltmeter and ammeter of ordinary form are fitted between resistance box and instrument. Current is supplied from the lighting circuit at about 110 volts. About ten amperes will be found sufficient for experiments.

Sufficient electrical energy is at first supplied not only to dry the steam, but to superheat it to some convenient temperature. Let the watts introduced be denoted by E_t. Raise the cone of rheostat slowly until the thermometer indicates that superheating no longer is taking place. The steam will then be at the point of saturation. Let E_1 denote the energy then being supplied, which will be the amount required to just dry the steam, and E_2, the watts required to superheat through $t° = E_t - E_1$.

From the curves, Fig. 52, select the value of the coefficient K, corresponding to the degree to which the steam was superheated, and to the original pressure in the calorimeter, then calculate the value of H_x from the equation $H_x = K \times \frac{E}{E_2}$.

Find the quality of the steam from the second set of curves, Fig. 53, representing the equation $x = \frac{H_v - H_x}{H_v}$. The quality may of course be calculated from the equation if desired.

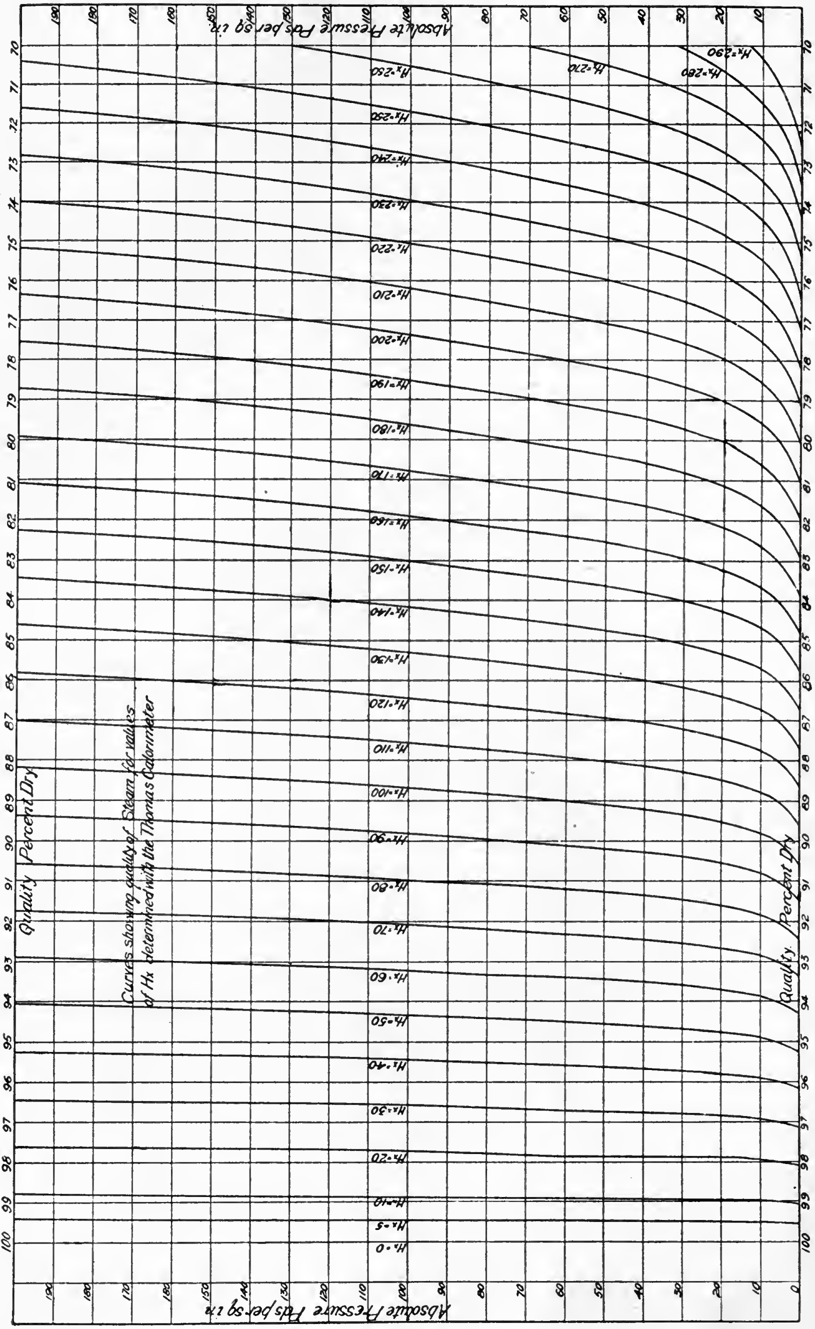
Curves showing quality of Steam for values of Hx determined with the Thomas Calorimeter
Absolute Pressure Lbs per sq in.
Quality Percent Dry
Hx=0
Hx=5
Hx=10
Hx=20
Hx=30
Hx=40
Hx=50
Hx=60
Hx=70
Hx=80
Hx=90
Hx=100
Hx=110
Hx=120
Hx=130
Hx=140
Hx=150
Hx=160
Hx=170
Hx=180
Hx=190
Hx=200
Hx=210
Hx=220
Hx=230
Hx=240
Hx=250
Hx=250
Hx=270
Hx=280
Hx=290
0
10
20
30
40
50
60
70
80
90
100
110
120
130
140
150
160
170
180
190
70
71
72
73
74
75
76
77
78
79
80
81
82
83
84
85
86
87
88
89
90
91
92
93
94
95
96
97
98
99
100

FIG. 53.

Carpenter's Improved Separating Calorimeter.—This instrument, shown in Fig. 54, contains two vessels, one inside the other. The outer vessel surrounds the inner, leaving a space which serves as a steam jacket. The inner vessel is provided with a glass water gage 10 and scale 12.

The steam under test is admitted through the pipe 6. Striking the bottom of a perforated cup 14, it is deflected nearly 180 degrees. The water is thrown off and passes through the perforations into the inner vessel 3, where the amount is indicated by the graduated scale 12 on gage glass. The steam passes across the top of perforated cup and into outside chamber, from which it is discharged through a small orifice 8, of known area, in the bottom part.

The orifice 8 is so small in comparison with any section of the steam pipe or throttle valve that there is no sensible reduction in pressure by passing through the calorimeter. The pressure in outer chamber being the same as in the interior, it has the same temperature and consequently there is no loss by radiation from the interior surface except what takes place from the exposed surface of the gage glass.

It has been demonstrated that the flow of steam through a small orifice is proportional to the absolute steam pressure, until the pressure against which the flow takes place equals or exceeds 0.6 of that of the vessel under pressure. A special form of steam gage is placed on the outside chamber, the inner circle of which shows the gage pressure and the outer circle shows the number of pounds of steam that will escape through the orifice in 10 minutes of time.

The graduations on the scale 12 show the weight of water in pounds and hundredths that is contained in the inner vessel. The instrument is operated at a constant pressure for 10 minutes and w, the weight of water collected, is read off; also W, the weight of dry steam that escapes through the orifice, is read off on the steam gage. Then

$$x = \frac{W}{W+w}$$

and

$$1-x = \frac{w}{W+w}.$$

An earlier form of this calorimeter is similar to the foregoing, except that the escaping dry steam is condensed and weighed.

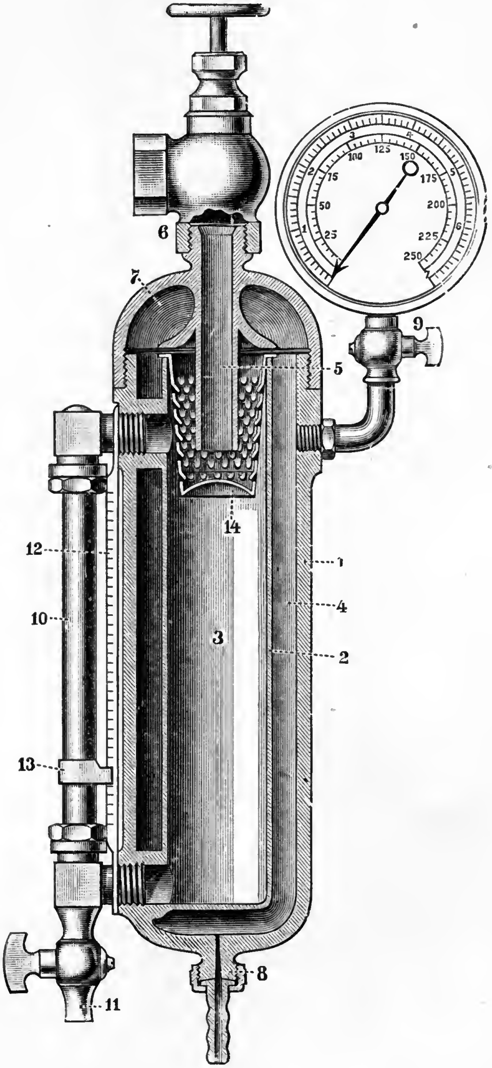
6
7
5
9
14
12
1
4
10
3
2
13
8
11
1
2
3
4
5
6
7
25
50
75
100
125
150
175
200
225
250

FIG. 54.

The separating calorimeter is accurate and applicable in all cases where the steam contains moisture. It is not applicable in cases where the steam is superheated.

The Barrel Calorimeter.—This is of the condensing kind and is improvised for steam tests in cases where other more accurate apparatus cannot be obtained.

A heavy barrel, such as an oil barrel, of about 50 gallons' capacity, is employed. This is placed on a platform scale for weighing. A hose is provided for filling it with cold fresh water and a cock in the bottom serves for draining this off. A pipe connection is led directly over the barrel to bring the steam that is to be tested. This ends in a short piece of rubber hose leading straight down into and nearly to the bottom of the barrel. A stop valve is placed just over the barrel, with which to turn on or shut off the steam.

The barrel is weighed empty, then filled about three-fourths full of cold water, again weighed, and the temperature of the water taken. The hose is removed and steam is blown through to heat it. Steam is then shut off, and the hose inserted in the water, after which steam is blown in and the water carefully stirred until the temperature rises to about 110° Fah. The weight is again taken to determine the weight of steam blown in. The pressure of steam is noted from the gage and the corresponding values of S and L taken from the steam tables. Then if W be the weight in pounds of cold water in barrel at temperature t_1, and w pounds of wet steam of quality x be blown in, bringing the weight of water up to $W+w$ at temperature t_2, and if no heat is lost during the operation, we will have, reckoning from the freezing point,

Heat contained in cold water $=W(t_1-32)$.

Heat added in w pounds of wet steam $=w(xL+S)$, and

Heat contained in water after blowing in steam

$$=(W+w)(t_2-32).$$

From which

$$x=\frac{1}{L}\left(\frac{W}{w}(t_2-t_1)+t_2-32-S\right).$$

This method will not give the exact value of x, since it is impossible to prevent losses by radiation, and for accuracy a correction must be applied for the heat equivalent of the barrel. In practice this is difficult of determination and the usual method is to neglect it, but to allow for radiation approximately by first filling the barrel and heating the water to about 20° Fah., above the final temperature t_2 of the experiment. This water is drained off and the barrel immediately refilled for the purpose of the experiment.

Care in Selecting Sample of Steam.—With any calorimeter, care should be taken in so placing it that a fair sample of the steam is taken. Experiments have proven that steam taken from the center of a large pipe contains less moisture than if taken near the walls. For throttling calorimeters, the American Society of Mechanical Engineers recommend that the calorimeter pipe be $\frac{1}{2}$ inch in size, that it extend into the steam pipe to within $\frac{1}{2}$ inch of the opposite wall, that the inner end be plugged, and that it be provided with not less than twenty $\frac{1}{8}$-inch holes, distributed along and around its length, no hole being closer than $\frac{1}{2}$ inch to the inner end. To obtain satisfactory results, the same care should be exercised in sampling the steam for test in any calorimeter.

The Temperature-Entropy Diagram.

The Temperature-Entropy Diagram is used by engineers for investigating the work done and the losses that occur in heat engines, for which purpose it is of great practical value. In the indicator diagram we have work or energy shown by an area, ordinates representing force, and abscissæ representing distance. In the temperature-entropy diagram, an area represents *heat,* an ordinate represents *absolute temperature,* and abscissæ represent *entropy.*

If a body takes in, or rejects, a quantity of heat $dQ,$ at the absolute temperature $T,$ the entropy of the body is increased, or decreased, such increase or decrease of entropy being $\frac{dQ}{T}$. Let entropy be represented by the symbol ϕ, then the *change of entropy* consequent upon the addition, or subtraction, of the quantity of heat $dQ,$ at the absolute temperature $T,$ is expressed by

$$d\phi = \frac{dQ}{T}, \qquad (1)$$

or with proper limits,

$$\phi = \frac{Q}{T}. \qquad (2)$$

If we now lay off the values of ϕ as abscissæ and the absolute temperatures as ordinates in a diagram, we can plot the condition of a body as defined by its entropy and absolute temperature. In Fig. 55, suppose p a point so defined, being the increase of entropy due to the addition of a quantity of heat Q, and T the absolute temperature at which it was added. The area $ABCD = \phi \times T$, but this, from equation (2) is equal to Q, the heat added, and brings us at once to the principle of the temperature-entropy diagram.

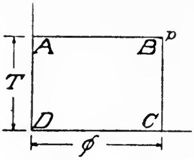

FIG. 55.

In dealing with entropy, as in dealing with total heat, an arbitrary point is chosen, entropy being reckoned from that point as a zero, and the entropy of the substance for every other state will have a value which is perfectly definite and may be calculated. In reckoning entropy, the condition of water at 32° Fah. is taken as the zero.

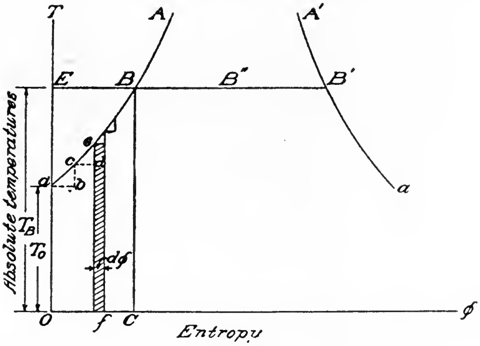

FIG. 56.

The Diagram for Water.—In Fig. 56, let OT and $O\phi$ be the axes for the measurement of absolute temperatures and entropy. Let T_0 be the absolute temperature corresponding to 32° Fah., then $\phi = O$ at this point, as we have assumed the condition of water at 32° Fah. to be the zero of entropy.

Now take one pound of water at 32° and add a small quantity of heat to it. Then, with reference to the diagram, there are two distinct changes; first, the temperature is raised, and second, the entropy is increased. In Fig. 56 the increase in entropy is represented by *ab,* and the rise in temperature by *bc,* so that the new condition of the water on the diagram is represented by the point *c.* Now let a little more heat be added and the temperature and entropy still further increased, as by *cd* and *de,* so that the new condition is now represented by the point *e.* We can at once see that when the additions of heat are infinitely small and continuous, *i. e.,* when heat is added proportional to the rise in temperature, the points representing the condition of the water at each instant will, when plotted on the diagram, lie on a curve *aA.*

Let B be a point on the curve whose absolute temperature is T_B. Then the area $OaBC$ represents the quantity of heat supplied between the limits of temperature T_0 and T_B, and if a is the heat supplied for each degree of rise in temperature, *i. e.,* the mean specific heat of water, then the area $OaBC = a\int_{T_0}^{T_B} dT$. The area of any element, as *ef,* is $Td\phi$, and the whole area $OaBC$ is equal also to $\int_0^{\phi_B} Td\phi$, and we have

$$\int_0^{\phi_B} Td\phi = a\int_{T_0}^{T_B} dT, \text{ or}$$

$$\phi\Big]_0^{\phi_B} = a\int_{T_0}^{T_B} \frac{dT}{T} = a \log_\epsilon T\Big]_{T_0}^{T_B}$$

or finally

$$\phi_B = a \log_\epsilon \frac{T_B}{T}. \tag{3}$$

Since the point B may be any point on the curve, and the temperature T, the temperature at any such point, we may drop the subscript $_B$ and write for the entropy of water at any temperature

$$\phi_w = a \log_\epsilon \frac{T}{T_0} = a \log_\epsilon \frac{T}{493}, \tag{4}$$

where T is the absolute temperature of the water, and T_0 is the absolute temperature of the point taken as the zero of entropy, in this case the absolute temperature corresponding to 32° Fah.

The Entropy of Steam.—Again referring to Fig. 56, suppose that at B the pound of water is completely evaporated, and dry steam formed having the same temperature as the water from which it was formed. Remembering that if heat is added at constant temperature, the increase in entropy is proportional to the quantity of heat added, we see that the

$$\text{Increase of entropy from } B = \frac{\text{Heat added}}{\text{Absolute temp. at which added}} . \qquad (5)$$

The change is an isothermal one as the temperature has not changed and the increase of entropy BB' is laid off from B on the horizontal line corresponding to the absolute temperature of B. The distance of B' from the axis of OT measures the value of the entropy of one pound of dry steam at the absolute temperature T_B. Referring to equation (5) the heat added is the latent heat of steam at the absolute temperature T_B, and calling this L_B, we have

$$BB' = \frac{L_B}{T_B} . \qquad (6)$$

Remembering that B is any point, we have, dropping the subscripts, for dry steam at any absolute temperature T,

$$\phi_s = a \log \frac{T}{493} + \frac{L}{T} \qquad (7)$$

where L is the latent heat corresponding to that temperature and a is the mean specific heat of water at that temperature. Plotting the curve as given by equation (7) we get $A'a'$, Fig. 56. Comparing equations (7) and (4), we see that the entropy curve for dry steam is formed by laying off, from each point on the curve for water, the value of $\frac{L}{T}$, and since the latent heat of steam decreases as the temperature rises, the value of $\frac{L}{T}$ will decrease as we ascend the scale of temperature and the curves will approach each other.

Mixture of Steam and Water.—Again referring to the condition of the water at the point B, Fig. 56, suppose that only a fraction, x, is evaporated. We would have a mixture of steam and water, and the heat added at the point B would be xL, and the increase of entropy would be BB'', less than BB'. It will be readily seen that the entropy in this case is given by the equation

$$\phi = a \log_\epsilon \frac{T}{493} + \frac{xL}{T} . \qquad (8)$$

It is evident that this is the general equation, for if we make $x=0$, we get equation (4) and if we make $x=1$, we get equation (7). Any mixture between the limits of all water and all steam can be represented by (8) by giving the proper value to x, which is the *dryness fraction,* or *quality of the steam.*

Isothermal Lines on Diagram.—Isothermal changes are made at constant temperature, and are plotted on the diagram by straight lines parallel to the line *O,* from which absolute temperatures are measured. Such a change occurs when steam at boiler pressure is being admitted to the cylinder; also, when the exhaust is being pushed out at the pressure corresponding to the vacuum in condenser.

Adiabatic Lines on Diagram.—When no heat is received or given out during an operation, it is called an adiabatic operation. Expansion and compression occurring in a cylinder without gain or loss of heat are adiabatic and are represented on the diagram by vertical lines. Drawing a line on the diagram to represent such an expansion, it will be noted that the temperature falls and some of the steam is condensed, but the total quantity of heat contained has remained constant.

If cylinder walls could be constructed of non-conducting material, expansion and compression would in practice be adiabatic. But during expansion, as the temperature falls, heat is received from the cylinder walls and during compression heat is given up to them.

Temperature-Entropy Diagram for an Ideal Engine.—In Fig. 57 $A''B''C''D$ shows the cycle of operations in an ideal engine. The cycle begins at A'', the position of the point A'' corresponding to the temperature and entropy of a pound of water just ready to form steam. The isothermal $A''B''$ is the admission line. As the steam is generated, it is admitted to the engine and follows the piston to the point of cut-off, represented by B''. It then expands without gain or loss of heat, in other words adiabatically, to the end of the stroke, where the pressure and corresponding temperature has been reduced to that of the condenser. This expansion line is represented by $B''C''$. On the return stroke the steam is swept completely out of the cylinder into the condenser. This operation is represented by the isothermal $C''D$. The point D then represents the temperature and entropy of a pound of water in the condenser. This water is returned to the boiler and there receives heat, bringing it back to the condition at the beginning of the cycle. This part of the operation is represented by DA''.

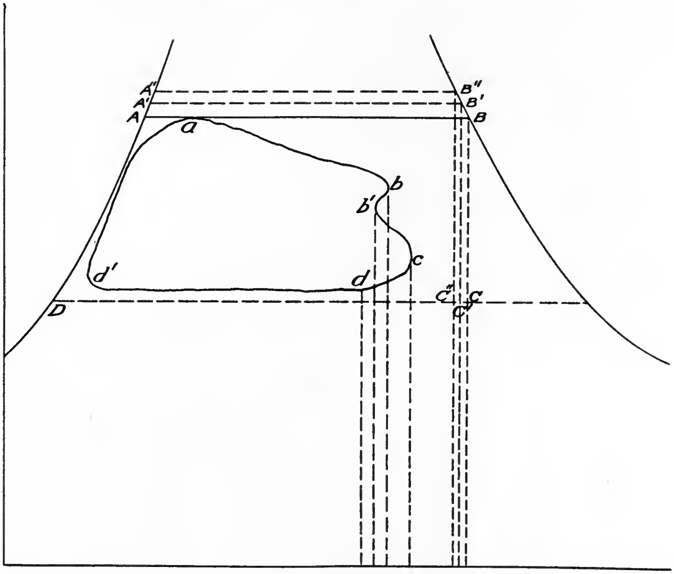

FIG. 57.

Temperature-Entropy Diagram for a Real Engine.—In the actual engine the conditions are somewhat different. There is a slight loss of pressure and temperature between boiler and throttle valve, and a further loss between throttle and engine. The conditions at throttle and engine are represented by the lines $A'B'$ and AB, respectively. The cycle of the *ideal* engine should therefore actually begin at A, instead of at A''.

At the beginning of the stroke there is a certain mass of steam contained in the clearance volume of the cylinder, the amount of this depending upon the point of exhaust closure. The cycle then begins with a mixture of this steam and the water that is received from the boiler. For one pound of the mixture, the cycle in the *real* engine will therefore not begin at A, but at a, a point representing the same temperature as A, but greater entropy.

In the *real* engine, the point of cut-off will not fall at *B*, but at *b*, and the real admission line is *ab*. The heat lost by initial condensation is represented by the area between *aB*, *ab*, and the full length of the ordinates through *b* and *B*.

From *b* to *b'* the steam in expanding gives up heat to the cylinder walls, and there is a corresponding loss of entropy. At *b'* the temperature of the steam has fallen to the temperature of the walls and in expanding further to *c*, there is a gain in entropy due to the absorption of heat from this scource. At *c* the exhaust opens and the steam is permitted to expand into the condenser, with falling temperature and partial condensation, the entropy falling to *d*, which represents the condition at the end of the stroke. From *d* to *d'* the steam is being swept into the condenser on the return stroke, this line approaching very closely to an isothermal. The fact that this line does not coincide with *DC* indicates that there are resistances between the engine and condenser, the temperature being slightly higher in the cylinder than in the condenser.

At *d'* the exhaust closes, that portion of the steam received from the boiler at the beginning of the cycle, having been returned to the condenser, and the weight contained in the original clearance volume having been retained in the cylinder. This latter, it will be understood, is in the form of steam, which is then compressed, its temperature rising, and since there is a loss of heat to the walls of the cylinder, there is a slight loss of entropy. That part of the diagram from *d'* to *a* then represents the line for one pound of a mixture of steam and water, consisting of that portion which is returned to the condenser, and thence to the boiler, combined with that portion which remains in the cylinder as steam at the point of exhaust closure. The area between *d'a* and *DA* represents the loss due to clearance.

For further information regarding the practical use of the temperature-entropy diagram, the student is referred to text-books on that subject. It is of particular value in investigating the thermodynamic changes that occur in a steam turbine. By tapping into the various passages in a turbine and determining the temperature and quality of the steam, it is possible to construct the diagram, and from it to obtain all necessary data concerning the economical performance.

In studying the design of reciprocating engines, the diagram is used as a means of analyzing indicator diagrams, in order to discover thermodynamic defects that may exist.

For further study of the subject the student is referred to more extended works treating of it and its application. The following works treating of it and its practical application are in the library of the Head of Department of Marine Engineering and Naval Construction: The Energy Chart, Sankey; The Entropy-Temperature Analysis of Steam Engine Efficiencies, Reeve; The Steam Turbine, Thomas; Experimental Engineering, Pullen; The Steam Engine, Creighton; Steam Tables and Diagrams, Marks and Davis. The last-named volume has diagrams giving the relation between pressures, qualities, total heats, volumes and entropies of wet, saturated and superheated steam. They will be found particularly useful in solving problems involving wet or superheated steam.

CHAPTER V.

MEASUREMENT OF THE RATE OF FLOW OF WATER.

This subject becomes of special importance to the naval engineer in testing the output of pumping machinery, or in the calibration of instruments used in such tests.

Water Meters.—The best known type of water meter is the one in which the water flowing through actuates a train of wheels, thus communicating motion to an index on a dial which registers the volume of water that flows through. Meters of this type are made by numerous manufacturers and are more widely used than any other on account of their convenience. They are fairly accurate when used for indicating the flow of water under ordinary conditions, but they must be carefully calibrated and the proper correction applied to the readings.

The Worthington Water Meter.—This instrument is of the above type. It may be simply described as a reversed duplex pump, in which all the water passing through it is used to impart motion to one or the other of the two pump pistons. The water is distributed to the two pump cylinders by plain slide valves, each of which is operated by the movement of the opposite piston. The pistons are connected up so that each movement registers on the counter, and the reading indicates the volume of water that has passed through, independent of any clock mechanism such as is necessary in other types of meters. The reading is shown on a series of dials, the first indicating tenths up to one cubic foot, the second cubic feet up to ten, the third tens of cubic feet up to one hundred, etc. The largest size meter of this kind registers up to one million cubic feet.

The Worthington Company has recently brought out a second form of meter in which the casing contains a turbine motor, which, while permitting the water to flow through it with but little resistance, imparts the necessary movement to the registering mechanism. The method of reading is similar to that above described.

The Keystone Water Meter, as manufactured by the Pittsburg Meter Company, is shown in Fig. 58. There is a flat disc, *D,* having a ball and socket bearing, *B,* which is adapted to oscillate in a chamber, in which each of the upper and lower faces, *F* and *G,* approximates in shape the frustum of a cone, the extreme confining wall, *W,* having a globular shape. The disc has a single slot, projecting radially from the boss, which embraces a fixed metallic diaphragm, *H,* set within and crosswise on one side of the chamber. The disc is thus prevented from rotating and an axial pin, *P,* moving around the cone surface, *C,* causes the disc at all times to take an inclined position, in contact with the upper and lower cone surfaces of the chamber. As the water passes through, the disc oscillates, dividing the chamber into a succession of sub-compartments, or measuring spaces. The oscillation gives a movement to *P* around *C,* and thus operates the adjoining crank, *K,* and gives motion to the train of wheels and register on plate *L.*

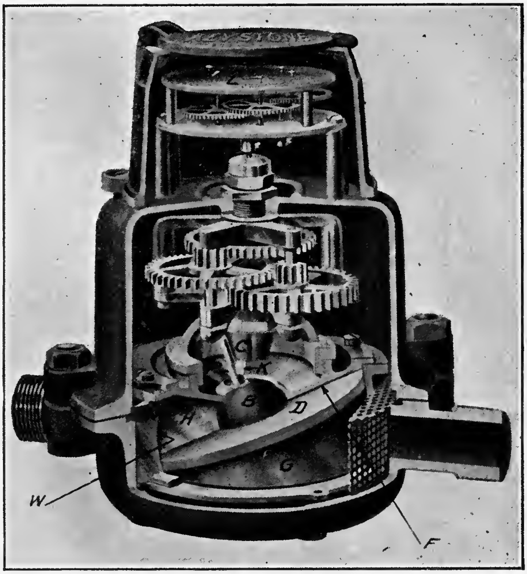

Fig. 58.

To determine the *rate of flow* with either of the meters as above described, it is necessary to take readings and divide the difference by the elapsed time between them.

Meters as regularly constructed do not work well when installed in piping on board ship. This is due to the irregular service and to the effect of hot water in injuring the mechanism or causing it to register incorrectly on account of expansion of certain of the parts. They are generally used for measuring the quantity of water taken on board from outside sources. For this purpose they are very suitable.

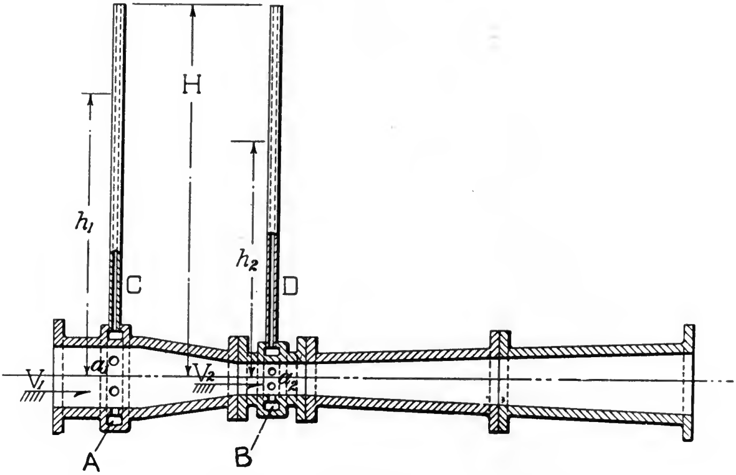

FIG. 59.

In calibrating a meter, the water should be at approximately the same temperature as in the service for which the correction is to be applied.

The Venturi Meter.—This instrument, though of a different type, is, like the preceding, used to determine the volume of water flowing through a pipe. Its theory is based on the discovery made more than a hundred years ago by an Italian philosopher named Venturi, that when water flows through a contraction in a pipe, the pressure is less in the contracted section than in the larger section on either side.

If at any point in a pipe through which water is flowing a small pipe connection is made and the small pipe is carried up vertically, water will rise freely in the small pipe due to the pressure in the large pipe. Suppose the flow stopped and let H = the height to which the water will rise under this condition. Then if h = the height to which the water will rise when it is flowing with velocity V, the relation between H, h, and V is expressed by the formula

$$V^2 = 2g(H - h).$$

Fig. 59 represents a longitudinal section through the Venturi tube. An annular chamber, A, communicates through a number of holes with the large section of the tube, and a second similar chamber, B, communicates with the contracted section. These chambers, A and B, have pipes, C and D, connecting them with the gage for registering the rate of flow.

Let h_1 and h_2 represent the height in feet of the columns of water that would rise freely in C and D respectively, assuming that C and D are carried high enough and opened to the atmosphere at the upper end. Let a_1 and a_2 = the areas of section at A and B, respectively, and v_1 and v_2 the corresponding velocities. Let H = the height to which the water would rise when it is not flowing, and Q = the volume discharged per second, then

$$Q = a_1 v_1 = a_2 v_2$$

$$v_1^2 = 2g(H - h_1) \text{ and } v_2^2 = 2g(H - h_2).$$

Assuming no loss of energy between A and B,

$$H = \frac{v_1^2}{2g} + h_1 = \frac{v_2^2}{2g} + h_2$$

$$\frac{v_1^2 - v_2^2}{2g} + h_1 - h_2 = 0.$$

Inserting in this expression the values of v_1 and v_2, in terms of Q, a_1 and a_2, and solving for Q, we have

$$Q = a_1 a_2 \sqrt{\frac{2g(h_1 - h_2)}{a_1^2 - a_2^2}}.$$

This may be called the theoretical discharge. Dividing this expression by a_1 gives the velocity v_1 and dividing it by a_2 gives the velocity v_2. Owing to frictional resistances to the flow of water, there is an actual loss of energy between A and B, so that this expression must be multiplied by a coefficient, thus

$$q = ca_1a_2\sqrt{\frac{2g(h_1-h_2)}{a_1^2-a_2^2}}.$$

The value of c has been determined by experiment to lie between 0.95 and 0.99.

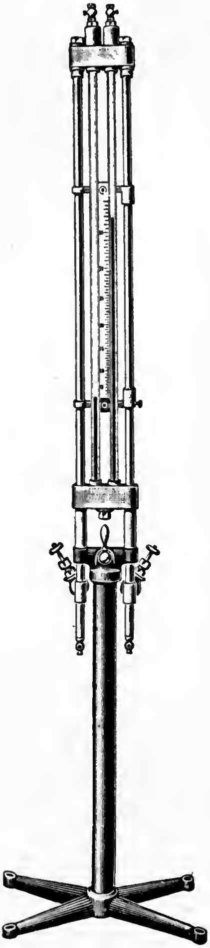

FIG. 60.

Fig. 60 shows the recording apparatus on a form of the Venturi meter, adapted for laboratory use, in which the difference between h_1 and h_2 shows directly on a scale that may be graduated to read directly the rate of flow. This reading may be in cubic feet per hour. gallons per minute, or as may be most convenient.

It should be noted that while this instrument shows the rate of flow, it does not of itself record the quantity of water that has been delivered through the tube. To do this it is necessary to combine it with a recording mechanism. In some forms of the instrument this mechanism actuates a counter in which the speed of movement is governed by the rate of flow. In other forms the rate of flow is recorded by a pen in a continuous line on a paper that is moved by a clock mechanism.

The Venturi meter is generally used for measuring the discharge through large water mains. For this purpose it is said to be more reliable than a self-contained meter, where the parts are liable to wear and thus increase the error of the readings.

Pitot's Tube.—The Pitot tube is a simple and, in its improved form, reliable instrument for determining the velocity of a current from indications of its pressure. It was first used for this purpose by Pitot in 1730. In its simplest form it consists of a vertical glass tube with a right-angle bend at the lower end placed so that its mouth will point toward the direction of flow. The impulse pressure of the flowing water is balanced by a column of water raised in the other leg of the tube above the general level of the stream. Pitot, for his use, enlarged the mouth of the tube to a funnel or bell shape, as shown in Fig. 61. This, however, causes the liquid to rise a height h, which is about $1\frac{1}{2}$ times the true height or head due to the velocity. This form of entrance is additionally objectionable because it interferes with the current, and the velocity in front of the mouth is not the same as the velocity of the unobstructed stream.

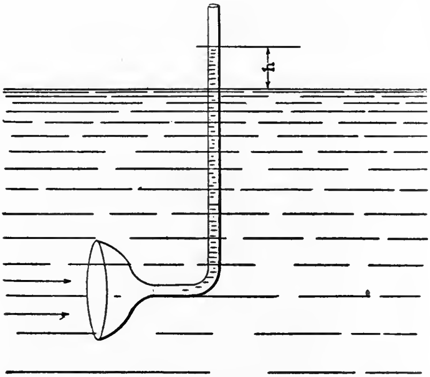

Fig. 61.—**Pitot Tube with Bell Mouth.**

Fig. 62 shows the improved form of orifice employed by Darcy and Bazin, in which the tube is drawn out very small with the great benefit of interfering little if any with the natural velocity of the stream; and also that the reduced size of opening tends to check oscillations of the column of water in the tube, instead of encouraging them as is the case of a tube provided with a bell-shaped mouthpiece. In the drawn-out form, shown in Fig. 62, Darcy found that when it was placed as shown at P_1, the height h was almost exactly

$$h = \frac{v^2}{2g};$$

when placed as shown at P_2, having the plane of the orifice parallel to the direction of flow, the water rose practically level with the surface of the stream; and when turned with the mouth down stream like P_3, the water sinks to a depth h', which is nearly the same amount as the rise in case it is headed up stream like P_1. If h' be the rise in the column P_1 above the surface of the water and h'' be the depression in the column P_3 below the surface, the pressure head h will equal $\frac{h'+h''}{2}$ nearly. This form of tube is made use of in the pitometer described on page 119.

Darcy's Improved Pitot Tube.—An objection to employing a simple tube like Fig. 62 is the difficulty of reading the height h direct from the surface of the stream. This is overcome in Darcy's improved form of Pitot tube, by means of which readings can be made above the surface of the stream, or the instrument may be entirely removed from the water for that purpose.

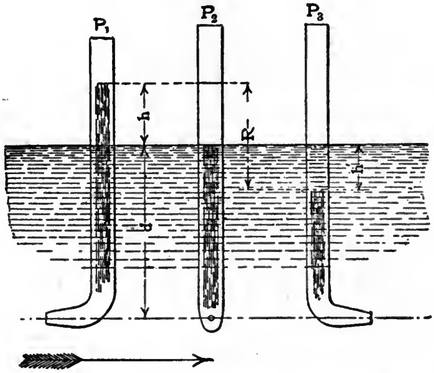

FIG. 62.—Improved Form of Tube employed by Darcy and Bazin.

Fig. 63 illustrates the leading features of the Darcy instrument. Two Pitot tubes, HE and JG, made of copper, have openings at right angles to each other. In making velocity measurements the instrument is so held that the opening in the end of the tube HE is presented against the current while that of JG is downward. The space between the tubes is filled with a solid piece of wood or metal for strengthening the tubes and holding them in place. The upper ends of the tubes are made of glass mounted on a wooden support WW, which in turn is supported by the clamp Q and the guide bracket K which surround the standard BB. Each glass tube

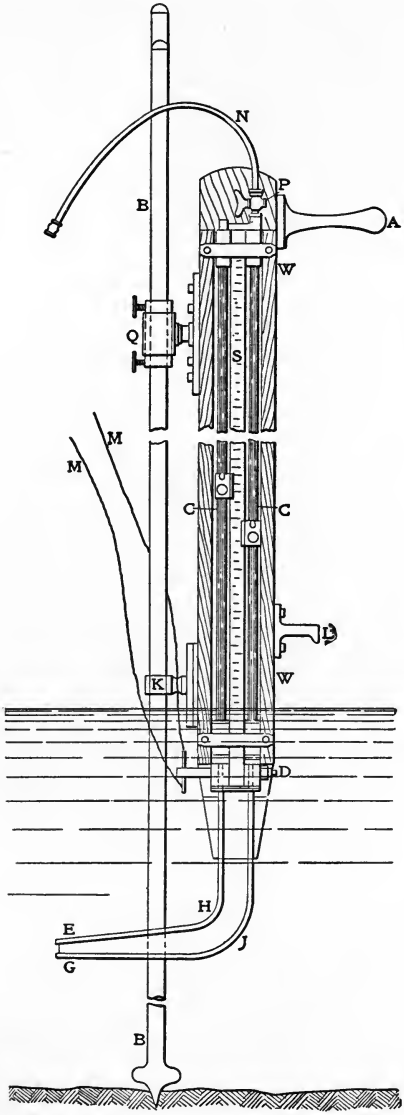

FIG. 63.—Darcy's Improved Form of Pitot Tube.

is provided with a vernier C for reading the height of the columns on a vertical scale S. By means of the handle A and hook L the instrument can be raised or lowered to any desired depth and held at the desired elevation by adjustment of the clamp Q, and when thus supported the main body of the instrument acting as a rudder, swings itself around the standard BB to a position parallel with the current and presents the opening of the tube EH up stream.

Connection of the copper tubes to the glass tubes is made through a two-way cock D which can be operated by cords MM. The glass tubes are connected at their upper ends by a brass fitting which is provided with a stop cock P, the outlet of which is provided with a piece of flexible tubing N with a mouthpiece. Having adjusted the instrument to the desired depth, with the cocks D and P open, water then rises in the tube EH to greater or less extent above the surface of the stream, while it rises in the tube JG to the same level as that of the stream. If then a little air be sucked out of tube N and the cock P closed, water will rise in both glass tubes an amount equal to their respective differences from atmospheric pressure and will stand with the same relative difference between their levels as they first had in the lower part of the instrument before any air was exhausted. The cock D is then closed, preserving the relative height of the columns, and the difference is easily read off with the instrument in place, or by removing it from the stream.

In using this instrument for obtaining the mean velocity of a stream, a number of readings have to be taken to obtain average velocity at any point, as the velocity of a stream varies at different points of its cross section. For determining the mean velocity of a section, the mean of averages of different points of the cross section must be taken. The mean velocity of a stream is quickly found by one accustomed to using the instrument, once the cross section is established. It is not well suited for measuring very slow velocities. A difficulty which should be guarded against is the liability of obtaining too small readings of the column connected with the tube GJ, due to dirt gathering in the opening at G. This defect can be guarded against by occasional examination of the instrument before exhausting air by the tube N. Using the instrument in clear water rarely gives trouble, but in all work of importance it should be calibrated in water of known velocity to obtain its mean variation of readings from the formula,

$$h = \frac{v^2}{2g}.$$

Darcy's instrument is used for measuring the rate of flow in an open stream. Its principle, though, can be applied in an instrument for measuring the rate of flow through pipes. This follows from an examination of Fig. 62. All three of the tubes there shown are subject to the static pressure of the fluid in the pipe. P_1 in addition is subject to the pressure due to the rate of flow, while in P_3 the static pressure is diminished by approximately a like amount.

The Pitometer.—This instrument is extensively used by water works engineers to determine the rate of flow through different water mains. The instrument shows the varying velocity of flow in a water main by the deflections of a colored liquid in a glass U tube. Its accuracy depends upon four things, viz., first, the proper setting of the instrument in the main; second, the use of the correct specific gravity of measuring liquid; third, the removal of air from the connections; fourth, the use of the proper decimal or coefficient belonging to the pipe where the pitometer is used, for as is well known, water runs more slowly near the wall of the pipe than at the center; hence to get the correct average velocity from which flow is figured, we must know what per cent it is of the observed center velocity. This average velocity always bears the same relation to the center velocity *in any one pipe* no matter what the rate of flow is, and, as we have found, this varies from about 70 to 90%, according to the age of the pipe or the roughness of its interior *surface.*

Fig. 64 shows the pitometer in its simplest form. It consists of the *Rod Meter,* containing the two Pitot tubes with nozzles for insertion in the pipe, the U tube for measuring the difference in level and a street connection, permanently attached to the water main for inserting the instrument.

The Rod Meter consists of a brass "sheath" of flat oval cross section containing two $\frac{1}{4}$-inch brass tubes, each terminating in a curved phosphor-bronze orifice at the lower end. At the upper end of each tube is clamped a finger, which engages the notch marked

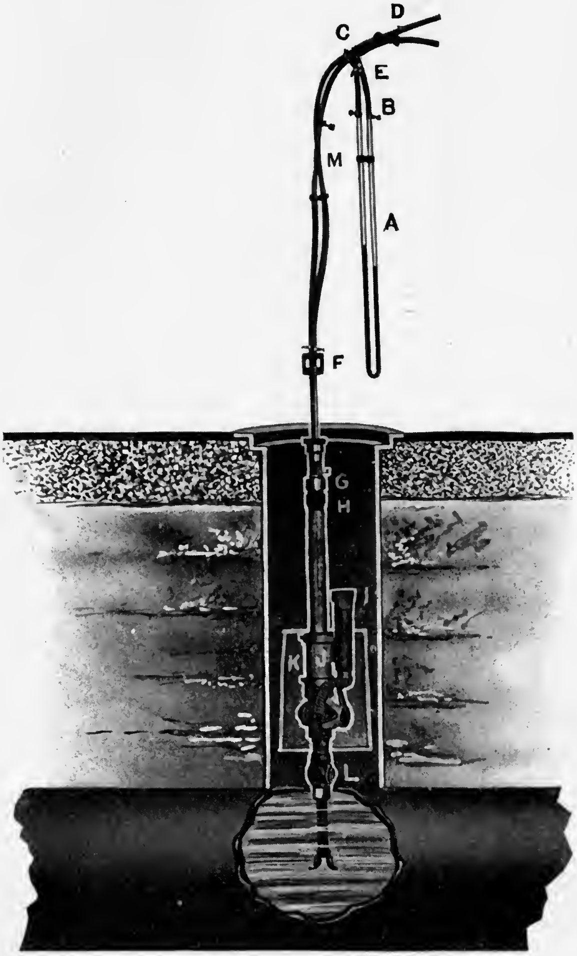

FIG. 64.—"Street Connection," Rod Meter and Manometer in Place.

"shut" of a loose sleeve in such a way that when the tube is revolved to one position the orifices will be turned "in" ready for insertion through the 1-inch pipe tap. Turning the fingers to engage the other notches marked "open" the orifices will be turned "out" in a line parallel to the flat side of the oval sheath. This latter is the position of the orifices when in use, and care should be taken to see that the finger clamps are so adjusted that when in this position the orifices will be in alignment.

The "U" Tube is a glass tube about four feet in length, bent in the middle into U shape so as to bring the two legs near together. The top of each leg is connected by rubber tubing and the metallic tubes to the orifices of the meter. This U tube is filled for about half its height with a carbon tetrachloride mixture of definite specific gravity. When the orifices are brought into a current of water the velocity causes the liquid to rise in one leg and fall in the other. The vertical distance between the tops of the liquid in the two legs constitutes the "deflection" by means of which the velocity is known.

Street Connections.—In order to provide a convenient method by which the meter may be repeatedly used upon a water main laid beneath a street pavement, a street connection, shown in Fig. 65, is set at each point, where observations are required and the pavement restored. This street connection becomes a part of the pipe system and affords immediate means of access at all times.

The Traverse.—The accuracy of pitometer work depends very largely on the traverse and the determination of the pipe coefficient or decimal.

The pitometer measures velocity only at that point in the pipe at which the orifices are placed. If, while the discharge of a pipe is constant, the orifices of the pitometer be moved slowly along the diameter, it will be noticed that the velocities vary at each point —gradually increasing from the inner surface toward the center.

To determine the quantity of water being discharged, a traverse is first made of the pipe at the gaging point, and from this traverse the pipe coefficient (mean velocity divided by center velocity) is obtained. The orifices are then left at the center and the mean velocity *at any rate of flow* may always be found by multiplying the center velocity by this coefficient.

A sufficient number of traverse velocities should be taken to locate definitely a smooth curve. It may be found that the points are not falling on a single curve. This is due to a varying center velocity. The curve should consist only of points which are taken with the *same* center velocity. This may be accomplished by returning the orifices quickly to the center for a check reading.

In the practical use of this instrument a recording device is arranged to register continuously the deflection in the U tube. Tables are employed giving the velocity in feet per second for every possible amount of deflection of the liquid, in the various sizes of pipe in which the instrument is to be used.

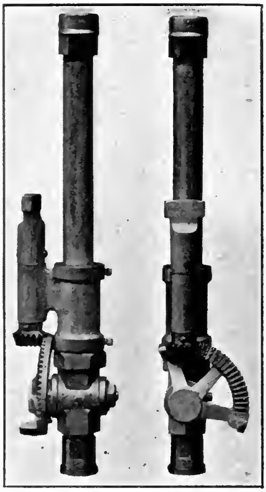

FIG. 65.—Pitometer Street Connection.

Weirs.—This method is used to measure the flow of water in aqueducts, ditches, and other open streams, where the size of the stream, flow of water, and other circumstances, permit the construction of a dam and weir. For measuring the flow of water discharged from a pipe, this method is also sometimes employed, using a tank of the form described on page 125.

A weir for measuring the flow of water is a notch in the top of the vertical side of a vessel or reservoir, through which water flows.

The notch is generally rectangular, the lower edge of the rectangle being truly horizontal, and its sides vertical. The lower edge of the rectangle is called the "crest" of the weir. Fig. 66 shows an outline of the usual form of weir, in which the vertical edges of the notch are sufficiently removed from the sides of the reservoir or feeding canal, so that the sides of the stream may be fully contracted. This is called a weir with end contractions. In another form, not so often used, the edges of the notch are coincident with the sides of the stream.

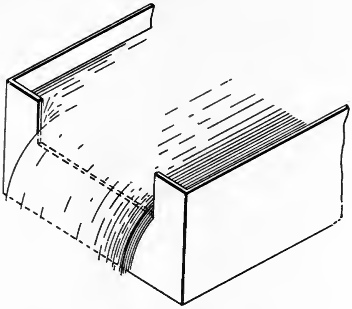

FIG. 66.

In taking accurate observations of the rate of discharge by means of a weir, it is necessary that the inner edge of the notch shall be a definite angular corner, so that the water in flowing out may touch the crest only in a line, thus ensuring complete contraction. In precise observations a thin metal plate should be used for a crest, as shown in Fig. 67. Where extreme accuracy is not important, it may be sufficient to have the crest formed by a plank of smooth hard wood with its inner corner cut to a sharp right angle and its

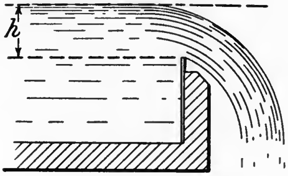

FIG. 67.

outer edge bevelled. In weirs with end contractions, the vertical edges should be made in the same manner, while for those without end contractions, the sides of the feeding canal should be smooth and prolonged a slight distance beyond the crest. The distance from the crest to the bottom of the feeding canal, or reservoir, should be at least three times the head of water on the crest. For a weir with end contractions, a similar distance should exist between the vertical edges of the notch and the sides of the feeding canal.

Let h = the head of water on the crest = the vertical height of the plane of the level surface taken well back of the weir, above the edge over which the water flows. Let b = the breadth of the crest in feet, and Q = the discharge in cubic feet per second. Then theoretically,

$$Q=\tfrac{2}{3}\,.\,\sqrt{2g}\,.\,bh^{\frac{3}{2}}.$$

Practically the rate of flow is not so great as this. Extensive experiments were conducted by Professor Francis in 1854, who deduced the following formulas for determining the rate of flow:

For weirs with full contraction,

$$Q=3.33(b-0.2h)h^{\frac{3}{2}}.$$

For weirs with one end contraction suppressed,

$$Q=3.33(b-0.1h)h^{\frac{3}{2}}.$$

For weirs with both end contractions suppressed,

$$Q=3.33bh^{\frac{3}{2}}.$$

The value of Q thus obtained is sufficiently accurate for ordinary purposes. If extreme accuracy is desired it is best to consult tables giving the number of cubic feet of water that will flow over a weir 1 inch wide and of any given depth. The figure thus found is multiplied by the width of the weir in inches.

The value of h should not be less than 0.1 foot, and it rarely exceeds 1.5 feet. The least value of b in practice is about 0.5 foot, and it does not often exceed 20 feet.

The Hook Gage.—The value of h must be determined with precision in order to avoid error in the computed discharge. Observations of its value are sometimes made by setting up a stake 6 feet or more behind the crest of the weir. The level of the water is first marked on the stake when the supply is shut off and the water just on the point of flowing over the crest. With the water flowing the level is again marked on the stake and the distance between marks is measured. More reliable observations are taken by means of the hook gage. A bent hook, with pointed end upward is inserted in the lower end of a rod sliding vertically in fixed supports, the amount of vertical motion being determined by the readings of a vernier. The vernier can be set to read 0.000 when the point of the hook is at the level of the water when it just reaches the crest of the weir. When the water is flowing over the crest the rod is raised by a tangent screw until the point of the hook is at the water level. With the water flowing, before the point pierces the surface, a slight ripple or protuberance will be seen to rise above it. The hook should then be carefully lowered until this ripple is barely perceptible, when the point will be at the true water level. The scale and vernier reading then indicates the value of h.

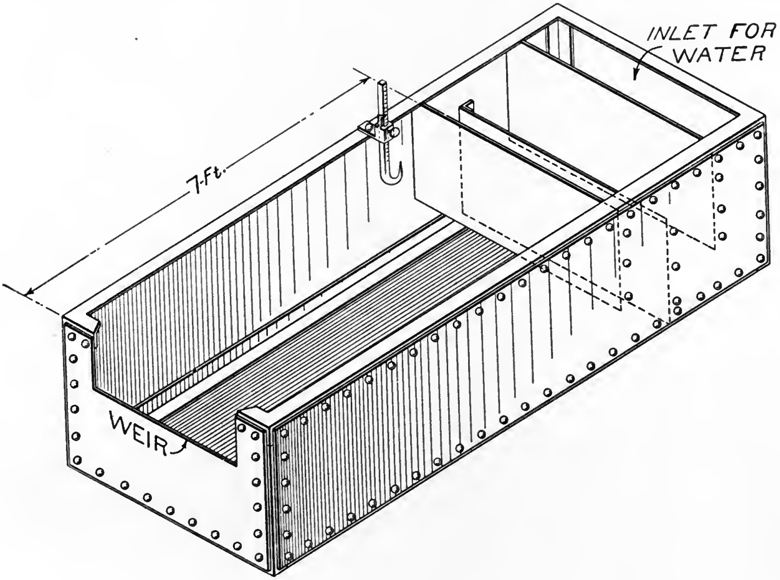

Fig. 68.

Tank for Weir Apparatus.—Fig. 68 shows a tank for use in measuring the flow of water from a pipe, by means of a weir. This tank and weir can often be constructed for use in cases where an accurate meter is not obtainable. In constructing such a tank it should be sufficiently long to permit the water to rise to a level and flow smoothly for a distance of at least 6 feet to the weir. The water enters at the end opposite the weir and flows under and over a series of diaphragms that are so placed as to remove the disturbing effect of the stream of water pouring in.

This tank and its operation have been described by Professor Spangler of the University of Pennsylvania. as follows:

First level up with water in tank from lower edge of weir to exact point of hook gage and mark on edge of tank. When running, raise hook until a slight hill of water just shows over point, but point does not show. Mark this on edge of tank for height of water over weir. The difference between these points is h. The vertical edges of weir must be exactly at right angles to the horizontal edge and the horizontal edge exactly level. The horizontal edge must be square at side within tank, over which water flows. In Fig. 69 if the water flows across the side from *a* to *b*, the edge *b* may be of any shape, but *a* must be square. In flowing over the edge *a* the water will turn upward and it will be possible to insert a finger nail at *b*.

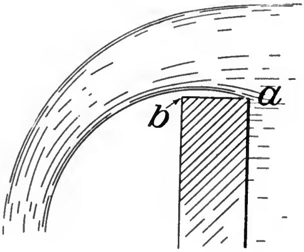

FIG. 69.

The hook gage used with this tank is made of $\frac{1}{8}$-inch wire inserted in the end of a wooden batten. The end of the wire is turned up to form a hook and the batten is made adjustable to clamp in a vertical position when held by a beam lying across the tank.

The Right-Angled Triangular Weir.—In 1858 Professor James Thomson, of Queen's College, Belfast, suggested the use of the right-angled triangular notch with its apex pointing downward, to take the place of rectangular weirs, because the latter were not adapted to the measurement of small and variable quantities of water. Another advantage of the triangular notch given by Prof. Thomson is, that the quantity of water flowing becomes a function of only one variable, viz., the head of water; while in the rectangular notch it is a function of at least two quantities: the head and the horizontal width. The application of the triangular weir at the present time is limited, but for some kinds of laboratory testing and for measuring small flows in irrigation work, it is very convenient.

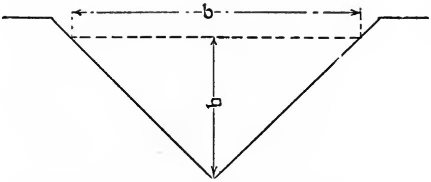

FIG. 70.—Triangular Notched Weir.

In Fig. 70 let

h = head of water,
b = width of notch at level of the water,

then the area of the notch filled is $\frac{1}{2}bh$; but in a right-angled triangle

$$b = 2h,$$

therefore,

$$\tfrac{1}{2}bh = h^2.$$

Theoretically the velocity of a body falling through a vertical distance h is,

$$\sqrt{2gh},$$

where g is the acceleration due to gravity and the theoretical discharge is,

$$q = h^2\sqrt{2gh} = h^{\frac{5}{2}}\sqrt{2g}.$$

Thus the discharge is proportional to $h^{\frac{5}{2}}$. This reasoning was substantiated by more rigorous mathematical development later.

Now it remained to determine by experiment whether there was some constant which multiplied by $h^{\frac{5}{2}}$ would give the quantity of water discharged for all values of h, that is,

$$q=ch^{\frac{5}{2}}.$$

After extended trials, with h varying from 2 to 4 inches, the following expression was arrived at,

$$q=0.306h^{\frac{5}{2}},$$

where

q = cubic feet discharged per minute, and
h = head measured vertically in inches from the still-water level of the pool down to the vertex of the notch.

It is the present custom to measure all heads of water in feet, and weir discharges are usually measured in cubic feet per second, thus

$$Q=CH^{\frac{5}{2}}.$$

The coefficient reduced to give the result in these units will change the equation to,

$$Q=2.544H^{\frac{5}{2}}.$$

The Miner's Inch.—Though not used in steam engineering experimental work, this unit is much used in certain parts of the country and is here explained for the information of the student. It is roughly defined as the quantity of water that will flow from a vertical standard orifice 1 inch square, when the head on the center of the orifice is 6½ inches. This gives a rate of flow of about 1.5 cubic feet per minute, which may be taken as the mean value of the miner's inch. Owing to the fact that, when water is bought for mining or irrigation purposes, a much larger quantity than one miner's inch is required, orifices much larger than 1 square inch in area, and of various sizes are used in measuring it. This leads to considerable variation in the mean value of the standard as used in various localities. The actual value ranges from 1.20 to 1.76 cubic feet per minute.

CHAPTER VI.

MEASUREMENT OF THE RATE OF FLOW OF AIR AND STEAM.

Anemometer.—This instrument is used in measuring the velocity of a current of air. In steam engineering work it is sometimes employed in boiler tests for determining the approximate quantity of air supplied for combustion.

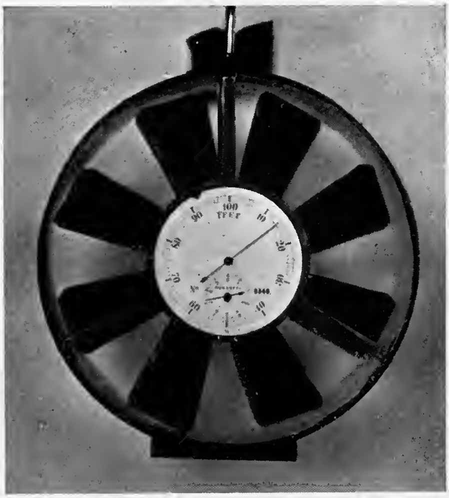

Fig. 71.

The usual form of such instrument is shown in Fig. 71. It consists of a fan wheel with dial for registering the number of linear feet of air that passes the fan. The index can in the usual form of construction be set to zero and the registering mechanism can be thrown in or out of gear at will.

To take an observation, the index is set to zero and the instrument is placed in the air current with the fan wheel *facing the current.* The disconnector is withdrawn and the observation commenced. At the end of the period of observation, touch the disconnector and throw the movement out of action, the result may then be read off. Commencing with the highest dial, note carefully what figure the index has *actually passed,* and add to this the figure last passed by the index of each succeeding dial, ending with the large hand. The reading represents the number of linear feet of air passed during the observation. This multiplied by the area in square feet of the cross section of air passage, will give the number of cubic feet of air registered.

In case the index cannot be set to zero, it should be noted that the reading of the instrument must be taken both before and after the observation. The difference will then give the number of feet of air that have passed.

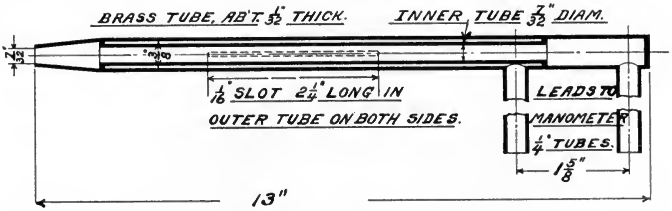

FIG. 72.

Air measurements obtained through the use of the anemometer cannot be relied upon, since the velocities at different points in a cross section of an air pipe are not uniform. If taken at the center of the pipe a correction is sometimes applied to obtain the mean velocity through the pipe. This method is also inexact since air is an elastic fluid and does not always move in lines parallel to the axis of the pipe. This is particularly true where the velocities are low.

Pitot's Tube for Measuring Low Air Velocities. Taylor's Method.—In a paper by Naval Constructor D. W. Taylor, U. S. N., read before the Society of Naval Architects and Marine Engineers in 1905, the following method of measuring the volume of air delivered by ventilating fans was proposed. This method is now used for testing ventilating sets and forced draft fans for the Navy.

A special form of Pitot's tube is used as shown in Fig. 72.

The impact pressure is taken on the tapered end of this tube and communicated through the center tube to the right angle branch at the opposite end. The static pressure is communicated through the slots on sides, and the annular tube to the first right angle branch.

A nest of nine of these tubes is made up so that it exactly fits in a slot cut 2 inches wide and 13 inches long in the pipe on which the test is to be made. The tubes can be adjusted as to depth, depending upon the size of the pipe under test. Stops are placed so that when the tubes are swung out against them, the ends will come at a distance from the center such that each tube represents an area equal to one-ninth of the whole. The arrangement is that shown in Fig. 73 where the cross section is divided into nine equal zones, with one of the tubes in each zone.

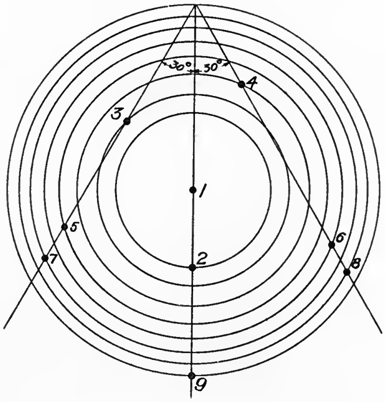

FIG. 73.

It will be noted that tubes 1, 2 and 9 are in a vertical line, while tubes 3, 5 and 7 are in a line inclined 30° to the left and tubes 4, 6 and 8 in a line inclined 30° to the right, as shown further in Fig. 73. The depth of setting for each tube in any given diameter of pipe is taken from a diagram furnished with the apparatus.

The Manometer.—For measuring the flow with the tubes as thus arranged a special form of manometer is employed, as shown in Fig. 74. Two inverted cans are placed in a trough of water. Each of these cans is divided into nine compartments, each having the same cross sectional area, and a tube passes through the bottom of the trough above the surface of the water into each compartment. Connecting the nine impact pressure nozzles with the nine tubes under one can and the static pressure nozzles with the tubes under the other can we have a direct means of measuring the mean difference between impact and static pressure over the whole cross section of air duct. A sliding weight on a scale beam enables the

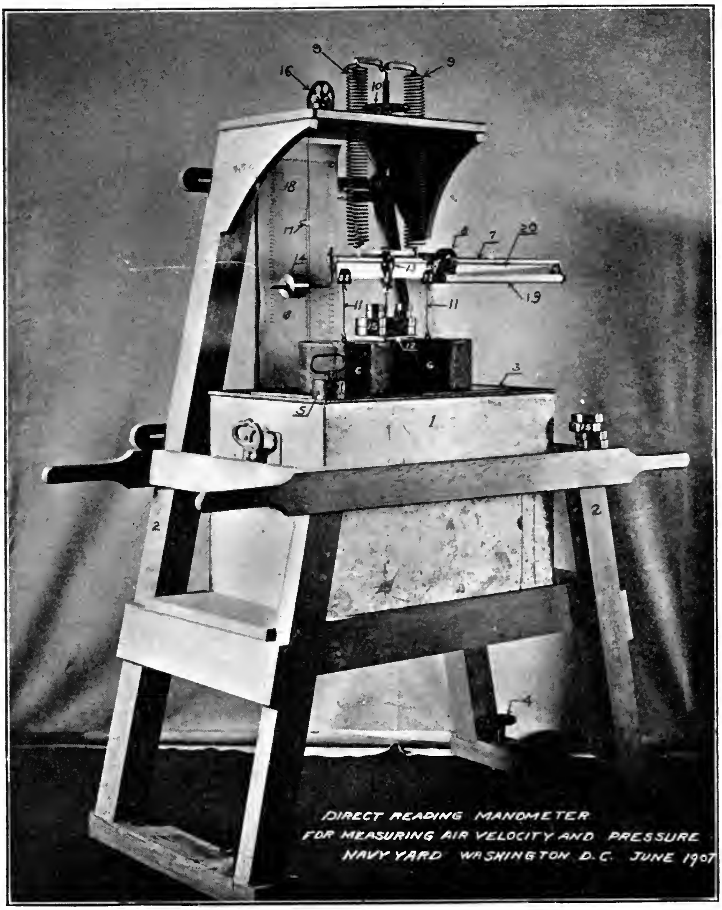

FIG. 74.

two cans to be balanced and the pressure read off in pounds per square foot.

Method of Calculating the Rate of Flow.—The velocity in the duct is given by the formula

$$v=\sqrt{\frac{2g}{W}(p_1-p_2)},$$

where v is the velocity in feet per second, W is the weight per cubic foot and (p_1-p_2) is the difference in pressures shown by the tubes.

For ordinary work it is sufficient to take $W=.0807$, which is the approximate value for dry air at an atmospheric pressure corresponding to normal barometer reading of 29.92 inches.

For more exact observations W is given by the formula

$$W=\frac{.080723}{1+.0020389(t+32)}\times\frac{b-0.378e}{29.921},$$

where t is the temperature in degrees F., b is the barometer reading, and e is the pressure due to the vapor in the air in inches of mercury. Tables and curves for applying these corrections have been prepared and are issued in pamphlet form by the Bureau of Construction and Repair, Navy Department.

Having obtained the mean velocity of the air, this multiplied by the area of cross section of the duct and by 60 gives the number of cubic feet discharged per minute, which is the result desired.

Use of a Single Pitot's Tube.—A single Pitot's tube placed in the center of the duct is sometimes employed, and a correction applied to give the mean velocity, but with low velocities, results thus obtained are not reliable. A single tube may be employed where the rate of flow continues during a considerable period of time, long enough to permit shifting the position of the tube and thus obtain a series of observations, the mean of which gives the mean velocity in the pipe.

Measuring the Rate of Flow of Steam.

Where steam is discharged through nozzles, the velocity is given very closely by the following empirical formula which was proposed by Lord Napier:

Flow in pounds per second = absolute initial pressure × area in square inches ÷ 70.

This rule is applicable where the terminal pressure does not exceed 58% of the initial pressure. Within these limits any variation in the terminal pressure does not affect the rate of flow.

When compared with results obtained, by measuring the water consumption on the trials of the Curtis marine turbines on the U. S. S. *North Dakota,* this formula gave results within 1 to 3%. The results obtained through measurement may have been in error to that extent.

Steam Meters.

The direct measure of the efficiency of a steam engine is the weight of steam used by it in a given time to produce a given power. In engine tests the steam is usually condensed and weighed, but the same purpose is accomplished much more easily if a reliable steam meter can be employed.

Steam meters may be conveniently grouped in two general classes, which, for lack of more suitable names, may be designated as *series* meters, and *shunt* meters.

The series meter is an integral part of the piping, the entire mass of fluid to be measured passing through the apparatus. The St. John's and Venturi meters are examples of this class. In the former the *volume* of fluid passing is determined by the rise and fall of a weighted plug valve and in the latter the *velocity* of flow is determined by the well-known principles of the Venturi tube. Both are indicating instruments and show only the rate of flow.

The Sarco Steam Meter.—This is another example of the series meter. If steam be allowed to expand from a vessel in which there is a pressure p_1 through an orifice into a lower pressure p_2 the theoretical weight of steam flowing out per minute when p_2 is nearly equal to p_1 is given by the equation

$$W = 40A\sqrt{\frac{p_1 - p_2}{v_1}},$$

where W is the weight of steam issuing per minute in pounds; A is the area of the orifice in square inches; p_1 and p_2 the pressures in pounds per square inch (absolute); and v_1 the specific volume of the steam at pressure p_1 in cubic feet per pound.

This principle is applied in the Sarco meter, where a disc, 1 in Figs. 75 and 76, $\frac{11}{16}$ inch thick, held in position by the bolts surrounding it, is placed between two flanges at a point in the pipe-line where it is desired to measure the weight of steam passing.

This disc has a bore slightly smaller than that of the pipe, causing the steam to be throttled to the extent of a drop in pressure of about $\frac{3}{4}$ pound per square inch, or less than would be visible on an ordinary pressure gage.

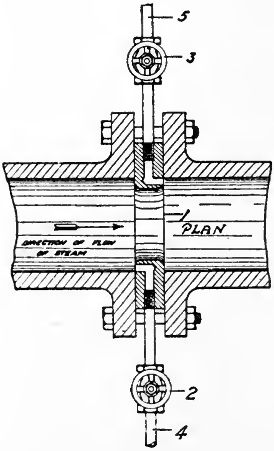

Fig. 75.

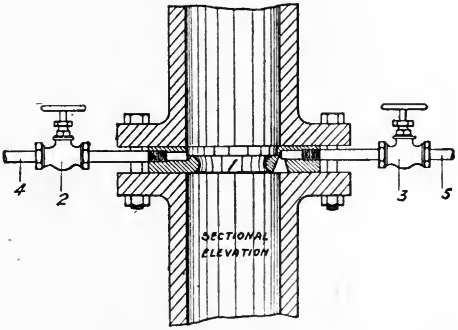

Fig. 76.

The difference in pressure on the two sides, which is the medium through which the Sarco meter determines the flow of steam, is conveyed to the instrument through copper pipes of $\frac{1}{4}$-inch (or larger) internal diameter, which connect with holes drilled in the disc, and communicate with the high and low pressure sides.

For vertical pipes the outlets of these connecting pipes are counter-sunk (Fig. 76) in such a way that no water can collect in the bore which points upwards, as this would cause an unequal head on the two sides of the meter. The connecting pipes, before being led to the instrument, are carried along horizontally in the same plane for a few feet with the same object of preventing a difference in head of water on the two sides which might result from unequal condensation. The pipes between the disc and meter are always kept filled with water.

The Recorder.—The high-pressure side of the throttle disc is connected through a three-way cock or valve 7 (Fig. 77) to the pipe 9; this leads into a mercury reservoir 10, which in turn connects to a hollow cone 12 through the tube 11.

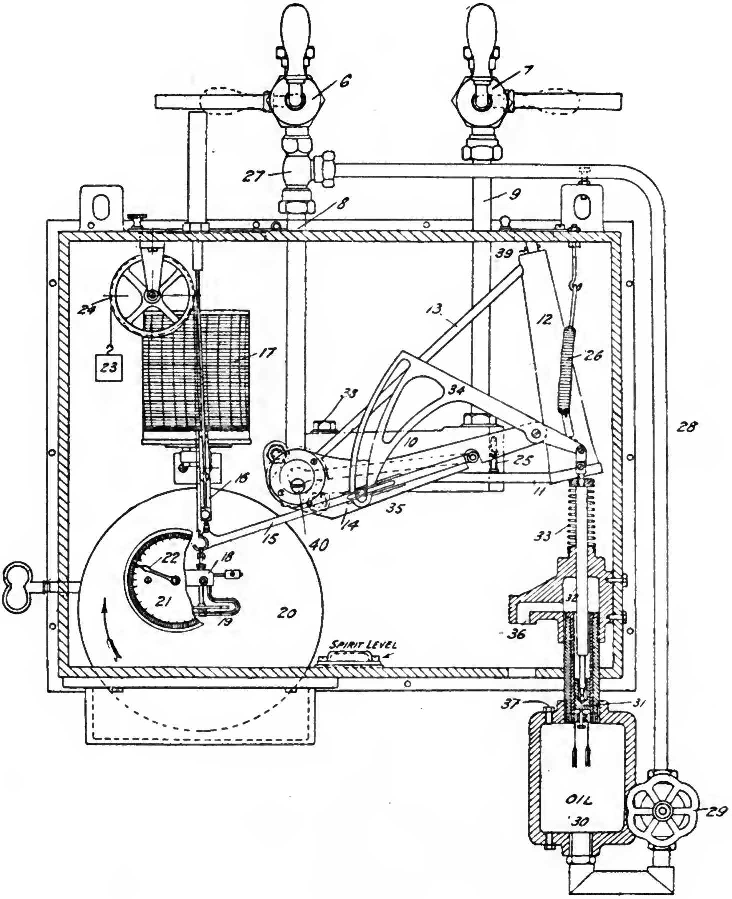

FIG. 77.

The cone 12 is suspended by means of springs 26, and has a connection 13 at its upper end. This gives access to the low-pressure side of the disc through a special port and the tube 8. Thus it will be seen that the higher pressure, acting through the water in the connecting tubes upon the mercury in 10 will tend to drive this out along tube 11, thus causing the cone 12 to sink. On the other hand, the lower pressure from the other side of the disc will press on the surface of the mercury through 8 and 13, attempting to force it back into 10. The difference between the two pressures will determine the position of the cone 12. Its movements are recorded on a chart 17 by means of a pen gear 16, operated through levers 14 and 15.

The chart is driven by clockwork; it is arranged for 24 hours, and is calibrated directly in pounds of steam per second. The total consumption over any period may be directly obtained from this by an ordinary planimeter. The charts and throttle disc to correspond are varied for each different size of pipe, and arranged so as to permit of the maximum flow of steam likely at the point in question to fall within the range provided.

Where it is desired to have a record of the total flow of steam over a period, an integrator or totaliser is fitted.

This consists of a disc 20, driven by a separate clock movement, and a friction gear 18 suspended from the pen lever 15 and moving up and down with it on the surface of the disc 20. A friction wheel 19 is driven by the disc, and, by means of a worm gear, causes the pointer 22 to move around dial 21. The speed of the pointer will then depend upon the position of 19 in respect of the periphery of disc 20. The dials are calibrated in pounds of steam, and are read once in 24 hours.

As accurate results could only be obtained with the instrument as so far described where the steam pressure is constant, automatic compensators are used where fluctuations exceeding 5 per cent have to be dealt with.

These regulators consist of an oil chamber 30 which communicates through small holes with a piston 31. The piston rod 32 is held down by a strong spring 33 connecting to a segment lever 34.

The regulator is put under pressure through tube 28 (connected at 27) and controlled by the valve 29. When piston 31 is forced upwards, the spring 33 extends, and this causes lever 34 to swing downwards, thus shifting the fulcrum of the pen lever and so automatically correcting the chart and integrator readings.

A simple form of indicating instrument is constructed on the same principle as the recorders, for use as a load meter. Attached to the front of a steam boiler with the throttle disc inserted in the main steam pipe, immediately behind the boiler stop valve, these little meters do excellent service in showing instantly the slightest change in the load, thus enabling firemen to adapt their firing and prevent the otherwise inevitable loss of pressure—usually the first indication of a change.

Shunt Meters.—In the shunt meter only a portion of the steam to be measured is diverted through the apparatus, the velocity of flow through the shunt being an indication of that in the main pipe. In this class one or more small openings $\frac{1}{2}$ inch or less in diameter suffice for attaching the apparatus to the pipe. One instrument suitably calibrated may answer for any size of pipe. The Pitot tube forms the basic principle of practically all meters of this class.

FIG. 78.

The General Electric Company's Steam and Air Flow Meters.—The principle governing the action of the flow meter is a modification of that of the Pitot tube. A brass nozzle plug, Fig. 78, screwed into the pipe at the point where the flow is to be measured, carries two sets of openings: a leading set, facing the direction of flow and extending diametrically across the pipe; and a trailing set, consisting of two openings at 90° and one at 180° to the direction of flow. The impingement of the steam against the leading openings sets up in them a pressure equal to the static pressure plus the pressure due to the velocity head, while the trailing set is acted on by the static pressure less that due to the velocity. The difference in these values is a measure of the velocity, and for constant temperature and pressure, gives the rate of flow. The pressures existing in the two sets of openings are communicated through separate longitudinal tubes to the outer end of the plug and from there by $\frac{1}{4}$-inch iron pipes to the meter.

Recording Steam Flow Meter.—The Recording Steam Flow Meter, Fig. 79, is a curve drawing instrument, accurately calibrated to record the total rate of steam flow in pounds per hour in any diameter pipe at any condition of pressure, temperature or moisture.

In this meter there are two cylindrical hollow cups filled to about half their height with mercury and joined together at the bottom by a hollow tube. This " U " tube is supported on, and free to move as a balance about, a set of knife edges. The two pressures obtained by the nozzle plug are communicated to the cups by flexible steel tubing, whereupon the difference in pressure is equalized by a rising of mercury in the left-hand cup and a falling in the right-hand cup. Due to the displacement of the mercury, the beam carrying the cups tilts on the knife edges until the moment of the counter weights on the extreme right of the meter exactly balances the moment caused by the displacement of the mercury in the left-hand cup.

The motion of the beam is multiplied by levers and is registered by a pen. The time element of the meter consists of an eight-day clock driving a drum and feeding paper at the rate of 1 inch per hour. Charts are supplied in sizes to measure a flow of from 2000 to 240,000 pounds per hour, and of sufficient length to last one month. The rate of flow can be read at any instant or the average rate of flow calculated for a given time.

Automatic Pressure Correction Device.—The meter is adapted to any condition of pipe diameter, pressure, superheat or moisture by a hand adjustment of a correction weight on a graduated arm. A chart supplied with the meter shows the correct position for any existing condition.

Referring again to Fig. 79, if the pressure in the steam main varies more than 10 pounds from normal, compensation is necessary for the error thus introduced. An automatic pressure correction device, consisting of a hollow spring, similar to the pressure

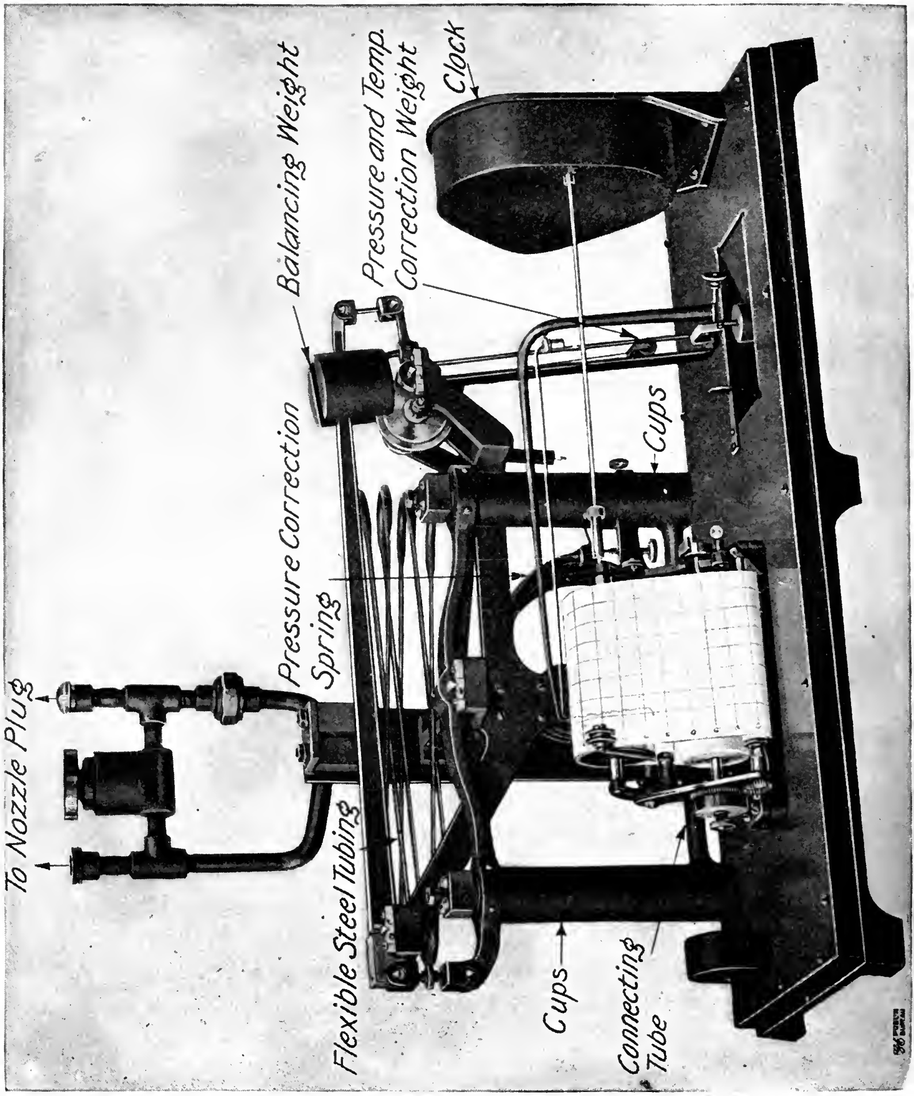
To Nozzle Plug
Flexible Steel Tubing
Pressure Correction Spring
Balancing Weight
Pressure and Temp. Correction Weight
Clock
Cups
Cups
Connecting Tube

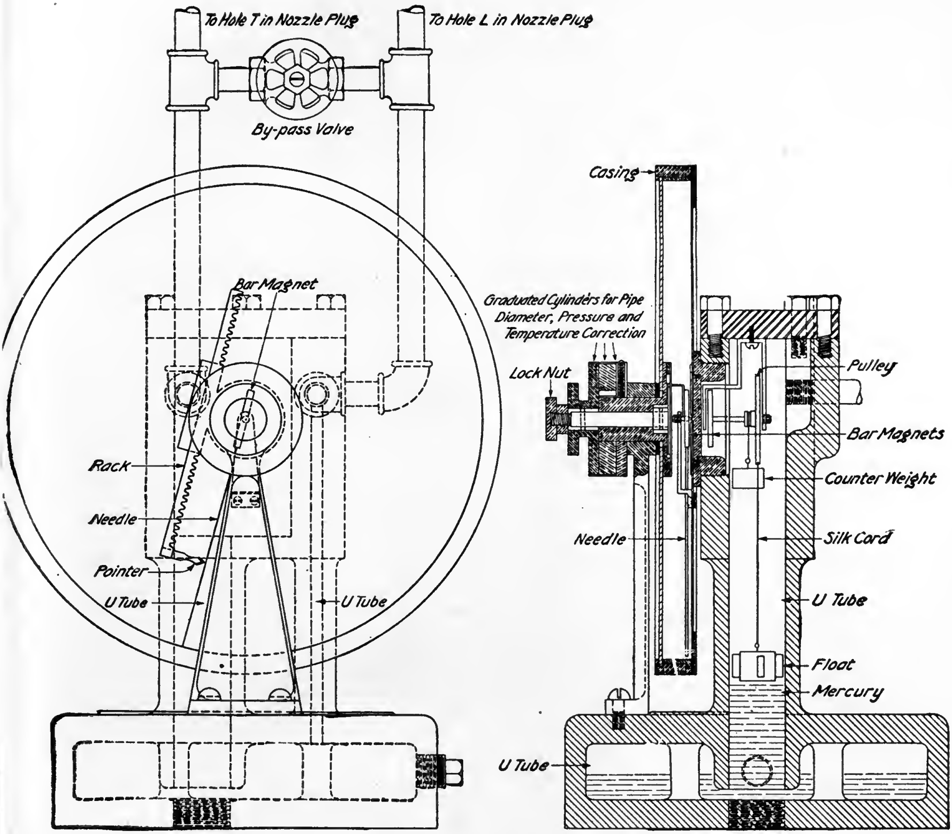

INDICATING FLOW METER
TYPE I FORM F
Figure A

FIG. 80.

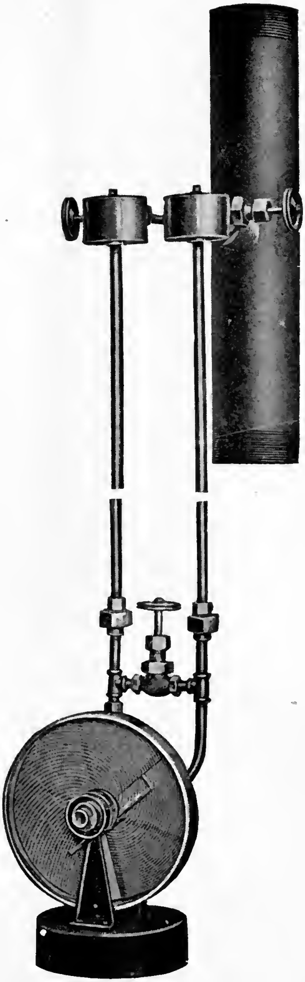

FIG. 81.—Indicating flow meter, type I, form F for measuring steam flow.

spring in a steam gage, is connected so as to be influenced by the static pressure of the steam at the point where the flow is being measured. Any variation of the static pressure causes the spring to expand or contract, and this movement actuates the small correction counter weight and affects the movement of the pen in such a manner that the recorded rate of flow is correct.

Indicating Steam Flow Meters.—The instrument shown in Figs. 80 and 81 will meet general requirements where an indicating rather than a recording instrument is required.

The meter consists of an iron casting, cored out to form a "U" tube, and partially filled with mercury. The difference in pressures, as transmitted from the nozzle plug causes a difference in the mercury levels, and the displacement of the mercury actuates a pulley by means of a small float suspended by a silk cord. The pulley moves a small "U" magnet on the end of the shaft next to the dial in proportion to the change in level of the mercury in the "U" tube. The indicating needle is mounted in a separate cylindrical casing. The pivoted end consists of a bar magnet, free to turn in the same plane as the magnet on the inside of the meter. The mutual attraction of the two magnets keeps them parallel; a packed joint to transmit the motion of the pulley to the indicating needle is thus eliminated.

Proper adjustments for the existing conditions of pipe diameter, pressure and temperature are readily made by setting the graduated cylinder which actuates the rack carrying the pointer. When these settings are made, the rack is rotated by hand until the pointer coincides with the indicating needle. The point on the calibrated dial at the intersection of the needle and pointer gives the true instantaneous rate of flow in pounds per hour per square inch pipe area.

Air Flow Meter.—The Indicating Air Flow Meter is identical in principle and method of operation with the Indicating Steam Flow Meter, except that water is used in the "U" tube as a working fluid and the chart dial is calibrated to read in cubic feet free air per minute at 70° Fah. per square inch pipe area.

CHAPTER VII.

MEASUREMENT OF POWER.

Power is the term used to denote how fast work is done, or energy transferred. Technically it is defined as the rate of doing work per unit of time.

Horse Power.—Taking the foot pound as the unit of work, the *horse power* has come to be recognized as the unit of power. One horse power is equivalent to 33,000 foot pounds of work done per minute.

Indicated Horse Power is the term used to denote the work done by the steam on the piston of a steam engine and takes its name from the indicator.

Brake Horse Power or Shaft Horse Power is the power transmitted to the shaft and is less than the indicated horse power by an amount equal to the friction of the moving parts. In an ordinary steam engine the brake horse power is about 85% of the indicated horse power. In a marine steam turbine the shaft horse power is usually assumed to be 92% of the indicated horse power that would be developed in a reciprocating engine that would transmit to the shaft the given shaft horse power.

Metric Horse Power.—The horse power, *cheval vapeur,* used in countries that employ the metric system, is 75 kilogrammeters of work per second. This is approximately equivalent to 32548-foot pounds of work per minute, or .9863 horse power in our units.

Efficiency of a Machine.—In any mechanical apparatus the efficiency is equal to the ratio

$$\frac{\text{Useful work done by machine}}{\text{Total energy received by machine}}.$$

A large portion of experimental engineering work is devoted to the determination of this ratio for different machines and resolves itself into the measurement of power and the calibration of the instruments employed.

The Steam Engine Indicator, used for determining the power developed in the cylinders of reciprocating engines, is described in text-books on the steam engine, together with the methods employed in taking cards and in calculating the power developed and the distribution of steam. We will therefore take up only the errors that are likely to be met with and their methods of correction.

These errors may be classified as follows:

(1) Errors due to incorrect calibration of indicator piston springs. Springs that are calibrated cold will show errors when hot.

(2) Badly fitting pistons. A piston that will not fall through the cylinder by its own weight is too tight and will produce errors due to friction. The normal friction of an indicator piston should be so small that there will not be even the thickness of a hair between the lines obtained from rising and falling steam pressures in the tests to determine the hot scale of the springs. At the same time if the piston is loose enough to leak sufficient steam to cause any back pressure, it cannot indicate correctly.

(3) Errors due to inertia of piston and pencil mechanism. A distorted diagram is produced, due to vibration of the pencil. These errors are now reduced to a minimum by making the mechanism as light as possible.

(4) Errors due to variable tension on cord. Paper drum inertia. With the crosshead of the engine moving away from the indicator, the cord unwinds and moves the drum against the action of the drum spring. On the return stroke the drum spring moves the drum, winding up the cord. With the engine standing still the tension on the cord depends on the amount of movement that has taken place against the drum spring, in other words on the position of the engine piston. With the engine in operation this tension is influenced by the inertia of the moving drum, and for one particular speed, the tension in cord throughout stroke will be approximately constant. The drum spring should be long so that the tension due to its compression will vary as little as possible throughout the stroke. The drum should be light to reduce inertia and the cord should be of such material as will stretch as little as possible, so as not to distort the indicator card.

(5) Errors due to incorrect indicator motion. The mechanism

for reducing the motion of the engine crosshead and imparting this reduced motion to the paper drum should be so constructed that the reduced motion will be exactly similar to that of the engine crosshead. If not, the card will be distorted. Various forms of reducing motions are in use, many of which are only approximately correct. Some, for the sake of their simplicity, have been adopted that are very incorrect. In engine tests the indicator motion should be analyzed to determine its accuracy in reproducing on a reduced scale the exact motion of the engine piston.

Calibration of Indicator Springs.—The manufacturers of recent high-grade indicators now calibrate their springs hot, so that the errors shown by them are small in comparison with what they were before the importance of so calibrating them was understood. A spring that registers correctly to scale at one temperature will not be correct at a temperature considerably above or below it. In the ordinary form of indicator, the spring is subjected to the heat of the steam, which increases with the pressure. For accurate work it is necessary to have a table of corrections, to be applied to the pressures obtained from the cards, in order to obtain the real pressures. Springs that have been accurately calibrated will change after a certain period of time, so that it will be found necessary to recalibrate them.

In all forms of indicator spring testing apparatus, the indicator is connected to a reservoir of steam in which the pressure may be varied at will, provision being made for accurately measuring such pressure. The earlier form of such apparatus, which was developed by engineer officers of the U. S. Navy, measured the pressure by means of a mercury column. While much work of great value was done with this apparatus, it was unhandy, owing to the great height of the mercury column, which it was necessary to build into the wall of a tall building. In later forms of such apparatus, a scale beam is employed to measure the pressure.

Professor Carpenter's Indicator and Gage Testing Apparatus.—This is shown in Fig. 82 and consists of a weighing scale mounted on a heavy cast iron box connected to the steam reservoir. A cylinder with a piston of $\frac{1}{2}$ square inch area is connected to this box in such a way that the piston balances the beam of the scale if there is no pressure in box.

The box is tapped in different places for the connecting of indicators or gages. In making a test, steam is admitted and the pressure weighed by the scale. The " friction of rest " between the piston and the cylinder in which it works is intended to be overcome by slightly rotating the piston with the finger, by means of the projections provided for that purpose. Accurate results can only be obtained after considerable practice.

Professor Cooley's Indicator Testing Apparatus.—This is shown in Fig. 83 with a section through cylinder and connections shown separately in Fig. 84. The indicator is attached to the indicator cock, mounted at *A*, above a cylinder *B*, in which is a rotating plunger *C*. This plunger is given a rapid rotary motion by means of a belt from a small electric motor, on the wheel *D*. The wheel *D* is mounted by a ball bearing and ball and socket joint on the step *E*, which is placed on the platform of a specially constructed platform scale. As pressure is applied in cylinder, the rotation of plunger eliminates the *friction of rest* between plunger and cylinder, so that the amount of the pressure can be accurately weighed with the scale beam. The wheel *F* serves to raise or lower the cylinder slightly, thus equalizing the wear on plunger.

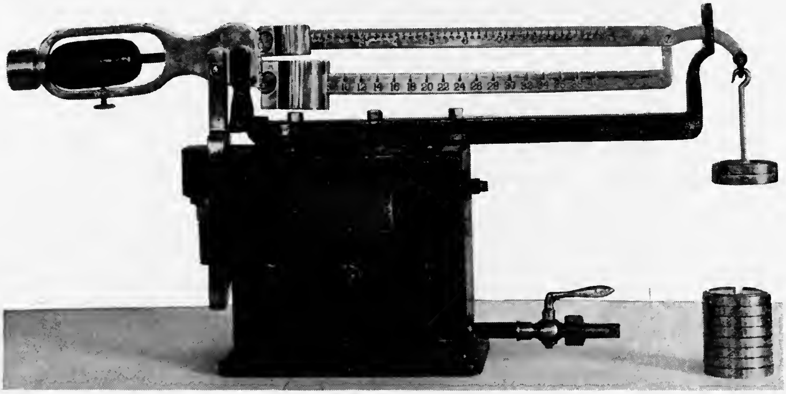

FIG. 82.

The cylinder *B* is in connection with a manifold under the table through pipe *G*. H is a connection to the exhaust, on which is a valve *I,* and a smaller by-pass valve *J.* Connecting to manifold under table are valves *K,* admitting steam; *L,* admitting air pressure; and *M,* admitting water pressure. A fourth connection, not shown, goes to an air pump for placing the manifold under a vacuum.

The grooved cup above wheel *D* serves to catch any liquid that leaks past plunger. Such liquid is carried off by the connections shown, and by a rubber tube, clear of the apparatus.

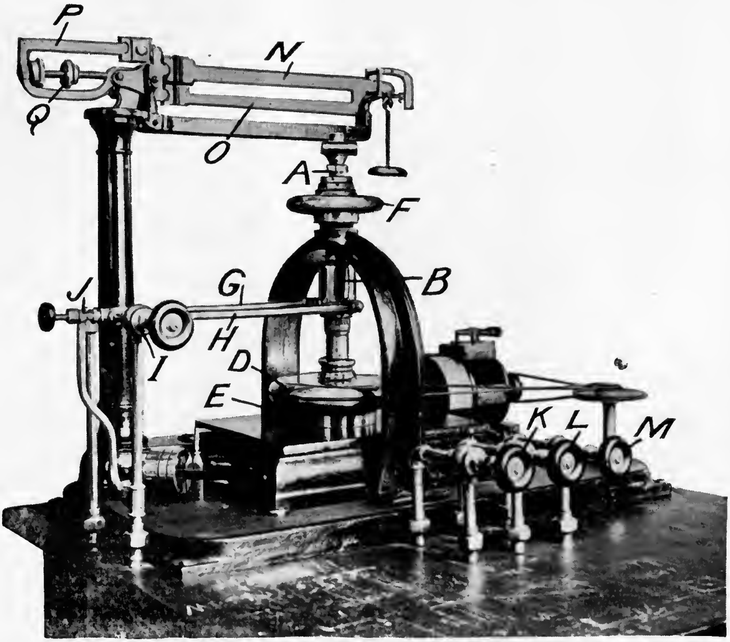

FIG. 83.

There are three beams on the scale. *N* is for increments of 5 pounds. *O* is graduated to measure fractional increments of 5 pounds, and *P,* at the left, measures descending increments, and is chiefly used in calibrating springs at pressures below the atmosphere. The counterpoise *Q* serves to balance the apparatus when no pressure is on.

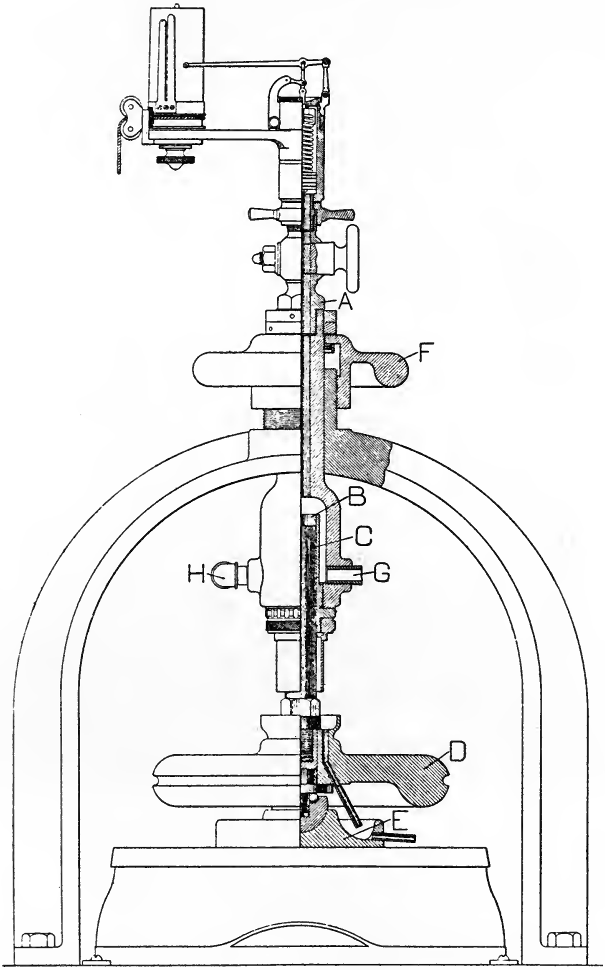

FIG. 84.

Method of Operation.—The indicator spring being in place and all ready for testing, start up the motor causing plunger to rotate in cylinder. With all steam off and the exhaust valve open to the atmosphere, place all poises at 0 and balance the scale by means of the counterpoise Q. Turn steam on and get indicator thoroughly heated. Then, by means of the indicator cock, turn off the steam and draw the atmospheric line. This will be the data line from which all measurements must be taken. Open indicator cock, place 5 pounds on the scale beam, and by means of valve K, regulate the pressure of steam so as to just a little more than balance the scale beam. Then by means of valve I, and by-pass J, the scales can be balanced perfectly.

When the scales have been balanced with the 5 pounds on beam, take a small wooden stick and tap lightly the cylinder of indicator. At the same time pull the drum cord, holding the pencil point against paper. Be sure that the scale is kept in perfect balance while this is being done. The light tapping of indicator cylinder is to overcome the *friction of rest* between indicator piston and cylinder.

By increasing the weights on scale by such increments as may be desired and taking the record on indicator card in this manner for each increase of pressure, the complete record is obtained.

This method of testing eliminates the effect of friction of indicator piston on the test cards. In a well constructed, properly proportioned indicator, this should be so small as to be negligible. To determine the effect of friction, a test line is drawn with the steam pressure ascending and another with it descending, both with the same setting of the scale. Half the distance between these lines is the friction.

Method of Calculating Results.—The area of plunger is $\frac{1}{2}$ square inch. The pressure per square inch on plunger, and therefore on indicator piston, will be twice the weight shown by scale beams. Calculating this and measuring and dividing by the height of test line above atmospheric line, we have the true scale of the spring.

Testing for Pressures Below Atmosphere.—The same apparatus may be used for tests below atmospheric pressure. The weight of plunger C and attached parts is such that even a perfect vacuum in cylinder *B* would not support it. A vacuum pump is connected to the manifold, with which the cylinder *B* is placed under a vacuum. By means of beam *P*, on the scale, increments of pressure below the atmosphere, are removed and tests made as before. Beam *P* is graduated to 6 pounds, corresponding to 12 pounds below the atmosphere in cylinder. This is about as great a vacuum as an ordinary vacuum pump will produce and the test is seldom carried further in practice.

The Hospitalier-Carpentier Manograph for indicating internal combustion engines and high-speed steam engines overcomes the inherent difficulties of the ordinary piston type of indicator which is not suitable for very high-speed engines on account of the inertia of its moving parts. The springs in an indicator also have a tendency to break, due to the almost instantaneous combustion pressures produced in the cylinders of internal combustion engines.

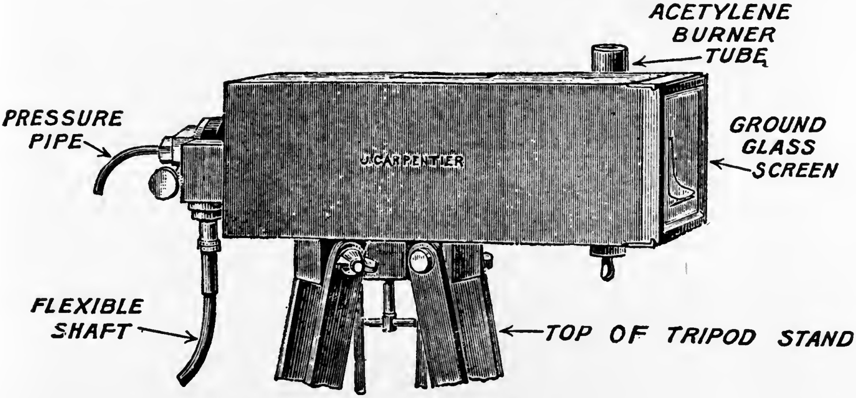

GENERAL APPEARANCE.

Fig. 85.

The manograph is shown in Fig. 85 with sectional views in Fig. 86. It substitutes a beam of light for the pencil of the ordinary indicator and this beam traces an indicator card on a ground glass screen. The light is projected from an acetylene burner furnished with the instrument, reflected by a mirror which is pivoted in two distinct planes at right angles to each other. Movement in one

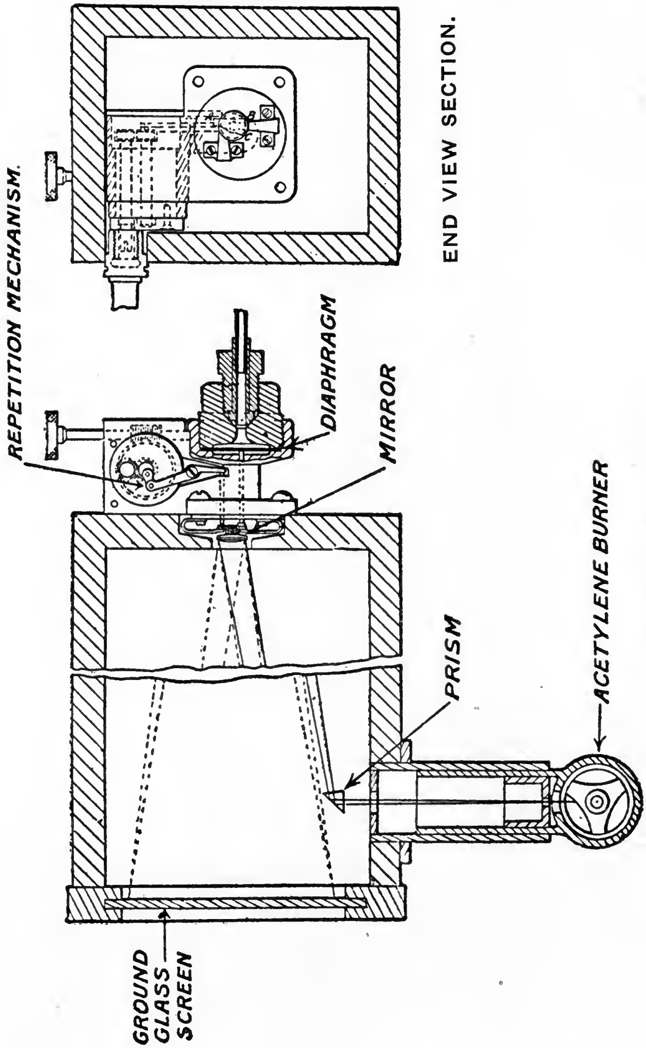

END VIEW SECTION.

TOP VIEW SECTION.

Fig. 86.

plane is obtained from the crankshaft through a flexible connection to the mirror mechanism, thus producing horizontal motion of the beam of light on the screen. A pipe connects the combustion chamber of the cylinder with a small circular diaphragm, so arranged that deflections in the diaphragm caused by pressure in the cylinder act upon the mechanism, so as to rotate the mirror in the other plane and produce vertical movement in the beam of light. The diaphragm corresponds to an indicator spring, and may be changed to suit any desired pressure. The card outlined on the screen is correct as regards pressures in the cylinder, but it must be corrected for the angularity of connecting rod, which is not the case with the ordinary steam engine indicator.

The mechanism for moving the mirror is arranged so that the card may be brought to synchronism with the strokes of any piston. Pipes leading to all the cylinders of a multicylinder engine may be used in succession by means of a several-way cock, thus making it possible to indicate the whole engine with one instrument.

When desired, the screen may be removed and a plate holder and photographic plates substituted, in order to obtain a permanent record. The principle use, however, is in connection with the screen, since the observer is enabled to note immediately the effect upon the card of various changes in the adjustment of the engine such as the time of ignition, the position of throttle, the richness of mixture, etc. This feature makes it particularly valuable for instruction purposes.

Ripper's Mean Pressure Indicator.—This instrument, shown in Fig. 87, consists mainly of a composition valve box, having pipe connections to both ends of the engine cylinder, and fitted with two dial pressure gages. By the automatic action of the valves in the valve box one of these gages is always in communication with the driving or impelling steam pressure acting on the piston, while the other receives the back pressure acting against the piston. The gages are fitted with fine regulation valves, and these are throttled until the pointers are practically steady. They will then indicate the exact mean of the varying pressures they are subject to, and the difference between the readings of the two gages is the total mean effective pressure acting on the piston.

The details of the instrument are shown in Fig. 88. Connection is made to the cylinder ends by means of the pipes *A* and *B*. The pipe *C* is connected to the gage showing the mean forward pressure and the pipe *D* to the gage showing the mean back pressure.

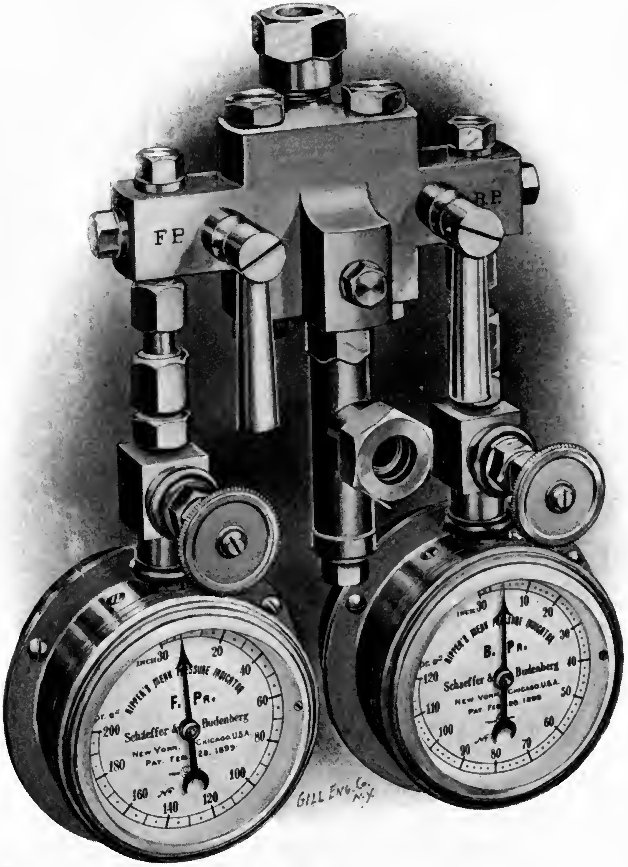

Fig. 87.

The constant communication of the forward pressure gage with the forward pressure side of the piston is secured by means of the ball valve *M,* which is pushed forward at the end of every stroke by the greater pressure of the incoming steam, thereby making communication between the forward pressure gage and the high pressure side of the piston and closing the communication to the other side of the piston. Similarly, the double beat valve *N*, under the action of the steam, makes the communication between the back pressure gage and the back pressure side of the piston. *S* and *T* are dirt collecting pockets, which may be cleared by removing the plugs *V* and *W*.

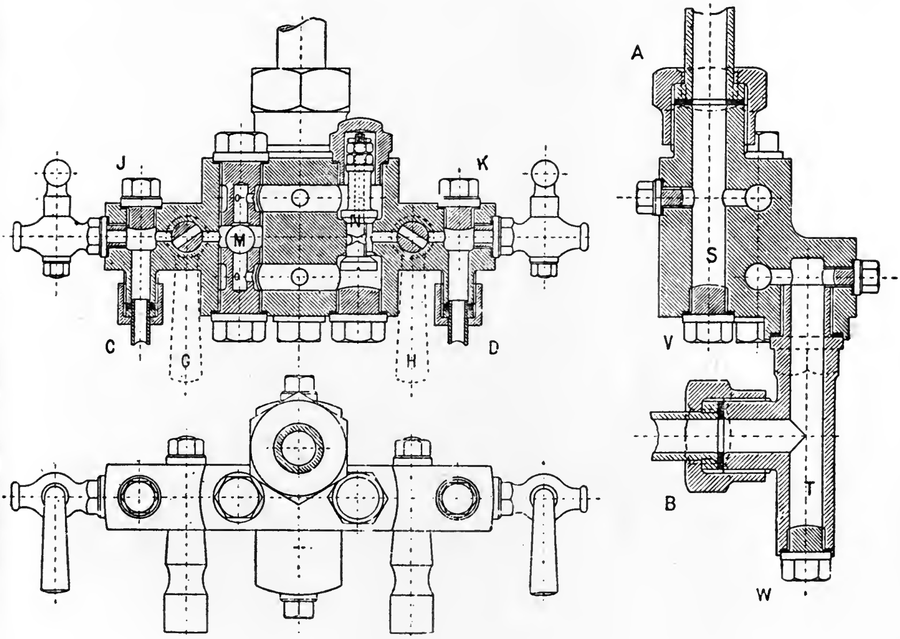

Fig. 88.

The taps at *J* and *K* are for blowing through the instrument when required, and the plugs *J* and *K* are for filling the gage syphons with water.

The mean pressures are obtained by throttling a fine adjustment valve fitted to each gage, but in addition, there are throttling cocks *G* and *H* fitted on the instrument for the purpose of retaining the water in the gage syphon so as to keep the gages cool. It is found that the water will not disappear from the syphons so long as these cocks *G* and *H* are sufficiently throttled to prevent the range of pressures in the syphon from exceeding about 10 pounds. By touching the syphon tubes *C* and *D* it is easy to ascertain whether they remain charged with water.

Since the mean pressures are obtained with this instrument by throttling, they are on a time base. They may be converted to the means on a distance base, as given by the indicator diagram, by adding a percentage depending upon the average point of cut off of the engines, as follows:

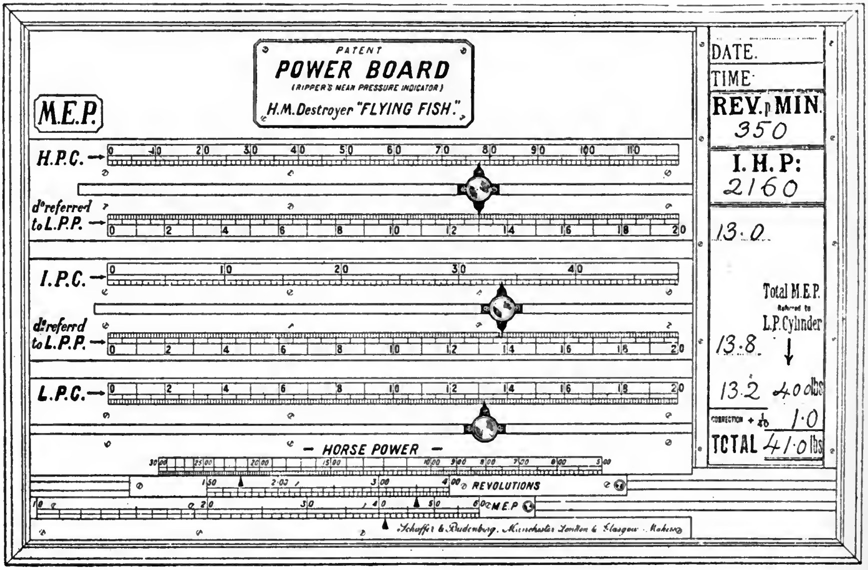

FIG. 89.

Point of cut off	0.3	0.4	0.5	0.6	0.7	0.8	0.9
Add to m. e. p.	1/70	1/30	1/25	1/30	1/40	1/50	1/100

This correction may be conveniently applied by adding the percentage to the total mean effective pressure referred to the low pressure, as illustrated in Fig. 89.

The inventor claims for this instrument that it gives for ordinary engines, a close approximation to the results obtained with an indicator. In engines working under a high degree of compression, such as locomotives and compound non-condensing engines, an error is introduced owing to the reversal of the valves taking place too early in the stroke. In these cases he recommends standardizing the instrument against an ordinary indicator for different positions of the link, and using the corrections thus arrived at.

Ripper's Power Board.—This affords a means of determining the indicated horse power, from the readings of the gages on the mean pressure recorder, by simple mechanical manipulation, without calculations, and enables the engineer to see almost at a glance, what the engines are doing and how the power is distributed among the cylinders.

Referring to Fig. 89, there are on the board a number of grooves, one for each cylinder of the engine. Each groove has a marker, with pointer to indicate the mean effective pressure in that cylinder, and, for all except the low pressure cylinder, there is an additional pointer to show the equivalent mean effective pressure on the low pressure piston. The relative positions of markers show at once the relative amount of work done in the various cylinders. By noting on a pad, arranged on the end of board, the various mean effective pressures referred to low pressure cylinder, adding them, and correcting, the total mean effective pressure referred to the low pressure cylinder is obtained.

A specially constructed horse power slide rule is fitted on the lower part of the board. By setting the lower slide to the total mean effective pressure referred to the low pressure cylinder, and the upper slide to the speed in revolutions per minute, the horse power may be at once read off.

Explanation of the Power Board.—The upper part of the board serves merely to facilitate reduction of the mean effective pressure in all cylinders to its equivalent referred to the low pressure cylinder. Adding to the mean pressure in the low pressure cylinder the results thus obtained for the H. P. and I. P. cylinders, the total mean effective pressure referred to the low pressure cylinder is obtained.

It will be seen from inspection of the lower part of the board that it is a special form of the duplex slide rule, adopted for solving the equation I. H. P. = mean effective pressure × revs. × const., which may be written in the form I. H. P. $=\frac{P\times R}{k}$. In order to limit the size of the instrument, the various scales are shortened, such portion only being furnished for each of them as is required for the particular engine for which it is to be used.

The lower fixed pointer, corresponds to the fixed pointer of a slide rule. The pointer on the M. E. P. scale may be placed at a distance from its zero equal to $\log k$ so that with the M. E. P. scale properly set the horizontal distance between these two pointers equals $\log P-\log k$. Now setting the "Revolutions" scale, so as to bring r opposite the second pointer, it is obvious that the horizontal distance between 0 on this scale and the fixed pointer represents the logarithm of the I. H. P. In order to obtain a direct reading of this value, a third scale of horse power is used, which is read opposite a pointer on the revolutions scale. In order to make the instrument more compact, this pointer is placed some distance to the right of the 0 on the revolutions scale, and the pointer on the M. E. P. scale is found to the left of the true value of c, these changes being compensated for by a corresponding shift in the position of the horse power scale.

Though devised for use in connection with the mean pressure indicator, this power board may be used with the ordinary engine indicator and a slide rule of this type may be constructed for use in calculating horse powers from brake or torsionmeter readings of any particular engine, where the calculations are made from the general formula

$$\text{Horse power}=\frac{P\times R}{k}.$$

Hudson's Horse Power Scale.—This is a compound slide rule for horse power, similar to that described above, but in place of the pointer on the lower fixed part of the instrument, as shown in Fig. 89, there is a scale of cylinder diameters, which makes the instrument adapted to any engine within the limits of its construction.

Another form of logarithmic scale, adapted to the computation of horse power, which may be readily constructed by anyone provided with the necessary drawing materials, is shown in Fig. 90.

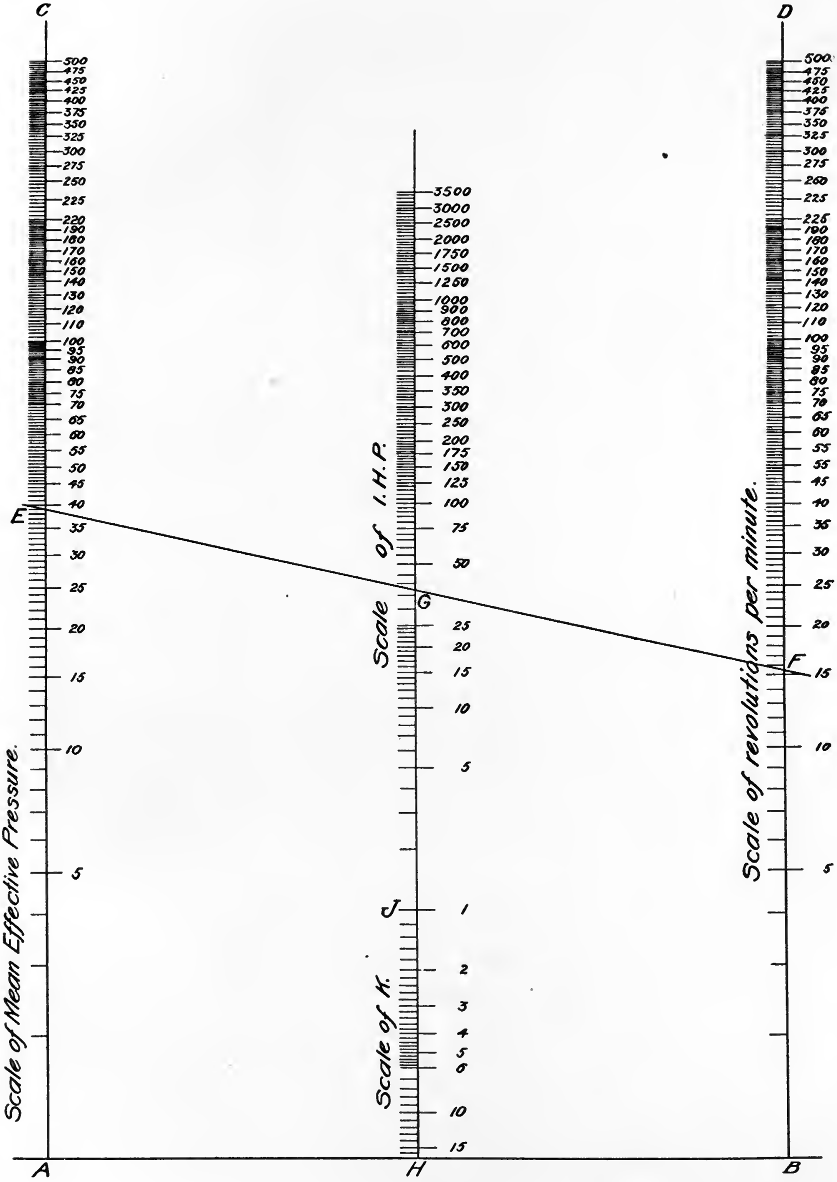
C
D
500
475
450
425
400
375
350
325
300
275
250
225
220
190
180
170
160
150
140
130
120
110
100
95
90
85
80
75
70
65
60
55
50
45
40
35
30
25
20
15
10
5
E
Scale of Mean Effective Pressure.
3500
3000
2500
2000
1750
1500
1250
1000
900
800
700
600
500
400
350
300
250
200
175
150
125
100
75
50
G
25
20
15
10
5
Scale of I.H.P.
J
1
2
3
4
5
6
10
15
Scale of K.
F
Scale of revolutions per minute.
A
H
B

FIG. 90.

Writing the expression for horse power in the form

$$\text{I. H. P.}=\frac{P\times R}{k}, \text{ or I. H. P.}\times k=P\times R.$$

We have

$$\log \text{I. H. P.}+\log k=\log P+\log R.$$

In Fig. 90 assume a base line AB and erect two perpendiculars, AC and BD. On one of these, as AC, construct a scale to represent various values of log P. On the other, construct a similar scale to represent various values of log R. Assume any two values of P and R, such that $AE=\log P$ and $BF=\log R$. Draw EF and bisect at G. Drop a perpendicular to the point H on AB. Then

$$GH=\frac{AE+BF}{2}=\frac{\log P+\log R}{2}=\frac{\log \text{I. H. P.}+\log k}{2}.$$

Lay off $HJ=\frac{\log k}{2}$. It is obvious then that G lies at a point such that $JG=\frac{\log \text{I. H. P.}}{2}$. By using a drawing scale of 1 : 2, with the point J as the zero point, JG may be graduated to represent the I. H. P. on a logarithmic scale, such that for any two values of P and R, falling on their respective scales at E and F, the corresponding I. H. P. lies on the scale JG, at a point G where this scale intersects with the mid point of the straight line joining E and F.

An instrument constructed in this manner may be adapted for general use by making the scale of I. H. P. adjustable in a vertical line. The value of HJ, or k, corresponding to the particular cylinder of the engine for which it is desired to use the instrument is then read downward from J, and the scale of I. H. P. set with the proper value of k falling at H. The instrument is then ready for use. When constructed for use in calculating the indicated horse power of the main engines, the various values of log k may, for convenience, be laid off and marked for each end of each cylinder, instead of in the form of a graduated scale. In order to make the diagram more compact, the base line may also be moved upward, corresponding to the minimum values of P and R that will be obtained in practice.

The diagram in Fig. 90 is laid down for a value of $k=16.8$, corresponding to a cylinder 25 inches in diameter and 2-ft. stroke.

Brake Horse Power.—This term is generally applied to the horse power actually transmitted to the shaft and is so-called from the brake which absorbs and measures the power transmitted. Shaft Horse Power is equivalent to the brake horse power, but it is measured in transmission without being absorbed by the apparatus used. This term is used by marine engineers to designate the power delivered to the propeller. The power of a marine turbine, measured by the torsion meter, is *shaft horse power.*

Absorption Dynamometers.

The Prony Brake.—This is the most common form of absorption dynamometer. Its construction is simple and it is usually extemporised when needed for the test of an engine.

Referring to Fig. 91 two wooden beams are clamped together, on a friction wheel carried by the shaft *A*, by bolts *CC*. *DD* are stops to prevent the beam turning through more than a small angle when the shaft is rotated. The long end of the lever *G* rests on a platform scale, while the short end, *F*, may or may not carry a hook on which weights are hung to balance the overhanging weight of the long end.

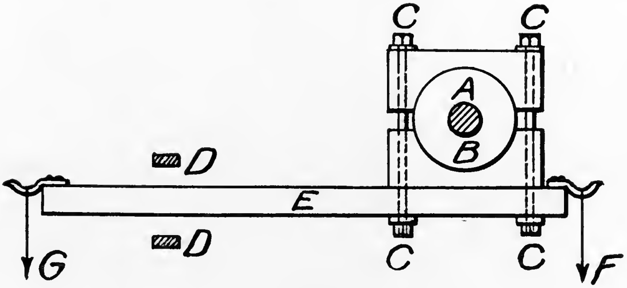

FIG. 91.

Suppose the shaft turning to the left. If the bolts *CC* be tightened, there is increased friction on the brake wheel with corresponding increased pressure at *G*. If the weight of the beam is exactly balanced at *F*, the pressure at *G* multiplied by the length of the arm a is the moment which must be overcome in turning the shaft. In one revolution the work done $= P \times a \times 2\pi$ and the brake horse power,

$$\text{B. H. P.} = \frac{2\pi a \times P \times R}{33000},$$

where a is the length of the arm in feet, P is the pressure at G in pounds, and R is the number of revolutions per minute.

The Water Brake.—The friction wheel and band of the Prony brake may be replaced by a runner and casing similar to the parts of similar name in a centrifugal pump. The blades on the runner are specially designed to give an *inefficient* pump and when water is admitted, the power of the engine is dissipated in churning the water, and this effect is greatly increased by restricting the flow. The casing is balanced on bearings which permit a slight rotary movement. An arm on the casing has its end resting on a platform scale and the tendency of the casing to rotate is measured by the pressure on the scale. The power is calculated in the same manner as for the Prony brake.

Small water brakes are in use in the laboratory for measuring the power of small engines. They are manufactured for testing large steam turbines and motors up to a capacity of several thousand horse power.

Electric Brake.—A dynamo may be fitted to be used as a brake. The armature shaft is connected to the engine under test. The field is mounted on bearings so that it can revolve freely through a small angle about the armature shaft and has a brake arm attached to it. When the dynamo is operated the power exerted tends to rotate the armature and is measured as in the case of the Prony brake.

Electric Horse Power.—When an engine is used to drive a dynamo in regular service the output of the dynamo is a measure of the work done, and is obtained by reading the voltmeter and ammeter. Volts × amperes = watts. Since 1 horse power = 746 watts, we have

$$\text{Electric horse power} = \frac{\text{volts} \times \text{amperes}}{746}. \qquad (1)$$

Remembering that the efficiency of a machine=

$$\frac{\text{useful work done}}{\text{total energy received},}$$

we have

$$\text{Efficiency of the dynamo} = \frac{\text{electric horse power}}{\text{shaft horse power}}. \qquad (2)$$

Therefore dividing (1) by the efficiency of the dynamo, which should be known as the result of previous tests, we may obtain the shaft horse power. By further dividing the result thus obtained by the known efficiency of the engine, we obtain a close approximation to the indicated horse power.

This may be better understood by reference to the accompanying diagram, Fig. 92, in which

$$E_1 = \text{Efficiency of engine} = \frac{\text{B. H. P.}}{\text{I. H. P.}},$$

$$E_2 = \text{Efficiency of dynamo} = \frac{\text{E. H. P.}}{\text{B. H. P.}},$$

$$E_1 \times E_2 = \frac{\text{E. H. P.}}{\text{I. H. P.}},$$

or

$$\text{I. H. P.} = \frac{\text{E. H. P.}}{E_1 \times E_2}.$$

FIG. 92.

Transmission Dynamometers.

Under this head is classed a wide variety of instruments used for the determination of the power transmitted by a shaft while employed in doing the work for which it was designed. No work is absorbed by such instruments other than that necessary to move them.

Belt Dynamometers.—Where power is transmitted by a belt if it is arranged to measure the tension on each side of the belt, the difference in such tensions multiplied by the speed of the belt gives the work done. Owing to the loss of power due to the stiffness of the belt, and the uncertainty due to slipping, such dynamometers have not been used extensively.

The Kenerson Transmission Dynamometer.—This instrument, the invention of Prof. Kenerson, of Brown University, is used for measuring the power transmitted by a shaft. Fig. 93 shows a sectional view of the instrument, while Figs. 94 and 95 show the instrument as applied to the driving shaft of an automobile. The lettering of corresponding parts in Figs. 93 and 95 is the same.

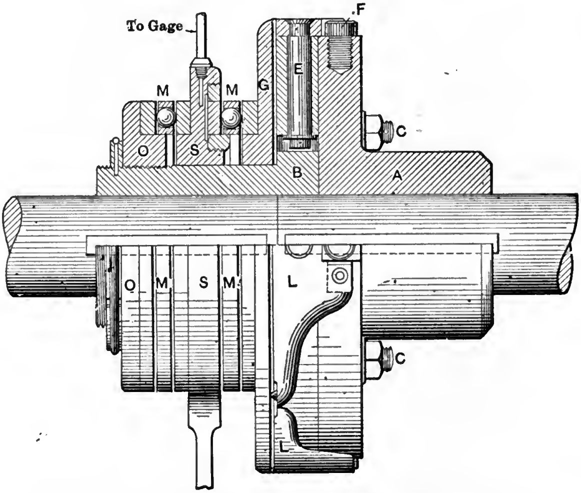

FIG. 93.—Dynamometer Shown in Section.

The couplings *A* and *B*, each keyed to its respective shaft, are held together loosely by the stud bolts *C*. The holes in the flange *A* are larger than the studs *C*, so that these studs have no part in transmitting power from one shaft to the other. The power is transmitted from *A* to *B* through the agency of the latches *L*, four of which are arranged around the circumference of the flange *B*. These latches are mounted and are free to turn on the studs *E*. The two fingers of the latches engage the studs *F* on the flange *A*. On the ends of each latch are knife edges parallel to the stud about

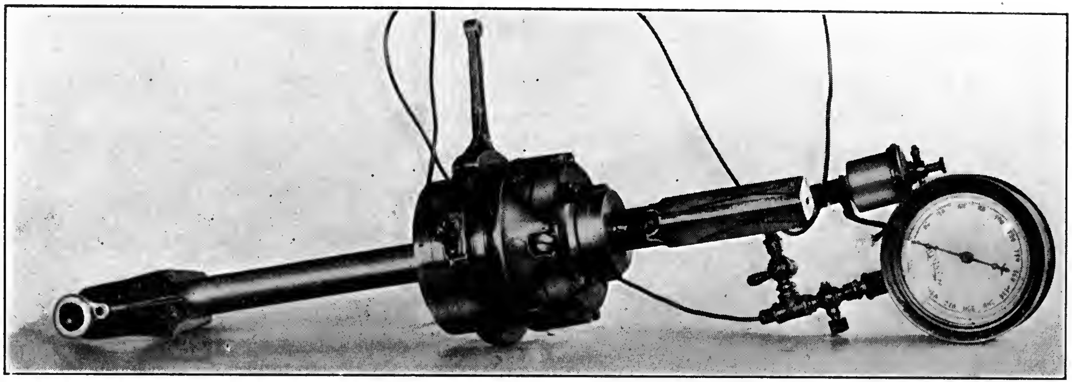

FIG. 94.—Transmission Dynamometer in Automobile Propeller Shaft, 30 H. P. at 500 R. P. M., Weight 25 lb.

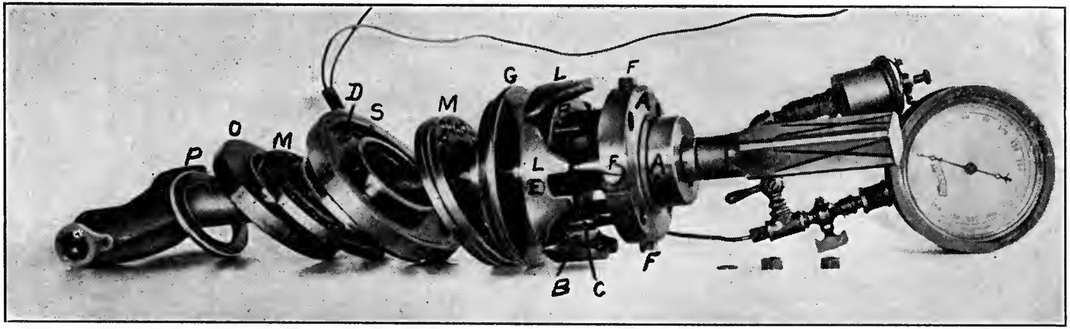

FIG. 95.—Transmission Dynamometer Taken Apart to Show Construction.

which the latch turns. For either direction of rotation of the flange *A* the latches *L,* which are in effect double bell-crank levers, will exert a pressure on the disc *G,* tending to force it axially along the

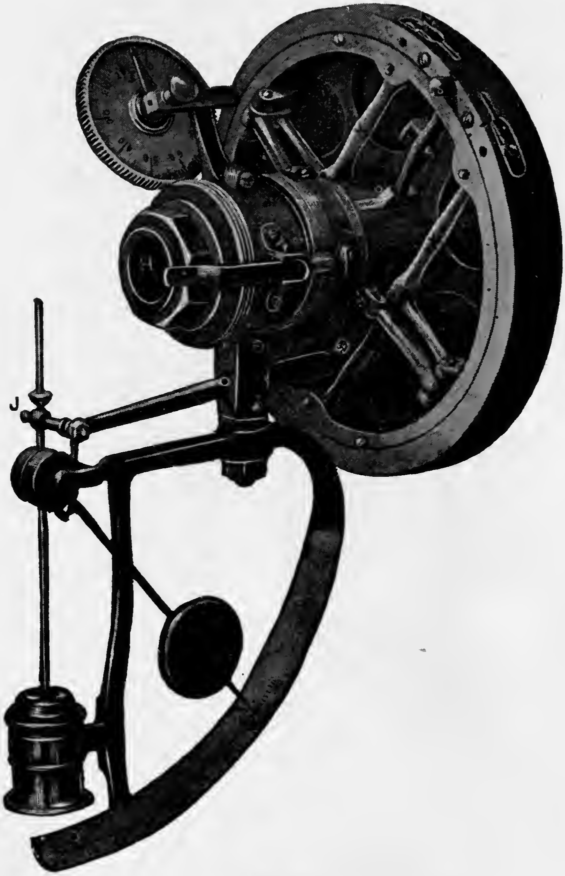

FIG. 96.

hub of the coupling *B,* and this pressure, it will be seen, is proportional to the torque.

Between the end-thrust ball, or roller, bearings *MM,* is held the stationary ring *S,* which is the weighing member. *O* is a thrust-collar screwed on the hub of *B,* and *P* is its check nut, which is ordinarily pinned to the hub when in position. The stationary member *S,* in the form of a ring surrounding the shaft, is prevented from rotating by fastening to some fixed object the attached arm shown in the view (Fig. 94) of the assembled instrument. In this ring is an annular cavity covered by a thin, flexible copper diaphragm *D,* against which the ball-race of one of the thrust-bearings presses. The edge of this ball-race is slightly chamfered to allow some motion to the diaphragm. The cavity is filled with a fluid, such as oil, and connected by means of a tube to a gage. The oil pressure measured by the gage is proportional to the pressure between the thrust-bearings, which in turn is proportional to the torque.

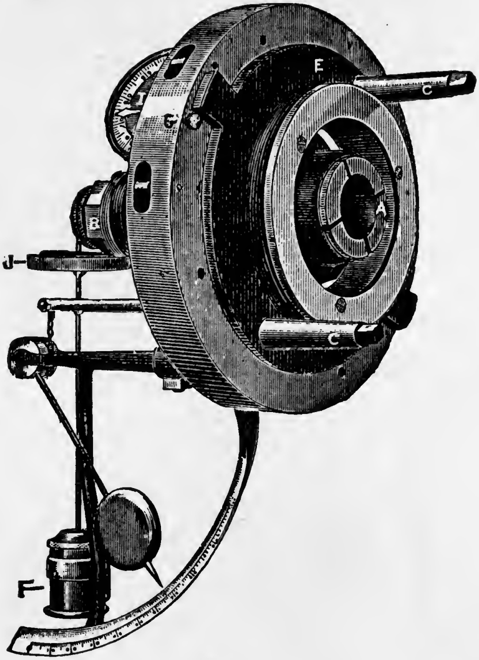

FIG. 97.

The Emerson Power Scale.—This instrument is made to go on a belt-driven shaft next to the loose-belt pulley. The two studs *CC,* shown in Figs. 96 and 97, engage with the spokes of the loose pulley and cause the plate *E* to run with it. *E* revolves freely except for the bolt *G* which may be pushed out to engage with it by means of the slide *H*. When this is done the rim of the apparatus is made to turn and through the system of levers, shown in Fig. 96, this motion is transmitted to the shaft. These levers are a part of a weighing mechanism, very similar in construction to that contained in standard platform scales. When the shaft is in operation the torque is registered by the weighing mechanism. This, multiplied by the revolutions per minute and the constant of the instrument, gives the power.

The revolutions of the shaft are registered on the dial shown in Fig. 96.

As used in the laboratory in connection with an explosion engine, the apparatus is not in any way secured to the line of shafting. The line of shafting projects a short distance into the shaft of the power scale to act as a support and a guide. The shaft of the power scale ends in a sleeve that fits over the end of the line shaft.

The power is worked out by knowing the radius of the first transmission of the power and the revolutions. For the special apparatus in the laboratory it is as follows:

Circumference of point of application of power..	6 feet.
Revolutions	a
Weight read on scale........................	b

$$\frac{6 \times a \times b}{33000} = \frac{\text{Circ.} \times \text{Wt.} \times \text{Rev.}}{33000} = \text{I. H. P.}$$

The table below gives the capacity at 100 revolutions:

Hole, Inches.	Greatest Diameter.	Weight.	Capacity.	Circle of Graduation.
No. 2	26 inches.	250 lbs.	27 h. p.	6 ft.

An allowance must be made for the reading of the power scale when running with no resistance at each number of revolutions. This must be tested and a table made. The net pressure is the difference between that under power and light.

Torsionmeters.—When power is transmitted through an elastic shaft, within its elastic limit, the shaft is twisted through an angle, the amount of such distortion depending on the size of the shaft and the power transmitted. In any given shaft there is a fixed proportion between the amount of twist and the applied moment of rotation. Having calibrated the shaft, it remains to provide an instrument to measure the amount of its distortion when running. From this and the revolutions of the shaft the power is calculated.

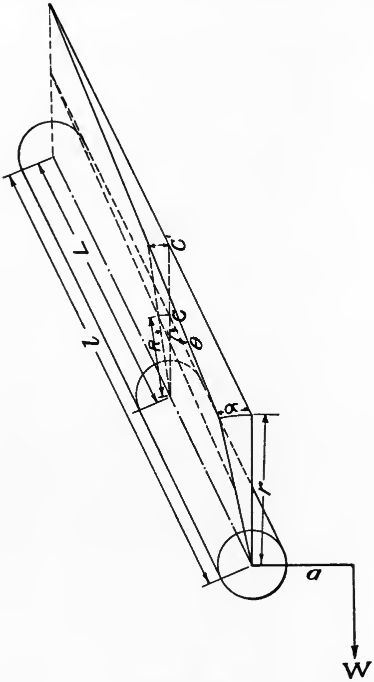

FIG. 98.

Calibration of Shafting.—Previous to being placed in position in the ship, the shaft should be calibrated. This should be done by coupling the various lengths together, including the length over which the torsion is to be measured, placing it in bearings and proceeding in the following manner: One end is clamped rigidly so that it cannot turn, and to the other is attached a lever to the end of which weights are attached. A pointer is also attached to the free end of the shaft, about 6 or 8 feet in length and stiff enough so that it will not bend under its own weight. A paper scale is placed under the end of the pointer to register its movement in inches.

Referring to Fig. 98 let

c = movement of the pointer in inches under the influence of the added weight W, applied to arm a.
r = length of pointer in inches.
l = length of shaft being twisted, exclusive of couplings.
L = length of portion of shaft on which torsionmeter is applied.
R = radius of arc on which torsionmeter readings are taken.
C = reading of torsionmeter corresponding to movement of pointer c.

Extending the lines of the figure as shown, we have

$$\frac{c}{C^1}=\frac{l}{L} \text{ and } \frac{C^1}{C}=\frac{r}{R},$$

from which

$$\frac{C}{c}=\frac{L\times R}{l\times r},\quad C=c\times\frac{L}{l}\times\frac{R}{r}$$

and

$$\frac{C}{R}=\frac{c}{r}\times\frac{L}{l}=\phi,$$

the angle of torsion of length L of the shaft, expressed in circular measure.

The moment M, caused by the pull W on an arm of length $a = W\times a$. From the results of the calibration experiments, a curve is constructed, the ordinates giving the values of M *in foot pounds* and the abscissæ the corresponding readings of the torsionmeter. From this curve the moment, corresponding to any reading of the torsionmeter, is obtained.

The shaft horse power (S. H. P.) is equal to

$$\frac{2\times\pi\times M\times \text{Revs.}}{33000}=\frac{M\times\text{Revs.}}{5252}.$$

Horse Power from the Torsionmeter Without Calibration of Shafting.—From applied mechanics we have the angle of torsion for a shaft within the elastic limit,

$\phi = \frac{M \times L}{E \times I \times d} = \frac{\pi\theta}{360}$, where θ = the angle of torsion measured in degrees.

M = the twisting moment in inch pounds.

L = length of shaft in inches.

E = modulus of elasticity of the material of the shaft.

d = diameter of shaft in inches.

I = moment of inertia of the section about the axis $= \frac{\pi}{16} \times d^3$ for solid shafts or $\frac{\pi}{16}\left(\frac{d^4 - d_1{}^4}{d}\right)$ where d = outside diameter and d_1 = inside diameter of shaft, both in inches.

It is more convenient to express M in foot pounds. Making this change, we have

$$M = \frac{E \times I \times d \times \pi \times \theta}{360 \times 12 \times L} = \frac{\pi^2}{16} \times \frac{E \times d^4}{360 \times 12 \times L} \times \theta$$

for solid shafts, or

$$M = \frac{\pi^2}{16} \times \frac{E \times (d^4 - d_1{}^4)}{360 \times 12 \times L} \times \theta$$

for hollow shafts.

Substituting these values of M in the above expression for horse power, we have for solid shafts

$$\text{S. H. P.} = \frac{2 \times \pi \times M \times \text{Revs.}}{33000} = \frac{2 \times \pi^3 \times E \times d^4 \times \theta \times \text{Revs.}}{360 \times 16 \times 12 \times 33000 \times L}.$$

For high-grade steel, such as is used for the shafting of naval vessels, E is approximately 11,750,000.

Substituting this and evaluting, we have

$$\text{S. H. P.} = \frac{d^4 \times \theta \times \text{Revs.}}{3.13 \times L}$$

for solid shafts and similarly

$$\text{S. H. P.} = \frac{(d^4 - d_1{}^4) \times \theta \times \text{Revs.}}{3.13 \times L}$$

for hollow shafts, the terms being named as before.

In any particular installation of a torsion meter, these formulæ are applicable, the expression in each case taking the form

$$\text{S. H. P.} = K \times C \times \text{Revs.},$$

where K is a constant and C is the torsionmeter reading. This expression is general and applies in all cases where C is proportionate to the angle of twist, whether it be measured in degrees, or in linear units on an arc of given radius.

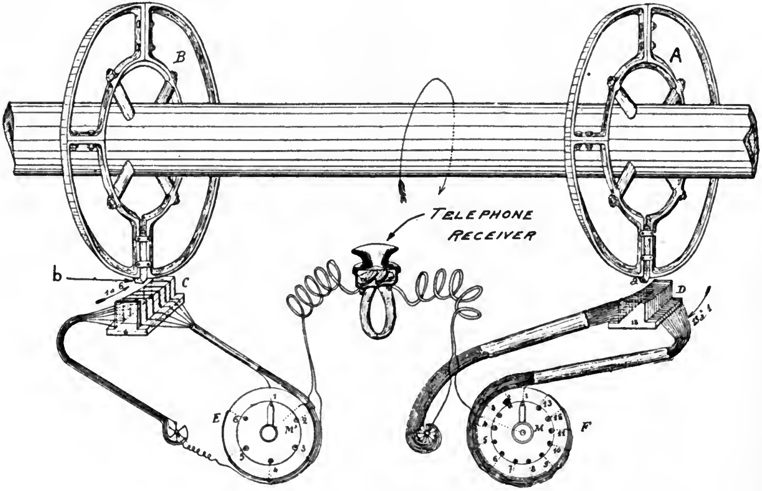

FIG. 99.

Results obtained by calculation from the modulus of elasticity approximate closely to those obtained by calibration, their accuracy depending of course on the correctness of the figure used for the modulus.

The Navy Department requires the shafting of its vessels to be calibrated before installation. This is more necessary with hollow than with solid shafting, since for the formula for hollow shafting to be correct, the hole must be centered with exactness.

The Denny-Johnson Torsiometer.—Two bronze wheels, *A* and *B,* Fig. 99, are placed on the shaft at a definite and known distance apart, the distance being as great as possible. On each of these wheels a permanent magnet, with a sharp chisel-shaped edge is fixed radially, at the periphery of the wheel, and with the sharp edge parallel to the shaft. Under one of these wheels, soft iron sector cores are placed, wound with a series of coils of very thin wire, so fine indeed that each coil, with its dividing wall in one of the sectors, only occupies a space of 0.02 inch. Under the other wheel similar sectors, or *inductors,* as they are called, are fitted, but in this case the coils are further apart, viz., 0.2 inch.

In the lower part of Fig. 99 is shown the arrangement of recording boxes. For each shaft this consists of two circles, fitted with contact studs and movable contact arms; the one marked E is connected with the inductor at the wheel next the propeller and has six contacts. That is to say, each of the six coils, spaced 0.2 inch apart, is connected to one of the studs. The other one, marked F, has thirteen contact studs, connected to the thirteen coils, spaced 0.02 inch apart, on the inductor at the turbine end of the shaft.

The magnets are so placed that when passing the inductors, currents of opposite potentiality are induced. These are carried to a telephone receiver, and when either magnet passes an inductor a click is heard. If they pass simultaneously, the two currents tend to neutralize one another and the single click is greatly diminished, or vanishes altogether. There are two resistance boxes, not shown in the figure, for throwing into series with the differential windings of the telephone receiver and the two inductor circuits, which circuits must be accurately balanced before absolute silence can be obtained in the receiver.

To take a reading after the instrument is once set, and the resistance of the two telephone circuits is adjusted, all that is necessary is to turn the movable arm on scale F round the various studs until there is silence in the telephone, when the amount of torsion is immediately read off the scale. If no such position be found, it means that the shaft is being twisted more than is covered by this scale; the arm E is then turned to the first contact, and the arm F is again swept round the circuits. If silence be still not obtained, the arm E is turned to the second contact, and so on, the combined range of the scales being altogether 1.24 inches, which is more than sufficient to measure the maximum torque usually obtained. From torsion experiments on the shaft, made previous to its being fitted in the ship, the factor by which this reading is to be multiplied is obtained, and the power gotten by a simple multiplication.

The instrument is made for one, two, three, and four shafts; a group of scales and resistances, as described above, being required for each shaft, all mounted on one panel. By means of the contact arms and studs the various shafts are thrown into circuit with their receivers and readings taken from all the shafts in a very short time. The sound in the receiver at usual revolutions is so distinct that even an untrained observer, after a few minutes' practice, can get perfectly accurate results, and powers transmitted can be obtained from moment to moment. The instruments are mounted in a room in some quiet part of the ship where the observer will be free from interruption.

Instrument for Low Speeds.—The above instrument is not suited for very low revolutions, as the induced current becomes too weak to make a distinct sound in the telephone; but it is suitable down to about 100 revolutions per minute. For lower revolutions a somewhat similar arrangement has been used in which the two wheels keyed on the shaft were on insulating material, and each had a contact point arranged at its periphery in such manner that the point made a momentary contact with a metallic tongue or brush once in each revolution. The contact points were connected to the shaft, and the metal brushes to a battery and a telephone receiver. The method adopted was to first adjust the brushes so that both made contact with the points simultaneously when the shaft was revolving, but transmitting no power. When transmitting power the shaft was of course subject to torsion and thus the brushes were put out of simultaneous contact. One of the brushes was then moved around its disc concentrically, until simultaneous contact was once more established. The amount of this shift gave a measure of the torque on the shaft, and to ascertain the correct amount of this shift the telephone receiver was placed to the ear, no sound being heard except when both brushes were in contact with the respective contact points.

This apparatus, though more simple than that above described, is not applicable on shafting running at high speed, since it is impossible to obtain the make and break with certainty. Experiments

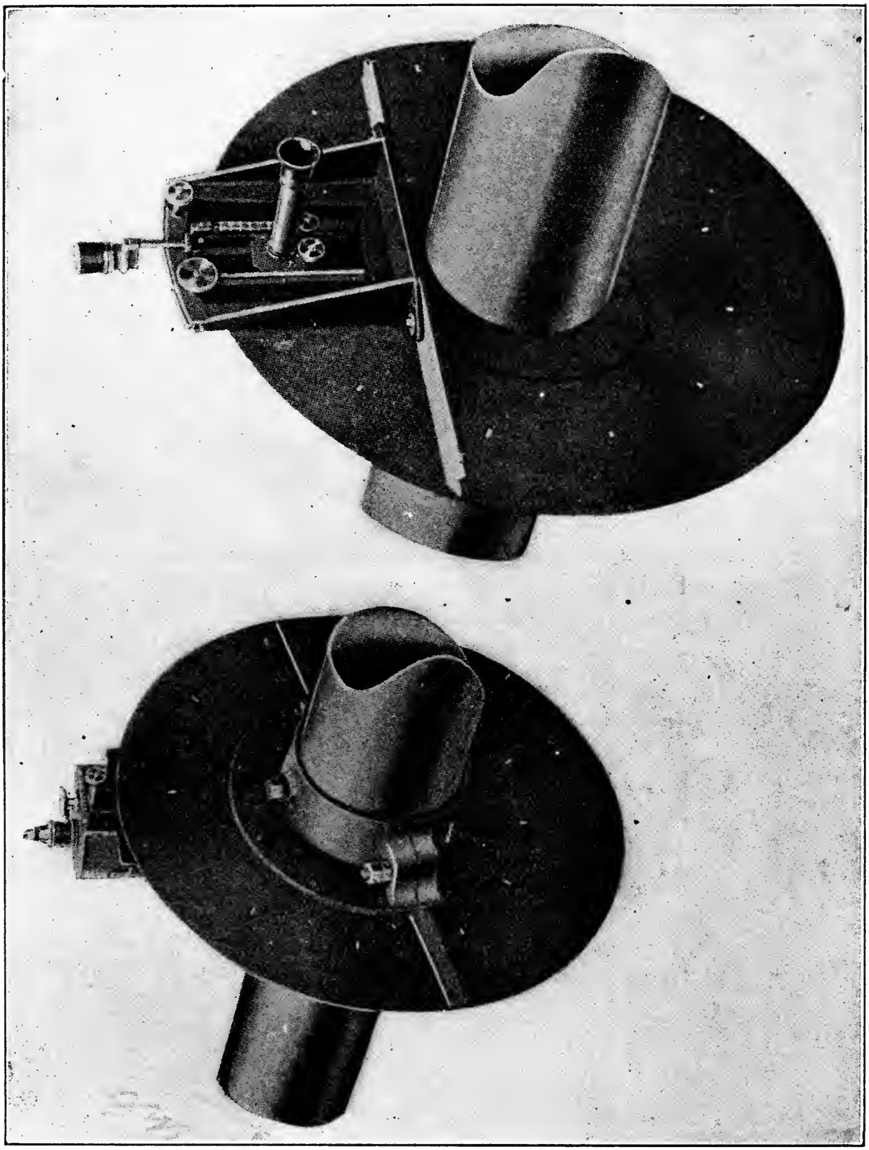

FIG. 100.

with it on high speed shafting led to the perfection of the Torsiometer, above described.

The Denny-Johnson Torsiometer is largely used on the earlier turbine-driven vessels. It is accurate and satisfactory when care is taken with its installation. The numerous electrical connections sometimes give trouble, chiefly through short circuiting with salt water.

The Bevis-Gibson Flashlight Torsionmeter.—Referring to Fig. 100, the shaft has two discs clamped on it in positions as far apart as practicable. These discs are each pierced, around a circumference of the same radius, with twelve radial slots. Behind each of the discs there is a fixed support above the shaft. On one of these a lamp is placed and on the other there is an eye piece, with shutter, mounted on a movable "finder." Both lamp and eye piece are at the same distance from the center of the shaft.

When the shaft is at rest, with the finder in the zero position, the lamp, similarly placed slots in the two discs, and the eye piece, are in line, and the light from the lamp is seen by the observer through the eye piece. If the shaft were turned rapidly, without torsion, the light would be seen as a continuous ray.

When the shaft is transmitting power, the relative position of the two discs is changed, and the lamp and the eye piece are no longer in line with similarly placed slots, so that the ray is cut off. To find it again it is necessary to move the finder along a graduated scale, fitted with a vernier for close reading. The amount of movement required to bring the ray again into coincidence is proportionate to the angle of torque.

Fig. 101 shows the principle of operation and the method of picking up the deflected ray of light by moving the finder.

The flash light torsionmeter is free from complicated mechanical parts, which in some other torsionmeters introduce error through lost motion. There may be considerable variation in the readings, due to the breadth of the beam of light as seen through the eye piece, but in the hands of a careful observer very accurate results can be obtained with it. The edge of the beam of light should be caught, first on one side, then on the other, the mean of the two giving the desired reading.

The instrument does not give a permanent record and it is not always possible to find for it the amount of space in the fore and aft direction that it requires.

The Föttinger Torsionmeter.—Fig. 102 shows the working parts of this instrument. The ring *B* with two arms and the ring *D* at the after end of the steel sleeve *C* are both clamped firmly to the shaft. On the forward end of the sleeve is a ring *A* similar to *B*. There is a clearance between this ring and the shaft, and it is centered on *B* by means of radial centering rods having knife edges on each end. The sleeve *C* and ring *A* act as a rigid mass and turn with that part of the shaft to which *D* is clamped. When a torsional stress is applied to the shaft the ring *B* twists relative to *A*. Through a flexible link *E*, a bell crank *H* pivoted on *A*, and a link *J* connected to the magnalium ring *N* which floats on the sleeve *C*, this relative twist is magnified and changed to a fore-and-aft motion. A shoe *P* is brought into contact with a flange on the magnalium ring, and the fore-and-aft motion of the ring is again magnified and indicated by a pointer *Q* on a scale *T*.

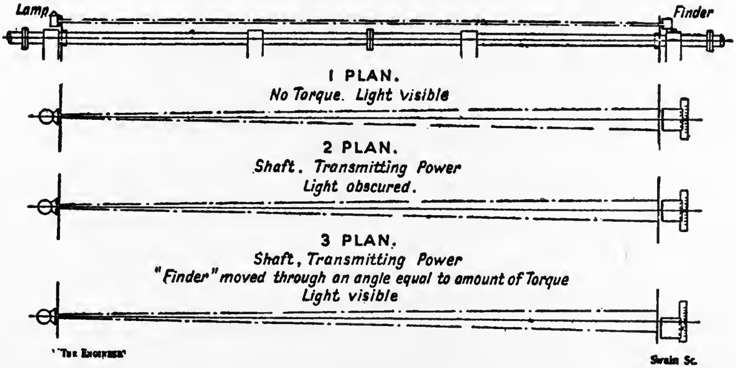

FIG. 101.

The constant for the machine is found by calibrating the shaft and torsionmeter in the shop previous to installation in the ship. The after end of the shaft is bolted to a fixed flange. The forward end rests in a roller bearing and on the forward flange is bolted a double lever. A known twisting moment is applied to this lever

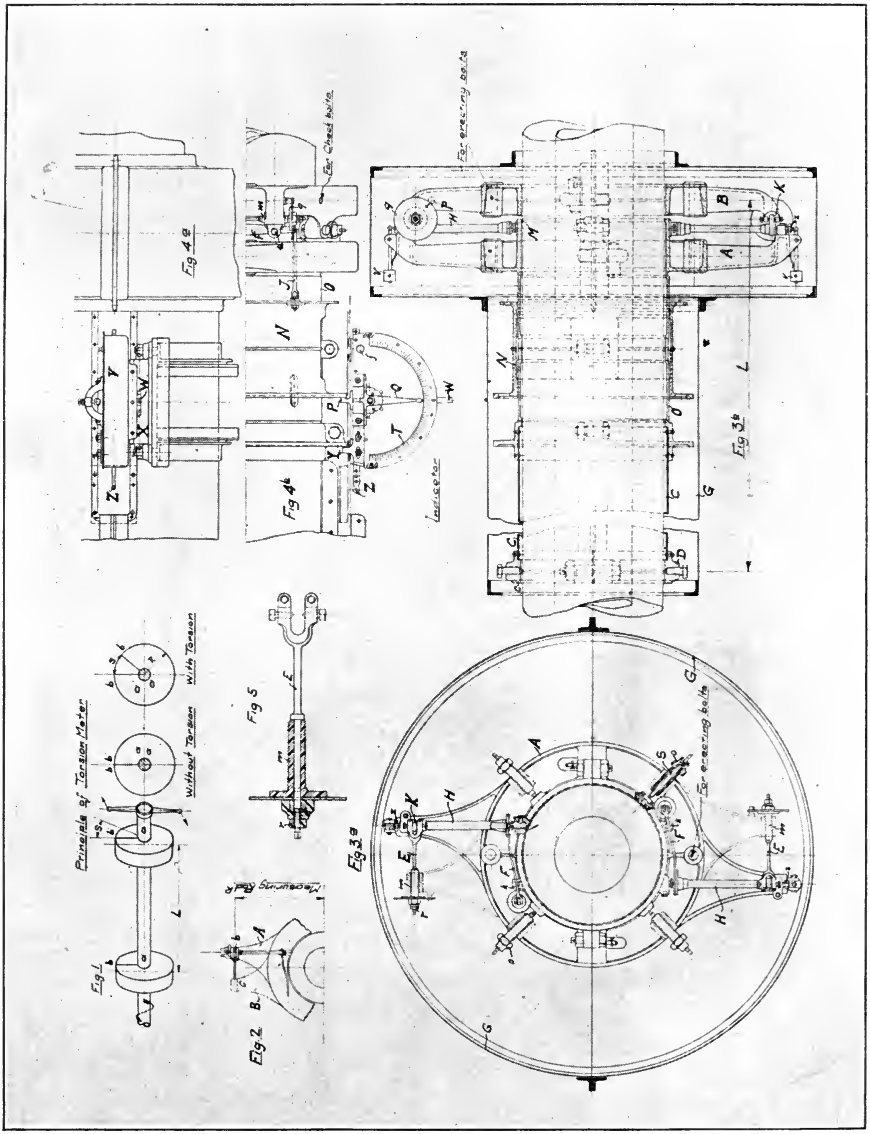
Principle of Torsion Meter
Fig. 1
Without Torsion
With Torsion
Fig. 2
Measuring Rod R
Fig 3a
Fig 3b
Fig 4a
Fig 4b
Fig 5
Indicator
For erecting bolts
For Check bolts

FIG. 102.

and the corresponding torsionmeter readings are observed. From the slope of the line plotted between torsionmeter readings and torque a constant is obtained such that

$$\text{H. P.} = C \times R \times F,$$

in which H. P. = shaft horse power, R = revolutions of the shaft per minute, and F = torsionmeter reading.

This torsionmeter requires but little space and gives a direct indication of the torque. A later form is designed to give a permanent record. It is open to the objection that the numerous levers and joints introduce lost motion with corresponding errors of observation.

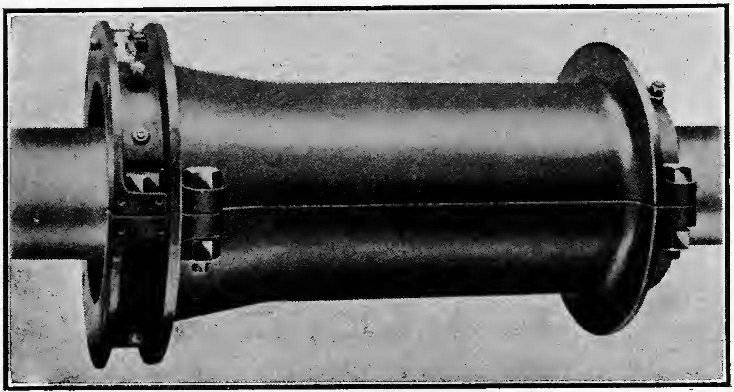

FIG. 103.—Torsionmeter Mounted Complete on Shaft.

The Hopkinson-Thring Torsionmeter.—The principal of this apparatus is a differential one, and consists in the observation of the twist between two points on the shaft by means of two beams of light projected on to a scale from a fixed and a movable mirror. The beam projected on the scale by the fixed mirror is taken as the zero point, while the beam projected by the movable mirror indicates the amount of torque on the shaft. Both mirrors revolve with the shaft, but even at moderate speeds the reflections appear as continuous lines of light across the scale.

The torsionmeter is shown in Fig. 103, mounted complete on a shaft, and the scale box in Fig. 104, while a diagrammatic arrangement of the complete apparatus is shown in end elevation and plan in Figs. 105 and 106 respectively. A collar *A*, clamped to the shaft of which the torque has to be measured, is provided with a flange projecting at right angles to the shaft and an extension (Fig. 106.)

A sleeve *B* (Fig. 106), provided with a similar flange and extension at one end, is clamped at its further end on to the shaft in such a manner that its flange is close to that on the collar *A*, while its entension overlaps that of the collar *A*, on which it is supported to keep it concentric. Both the collar and sleeve are quite rigid, and it is obvious that when the shaft is twisted by the transmission of power, the flange on the sleeve *B* will move relatively to that on the collar *A*, the movement being equal to that between the two parts of the shaft on which these fittings are clamped. This movement is made visible by a system of torque mirrors mounted between the two flanges, which reflects a beam of light, projected from a lantern, on to a scale divided in a suitable manner on ground glass.

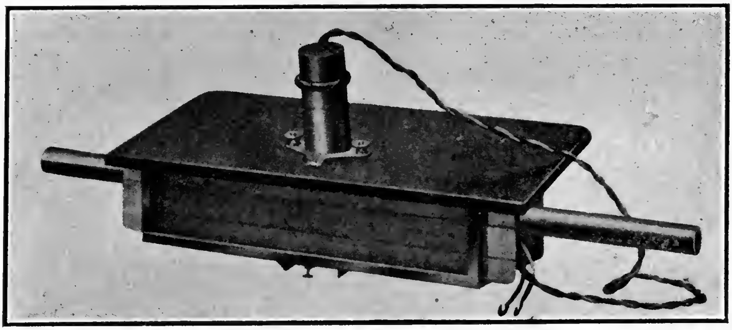

FIG. 104.—Scale Box with Lamp, for Torsionmeter.

This system of torque mirrors consists of a mounting, pivoted top and bottom on one or other of the flanges, in which two mirrors are arranged back to back. This mounting is provided with an arm, the end of which is connected by a flat spring to an adjustable stop on the other flange. Any relative movement of the two flanges

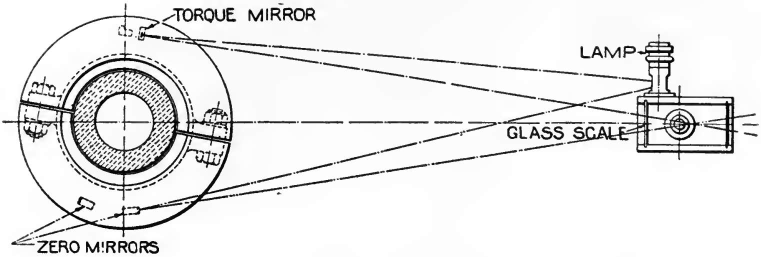

FIG. 105.

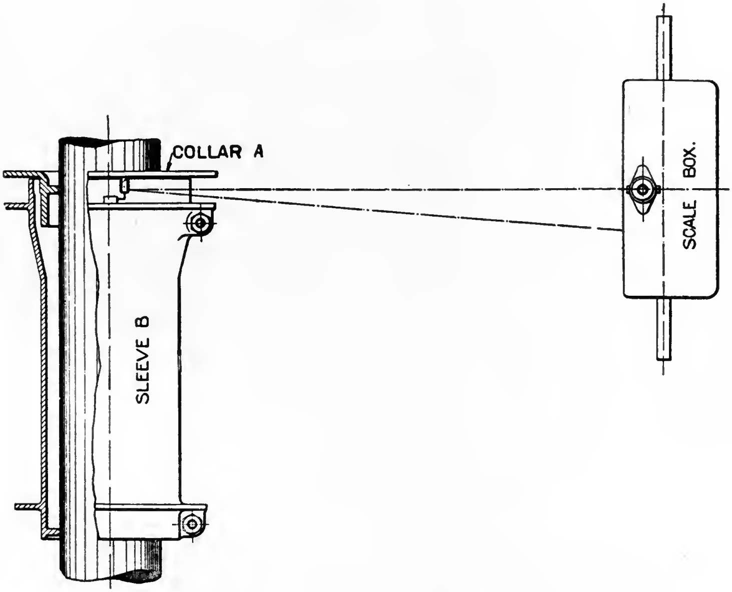

FIG. 106

will turn the torque mirror and thereby cause the beam of light to move on the scale, the deflection produced being directly proportional to the torque applied to the shaft. Hence, if the rigidity of the material and the number of revolutions per minute are known, the H. P. transmitted can be readily calculated.

With the arrangement described, a reflection will be received from each mirror at every half revolution of the shaft; but where the torque varies during a revolution (as with reciprocating engines), a second system of mirrors may be arranged at right angles to the first system, so that four readings can be taken during one revolution; or, if two scales are used, eight readings can be taken.

Fig. 105 shows how the beam of light reflected by the mirror when in its highest position passes through the upper part of the scale; while the second reflection will occur when the mirror is in the position occupied by the zero mirror, the beam of light passing through the lower part of the scale. The position of the torque mirror in Fig. 106 is such that the reflected beam strikes the scale to the right of the zero line, but when the shaft has made a further half revolution, the reflected beam from the other mirror will strike the scale to the left of the zero line. Obviously the deflection on both sides should be equal.

The fixed mirror is attached to one of the flanges (in Fig. 106 to the flange of the sleeve *B*). This must be adjusted so that the beam of light reflected from it is received at the same point on the scale as those from the movable mirrors when there is no torque on the shaft. To facilitate the erection and adjustment of the apparatus, the box containing the scale and carrying the lamp is fitted with trunnions, so that it can be inclined as required.

If the position of the apparatus becomes altered relatively to the scale owing to the warming up of the shaft or from other causes, this is indicated immediately to the observer by an alteration in the position of the zero as reflected by the fixed mirror. Hence, the zero can be adjusted by moving the scale so that its zero coincides with the reflection from the fixed mirror. It will be obvious that it is not necessary to move the scale, as the mean of the two readings will be the same. It will readily be understood that a movement of the torque mirrors can only occur through a relative movement of the two flanges, so that vibration of the shaft or of the ship will not influence the readings.

The constant of the instrument, viz., the factor which, when multiplied or divided into the product of the torsionmeter reading and the revolutions, gives the horse power, may be calculated within 2 or 3 per cent, if the section of shaft within the instrument is uniform. A direct calibration of the shaft with the instrument in position is recommended before the former is put into the ship. This is effected readily by applying a known twisting couple.

This instrument is inexpensive and the absence of complication makes it fairly accurate, but there is no permanent record. Considerable transverse space is required for the scales, which must be darkened to observe the readings. It is widely used on vessels of the British Navy.

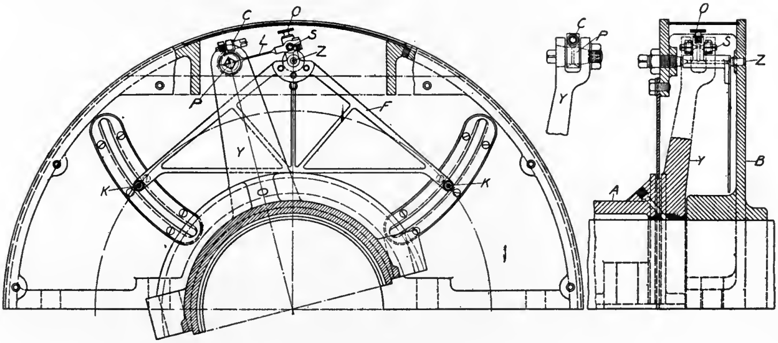

FIG. 107.

The Metten Torsionmeter.—This instrument was designed by Chief Engineer Metten of the Wm. Cramp & Sons Ship and Engine Building Company of Philadelphia. The principal parts are shown in Fig. 107. *A* is a sleeve, fitting loosely on the shaft at the end shown, and rigidly attached to the shaft at the opposite end. This sleeve is made in halves for convenience in assembling. Two extension arms, *Y,* are attached, forming part of the sleeve. One of these is for attaching to the mechanism, while the other serves merely to balance the apparatus. *B* is a disc securely fixed to the shaft, close to the arm *Y,* as shown. Pivoted on this disc, at *Z,* is a very light frame, *F,* carrying two knives, *K,* for making the record. At the apex of frame *F* is a crank pin, *S,* with flat connecting link, *L,* to a pin, *P,* at the upper end of *Y.* The pin *P* is eccentric and can be rotated while making the zero adjustment of the instrument. The clamp, *C,* serves to hold *P* rigidly in position after the adjustment is made. *O* is a grease cup for lubricating the pivot bearings at *Z.*

When the shaft is transmitting power, *P* and *Y* tend to rotate slightly with reference to each other. The frame, *F,* is caused to swing about *Z,* the proportions of the frame being such that the knives, *K,* are each given a movement fifteen times that of the pin *S.* One knife moves from the zero line toward the center of the shaft, while the other moves outward. A strip of paper is held in a stationary clamp in front of the disc, so that the knives in passing make cuts in the edge of the paper. The distance between these cuts will be thirty times the linear movement of *S,* and is a direct measure of the torque in shaft.

The constant of the instrument is determined in a manner similar to that used for other torsionmeters.

Fig. 108 shows the table for holding the paper on which records are made with this torsionmeter. The table proper, 3, is on a frame, II, secured by a hinge 5, to the fixed base I. The clamp, 8, holds the paper firmly with its edge parallel to the disc of torsionmeter. The set screw, 6, enables the distance of edge of paper from face of disc to be adjusted, without altering the setting of the paper in the clamp.

Torsionmeters Compared with the Indicator.—The shaft horse power, obtained by the use of the torsionmeter, can be compared with the indicated horse power by multiplying the latter by a factor representing the efficiency of the engine. The factor 0.92 is used in ordinary calculations. There is no means of measuring directly the indicated horse power of a turbine, though an approximate result can be obtained by observing the fall in pressure through successive expansions, by means of gages attached to the turbine stages, and taking corresponding observations to determine the quality of the steam. The results of such observations are entered on a temperature-entropy chart, thus completing a diagram representing the cycle of heat operations in the turbine. This work requires considerable time and labor.

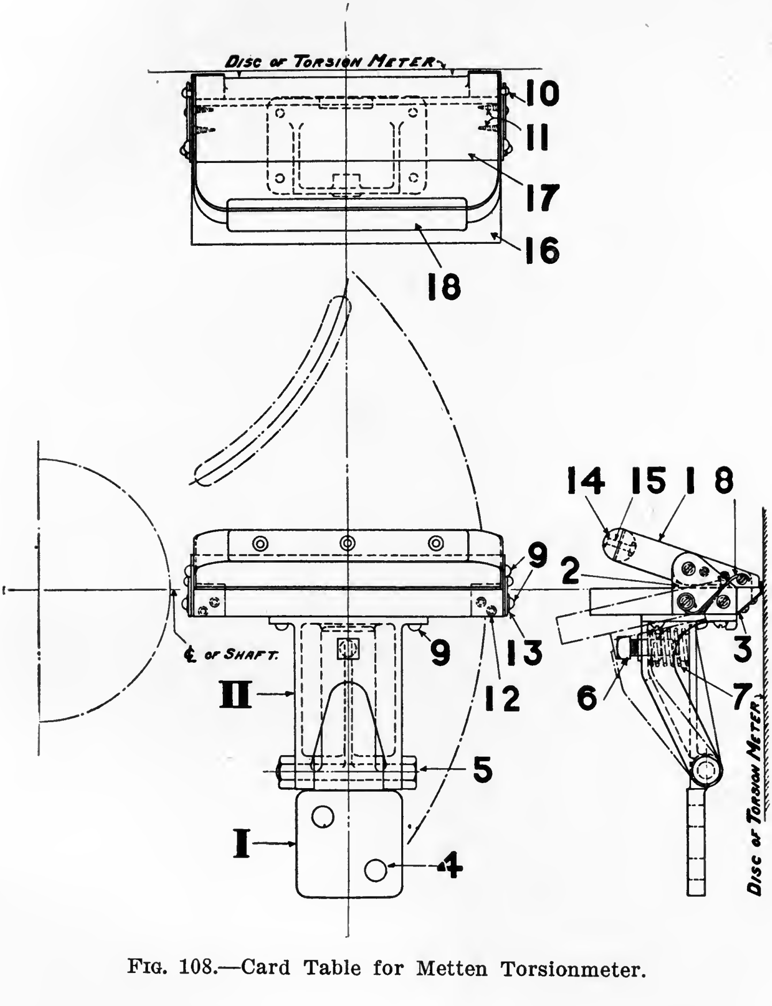

FIG. 108.—Card Table for Metten Torsionmeter.

Torsion Readings for Reciprocating Engines.—Perfect results can be obtained with the torsionmeter only where the turning moment is uniform, as it is in turbine driven machinery. In a reciprocating engine, due to the irregular twisting moment, it is difficult of application, though good results have been obtained by fitting as many as six sets of instruments at regular intervals around the periphery of the discs placed on shafts. By taking the mean of the six readings, fairly accurate results are obtained. The apparatus has been thus fitted for experimental purposes on a few vessels, and the accuracy of the torsionmeter thus demonstrated. The arrangement is too cumbersome for regular application on a vessel driven by reciprocating engines.

Curves of Chest Pressures and Horse Power.—For a vessel in commission curves are sometimes constructed showing the observed shaft horse power for given values of the steam-chest pressure and vacuum. Such curves cannot be depended upon absolutely for estimating horse power since the *revolutions* will vary, depending upon conditions of the ship's bottom and the surface of propellers, state of the sea, etc. Such curves are of great value, however, in indicating the condition of the turbine blading. Any considerable injury to the blading would be marked by a corresponding decrease in efficiency which would be indicated on examination of the curves.

CHAPTER VIII.

TESTING MATERIALS OF CONSTRUCTION.

Strength of Materials.—In all engineering work of whatever character, the question of the strength of the materials employed is of great importance. In designing the machinery of a war vessel the naval engineer is confronted with the necessity of reducing weights as much as possible, but he must, while doing this, make the machinery of sufficient strength to stand any load that may be put upon it in an emergency. The materials employed must be of the highest grade as regards strength, and of such uniform character as to permit the reduction of the factor of safety as much as possible. Specifications for material are closely drawn and much of the work of the engineer lies in the inspection of such material to see that it conforms to specifications.

Stress is the uniformly distributed force applied to a material. It is of three different kinds: *longitudinal,* divided into *tension* and *compression; transverse,* divided into *shearing* and *bending;* and, *twisting* or *torsional.* Stress is measured by the number of pounds of load per square inch of cross section.

Strain is the distortion of a material resulting from the application of stress and follows in its classification the different kinds of stress above enumerated. In elastic material it is proportional to the stress.

Elasticity is that property of a material that causes it to return to its original form when the forces acting upon it have been removed. This property is possessed to a limited extent only, by most materials, and if the *deformation,* or *strain,* exceeds a certain amount, the material will not again regain its original form.

Elastic Limit is the critical point beyond which the material cannot be strained without a permanent distortion or *set.* This point, when gradually approached, in most materials is indicated by an increase in the increment of strain due to a constant increment of stress.

Rigidity or Stiffness is the property by means of which bodies resist change of form.

Coefficient of Ultimate Strength is the number of pounds per square inch required for rupture, and is obtained by calculation from the original area and the maximum load.

The Coefficient of Strength at the Elastic Limit is the number of pounds per square inch acting on the material when the elastic limit has been reached.

Percentage of Elongation.—The *elongation* is the total relative strain; or the amount that a piece stretches before rupture. It is usually expressed as a percentage of the original length of the test piece.

Reduction of Area of Cross Section.—After fracture of a test piece, the area at the point of fracture is measured and the reduction in area is expressed as a percentage of the original area.

Modulus of Elasticity.—This is the number expressing the ratio of the stress per square inch to the deformation per inch accompanying that stress, within the elastic limit. It is denoted by E.

Modulus of Resilience.—This is the amount of work, in foot pounds, done in deforming a cubic inch of the specimen up to elastic limit. It is equal to one-half the stress per square inch at elastic limit multiplied by the total elongation in feet per inch of length up to elastic limit; or to the square of the stress at elastic limit divided by twice the value of E.

Breaking Load and Maximum Load.—As the load on a test piece under tension is gradually increased, the piece will be seen to visibly diminish in diameter, this diminution being at first uniformly distributed along the whole length of the piece. When the *maximum load* is reached, this reduction in area assumes a maximum amount at one point, where a distinct thinning takes place. The area then becomes rapidly reduced at this point, and unless the total load is reduced, the load per unit cross section becomes greatly increased, and the piece will no longer be able to support the *maximum load*. By careful manipulation, it is possible to so reduce the load that the scale beam is kept balanced up to the point of actual rupture, where the total load is called the *breaking load*.

The Safe Load must always be less than the load at the elastic limit. It is usually taken as a certain fraction of the ultimate or breaking load.

The Factor of Safety is the ratio of breaking load to safe load.

The Strain Diagram.—In testing a piece of material, if we lay off the strain on the horizontal axis, to a scale that is readily appreciable to the eye, and the corresponding loads as ordinates to a convenient scale, as 3000 or 5000 pounds per square inch, a curve drawn through the points thus plotted gives the *strain diagram.* Such a curve is drawn autographically on the testing machine and is shown in Fig. 109. The strain is represented by distances parallel to *OX,* the load as a certain number of pounds per inch parallel to *OY*. From *O* to *A* this diagram is a straight line, showing that the strain is proportional to the stress. At *A* there is a sudden increase in strain without a marked increase in load, shown by the curved line from *A* to *B*. The point *A* is often spoken of as the *yield point,*

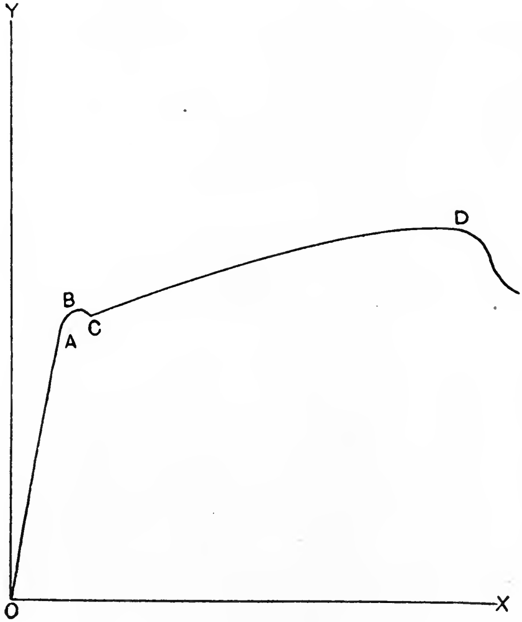

FIG. 109.

and marks the elastic limit. In curves for ductile material, taken autographically, this sudden increase of strain is usually accompanied by an apparent reduction of stress, as shown by the curve from *B* to *C*. This is probably due to the fact that the increase in strain is so great that the scale beam falls until the stress is increased. The curve then continues to rise, reaching its maximum height at *D*, which indicates the point of *maximum load*. From *D* the load is reduced to *E*, which indicates the *breaking load*.

The Stress-Strain Diagram.—This diagram is sometimes erroneously called the *stress-strain diagram*. The ordinates do not indicate *stress*, but *load*. By observing and plotting the area of cross section of the test piece and dividing the load by it, the amount of stress can be calculated and the true stress-strain diagram can be thus constructed.

Testing Machines.

Machines for the testing of materials may be said, in general, to consist of (1) a power system, by which stress is applied to the specimen, and (2) a weighing system, by which the stress applied is measured. The power system may consist of a train of gears or an hydraulic cylinder, either of which may be operated by power or by hand. The weighing system usually consists of a system of levers and a poise by which the stress is balanced as on an ordinary pair of scales.

The form of testing machine in general use is that in which the load is applied through a train of gears and screws operated by power, and the stress is measured by a system of levers. It is of the vertical type, in which the tensional and compressional specimens are held in a vertical position. The vertical screws connecting with the power system operate a movable head, to which the lower end of the tension specimen is connected. The upper end of the specimen is connected to the upper head, which is a part of the weighing system and rigidly connected with the table of the machine, the latter resting in turn on the lever system. In compressional tests the specimen is placed directly between the movable head and the table. For shearing and bending tests the specimen is held between supports resting on the table and the stress is applied as for compressional tests.

Riehlé Screw Power Testing Machines.—Fig. 110 shows a Riehlé testing machine of 100,000 pounds capacity, as installed in the laboratory. It is of the automatic and autographic type and is described by the makers as follows:

The Straining Mechanism.—The top head is supported by two cast-iron columns, which rest on the weighing table. This table in turn rests upon a series of eight hardened steel knife edges in the main levers, these levers resting on steels which are fitted in cast-iron bearings on the cover plate. Beneath this and bolted to it is the cast-iron box, containing the main gears, and to which the bracket supporting the beam and lever stands is attached.

Through holes in the table two pulling screws pass up and reach nearly to the top head, running through two brass nuts in the pulling head, which is raised or lowered according to which direction the screws revolve. In the top head and pulling head are cut rectangular holes, sloping on two sides. For tensile tests, the ends of the specimen are held by hardened steel wedges, or "grips," which fit into these openings in the heads. Owing to their wedge shape, the grips hold the specimen more firmly as the strain on it increases.

In compression tests the specimen is crushed between the two crushing tools, one being attached to the under side of the pulling head, and the other resting centrally on the table.

In bending tests, one V-shaped tool is attached to the lower side of the pulling head, the other two V-shaped tools resting on the table equidistant from the first, and as far from it as the operator wishes. The specimen rests on the two tools placed on the table and is bent or broken by the third tool pressing down upon it. In shearing tests a similar arrangement is used except that in place of the three V-shaped tools, the *shearing tool,* Fig. 111, is employed. The block which carries the knives and specimen rests on the table of the testing machine, and the pulling head, carrying a crushing tool, forces the upper knife through the specimen. The lower block is cast iron, with a V-groove, in which the specimen is placed. The two lower knives are exactly one inch apart and are held in the block with a wedge, by which they are brought to the correct position. The upper knife, which is movable and guided by the block, is one inch in width so that it just fills the space between the two lower knives, as it is forced through the specimen.

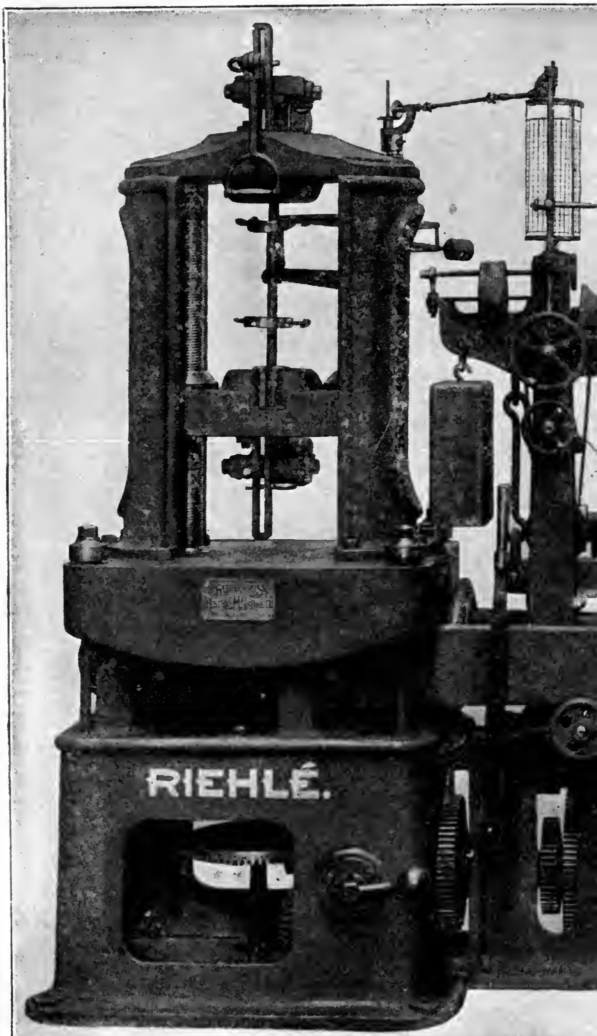
RIEHLÉ.

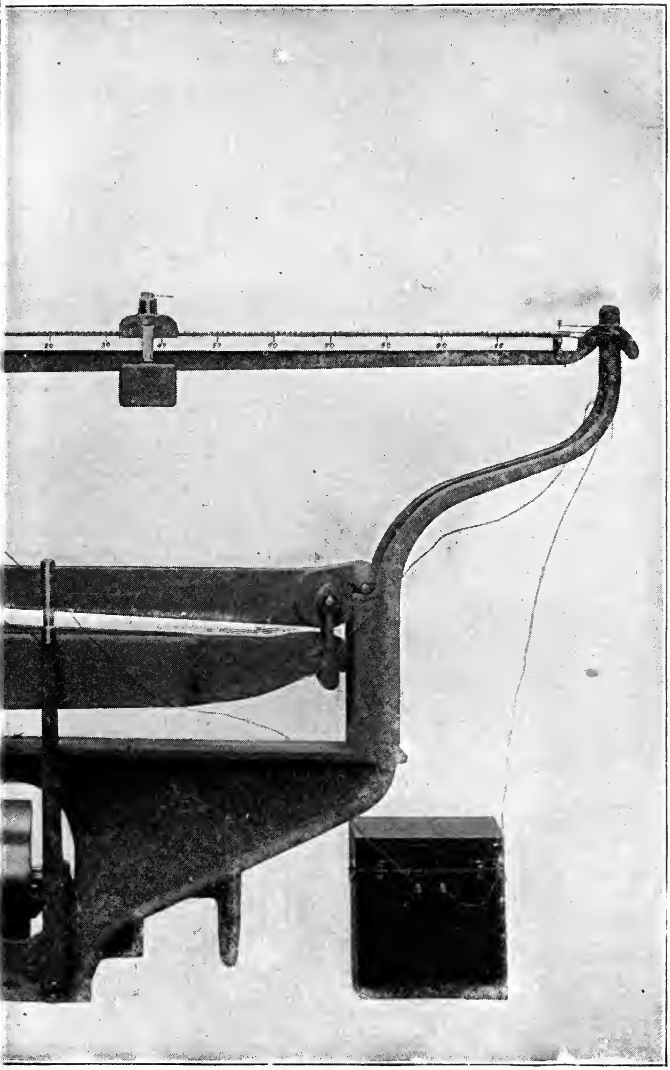

110.

The table is kept from jumping by the recoil bolts which pass through its four corners, running up from the cover plate, and are secured by nuts with thick rubber washers, which serve to take up the shock occasioned by the breaking of large specimens.

The Weighing Apparatus.—The table rests wholly upon the main levers, the recoil bolts passing through it loosely, and any pressure on it is transmitted directly through the levers to the beam. All contacts, by which the load is transmitted to the beam, are in the form of hardened steel surfaces resting on knife edges, by which the friction is eliminated. A heavy weight hanging at the back end of the beam serves to counterbalance the weight of the other end, and a counterpoise above this, with screw and hand wheel for adjustment, permits the balancing of the beam when the poise is at zero.

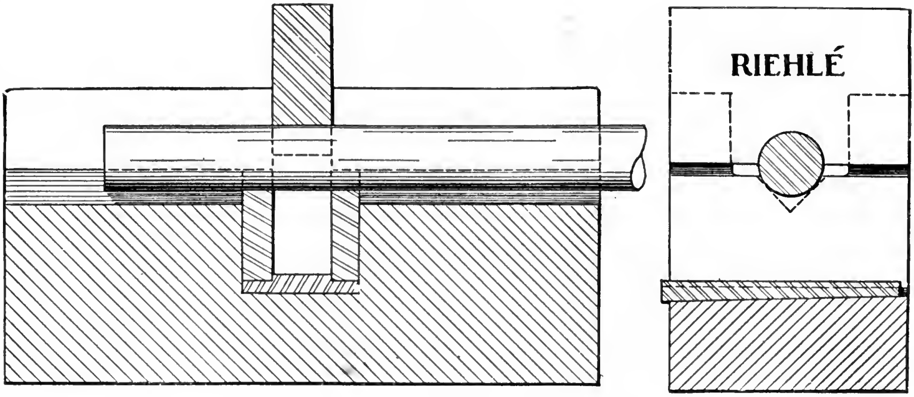

FIG. 111.

When making a test, it is desirable to have the weight registered on the beam simultaneously with the increase of the load on the specimen, the equipoise of the beam being maintained as nearly as possible. The poise should be first placed at zero and the beam balanced, then as the load is added the poise should be advanced at such a rate that the beam vibrates freely between the upper and lower bars at the smaller and further end. The load on the specimen is only weighed accurately when the beam is in equipoise. When the beam is against the upper bar the load is greater than the poise indicates, and it is impossible to know just how much greater until the beam is again balanced by the outward movement of the poise.

The Screw and Vernier Beams.—The beam is graduated in 1000 pound marks, but from the dial at the operating end of the beam, subdivisions of 100 pounds and 10 pounds can be read. One revolution of the screw moves the poise forward 1000 pounds.

The poise is attached to a carriage running along the top of the beam on rollers, and is propelled by a screw sunk in the top of the beam. The screw revolving, carries the poise out or back, as the case may be, or the nut can be released from the screw and the poise run back quickly by hand.

The Driving Mechanism.—The two pulling screws pass down through long bearings in the cover plate and to their lower ends are keyed the main gear wheels. Between these gears and the cover plate are ball bearings to take the thrust and reduce friction. Both these wheels are driven by the same pinion on a vertical shaft, which is driven through the large bevel wheel shown in cut. This in turn is driven by a large bevel pinion, which receives its motion through a series of gears from the pulley shaft down in cut. As installed in the laboratory, this pulley is driven by a reversible electric motor.

The lever to right of pulley throws the motor in direct gear for quick speeds. The small hand wheel to left of pulley throws in the back gear, which can only be operated when the lever is vertical, disconnecting the direct gear.

The lever to left of hand wheel operates to give two speeds, and two speeds are given by the tumbling ball lever at base of machine. There are thus seen to be eight speeds for the pulling head, which, for a speed of 200 revolutions per minute for the pulley shaft, are as follows:

Speed per min.	Direct or Back Gear.	Lever.	Tumbling Ball.
$\frac{1}{10}$ inch	Back	Slow	Slow
$\frac{1}{3}$ inch	Back	Fast	Slow
$\frac{1}{2}$ inch	Back	Slow	Fast
$\frac{2}{3}$ inch	Direct	Slow	Slow
$1\frac{2}{3}$ inches	Back	Fast	Fast
2 inches	Direct	Fast	Slow
3 inches	Direct	Slow	Fast
10 inches	Direct	Fast	Fast

The fastest speed is used only for adjustment of the pulling head to the desired position. If speeds slower than 1/10 inch are desired, they can be obtained by stopping the motor and operating the pulley shaft by hand.

The Automatic Apparatus.—On the beam stand of the machine is the attachment for operating the poise automatically. A small belt runs from the hub of the driving pulley. This sheave turns a cast-iron disc which is arranged to give motion to either of a pair of fiber-rimmed wheels placed near the periphery, on opposite sides of the disc. These wheels are on the same spindle which is connected by a belt to the wheel for operating beam screw. A pair of electro-magnets are so placed that when current is turned on one of them, an armature is attracted and one of the fiber-covered wheels is brought against disc. With current on the other magnet the other wheel is brought in contact. The end of beam has electrical contact points, arranged so that when the beam rises the circuit is completed that brings the wheel into action for forcing the poise outward. When the beam falls this contact is broken and the poise remains stationary until the lower electrical contact is made and the other wheel is brought into action, forcing the poise backward. The fiber-covered wheels may be shifted back and forth across the face of the disc, thus giving variation to the speed of the poise.

The Autographic Apparatus.—The extensometer for autographically recording the stretch or compression of a specimen is shown attached to bracket fixed to the back of one of the columns. The arm of extensometer carrying fingers is swung into position for test, and adjusted vertically. The upper finger of extensometer is placed under top spring clamp. The lower finger rests upon bottom spring clamp, and moves with it as specimen stretches. The motion of stretch is converted into circular motion and transferred by gearing and a sliding shaft with universal joints to the paper drum attached to beam stand above beam. The motion as transferred to the paper is multiplied five times. A vertical screw in front of drum carries the pencil attached to nut. This screw has a finer pitch than beam screw to reduce load line on diagram, and moves simultaneously with the beam screw. The rotary motion of drum, due to stretch of specimen, and the vertical movement of pencil, due to load, form the strain diagram.

The fingers of extensometer should be swung to one side just before the specimen breaks, in order to prevent injury to the instrument.

The Riehlé-Kenerson Extensometer.—This extensometer, shown in Fig. 112, was designed by Prof. Kenerson, of Brown University, and is arranged to draw the strain diagram of a tension specimen to just beyond the elastic limit with about 150 magnification, permitting the modulus to be obtained direct from the diagram. It can also be used as a micrometer extensometer, reading to .0001 inch.

The instrument is attached to the specimen by means of set screws, three in the upper and two in the lower clamp. The upper clamp supports the mechanism of the instrument, including the cylinder on which the diagram sheet is placed, the weight to which the pencil is attached, and the micrometer drums. The two set screws in lower clamp are placed exactly opposite on the specimen so as to suspend this clamp between them. On one side of this clamp is a column with pivot and screw for adjustment. The other side supports the spindle carrying micrometer drums. This spindle rests on a pivot, but its upper end is threaded and passes through a nut in upper clamp. It carries a grooved drum, around which is wound a cord for supporting the weight to which pencil is attached. As the specimen is stretched this weight descends and causes the spindle to revolve in its nut, thus indicating the amount of the extension directly on the graduated wheel and vernier.

A cord is attached to the poise on the beam of the testing machine and through a reducing motion turns the cylinder. As the specimen stretches the pencil moves downward and the combined movement produces the diagram. The diagram card is 6 inches long by 5 inches high, and with a magnification of 150, this permits a specimen to stretch .03 inch. When used as a micrometer extensometer, a stretch of 1 inch can be noted.

This instrument produces a card similar to that made by the autographic apparatus on the testing machine, but on a greatly enlarged scale. It is only used for work up to the elastic limit.

Practical Use of the Testing Machine.—In all specifications for machinery, the material is required to meet certain requirements

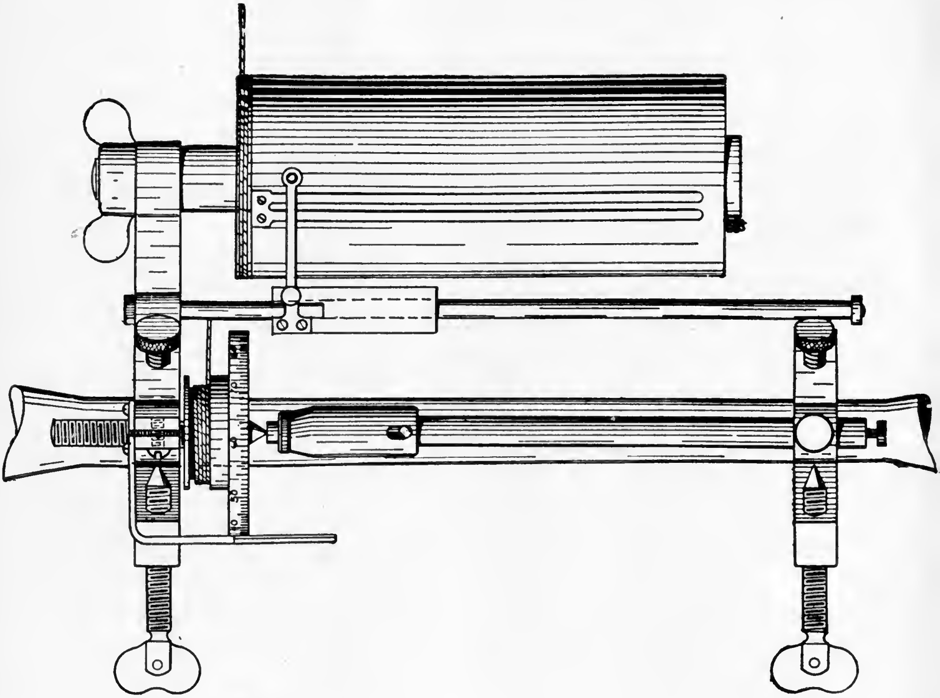

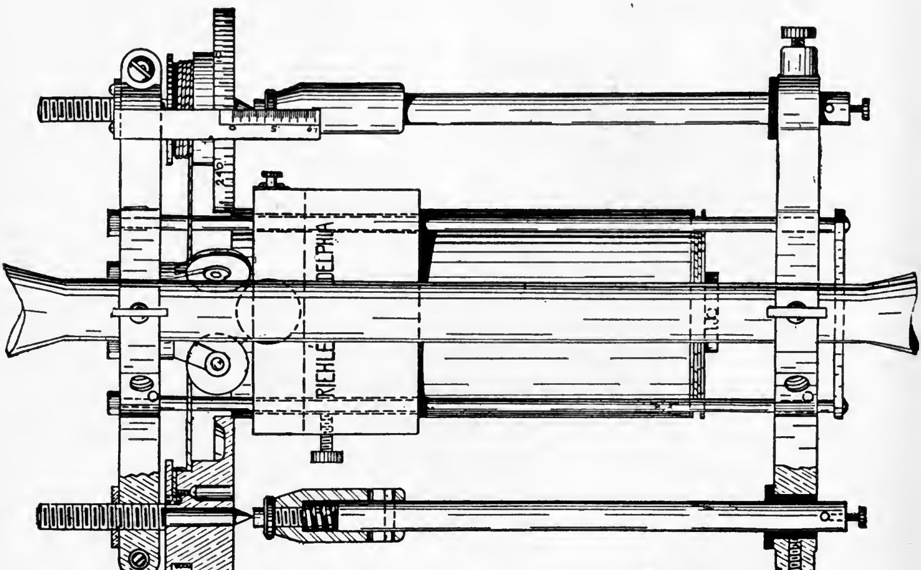
RIEHLE
DELPHIA

as to strength and elasticity. One or more test pieces must be cut from every heat, to be tested by the inspector before such material can be passed. It is usual to fix the minimum requirements as to (1) coefficient of ultimate strength, (2) coefficient of strength at the elastic limit, (3) percentage of elongation, (4) percentage of reduction of area.

The usual method of conducting a test is, after balancing the beam at zero load, to gradually apply the load, keeping the beam balanced by running the poise out by hand. At the *yield point,* the beam suddenly drops. The load at this point is recorded and from it the coefficient of strength at the elastic limit is calculated. The test is then carried on to the breaking point. The maximum load is thus obtained and from it the coefficient of ultimate strength is calculated. The specimen is then removed from the machine and the two parts having been put together, the total elongation is measured directly and the diameter at the break taken. From these the percentages of elongation and reduction of area are calculated.

If, as in some cases, the modulus of elasticity is also required, an extensometer must be used to determine the amount of elongation at the elastic limit.

Test Record.—

Date:
Specimen of: .... Tested in: ....
Original dimensions: $L=$ ...... : $d=$ .... : area= ....
Final dimensions: $L=$ ...... : $d=$ ...... : area= ......
(1) Coefficient of strength at elastic limit= ....
(2) Coefficient of ultimate strength= ....
(3) Percentage of elongation in 8 inches....................
(4) Percentage of reduction of area.................
(5) Modulus of elasticity ....

$$(1) = \frac{\text{Load at elastic limit}}{\text{Original area of specimen}};$$

$$(2) = \frac{\text{Maximum load}}{\text{Original area of specimen}};$$

$$(3) = \frac{\text{Final length} - \text{original length}}{\text{Original length}} \times 100;$$

$$(4)=\frac{\text{Original area}-\text{final area}}{\text{Original area}}\times 100;$$

$$(5)=E=\frac{(1)\times L}{\text{elongation at elastic limit}}.$$

Compression Tests.—Materials are tested in compression to determine their crushing strength and strength to resist bending; also at times their elastic limits, and, if ductile, their plastic limits. Short specimens, those whose length is less than five diameters, usually fail by crushing or flowing. Long specimens usually fail by bending toward the side of least resistance.

Materials may be divided into two general classes, in accordance with their behavior when subjected, in short specimens, to compressional stress. In the first classification are the plastic materials, such as wrought iron, soft steel, copper, the alloys, etc., which fail by flowing. After the elastic limit is passed, further compression results in an increase in the cross sectional area under a continually increasing load. For such materials there are two fixed points independent of shape of specimen, viz., the elastic limit and the plastic limit. It has been found that the elastic limit of these materials is nearly the same as their elastic limit in tension, and for this reason, and in view of the difficulty of measuring the deformation of short specimens, compressional tests upon them are seldom made.

The second classification embraces the brittle materials, such as stone, brick, wood, cement, cast iron, etc., which fail by crushing, due to the shearing on definite angles. With these materials the ultimate strength is easily determined.

In general it may be said that compressional tests are very rarely required for materials used in naval engineering. For soft steel and steel of high grade such as is used in building machinery the character of the material is sufficiently well determined by tensile tests.

Cross Bending Tests are used to determine, in case of brittle materials, like cast iron, the modulus of rupture and the resilience, and in ductile materials like wrought iron and soft steel, the elastic limit and modulus of elasticity. Other tests on springs, rails, rail joints, etc., determine the stiffness, *i. e.*, the deflection at given loads, the elastic limit, and in some cases, the ultimate strength.

For naval purposes, cross bending tests are frequently required on cast iron. They are usually limited to the determination of the coefficient of ultimate strength.

Shearing Tests are not prescribed in the Specifications for the Inspection of Engineering Material in the Navy. If the tensile properties of a metal are known, or can be ascertained, it is sufficient for all practical purposes to assume the shearing strength to bear a definite ratio to the tensile strength. This applies to material under a direct shear, as in a riveted joint. Shearing also takes place in a bar subjected to torsional stress, acting in a rotary direction around the axis. Such stresses are best investigated in a torsional testing machine.

DEPARTMENT OF MARINE ENGINEERING AND NAVAL CONSTRUCTION, U. S. NAVAL ACADEMY.

TESTS OF "ELEPHANT BRAND" PHOSPHOR BRONZE, MADE WITH THE RIEHLÉ SCREW POWER TESTING MACHINE. BRANDS A, B, S, AND F_2, CAST IN GREEN SAND. BRANDS X AND Y, ROLLED.

TENSION.

					Finished rods.	
Brand	A	B	F_2	S	X	Y
Original length, inches	2.	2.	2.	2.	2.	10.
Final length, inches	2.45	2.358	2.	2.14	2.718	11.188
Original diameter, inches	.977	.977	.965	.930	.798	.798
Final diameter, inches	.844	.875	.965	.906	.437	.422
Original area, sq. inches	.75	.75	.732	.680	.5	.5
Final area, sq. inches	.56	.601	.732	.645	.15	.14
Load at elastic limit, lbs	14,680	15,630	....	18,160	21,920	21,522
Maximum load, lbs	25,230	24,360	22,160	21,230	35,700	29,840
Per cent elongation in 2″	22.5	17.9	0.0	7.0	35.9	11.88*
Per cent reduction in area	25.3	19.87	0.0	5.15	70.0	72.0
Coef. of elastic strength	19,573	20,840	....	26,706	43,840	43,044
Coef. of ultimate strength	33,640	32,480	30,273	31,221	71,400	59,680
Modulus of elasticity	....	....	....	....	....	....

* In 10 inches.

COMPRESSION.

Brand	A	B	F_2	S	S
Cross section	Square	Round	Square	Round	Square
Original length, inches	1.	1.	1.	1.	1.
Final length, inches	.687	.622	.945	.655	.745
Original area, sq. inches	1.	.786	1.	.786	1.
Final area, sq. inches	1.41	1.11	1.05	1.05	1.21
Per cent reduced length	31.3	37.8	5.5	34.5	25.5
Per cent increased area	41.0	41.22	5.0	33.59	21.0

Specimens were still within the plastic limit and showed no signs of rupture under a load of 100,000 pounds, the limiting load of the machine.

Standard Test Pieces. Bureau of Steam Engineering Standards.—The specifications for steel and iron prescribe that "Test pieces from blooms, rolled bars, forgings, and castings are to have a length of 2 inches between measuring points and an area of cross section of 0.2 square inch, diameter 0.505 inch." Test pieces for composition castings have a length of 2 inches between measuring points and an area of cross section of 1 square inch.

Full-size bars and rods, within the capacity of the testing machine, may be used as tensile test pieces.

Test Pieces from Plates.—When heats are rolled into plates of varying thickness, the test pieces shall be taken from plates not less than 0.3-inch thick. The standard width of tensile test pieces from plates and boiler tubes will be 1½ inches, the thickness the same as the plate or tube, and the length between measuring points 8 inches.

All tensile test pieces shall be uniform in cross section between measuring points. A variation of 5% above or below in area is allowed.

The Bureau of Ordnance uses two standard test pieces. Fig. 113 shows the standard used for blooms, forgings, bars, and castings. Fig. 114 shows the standard for plate material. It will be noted that these standards also meet the specifications of the Bureau of Steam Engineering for most material.

Riehlé-Miller Torsional Testing Machine.—This machine, shown in Fig. 115, consists of a head for applying the stress to the specimen, and a carriage for carrying the weighing mechanism and the head which receives and transmits the load to the weighing mechanism. The twisting head is operated through worm gearing and spur gearing to reduce the motion of the head. The worm shaft is connected to the motor by a silent chain drive. The motor is reversed by a controller which, by means of resistance box, gives six variations of speed in either direction, varying from 50% to the normal speed of the motor. There is a lever, seen just above spur wheel on head, for operating the friction clutch to start or stop the machine. The weighing end can be adjusted to suit different lengths of specimens up to 5 feet, by means of a rack and pinion operated by hand wheel.

The head on weighing end has a set of toggle grips for holding the specimen, and is supported by a parallel system of levers that completely neutralize any load except the torsion or twisting load exerted on the specimen. A similar grip arrangement holds the other end of specimen in the head that applies the load. These grips are designed to take round or hexagon specimens from $\frac{1}{2}$ inch to $1\frac{1}{2}$ inches in diameter.

The beam is similar to that for the testing machine, previously described, but the poise is moved by hand wheel only.

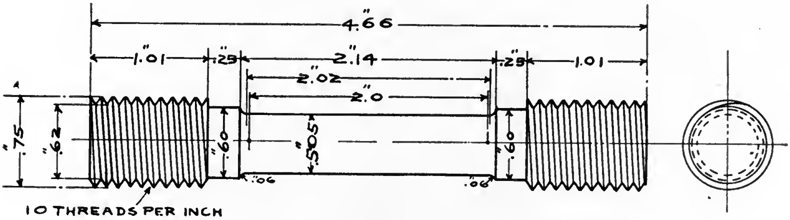

FIG. 113.

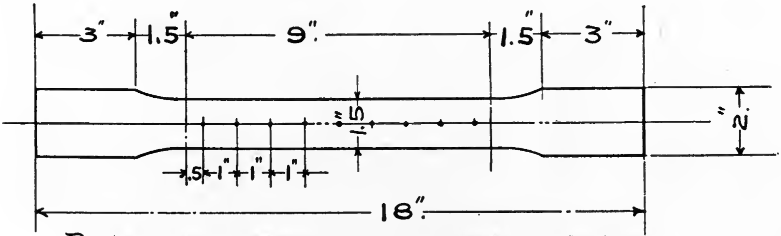

PIECE TO BE OF SAME THICKNESS AS THE PLATE

FIG. 114.

The angle of torsion of the specimen, or the number of turns required to break the specimen, is noted on the graduated ring attached to the twisting head.

The Torsion Indicator.—In reading the angle of torsion on the head of the machine, it is difficult to eliminate errors due to the slipping of the specimen in the grips. To avoid this difficulty, it is necessary to use an indicator attached directly to the specimen. The one in use in the laboratory consists of a disc, graduated on its outer edge in degrees, clamped on one end of the specimen, and a pointer clamped on the other end, the finger of the pointer extending paral-

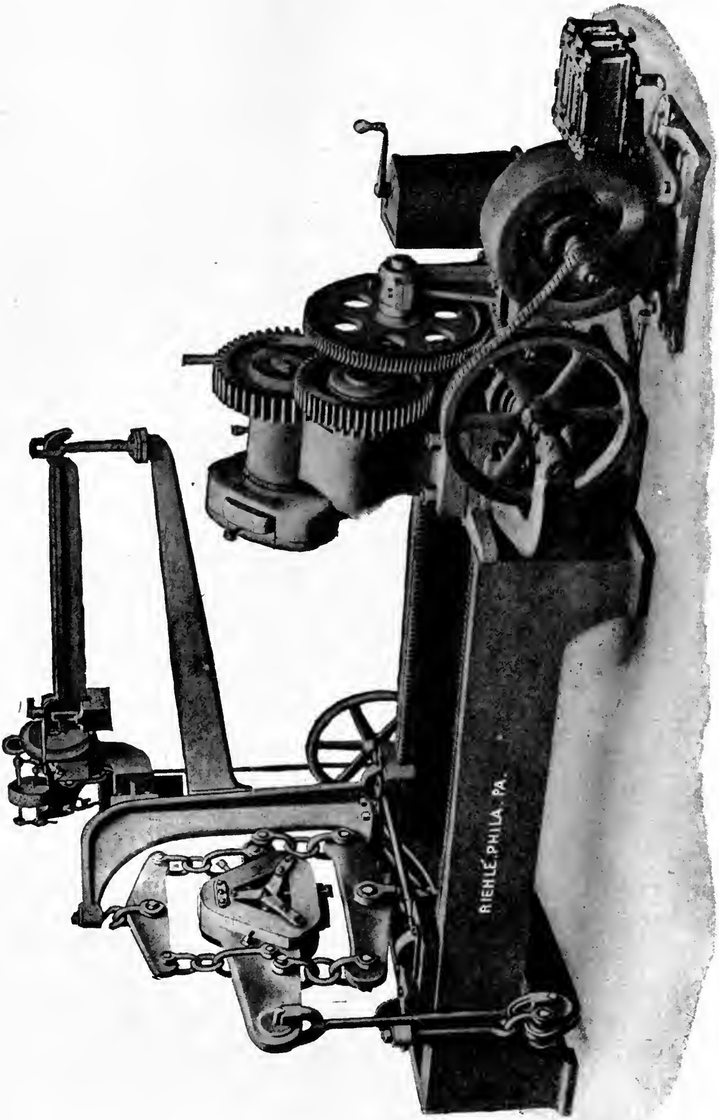

FIG. 115.

lel to the specimen, up to the graduations on the face of the disc. The movement of the pointer over the graduated disc indicates the angle of torsion.

With this form of indicator, a different pointer is required for each length of specimen. The Riehlé Torsion Indicator avoids this difficulty and is suitable for specimens of any length. A light gear wheel is attached to each end of the specimen by 3 set screws. Each of these drives a pinion moving a pointer over a dial. The dial is graduated and when the gear wheel is turned, the angle is indicated to within $\frac{1}{2}$ degree on the dial. With a specimen under test the reading of both dials is taken and the reading on the dial near the weighing end is subtracted from the reading of the dial near the power end.

Cements.

Cements are used only to a limited extent on board a ship, but their use is so extensive in other branches of engineering allied to marine engineering, that some knowledge of them and the method of testing them is of importance to the naval engineer.

Hydraulic Cement may be broadly defined as a material which, when pulverized and mixed with water into a paste, acquires the property of setting and hardening under water. In engineering work, four classes of cement are generally recognized—(1) Portland cement, (2) natural cement, (3) Pozzuolana cement, (4) mixed or blended cement.

Portland Cement is an artificial cement, manufactured from selected materials, commonly limestone and clay, with other materials varying with each brand. The mixture is calcined until the materials begin to run together and the resulting clinker is ground to a fine powder. It is named from its resemblance in color to the famous Portland limestone in England.

Natural Cement is the product resulting from the burning and subsequent pulverization of an impure grade of limestone, containing lime and clay, the heat of burning being insufficient to cause vitrefaction. It is sometimes called *Roman* cement, from a fancied resemblance to Roman mortar. In the United States it is also widely known as *Rosendale* cement, from the town in the State of New York, where much of it is produced.

Pozzuolana or Puzzolan Cement is obtained by grinding together an intimate mixture of slaked lime and blast furnace slag or volcanic lava. It is not burned, the hydraulic ingredients being present only as a mechanical mixture. It is so named from a town in Italy where much of it is made and where there is a large deposit of the particular form of lava used.

Mixed Cements cover a large variety of products, made by combining the other forms of cement, or mixing them with an inert material. "Improved Cements" are naturals, containing from 10 to 30 per cent of Portland clinker. Sand cements are made by finely grinding a mixture of Portland cement and sand in varying proportions dependent upon the use to which they are to be applied.

Neat Cement is cement mixed with water only.

Concrete is a mixture of cement with sand, stone, or pebbles, and water.

Reenforced Concrete contains steel bars or other shapes to give added strength.

Portland cement is the variety commonly employed and when the term *cement* is used without qualification, this is what is generally understood. The commercial article is usually a mixture containing more or less sand. For this reason the specifications for cement are closely drawn in order to obtain material of the quality desired. In ordinary use, one part is mixed with from $\frac{1}{2}$ to 5 parts of sand according to the purpose for which it is to be employed. The cleaner and sharper the sand, the stronger will be the resulting mixture.

Natural cement is distinguished in use by its lighter weight, quicker set, and lower strength in the earlier stages of hardening. It is not adapted for use on board ship on account of its lower strength.

Salt water should never be used in mixing cement, on account of the action of the salt in producing disintegration.

Uses of Cement on Board Ship.—On board a naval vessel, the bilges and double bottoms are covered with cement to protect the plating and make them easier to keep clean. Inaccessible pockets in bilges are frequently filled with cement. The mixture used is 1 part best Portland cement to 2 parts sand.

The walls of trimming tanks and tanks for the storage of fresh water are covered with cement to prevent corrosion. For this purpose a thin wash of neat cement is applied with a paint brush.

In old boilers, with leaky shell seams that give trouble, cement is sometimes used to advantage. When thus used the surfaces must be quite clean and the cement in the form of a thin wash, mixed neat, is applied on the inside of the boiler. Considerable care must be exercised in order to stop a leak by this method, as water will in many cases work its way along the seam from a point some distance removed from the leak. When thus used on a steel or iron surface exposed to heat, but little trouble is experienced with the cement cracking, since its coefficient of expansion is approximately the same as that of the metal.

Cement Testing.—The usual tests applied to cement are those for specific gravity, tensile strength, fineness, constancy of volume, and time of initial and final set. It is not usual to make compression tests in America. The results in tension vary directly with those in compression, so that the tensile strength is a satisfactory index of the value of the cement in compression.

The Standard Cement Specifications of the American Society for Testing Materials provide that the acceptance or rejection of cement shall be based on the following requirements:

Specific Gravity.—The specific gravity of the cement thoroughly dried at 100° C., shall be for Portland cement not less than 3.10, and for natural cement not less than 2.8.

Fineness.—Portland cement shall leave by weight a residue of not more than 8% on the No. 100 and 25% on the No. 200 sieve. Natural cement shall leave not more than 10% on the No. 100 and 30% on the No. 200 sieve.

Time of Setting.—Portland cement shall develop initial set in not less than 30 minutes and final or hard set in not less than one hour nor more than 10 hours. Natural cement shall develop initial set in not less than 10 minutes and hard set in not less than 30 minutes nor more than 3 hours. Setting of the samples under test should take place in moist air under as uniform conditions as possible. A sudden change or range of temperature in the room in which the tests are made, a very dry or humid atmosphere, and other irregularities, vitally affect the rate of setting.

Tensile Strength.—The minimum requirements for tensile strength for briquettes one inch square in cross section shall be within the following limits, and shall show no retrogression in strength within the periods specified: *

Portland Cement, Neat.

Age.	Strength. Lbs.
24 hours in moist air	150-200 *
7 days, 1 day in moist air, 6 days in water	450-550
28 days, 1 day in moist air, 27 days in water	550-650

One Part Portland Cement, Three Parts Standard Sand.

7 days, 1 day in moist air, 6 days in water	150-200
28 days, 1 day in moist air, 27 days in water	200-300

Natural Cement, Neat.

Age.	Strength. Lbs.
24 hours in moist air	50-100
7 days, 1 day in moist air, 6 days in water	100-200
28 days, 1 day in moist air, 27 days in water	200-300

One Part Natural Cement, Two Parts Standard Sand.

7 days, 1 day in moist air, 6 days in water	25- 75
28 days, 1 day in moist air, 27 days in water	75-150

Constancy of Volume.—Pats of neat cement about 3 inches in diameter, ½ inch thick at center, tapering to a thin edge, shall be kept in moist air for a period of 24 hours.

(a) A pat is then kept in air at normal temperature and observed at intervals for at least 28 days.

(b) Another pat is kept in water maintained as near 70° Fah., as practicable, and observed at intervals for at least 28 days.

(c) In the test of Portland cement only, a third pat is exposed in any convenient way in an atmosphere of steam above boiling water, in a loosely closed vessel for five hours.

These pats, to satisfactorily pass the requirements, shall remain firm and hard and show no signs of distortion, checking, cracking, or disintegrating.

Gilmore Needles.—The times for initial and hard set are made respectively with a needle 1/12 inch in diameter, weighted to ¼ lb., and 1/24 inch in diameter, weighted to 1 lb. The moment when the

---

* For example, the minimum requirement should be some specified value within the limits of 150 and 200 lbs., and so on for each period stated.

coarse needle fails to sink into the cement, when held lightly in a vertical position between the fingers, the point resting upon the specimen, is called the time of initial setting, and similarly, the time when the fine needle will no longer penetrate, is the moment of final or hard setting.

Tensile Tests.—Fig. 116 shows the standard form of tensile briquette in use in the United States. It is 1 inch thick, giving an area of cross section of 1 square inch at the smallest part where the break occurs.

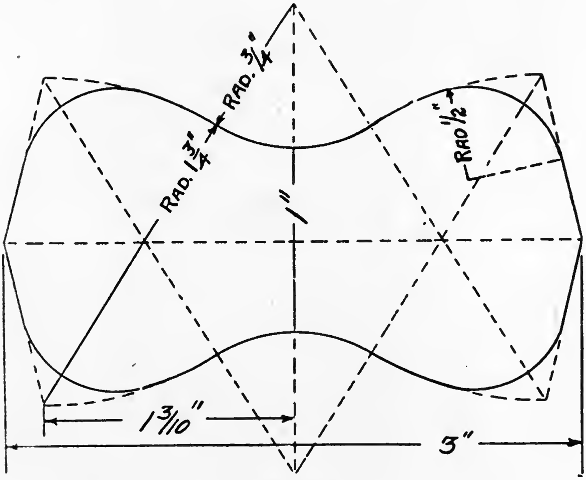

FIG. 116.

The samples to be tested are thoroughly mixed and the specified quantity of water added. The mixture is then worked up into a plastic mass and moulded in brass briquette moulds. It is usual to do this work by hand where many specimens are to be tested, the experience of the operator giving uniformity of results. A briquette making machine is shown in Fig. 117, in which a hammer of fixed weight is made to fall on a disc placed over the mould containing the briquette. The number of strokes is fixed and the blows are stopped automatically after a definite number. The machine is useful to secure briquettes of uniform density particularly where but few tests are made and the work is divided among several operators.

Fairbanks' Improved Cement Testing Machine.—The construction of this machine is shown in Fig. 118. Its operation is described as follows:

Hang the cup F on the end of the beam D. See that the poise R is at the zero mark and balance the beam by turning the ball L. Fill the hopper B with fine shot. Place the briquette in the clamps N-N, using great care to avoid eccentricity. Tighten the hand wheel P until the indicators are in line. By means of the hook lever Y the worm is now engaged with the gear. The shot valve is then opened, allowing the shot to run into the bucket, and the crank is turned with sufficient speed to hold the beam in equilibrium until the briquette is broken. At the point where the spout joins the reservoir will be noticed a small valve, by which the flow of shot may be regulated.

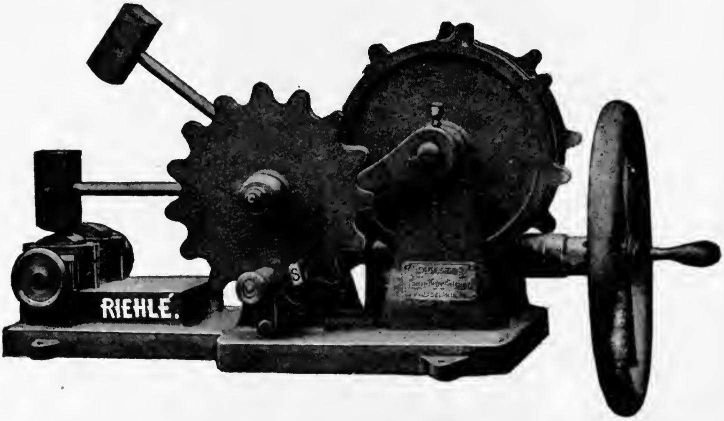

FIG. 117.

When the briquette breaks, the beam D will drop and automatically close the valve J. Then remove the cup, with its contents, hanging the counterpoise G in its place. Hang the cup F on the hook under the large ball E, and weigh the shot, using the poise R on the graduated beam D and the weights H on the counterpoise G The result will give the number of pounds required to break the specimen.

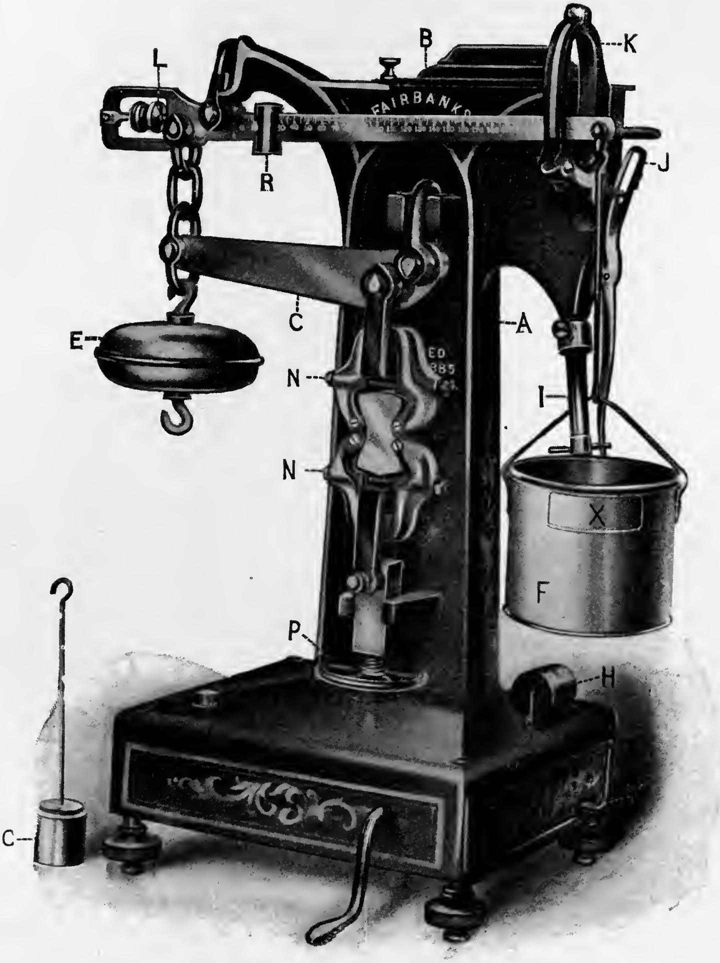

FIG. 118.

CHAPTER IX.

ENGINE LUBRICATION.

Open Systems.—Until recently all engine bearings were lubricated by gravity through tubes, the oil being fed into the tubes through wicks. Many engines built in the last few years have been fitted with the *sight feed* system, in which the flow of oil to each tube is regulated by a valve, a portion of the tube being made of glass to permit visual regulation of the flow.

Much attention has been given recently in our navy to economy in the consumption of all expendable stores, including oil. One of the results has been to direct attention to the superiority of the *wick feed* system. By varying the number of strands in the wick and the number of wicks, the quantity of oil can be regulated to a nicety. Sight feed lubrication cannot be closely regulated except by the most careful attention which it is difficult to give where there are a large number of bearings and impossible in many out of the way locations.

Forced Lubrication.—In late machinery designs forced lubrication has been fitted. The oil is sent to the bearings under pressure from a pump. It then drains to a receptacle in the crank pit or elsewhere low down in the ship, where it is taken up by the pump suction. At a convenient location in the system it passes through a cooler built on the plan of a surface condenser, where the heat from the bearings is given up to the cooling water.

This system permits the same oil to be used over and over again, the only new oil required being such as is necessary to make up losses from leakage and from wear. It is necessary from time to time to pump the oil into tanks and allow the water and sediment to settle, thus removing it from the system, but this can be done at such times as will not interfere with the operation of the engines. This system is very economical in the consumption of oil, but a greater advantage is the great reduction in friction and wear in the bearings.

Engine Lubricants.

Practically all oils used for lubricating purposes at the present time in the United States have as their base a heavy mineral oil, which is the last of the series of distillates from crude petroleum. Various other constituents are added by oil manufacturers to obtain a compounded oil that will suit the particular requirements for which it is intended. The oils that are used on board ship are as follows:

Oils for Wick or Gravity Feed.—These are compounded oils of high lubricating value sufficiently fluid to feed well through wicks. Such oils are usually purchased under their trade names, the name carrying the manufacturers' guarantee of the good quality and uniformity of the oil. Oils of this character, however excellent the results they may give individually are not likely to do well when two or more brands are mixed. When changing from one brand to another all oil cups and other receptacles must be thoroughly cleaned before starting the new oil.

These oils are used on engine pins and bearings where the feed is by gravity. Also in receptacles such as thrust bearings where the shaft runs in a bath of oil. In such bearings the oil usually shows a tendency to form a lather, this being characteristic of mixed oils where any water is present. This lather is itself an excellent lubricant and as it cannot form in a hot bearing its presence indicates that the bearing is working well.

Oils for Forced Lubrication must be pure mineral oils on account of the tendency of mixed oils to lather and choke the small pipes and passages. Such oils are also sold under trade names that are accepted as guarantees of their uniform character. Although all such oils are supposed to be pure mineral oils, it will be found the best policy not to begin to use a different brand without first cleaning out the system.

Cylinder Oils must not vaporize or carbonize at temperatures that obtain in the engine cylinders. They must therefore have a high flash point. When used in the cylinders a considerable percentage passes over into the condensers and thence into the boilers. In order to produce the minimum amount of injury to the boilers they must contain no acid. These conditions are best met in a heavy mineral oil with no animal or vegetable constituents and it is usual to specify that cylinder oils must be pure mineral oils.

Cylinder oil was considered necessary with horizontal engines. On account of the injury to boilers and particularly to water-tube boilers, resulting from carrying it over into condensers, it became necessary to reduce the quantity as much as possible. It has been found practicable to entirely dispense with it in vertical engines, and the only cylinder oil now employed is used to swab on piston rods in case they should run warm in stuffing boxes.

Ice Machine Oils must not vaporize at the temperatures that exist in the compressor cylinders. Otherwise the oil vapors would pass over and condense in the pipes of the system, thus preventing its efficient operation. On the other hand in a machine of the cold-air type the same oil used as a lubricant for the expander cylinder must not solidify at the low temperatures existing in that cylinder. A cylinder oil might be satisfactory in the compressor cylinder of a compression machine, but if used in the expander cylinder of an air machine would be wholly unsatisfactory. It is best when practicable to obtain ice machine oils of a brand that is known to be satisfactory.

Vaseline, etc.—Heavy refined petroleum is used for coating polished surfaces that are liable to rust when not in use. Engine cylinders when they are to stand idle for several days must be wiped out and coated in this manner.

Grease cups are little used for engine lubrication at the present time. They are still fitted on hoisting and other machinery subject to irregular use, where when the bearing begins to warm the grease melts and runs down. Vaseline may be used in grease cups. *Albany grease* is a proprietary preparation usually supplied for this purpose. Tallow, which was formerly employed, is but little used at present on account of the acid which it is very liable to contain attacking the polished surface of the pins.

Testing of Lubricants.

Determinations Required.—The following particulars are required in a complete test of a lubricant, as made in a laboratory:

(1) Its composition, including the detection of any adulterant that may be present.

(2) Its specific gravity.

(3) Its viscosity.

(4) Any tendency to gum.

(5) The temperatures of flashing, ignition, and solidification.

(6) The detection of any acid that it may contain.

(7) The coefficient of friction.

(8) Its durability and heat removing power.

(9) The presence of any grit or other foreign matter.

The composition and adulteration of a lubricant can only be properly determined by a chemical analysis.

The specific gravity is determined by the ordinary methods in use in the physical laboratory. Special care should be observed to thoroughly clean all instruments with benzine after using for the testing of oil.

Viscosity of oil is closely related but not proportional to its density. It is also closely related, and in many cases inversely proportional, to its lubricating properties. The viscosity varies according to the temperature, but not in the same proportion for different oils, hence tests for viscosity should be made with the temperatures the same as those at which the oil is to be used. The less the viscosity, consistent with the pressure to be used, the less the friction

The viscosity test is considered of great value in determining the lubricating qualities of oils. By it alone we could probably determine the lubricating qualities to such an extent that a good oil need not be rejected nor a bad oil accepted. There are, however, no set standards for the determination of viscosity and the results are to be considered as comparative rather than absolute.

There are several methods of determining the viscosity. It is usual to take the viscosity as inversely proportional to the flow through a standard nozzle, while maintained at a constant, or constantly diminishing head, and constant temperature. A comparison is made with water or with some well-known oil, as sperm, lard, or rape-seed, taken as a standard, under the same conditions of pressure and temperature.

Engler's Viscosimeter.—Engler's Viscosimeter, shown in Fig. 119, consists of a chamber holding the oil to be tested, a water bath, a flask graduated so as to receive 200 cc. of the oil, thermometers and the opening through which the heated oil flows out upon the withdrawal of the plug.

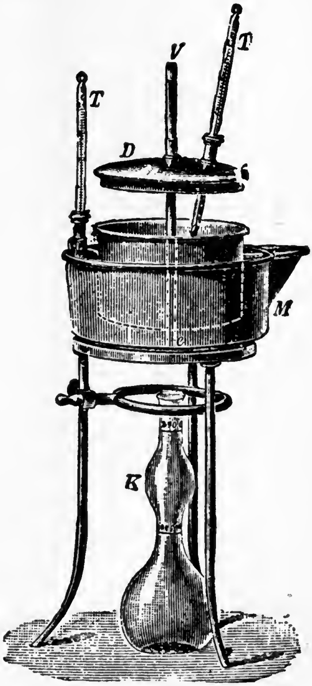

FIG. 119.

In using this instrument the viscosity of an oil is stated in seconds required for 200 cc. of the oil to run into the flask. Heat can be applied to the water bath, the viscosity being determined at any temperature required up to 100° C. Any temperature up to 360° C. can be secured by filling the water bath with paraffine instead of water.

Engler recommends that all viscosities be compared with water, thus: If water requires fifty-two (52) seconds for delivery of 200 cc. into the receiving flask, and the same amount of an oil under examination requires 130 seconds, the ratio is determined by $\frac{130}{52}=2.50$, the oil thus having a viscosity of 2.5 times that of water.

The bath is filled with a suitable liquid to a height roughly corresponding with the point of the gage in the oil cylinder. Water answers well for temperatures up to 90° C. or 200° F., and for higher temperatures a heavy mineral oil may be used. The liquid having been brought to the required temperature, the oil to be tested, previously brought to the same temperature, is poured into the cylinder, until the level of the liquid just reaches the point of the gage. A narrow-necked flask holding 200 cc. to a point marked on the neck, is placed beneath the jet in a vessel containing a liquid of the same temperature as the oil. The rod valve is then raised, a stop-watch at the same time started, and the number of seconds occupied in the outflow of 200 cc. noted.

It is of the greatest importance that the oil cylinder should be filled exactly to the point of the gage, after inserting the thermometer, and that the standard temperature should be precisely maintained during the experiment, a difference of $\frac{1}{2}$ degree F. making an appreciable alteration in the viscosity of some oils. It is also essential that the oil should be quite free from dirt or other suspended matter, and from globules of water, as the jet may be otherwise partially obstructed. If the oil cylinder requires to be wiped out, paper rather than cloth should be employed, as filaments of the latter may be left adhering. When oils are being tested at temperatures much above that of the laboratory, a gas flame is applied to the copper heating tube, and the agitator kept in gentle motion throughout the experiment.

The Boverton-Redwood Viscosimeter.—This is shown in Fig. 120. *A* is a central vessel containing the oil which flows out through the standard orifice at *B*. *C* is an enveloping vessel around *A*, through which hot water is circulated, passing out at the cock *D*. *E* is a framework carrying vanes for circulating the water and a thermometer *F* for measuring its temperature. *G* is a thermometer for measuring the temperature of the oil. *H* is a handle for moving the framework *E*. *J* is a water leg to which a lamp is applied in heating up the oil. *K-K* are thumb screws in the feet of the supporting tripod, by which the instrument is levelled. *L* is a spirit level which is placed over *A* and the apparatus levelled by its guidance before operations are commenced.

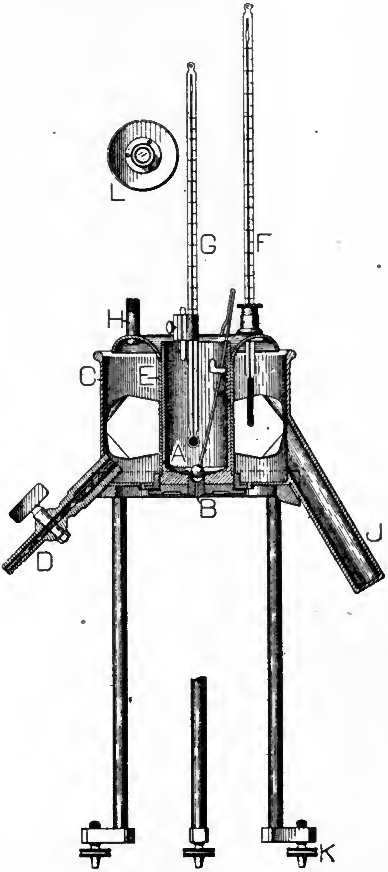

FIG. 120.

In operation the standard quantity of oil is placed in *A* and brought to the standard temperature. The orifice, which has been plugged, is then opened and the time required for the oil to flow through is noted.

Gumming or Drying is a conversion of the oil into a resin by oxidation, and occurs on exposure of the oil to the air. In linseed and the drying oils it occurs very rapidly, and in the mineral oils very slowly.

The usual method of testing for this property is by use of a slightly inclined plane of metal or glass. A small, but fixed, quantity of the oil is started at the upper edge of the plane and the time required to reach the bottom is taken as a measure of its gumming properties. Comparison is made with a standard oil. This test has but little value in determining the quality of an oil.

A better test is made with the standard oil testing machine. Fresh oil is applied, a run made, and the friction noted. After the bearing has been exposed to the air for a time, a second run is made, and the increase of friction is noted. In this case also, comparison must be made with some standard oil.

The Flash Test.—The effect of heat is to increase the fluidity of oils and to lessen the viscosity. The temperature at which oils flash, ignite, boil, or congeal is often of importance in the determination of the suitability of an oil for some special purpose.

The temperature at which inflammable vapors are given off is the *flashing point,* and should in all cases be known for inflammable oils that are to be stored on board ship. The test is made in two ways.

The Open Cup.—The oil to be tested is placed in an open cup of watch glass form, which rests on a sand or water bath. Heat is applied to the bath and as the oil becomes heated a lighted match is passed at intervals of a few seconds over the surface of the oil, at a distance of about half an inch from it. At the instant of flashing, the temperature of the bath is noted, which is the " flash point."

Improvised apparatus, such as this, is sometimes employed for tests, where standard instruments cannot be obtained. The results are subject to considerable variation, due to differences in the method of applying the match.

The New York State Board of Health Flash Tester.—This is shown in Fig. 121 and is on the open cup principle. A light mica cover rests on the cup, having two openings, one for the passage of a thermometer, and the other for the application of the match. While not sufficiently heavy to confine the vapors, this cover serves to give uniformity to the results obtained. The thermometer in the oil measures its temperature directly.

The Cleveland Flash Point Tester.—Fig. 122 shows the Cleveland Flash Point Tester. The oil is contained in a central vessel, which is surrounded by a bath of steam. The oil is completely covered and the vapors that are given off pass down through a central tube, to the mouth of which the match is applied. A thermometer in the oil gives the temperature of flashing. A second thermometer in the surrounding jacket gives the temperature of the bath. If the temperature of flashing is above that obtainable with steam, the jacket may be filled with sand and heated by the

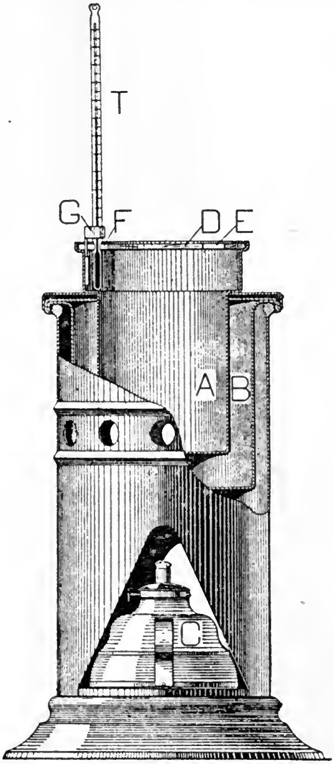

FIG. 121.

application of a Bunsen burner. For ordinary purposes, steam is better, since the heat thus obtained is more uniform. This apparatus is largely used for making determinations for heavy oils.

Other apparatus for making the flash test is described in Chapter X.

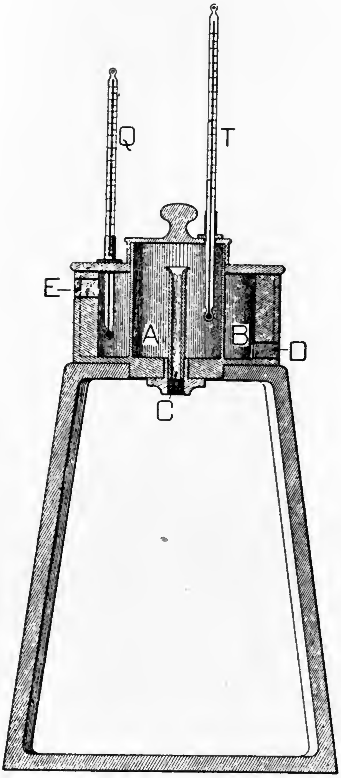

FIG. 122.

The Burning Point is determined by heating the oil to such a temperature, that when the match is applied as for the flash test, the whole of the oil will take fire. The reading of the thermometer just before the match is applied is the burning point. The apparatus used is the open cup flash point testing apparatus with thermometer directly in the oil to be tested.

Evaporation.—Mineral oil will lose weight by evaporation, which may be determined by placing a given weight in a watch glass and exposing to the heat of a water bath for a given time, as twelve hours. The loss denotes the existence of volatile vapors, and should not exceed 5 per cent in good oil. Other oils often gain weight under these conditions by the absorption of oxygen.

Cold Tests are made to determine the behavior of oils and greases at low temperatures. The sample to be tested is placed in a test tube, in which is inserted a thermometer. The tube is then packed in a freezing mixture, composed of small particles of ice mixed with salt, with provision for draining off the water. After the sample has congealed, the tube is removed from the freezing mixture, and the oil is stirred gently with the thermometer. The temperature indicated when the oil is melting is the *chill point.*

Acid Tests.—The ordinary test for the presence of acid is to observe the effect on blue litmus paper. This is a qualitative test only, and is not very satisfactory. For this test a sample of the oil should be sent to the chemical laboratory.

Oil Testing Machines.—The coefficient of friction, the durability, and the heat removing power of the oil, are determined by the use of oil testing machines. These are of various designs, the form used in several U. S. Navy laboratories being shown in Fig. 123.

The main journal of the machine rests on the four large rollers, shown in the figure. This reduces friction and prevents the heating of the shaft, which would affect the results of temperature tests. Ball thrust collar bearings prevent motion along the direction of the axis of the journal, and take any thrust in this direction that would cause friction.

The bearing for use in the tests, rests on the top of the journal, and fits in a cap, to which the yoke frame is attached. This is connected by a system of links and levers, through hardened steel surfaces and knife edge supports, to the weighing beam, seen on the right. A turn buckle, concealed under the frame of the machine, enables the load on bearing to be varied by the operator as may be desired. The amount of such load is weighed by the beam.

The diameter of journal is 6 inches. The bearing is 4 inches

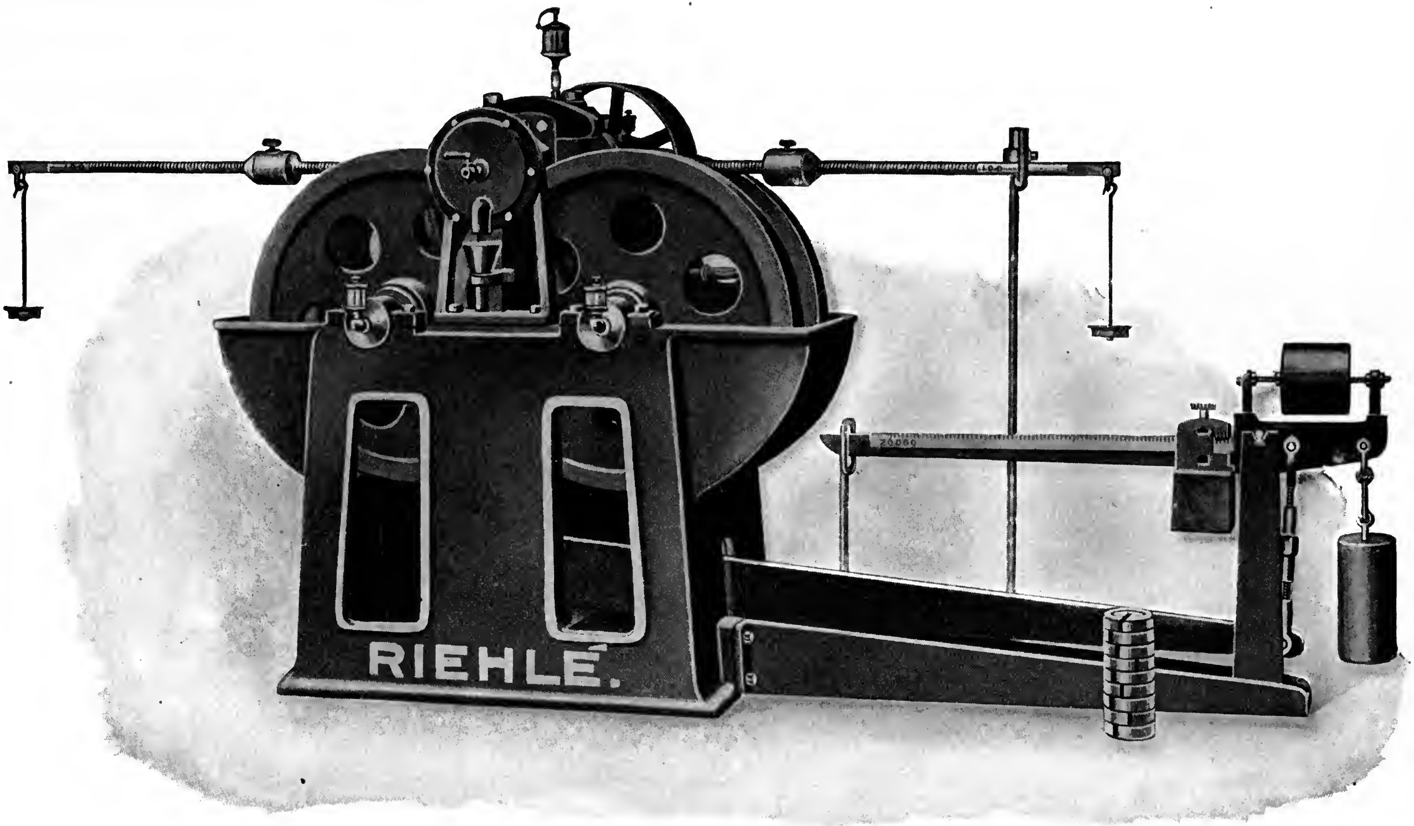

FIG. 123.

long by $2\frac{1}{2}$ inches wide. This gives a projected area of 10 square inches, but after determining the direction in which the machine is to run, the leading edge of this brass is shaped down in a horizontal plane so as to reduce this area by one square inch, removing the sharp edge to permit ready access of oil and bringing the projected area of bearing to 9 square inches.

In the center at top of cap is a hole for thermometer well. This is carried into the cap brass to within $\frac{1}{4}$ inch of the bearing surface, and a $\frac{1}{4}$-inch gas pipe nipple is screwed in to seal the joint between cap and brass. A standard thermometer is provided for use in the well in making tests. The space in well around thermometer is filled with some good lubricating oil in order to make contact between the brass and the bulb of thermometer.

In making a test, after the machine is in operation, the pressure is applied by setting out the poise on the pressure beam to the desired point and then tightening the turn buckle until the beam is balanced. Before the first test is made, the total weight of the parts whose weight is sustained by the bearing must be determined, and this amount, which is approximately 500 pounds, must always be added to the pressure given by the beam, in order to obtain the total pressure on the bearing. When the poise is at 1000 pounds the total pressure on the bearing will be 1000 plus 500, or 1500 pounds, approximately.

Methods of Conducting Tests.—No standard method of conducting a test of lubricating oils has been generally adopted. In general the object of a test is to determine the coefficient of friction. The usual method is to run the machine at a given speed and under a given pressure on bearing. Under these conditions, if the load is not excessive, and a sufficient quantity of lubricant is supplied, the temperature will rise to a certain point and remain approximately constant. Four methods of observation are then practiced: First, to note the temperature at the end of a given time; second, to note the time necessary to reach a given temperature; third, to note the temperature to which the bearing rises and at which it remains constant for a given time; fourth, to maintain the bearing at a given temperature by cooling it. The third method is commonly used because it is easier to carry out and more nearly approximates the running conditions of a bearing.

To conduct a test according to the third method: Clean the journal, bearing, and pad with gasoline in order to remove all traces of lubricating oil. Soak the pad with the sample oil and also apply it freely to the journal and bearing. Run the machine a few minutes, until the bearing is well lubricated, then apply the desired pressure by means of the turn buckle as has been described. The machine must be run at a constant speed, or if there is a variation of speed it must be slight, and readings of the revolutions per minute must be taken in order to obtain the average. Keep a log of the test, taking readings of the revolutions, temperature, and friction, every five minutes, and continue until the temperature remains constant for thirty minutes. Record the following data: Date, kind of lubricant, total pressure on bearing, pressure in pounds per square inch of projected area, friction load, revolutions per minute, velocity in feet per minute, duration of test, temperature of room, temperature of bearing at start, temperature of bearing when constant. Calculate the coefficient of friction and make it a part of this record. To calculate the coefficient of friction, divide the friction load, as obtained from the friction beam, by the total pressure in pounds on the bearing.

Navy Department Method.—The following method of testing oil has been evolved by Mr. C. A. Webb, in charge of the testing laboratory, Department of Steam Engineering, Navy Yard, New York, where a machine of this description has been in use for several years. The results and conditions of the test are embodied in specifications for lubricating oil for marine machinery, issued by the Bureau of Supplies and Accounts, Navy Department. The object of the test is to determine the wearing quality of the oil, although the coefficient of friction is also obtained.

The accessories with the machine, necessary for this test, are, a pair of laboratory scales, preferably in glass door case, a small copper cup of 4 ounces' capacity to hold the oil, and an orange wood stick about $\frac{1}{4}$ inch diameter by 6 inches long, shaved to a thin blade for half its length. The oil pad and water-cooling device for the journal are not used in this test.

The directions for making a test, as given by Mr. Webb are as follows:

(1) Clean the bronze bearing and journal with gasoline, using a cloth to wipe them dry.

(2) Weigh about half an ounce of the oil to be tested, together with the oil stick, in cup, and call it Weight of Oil at Start.

(3) Apply a small amount of this oil to the bearing and journal; place bearing in place on journal and apply the full load.

(4) Place the thermometer for taking temperature of bearing in its place, and after reading thermometers, counter, and time, start the machine.

(5) At the instant the machine is started a drop of oil from the cup should be applied to the journal on the advancing side, where the bearing touches the journal, and spreading the oil so as to make a uniform lubrication. All oil used on test will be applied so, passing the stick backwards and forwards along the face of the bearing, spreading the oil evenly. If the pull in pounds increases in spite of the spreading, apply fresh oil from the cup until the pull falls back or becomes less. The pull in pounds should fall to normal in about 20 minutes from start to test. Keeping the poise on friction beam just balanced while the oil is uniformly spread, the proper amount of oil can be easily found; for, as the temperature increases the pull decreases, until the oil has reached its best working temperature. As long as the pull does not increase with a uniform lubrication by spreading with the stick, it does not require fresh oil, but as soon as the pull overbalances, a little fresh oil will bring it back to balance. Keep poise advancing and in balance while spreading the oil. The first half hour will in most cases finish the applying of fresh oil, and the last hour and a half will require constant spreading. The temperature and pull will reach the normal reading for the oil under test in the first hour, and remain so to the end, as a rule.

(6) At the end of the two hours, read the counter and weigh the oil cup with stick and remaining oil. The difference in weight in grains Troy gives the weight of oil used for the test. The reading of counter will give the revolutions for the two hours, from which we get the average revolutions per minue, and work up the results.

$$\frac{\text{Circumference of journal in feet} \times \text{R. P. M.} \times \text{load}}{\text{Troy grains of oil}} = \text{not less than } 325{,}000.$$

$$\text{Coefficient of friction} = \frac{\text{Pull in pounds}}{\text{Total load}}.$$

Before starting the machine, the weight beam is adjusted to exactly counterbalance the weight of framing and the friction beam arms are also brought to equipoise. A load of 2700 pounds is then added to the brass by the weight beam scales, equalling 300 pounds per square inch of projected area. This is the standard load for all these tests. A starting load of about 100 pounds is also put on that friction beam which is behind the direction of rotation of top of journal. This is subject to further adjustment during the tests.

The number 325,000 in the above formula is the coefficient of performance, which must be reached by an oil in order for it to be accepted. It does not indicate the foot pounds of work done per grain of oil, but is simply an arbitrary standard. The coefficient of friction is not specified in the requirements for oil, but it indirectly governs the limit of temperature and the quantity of oil used.

Log of Test.—

OIL FRICTION TEST.

Sample: Date:

Time	Temp.		Load		Speed			Friction	
	Air	Bearing	Total	Sq. In.	Counter	Total Ft.	R. P. M.	Pull Lbs.	Coef.

$$\text{Specification} = \frac{\text{Circum. journal in feet} \times \text{R. P. M} \times \text{load}}{\text{Troy grains oil}} > 325{,}000.$$

$$\text{Coefficient friction} = \frac{\text{Pull in pounds}}{\text{Total load}}.$$

Tests of Oil on Board Ship.—Attempts to improvise a testing machine on board ship will be found unsatisfactory. Tests have been made utilizing a lathe with mandrel to improvise a testing machine. The bearing surface thus used must necessarily be small and it will be found difficult to apply and measure a sufficient load for the test. Such apparatus can only give an approximate means of comparison with another oil of known good quality.

A sample of the oil under examination is sometimes used to lubricate the bearings of some part of the auxiliary machinery that is in constant use. This is not very satisfactory since it will be difficult to completely remove all particles of the old oil before beginning with the sample. A mixture of two different oils will frequently give very different results from those obtained with either one of them when used alone. An instance is on record where a mixture of two of the best known engine oils, made by different manufacturers, when used in a thrust bearing, caused a heavy deposit of paraffine, with consequent heating of the bearing. Either oil, when used alone, was perfectly satisfactory.

The only certain test of a lubricating oil is to use it for the lubrication of a bearing *under service conditions* and the test should be continued long enough to be conclusive. In a testing machine the bearing is set up close and the load applied is constant. In service there is clearance in the bearing and the load is irregularly applied, in extreme cases coming in the form of heavy blows.

Tests in an oil testing machine on shore are of value in indicating the probable character of a new brand of oil, but the final test must be that of actual service. In beginning the use of a new brand care must be taken to carefully clean out all the old oil.

In general it may be said that no lubricating oil should be purchased for use on board ship that has not been carefully tested, or the character of which is not guaranteed by a well-known brand, sold by a reputable dealer. Such brands are sold all over the world and it is poor economy to save a few cents on the gallon in the purchase of an oil that is of inferior quality. When using an inferior oil there is danger of overheating the bearings, causing damage that will, besides crippling the ship, result in a cost for repairs many times exceeding the amount saved in the purchase of the oil.

CHAPTER X.

THE SELECTION AND TESTING OF FUEL.

Fuel Economy.—Economy in fuel consumption is influenced in two ways. (1) By practicing the greatest possible economy in burning the fuel. (2) By selecting fuel that is best adapted to the conditions under which it is to be burned and that will develop the greatest amount of heat from a given quantity of the fuel. For commercial uses the last consideration is stated in another way, the desire being to select a fuel that will produce the greatest quantity of heat at the lowest cost. This consideration also holds in selecting a fuel for naval consumption, but it is not of paramount importance, since considerations of military efficiency often lead to the selection of a more expensive fuel on account of its higher heating value.

Selecting Coal.—The following qualities in coal govern its selection for use as a fuel:

(1) *Percentage of Moisture.*—The moisture present in coal represents a dead loss on account of its weight. Contracts for coal should be based on the net weight of dry coal.

(2) *Percentage of Volatile Matter.*—Boilers must have a large combustion chamber space in order to efficiently burn coal containing a high percentage of volatile matter. Such coal must also be handled differently in firing. Where the coal is fired by hand there should be no great variation in the percentage of volatile matter, since it will in that case be necessary to train the firemen anew with each variable lot of coal received.

(3) *Percentage of Ash.*—This is of importance as it affects the heating value and there is a further direct loss in cleaning fires. If the ash is fusible, making heavy clinkers, these choke the grate and prevent efficient combustion.

(4) *The Size of the Coal.*—Lump coal as a rule burns better than fine slack coal, though if slack coal cokes readily it will burn

efficiently. Some of the best American steaming coals come with a very small proportion of lump. Foreign coals should as a rule be avoided when there is not a large proportion of lump.

(5) *Heating Value.*—This is the most important quality of all. It is stated as the number of B. T. U's per pound of dry coal, or combustible. The term *dry coal* is used to signify that from which all moisture has been driven off, or the net weight, deducting for the percentage of moisture. The term *combustible* is used to designate the net weight, deducting for the percentage of ash.

For naval use the coal having the highest heating value should as a rule be selected, since the bad qualities usually increase in inverse proportion to the heating value, and military necessity impels us to fix upon a high grade of coal and require all contractors to furnish coal of this grade. This may also be the most economical policy in point of cost, since with an unknown brand of coal of inferior quality, the firemen who are unaccustomed to it, are likely unknowingly to waste enough to more than make up for the difference in cost.

For commercial purposes it is now becoming the general practice to contract for coal on the basis of its heating value per unit of cost. Where a low price can be thus obtained it is often possible in a stationary plant to make what arrangements are necessary to burn such coal for a long period of time, the arrangements and the contract being made with a view to producing the required power at the lowest price during the time for which the contract is to run.

Testing Coal.—Whatever may be the policy with regard to the quality of fuel that is to be used, it becomes of necessity to test the coal that is under consideration, either practically, by burning it under service conditions, or by careful tests in a properly equipped laboratory. For a test on shipboard, the only practicable procedure is to obtain as large a sample as possible and burn it on the grate of a boiler. The grate should be clean to start the test and the sample should be large enough to make a thorough test under full service conditions.

Sampling Coal for Test.—The object in taking a sample of coal is to obtain a small portion which represents as nearly as possible the entire lot of coal which is under consideration.

The original sample should preferably be collected in a large receptacle with cover attached, by taking small shovelsful from many parts of the car, barge, or vessel as it is being unloaded, or from as nearly all parts of a pile as possible, care being taken in all cases to secure practically the same amounts from the top, middle, and bottom of the pile. If sampling for a service test, the amount taken should be at least sufficient for a day's steaming under service conditions. If for a laboratory test, the first sample should amount to 500 pounds, or more, preferably 1000 to 2000 pounds. A separate sample should be taken from each 1000 tons or less delivered. The gross sample thus collected should contain the same proportion of lump and fine coal as exists in the whole shipment. It should be protected from the weather, in order to avoid gain or loss in moisture and should be immediately quartered down to a smaller sample, according to the following method:

The large lumps of coal and impurities should be broken down on a clean, hard, dry floor, with a suitable maul or sledge. The coal should be thoroughly mixed by shovelling it over and over and formed in a conical pile. The pile should then be quartered, using a shovel or board to separate the four quarters. Two opposite quarters should then be rejected and the remaining two broken down to a smaller size, mixed and reformed in a conical pile and quartered as before. This process should be continued until the lumps are $\frac{1}{4}$ inch in size, or smaller, and a one or two-quart final sample remains. *All* of this final sample should immediately be placed in one or more glass or metal cans and sealed air-tight. The outside of the can should be plainly labelled and a corresponding description placed inside the can.

In preparing a sample the work should be carried on as rapidly as possible in order to avoid loss of moisture through contact with the air.

Test for Moisture.—A portion is accurately weighed into an oven and dried for one hour at a temperature of about 105° F. Then reweighing, the difference gives the percentage of moisture.

Test for Volatile Matter.—A portion of *dry* coal should be weighed into a flask and heated to incandescence for about fifteen minutes. This will drive off the volatile matter and on reweighing, the difference gives the percentage of volatile matter. This test is sometimes carried out on an open tray, but this requires a very careful adjustment of temperature. If not hot enough some of the volatile matter will remain and if too hot some of the carbon will be consumed. In computing the percentage of volatile matter the calculation must be based on the weight of that portion of the sample of coal which is used, that is before either the moisture or the volatile matter is driven off.

Test for Ash.—A portion of the sample is weighed on a platinum dish, then heated in the open air until all combustible matter is burned. The weight of the residue, compared with that of the portion used gives the percentage of ash. The value thus obtained is the actual net value and is lower than it is possible to obtain when burning the coal on a grate, owing to the sifting through of fine particles of combustible with the ash. The loss due to this cause may, with careless firing, be very large and every effort should be made to reduce it as low as possible.

Measurement of the Heating Value of Fuels.

The methods of calculating the theoretical heating value of a fuel, its evaporative power, the amount of air required to burn it, the temperature of the furnace that it is possible to obtain and the method of conducting boiler tests have been given in other text-books.

This work will include under this heading only such apparatus as is used in the experimental determination of the heating power of a fuel.

Mahler's Calorimeter.—This instrument is perhaps the best known of the *bomb* calorimeters, in which a sample of the fuel under test is burned in a bomb immersed in water and the amount of the heat of combustion is measured by the rise in temperature of the water.

Principle of the Apparatus.—The combustible is placed in a closed bomb, made strong enough to resist heavy pressure. Oxygen is introduced under pressure and the gases of combustion are confined in the bomb. The bomb is immersed in the water of the calorimeter and the combustion is started by an ignition contrivance.

On account of the large quantity of oxygen the combustible burns completely and almost instantaneously. Its heat is given off and transmitted to the water and to the various parts of the apparatus, such losses as occur being easily estimated in all calorimetric operations. Owing to the rapidity of the operation most of the corrections that would be made in a physical laboratory become negligible; for example, that which takes account of the evaporation of the water.

Description of the Apparatus.—The apparatus is shown in Fig. 124, in which *A* is the water jacket, *B* the bomb of enamelled steel, *C* the platinum tray for holding the fuel, *D* the calorimeter, *E* an electrode, *F* a piece of fine iron wire for priming, *G* the support for agitator, *K* the mechanism of agitator, *L* the lever for operating, *M* a pressure gage for oxygen, *O* the flask of oxygen, *P* an electric battery, *S* the agitator, T the thermometer, *Z* a clamp for holding the bomb while removing or replacing the cap.

The bomb is of forged steel of the best quality. It is of about 650 cc. capacity, with walls 8 mm. in thickness. This capacity is such as to assure in all cases perfect combustion of the fuel by a considerable excess of oxygen. It also enables the bomb to be used for experiments on gases and gas mixtures containing as much as 70% of inert matter, where it is necessary to take a large quantity if a rise in temperature is to be obtained sufficiently great for satisfactory results.

The bomb is nickel-plated on the outside. On the inside a coat of enamel preserves it against the action of nitric acid, which is always formed during the combustion. The bomb is closed by a cap, screwed down on a lead gasket. This cap has a valve in its center, with screwed nozzle for connecting to the flask of oxygen. It is also pierced by a platinum electrode, well insulated, prolonged on the inside by a platinum rod *E*. A second platinum rod, fixed to the cap, sustains the platinum tray *C*, which carries the sample of fuel under test.

A spiral of very fine iron wire connects *C* with *E*, coming in contact with the fuel when the bomb is charged. When the current is turned on this wire is heated to redness, then burns in the atmosphere of oxygen, igniting the fuel.

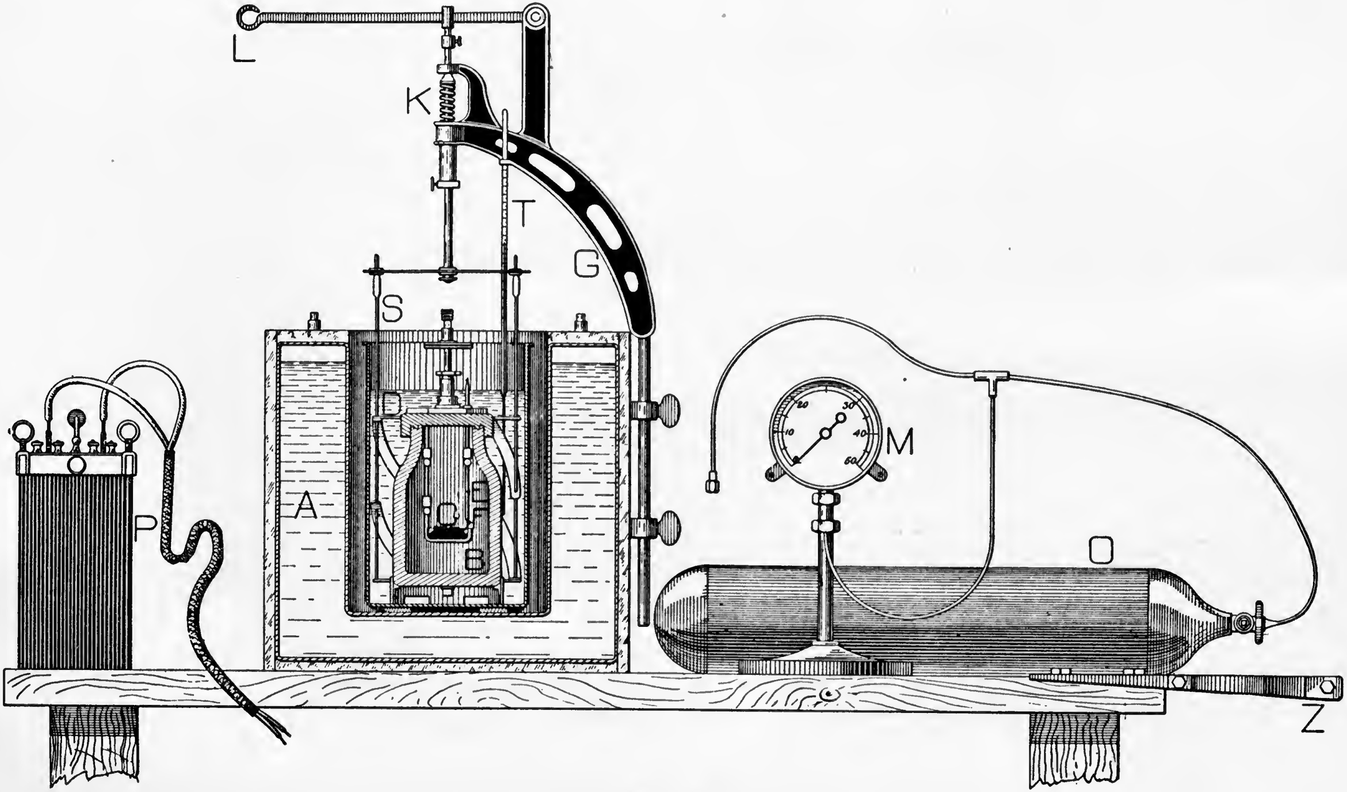

FIG. 124.

The agitator consists of vanes, carried on a central rod with spiral thread passing through a fixed nut. It is operated by a lever which permits the operator to systematically stir the water in the calorimeter, thus ensuring an even temperature.

The valve on flask does not have a fine enough adjustment to permit gradual introduction of the oxygen. A second valve, not shown in the figure, having a very fine adjustment, is placed in the connection to tank for this purpose. The figure shows a flask for oxygen containing about 1000 liters. It is ordinarily supplied in this manner at about 120 atmospheres pressure. Since the pressure convenient for the combustion of one gram of coal is only about 25 atmospheres, there is thus a provision for about 60 tests.

A high-grade thermometer reading to 1/50° C., an electric battery of 12 volts and 2 amperes capacity, and a stop-watch complete the apparatus.

Determination of the Calorific Value.—The following method of procedure for determining the calorific value of a solid or liquid combustible is that given by the inventor of the apparatus.

One gram of the fuel is weighed and placed in the tray *C*. The small iron wire *F* of a known weight is adjusted in contact with the fuel and serves as a primer. After having introduced all in the bomb, it is placed in the clamp *Z* and the cap is screwed on hard by means of a heavy hexagonal wrench.

The valve on cap is then opened, the second valve for fine adjustment having first been closed. The valve on flask is opened and then, very slowly, the adjusting valve, until the gage indicates 25 atmospheres. After having closed all valves the tube is then disconnected.

The bomb, thus prepared, is placed in the calorimeter *D*. The thermometer *T* and agitator *S* are placed in position and a measured quantity of water, sufficient to completely cover the bomb, is poured in. This quantity will be about 2200 cc., which is the amount used by M. Mahler in his experiments. The water is stirred for some minutes, in order to let the whole system arrive at an even temperature, then observations are commenced.

The temperature is noted from minute to minute for 5 minutes, in order to fix the rate of variation of the thermometer before ignition. At the end of the fifth minute contact is made and the fuel fired by means of the battery connected to the electrode *E* and to a point on the valve. Ignition takes place immediately.

The temperature is noted half a minute after the contact is made, then at the end of a minute, and the observations are continued from minute to minute up to the point where the thermometer commences to fall regularly. This is the maximum.

The observations are then continued for five more minutes in order to fix the rate of variation of the thermometer after it reaches the maximum.

The principal data for the calculations are then at hand, including data for the correction for loss of heat by radiation from the calorimeter. This correction is made according to the following rules, true between large limits, even where the amount of contained water is not more than half the water equivalent of the calorimeter.

(1) The rate of decrease of temperature, observed after reaching the maximum, represents the rate of loss of heat from the calorimeter before reaching the maximum, provided the fall in temperature is not greater than 1° C. per minute.

(2) If the fall in temperature per minute is greater than 1°, but less than 2° C., the figure representing the rate of decrease, when diminished by 0.005, gives the desired correction.

The two preceding paragraphs cover all cases. It is possible also, and that without altering the accuracy of the experiment, to consider the variation during the first half of the minute following the ignition as that which exists at the minimum temperature.

During the whole experiment, the observer should continually operate the agitator.

When the observations are ended, the valve on the bomb is first opened, then the bomb itself. The bomb will contain the ordinary products of combustion, composed principally of carbonic acid gas and water, a considerable quantity of free oxygen, and an appreciable quantity of nitric acid formed during the combustion from such nitrogen as was present in the bomb at atmospheric pressure before it was charged with oxygen.

The interior of the bomb is washed with a small quantity of water to remove the liquid acid formed during the explosion. The amount of nitric acid is then determined by a simple chemical analysis, and the calorific value, h, is determined from the formula:

$$h = r(1+a)(P+P') - (230p + 1600p'),$$ where

r = the rise in temperature.
a = the loss of temperature during the experiment.
P = the weight of water in the calorimeter.
P' = the water equivalent of the calorimeter.
p = the weight of nitric acid.
p' = the weight of the iron ignition wire.
230 = the heat of formation of one gram of nitric acid.
1600 = the heat of combustion of one gram of iron.

In making a test of coal no separate account is taken of the quantity of sulphuric acid, resulting from the oxidation of the small quantity of sulphur present in the sample, such acid being treated as nitric acid. The error is negligible in ordinary work. It may be noted that the sulphur being entirely oxidized and transformed into sulphuric acid, the bomb gives a means of evaluating it. For this purpose, in order to give a sufficient quantity for satisfactory operation, it will be better to burn 2 grams under 30 atmospheres, without taking readings of the thermometer.

If desired, account may be taken of the heat generated by the formation of sulphuric acid, which is 0.73 calories per gram of acid.

In testing a substance containing but little hydrogen, coke for example, so little water of combustion is formed that the quantity is insufficient to dissolve the acid. It is then best to place in the bottom of the bomb a few cc. of water, which must be taken into account in making the calculations.

The procedure is the same for a liquid as for a solid. If the liquid gives off vapors it is well to weigh the sample in a closed vial, having thin points through which is passed the film of iron wire. At the moment of introducing the vial into the bomb, care should be taken to break these points in order to bring the oxygen into contact with the liquid.

M. Mahler has also used the apparatus for the determination of the calorific value of various gases. After having exhausted the bomb and measured the pressure remaining, the gas is introduced for the first time. The bomb is then exhausted a second time, after which it is filled with the gas at barometric pressure and at the temperature of the laboratory. The oxygen is then added and the procedure is carried on in the same manner as for solid and liquid fuels.

The determination of the calorific value of gases offers a special difficulty. If diluted with too great a quantity of oxygen, the mixture will not be combustible. For illuminating gas, 5 atmospheres will be sufficient. For producer gas, half an atmosphere only should be used, measured on a mercurial manometer.

Determination of the Water Equivalent of the System.—In order to determine the value of P', the term representing in water the exact equivalent of the system, the simplest method is to perform a double experiment as follows:

Burn in the bomb a known weight, one gram for example, of a combustible or fixed composition, such as fuel oil, and with 2300 grams of water in the calorimeter. Then burn the same weight of the same combustible with only 2100 grams of water in the calorimeter.

There will then be two equations between which the heat of combustion of the fuel may be eliminated and the value of the water equivalent may be deduced.

Example.—The following example of the work of the apparatus is given by M. Mahler:

The fuel under test is a sample of colza oil. An approximate analysis gave:

Carbon	77.182
Hydrogen	11.711
Oxygen and Nitrogen	11.107
	100.000

Weight of sample tested, 1 gram.

Water in calorimeter, 2200 grams.

Water equivalent of the bomb and accessories, previously determined, 481 grams.

The apparatus being prepared as above directed, a little time is allowed to elapse for the temperature to equalize, then the stop watch is started and the temperatures are noted as below.

Preliminary Period.

0 minutes	10°.23
1 "	10°.23
2 "	10°.24
3 "	10°.24
4 "	10°.25
5 "	10°.25

$$r_o=\frac{10^\circ.25-10^\circ.23}{5}=0^\circ.004.$$

The combustible is then fired.

Period of Combustion.

5½ minutes	10°.80
6 minutes	12°.90
7 "	13°.79
8 "	13°.84 (max.).

Final Period.

9 minutes	13°.82
10 "	13°.81
11 "	13°.80
12 "	13°.79
13 "	13°.78

$$r_t=\frac{13^\circ.84-13^\circ.78}{5}=0^\circ.012.$$

No further readings of the thermometer are taken.

The change in temperature has been $13^\circ.84-10^\circ.25=3^\circ.59$.

Corrections.—The apparatus has lost during the minutes (7, 8) (6, 7) a quantity of heat measured by

$$\frac{13^\circ.84-13^\circ.78}{5}\times 2=0^\circ.012(1)\times 2=0^\circ.024.$$

During the half minute ($5\frac{1}{2}$, 6) it has lost a quantity of heat represented by

$$(0^\circ.012-0^\circ.005)\times\tfrac{1}{2}=0^\circ.0035.$$

And during the half minute (5, $5\frac{1}{2}$) it gained

$$\frac{10^\circ.25-10^\circ.23}{5}\times\tfrac{1}{2}=0^\circ.004(2)\times\tfrac{1}{2}=0.002.$$

Finally, the loss during the minute (5, 6) is

$$0°.0035 - 0°.002 = 0°.0015.$$

To sum up, the loss during the whole experiment has been

$$0°.024 + 0°.0015 = 0°.0255,$$

a quantity which should be added to the 3°.59 already found.

The corrected rise in temperature is then 3°.615, neglecting the ten thousandths.

The quantity of heat observed is therefore

$$(2200 + 481) \times 3°.615 = 9691.8 \text{ calories.}$$

In order to obtain the final result we subtract from this figure

(1) The heat of formation of 0.13 gram of nitric acid, determined volumetrically, $0.13 \times 230 = 29.9$ cal.

(2) The heat of combustion of 0.025 gram of iron wire, $0.025 \times 1600 = 40.0$ cal.

Amount to be deducted, 69.9 cal.

The final result is then $9691.8 - 69.9 = 9621.9$ calories.

Or, for a kilogram of oil, 9621.9 kilo-calories.

To transform this result into B. T. U. per pound of oil, multiply by 1.8.

$$9621.9 \times 1.8 = 17{,}319.42 \text{ B. T. U.}$$

Applying the formula $h = 14{,}500(C + 4.28(H - O/8))$ we obtain for h the theoretical value 17,597.

The dimensions of this apparatus are such that it is possible to so regulate the conditions of a test as to cancel the minor corrections. If a is the correction due to the loss of heat during the operation, it will be seen from inspection of the equation on page 237, that it will not be necessary to take into account such corrections if

$$230p + 1600p' = a(P + P'),$$

since the equation then becomes $h = r(P + P')$.

Since the value of p depends chiefly on the quantity of nitrogen contained in the bomb before charging with oxygen, it will, when testing solid or liquid fuel, be practically constant. p' is variable at the pleasure of the operator within small limits, but may also be given a constant value. It is possible then to so regulate the values of a and P that the above equation will be sufficiently true in all ordinary operations. This has been done by M. Mahler with the apparatus under his own direction. For example, the calorific value of colza oil under examination was found to be 9621.9 calories. Using the values 3.59 and 481 which were found for r and P' respectively, we have

$$r(P+P') = 3.59(2200+481) = 9624,$$

which approximates very closely to the exact result obtained.

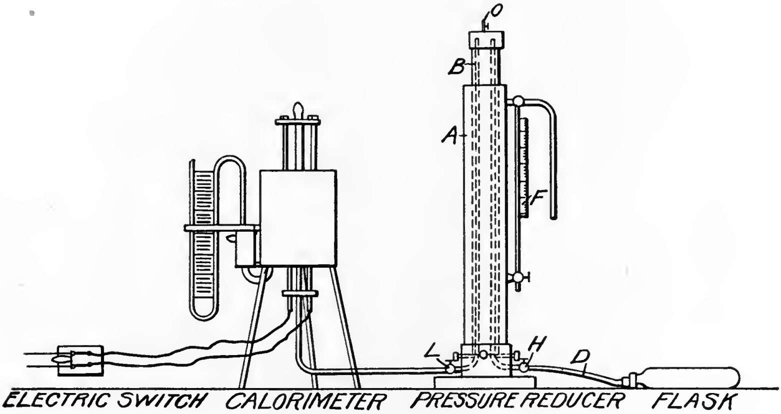

FIG. 125.

This approximate method is that usually followed in testing a solid or liquid fuel. If somewhat greater accuracy is desired, the value, $p=0.13$, found in the above experiment may be used with the observed values of a, p' and P. In testing a gas, where the proportion of nitrogen is large, it will be necessary to evaluate the quantity of nitric acid.

Carpenter's Improved Coal Calorimeter.—In construction this instrument may be compared to a thermometer, in the bulb of which combustion takes place, the heat of combustion being absorbed by the liquid contained in the bulb, and the amount of this heat being proportional to the expansion of the liquid. The expansion is measured by the rise of the water level in an open glass tube, from which the number of B. T. U's absorbed by the liquid is determined. As set up for use, the complete apparatus is shown in Fig. 125 and consists of the calorimeter proper, a flask of oxygen, a pressure reducer for oxygen, and the electric firing connections.

Description.—Referring to Fig. 126: The combustion chamber, *a,* is supplied with oxygen through tube *b,* the products of combustion being conducted through spiral tube *c, c.* The tube ends in a hose nipple *d,* from which a hose connection is made to a small chamber *e,* attached to the outer case, and fitted with a manometer *f* for measuring the pressure of combustion. A plug *g,* with pin hole, is attached to the chamber for the discharge of gases. Surrounding the combustion chamber *a,* is a large closed chamber *h,* filled with water and connected to the open glass tube *i.* The level of water in *i* is measured on the scale *j.* Above the water chamber is a diaphragm *k* which, by means of the screw *l,* is used to adjust the zero level to any desired point in the open glass tube *i.* Glass is fitted at *m, n,* and *o,* so that the process of combustion may be observed. A screw plug *p,* is removed when filling or emptying the water chamber. The plug *q,* which stops up the bottom of the combustion chamber, carries a dish *r,* in which the fuel for combustion is placed, and two vertical adjustable insulated wires *s, s,* the upper ends of which are joined by a thin platinum wire. These wires are connected to an electric battery, or circuit, the current of which is used for firing the fuel. A silver mirror on top of the plug deflects any radiating heat. The plug itself is so constructed and fitted that little or no heat is transferred to the outside, but practically all heat is rapidly transmitted to the surrounding water. The instrument is supported on strips of felting *u* and *v,* and fits into a nickel-plated case, the inside of which is polished to reduce radiation. Eight inches water pressure has been found sufficient for combustion.

The sample of coal to be tested weighs about 1½ grams and is burned in the combustion chamber in an atmosphere of oxygen, kept at a constant pressure of 8 inches of water. Oxygen is received in the laboratory in heavy flasks under about sixty atmospheres' pressure. This pressure, in the ordinary form of the apparatus, is reduced by throttling to the low pressure used for com-

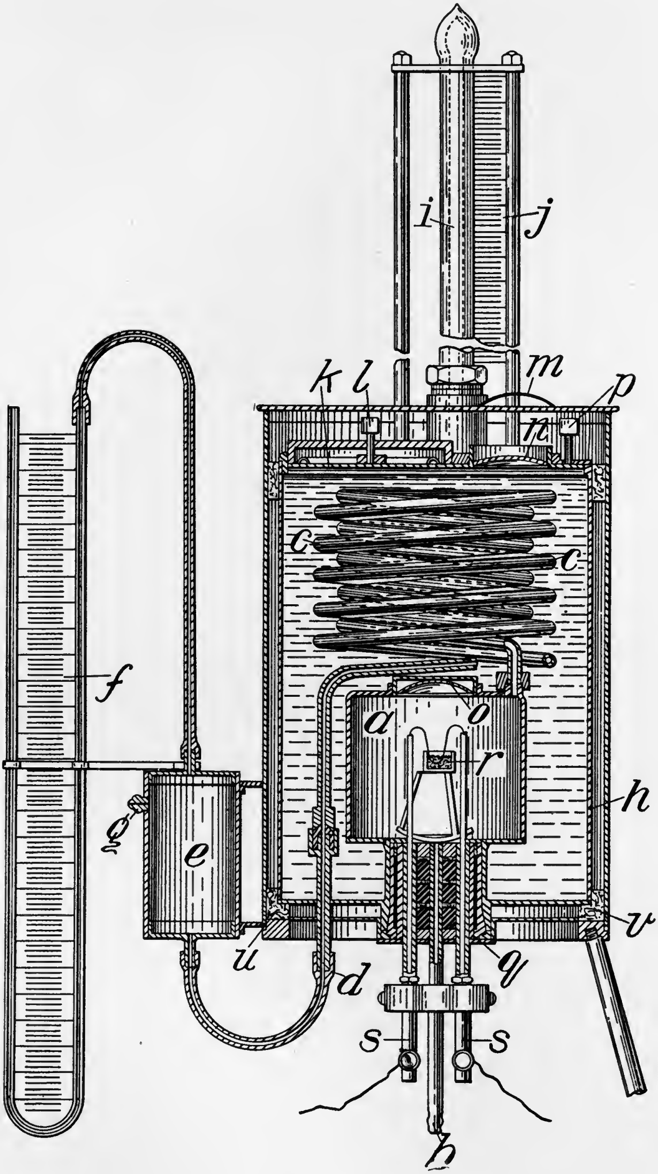

FIG. 126.

bustion. The reduction is so great, however, as to make perfect regulation with a simple throttle valve very difficult. It has been found of great advantage to introduce a pressure reducer between the flask and the combustion chamber. This apparatus, as designed by Lieutenant-Commander F. D. Karns, U. S. N., and built at the Naval Academy, is shown in Fig. 127, and is described as follows:

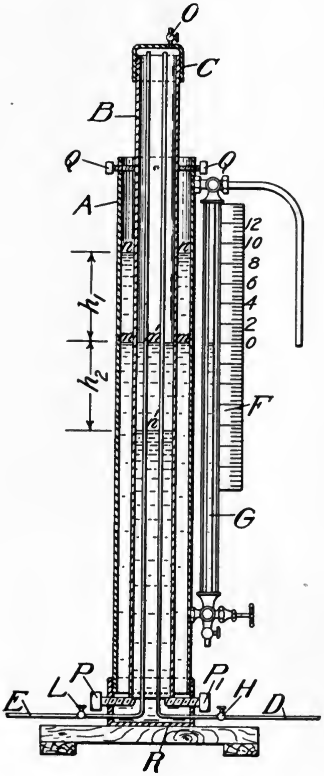

FIG. 127.

Pressure Reducer for Oxygen.—Referring to Fig. 127: *A* is a cylindrical chamber open at the top and closed at the bottom by a cap *R*. *B* is a 3-inch pipe lowered into *A*, with its lower end resting on three studs *P*, as shown. The upper end of *B* is closed by the cap *C*. Studs *Q* serve to keep *B* upright. Two ¼-inch pipes, *D* and *E*, enter the lower end of *A*, pass up through the inside of *B*, with their open ends terminating with ¼ inch of cap *C*. Water fills the chamber *A* about two-thirds full and, with valve *O* open, rises to the same level *m*, *m′*, *m*, in *A* and *B*, the level being at all points under atmospheric pressure. Oxygen from the flask under pressure is admitted through *D* to the clearance space above the water level in *B*, creating a pressure with valve *O* closed that forces some of the water out of *B*, to the level *n′*, thereby causing the level in *A* to rise to the level *n*, *n*, where a balance is established against the pressure of oxygen in *B*. The rise of the water is noted in the gage glass, and the corresponding pressure in inches of water is read off on the attached scale *F*. The pressure in *B* is controlled by means of the throttling valve *H* and maintained at 12 inches water pressure, which is found to be that best suited to the test requirements. From *B* the oxygen is conveyed through the pipe *E* and valve *L*, where it is further throttled and kept at a pressure of 8 inches of water as it discharges to the combustion chamber of the calorimeter. Valve *O* is for the purpose of placing *B* under atmospheric pressure for marking off the zero water level. It also serves to permit the air in *B* to escape, so that the clearance space may be completely filled with pure oxygen before beginning a test.

The scale *F* is graduated to read in inches water pressure, the value corresponding to any observed water level in the gage glass being determined as follows:

Referring to Fig. 127:

Let A_1=area of cross section in *A* (annular space).
" A_2=area of cross section in *B* (excluding small pipes).
" h_1=amount water level rises in *A*.
" h_2=amount water level falls in *B*.

Then $h_2 \times A_2 = h_1 \times A_1$, and $h_2 = \frac{h_1 \times A_1}{A_2}$.

$$\text{Head, in inches, } = h_1 + h_2 = \frac{h_1 \times A_1}{A_2} + h_1 = \frac{h_1(A_1 + A_2)}{A_2} = h_1 \times K,$$

since A_1 and A_2 are both known constants. h_1 is measured by the rise of the water in the gage glass. For purposes of graduating the scale, the "head" is marked off and indicated for heights h_1, increasing by one quarter of an inch. Assume the simplest case, in which $A_1 = A_2$. Then head $= 2h_1$; and if the actual rise of the water is one inch, the corresponding water pressure is two inches, and would be so marked on the scale.

Method of Conducting a Test.—(1) *Preparation of the Sample.*—Select an accurate sample by a system of quartering, reduce it to powder, place in a dry asbestos cup of known weight and weigh accurately.

(2) *Adjustment of Gas Pressure.*—Open valve *O* and adjust zero point of scale *F* to water level in gage glass. Exhaust air from clearance space of *B,* taking care that no water enters the small pipes, and then close *O.* Admit oxygen from flask through pipe *D* and valve *H* until water level rises to 12 on scale *F,* and keep it there by closing or manipulating *H.* During this time valve *L* is kept closed.

(3) *Firing the Charge.*—Introduce coal sample into calorimeter, raise platinum wire above coal, make battery connection, and as soon as heat from wire causes water in glass tube to begin to rise, turn on oxygen gas (by opening valve *L* at the reducer), and fire charge by pulling heated wire down. The instant coal is lighted, break electric connection and note *first scale reading* and time. The gas pressure in the combustion chamber must be kept constant at eight inches during the test, and this is done by properly throttling the valve *L,* noting the pressure indicated by the manometer attached to the discharge side of the calorimeter.

(4) *Actual Scale Reading.*—Watch the combustion, which usually requires about 10 minutes for each gram of coal, and when completed note *second scale reading* and time. The difference between second and first scale readings is the "actual" scale reading.

(5) *Correction for Radiation.*—Allow the calorimeter to stand for a time equal to, and under the same conditions as, that of combustion, except that the oxygen gas is shut off, and note *third scale reading* and time.

(6) *Corrected Scale Reading.*—The difference between *second and third scale readings* is the correction for radiation, and must be added to the "actual" scale reading to get the "corrected" reading.

(7) *To Find Calorific Value.*—From the calibration curve find the heat value of the sample in B. T. U. corresponding to the "corrected" scale reading, and divide the B. T. U. thus obtained by the weight of the sample in pounds. The result will be the calorific value in B. T. U. per pound of coal.

(8) *To Determine the Ash.*—Weigh the cup in which combustion took place, with its contents. From this weight subtract the known weight of the cup, and the difference will be the weight of the ash in the sample.

General Instructions.—(1) To prepare for another test, remove calorimeter from outside case and immerse in cold water for a few minutes, care being taken to prevent any water entering tubes or combustion chamber.

(2) It is important that the water in the calorimeter should be free from air and that the oxygen gas be supplied at a constant pressure.

(3) In burning coals having a large percentage of volatile matter, the water resulting from the combustion may affect the rate of flow of the burned gases, and thus change the reading of the manometer. In this case the result of the test is of uncertain value.

(4) The temperature of the calorimeter at the beginning of a test should be a few degrees above that of the surrounding atmosphere.

(5) Complete combustion will always be obtained when asbestos cups are used.

(6) An asbestos cup is made by wrapping a piece of sheet asbestos about the end of a small cylinder, and using a weak glue to hold it in cup form. The cup is then heated to a white heat in order to remove any combustible matter. The cup when weighed must be dry.

(7) Oxygen for combustion is usually purchased in condensed form in heavy steel flasks, but in case the supply should at any time become exhausted, it may be made by heating a mixture of about equal parts of dioxide of manganese and chlorate of potash placed in a closed retort.

(8) Electric current for heating the platinum wire may be taken from a dry battery or reduced from a lighting circuit.

(9) The calorimeter will give good results only when all the conditions under which the calibration was made are maintained during the test.

Calibrating the Calorimeter.—(1) *Preparation of Sample.*—Reduce some charcoal from sugar or soft coal to powder, fill a porcelain or clay crucible one-third full, cover it tightly, and heat it by means of a blast lamp or a forge fire for half an hour. When cold, grind it in a mortar to very fine powder. Repeat this operation for other samples to be tested.

(2) *To Free the Water in the Calorimeter from Air.*—Connect the glass tube opening by rubber hose with a smaller vessel filled with water. Boil the water in the calorimeter, using a burner and protecting the calorimeter by a thin sheet of asbestos paper. All air and steam will pass to the smaller vessel, which must be kept boiling until the calorimeter has cooled off. Then remove rubber connection and insert glass tube, taking care that no air is trapped. The instrument is now ready for calibration.

(3) *Testing the Sample.*—Follow the instructions already given under "Method of Conducting the Test." The difference between the weight of cup and sample, and the weight of cup and ash, is the weight of pure carbon burned. Multiply the weight of pure carbon burned by 14,600 and obtain the number of heat units in the sample. Find this for several weights.

(4) *To Construct the Curve of Calibration.*—With the "corrected" scale readings as ordinates, and the corresponding heat values of the several samples burned as abscissæ, make points in crossing and through these points draw a fair curve. All the points should lie on a straight line whose origin is at zero.

The calibration curve, shown in Fig. 128, was determined as the result of a series of tests made in the Engineering Laboratory.

The Parr Standard Calorimeter.—This instrument, devised by Professor S. W. Parr, of the University of Illinois, is a bomb calorimeter in which the fuel under test is placed in the bomb together with chemicals containing the constituents necessary for its complete combustion and for the further absorption by chemical combination of the gases given off in the process of combustion.

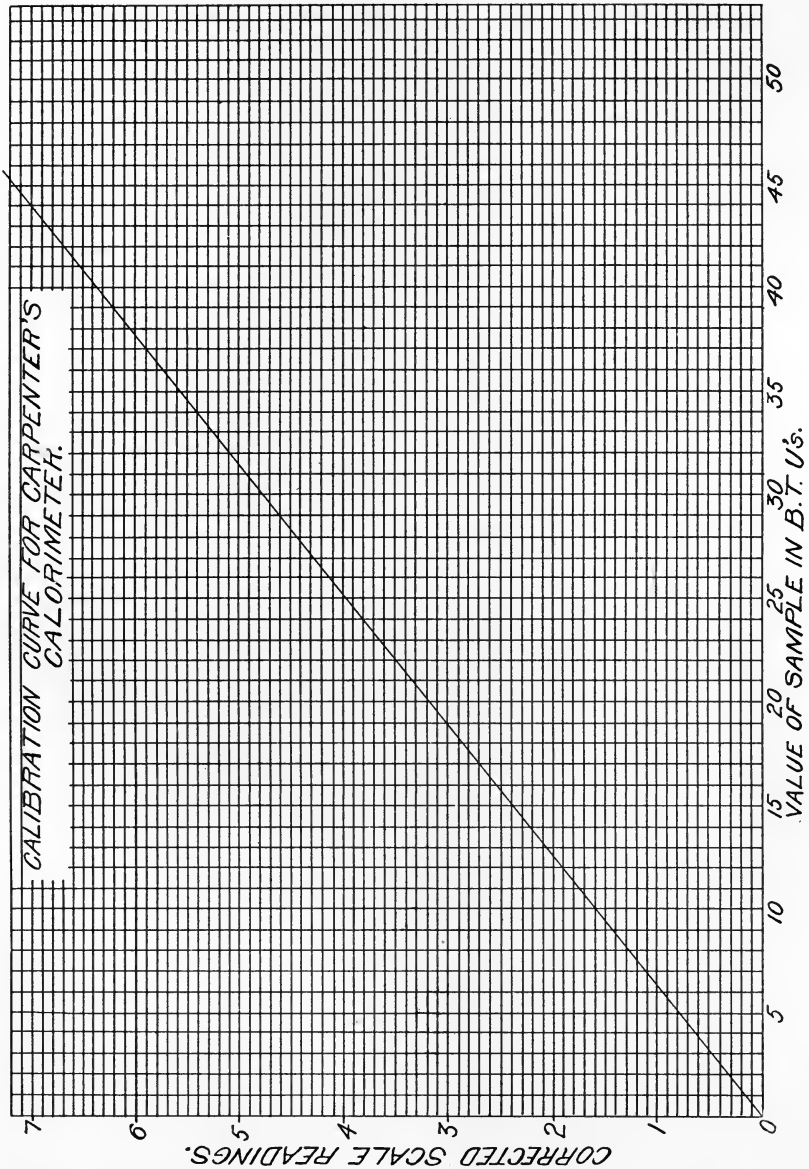
CALIBRATION CURVE FOR CARPENTER'S
CALORIMETER.
0
5
10
15
20
25
30
35
40
45
50
VALUE OF SAMPLE IN B.T.U's.
0
1
2
3
4
5
6
7
CORRECTED SCALE READINGS.

FIG. 128.

The instrument is shown in Fig. 129. *A* is a can in which, for the test, two liters of water are placed. *B* and *C* are the outer and inner walls of the containing vessel, divided by an air space between them. To further prevent loss of heat by radiation, they are made of non-conducting material.

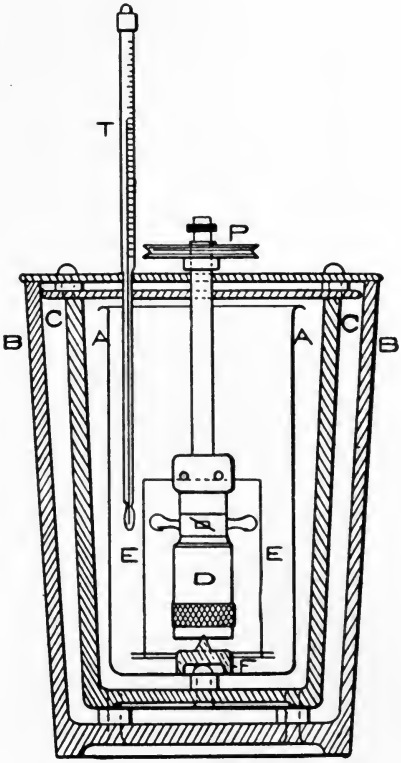

FIG. 129.

Combustion takes place in the bomb *D*. This rests on a pivot and is rotated at a speed of about 100 revolutions per minute by means of a small motor. This is for the purpose of ensuring a uniform temperature of the water, which is thus stirred by means of the vanes shown in the figure.

Two forms of ignition are used. As first designed, the charge was ignited by dropping into the bomb a small piece of red-hot wire. The bomb as fitted later for electrical ignition is shown in section in Fig. 130. *A* is the shell of the bomb. *B* is the tube whose lower end fits gas and water tight over *A*. *F* is a cap for securing *B*. *C* is the bottom of the bomb, secured gas and water tight by the plug *D*. *G* is the ignition wire, which passes through tube with insulated gas-tight fittings to contact point at *K*.

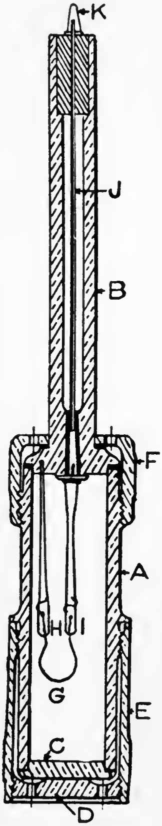

FIG. 130.

Operation.—This instrument is used for soft coal, anthracite or coke, and for oil fuels. For each of these different classes the charge of fuel and chemicals is made up in different proportions, as directed, and the proper constant, as determined by the inventor, is applied for the calculation of the desired result.

To prepare the cartridge for filling, dry all the parts perfectly inside and out; see that the inner bottom *C* with gasket is properly seated, screw on the outer bell *E*, then with the spanner wheel screw up *firmly* the outer bottom *D* and place on a sheet of white paper.

For coals under test, the sample is in all cases prepared by grinding in a mortar and passing through a 100-mesh sieve. Coals containing more than 2½ or 3 per cent of water should be dried before testing. In such cases the exact charge of the commercially dry coal is weighed out and dried for an hour at a temperature of 220°-230° F., then transferred to the cartridge. One-half gram constitutes the charge for all varieties of coal.

The apparatus as supplied by the manufacturers includes the various chemicals that are to be used for testing the different varieties of fuel, as well as the instruments necessary for measuring or weighing them.

Procedure for Soft Coals.—One full measure of sodium peroxide, from the bottle labelled "Chemical," is put in the cartridge and the charge of coal added; then, one gram of finely ground chemically pure chlorate of potash, from the bottle labelled "Chlorate Mixture." It is well to have the latter follow the coal and thus clean out the vessel in which it was weighed.

The stem and top *B*, Fig. 130, with the terminals *HI*, having a loop of fine ignition wire extending about an inch below, are put in position, and the cap *F* screwed firmly in place. Shake vigorously to thoroughly mix the contents. When the mixing is complete, tap the cartridge lightly to settle the contents and to shake all the material from the upper part of the cylinder. Put on the spring clips with vanes. The cartridge is now put in place, the can with water being already in position. Adjust the cover. Insert the thermometer so that the lower end of bulb will be about midway towards the bottom of the can, place the pulley on the stem and connect with the motor. The cartridge should turn towards the right, so as to deflect the currents downward.

After about three minutes, the reading of the thermometer may be taken, giving the initial temperature of the water. This should, for good work, be about 3° Fah. below the temperature of the atmosphere. The current is then turned on, igniting the charge. Combustion will be indicated by a rapid rising of the temperature of the water, which should reach its maximum in from four to five minutes. During the combustion the revolving of the cartridge must be kept up continuously.

Calculation of Results.—The initial temperature is subtracted from the maximum temperature to give the rise in temperature of the water. From this is subtracted the correction factor for the heat of the wire and chemical, as indicated on the small bottle of chlorate mixture. The remainder is multiplied by 3115, and the product thus obtained is the number of B. T. U. in a pound of the fuel.

The factor 3115 is deduced as follows: The water used, plus the water equivalent of the calorimeter is 2134 grams. In the reaction that takes place at the time of combustion, 73% of the heat produced is due to the combustion of the coal, and 27% is due to the heat of combination of CO_2 and H_2O with the chemical. If now $\frac{1}{2}$ gram of coal causes 2134 grams of water to rise r degrees, and if only 73% of this is due to combustion, then $0.73 \times 2134 \times 2 \times r =$ rise in temperature that will result from the combustion of one gram of the coal. $0.73 \times 2134 \times 2 = 3115$. From this we see that one gram of the coal will raise 3115 grams of water through r degrees, or one pound of the coal will raise 3115 pounds of water through r degrees.

After using, dismantle, and thoroughly clean the instrument. Remove the thermometer, pulley, and cover; then take out the can and contents entire, so that the lifting out of the cartridge will not drip water into the dry parts of the instrument. Remove the spring clips and unscrew the ends. It is better to loosen the bottom *D*, Fig. 130, and unscrew the entire bell *E* for cleaning. The fused mass is easily driven out at the bottom by aid of a short metal rod, or it may be dissolved out by immersing the cartridge and contents in hot water. The cartridge and ends, when rinsed clean and thoroughly dried, will be ready for another test.

Procedure for Anthracite or Coke.—The method is the same as for soft coal, except that instead of 1 gram of "Chlorate Mixture," $1\frac{1}{2}$ grams of a persulphate mixture, containing 2 parts potassium persulphate (KSO_4) to 1 part ammonium persulphate (NH_4SO_4), from the bottle labelled "Special Chemical" is substituted. With this exception, the procedure and method of calculating results is the same as before. The correction factor for the "Special Chemical" and fine wire is marked on the label of the "Special Chemical" bottle.

Procedure for Oil Fuels.—Prepare a small light 15 cc. weighing flask with perforated cork and dropping tube with common rubber bulb cap. Fill the flask about $\frac{2}{3}$ full of oil and weigh carefully. Place in the cartridge $\frac{1}{4}$ measure of ordinary "Chemical" (sodium peroxide) and $1\frac{1}{2}$ grams, exactly weighed out, of the "Special Chemical" (persulphate mixture). Then, by means of the dropping tube, add about 0.3 gram (25-30 drops) of oil. Add one measure of ordinary "Chemical." Screw on the top, shake well, place in the calorimeter, and ignite as usual. Weigh back the flask carefully and determine the amount of oil taken by difference. Compute the result by formula instead of using a factor, thus: Correcting as before for the wire and "Special Chemical," let r = the corrected rise in temperature; then

$$\frac{r \times 0.73 \times 2134}{\text{wt. of oil in grams}} = \text{B. T. U. per pound of oil.}$$

Junker's Calorimeter.—This is an apparatus especially designed for gaseous fuels. It is shown in elevation and section in Figs. 131 and 132. The principle of its action is based on the heating of a current of air passing around a jet of burning gas whose heating value is to be determined. A combustion chamber *A* has a burner at the center which is connected to the source of supply through an accurate gas meter. The combustion chamber is surrounded by a water jacket *BB*, this jacket being again surrounded by a closed annular air space *C*, through which the air cannot circulate, and fitted for the purpose of preventing loss by radiation. The nozzle *D* in the center of the container *E* is connected to any water supply; *F* is an overflow pipe, the discharge from which should be visible,

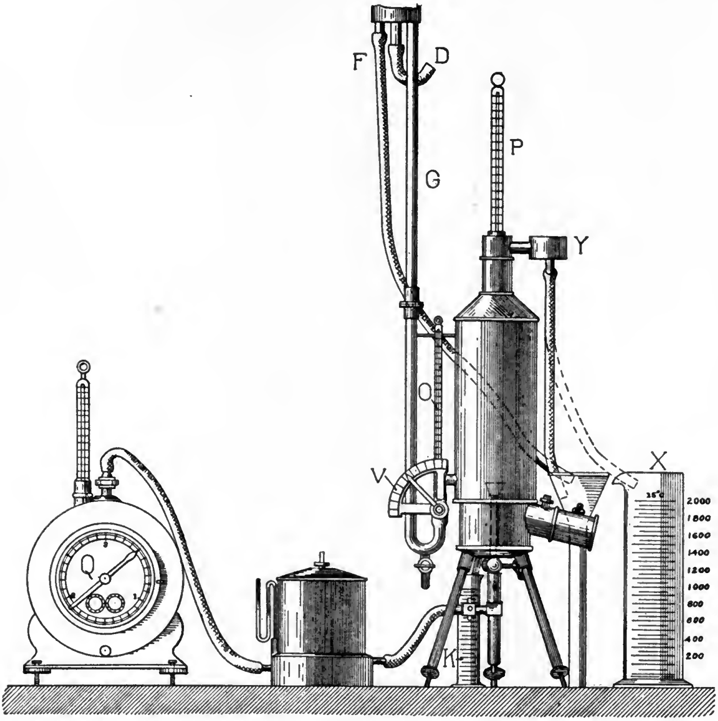

FIG. 131.

but need not be measured, as this water does not form part of the quantity heated.

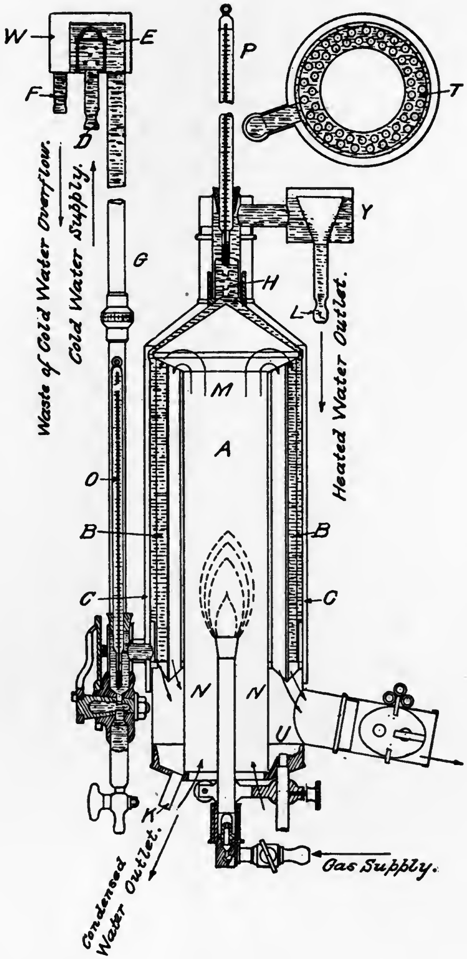

FIG. 132.

The cold water enters the container at *D,* passes down through *G, H,* and leaves the jacket at *L,* while the combustion gases enter at *M,* through a series of small vertical tubes *T,* in the water jacket, pass down and leave at *N.* The gas and water move in opposite directions, so that all the heat is transferred to the water, and the waste gases leave the apparatus approximately at atmospheric pressure. The temperature of the water entering and leaving can be read by thermometers O and P. A third thermometer gives the temperature of the products of combustion from the gas jet, and a fourth that of the gas in the meter Q. The water produced by the combustion of the hydrogen in the burning jet and the oxygen of the air forming steam is condensed in the calorimeter, thus giving up its latent heat. This condensed water is a factor in the determination of the *higher or lower heating* value of the gas, consequently it is measured by running it into the graduate K. The cocks should be opened for a short interval before a test in order to clear the pipes of air and obtain water only.

Operation.—Water is run into D until it passes through the jacket and flows out at the discharge L. The gas is lighted at the burner, inserted in the calorimeter, and the size of the flame or quantity of gas passing to it is carefully adjusted by the gas supply stop cock. The air for combustion is supplied from the open bottom, as shown by the arrows. The products of combustion move to the upper part of the calorimeter, and descend through a number of small vertical copper tubes, finally emerging at N, and go to waste through U. The heat in the products of combustion is absorbed by the water which circulates round the tubes as it passes through the calorimeter.

The cock V (Fig. 131) regulates the quantity of circulating water which is measured by the graduated glass X, and by varying the opening of V before getting underway for the test the difference of temperature between inlet and outlet is approximately determined at the beginning. This adjustment is made so that the circulating water during the passage of the gases absorbs all the heat given out, and the products of combustion at release are practically at the temperature of the atmosphere.

It is necessary that the flow of circulating water should be, as nearly as possible, constant. In order to accomplish this, the water entering at D supplies the tank with a little more than is necessary, and this surplus overflows into the space W in the tank and thence into the drain pipe. Similarly an overflow is provided at Y. By this means a constant head is maintained, and a constant rate of flow obtained through the calorimeter. The water, in its passage at entrance, passes through the thermometer O, from which the initial temperature is obtained and the final temperature by the thermometer P.

Having obtained the pounds of circulating water per minute, the rise in temperature during the passage through the calorimeter, and the number of cubic feet of gas used per minute, the calorific value h, of the fuel is obtained from the formula

$$h=\frac{WT}{G}$$

where W = pounds of circulating water measured,
T = difference in degrees F. of the initial and final temperature of the circulating water,
G = cubic feet of gas used.

For oils a special burner is used.

Example.—The weight of the circulating water used was seven pounds per minute, the rise in temperature of the circulating water was 30° F., and 0.333 cubic feet of gas was used per minute, then

$$\text{calorific value}=\frac{7\times 30}{0.333}=630.6 \text{ B. T. U. per cubic foot.}$$

This result is usually termed the *gross calorific value,* or the *higher heating value.* In the calorimeter the water produced in combustion is condensed and carried off as already explained through pipe R. In this operation it gives up its latent heat, and is measured in the cooling water, but in most industrial operations, such as the performance of a gas engine, the water formed during combustion passes off as steam, and carries with it the latent heat of that steam. The *lower heating value,* or what is sometimes called the *available calorific value* is equal to the gross value minus the latent heat of steam formed per cubic foot of gas at the temperature it leaves the calorimeter. As the temperature of the calorimeter is about 50° F., the total heat per pound is equal to $1147-(50-32)=1129$ B. T. U. per pound of water. Hence the lower heating value is obtained by deducting this quantity of heat from the higher heating value for every pound of water produced by the combustion of one pound of gas.

SUMMARY OF OBSERVED AND CALCULATED RESULTS FOR DETERMINING HEATING VALUE OF GAS BY MEANS OF A JUNKER CALORIMETER.

No. of Test.	Date of Test.	Rate of Gas, cu. ft., per hour.	Amount of Water, cu. ft.	Meter Readings, cu. ft.	Differences, cu. ft.	Temperature [Cent. Therm.]					Pressure of Gas, Inches of Water.	Barometer.	B. T. U.		Temperature of H_2O below and above atmospheric temperature.
						Room.	Water.		Gas.				Condition of Test.	Standard Condition.	
							Inlet.	Outlet.	Meter.	Chimney.					
1	2	3	4	5	6	7	8	9	10	11	12	13	14	15	
1	May 9, 1900	1.81	.3815		1.	23.51	11.87	34.00	22.20	15.74	.2	14.49	941.87	973.14	Initial, 11.64° C. below. Final, 10.49° C. above.
2	May 9, 1900	2.10	.3689		1.	22.63	11.90	34.61	21.79	15.74	.2	14.49	934.09	963.14	Initial, 10.73° C. below. Final, 11.98° C. above.
3	May 9, 1900	2.19	.5070		1.	20.55	11.89	28.74	20.69	15.55	.2	14.49	955.04	981.30	Initial, 8.69° C. below. Final, 8.16° C. above.
4	May 10, 1900	3.54	.7580		1.	18.07	12.295	23.716	18.00	15.00	.4	14.51	944.02	961.82	Initial, 5.77° C. below. Final, 5.65° C. above.
											Total			3879.40	
											Average			969.85	

In all tests .0833 lb. of water of combustion was caught.

In all tests the chimney damper was closed.

The gas not being at standard temperature and pressure, it was corrected to show the heat units per cubic foot of gas at 62° F. and 14.7 pounds pressure.

No correction made for the water of combustion.

There is a difference of opinion among scientists as to whether, in a calorimeter, the higher or lower heating value should be taken. In France the higher heating value is used, while in Germany the lower value is always taken, consequently in any reports of tests made, the condition employed should always be stated.

The accompanying table from an efficiency test of a 125-horsepower gas engine by C. H. Robertson shows the method of tabulating and computing results by means of a Junker calorimeter.

Testing Fuel Oil.

Navy Specifications for Fuel Oil.—(1) Fuel oil shall be a petroleum oil of best quality, free from grit, acid, fibrous, and other foreign matter likely to clog or injure the burners or valves.

(2) The unit of quantity to be a gallon of 231 cubic inches at a standard temperature of 60° F. For every variation of temperature of 10° F. from the standard, one-half of 1% shall be added or deducted from the measured or gaged quantity for correction.

(3) Sulphur in the oil must not exceed three-fourths of 1% by weight.

(4) Free water and sediment in the oil shown by gasoline test must not exceed 1% by volume. The gasoline test for moisture shall be made as follows:

(5) Samples taken at random should be thoroughly shaken and mixed; then 50 cc. of sample placed in a 100 cm. graduated glass cylinder. An equal quantity of not less than 68° gasoline should be mixed with the sample in the graduated glass, the combined mixture of oil and gasoline should then be thoroughly shaken and allowed to stand not less than six hours, when percentage of water and sediment will be taken by the inspector.

(6) The oil shall not flash at a temperature less than 200° F., the test to be made by the Abel or Pensky-Martin closed-cup method.

(7) The oil shall have a gravity Baumé not greater than 30° at 60° F., determined from an average sample.

(8) The oil shall flow freely and in a continuous stream through a $\frac{1}{2}$-inch circular hole under a 2-foot head at a temperature of 40° F. Oil that fails to flow freely and in the required quantities to

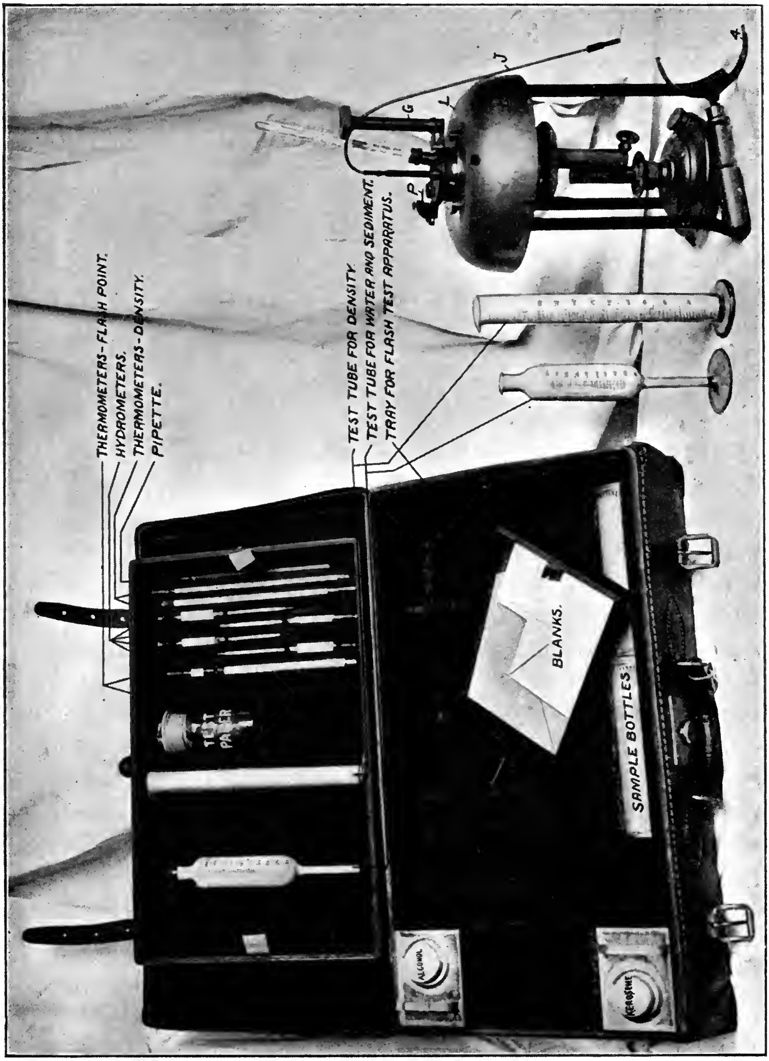
THERMOMETERS-FLASH POINT.
HYDROMETERS.
THERMOMETERS-DENSITY.
PIPETTE.
TEST TUBE FOR DENSITY.
TEST TUBE FOR WATER AND SEDIMENT.
TRAY FOR FLASH TEST APPARATUS.
P
G
L
J
A
TEST PAPER
BLANKS.
SAMPLE BOTTLES
ALCOHOL
KEROSENE

FIG. 133.

pump suctions, pass through pumps, piping, and burners at a temperature of 40° F. may be rejected.

(9) The oil shall have a calorific value not under 144,000 B. T. U. per gallon, to be taken from an average sample or samples of the product as delivered, or made before delivery. In determining this value, the bomb calorimeter shall be used to determine the B. T. U. per pound, from which the B. T. U. per gallon shall be calculated by using 8.331 pounds of distilled water per gallon at 60° F. and the specific gravity of the oil as determined by the Baumé test at same temperature. Should the conditions be such that oil of the required calorific value could not be obtained, oil of a less calorific value may be accepted at a reduction of 1% for each 1000 B. T. U. or fraction exceeding one-half thereof; but no oil having less than 135,000 B. T. U. per gallon will be accepted.

Each vessel that burns oil and all oil supply stations are provided with a portable test outfit as illustrated in Fig. 133. This has instruments for determining the flash point, percentage of water and sediment, and specific gravity. Samples are sent to a laboratory for the determination of the percentage of sulphur and the heating value.

The following instructions cover the use of the standard test outfit:

Instructions for Testing Fuel Oil for U. S. Navy.

The Pensky-Martens Apparatus for Flash Point: Description. Referring to Fig. 134.—*E* is the oil container, which is placed in a metal heating vessel *H*, provided with a mantle *L* in order to protect *H* from loss of heat by radiation. The oil cup *E* is closed by a tightly fitting lid (shown in plan 2). Through the center of the lid passes a shaft carrying the stirring arrangement, which is worked through a flexible connection by means of the handle *J*. In another opening of the cover is fixed a thermometer. The lid is perforated with several orifices, which are left open or covered, as the case may be, by a sliding cover. This can be rotated by turning the vertical spindle with milled head *G*. By turning *G*, an opening of the slide can be made to coincide with an orifice in the cover, and simultaneously a jet of flame *P*, from a very small spirit lamp, is tilted on the surface of the oil. This contrivance is shown on a larger scale in plan 2.

Operation.—All water which is contained in the oil must be removed before testing for flash point by filtering it through one of the small felt filters and funnels contained in the outfit. When the sample is prepared for test, the oil cup is filled up to the mark, the cover is fixed and the oil heated rapidly until its temperature reaches a point about 50° F. below the expected flash point. The wire gage screen, shown in Fig. 134, is then placed in position and the rate of rise in temperature is thus reduced to about 5° a minute. Handle J is turned slowly and continuously for stirring. From

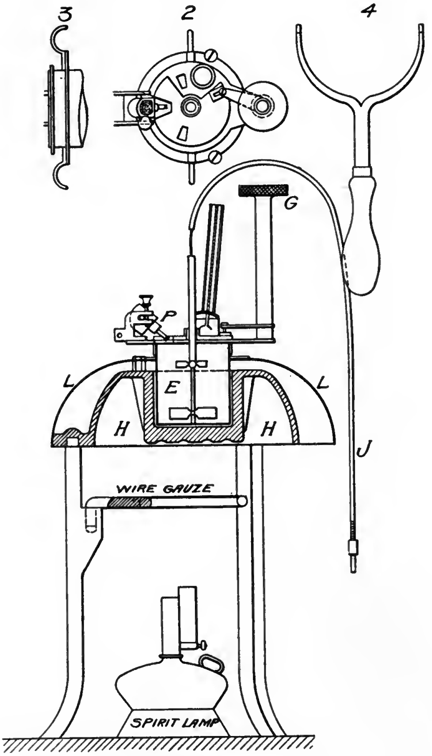

FIG. 134.

time to time the milled head *G* is turned, opening the shutter at top of the cup and tilting into it the flame *P*. This is done at intervals of 5° F. rise in temperature until near the probable flash point when the intervals are made 2° F. When the flash point is reached there will be a slight explosion when the flame is tilted down.

A sample can only be used for one test, since the more volatile products are driven off and subsequent tests would show a higher flash point.

The Fire Test.—This is the temperature at which the oil will give off vapors which when ignited will burn continuously. It is made by continuing to heat the oil after the flash point is established. In a closed testing apparatus the cover is removed for this test, the thermometer remaining in place. The flame is extinguished by putting on the cover.

Test for Determining Water and Sediment.—The outfit contains a graduated glass cylinder, as shown, having a small stem at bottom of 3 cc. capacity. Fifty cc. of the oil under test is placed in the cylinder and an equal quantity of gasoline or kerosene added. The whole is then shaken thoroughly and allowed to stand for at least two hours. All the oil and sediment will then be found to have settled in the narrow stem where it can be measured. If bubbles are found to be adhering to the glass they are removed with a thin wire agitator.

Each cc. of water and sediment found in the stem will represent 2 per cent in the sample tested.

Specific Gravity.—A sample of the oil is placed in the graduated glass jar, shown in Fig. 133, and a hydrometer slowly sunk into it. Care must be taken not to plunge the hydrometer deeper than it will float as this will make an accurate reading impossible. After reading the hydrometer it is removed and the temperature taken. By means of a correction table the specific gravity is reduced to 60° F., which is the standard for comparison.

Commercially the specific gravity of an oil in the United States is usually given according to the Baumé scale, an arbitrary standard whose value at various points is as follows. The weight per gallon is given at 60° F.:

10° Baumé = s. g. 1.000 = 8.331 pounds per gal.
15° “ = “ .967 = 8.056 “ “ “
20° “ = “ .936 = 7.798 “ “ “
25° “ = “ .907 = 7.556 “ “ “
30° “ = “ .880 = 7.331 “ “ “
35° “ = “ .854 = 7.115 “ “ “
40° “ = “ .830 = 6.915 “ “ “
45° “ = “ .807 = 6.723 “ “ “
50° “ = “ .785 = 6.540 “ “ “
55° “ = “ .765 = 6.373 “ “ “
60° “ = “ .745 = 6.206 “ “ “

Other Oils for Burning.—In addition to *fuel oil,* there is carried on board our naval vessels kerosene or *mineral oil* for use in lamps and as fuel in some of the internal combustion engines for motor boats, and *gasoline* which is the fuel most commonly employed in motor-boat engines. Lard oil, after it had been supplanted as a lubricant by compounded oils, was for several years carried for use in oil lamps. This has now been wholly dispensed with. Hand lamps in the engineer department are fitted to burn *vaclite,* a very heavy paraffine oil which is solid at ordinary temperatures. This material is usually purchased under its proprietary name. Other lamps are now fitted to burn kerosene.

Specifications for Mineral Oil (Kerosene).—(1) Samples of each lot, taken at random, will be tested photometrically after burning one hour in lamps fitted with No. 1 hinge burners, Marcy's patent, the standard employed being a standard Hoefner lamp. After burning five hours longer, the lamps will be again tested to determine any change in the intensity of the light. The flame must be of at least 6 candlepower and must show no material change in intensity during the five-hour interval.

(2) The samples must show a flash test of not less than 115° F. and a fire test of not less than 140° F. The flash and fire tests are to be conducted in a closed tester of the “Tagliabue” type.

(3) The oil will be tested for the presence of a free acid. Litmus paper immersed in the oil for five hours must remain unchanged.

(4) The specific gravity must not be greater than 0.793 at a temperature of 60° F.; to be purchased and inspected by weight.

(5) The oil must burn steadily and clearly, in a suitable lamp,

without smoking and with a minimum incrustation of the wick, for a period of at least seventy-two hours.

The Tagliabue apparatus for taking the flash and fire test under these specifications is similar to the New York State Board of Health Tester shown in Fig. 121, except that the cup has a metal cover with a hole to which a match is applied in making a test. A slide over this opening is kept closed except when applying the match.

Specifications for Gasoline for Use in U. S. Navy Motor Launches.—(1) To be a high grade, refined, gasoline, free from all impurities.

(2) *Inspection.*—Before acceptance the gasoline will be inspected. Samples of each lot will be taken at random; these samples will be well mixed in a clean, closed vessel, and a sample for test taken from this mixture.

(3) *Test.*—100 cc. will be taken as a test sample. This amount will be distilled in an Engler apparatus at a rate of not less than 10 cc. per minute.

(a) Boiling point must not be above 135° F.

(b) Not less than 10% shall distill over below 150° F.

(c) At least 50% of the sample must distill over below 200° F.

(d) One hundred per cent must distill over below 310° F.

(e) Not less than 96% of the liquid will be recovered from the distillation.

(4) Five cubic centimeters of the sample when poured over a sheet of white paper shall evaporate completely without leaving any stain.

(5) *Apparatus.*—The apparatus used for distillation and method of conducting the test shall be as follows: The apparatus shall consist of a 4-ounce Engler flask with outlet high on neck. The top of the thermometer bulb shall be opposite the bottom of the outlet tube. The condenser shall be a standard 20-inch Liebig type of condenser. The boiling point will be the temperature shown by the thermometer when the first drop of the condensed liquid falls from the end of the condenser into the receiving flask. The distillation shall be pushed to completion, at which time the bottom of the flask will be dry. The end point at this time will be indicated by a small flask or puff of smoke.

CHAPTER XI.

FLUE GAS ANALYSIS.

When coal is burned in the furnace of a boiler, the products of combustion are, for the most part, carbon dioxide (CO_2), carbon monoxide (CO), free oxygen, and nitrogen. A small percentage of steam (H_2O) is also present, resulting from the combustion of such portion of hydrogen as is in the coal. If it were possible to supply air in such quantity that the carbon in the coal would be completely burned to CO_2, and no more, and, furthermore, if it were possible to completely utilize all this air, combustion of maximum efficiency would be obtained. The CO_2 in the resulting products of combustion would then be about 21% and there would be no free oxygen or carbon monoxide present. In practice, in order to obtain the best possible results, a much larger quantity of air must be supplied, and as this quantity is increased the percentage of CO_2 given off is reduced. The efficiency of combustion is correspondingly reduced on account of the great quantity of heat lost with the additional volume of gases through the chimney. If, on the other hand, an insufficient quantity of air should be supplied, the percentage of CO will be increased and the percentage of CO_2 correspondingly reduced, showing a loss of efficiency from incomplete combustion.

The percentage of CO_2 present in the flue gases is thus seen to measure approximately the efficiency of combustion. Where 21% CO_2 represents perfect efficiency, 15% CO_2 represents a loss of 12% in efficiency of combustion. Fifteen per cent is about the maximum proportion of CO_2 that it is possible to obtain, the usual figure running down to 7% or 8%, representing a loss of 20% to 21% in efficiency. It becomes evident then that an apparatus for measuring the percentage of CO_2 in the products of combustion, affords a valuable means of checking losses from this cause.

The Orsatt-Muencke Apparatus.—This is shown in Fig. 135 in which *B* is a measuring tube, surrounded by a water jacket and connected to a levelling bottle *K*. The upper end of *B* is connected by a pipe to a nozzle *F* from which a hose connection leads to the sampling tube for obtaining the gas that is to be tested. Three U-shaped reagent bottles *A, A′*, and *A″* are each connected at one end by a short rubber tube with stop cock to the pipe connecting *B* with *F*. The other end is open to the atmosphere.

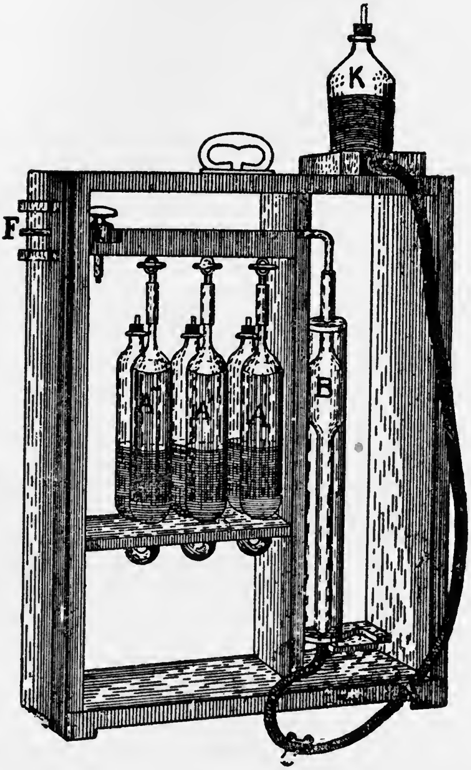

FIG. 135.

The reagent bottles are about half filled with reagents as follows:

(1) Bottle *A* with potassic hydrate to absorb CO_2. This is a solution in distilled water of from 3 to 5% of white caustic potash, which comes in sticks.

(2) Bottle *A′* with potassic pyrogallate to absorb the free oxygen. This reagent is prepared by mixing a strong solution of

potassic hydrate with 3% solution of pyrogallic acid. It will take about five minutes to absorb the oxygen.

(3) Bottle *A″* with cuprous chloride solution in concentrated hydrochloric acid to absorb the CO. This solution keeps best in a bottle containing a few pieces of clean copper wire. The absorption of CO takes longer than that of O.

Operation.—The cocks on the reagent bottles having been closed and the cock on *F* opened, the bottle *K* is partially filled with water, the water being allowed to run in and fill the measuring tube *B*. By lowering *K*, gas is drawn in through *F* filling *B*. Raising and lowering *K* several times the apparatus is cleared of air. Finally 100 cc. of gas is drawn into *B* and the cock on *F* closed. Then open the cock on *A* and allow the reagent in it to absorb the CO_2 by raising and lowering *K* alternately several times. The last time the reagent must be allowed to fill the leg next to the measuring tube completely. In order to be sure that the absorption of CO_2 is complete, the test should be repeated until the last readings of the measuring tube agree within 0.1%. The difference between the last reading and the 100 cc. originally drawn into *B* gives the volume of CO_2 absorbed which represents the percentage of CO_2 in the gas.

Similarly using reagent *A′* the O is absorbed, after which using *A″* the CO is eliminated. The volume in each case represents the percentage present in the original 100 cc. For these gases the last readings of the measuring tube must agree exactly.

The remainder, after the CO_2, O and CO are absorbed, is classed as nitrogen. When transferring the gas during these operations care must be taken not to allow any of the reagents to get into the measuring tube, as the water in the bottle must then be changed. A small quantity of water running into the reagent bottles during a transfer will do no harm.

A complete analysis will require about twenty minutes. Care must be taken to have the water in levelling bottle and reagents at the approximate temperature of the room, so that while the analysis is in progress there will be no change in the temperature of the gas and the volumes absorbed will correctly represent the percentages of each constituent by volume.

Calculations from Results of Analysis.—The weight of dry gases per pound of fuel as fired, is calculated from the analyses of the gases and the fuel and from that the number of pounds of dry air passing through the furnace per pound of fuel is found. An approximate heat balance can then be compiled, showing the losses in the heating value of the fuel due to the several causes. The heat units utilized are obtained from the results of the evaporative test of the boiler. In order to make such results comparative, the computations are based on the pound of combustible.

Example.—The gas analysis shows CO_2, 12.7; O, 5.7; CO, 0.5, and N, 81.1 by difference. The fuel analysis shows C, 83.5; H, 4.8; O, 3.2; N, 1.2; S, 0.5; moisture, 1.5; and ash 5.3. The calorific value of one pound of dry coal was found to be 14,580 B. T. U. by coal calorimeter.

The analysis of the coal, referred to *combustible, i. e.*, coal less the ash, would then be, in per cent, 88.2 C ($83.5 \times 100 \div 94.7$), 5.1 H, 3.4 O, 1.2 N, 0.5 S, and 1.6 moisture. The calorific value of one pound of dry combustible was found to be 15,640 B. T. U.

By Avogadro's hypothesis, the weight of a gaseous compound is equal to its molecular weight, referred to hydrogen as unity. The chemical equivalent by volume of CO and CO_2 is 2, and of O and N is 1, referred to hydrogen as unity, or, the molecular weights of H, O and N are twice that of their atomic weights. The weight of dry gases will, therefore, be the percentage of each gas found in the analysis multiplied by its molecular weight, or

$$\text{Pounds of dry gas} = \%CO_2 \times 44 + \%O_2 \times 32 + \%CO \times 28 + \%N_2 \times 28.$$

The pounds of dry gas, per pound of carbon, will then be this amount divided by the product of the atomic weight of carbon and the sum of the percentages of the carbon bearing gases. This is deduced as follows:

Weight of gases containing carbon $= CO_2 \times 44 + CO \times 28$.

Since $\frac{3}{11}$ of the CO_2 and $\frac{3}{7}$ of the CO is carbon, therefore,

$$\frac{3 \times CO_2 \times 44}{11} + \frac{3 \times CO \times 28}{7} = 12(CO_2 + CO).$$

Letting the symbols represent the percentages, by volume,
Pounds of dry gas per pound of carbon burned

$$= \frac{44CO_2 + 32O + 28CO + 28N}{12(CO_2 + CO)} = \frac{11CO_2 + 8O + 7(CO + N)}{3(CO_2 + CO)}.$$

Substituting the percentage values from the gas analysis given above, we get,

Dry gas per pound of carbon

$$=\frac{11\times 12.7+8\times 5.7+7(81.1+.5)}{3(12.7+.5)}=19.1 \text{ pounds.}$$

The number of pounds of dry gas per pound of combustible = pounds of gas per pound of carbon multiplied by the percentage of carbon (in decimals) in the combustible.

Or, in this case,

Dry gas per pound of combustible = 19.1 × .882 = 16.85 pounds.

The number of pounds of dry gas per pound of coal as fired = pounds of gas per pound of carbon multiplied by percentage of carbon (in decimals) in the coal.

The gas analysis accounts for the carbon only, and we must, therefore, add the H_2O in the gases, formed by evaporating the moisture and by burning the H in the coal. The latter we find on the same principle as above, and the former, from the coal analysis. Hence,

$$H_2O \text{ from hydrogen in coal}=\frac{4.8\times 9}{83.5}\quad=.52 \text{ pound.}$$

$$H_2O \text{ from moisture in coal}=.053\times .835=\underline{.04} \text{ pound.}$$

$$.56 \text{ pound.}$$

Or, the total weight of gases per pound of carbon = 19.1 + .56 = 19.66 pounds; per pound of combustible = 16.85 + .56 = 17.41 pounds; and per pound of coal as fired = 19.66 × .835 = 16.42 pounds.

The quantity of *air* which passed through the furnace for each pound of combustible is, therefore, 17.4 − 1 = 16.4 pounds. The air per pound of coal is only approximately one pound less than the gas per pound of coal.

Loss by Heat of Gases.—Suppose that the temperature of the gases in the uptake or smoke pipe was 590°, and that of the external air, 75° F. For all practical purposes, and in view of the approximate results which can be obtained by the present state of the art of gas analysis, the average specific heat of the dry gases may be taken as .24, and of the dry gases including the H_2O, as .246.

The rise in temperature is 515° F. As there were 17.41 pounds of gases for each pound of combustible, the sensible heat loss was,

$17.41 \times .246 \times 515 = 2204$ heat units per pound of combustible (1).

Loss Due to Latent Heat in H_2O.—The loss of sensible heat in the steam gas has been accounted for in the above calculation, but, in addition, there is the loss of heat rendered latent by changing the H_2O, formed from the H and H_2O in the coal, from water into steam. The latent heat of one pound of steam under atmospheric pressure is 965.8. It was found above that .56 pound of H_2O gas was evolved from the coal. The loss is, therefore,

$.56 \times 965.8 = 541$ heat units per pound of combustible (2).

Loss Due to Incomplete Combustion.—As we have found before, the weight of the carbon in the gases is $12(CO_2+CO)$. The perfect or complete combustion of this total carbon would have given $12(CO_2+CO) \times 14{,}600$ heat units $= a$. But the combustion of the carbon, as shown by the gas analysis, was only partially complete, and the heat generated was, therefore, only $12CO_2 \times 14{,}600 + 12CO \times 4400$ units $= b$. The difference between the two will give the loss in heat units due to the incomplete combustion, or, $\text{Loss} = a - b = 12CO \times 10{,}200$ heat units, or in per cent of a,

$$= \frac{12CO \times 10{,}200 \times 100}{12(CO_2+CO)} = \frac{CO \times 10{,}200 \times 100}{CO_2+CO} \text{ per pound of carbon.}$$

And per pound of combustible,

$$\text{Loss} = \frac{CO \times 10{,}200}{CO_2+CO} \times \frac{\%C \text{ in combustible}}{100}.$$

Substituting values from the above gas and chemical analyses, we get loss due to incomplete combustion, per pound of combustible

$$= \frac{.5 \times 10{,}200}{12.7+.5} \times \frac{88.2}{100} = 341 \text{ heat units (3).}$$

Suppose that the results of the evaporative test of the boiler gave 11.6 pounds as the equivalent evaporation from and at 212° F. per pound of combustible. Then,

$11.6 \times 965.8 = 11{,}203$ heat units absorbed by boiler (4).

From this and the losses computed above, we can make up a heat balance which will show the approximate distribution of the heating value of one pound of the combustible.

Calorific value of the combustible.........		15,640 heat units.
Absorbed by the boiler............	11,203	
Loss due to sensible heat in waste gases	2,206	
Loss due to latent heat in steam gas	541	
Loss due to incomplete combustion..	341	
Other losses, due to radiation, etc., by difference	1,349	
	15,640	

These values are frequently expressed in per cent of the calorific value of the combustible.

Apparatus for Determining CO_2 Alone.—A complete analysis of the flue gas affords most valuable information and is made a part of all complete boiler tests. For the daily routine in a boiler plant complete analyses are unnecessary and such work may be restricted to the determination of the percentage of CO_2 alone. This in itself affords a complete index to the character of the firing and discloses any waste due to an excessive or insufficient supply of air.

The Hays CO_2 Apparatus.—This is a modified and simplified form of the apparatus described on page 267. It is used for the determination of CO_2 alone, and is supplied to many of the vessels of the navy. It is shown in Fig. 136 and the method of operation is described by the manufacturer as follows:

Referring to Fig. 136.

Sample of gas is first measured in the burette *A*. It is then passed into the pipette *B* where it comes in contact with an absorbent solution. It is next returned to the burette and remeasured. The shrinkage represents the percentage of the gas absorbed.

The burette *A* is surrounded by a water jacket *A*1 and suspended on piano-wire springs. A leveling bottle, *C*, is connected with bottom of burette and is filled with water, brine, or solution of glycerine and water as preferred. Absorbent liquid is introduced into *B* through the funnel *E*. Pipette holds sufficient potash for 500 CO_2 determinations.

To operate the instrument hang upon any convenient nail at *T*. Remove stopper from leveling bottle and also stopper *S*. Open pinch cock *K* and raise leveling bottle until liquid entirely fills the burette. Return leveling bottle to its compartment; connect hose *N* with a piece of gas pipe and insert same into breeching or other point from which it is desired to draw the gas to be analyzed. Open pinch cock *Q* and pump the aspirator bulb. Gas enters the burette and bubbles out through the leveling bottle. Next open pinch cock

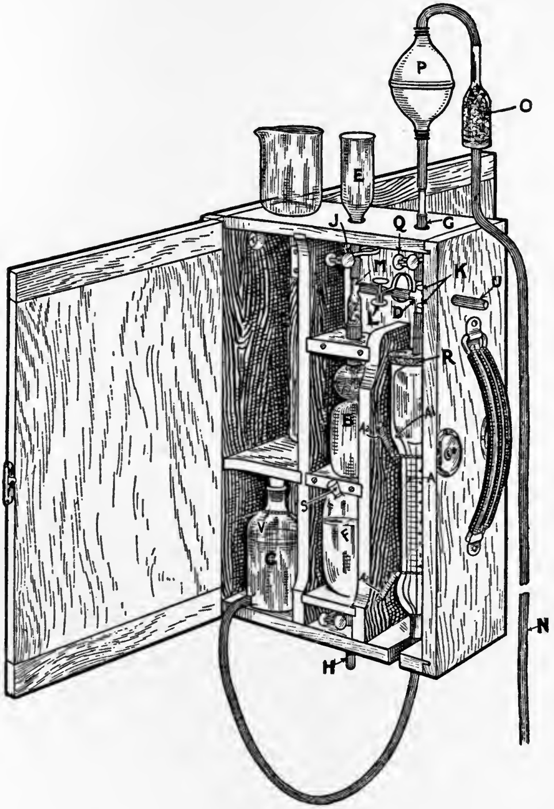

FIG. 136.

K and slowly raise leveling bottle until the liquid reaches the zero mark on the burette. Gas is passed back and forth between burette and pipette by opening pinch cock *L* and manipulating the leveling bottle.

Any absorbable gas can be determined with this instrument, by changing the solutions in the absorption pipette.

In determining O and CO in boiler furnace practice it is usually desired to know the averages of these gases from a large number of samples. The residue after each CO_2 absorption is discharged into the sampling bottle furnished with the instrument. One analysis for O and CO accordingly gives the averages for these gases on all the samples submitted to CO_2 absorption.

An analysis for CO_2 can be made every two minutes with this instrument and the average O and CO determined in 10 minutes on any desired number of gas samples.

The introduction of this apparatus in our naval vessels resulted in an immediate increase in the efficiency of firing with a marked decrease in coal consumption.

The Sarco Automatic CO_2 Recorder.—Referring to Fig. 137, the power required to drive this apparatus is derived from the main flue or chimney in the following manner: A water tank *A*, of annular section is filled with water, forming a seal for the gas tank *C*. This gas tank is balanced by a weight *D*, suspended by a cord, passing over the pulley *E*. *F* is a tube which passes under *A* and up through the inner compartment to the nozzle *G*, which is above the level of the water. This tube is connected to the main flue or chimney at *H*, through ordinary tubing, and the draught by exhausting the gas tank *C*, causes the same to sink downward into *A*.

This motion continues until *C* reaches its lowest point, when the stop J_1 strikes a lever, automatically opening the valve *I*. This admits air to *C*, which then rises until the stop J_2 strikes the lever, closing valve *I*, when the whole operation is repeated. This movement continues, furnishing the power necessary for the operation of the apparatus, so long as the communication with the flue or chimney, through *H*, is uninterrupted. A pinch valve *L* affords a means of regulating the speed of operation.

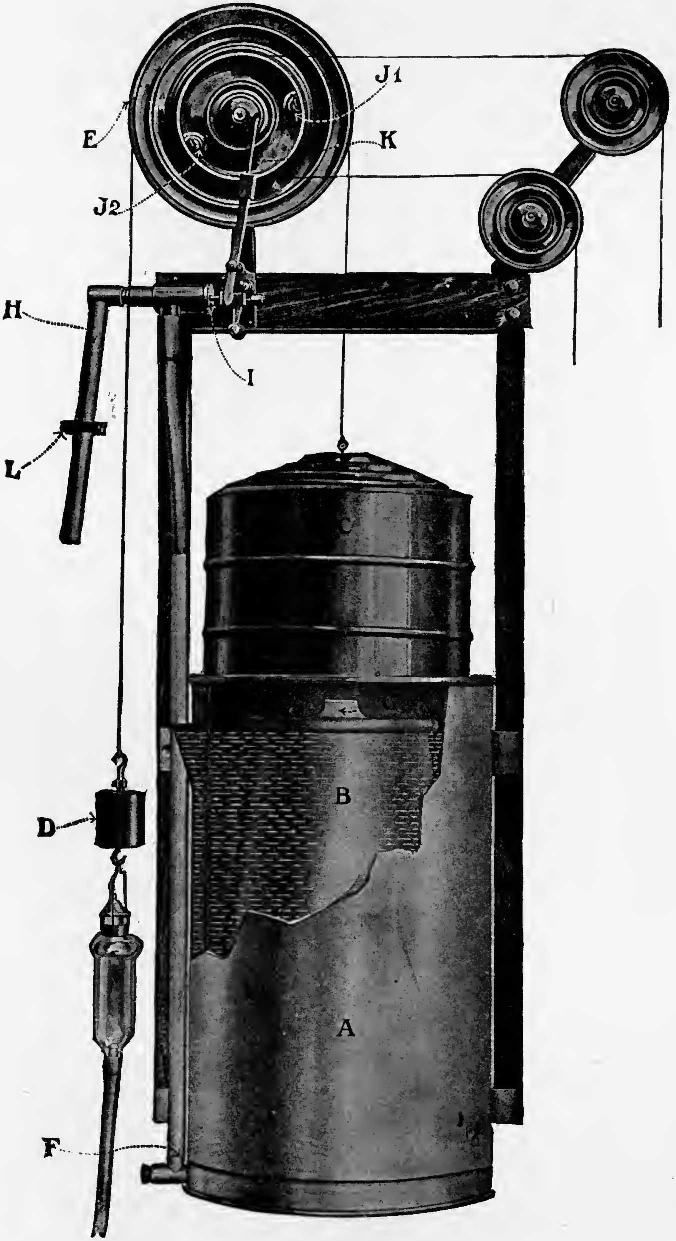

FIG. 137.

The Gas Pumps and Valves.—The power thus obtained is utilized to work two plungers (Fig. 138) attached to the side of the motor and connected to the large pulley by wires running over two small pulleys, as shown in Fig. 137. These plungers, or pumps, A_1 and A_2, are themselves small gas tanks, which dip into an oil seal contained in the tanks B_1 and B_2, the suction tubes to A_1 and A_2 going down through the center. To these tubes are attached two sets of valves C_1, C_2, and D_1, D_2, so constructed as to prevent the return of any gases that may enter through overcoming the small resistance offered by the glycerine with which they are partly filled. The two plungers move up and down alternately, one sucking gases into the valves while the other is pressing the same out through the outlet E and into the registering cabinet, a diagram of which is shown in Fig. 139. A continuous flow of gases is secured by this arrangement, air bubbles showing at the seal F, in case the flow should in any way be interrupted. To the lower outlet of the pump valves is attached an escape G, through which the surplus flue gases, not required for analysis, pass out into the atmosphere.

FIG. 138.

The Analyzing and Recording Apparatus.—Coming from the pumps, the flue gases enter the registering cabinet (Fig. 139) at H, pass down tube I, and into vessels J_1 and J_2. These vessels are in communication with a bottle K through the tube L. Bottle K contains a mixture of glycerine and water. It is attached to the weight D (Fig. 137), and is carried up and down regularly with it.

On the up stroke the liquid in K rises in tube L and seeks its level in vessels J_1 and J_2, into which the flue gas is being pumped.

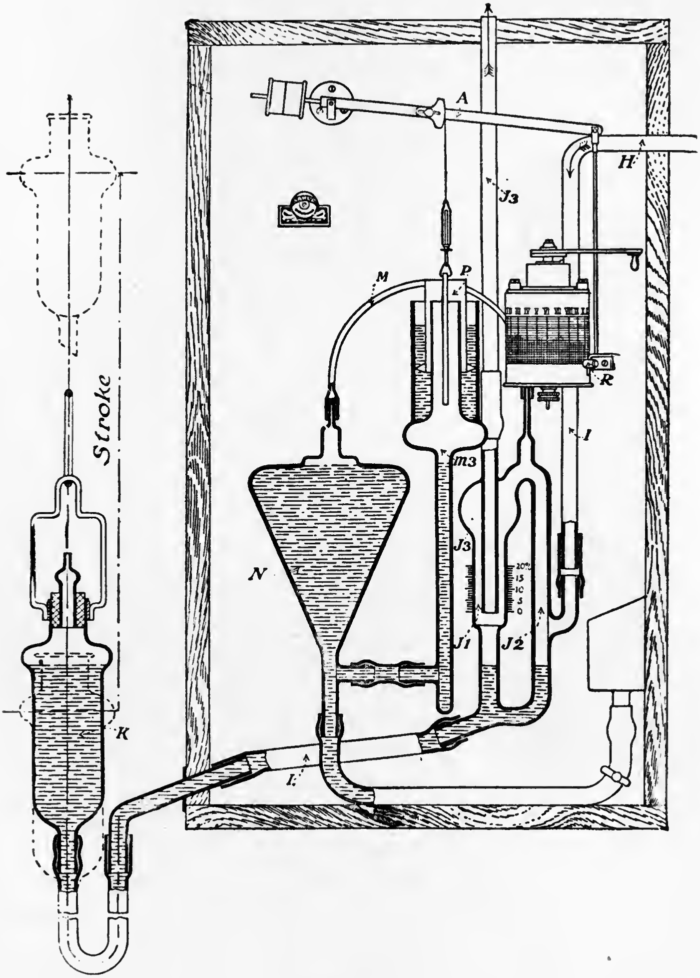

FIG. 139.

As soon as the liquid covers the end of tube *I*, where it enters J_1, the flow of gas into J_1, J_2, is stopped. Part of the contained gases then escape through the inner tube J_3 into the atmosphere and when this outlet is sealed by the liquid rising further, exactly 100 cubic centimeters of flue gases are tapped in J_1, J_2. This quantity is gradually forced through the small curved tube *M* and brought into contact with a solution of caustic potash, with which vessel *N* is filled to the mark m_3. The pressure of the gas on the surface of the potash displaces same in *N*, forcing it up into vessel *O*. The air which is thus displaced in *O* passes under cylinder *P*, which is suspended by a silk cord and accurately counterbalanced.

The slight pressure thus created causes lever *Q* to swing upwards, carrying with it pen *R*, which is attached to the end of the lever. This pen rests against a circular drum fitted with clockwork and makes a continuous record on a chart that is fitted on the drum. This chart is calibrated in terms of percentage of CO_2, reading from zero at the top to 20% at the bottom. Each chart, corresponding to one complete revolution of the drum, gives a record for 24 hours.

The actuating stops, J_1 and J_2, shown in Fig. 137, are so adjusted that the motion of the motor is reversed the moment that the pen has completed its upward stroke. The sealing liquid then recedes again, the potash falls back to its original level mark m_3, and the remaining gas mixture is drawn out of vessels *N*, J_1, and J_2, and passes into the atmosphere.

As soon as the level of the sealing liquid has fallen below the gas inlet from tube *I*, a constant supply of fresh gas is continually pumped through the instrument, until the returning seal again bottles off a fresh portion for analysis in the same manner as above described. This process can be repeated as rapidly as desired, the result of each analysis being recorded on the chart by a vertical line. The tops of the various lines form a continuous curve, showing the percentage of CO_2 in the flue gases at any time during the 24 hours.

A facsimile of a chart made by this apparatus is shown in Fig. 140.

Application of the Apparatus.—The recorder should be located in the fire-room in such place as will be readily accessible but where it will be free from injury while working the fires. The gases to be analyzed should be taken from the uptake on the boiler side of the damper and conveyed to the recorder through ordinary $\frac{3}{4}$-inch gas piping. By running a system of branch pipes, tapping the uptake of each boiler, and connecting through a main pipe to the recorder, separate readings may be taken for all of the boilers at will. A cock or valve should in such case be fitted on each branch.

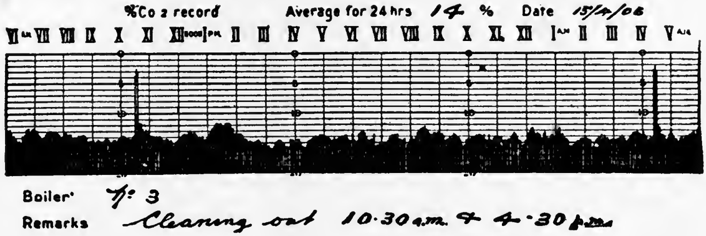

%Co 2 record Average for 24 hrs 14 % Date 15/4/06

Boiler No 3

Remarks Cleaning out 10·30 a.m. & 4·30 p.m.

FIG. 140.

Filter.—In order that the gases may be free from impurities when passing through the apparatus, a filter of special construction is provided with each outfit, and should be inserted in the supply pipe as close to the boiler as practicable.

The filter is filled with fine wood shavings, intercepted by a layer of sawdust. The lid is provided with a glycerine seal. At the bottom is attached a water separator in which any water that may condense in the pipes will collect and may be drained off from time to time. The separator is filled with glycerine to a given mark in order to exclude the air.

Draught for Motive Power.—This is obtained from the base of smoke pipe, above damper, and is brought through a 1-inch pipe to the recorder, where the connection is made by rubber tubing. About $\frac{1}{2}$-inch draught pressure is all that is required for the operation of the apparatus.

The Uehling CO_2 Recorder.—Referring back to Fig. 26 if a constant vacuum of say 48 inches of water be maintained in chamber C' and the two apertures A and B are of the same size and are maintained at the same temperature, the manometer *p* will show about one half the vacuum maintained in *C′* due to the fact that the apertures oppose equal resistance to the passage of the gas.

This relation will be maintained so long as the same volume of gas flows through *B* as enters at *A*. If, however, a constituent of the gas (CO_2) be continuously taken away or absorbed in passing through chamber *C* the vacuum therein will be correspondingly increased. This increase of vacuum in *C*, shown by the manometer *p*, therefore correctly indicates the volume of the gas to be determined.

In the complete instrument the suction is produced by a steam aspirator and is automatically regulated to 48 inches of water. Both apertures are kept at a constant temperature by the exhaust steam from the aspirator and are protected by efficient filters. The CO_2 is absorbed between the two apertures of a dilute solution of caustic soda and the space between these apertures is connected with a manometer which is provided with a scale calibrated in per cent of CO_2. This manometer may be placed on or near the boiler front showing continuously the percentage of CO_2 for the information of the fire room force, or there may be a recording gage similar to those shown in Chapter III, adjusted to give a continuous record.

TIME FIRING DEVICES.

The object of these devices is to automatically give audible and visual signals in each fire room at regular time intervals. The audible signal calls attention to the visual signal, which indicates the furnace that is to be fired. The time intervals can be varied at will from 20 seconds to 9 minutes, thus ensuring regular firing and working of the fires at all speeds from the lowest to the highest.

Each ship is provided with a transmitter, located in the working engine room, and an indicator in each fire room. Fig. 141 shows, in elementary form, a typical arrangement for a battleship. The transmitter contains the timer and suitable mechanism for setting it for the desired time intervals, the mechanism for closing the indicator circuits at these time intervals, and cut out switches and fuses, so that any indicator may be readily cut out of circuit when desired. The indicators are constructed to suit the number of furnaces in the fire rooms in which they are installed. The devices are connected to the ship's lighting circuits, operating at 125 volts on later vessels and 80 volts on those of earlier date.

These principles govern the design of all devices of this kind that have been introduced in the service.

A comparison of the different devices is afforded by a brief description of the mechanism for controlling the time interval in transmitters, the method of operation of indicators, and an elementary wiring diagram of each type.

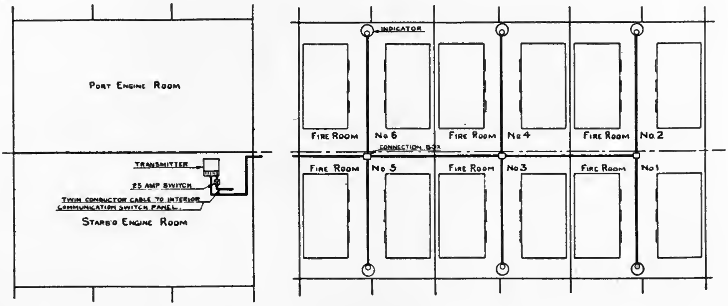

FIG. 141.

The Corey Time Firing Device. Old Type.—This has been supplied to a number of our ships. A diagram is shown in Fig. 142, from which the operation will be understood. A small constant-speed motor is geared to the wheel *A* and this, through the small friction wheel *B,* operates wheel *C.* *A* and *C* are flat discs, while *B* is carried in a frame by the screw shaft *D,* and its position is adjusted by the thumb screw *E.* By changing the position of *B* we change the relative speed of *A* and *C.* An index is provided to indicate the firing interval, as regulated through *B* by the speed of revolution of *C.*

Two contactors, *F* and *G,* are seen, which are closed and opened alternately six times for each revolution of *C.* These make connections to the coils of a pair of electromagnets, shown near the bottom of the diagram. These in turn make and break the circuits for operating the starboard and port indicators respectively, in the fire rooms.

The receiver consists essentially of an electromagnet, the armature of which carries an escapement that operates a shaft, and this in turn carries a dial with the signal numbers on it. It will be

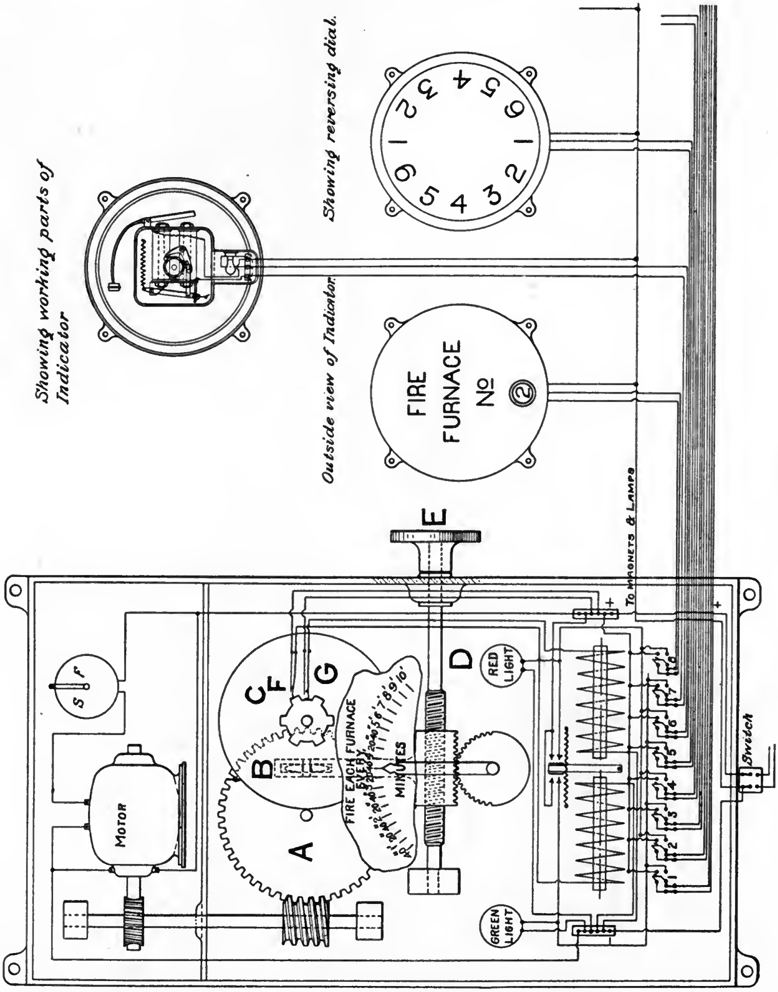

FIG. 142.

noted that there are twelve displays for a complete revolution of the shaft, the numbers from 1 to 6 being repeated. This gives a better arrangement of the mechanism.

Three wires only are necesary in the conduits leading to each fire room. One of these is to the electromagnet, one to the lamp, and the third is a common return.

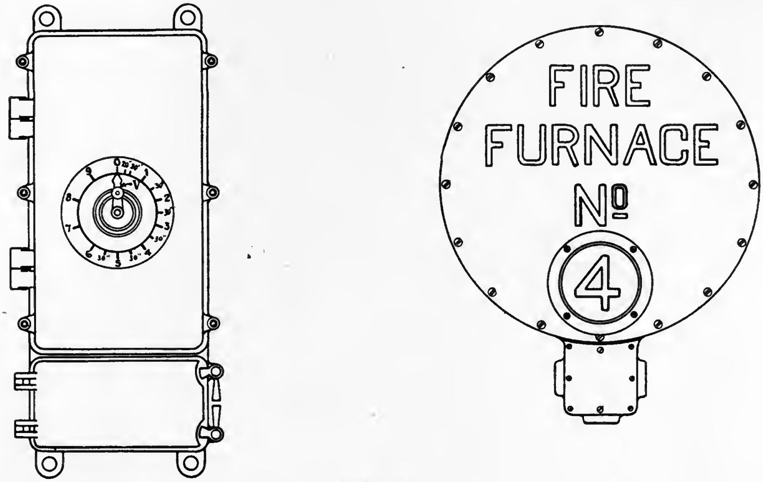

FIG. 143.

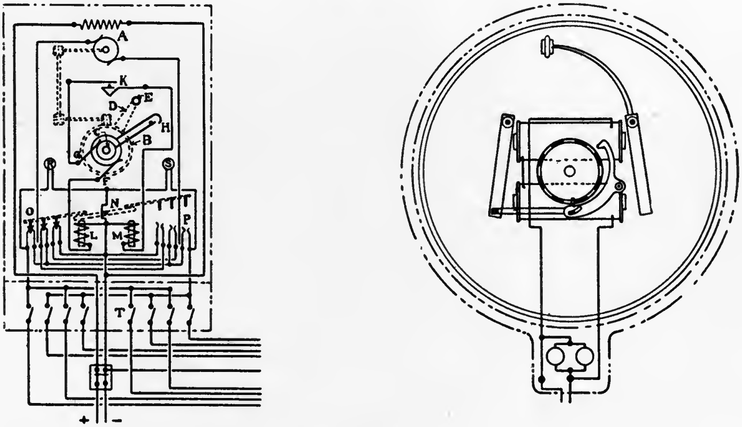

FIG. 144.

Corey Time Firing Device. New Type.—Figs. 143 and 144 show external views and the wiring diagram respectively of the transmitter and indicator. The transmitter contains a shunt-wound motor, *A,* running at a constant speed of 1600 revolutions per minute. Through suitable worm gears for reducing the speed, this motor drives a gear wheel *B,* at a speed of one-fifth of a revolution per minute. An arm *D,* carrying an insulated pin *E* at its end, is rigidly secured to this gear wheel. On the shaft *C* is an arm, carrying contact springs *H,* which can be set at any desired angle by means of a pointer and handle (*V,* Fig. 143), located on the front of the transmitter case, and secured to the shaft *C.* Current is supplied to these contact springs through collector rings and brushes *F* and *G.*

There are two electromagnetic relays *L* and *M,* which are alternately energized when the pin *E,* carried by the revolving arm *D,* makes contact between, first the movable contact springs *H,* and afterwards the fixed contact springs *K.* This causes the rocker armature *N* to alternately close the two sets of knife-blade switches *O* and *P,* reversing the direction of rotation of the motor, and therefore of the arm *D.* These sets of switches *O* and *P* also transmit indications alternately to the starboard and port indicators.

Since the speed of revolution of the arm *D,* carrying pin *E,* is constant, the desired time intervals are obtained by varying the angle between the fixed contact springs *K* and the movable springs *H.*

Two lamps, *R* and *S,* are provided in the transmitter, one showing through a green glass when signals are sent to starboard fire rooms and the other through a red glass when the port indicators are operated.

Fused cut-out switches *T* are installed in the bottom of the transmitter case.

The indicators with this device are similar to those used with the earlier type of Corey device, except that each indicator requires only two wires.

Kilroy Time Firing Device.—Figs. 145 and 146 show the external appearance and wiring diagram, respectively, of the transmitter and indicator of this device.

The transmitter contains three electromagnets, *A, B* and *C,* two of which, *B* and *C,* are so arranged that they will alternately attract a pivoted armature *D,* which operates an automatic switch *G,* thus closing the current alternately through the winding of the magnets. A condenser *c* is connected across the line to reduce the spark. The armature *D* is geared to a thin copper disc (not shown) which revolves in the field of the upper electromagnet *A* and serves as a brake or retarder for the armature *D*. The different time intervals are controlled by regulating the strength of the field of magnet *A*. This is done by means of the rheostat *R*, the regulation of which

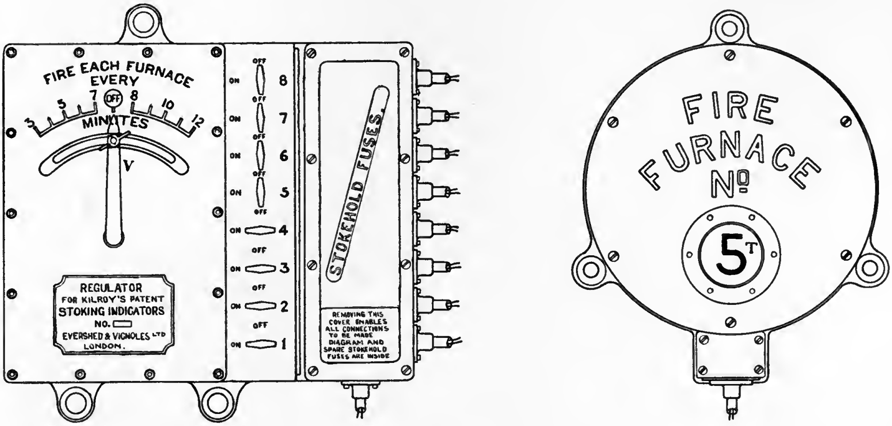

FIG. 145.

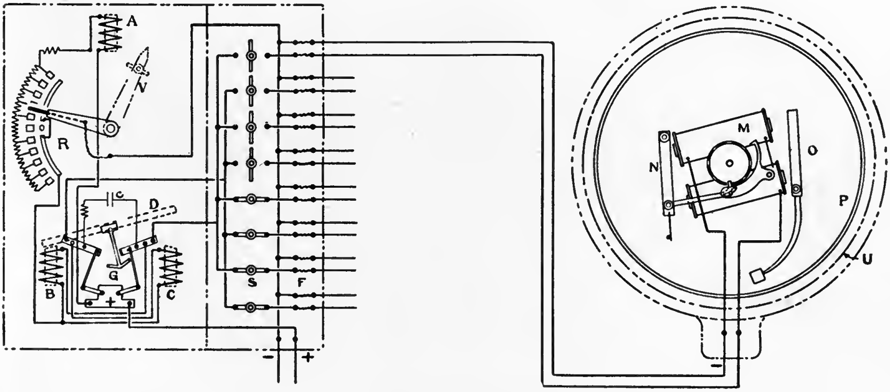

FIG. 146.

is effected by means of the pointer *V*, located on the front cover of the transmitter. There is a dial with suitable lettering for setting the pointer for the desired time interval.

The magnet *A* is wired in parallel with magnets *B* and *C*, so that the strength of the field of magnet *A*, in which the copper brake disc revolves, and the pull of magnets *B* and *C* on armature *D* may keep the same relation to each other. By this arrangement the accuracy of the time intervals will not be affected by changes in strength of the supply current.

On one side of the transmitter are located fuse blocks *F* and cut-out switches *S*, through which current is supplied to the several indicators. It will be noted that the automatic switch *G* is so arranged that it permits current to pass through only half the indicators at one time. Usually signals are sent alternately to the starboard and port fire rooms.

Each indicator contains an electromagnet *M*, with two armatures, *N* and *O*, one of which strikes a gong *P*, and the other revolves a disc *U*, by means of a ratchet and pawl mechanism *L*. The dial *U* has numerals spaced at regular intervals around its outer edge, which become visible when opposite the opening *T* in the front cover of the indicator.

Sub-Target Gun Company's Time Firing Device.—Figs. 147 and 148 show the external appearance and wiring diagram, respectively, of the transmitter and indicator for this device.

The timer, *A*, consists of an electromagnet of special construction, with an oscillating armature (not shown) which serves to alternately open and close the current through the magnet coils. A spring attached to this armature pulls it away from the magnet poles when the circuit is open. A small fan is geared to the armature and spring, the motion of which is retarded by the air resistance, causing it to act as a brake to regulate the time required for the armature to make one complete oscillation or beat. The device is adjusted so that this time is three seconds.

At each beat of the armature, the switch *B* is first closed, then opened, energizing a second magnet *C*. This transmits current to one of the magnets *D* or *E*, geared to a spindle *F*, so as to cause it to revolve alternately in opposite directions. A contactor block *G* is threaded on this spindle, so that it will travel back and forth between a pair of fixed contact springs *H* and a pair of adjustable contact springs *I*. When the spindle is being driven by one of the

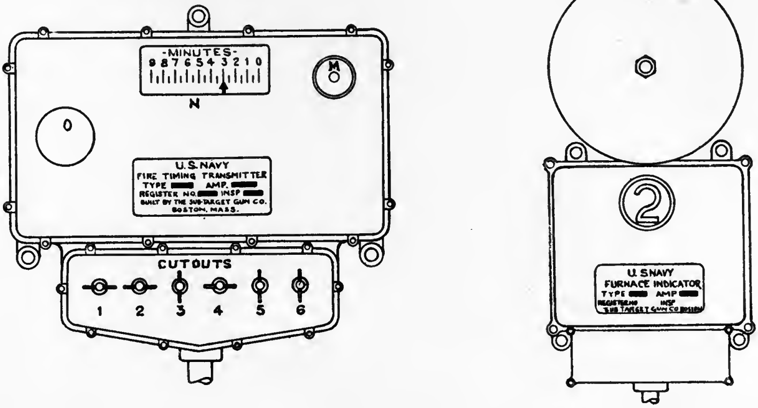

FIG. 147.

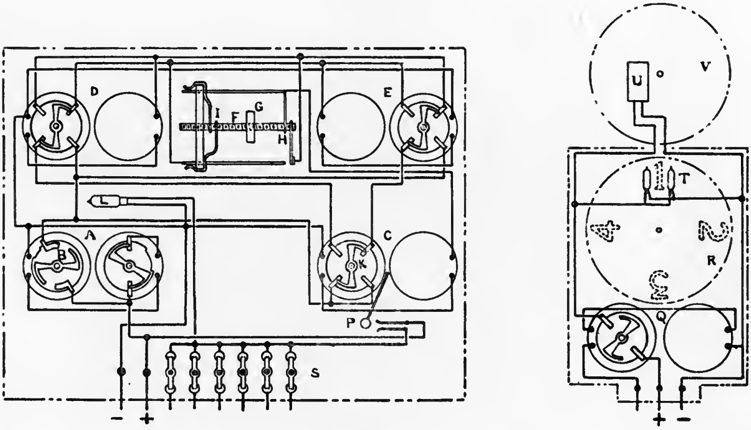

FIG. 148.

electromagnets, *D* for example, the contactor will move toward the fixed contact *H* a certain distance each time the magnet *D* is energized, *i. e.,* every three seconds. When contact is made at *H* the magnet *C* is energized, thus reversing the switch *K,* throwing magnet *D* out and magnet *E* in circuit. This causes the contactor *G* to move at regular intervals in the other direction until contact is made at *I,* when magnet *E* is cut out of circuit and *D* thrown in again.

Since the contactor *G* moves an equal distance every three seconds, it is noted that the desired time intervals may be obtained by regulating the distance between contacts *H* and *I.* This is done by means of a small hand wheel *M* (Fig. 147) on the front cover of the transmitter, which is geared to the movable block holding the contact springs *I.* A dial and pointer *N,* on the front of the transmitter, shows the time interval at which it is set. A lamp *L* shows through an opening *O* in the front of the transmitter each time signals are sent to the fire rooms.

The magnet *C,* in addition to directing current to magnets *D* and *E,* also operates switch *P,* closing the circuit through the indicators each time contact is made at *H* or *I.*

The indicator contains a magnet *Q,* the armature of which revolves a dial *R* through a ratchet and pawl mechanism, not shown. The dial carries the perforated numerals 1, 2, 3, etc., denoting the furnaces in the fire rooms. The magnet *Q* also lights the lamps *T,* located behind the dial *R* and illuminates the numerals; also closes the circuit through a magnet *U* and sounds a gong *V* each time a signal is received.

General Electric Company's Time Firing Device. New Type.—The principle parts of the transmitter in this device are shown diagrammatically in Fig. 149.

A shunt-wound motor, *A,* runs at a constant speed and drives, through suitable reducing gears, a cam shaft, *B,* at a speed of 2 revolutions per minute. This shaft carries a cam *C,* which rotates a ratchet wheel *E,* by means of a lever *D* and pawl *F.* Another pawl, *N,* holds the ratchet wheel when pawl *F* is being lifted.

The ratchet wheel *E* carries a pin *H* which, at a certain position of its revolution, strikes the arm of a retaining pawl *I* and disengages it, releasing a rock shaft *K* and throwing contact arm *L* against cam *M,* thus closing the circuit to the indicators. At the same time arm *P* strikes arm *Q* and disengages pawls *F* and *N.* Ratchet wheel *E* is then drawn back by spring *Q* until pin *H* brings up against an adjustable stop *R.*

Just before cam *C* again begins to raise the lever *D,* the contact arm *L* snaps off cam *M,* breaking the circuit to the indicators. Then, as the lever *D* is lifted, the arm *Q* raises rocker arm *P,* thus resetting the other end of same under the retaining pawl *I.* This holds the contact arm *L* clear of cam *M* until pin *H* again strikes pawl *I.*

It will thus be seen that since cam shaft *B* revolves at a constant speed of 2 revolutions per minute, the ratchet wheel *E* will be revolved through an equal angle every thirty seconds, and the desired time intervals are obtained by regulating the angular distance between retaining pawl *I* and adjustable stop *R.* This is done by means of a dial and pointer *T* located on the outside of the transmitter case.

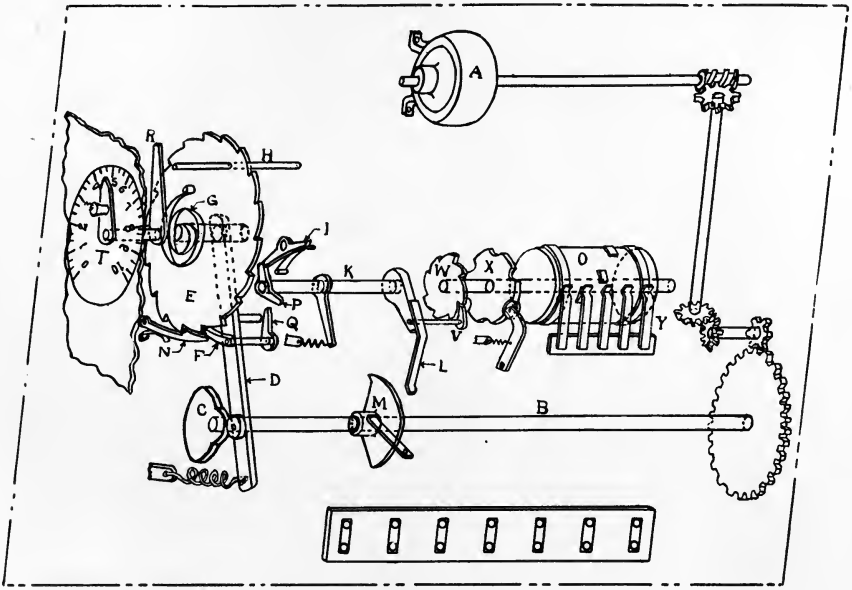

FIG. 149.

It will be noted that the movement of rock shaft *K* causes a pawl *V* to rotate a ratchet wheel *W,* which carries a number signal cylinder *O.* This cylinder supports a number of contact blocks which, by making contact with the several springs *Y*, cause to be indicated the number of the furnace to be fired. A slotted wheel *X* with roller and arm serves to hold the cylinder in position. It will be noted that the movement of the cylinder always occurs when the circuit is open, so that the circuit is made and broken only by the arm *L* on cam *M*.

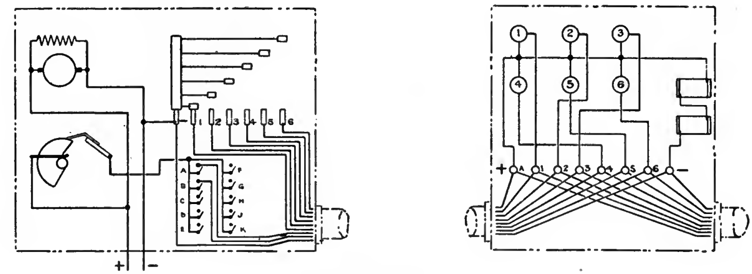

FIG. 150.

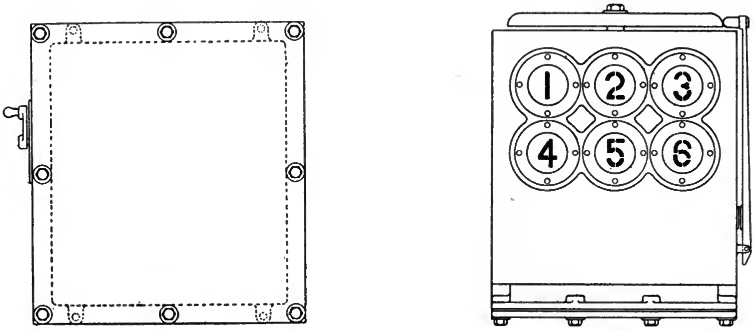

FIG. 151.

Switches and fuses are located in the base of the transmitter.

The Indicator.—This consists of a number of 5-candle-power lamps and an electromagnet in a water-tight case. A glass-covered opening in front of each lamp is covered by a piece of metal having a number cut in silhouette, so that each lamp, when lighted, will indicate the number of a furnace to be fired. The electromagnet operates a gong located on the outside of the case, and attracts attention to each change of signal.

This device has the advantage of eliminating all coils, with few make and break contacts in the transmitter, and also the elimination of moving parts in the indicator. The disadvantages are the large number of working mechanical parts in the transmitter, and if there should be a failure of any of the lamps of the indicator there would be a corresponding failure in the display of the number corresponding to such lamp.

An elementary wiring diagram of a transmitter and an indicator are shown in Fig. 150. Outside views of these parts are shown in Fig. 151.

The Lobitz Time Firing Device.—This device was designed by Machinist Henry Lobitz, U. S. N., and the initial installation was made and installed by the ship's force on board the U. S. S. *Minnesota*.

Referring to Fig. 152, there is a small leather-bound friction wheel, 2½ inches diameter, placed on a shaft driven from the main-engine revolution-indicator gear. The wheel is driven through worm gearing proportioned to give one revolution of the wheel for two hundred revolutions of the main engine.

The friction wheel makes contact with the face of and drives an 18-inch disc as shown. The friction wheel is loosely mounted on its shaft, with a sliding feather for driving it and with an adjusting screw for varying its distance from the center of the disc. The pressure between the face of disc and circumference of friction wheel can be varied by an adjusting nut at the center of the disc. This nut has a ball-bearing under it to lessen friction.

Gong Signals.—The circumference of the disc carries four lugs spaced 90° apart. These lugs carry one, two, three and four teeth, respectively. As the disc revolves, each tooth in turn engages the contact maker, shown at the right in the figure, and closes a circuit leading to an electric gong in each fire room. The gongs are thus made to strike one, two, three and four times at regular intervals, the length of the intervals depending upon, first, the speed of the main engines, and, second, on the distance of the friction wheel from the center of the disc.

The index plate at the right indicates the proper setting of the friction wheel for any firing interval that may be desired.

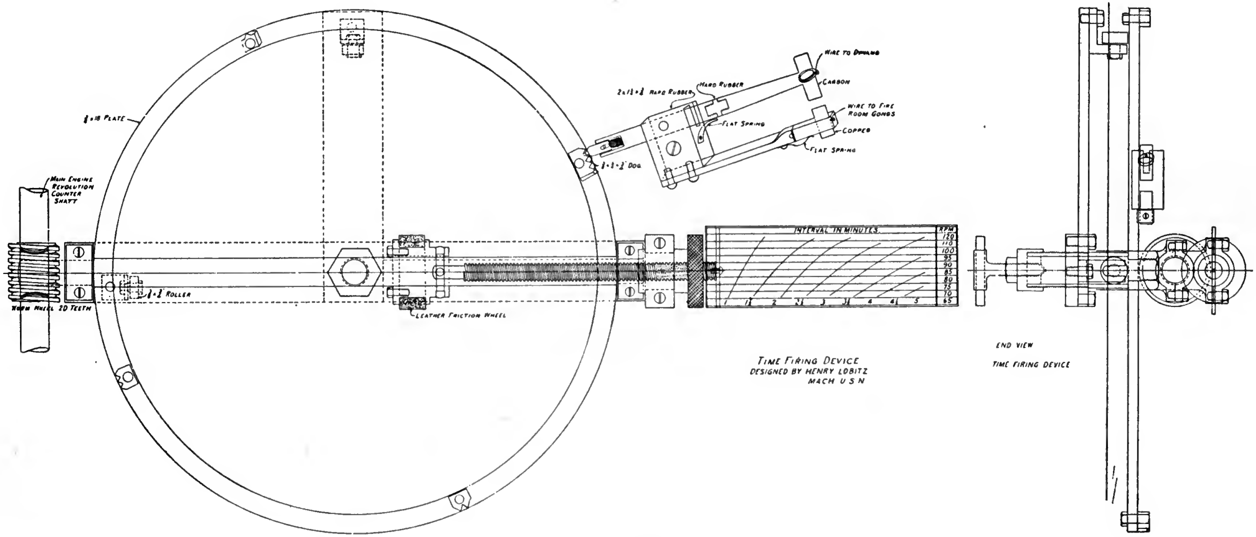
WIRE TO DYNAMO
CARBON
2 x 1½ x ⅛ HARD RUBBER
HARD RUBBER
FLAT SPRING
WIRE TO FIRE ROOM GONGS
COPPER
FLAT SPRING
1 x 1 x ¼" DOG
⅛ x 18 PLATE
MAIN ENGINE REVOLUTION COUNTER SHAFT
WORM WHEEL 20 TEETH
¼ x ¾" ROLLER
LEATHER FRICTION WHEEL
INTERVAL IN MINUTES
RPM
120
110
100
95
90
85
80
75
70
65
1
1½
2
2½
3
3½
4
4½
5
TIME FIRING DEVICE
DESIGNED BY HENRY LOBITZ
MACH U S N
END VIEW
TIME FIRING DEVICE

FIG. 152.

Visual Signals.—On the shaft of the rotating disc there is a 6-inch hard-rubber disc with, first, a copper ring, and, second, four segments of a copper ring at equal intervals around its circumference.

On the friction disc there is a carbon holder which rides over the copper ring and the segment. Each segment is wired to a lamp in a light box placed in each fire room, the light box having the figures 1, 2, 3, 4 on it. When the gong strikes one, the figure one is lighted up in the light box—2 gongs: No. 2, lights up; and so on.

QUESTIONS ON THE TEXT.

CHAPTER I.

1. What is experimental engineering? What tests are made in connection with marine engineering work and for what purposes? Why are numerous tests made of different samples from the same lot of material? Does this lead to more accurate results, and if so, why?

2. Explain the value of accuracy in engineering calculations and the necessity for discrimination in the effort to obtain accurate results.

3. What are *direct* and *indirect* measurements? Give examples. What determines the degree of accuracy for which a quantity is measured? Explain the limits of error in observations.

4. Explain the use of a series of observations in determining the most probable value: (1) Where the observations have been made with care, (2) where they are not all equally reliable.

5. Discuss *sources of error*, the different classes of errors and how to avoid them. Distinguish between *mistakes* and *errors of observation*.

6. Explain the term *significant figures* and how to determine the degree of accuracy of the various places of significant figures in an observed quantity when its average deviation is known.

7. Give the rules for significant figures and illustrate by examples.

8. What procedure should be followed in computing the results of a test? What details should be included in the report?

CHAPTER II.

9. What is a logarithmic scale, how constructed and what do the figures on it represent? Explain the use of the logarithmic scale: (1) in multiplication, (2) in division. If the pointer should fall off the scale what is done?

10. Explain the construction of Sexton's omnimetre. How determine the logarithm of a number by the use of this instrument?

11. Briefly describe the functions of the several circles of the omnimetre and explain in detail how you would proceed to find the value of a formula expressed in the form:

$$\frac{a \times \sin b \times C^2 \times \sec d \times e^3}{f \times \tan g \times \operatorname{vers} \sin h}$$

12. Explain the use of the omnimeter in solving problems of the form $x = \sqrt{a^2 + b^2}$ and $x = \sqrt{a^2 - b^2}$.

13. Explain the construction of Fuller's calculating instrument and of Sperry's Pocket Calculator. For what classes of work are each of these adapted?

14. Explain the use of the straight slide rule. How does it differ from the single logarithmic scale and what is the advantage gained thereby?

15. Explain the construction of Thacher's calculating instrument. What is the essential difference between this and the Fuller instrument and wherein lie the advantages of each?

16. Explain the construction and use of the duplex slide rule.

17. Make a line sketch of the Amsler polar planimeter. Letter and name the essential parts. What is the *zero circle?* How is its value obtained and how is it applied? What feature makes this instrument adaptable for use in computing indicator ends?

18. Demonstrate the accuracy of the Amsler polar planimeter in measuring areas outside the zero circle and show that the demonstration is general.

19. Make a plan view of Coffin's averaging instrument, showing an indicator card in position; explain how to adjust the card and the instrument prior to measuring the card and describe the method employed in measuring (1) the area of the card, (2) its mean ordinate.

20. Demonstrate the theory of the Coffin averaging instrument and show how the instrument is a special form of the Amsler planimeter.

CHAPTER III.

21. Sketch the Pratt and Whitney measuring machine. Letter and name its essential parts. Describe in detail the method of adjusting the machine to zero and measuring an object in the machine.

22. Show by line sketches the detail construction of a Bourdon gage and a diaphragm gage.

23. Distinguish, illustrating by sketches, between single and double tube Bourdon gages. Which is preferred and why?

24. How are the dials of pressure and vacuum gages graduated? What is a compound gage and how is it graduated?

25. Sketch and explain the essential features of a recording pressure gage. Show by an additional sketch the recording mechanism of an air pressure gage.

26. Show by sketch the working principle of the Uehling differential recorder. Letter the different parts and explain its operation.

27. Make a line sketch, showing the essential features of a standard steam and vacuum gage testing apparatus. Explain in detail how to conduct a test with this outfit.

28. How are gages tested on board ship? What is a manometer and for what purpose is it used? How are manometer readings expressed?

29. What is the practical high temperature limit of an ordinary mercurial thermometer and why? What are the different types of pyrometers?

30. Explain the principle on which the gas thermometer is constructed. Make line sketch, showing the construction of the Industrial Thermograph. Explain its action and state the material used in filling the bulbs for various ranges of temperature.

31. Make diagrammatic sketch and explain the underlying principle in Uehling's pneumatic pyrometer.

31. Make diagrammatic sketch of all the parts in Uehling's pneumatic pyrometer and explain its operation.

32. Make line sketch of Uehling's pneumatic pyrometer assembled complete. Also sectional view of the bulb. Explain how the instrument

is connected up for use and how it may be used for a whole battery of boilers.

33. How does a mercurial pyrometer differ from a mercurial thermometer and why? What are the advantages of and limitations on such an instrument? Explain the construction of an expansion pyrometer. What are its advantages and disadvantages?

34. Explain the calorimetric pyrometer. Write and explain the formula on which it is based. What are its limitations? Explain the thermo-electric pyrometer. What materials are used in making up the elements for different ranges of temperature?

35. Make line sketch, showing the wiring arrangement in the resistance pyrometer. Explain its principle of operation.

36. Show by line sketch the principle of the reflecting pyrometer. What is the rule for its working distance from the hot body?

37. Sketch an engine counter. What are maneuvering indicators and how fitted? Explain a differential counter gear for multiple shafts.

38. Make line sketch and explain the operation of a tachometer for high speed engines.

39. Make line sketches and explain the transmitter and receiver in a Hutchison marine tachometer.

40. Explain the principle of the Hopkins electric tachometer. What fault is possessed by electric tachometers in general and how is it overcome? Explain the McNab marine register and indicator.

41. Sketch and explain the operation of the Davison speed regulator.

42. What is the Taylor counter? The Bailey counter? Explain with line sketch the precision tacograph and its use.

CHAPTER IV.

43. Define or explain the following thermodynamic terms: (1) *heat*, (2) *quantity of heat*, (3) *temperature*, (4) *absolute temperature*, (5) *entropy*, (6) *boiling point*, (7) *British thermal unit* (*B. T. U.*), (8) *specific heat*, (9) *sensible heat*, (10) *latent heat*, (11) *total heat*, (12) *Joule's equivalent*, (13) *saturated steam*, (14) *wet steam*, (15) *superheated steam*, (16) *quality of steam*.

44. What are the three general classes of steam calorimeters? Give an example of each class, and briefly state the principle of construction and operation.

45. Sketch and explain Carpenter's throttling calorimeter, deriving the general equation for its use. Explain with diagram the graphical solution.

46. Explain the calibration method for the use of Carpenter's throttling calorimeter and derive the equation. Discuss briefly the limitations of the instrument.

47. Sketch Thomas' superheating steam calorimeter and connections. Briefly describe its operation and derive equations for its use.

48. Sketch Carpenter's separating steam calorimeter and connections and derive the equations used with it.

49. Derive equations for use in connection with the barrel calorimeter. Describe the test, stating precautions. In all calorimeter experiments what care must be exercised in sampling the steam?

50. Discuss the temperature-entropy diagram for water, and show its application to steam. Explain the difference between isothermal and adiabatic lines on the diagram.

51. Discuss the temperature-entropy diagram (1) for an ideal engine, (2) for a real engine.

CHAPTER V.

52. For what purposes are water meters employed by naval engineers? Describe the Worthington water meter. How is the rate of flow determined? What are the disadvantages attending the use of water meters, as usually constructed, on board ship?

53. Sketch and describe the Keystone water meter.

54. Make sketch in section of the Venturi meter and describe its operation. Make line sketch of the recording apparatus.

55. Derive equations for use with the Venturi meter.

56. Explain with sketches the early forms of Pitot's tube used for measuring the rate of flow of water.

57. Sketch and explain the operation of Darcy's improved form of Pitot's tube for measuring the rate of flow of streams.

58. In the pitometer, sketch the *street connection*, *rod meter* and *manometer* in place. Explain how this instrument is inserted and adjusted for use in a water main.

59. Sketch the *street connection* for use with a pitometer and explain the *traverse.*

60. What is a weir? Give general features of construction, stating the points that must be observed in order to obtain accurate results.

61. Describe the construction and operation of a tank for weir apparatus, illustrating with free-hand sketches.

62. Describe the construction, operation and use of the hook gage. Explain with sketch the triangular notched weir and write the formulas for its use. What are its advantages? Explain what is meant by *miner's inch.*

CHAPTER VI.

63. Sketch an anemometer and explain how it should be used. To what extent may its indications be relied upon?

64. Sketch the special form of Pitot's tube used in Taylor's method of measuring low air velocities. How is this used to obtain the mean velocity in a pipe of circular section?

65. Make line sketch of the manometer used in measuring low air velocities by Taylor's method and explain its use.

66. Knowing the difference between impact and static pressures by Pitot's tube in an air pipe, how proceed to calculate the rate of flow? How may a single Pitot tube be used in tests of this character?

67. Give Napier's rule for the rate of discharge of steam through a nozzle. What are its limitations? What is the direct measure of the efficiency of a steam engine? How is this usually obtained in engine tests? What are steam meters and of what value are they?

68. Into what two classes are steam meters divided? Sketch the pipe connections for the Sarco steam meter in horizontal and vertical pipes,

write the formula for the flow of steam under these conditions and explain its operation.

69. Make line sketch of the recording mechanism in a Sarco steam meter and explain its operation.

70. Distinguish between shunt and series steam meters. Sketch the nozzle plug used in the General Electric Company's steam flow meter and explain its use.

71. Explain with line sketch the General Electric Company's recording flow meter with automatic pressure correction device.

72. Explain with line sketch the General Electric Company's indicating flow meter. How does the air flow meter differ from the steam flow meter?

CHAPTER VII.

73. Explain what is meant by (1) *power*, (2) *horse power*, (3) *indicated horse power*, (4) *brake horse power*, (5) *shaft horse power*, (6) *metric horse power*, (7) *efficiency of a machine*. What is the relation between indicated horse power and shaft horse power in an ordinary steam engine, and in a steam turbine?

74. To what errors is the steam engine indicator subject and how are they corrected?

75. What is the object of calibrating indicator springs? What precautions should be observed? Make line sketch of Carpenter's indicator and gage tester and briefly describe its operation.

76. Make a free-hand line sketch, showing the essential parts of Cooley's indicator testing apparatus, and give a brief description of the apparatus.

77. Describe fully the method used for calibrating an indicator spring, using Cooley's tester. Illustrate with free-hand sketch. Explain how the results are calculated. How are pressure tests below the atmosphere made?

78. Sketch and explain the operation of the Hospitalier-Carpentier monograph. For what class of engines is it more particularly adapted?

79. Make a free-hand sketch, in section, of Ripper's mean pressure indicator, and explain the operation of the apparatus.

80. Make a line sketch of Ripper's power board and show the information that may be obtained from it. Explain its construction, showing that it is merely a special application of the slide rule. From the same sketch explain Hudson's power scale.

81. Explain in detail how to construct a logarithmic diagram for computing horse power.

82. Describe with sketch the Prony brake, explaining its use. Describe the water brake. How may a dynamo be used as a brake? What is electric horse power and how is it made use of to determine the indicated horse power? What is a belt dynamometer?

83. Sketch in section the Kenerson transmission dynamometer and explain its operation.

84. Make line sketch showing the working parts of the Emerson power scale and explain its operation.

85. Explain the principle of a torsionmeter for measuring horse power. Draw diagram and show how a shaft is calibrated, deducing the equations.

86. Show how to obtain the horse power with a torsionmeter without calibration of shafting. Why is it necessary to calibrate?

87. Explain the operation of one of the following torsionmeters, illustrating with line sketches: Denny-Johnson, Föttinger, Hopkinson-Thring, Metten. What are the advantages and disadvantages of the instrument selected?

88. Discuss briefly torsionmeters compared with the indicator, torsion readings for reciprocating engines, and curves of chest pressures and horse power.

CHAPTER VIII.

89. Define or explain what is meant by (1) *stress*, (2) *strain*, (3) *elasticity*, (4) *elastic limit*, (5) *rigidity* or *stiffness*, (6) *coefficient of ultimate strength*, (7) *coefficient of strength at the elastic limit*, (8) *percentage of elongation*, (9) *reduction of area of cross section*, (10) *modulus of elasticity*, (11) *modulus of resilience*, (12) *breaking load*, (13) *maximum load*, (14) *safe load*, (15) *factor of safety*.

90. Make a line sketch of a stress-strain diagram and explain the information that may be derived from it. What are the general features of construction of a power testing machine?

91. Show by line sketches the relative positions of pulling screws, top and pulling heads, weighing table, and test specimen, in using the Riehlé screw power testing machine for tests as follows: (1) tension, (2) compression, (3) bending and shearing.

92. Make a line sketch showing the essential features of a Riehlé screw power testing machine. Describe briefly the automatic apparatus for keeping the scale beam in balance. Describe the autographic apparatus. For what purpose is an extensometer used? What is the *yield point?*

93. Describe the behavior of the two general classes of metals, plastic and brittle, when subjected in short specimens to compressional stress. What information may be obtained in each case? For what purpose are cross bending tests made?

94. Describe the practical use of a testing machine. What information is obtained? What is placed on the *test record?* Sketch and describe the standard test pieces used in the navy.

95. Describe with line sketches the construction and operation of the Riehlé-Miller torsional testing machine. Show the details of the weighing mechanism. Explain the use of the torsion indicator.

96. Name and briefly describe the different varieties of cement. What is concrete? Reenforced concrete? What are the uses of cement on board ship?

97. Enumerate and briefly describe the several tests to which cement is subjected.

98. Sketch a cement tensile test specimen and describe how these are made.

99. Make line sketch of Fairbank's cement testing machine. Show the details of the weighing mechanism. Describe the test of a tensile specimen.

CHAPTER IX.

100. In engine lubrication distinguish between the open system and forced lubrication. What is the difference in the character of the oil used in these two systems?

101. What are the essential characteristics of the various oils used for lubricating purposes at the present time? Name and distinguish between these various lubricants.

102. What are the principal determinations in making a complete test of a lubricant? What value have these various tests?

103. Make line sketch and describe Engler's or the Boverton-Redwood viscosimeter.

104. Describe the method of determining the following information in regard to a lubricant: (1) *flash point*, (2) *burning point*, (3) *chill point*, (4) *loss by evaporation*, (5) *gumming properties.*

105. Sketch and describe the New York State Board of Health or the Cleveland flash point tester.

106. Give a brief description of an oil testing machine, illustrating with sketches. State the four methods of observation in practice, for a durability test.

107. Describe the preparations for and the method of conducting an oil durability test by the Navy Department method, using an oil testing machine.

108. What tests of oil can be made on board ship? What are the best safeguards in purchasing oil and in using it?

CHAPTER X.

109. In what ways may fuel economy be influenced? What qualities in coal govern its selection as a fuel? What tests are made on shipboard?

110. How proceed in obtaining a sample of coal for test? Describe the tests (1) for moisture, (2) for volatile matter, (3) for ash.

111. Make neat line sketch of Mahler's fuel calorimeter. Letter and name the essential parts.

112. Describe in detail the construction of the bomb used with Mahler's fuel calorimeter. What are its capacity and thickness? Why is it made so large and heavy? State the principle of operation of the calorimeter.

113. With the assistance of a rough free-hand sketch explain the method of conducting a test for calorific value, using the Mahler calorimeter. What is meant by the *water equivalent* and how is its value determined?

114. Make a neat sketch of Carpenter's improved coal calorimeter and connections. Letter and name the essential parts.

115. Draw a sectional view, showing the details of the pressure reducer used in connection with Carpenter's coal calorimeter. Describe precautions in using.

116. With the assistance of a free-hand sketch, describe the method of preparing for and conducting a test for calorific value, using Carpenter's coal calorimeter.

117. How is the curve of calibration obtained for Carpenter's coal calorimeter? What is its use? Briefly state the principle of the calorimeter. What is meant by the corrected scale reading and how is it obtained?

118. Sketch Parr's standard coal calorimeter and briefly describe its operation and use.

119. Sketch Junker's calorimeter. Letter and name the essential parts. Explain its operation in determining the heating value of a gas.

120. State briefly the requirements of the navy specifications for fuel oil. What instruments are contained in the navy portable test outfit and what are their uses?

121. Sketch the Pensky-Marten apparatus for determining the flash point and explain its operation.

122. What oils are used on naval vessels as fuel, other than *fuel oil.* What are the requirements for each?

CHAPTER XI.

123. What is the object of making analyses of smoke pipe gases? Explain how the percentage of CO_2 is a measure of the efficiency of combustion. What reagents are used in flue gas analysis? Explain the use of each. How obtain a sample of the gas?

124. Sketch the Orsatt-Muencke apparatus and explain its operation in flue gas analysis. State precautions to be observed.

125. Having given the results of the chemical analysis of a fuel and the results of flue gas analysis, burning this fuel, show how to calculate the pounds of dry gas per pound of combustible.

126. Enumerate the several items that go to make up the heat balance, showing the distribution of the heating value of one pound of combustible, and explain briefly how each item is calculated.

127. Sketch and describe the Hays CO_2 apparatus and explain its operation.

128. Make a free-hand sketch of the analyzing and recording apparatus in the Sarco CO_2 recorder, and explain the operation of the apparatus.

129. Make diagrammatic sketch and explain the essential principle of the Uehling CO_2 recorder.

130. Explain the use of time firing devices in promoting efficiency of combustion. Explain with line sketch the layout of such an apparatus on board ship.

131. Draw diagram of one of the following time firing devices and explain its operation: Corey's, old type; Corey's, new type; Kilroy's; Sub-Target Gun Company's; General Electric Company's, new type; Lobitz.

INDEX

[illegible]

[illegible]