This is a digital copy of a book that was preserved for generations on library shelves before it was carefully scanned by Google as part of a project to make the world's books discoverable online.

It has survived long enough for the copyright to expire and the book to enter the public domain. A public domain book is one that was never subject to copyright or whose legal copyright term has expired. Whether a book is in the public domain may vary country to country. Public domain books are our gateways to the past, representing a wealth of history, culture and knowledge that's often difficult to discover.

Marks, notations and other marginalia present in the original volume will appear in this file - a reminder of this book's long journey from the publisher to a library and finally to you.

Usage guidelines

Google is proud to partner with libraries to digitize public domain materials and make them widely accessible. Public domain books belong to the public and we are merely their custodians. Nevertheless, this work is expensive, so in order to keep providing this resource, we have taken steps to prevent abuse by commercial parties, including placing technical restrictions on automated querying.

We also ask that you:

+ *Make non-commercial use of the files* We designed Google Book Search for use by individuals, and we request that you use these files for personal, non-commercial purposes.

+ *Refrain from automated querying* Do not send automated queries of any sort to Google's system: If you are conducting research on machine translation, optical character recognition or other areas where access to a large amount of text is helpful, please contact us. We encourage the use of public domain materials for these purposes and may be able to help.

+ *Maintain attribution* The Google "watermark" you see on each file is essential for informing people about this project and helping them find additional materials through Google Book Search. Please do not remove it.

+ *Keep it legal* Whatever your use, remember that you are responsible for ensuring that what you are doing is legal. Do not assume that just because we believe a book is in the public domain for users in the United States, that the work is also in the public domain for users in other countries. Whether a book is still in copyright varies from country to country, and we can't offer guidance on whether any specific use of any specific book is allowed. Please do not assume that a book's appearance in Google Book Search means it can be used in any manner anywhere in the world. Copyright infringement liability can be quite severe.

About Google Book Search

Google's mission is to organize the world's information and to make it universally accessible and useful. Google Book Search helps readers discover the world's books while helping authors and publishers reach new audiences. You can search through the full text of this book on the web at `http://books.google.com/`

INTERNATIONAL
LIBRARY OF TECHNOLOGY

A SERIES OF TEXTBOOKS FOR PERSONS ENGAGED IN THE ENGINEERING
PROFESSIONS AND TRADES OR FOR THOSE WHO DESIRE
INFORMATION CONCERNING THEM. FULLY ILLUSTRATED
AND CONTAINING NUMEROUS PRACTICAL
EXAMPLES AND THEIR SOLUTIONS

GASOLINE AUTOMOBILES
GASOLINE AUTOMOBILE ENGINES
AUTOMOBILE ENGINE AUXILIARIES
ELECTRIC IGNITION
TRANSMISSION AND CONTROL MECHANISM
BEARINGS AND LUBRICATION
AUTOMOBILE TIRES

(VOL. I)

SCRANTON
INTERNATIONAL TEXTBOOK COMPANY
110B

Press of
International Textbook Company
Scranton, Pa.

29581

110B

PREFACE

The volumes of the International Library of Technology are made up of Instruction Papers, or Sections, comprising the various courses of instruction for students of the International Correspondence Schools. The original manuscript for each Instruction Paper is prepared by a person thoroughly qualified, both technically and by experience, to write with authority on his subject. In many cases the writer is regularly employed elsewhere in practical work and writes for us during spare time. The manuscripts are then carefully edited to make them suitable for correspondence work.

The only qualification for enrolment as a student in these Schools is the ability to read English and to write intelligibly the answers to the Examination Questions. Hence, our students are of all grades of education, and our Instruction Papers are, therefore, written in the simplest possible language so as to make them readily understood by all students. If technical expressions are essential to a thorough understanding of the subject, they are clearly explained when first introduced.

The great majority of our students wish to prepare themselves for advancement in their vocations or to qualify for other and more congenial occupations. Their time for study is usually after the day's work is done and is limited to a few hours each day. Therefore, every effort is made to give them practical and accurate information in clear, concise form, and to make this information include all of the essentials but none of the non-essentials. To effect this result derivations of rules and formulas are usually omitted, but thorough and complete instructions are given regarding how, when, and under what conditions any particular rule, formula, or process should be applied. Whenever possible one or more examples, such as would be likely to arise in actual practice, together with their solutions, are given for illustration.

As the best way to make a statement, explanation, or description clear is to give a picture or a diagram in connection with it, illustrations are very freely used. These illustrations are especially made by our own Illustrating Department in order to adapt them fully to the requirements of the text. Projection drawings, sectional drawings, outline drawings, perspective drawings, partly shaded or full shaded, are employed, according to which will best produce the desired result. Halftone engravings are used only in those cases where the general effect is desired rather than the actual details.

In the table of contents that immediately follows are given the titles of the Sections included in this volume, and under each title is listed the main topics discussed. At the end of the volume will be found a complete index, so that quick reference can be made to any subject treated.

INTERNATIONAL TEXTBOOK COMPANY

CONTENTS

GASOLINE AUTOMOBILES

GASOLINE AUTOMOBILE ENGINES

GASOLINE AUTOMOBILES
(PART 1)

GENERAL CHARACTERISTICS

INTRODUCTION

CLASSIFICATION OF MOTOR VEHICLES

1. In its broadest sense, the term *automobile* applies to any self-propelled vehicle, including even steam road rollers, the traction engines used in agricultural work, and locomotives. Custom, however, has narrowed the application of this term until it is now chiefly applied to the self-propelled vehicles used for the transportation, without payment therefor, of passengers for pleasure or for business purposes. When the same automobile is diverted from its original purpose to the carrying of passengers for a money consideration, it is then spoken of as a *livery automobile* or a *livery car*, implying that it is for hire. The terms *motor car*, or *car* for short, and *motor vehicle* are used synonymously with the term automobile.

Motor vehicles devoted entirely to the carrying of freight are called *motor trucks*, *auto trucks*, *delivery cars*, *delivery wagons*, or *commercial vehicles*, the latter term being sufficiently broad to embrace them all as a class distinct from pleasure vehicles. Although automobiles are sometimes hired for touring purposes, motor vehicles for the transportation of passengers for hire in cities are of two general classes, namely, *motor busses* and *taxicabs*. The latter are usually designed to carry four passengers and considerable baggage as well. They are used extensively in large cities, where they are very popular for making short business and pleasure trips. Motor busses are usually operated on certain main thoroughfares where there are no street-car lines. They carry a large number of passengers, some inside and some on top of the vehicle, and make regular trips at stated intervals between specified points, stopping to take on or to let off passengers at street crossings whenever signaled to do so. What are known as "sight-seeing" motor vehicles are automobiles especially designed for the transportation of a large number of passengers on sight-seeing trips, the places of interest along the selected routes being pointed out and described by the man in charge of the vehicle.

At present, most automobiles are driven by internal-combustion engines using gasoline as fuel, the power developed by the engine being applied to the driving road wheels by means of suitably arranged power-transmitting mechanism.

GENERAL ASSEMBLY OF THE AUTOMOBILE

2. There are two principal parts to an automobile, namely, the *chassis* (pronounced *shah-see*) and the *body*. As originally employed by the French, from whom it has been borrowed, the term chassis was used to designate only the frame of the automobile, but as now used it applies to the assembly of the running gear, consisting of wheels, axles, springs, and frame, and the power plant, which includes the engine and transmission. In other words, the chassis includes everything but the body and its accessories. Before considering in detail the construction of the various parts of the chassis, attention will be given to the assembled parts of the automobile as a whole, the names, location, arrangement, purpose, and relations of the principal parts being noted. In conjunction with this, it should be noted that while automobiles produced by different manufacturers greatly resemble one another in their general features, there is naturally a great difference in the design of the details and the location and arrangement of many parts. For this

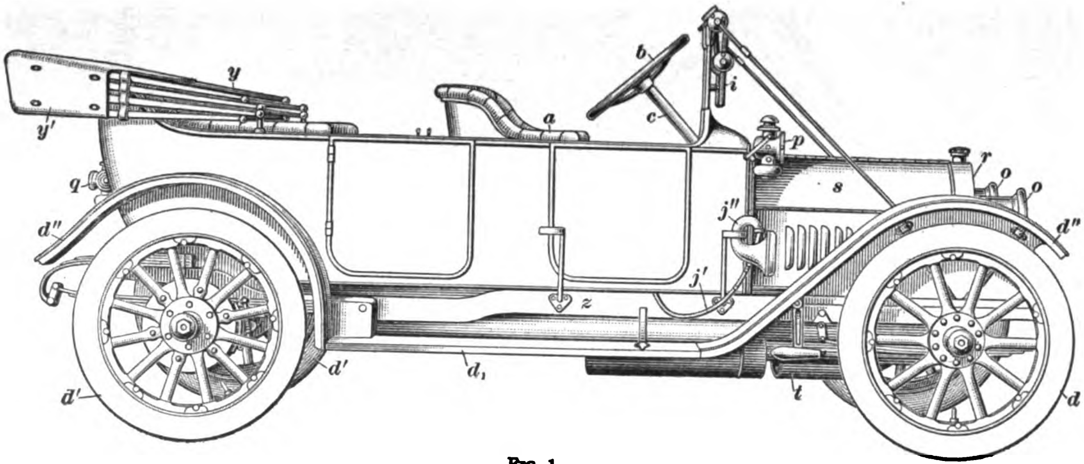

FIG. 1

reason, some of the details of the description of an automobile given here apply to only the particular motor car that is illustrated. the general features of this automobile, however, being common to all of the same type.

The various component parts of an automobile are here treated in a general way, and their construction, functions, operation, and management are explained in detail in the proper places.

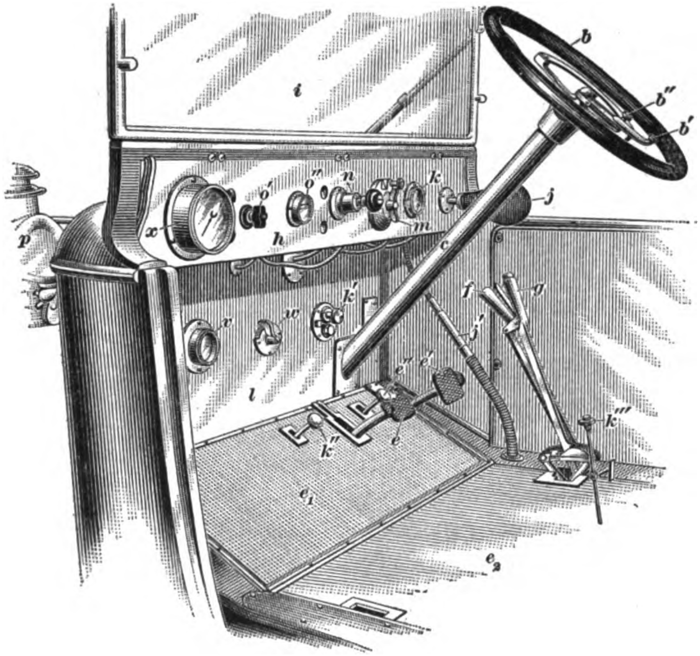

FIG. 2

3. Three illustrations of a Chalmers "Thirty-six" five-passenger automobile of the touring-car class are presented in Figs. 1 to 3. Fig. 1 shows a perspective side view of the right side of the automobile; Fig. 2, a view of the front compartment looking toward the front and the right, the left front door of the body having been opened wide; and Fig. 3, a perspective front view of the automobile. In connection with this, it should be noted that the right side of a motor car is the one at the right of the observer when he is in one of the seats and is facing toward the front; under the same conditions, the left side of the motor car is at his left.

The automobile shown is intended to seat two persons in front and three in the rear; the driver of this car sits at the right, but in some makes of automobiles the driver sits at the left.

As far as possible, the same parts are lettered alike in Figs. 1 to 3, and all three illustrations should be referred to in reading the description.

4. Just in front of the *driver's seat a* is a *steering wheel b* at the top of the inclined *steering column c*. The guiding of the car is accomplished by rotating this wheel through part of a revolution by hand. This rotation transmits motion to the *front road wheels d*, so as to turn them sidewise and change the direction of travel of the car.

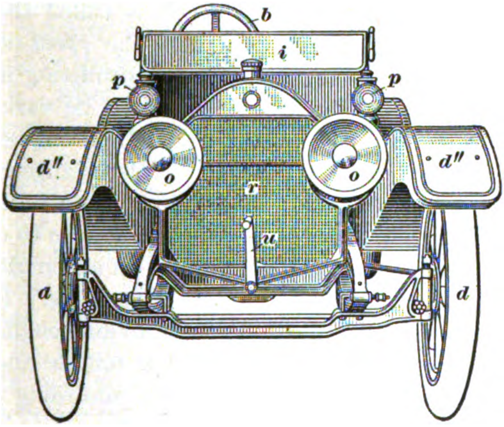

Fig. 3

Pedals e, e', and e'', which can be seen only in Fig. 2, project through the floor of the front compartment, the board e_1 being known as the *toe board*, because it is under the toes of the driver. For a similar reason, the part e_2 of the front-compartment floor is known as the *heel board*. The *clutch* *pedal e* is used for engaging the engine with the driving mechanism or disengaging the engine from it. The *service-brake pedal e'* is used for applying the brakes ordinarily employed in regular service to slow down the car or to stop its travel. The *accelerator pedal e''*, often called the *foot-throttle*, is used for increasing or decreasing the speed of the engine. All three pedals are operated by the pressure of the driver's foot.

At the right side of the car, and just forward of the driver's seat, are located two levers *f* and *g*. One, the *emergency-brake lever f*, controls a set of brakes independent of the service brakes, and is used for applying these brakes in an emergency, either in conjunction with the service brakes or alone in case the service brakes are out of order or it is considered undesirable to use them. The other lever *g*, which is called the *gear-shift lever*, the *change-speed lever*, and also the *speed-control lever*, is employed for adjusting the power-transmitting mechanism, so that the speed of travel of the car can be varied through a greater range than that obtainable in the engine, and also for giving the car backward travel. This arrangement is useful and generally necessary in order to obtain both high and low speeds of travel, and also in order to be able to climb steep hills. A gasoline engine such as is used on automobiles rotates in only one direction and cannot be run at very low speeds. The minimum speed of rotation of automobile engines is probably never as low as 100 revolutions per minute and generally not lower than 200, 300, or even more, according to the size and form of the engine.

On top of the steering wheel *b* are two small levers *b'* and *b''* (see Fig. 2) for controlling the power and the speed of the engine. Each of these levers is attached to a shaft, or tube, that extends down inside the steering column that supports the steering wheel. One of the levers is for regulating the amount of fuel delivered to the engine, and the other is for regulating the instant at which the fuel is ignited. The lever *b'* for regulating the supply of fuel is called the *throttle lever;* the lever *b''* for regulating, or varying, the time of ignition is called the *spark lever*, or *spark control.*

On the right-hand side of the *cowl board h*, to the top of which the *wind shield i* is attached, there is located a pear-shaped rubber bulb *j*. This bulb is connected by means of a flexible metallic tube *j'* to a *signal horn j''*, Fig. 1, located at the right side of the car and somewhat above the level of the floor of the car. The horn is blown by pressing this bulb with the hand. The purpose of the wind shield, which is hinged near its center so that it can be folded downwards, is to protect the occupants of the front seats from the impinging of air against the upper part of their bodies on account of the forward motion of the car.

5. In the car here illustrated, the engine is arranged to be started by means of compressed air carried in a storage tank; the pressure in this tank is indicated on the *starter air-pressure gauge k*, Fig. 2, which is mounted on the board *h*. A push button *k'* is mounted on the *dashboard l*, and upon being pushed with the hand or the foot it admits compressed air to the engine. The pedal *k''*, when depressed, starts a small air compressor that pumps air into the storage tank.

A *spark coil m* is mounted horizontally on the board *h;* it forms part of one of the two systems for igniting the fuel with which this car is equipped. One end of the spark coil projects through the board *h* and carries a switch handle by means of which the ignition may be switched off entirely, or either ignition system switched on.

The fuel for the engine of this car consists of a mixture of the right proportions of gasoline and air. This mixture is formed in a device called a *carbureter*, the gasoline being forced to the carbureter from the gasoline tank by air pressure, which is kept up automatically while the engine is running by a small engine-driven air pump. A *hand air pump n* is employed for pumping up air pressure in the gasoline tank after the tank has been filled, or when the air pressure in the tank is too low from any cause to force the gasoline to the carbureter.

6. The Chalmers "Thirty-six" automobile is equipped with two electric *headlights*. These, as shown at *o*, Figs. 1 and 3, are located at the front end of the car, and serve to light the road at night. A switch *o'*, Fig. 2, on the board *h*, is used for switching the electric current on or off all the lamps; a measuring instrument o'', called an *ammeter*, indicates the current that is flowing to the lamps. Combination oil-and-electric lamps *p* and *q* are used as signal lights at night to indicate the position of the car to other users of the road; these lamps can be seen in Figs. 1 and 3. The two lamps *p* are placed in front of the dash near its top; they are called *side lamps* or *side lights*, and are arranged to throw a clear white light ahead, thus indicating to an observer that the car is facing him. The lamp *q*, which can be seen only in Fig. 1, is called the *tail-lamp*, or *tail-light;* it is always arranged to show a red light toward the rear, thus indicating to an observer that he is looking at the rear of the car. The tail-lamp is also arranged to throw a white light at right angles to the car for the purpose of illuminating the rear license tag in localities where cars are required by law to carry such tag. The side lamps and tail-lamp are arranged to use oil in addition to electricity as a precautionary measure, the oil burners being lighted when electric current for any reason is not available. While the engine is running, the electric current for lighting the lamps is furnished by means of a small current generator, called a *dynamo*, which is driven by the engine; when the engine is stopped, the electric current is furnished by a storage battery.

7. A *radiator r*, Figs. 1 and 3, is mounted at the extreme front of the car; its purpose is to cool the water used for keeping the engine cylinders from becoming too hot.

The engine, which cannot be seen in any of the illustrations, is located in the front of the car, between the radiator and the dash and underneath the *hood s*, Fig. 1; beneath the engine is placed a *mud-pan*, or *sod pan*, *t*, which protects it from mud and dust. At the extreme front of the car is a *crank-handle*, or *starting crank*, *u*, Fig. 3, which is used for starting the engine if the compressed-air starter for any reason fails to start it.

An *oil sight-feed glass v*, Fig. 2, is placed on the dash to show whether or not the oil pump that lubricates the engine is working properly; a *carbureter adjustment w* is also carried on the dash. A *speedometer x* indicates the speed of the car in miles per hour. A valve operated by the handle k''' shuts off communication between the air tank and the starting button.

The *body* of the car, consisting of the front and rear seats, together with the necessary doors to give access to the seats, is mounted on the frame of the car; it is fitted with a *folding top* y, shown folded in Fig. 1 and covered by a *slip top cover* y'.

The car is driven by the *rear wheels* d', which are rotated by the engine. *Mud-guards*, or *fenders*, d'' are placed over all the wheels to prevent mud from splashing over the occupants of the car; the front and rear fenders are connected to *running boards* d_1, which serve as steps to facilitate entering and leaving the front and rear compartments of the body. Springs are interposed between the *frame* z of the car and the axles on which the road wheels are mounted, in order that the occupants may ride over the road in comfort.

METHODS OF PROPELLING THE AUTOMOBILE

DEFINITIONS

8. An automobile is propelled by rotating either all four wheels, or only the rear wheels, or only the front wheels, by some suitable mechanism driven, in turn, by the engine. The method of driving all four wheels simultaneously has been, and still is, used to a slight extent on one make of motor truck, but it is not employed on any regularly built pleasure cars. Propelling an automobile through its front wheels has been tried out successfully, but no cars embodying this feature are regularly in the market. Practically all automobiles are propelled by rotating their rear wheels.

Power may be transmitted to the rear wheels (1) by chains and sprockets, thus making the car *chain-driven;* (2) by means of a rotating shaft and either bevel gearing or worm-gearing, thus making the car *shaft-driven;* (3) by friction gearing, thus making it *friction-driven;* (4) by a combination of friction gearing and chain and sprocket, thus making it *friction-and-chain driven.*

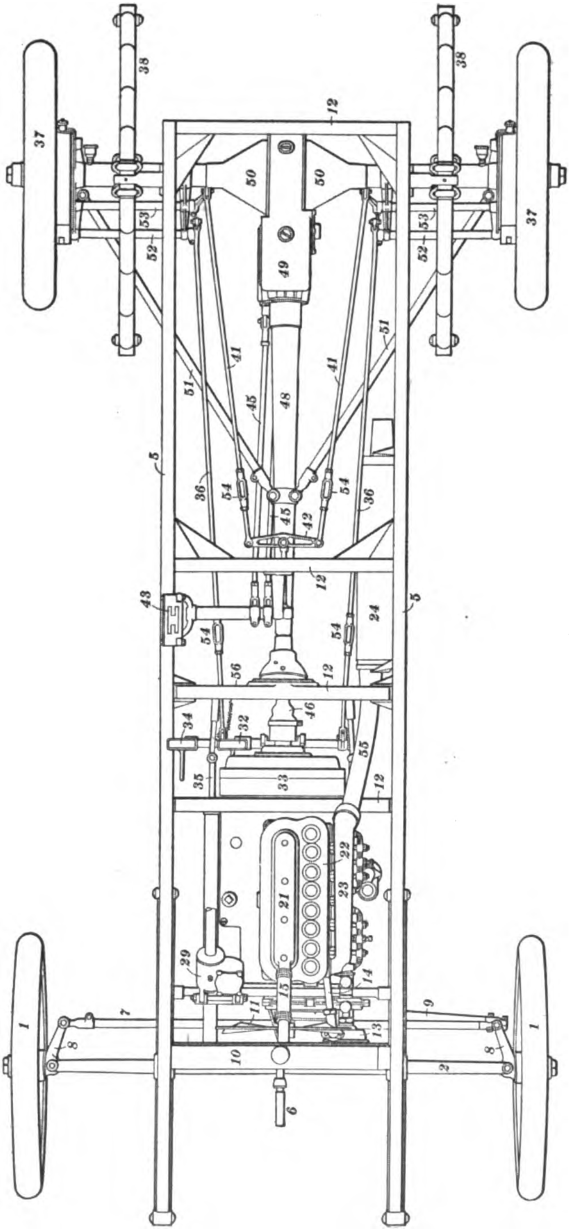
1
2
5
6
7
8
9
10
11
12
13
14
15
21
22
23
24
29
32
33
34
35
36
37
38
41
42
43
45
46
48
49
50
51
52
53
54
55
56

FIG. 4

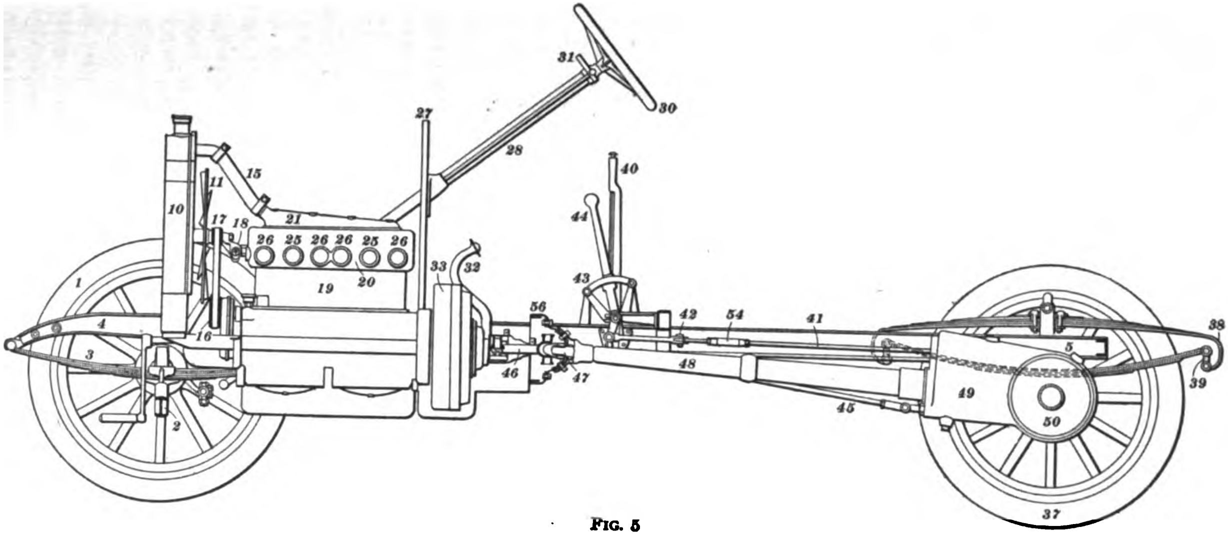
31
30
27
28
40
15
11
44
10
21
17
18
26
25
26
26
25
26
33
32
1
19
20
43
56
42
54
41
38
4
16
5
3
46
47
48
39
49
45
2
50
37

FIG. 5

Chain-driven cars may have both rear wheels driven by a single chain, which is usually located near the center of the rear axle. In such a case, the wheels are driven by shafts rotated by means of the chain, the shafts being inside the rear axle, which is then known as a *live axle*, and the car is spoken of as a *single-chain-drive car*. Pleasure cars employing this method of propulsion, however, are practically obsolete. Each rear wheel may be driven by its own chain, in which case no part of the rear axle revolves. Such an axle is spoken of as a *dead rear axle*, and a car thus driven is said to have a *double-chain drive*, or, since the chains are naturally located at the sides of the car, it is often spoken of as a *side-chain-drive car*. Although the double-chain drive is very common in motor trucks, it is employed but very little in pleasure cars at present.

Most of the automobiles in use in the United States and Canada employ a live axle and are shaft-driven.

NOMENCLATURE OF TYPICAL CHASSIS PARTS

9. Two views of the chassis of a Studebaker "20" shaft-driven automobile are shown in Figs. 4 and 5, on which the same parts have the same reference figures. Fig. 4 is a plan view, the steering column being broken off so that the steering wheel and throttle and spark levers thereon will not hide the foot-levers, or pedals, and Fig. 5 is a side elevation partly in section. Beginning at the front end of the chassis the various parts are numbered and named as follows:

1, Front road wheels
2, Front axle
3, Front springs, of the semielliptic type
4, Front end of frame, forming hanger for front spring
5, Side members of frame
6, Starting crank for starting engine
7, Tie-rod, distance rod, or cross-connecting rod with adjustable end joining arms of steering knuckles or pivots
8, Arms of steering knuckles
9, Steering rod or drag link, one end of which is attached to arm *8* of left steering knuckle, the other end of the steering rod being connected to the actuating lever arm of the steering gear
10, Radiator in which water for circulation in engine water-jackets is cooled
11, Fan to create circulation of air through radiator, thus cooling

water therein when car is standing still while engine is in operation, and aiding circulation while car is running

12, Cross-member of frame

13, Gear-driven pump for circulating cooling water

14, Water-delivery pipe from pump to cylinder water-jackets; also called water-inlet pipe and pump-outlet pipe

15, Water-outlet pipe conveying water from cylinder water-jackets to radiator

16, Large fan-belt pulley on end of engine cam-shaft

17, Small flanged fan-belt pulley

18, Bracket for supporting spindle on which small fan-belt pulley and fan rotate

19, Cylinder casting comprising four cylinders, which are cast as a monobloc; that is, combined into a single casting

20, Water-jacket surrounding upper part of cylinder and cast integral with it

21, Cylinder cover closing upper water-jacket opening

22, Plugs closing openings above the eight valves, which are put in place or removed through the openings; the spark plugs (not shown) are placed in the valve plugs over the four intake valves; priming cocks (not shown) are fitted to the valve plugs over the four exhaust valves

23, Exhaust pipe manifold

24, Muffler

25, Intake openings of cylinders, to which intake manifold is fitted

26, Exhaust openings of cylinders, to which exhaust manifold is fitted

27, Dash

28, Steering column

29, Steering-gear-case cover at lower end of steering column

30, Steering wheel

31, Quadrant on which are mounted throttle lever and spark control lever

32, Clutch pedal for operating clutch

33, Engine flywheel containing clutch

34, Service brake pedal

35, Accelerator pedal, often called foot-throttle

36, Service brake rods leading to actuating mechanism of external contracting band brakes on brake drums bolted to rear wheels

37, Rear wheels

38, Rear springs, of the scroll full-elliptic type

39, Spring shackle

40, Emergency-brake lever

41, Emergency-brake-lever rods leading to actuating mechanism of internal expanding emergency brakes on inside of brake drums

42, Emergency-brake equalizer bar

43, Quadrant, or bracket, for emergency-brake lever and gear shift lever

44, Gear shift lever

45, Gear shifting rods

46, Universal-joint assembly transmitting power from clutch to driving shaft

47, Driving, or propeller, shaft

48, Torsion tube housing the propeller shaft

49, Transmission case forming part of rear axle and containing sliding-gear transmission

50, Right and left rear-axle housings

51, Radius rods, or diagonal brace rods

52, Service-brake shafts

53, Emergency-brake shafts

54, Turnbuckles on brake rods, used for adjusting their lengths

55, Exhaust pipe, connecting exhaust manifold with muffler

56, Cross-member of frame, forming forward support for torsion tube

---

SHAFT-DRIVE DRIVING-MECHANISM ARRANGEMENTS

10. In shaft-driven cars, there are in use at present several different arrangements of the engine and clutch, the transmission, and the rear axle with reference to one another. Each of the various arrangements has its own adherents among automobile manufacturers.

The preference of automobile purchasers has caused the following general arrangment to be followed in practically every shaft-driven pleasure car: The engine, with which the clutch, in most cases, is combined, is placed at the front end of the car, with its crank-shaft in the direction of the length of the car. The transmission is then placed to the rear of the engine. In the great majority of cars, use is made of an engine with either four or six vertical cylinders. In both the Edwards-Knight car and the Winton six-cylinder car, the clutch does not form part of the engine, but is contained in the same casing as the transmission. This, however, does not change the general arrangement mentioned. In many cases the engine, the clutch, and the transmission are combined into a single unit; the combination is then spoken of as a *unit power plant.*

An example of each one of the most common of the different driving-mechanism arrangements is here given in the form of a top view of the chassis of a car actually manufactured. The different cars presented do not constitute the only examples of automobiles employing the particular arrangement of the driving mechanism each one illustrates; those shown, however, have been selected because they clearly exhibit the salient features of each driving-mechanism arrangement.

11. In Fig. 6 is presented a top view of the chassis of a Ford, model T, automobile. In this car is employed a unit power

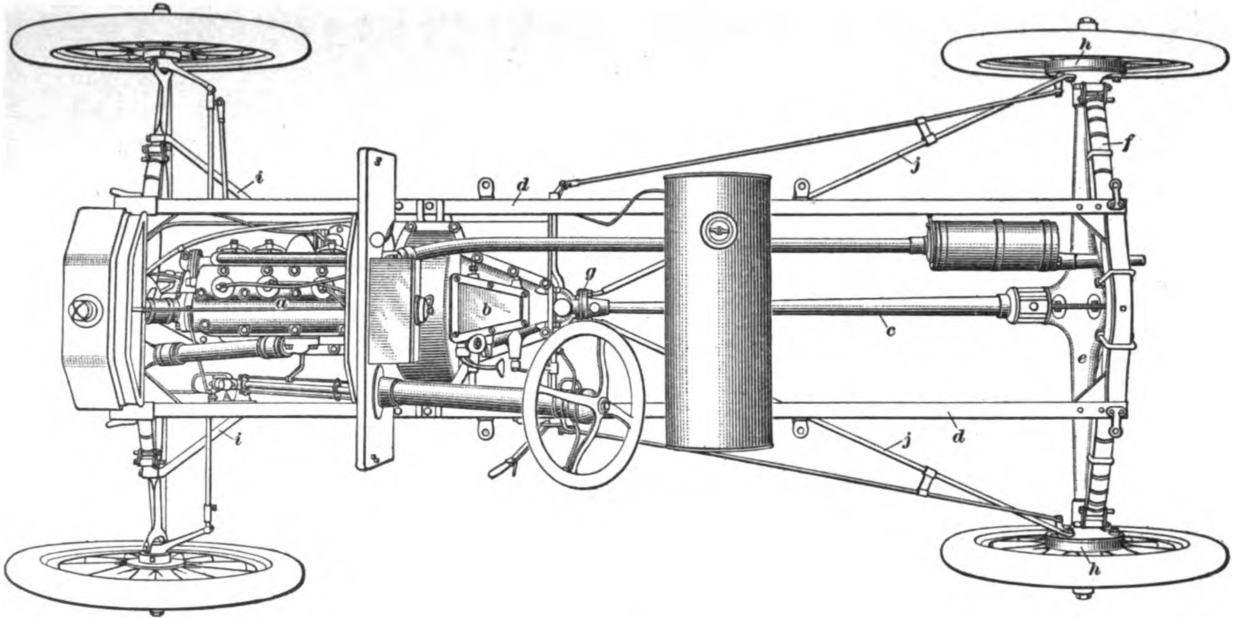

Fig. 6

plant, the top of the cylinders showing at *a*. The clutch and transmission are enclosed in the casing *b*, and the drive to the rear axle is by means of a shaft enclosed in the housing *c*. The engine is bolted rigidly to the frame *d* of the car. The rear axle *e* is connected to the frame in this case by a single cross-spring *f*; consequently, its distance from the frame is changing continually with different loads in the car and under different road conditions. Furthermore, the center line of the crankshaft and the center line of the driving shaft are not normally in the same straight line, although they always intersect. From this it can readily be seen that a yielding connection must be made between the power plant and the driving shaft so as to take care of any original disalinement, as well as that caused by the compression and extension of the rear body spring. This yielding connection is, in practice, made by a so-called ***universal joint***. In the case of the Ford car under discussion, a single universal joint is employed at the forward end of the propeller shaft, the joint being enclosed in the casing *g*.

The application of the power of the engine to the driving wheels tends to rotate the whole rear-axle housing around its center line in a direction opposite to that in which the wheels turn, and this tendency must be counteracted by some means. In the Ford car, the propeller shaft housing *c* is rigidly bolted to the rear axle *e* and is connected by means of a ball joint to the casing *g*; this housing *c* thus resists the torsional, or turning, effect due to applying the engine, and hence is often called the ***torsion tube***. This tube also resists the tendency of the axle housing to rotate, when the brakes inside the brake drums *h* of the rear wheels are applied, in a direction opposite that in which rotation tends to take place when the car is driven by the engine.

In the Ford car, the rods *i*, called *radius rods*, hold the front axle substantially at right angles to the frame *d*. The rods *j*, which also are called radius rods, tie the torsion tube and rear axle ends together, and hence serve as tie-rods. The rear axle is confined lengthwise by hinging the torsion tube at its forward end to the rear of the power plant.

The arrangement of the driving mechanism is, briefly, as follows: A unit power plant drives the rear wheels through a

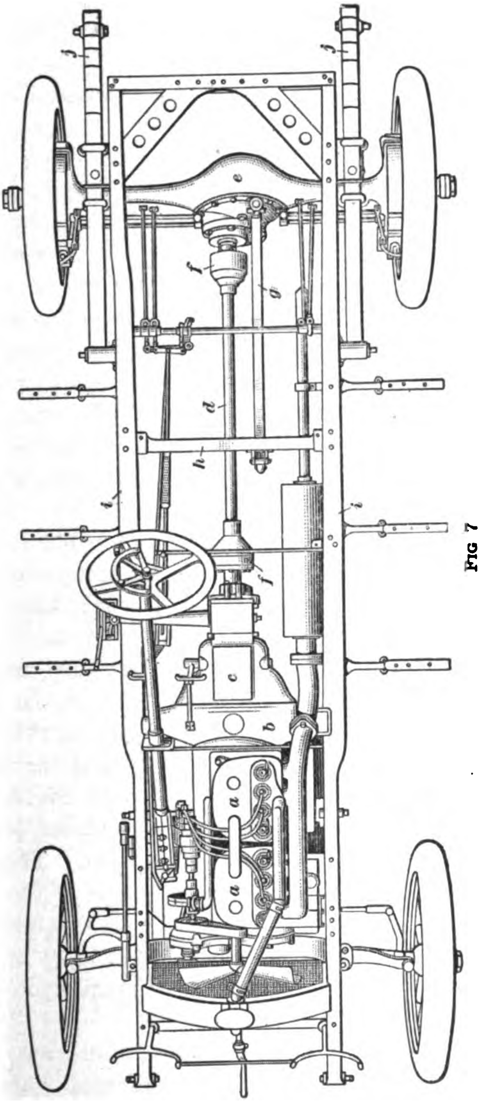

FIG 7

propeller shaft having a single universal joint at its forward end, the shaft being enclosed in a torsion tube.

12. A top view of the chassis of an Oakland, model "45," automobile is shown in Fig. 7. This car employs a unit power plant. The top of the engine cylinders is shown at *a*; the clutch is next to the engine and is contained in the casing *b*; and the transmission is in the casing *c*. The propeller shaft *d* is not housed, and a flexible connection between the rear axle *e* and the transmission is made by means of two universal joints *f*, one at each end of the propeller shaft. Rotation of the rear axle housing in either direction under the driving or braking stresses is prevented by a *torsion rod*, or *torsion bar*, *g*. This rod is anchored at its rear end to the rear-axle housing, and through a somewhat flexible connection at its front end it is attached to a cross-member *h* of the frame *i* of the car.

The frame is supported on four springs. The front springs, running lengthwise of the car, are placed underneath the frame and hence cannot be seen in this top view; they are of the semielliptic type, as is shown in *3*, Fig. 5. The two rear springs *j* are also placed lengthwise of the car, but they are outside of the frame and can therefore be clearly seen in the illustration. These rear springs are of the three-quarter elliptic type, consisting of one-half of the upper member and the whole lower member of the full-elliptic spring shown at *38*, Fig. 5. Supporting the frame of the car on four springs placed lengthwise is by far the most common method of support. The front ends of both the rear and front springs are hinged to the frame, and as they are also bolted at their middle to the front and rear axles, they serve to hold the two axles at right angles to the frame and also confine them lengthwise; hence, no radius rods are fitted or required.

The arrangement of the driving mechanism is, briefly, as follows: A unit power plant drives the rear wheels through an unhoused propeller shaft with universal joints at each end, a torsion rod, or torsion bar, preventing the rotation of the rear-axle housing.

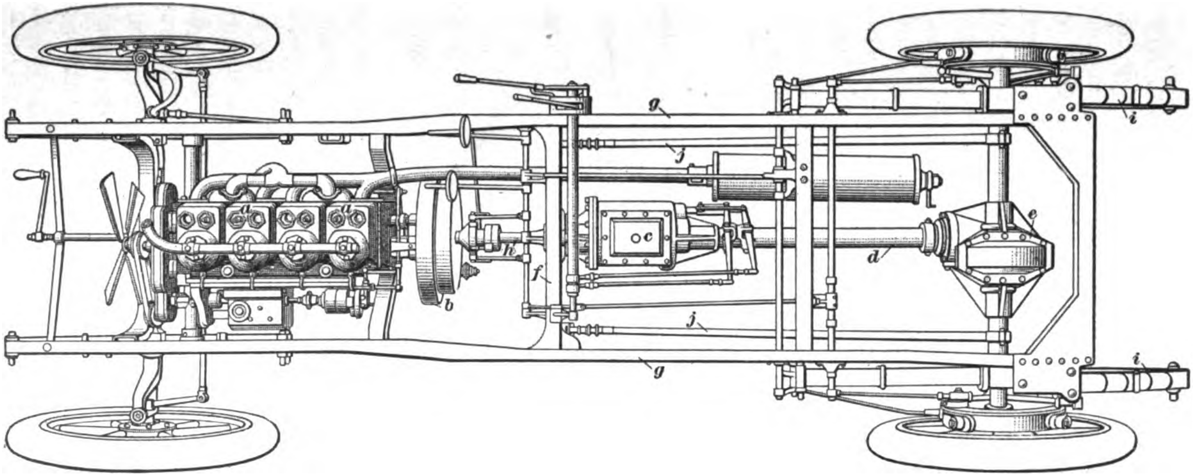

FIG. 8

13. A top view of the chassis of a Rambler, "Cross-Country" model, automobile is shown in Fig. 8. In this car, the engine and the clutch form one unit, the engine being shown at *a* and the clutch at *b*. The transmission *c* is mounted on the end of the propeller-shaft housing *d*, which, in turn, is rigidly bolted to the rear-axle housing *e*. This can be seen very clearly in Fig. 9, which shows the rear axle *e*, together with the propeller-shaft housing *d* and the transmission *c*, removed from the chassis. As the rear axle and the transmission are permanently alined, the propeller shaft inside the housing *d*, which also serves as a torsion tube, has no universal joints. The transmission is hinged to a cross-member *f*, Fig. 8, of the frame *g*. The power of the engine is transmitted through the clutch to the transmission through a short driving shaft *h* having a universal joint at each end.

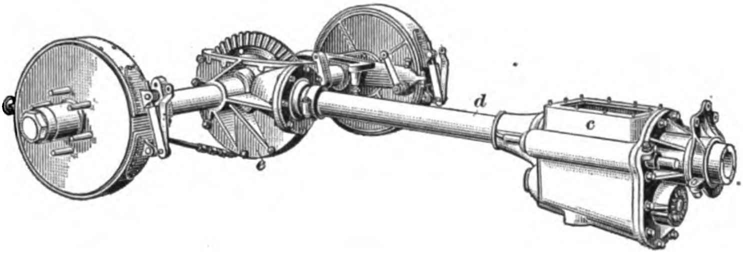

FIG. 9

The front springs are hinged to the frame at their forward end and bolted at the middle to the front axle; thus, they confine the axle lengthwise and also hold it at right angles to the frame, and hence no radius rods are needed. The front springs are placed directly underneath the frame. The rear springs *i*, Fig. 8, are on the outside of the frame, and their lower half is bolted at the middle to the rear-axle housing. The forward ends of the lower half of the rear springs are attached to the frame, and the rear ends to the upper half of the rear springs, by swinging links, called *shackles;* consequently, the rear axle is not confined lengthwise of the car by the rear springs and hence radius rods *j*, are employed to hold the rear axle, at all times, at right angles to the frame, as well as to confine it lengthwise.

Summed up briefly, the arrangment of the driving mechanism is as follows: The engine and the clutch form a unit that

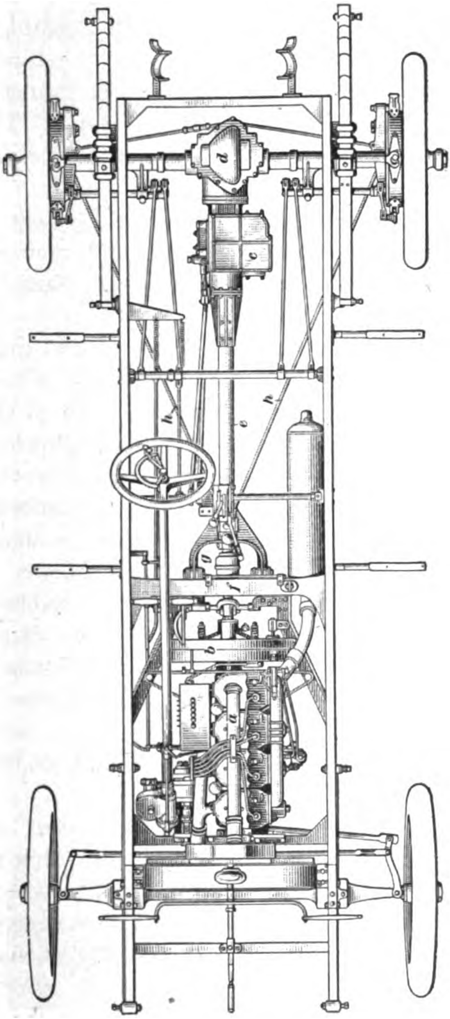

FIG. 10

drives the transmission through a short shaft with double universal joints, the transmission being carried by the forward end of the torsion tube enclosing the propeller shaft.

14. A top view of the chassis of an Overland automobile model 69, is presented in Fig. 10. In this car, the engine and the clutch form a unit, the engine being shown at *a* and the clutch at *b*. The transmission *c* is mounted on the rear axle *d*, and the propeller shaft is housed inside the torsion tube *e*, which is bolted to the forward end of the transmission case and is hinged to a cross-member *f* of the frame. The power of the engine is transmitted from the clutch to the driving shaft through a single universal joint *g*.

Some other manufacturers of automobiles using the same arrangement of engine, transmission, and rear axle as the Overland here shown employ two universal joints between the clutch and the driving shaft.

The front springs are semielliptic, are placed directly under the frame, and are hinged to it at the front. Their rear ends are shackled to the frame, and they are bolted, at their middle, to the front axle, which is thus confined lengthwise of the car by the springs. The rear springs are of the three-quarter elliptic type, like the rear springs of the Chalmers car shown in Fig. 1. The lower half of each rear spring is shackled at the front to the frame, and at the rear to the upper part of the spring, and is bolted at the middle to a rotatable spring seat on the rear-axle housing; consequently, the rear springs in themselves do not hold the rear axle lengthwise of the frame. This is done, however, by hinging the forked forward end of the torsion tube to the cross-member *f*, as shown, and tying the front end of the torsion tube to the rear axle ends by the tie-rods *h*.

This arrangement of the driving mechanism, summed up briefly, is as follows: The engine and the clutch form a unit that drives the propeller shaft housed in a torsion tube through either a single universal joint or through two universal joints, the transmission being carried by the rear-axle housing.

15. In Fig. 11 is illustrated a top view of the chassis of a Packard, model 48, automobile. In this car, as in the Overland, the engine and the clutch form a unit. The engine is shown at *a*, and the clutch is enclosed in an extension *b* of the crank-case.

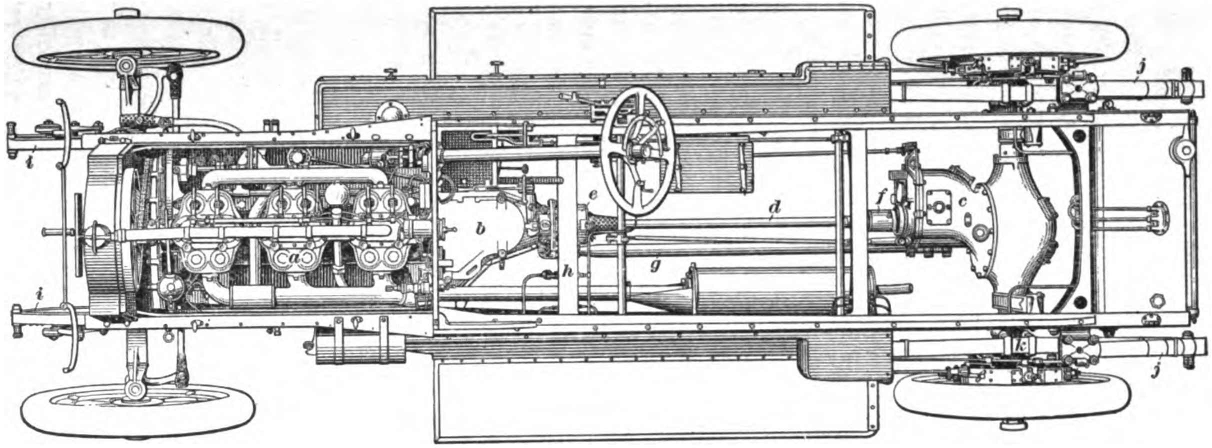

FIG. 11

The transmission is mounted in a casing *c* that is bolted to the rear-axle housing, the power being transmitted from the engine through a propeller shaft *d* that is not enclosed. The propeller shaft is provided with two universal joints *e* and *f*, which allow for lack of alinement between the engine shaft and the rear axle. A torsion rod *g* is attached at one end to the transmission casing, and at the other end to a cross-member *h* of the frame, to which it is connected by means of a spring connection that allows for vibration due to play of the body springs.

The front springs *i* are of the semielliptic type, being shackled to the frame at the rear by means of a link and bolts and hinged to it in front. The rear springs *j* are of the three-quarter elliptic type, like those on the Overland and Chalmers car, the lower half being shackled to the frame and to the upper part, and the upper quarter being attached by spring clips to the frame. The rear springs are fastened to the axle by spring clips *k*. The rear axle is held in alinement with the frame by two radius rods located directly below the side members of the frame. On account of their position they cannot be seen in Fig. 11.

The foregoing arrangement summed up briefly is as follows: The transmission is mounted on the rear axle and is driven from the engine through an exposed propeller shaft with two universal joints, the tendency of the rear axle to turn being overcome by a separate torsion rod.

16. Another form of shaft-drive mechanism, different from any thus far described, is illustrated in Fig. 12, which shows the top view of a 35-horsepower chassis of the Fiat automobile. In this car, the engine, with its clutch, and the transmission, are enclosed in separate casings. The tops of the four engine cylinders, which are cast in one piece, are shown at *a*; the clutch is enclosed in the casing *b*, which is bolted to the flywheel, and the transmission is carried in the housing *c*. Power is transmitted to the rear axle through a propeller shaft that turns inside of the tube *d*, the tube being an integral part of the pressed-steel axle housing. A coupling is provided in the short

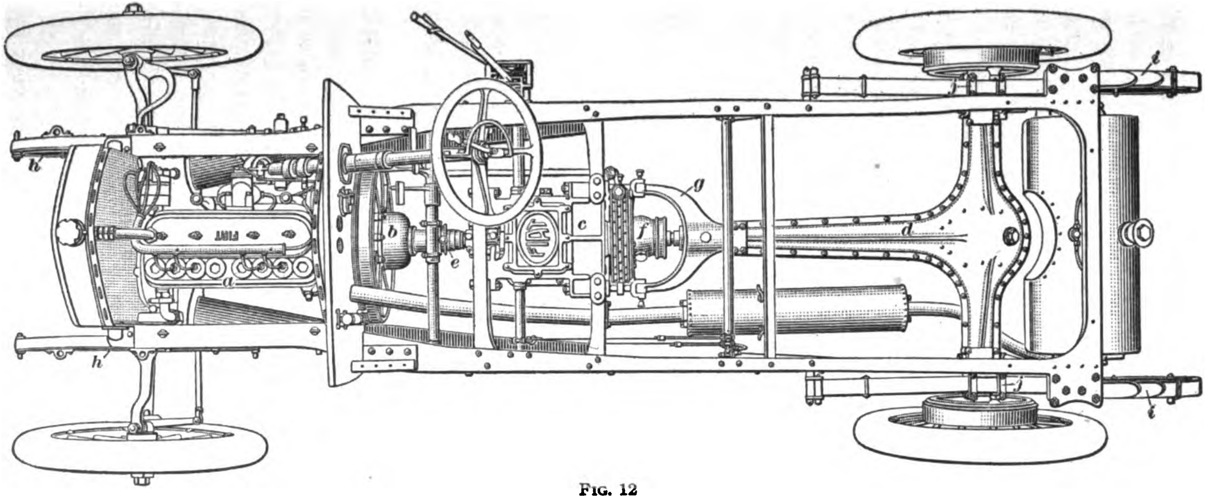

FIG. 12

shaft *e*, which connects the clutch and the transmission, and a universal joint *f* is located at the forward end of the propeller shaft to allow for any disalinement. The torsion tube *d*, which prevents rotation of the rear axle housing, is supported at the front by a yoke *g* which is hinged to the frame of the car.

The front springs *h* are of the usual semielliptic type, and the rear springs *i*, of the three-quarter elliptic type. The front springs are hinged at the front and shackled at the rear, while the rear springs are shackled both at the front and the rear and are attached to the rear axle by means of the spring clips *j*. All four of the springs are placed lengthwise with the frame. Besides performing its usual function, the propeller shaft housing *d* keeps the rear axle in alinement with the remainder of the car.

In brief, the arrangement shown in Fig. 12 is as follows: Power is carried from the engine and clutch through a short shaft and coupling to the transmission, which is supported by the frame; thence, through a single universal joint and an enclosed propeller shaft to the rear axle.

17. Still another form of arrangement of the driving mechanism in a shaft-driven car is illustrated in Fig. 13, which shows the chassis of the Reo the Fifth automobile. In this car, the propeller shaft is provided with two universal joints and is not housed, separate torsion rods being used to prevent the rear-axle housing from turning.

The tops of the engine cylinders, which are cast in pairs, are shown at *a*. The clutch is enclosed in the case *b*, and the transmission, in the housing *c*, power being transmitted to the rear axle through the propeller shaft *d* and the universal joints *e* and *f*. The clutch is connected to the transmission by the shaft *g*, which is provided with the flexible coupling *h* to allow for lack of alinement. The rear-axle housing is prevented from rotating by two torsion rods *i* (one of which is directly under the other) that are rigidly attached to the differential casing at the rear, and fastened by a flexible connection to the cross-member *j* at the forward end.

The front springs, which are hidden from view by the frame, are of the semielliptic type and are attached in the usual manner.

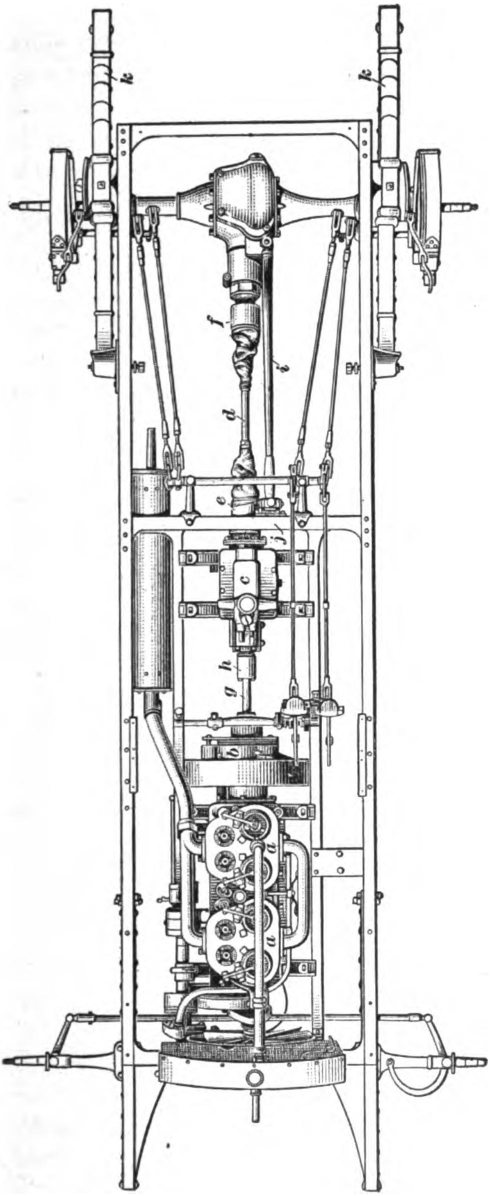

FIG. 13

The rear springs *k* are of the three-quarter elliptic type; the bottom half of each one is hinged to the frame at the forward end by means of a bracket and bolt, and is shackled to the upper part of the spring at the rear. These springs are rigidly bolted to the rear-axle spring seats and serve to hold the axle in alinement with the remainder of the car.

Summed up briefly, the arrangement is as follows: The power developed by the engine is transmitted through a clutch and a short shaft and flexible coupling to the transmission; thence, by means of an unhoused propeller shaft having two universal joints, to the rear axle, a separate torsion member being employed to prevent the axle housing from turning.

CHAIN-DRIVE DRIVING-MECHANISM ARRANGEMENTS

18. Practically all chain-driven pleasure cars now being built are of the double chain-driven type. This type of car is provided with a countershaft that is driven from the engine through a propeller shaft and that, in turn, drives the rear wheels through two chains.

19. A top view of the chassis of a six-cylinder, type 19, Chadwick automobile is presented in Fig. 14, which shows the arrangement of the various parts. In this car, the transmission and the engine with its clutch are separate units. The tops of the engine cylinders are shown at *a*, the clutch being incorporated in the flywheel *b*; the transmission is enclosed in the casing *c*, which is located at the countershaft *d*. Power is carried from the clutch to the transmission by an unhoused propeller shaft that is located directly under the longitudinal brace *e* and is provided with a universal joint at its rear end. It is to be noted that the countershaft is driven exactly like the rear axle in some forms of shaft-driven cars, except that only one universal joint is required because the countershaft is carried by the frame, and hence the alinement is not disturbed by spring deflection. From the countershaft, the rear wheels are driven by chains enclosed in the cases *f* and *g*. These chains run on sprockets attached to the ends of the countershaft and to the

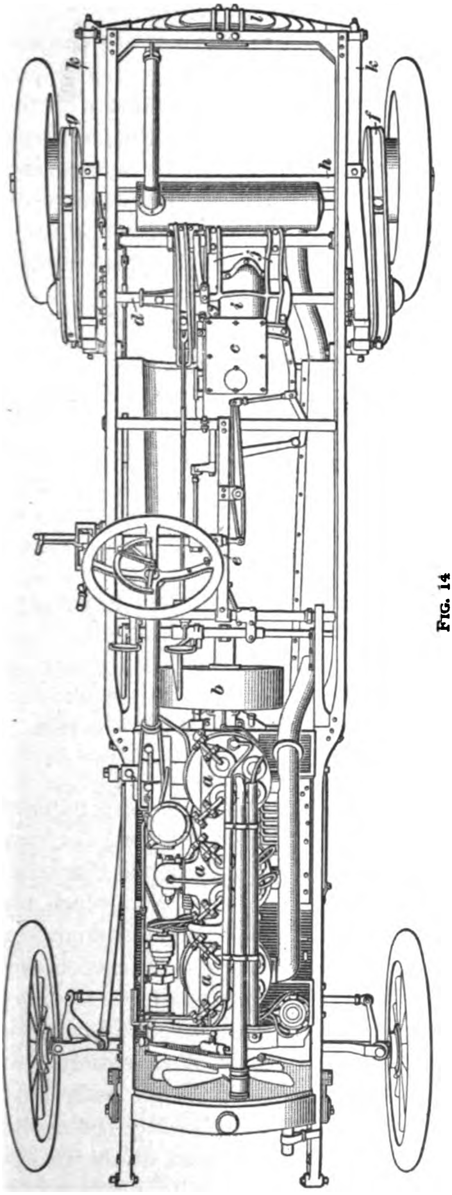

FIG. 14

wheel hubs. The wheels turn on a stationary, or *dead*, axle *h*. The countershaft housing, or differential housing, *i* is prevented from turning by the braces *j*, and the rear axle and countershaft are held in alinement with each other by means of radius rods, which form a portion of the chain cases.

The front springs, which are beneath the frame and therefore not visible in the illustration, are of the semielliptic type and are shackled at the rear and hinged in front. The rear spring is of the *platform* type. It is composed of the two-side members *k*, which are ordinary semielliptic springs, and the rear member *l*, which is an inverted semielliptic spring shackled to the rear ends of the side springs. The forward ends of the side members *k* are shackled to the frame, and the rear member *l* is attached to it by means of a bracket at its center. The springs are rigidly attached to the rear axle, which is held in alinement by the two radius rods.

Briefly, the arrangement of the driving mechanism of this chain-driven car is as follows: The power of the engine is transmitted through a clutch, a propeller shaft, a universal joint, and a transmission to a countershaft, from which the rear wheels are driven by means of chains and sprockets, the propeller shaft being unhoused, with braces holding the countershaft casing in position.

BODIES AND ACCESSORIES

TYPES OF BODIES

GENERAL CLASSIFICATION

20. The **body** is that part of an automobile which provides accommodations for the carriage of passengers. It is the superstructure that rests on the frame of the chassis, to which it is fastened in such a way that it may readily be removed to facilitate repairs or to make possible the substitution of one style of body for another.

21. Bodies may be classified under two heads, namely, *open bodies* and *closed bodies*. The former are used for running around town and for touring in summer, while the latter are popular for winter use. The folding tops with which the open bodies are usually equipped afford protection from sun and rain to both the driver and the passengers. Closed bodies are often fitted with side curtains, by means of which the space between the driver's seat and the wind shield at the dash is entirely closed, thus protecting the driver in extremely cold winter weather. The side curtains are provided with large celluloid windows through which can be seen clearly the mirror that gives the operator a good view of the road at the rear of his car. Closed bodies have recently been brought out in which the driver is protected in the same manner as the passengers; that is, the driver's seat is fully enclosed by the dash and wind shield in front and by permanent side doors with glass windows at the sides. Closed bodies are frequently provided with means for heating them, and they are often supplied with luxurious accessories, such as speaking tubes, flower holders, mirrors, and electric lights.

OPEN BODIES

22. Types of Open Bodies.—Automobiles having open bodies consist of two general types—*runabouts* and *touring cars*. The term runabout is applied in a general way to all light cars having a single seat for two or three passengers, or a seat in front for two passengers and a seat behind, called a *rumble seat*, for one passenger. The touring-car body differs from the runabout body in that it has a *tonneau*, or rear-seat, section made wide enough to seat comfortably either two or three persons. The tonneau is sometimes also provided with two side seats that can be folded up out of the way when not in use, so that the seating capacity of a touring car may be four, five, six, or seven persons.

23. Runabouts.—In Fig. 15 (*a*), (*b*), and (*c*) are shown three automobiles belonging to the runabout class. View (*a*) shows an ordinary two-passenger runabout without doors, the space on the sides between the dash and the seat being left open. A tool chest may be carried on the rear, and in some cars the gasoline tank is also carried in this position. Sometimes a supplementary, or rumble, seat is placed on top of the tool chest, thus adapting the car for three persons.

24. The open-door runabout just described has gradually given way to the more popular *foredoor*, or *torpedo*, *runabout*, an example of which is presented in view (*b*). A characteristic feature of the torpedo body is the closing of the space on the sides between the seat and the dash by doors called *foredoors*. Sometimes a foredoor is placed on only one side of the car and a *blind door*, or one that cannot be opened, on the other side. The dash on this type of car is usually extended toward the driver's seat in the form of a *cowl*, as is shown in the illustration, thus affording protection to the dash equipment. However, some torpedo bodies are made with a straight dash. Some makers style this form of runabout a *roadster*, and occasionally the seat is made wide enough to accommodate three, when it becomes a *sociability torpedo roadster*. The term roadster is sometimes applied to a four-passenger car of the touring-car type.

25. The *raceabout*, or *semiracer*, as shown in Fig. 15 (*c*), is a two-passenger runabout having the seats placed very low and the steering column inclined, or *raked*, at an extreme angle. This type of car is usually provided with a high-power engine and is not much used for ordinary purposes. The *racer* differs from the semiracer in that it is stripped of fenders, running boards, and all body work except that actually required to support the two individual seats with which such cars are fitted. This car is, of course, used only for racing purposes, and is provided with a high-power engine and an unusually large gasoline tank.

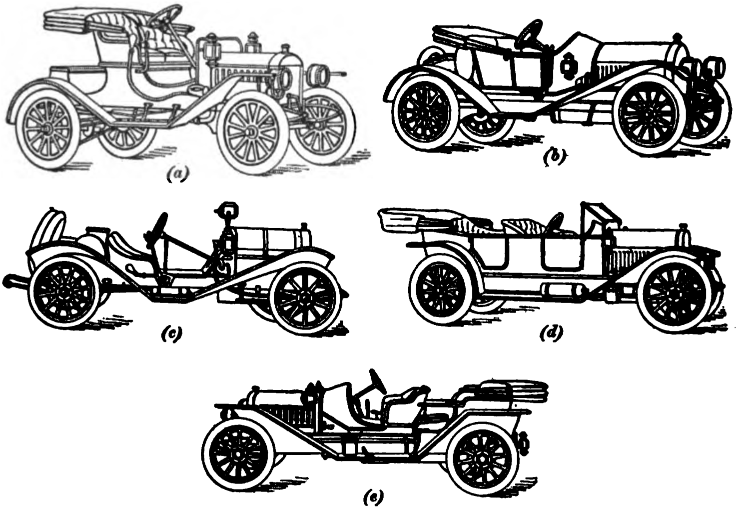
(*a*) (*b*) (*c*) (*d*) (*e*)

FIG. 15

26. Touring Cars.—The common type of touring car, such as is illustrated in Fig. 15 (*d*), is almost invariably fitted with foredoors, as well as doors closing up the space on the sides between the front and the rear seats. Ordinarily, the front seat accommodates the driver and one passenger and the rear seat is made wide enough for three passengers. A seven-passenger car is made by adding to this seating arrangement two folding side seats that are carried in the tonneau. In some cases, the control levers are located in the center of the car, so that both foredoors are used, and in other cases the control levers are on the side and the door on that side is a blind door. In still other cars, the control levers are located on the side and both foredoors are used, although it is rather inconvenient to use the door on the same side as the levers. The dash is often made with a cowl in order to protect the equipment located on it. The touring car is usually provided with a top that can be folded back out of the way when not in use.

27. In Fig. 15 (*e*) is shown the so-called *baby tonneau*, or *toy tonneau*, type of touring car. This form of body differs from the common type of touring-car body in that the rear seat provides room for only two passengers, and the tonneau is shorter, so that there is less room between the rear seat and the back of the front seat than in the regular touring car. The car shown in the illustration is not provided with foredoors, but it has doors that close the space on the sides between the seats; foredoors, however, may also be fitted.

28. The term *phaeton* is very often applied to cars of the touring-car class that carry four passengers and are similar in appearance to the toy-tonneau type. As previously mentioned, some makers designate one style of four-passenger touring car as a *roadster*.

What is commonly known as a *close-coupled touring car* is one having a body of the toy, or two-passenger, tonneau variety, the rear seat being located so that the passengers are either in front of the center line of the rear axle or just over it. In touring cars of the regular type, the rear-seat passengers are back of the center line of the rear axle.

CLOSED BODIES

29. Types of Closed Bodies.—Closed bodies for automobiles are made in a variety of forms, from those used on the taxicab, which is built for service only, to the palatial body of the high-priced limousine, upon which no expense is spared to secure the greatest possible amount of beauty and luxury. The popular forms of closed bodies are the *coupé*, the *limousine*, the *Berline body*, the *landaulet*, and the *taxicab*.

30. Coupé.—The coupé, an example of which is shown in Fig. 16 (*a*), is a type of closed body usually designed for carrying two or three persons facing forwards. A folding seat is sometimes provided, in which case the additional passenger sits with his back toward the front of the car. This car is

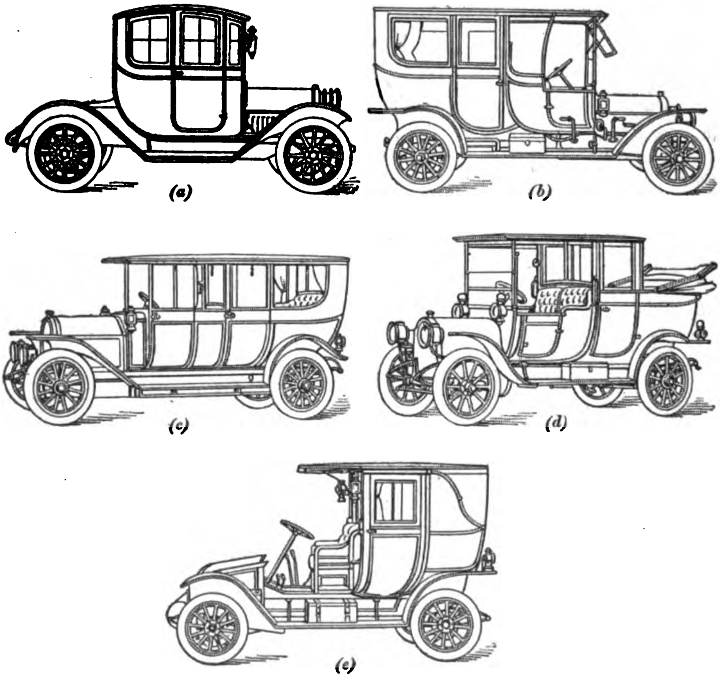

FIG. 16

especially adapted for the use of physicians in cold and stormy weather, for women out shopping, and so on.

31. **Limousine.**—For private use, the limousine body is the most popular of bodies of the closed type. It affords a maximum of comfort, combined with an elegant luxuriousness not common to other types of closed bodies. As shown in Fig. 16 (*b*), the upper part of the doors and body is made up of glass set in a sash to form windows that may be lowered into recesses provided to receive them. Thus, when the weather is warm the passengers need not suffer from heat or lack of fresh air. The glass partition back of the driver's seat is sometimes arranged so as to swing upwards against the roof, from which it is suspended. The driver's seat is sometimes enclosed by foredoors, as in view (*c*), such a body being styled a *foredoor limousine*.

32. **Berline Body.**—The Berline type of body is shown in Fig. 16 (*c*). This body differs from the limousine body in that the front seats are entirely enclosed in the same manner as the rear seats. It is also a very elegant body and is used only on high-priced cars.

33. **Landaulet.**—For use in the suburbs or in the city, a type of closed body known as the landaulet is very popular. As shown in Fig. 16 (*d*), an extension of the top covers the driver's seat, and a wind shield in front affords further protection to the driver in cold and rainy weather. In warm, pleasant weather, the glass panels back of the driver, at the sides, and in the doors may be let down into spaces provided to receive them, and the rear portion of the body, being made of flexible leather, may be folded down and back, transforming the previously closed body into one having some of the characteristics of those of the open type. When, as is sometimes the case, provision is made for removing the top over the driver's seat, the framework back of it, and the upper part of the frames of the side doors, the body is converted into one more nearly like those of the fully open, or touring type.

Landaulets are usually provided with folding seats for two passengers, who must ride backwards, the fixed rear seat accommodating two or three passengers facing forwards. In the horse-drawn vehicle from which the landaulet automobile body takes its name, there are two seats facing each other and the top is made in two sections so as to permit of folding them back and thus make an open carriage.

34. **Taxicab.**—The term taxicab is applied to automobiles of the closed-body type that are designed for hire to the general public. To adapt it for use in summer as well as in winter, in fair as well as in stormy weather, the taxicab body, as shown in Fig. 16 (*e*), is made with a top that may be folded down and back, as in the landaulet. The glass windows in the side doors may be lowered into recesses provided for them, as may also the windows at the back of the driver's seat. The taxicab body is usually provided with one regular seat, which comfortably accommodates two persons, and two folding single seats, so that the car will carry four passengers. The driver's seat, which is only partly protected, is sometimes a single seat, thus providing a place alongside the driver in which baggage can be carried. Very often this type of car has the control levers located in the center.

35. **Miscellaneous Body Types.**—Other types of automobiles employing closed bodies are known variously as the *brougham*, the *demilimousine*, and the *touring coach*. The **brougham** and the **demilimousine** greatly resemble the limousine, differing from it principally in having a smaller seating capacity. The **touring coach** is a car fitted with a closed body designed to accommodate several persons besides the driver. Large baggage-carrying capacity is provided at the rear and on top of the coach, within which are provided toilet accessories and every convenience for touring. These bodies are commonly made to order and are fitted to standard and special chassis.

ACCESSORY FITTINGS

AUTOMOBILE TOPS

36. Practically all automobile tops now in use belong to one of two types; they are either *cape tops* or *canopy tops*.

37. Automobiles having open bodies, that is, runabouts and touring cars, are provided with **flexible cape tops** that can be folded back out of the way when not in use. Fig. 17 illustrates a cape top in place on a seven-passenger touring car. This top may be folded back and protected by means of a *slip cover*, when it will appear like the top seen in Fig. 15 (*d*) or (*e*).

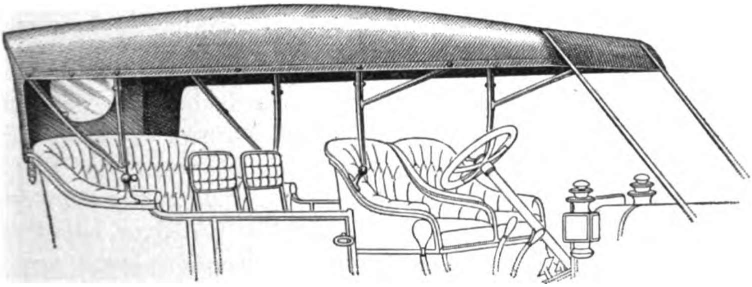

FIG. 17

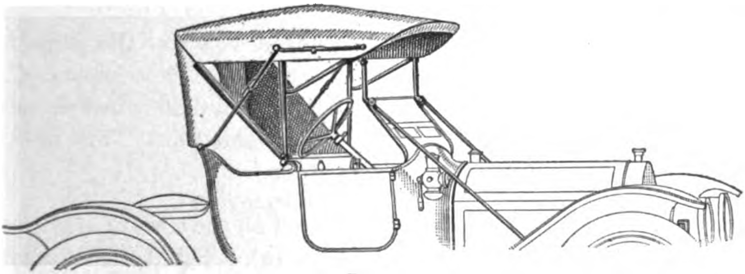

FIG. 18

A cape top applied to a two-passenger runabout is shown in Fig. 18. When folded back, this style of top has the appearance of that shown in Fig. 15 (*a*) or (*b*).

Cape tops are provided with side curtains, which are intended for use in winter or in stormy weather. When not in use, these curtains are ordinarily folded and carried under the rear-seat cushion or in pockets especially provided for them.

38. **Canopy tops** are the rigid, non-folding tops used on closed and semiclosed bodies, as shown in Fig. 16. They were originally used on open bodies, but because they were not readily detachable and had to be entirely removed when they were not needed, their use was discontinued on this type of body.

WIND SHIELDS

39. A **wind shield** is a device attached to the dash or the cowl of an automobile body for the purpose of protecting the occupants of the car from dust, rain, cold winds, etc. Wind shields consist of glass supported by metal frames, and they are usually so constructed that they may be folded or tilted at different angles. In some cases, the glass is in one piece, forming a *solid wind shield*, and in other cases it is in sections, which are either hinged together, forming an ordinary *folding wind shield* or a *zigzag wind shield*, or hinged separately, so that the top section can be tilted independently of the other, forming a *rain vision wind shield*. Practically all manufacturers include a wind shield of one of these types in the regular equipment on their cars.

In some of the older cars fitted with a cape top the place of the windshield was taken by a *storm front*, which consists of a waterproofed fabric fitted with a large celluloid window and extending vertically from the dash to the top. This storm front could be rolled up in fair weather.

40. A **solid wind shield** mounted on the cowl of the dash of a touring car is shown in Fig. 19 (*a*). This type of wind shield is made of a single piece of glass *a* contained in a metal frame *b*, and is hinged at *c* and *d* so that it can be inclined to any angle. When not in use, it can be inclined forwards over the cowl and out of the way.

41. An ordinary **folding wind shield** attached to the dash of a touring car is shown in Fig. 19 (*b*). This syle of

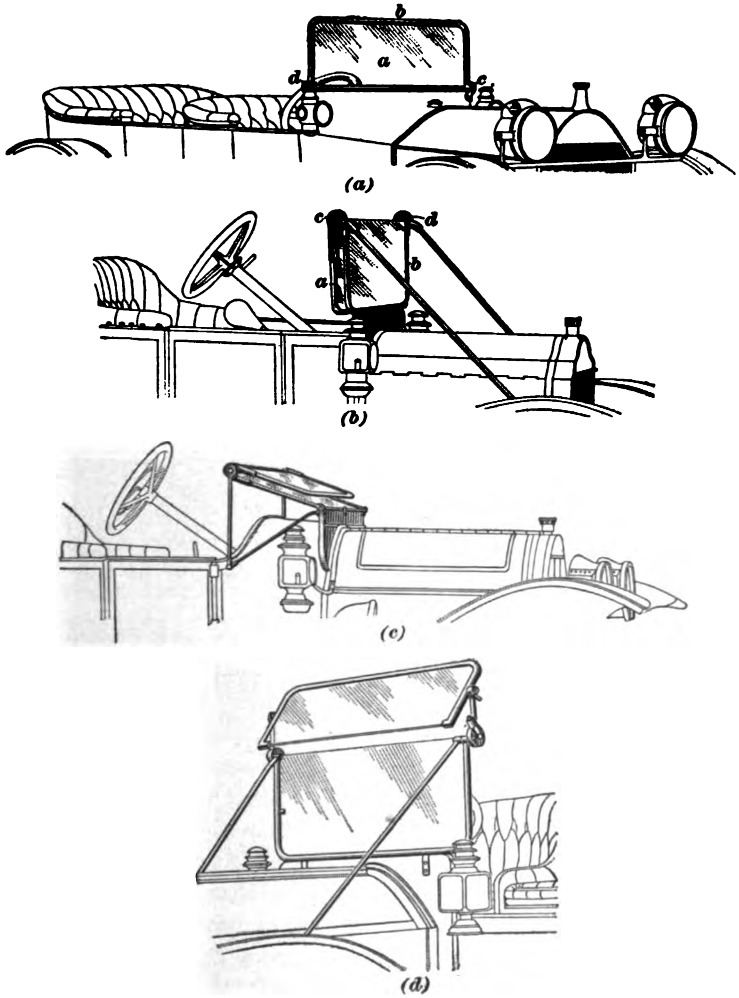

Fig. 19

wind shield is composed of two sections *a* and *b* that are hinged at *c* and *d*. The hinges are made so that the top part *a* will stay in any position in which it is placed; hence, it can be swung down below the line of vision of the driver as shown, or placed in a vertical position above the section *b*, giving the maximum height. This style of wind shield is perhaps more used than any other type.

42. The **zigzag wind shield,** which is so named because the lower part is always inclined at an angle, is shown in Fig. 19 (*c*). Except for the position of its lower section, this style of wind shield is the same as the ordinary folding type. However, it is not employed so extensively as the folding wind shield, its use being confined to the smaller cars, as, for instance, runabouts and roadsters.

43. The **rain-vision wind shield,** as illustrated in Fig. 19 (*d*), is also made up of two sections; it differs from the two preceding types in that the upper section is hinged near its middle or at its top so that it can be tilted, as shown. When in this position, a good view of the road can be obtained between the sections; this is an advantage in stormy weather when the glass may become wet and blurred. The upper section may also be swung down, as in the folding type, by means of the arms that support it, these being hinged at the top of the lower section.

In some instances the lower section of a rain-vision wind shield is so arranged that it may be inclined so as to deflect a current of air into the front compartment; in that case it is spoken of as a *ventilating rain-vision wind shield.*

SPEEDOMETERS

44. In a strict sense, a **speedometer** is an instrument that indicates the speed, either in miles or in kilometers per hour, at which an automobile is traveling at any given time. It has become customary, however, to combine with the speedometer one or two *odometers*, which are instruments that measure either in miles or in kilometers, the distance traveled by an automobile. When only one odometer is used, it registers consecutively the number of miles or kilometers traversed by the car; no means are provided for setting the instrument back to zero, and it is spoken of as a *season odometer*. When a second odometer is provided, it is always fitted with a device by which it can quickly be set back to zero at the beginning of each trip; hence, it is called a *trip odometer*. The setting-back device is always arranged so that its use will not affect the reading of the season odometer. At least one manufacturer incorporates in his speedometer a *grade meter*, which registers, in per cent., the grade that the car is ascending or descending. Thus, as the term is used at present, a speedometer is expected to have at least one odometer incorporated in it, and it may have two odometers and also a grade meter.

45. The speedometer is usually driven from one of the front wheels; the reason for this is that these wheels have practically no slip on the road in comparison with the rear wheels, or in other words, their speed is always in proportion to the car speed. The speedometer is usually mounted on the dash or the cowl board, where it can readily be seen by the driver.

In applying a speedometer to a car, care must be taken to obtain gearing that is suitable for the size of the front tire; thus, a 36-inch front tire requires different gearing for the speedometer than a 30-inch tire. Hence, the size of the front tire should always be specified in an order for a speedometer, so that the dealer will be enabled to forward the proper gears. When improperly geared, the speedometer will indicate a wrong speed as well as a wrong distance.

46. In the speedometers most widely used, the speed indication is obtained (1) by centrifugal force, (2) by magnetic induction, (3) by pressure exerted by a fluid, or (4) by an electric current.

In *centrifugal speedometers*, either the principle of the ordinary fly-ball governor commonly used on steam engines is employed, or the so-called ring governor is used. In either case, centrifugal force acts on weights whose center of gravity is outside the axis around which they revolve, the weights being revolved by a flexible shaft driven from one of the front wheels. Centrifugal force tends to make these weights fly away from the axis of rotation.

In *magnetic speedometers*, either a permanent magnet or a series of permanent magnets is revolved by a flexible shaft from one of the front wheels, the revolving magnet or magnets exercising a pull on a drum that can oscillate against the resistance of a coiled spring.

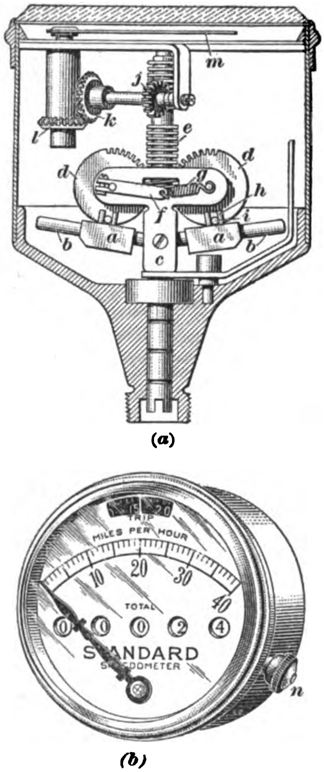

(a)

(b)

FIG. 20

In *fluid-pressure speedometers*, either a liquid or a gas is acted on by a suitable device that creates a pressure proportional to the speed of the wheels, which pressure is indicated on a dial graduated to miles or kilometers per hour.

In *electric speedometers*, a very small dynamo is driven by one of the front wheels, the voltage of the current delivered by the dynamo being measured by a voltmeter carried on the dash of the car, this voltmeter being graduated to miles per hour instead of to volts. The voltage of the dynamo used is directly proportional to the speed at which its armature is revolved, and hence is also proportional to the speed at which the front wheels revolve.

47. The Standard speedometer, which is shown in section in Fig. 20 (*a*) and in perspective in (*b*), belongs to the class of speedometers operated by centrifugal force. It has two weights *a* that are free to slide on the rods *b*, which are hinged to the stem *c*. This stem has mounted on it two segments *d* whose teeth engage those of a rack *e* that is movable in a longitudinal direction. An arm *f* is clamped to the spindle of each segment, and the free end of each arm has hooked to it a coiled spring *g*. Each of the sliding weights *a* carries four pins *h*, two on each side of each segment *d*, between which fits loosely a cross-pin *i* carried by each segment. The flexible shaft driven by one of the front wheels rotates the stem *c*, and, under the influence of centrifugal force, the weights *a* slide outwards; in doing so, the weights rotate the segments *d*, thereby putting tension on the springs *g*, until the centrifugal force of the weights equals the spring tension. The rotation of the segments moves the rack up or down; the movement of the rack is, by means of the pinion *j* and the bevel gears *k* and *l*, transmitted to the pointer *m* moving over a scale graduated in miles per hour.

The odometer part of the speedometer is purposely omitted in the sectional view in order to show the speed-indicating mechanism more clearly. A knob *n*, view (*b*), is used for resetting the trip odometer to zero.

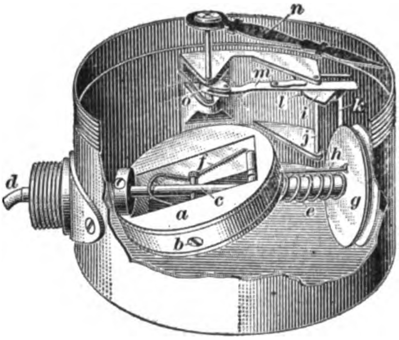

FIG. 21

48. The speed-indicating mechanism of the Jones speedometer is shown in Fig. 21, all the odometer parts being removed for the sake of clearness and the case being partly broken away. A ring governor having the shape shown at *a* is employed. This governor is pivoted by the pin *b* to the steel shaft *c*, which is rotated by a flexible shaft *d* driven by one of the front wheels. The rotation of the shaft *c* causes centrifugal force in the ring *a*, making it tend to assume a position at right angles to the shaft; this tendency is resisted by a coiled spring *e* that is compressed by the motion of the ring until the centrifugal force of the ring and the spring tension are equal. At very high speeds, an auxiliary spring *f* comes into action. A brass tube, to which is attached the brass spool *g*, can slide along the shaft *c*, and it is connected to the ring *a* by means of a link *h*; consequently, as the ring moves toward a position at right angles to the shaft, the spool *g* is moved to the left. In doing so, the spool pulls around a cam *i* that is pivoted by the shaft *j*, a pin *k* rigidly attached to the cam *i* engaging the slot of the spool. The face of the cam bears against a pin *l* carried by the link *m*, which is hinged to an arm fixed to a shaft carrying the pointer *n* that, in the assembled instrument, moves over the graduated scale, showing the speed. The cam pushes the link *m* to the left, thereby rotating the pointer *n*. A coiled spring *o* insures that the pin *l* is always in contact with the face of the cam *i*, its one end being attached to the shaft that carries the pointer.

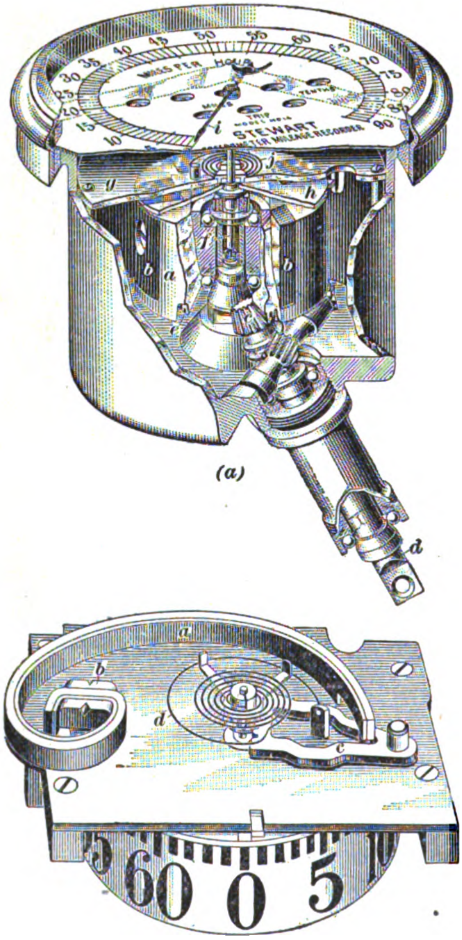

(a)

(b)

FIG. 22

49. The Stewart multipolar speedometer, a perspective view of one model of which, with enough of the casing and dial broken away to show the speed-indicating mechanism, is presented in Fig. 22 (*a*), belongs to the class of speedometers operating by magnetic induction.

The rotor *a* is made of a non-ferrous metal and has inserted in it four permanent magnets *b*. This rotor is mounted on a pair of ball bearings and is revolved by the bevel pinion *c* on the solid driving shaft *d* that meshes with the internal gear *e*. The shaft *d*, in turn, is driven from one of the front wheels by a flexible shaft, not shown. The central stud around which the rotor revolves is recessed and has at the bottom of the recess a jeweled bearing for one end of the shaft *f*, the second bearing for this shaft being in the stationary plate *g*. A circular disk *h*, made of an alloy having a low electrical resistance, is fastened to the shaft *f*; a pointer *i* is also attached to the same shaft. One end of a hair spring *j* is fastened to the shaft *f*, its other end being attached to the stationary plate *g*. It will be observed that there is no mechanical connection between the rotor and the rotatable disk *h*.

In operation, the revolution of the rotor causes the disk *h* to revolve in the same direction, this tendency being resisted by the hair spring *j*, and, consequently, the disk *h* turns until its tendency to revolve just balances the tension of the hair spring. The tendency of the disk *h*, and hence of the pointer *i*, to revolve is proportional to the speed of the rotor; thus, for each change in the car speed, the disk *h* assumes a new position, thereby indicating the speed on the dial by means of the pointer moving with the disk.

50. Experience has demonstrated that, under great changes of temperature, the electric resistance of the disk pulled around by the magnets of magnetic speedometers is subject to change; under such conditions, therefore, a magnetic speedometer is liable to indicate wrong speed. To overcome this fault, many Stewart speedometers are fitted with a *temperature-compensating device*, which is shown in Fig. 22 (*b*), applied to the hair spring of a different model of instrument from that shown in (*a*).

The compensator consists chiefly of a laminated strip *a* of steel and brass that is coiled as shown, one end of it being anchored at *b*, and the other end being free. The free end of the strip uncoils slightly when the temperature rises, because the brass in it expands more than the steel; and it coils up more when the temperature drops, because the brass contracts more than the steel. The movement of the free end of the strip *a* is transmitted to a sector *c* that meshes with a pinion, to which the one end of the hair spring *d* is attached. The uncoiling of the strip lengthens the hair spring on a hot day, and the coiling up of the spring shortens the hair spring on a cold day, thus causing it to offer more resistance to the pull of the magnets of the rotor. Changes in the electrical resistance of the disk pulled around by the rotor magnets are thus compensated for by increasing or decreasing the resistance of the spring opposing the pull of the rotor magnets.

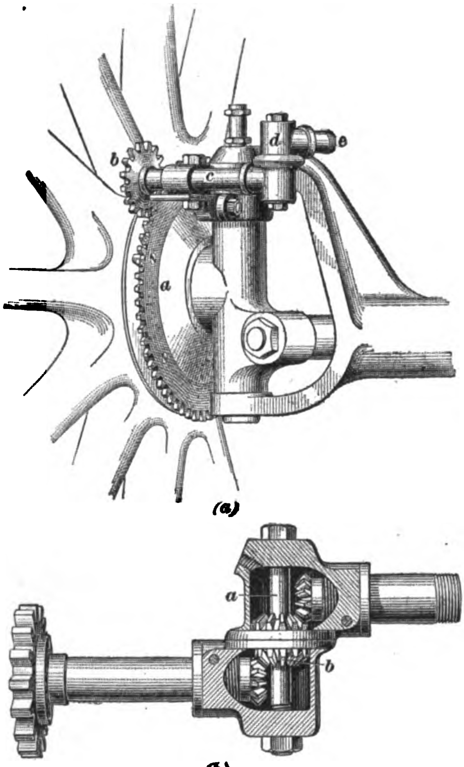

(a)

(b)

FIG. 23

51. Practically all speedometers are driven in the manner indicated in Fig. 23 (*a*). A large spur gear *a* is bolted to the hub of one front wheel and central with the hub; with it meshes a pinion *b* fastened to a shaft inside the tube *c*. This shaft, through a series of four bevel gears enclosed in the casing *d* drives another shaft in the tube *e*, to which the flexible shaft leading to the speedometer is attached. The casing *d* is made in two halves that can swivel on each other; consequently, as the lower part is held rigid with reference to the wheel, the upper part can swing in a horizontal plane. By this means the flexible shaft is not subjected to bending every time the front wheels are turned, and its life is thus greatly increased.

The combination of the casing parts with its four bevel gears and its two solid shafts forms what is variously known as a *flexible-joint drive*, a *swivel-joint drive*, or a *pivot-joint drive*.

The internal construction of a swivel joint, as used in connection with the Hoffecker speedometer, is shown in (*b*). The bolt *a* forms the pivot on which the two parts of the casing can swivel; it has mounted on it loosely the double bevel gear *b*, which transmits the motion of the lower shaft to the upper shaft.

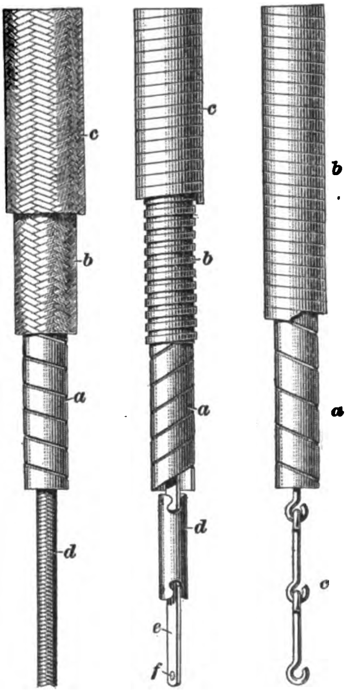

(a) (b) (c)

Fig. 24

52. The flexible shaft used with speedometers consists of two members, namely, a protective flexible casing and a flexible driving member. The flexible casing may be metallic tubing, or it may be braided and waterproofed fabric over a flexible metallic core, inside of which is the flexible driving member. In Fig. 24 are shown short sections of three different types of flexible shafts in common use.

In view (*a*) is presented the flexible shaft used with the Hoffecker speedometers. The casing consists of a metallic core *a* coiled from flat stock; this core is covered with two layers *b* and *c* of waterproofed flexible braided fabric. The flexible driving member *d* consists of seventeen strands of very fine piano wire that are woven together.

In the flexible shaft used with the Warner speedometer, and shown in view (*b*), the flexible casing consists of a flexible steel core *a* made by coiling from two strips of flat stock; this core is slipped inside a regular flexible brass tube *b*, such as is used for automobile horns. The brass tubing, in turn, is protected by a casing *c* having the form of an ordinary helical spring. The flexible driving members consist of a series of cylindrical links *d* to which are hinged flat links *e*, pins being passed through holes *f* that are somewhat larger than the pins. Owing to the shape of the slots in the links *d*, considerable motion in all directions is possible between all links.

The Stewart speedometer uses the flexible shaft presented in view (*c*). The casing consists of the usual core *a* coiled from flat stock; this is kept in shape and protected by the flexible brass tube *b*. The driving member consists of a series of like links *c* hooked together, the two hooks of each link being at right angles to each other.

GASOLINE AUTOMOBILES

(PART 2)

AUTOMOBILE RUNNING GEAR

WHEELS AND AXLES

WHEELS

1. Types of Motor-Vehicle Wheels.—Most automobiles are equipped with *wooden wheels* of the so-called *artillery type*, a form of wheel used on gun carriages and one capable of withstanding severe shocks under heavy loads. Early types of automobiles were equipped with *wire wheels;* that is, wheels having wire spokes. Such wheels are again coming into use on account of the progress made in wire-wheel construction. Wooden wheels of the artillery type are known as *compression wheels*, because the spokes in the bottom half of the wheel carry the weight and are therefore in compression. Wire wheels are known as *suspension wheels*, because the spokes supporting the hub are in tension, that is, drawn up tightly, and the load may be said to be suspended by these spokes.

2. Wooden Wheels.—Artillery wheels are usually constructed with the spokes set in a single circle around the hub, between the flanges of which they are securely clamped by means of bolts. As compared with wire wheels, this type of wheel is more easily cleaned, is more elastic, and is not subject to deterioration on account of rusting. Ordinarily, the spokes lie in a plane perpendicular to the longitudinal center line of the hub, but in a few cases they are *dished;* that is, they are set inwards at the hub and are not perpendicular to the center line of the hub. The dished construction is claimed by some manufacturers to give the wheel greater strength to resist lateral or sidewise stresses, as when turning corners. In most automobiles equipped with wooden wheels, each front wheel has ten spokes and each rear wheel, twelve; although, in some cases, both front and rear wheels are provided with twelve spokes each.

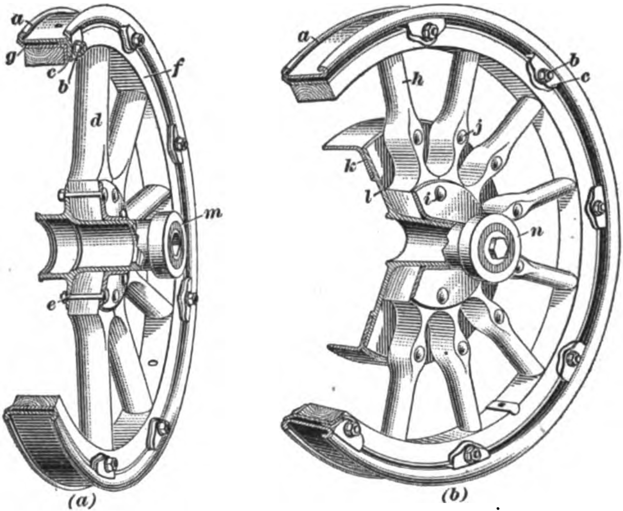

FIG. 1

3. The construction of a typical automobile wheel is shown in Fig. 1, which illustrates the front and rear wheels used on the Packard car. Part of each wheel is cut away in order to show the arrangement of the parts at the hub. Except for the different number of spokes and the different requirements at the hubs, the construction of the two wheels is identical. As shown, they are fitted with demountable rims *a*, which can be taken off quickly by removing the nuts *b* and the cleats *c*. The front wheel, which is illustrated in view (*a*), contains ten *spokes d* set around the hub in a single circle and held in place by bolts *e* that pass through the hub flanges. The *felloe* *f* and the spokes are bound in place by the steel rim *g*, which is pressed over the felloe.

In view (*b*) is shown the rear wheel, which contains twelve spokes *h* arranged in a single circle, like the spokes in the front wheel. These spokes are held in place by bolts *i* that pass through the hub flanges and bolts *j* that are used for attaching the brake drum *k*. The bolts *j* pass through the brake drum *k*, the hub flange *l*, and the spokes, thus tying, or binding, these parts together. Part of the hole in the hub is squared in order that the wheel may be driven by the squared end of the axle shaft.

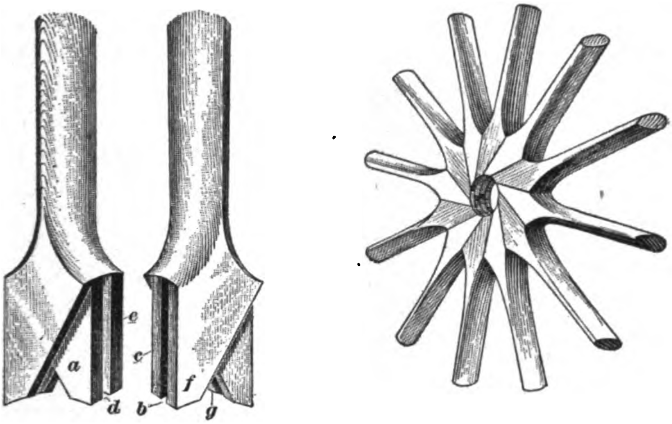

FIG. 2

The hub caps *m* and *n* are provided to keep dust and dirt out of the hubs and to give the hubs a finished appearance.

4. Fig. 2 illustrates both the construction and the arrangement of the spokes in the Schwarz patent wheel, which is used on a large number of automobiles. The mitered joints at the hub end of the spokes are made to overlap by using the mortise-and-tenon joint. When the spokes are assembled, the tenon *a* fits into the mortise *b*, tenon *c* into mortise *d*, and the inner tenons *a* and *e* are overlapped by the outer tenons *f* and *g*. The spokes are thus so interlocked that they cannot work loose, and they support one another in a compact, true assemblage. The spokes are put together under pressure with glue, and the appearance of the spokes at the hub when assembled is as shown at the right in Fig. 2.

5. **Wire Wheels.**—For automobile use wire wheels are constructed on practically the same principle as ordinary bicycle wheels. Usually, the spokes are arranged about the hub in two circles, one set of spokes being attached to the inner hub flange and the other set to the outer hub flange. All the spokes are tightened to exactly the same tension, so that they hold the hub in a central position and equalize the strain on the hub and the rim. The principal advantages claimed for wire wheels over wooden wheels are that they are stronger and will withstand a greater driving stress in proportion to their weight. It is also claimed that wire wheels keep cooler than wooden wheels, on account of their ability to radiate heat more readily, and hence the tires are not affected to so great an extent by the heat generated when rotating rapidly.

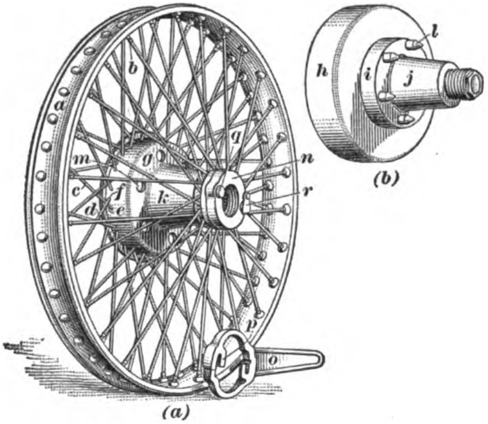

FIG. 3

6. An example of an American-made wire wheel is the **McCue wheel,** one form of which is illustrated in Fig. 3 (*a*). This wheel, as shown, contains two rows of spokes, one row being attached to the inner part of the hub and the other row to the

outer part. There are forty-two spokes in the inner row and twenty-eight in the outer row, so that the hub is suspended at seventy points. Each spoke is fastened to the rim *a* by means of a nipple *b*, into which the spoke is screwed. The spokes are in pairs; that is, two spokes are formed of one piece of wire, which is passed through two holes in the hub casing and attached at two different points on the rim. For example, the spokes *c* and *d* are formed of the same piece of wire, which extends from the rim through the hole *e* and is bent over on the inside of the hub casing *g* and brought out through the hole *f*, from which it extends to another point on the rim. The two spokes thus formed cross at an angle close to the hub, as shown. In the manufacture of the wheel, all the spokes are tightened to exactly the same tension.

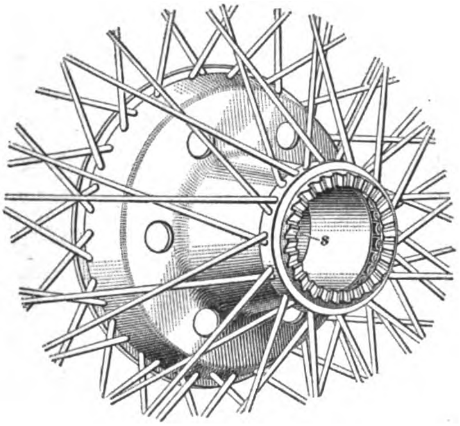

FIG. 4

Fig. 3 (*b*) shows the inner hub that fits inside the hub casing *g*. As will be observed, this inner hub is made for a rear wheel and carries the brake drum *h*. The inner hub and the outer casing are made with a taper fit, the part *i* fitting into *g* and the long part *j* fitting into *k* of the outer casing. The driving strain is taken by pins *l* that engage with the holes *m* in the outer casing. The wheel is held in place on the inner hub by means of a nut *n* that screws on the end of the hub and presses against the end of the outer casing, thus preventing the parts from separating. The nut *n* is screwed in place by means of a wrench *o*, which is provided with hooks *p* that engage with projections on the nut. One of these projections is shown at *q* and the other is covered by the safety latch *r*.

The end of the outer casing of the wheel hub is shown in Fig. 4. The projection, or pin, that is covered by the safety latch, shown in Fig. 3, forms a pawl that extends through the nut and engages with the ratchet teeth *s*, Fig. 4. This pin, or pawl, is fitted with a coil spring that pushes it out, disengaging it from the ratchet when the safety latch is moved to one side. When the wheel is to be taken off, the wrench *o*, Fig. 3, is placed on the nut and turned until the hooks *p* engage the pins, or projections, on the nut. This operation automatically pushes the safety latch *r* aside and allows the pawl and ratchet to become disengaged. The nut can then be unscrewed. In putting on the wheel, the nut *n* is first screwed on the hub and then, when the wrench is removed, the safety ratchet snaps back into place, forcing the pawl into the teeth on the ratchet *s*, Fig. 4, and locking the nut and, consequently, the wheel in position.

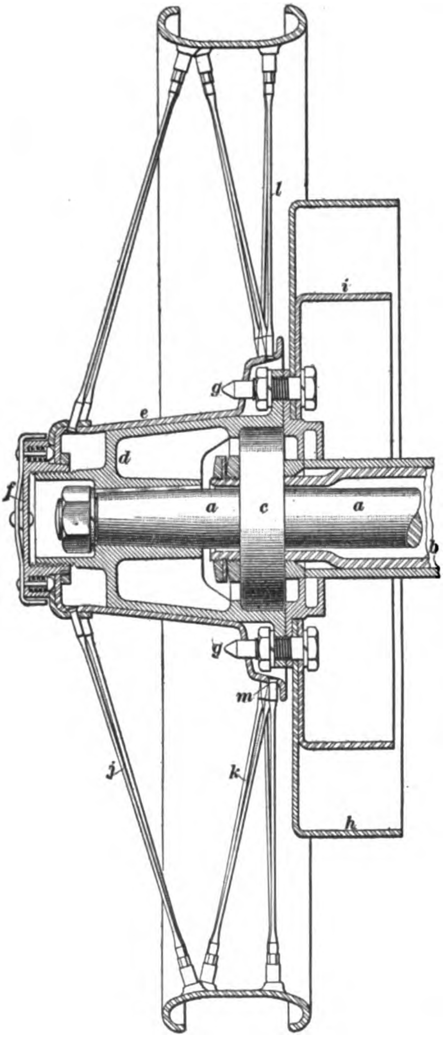

FIG. 5

It is to be noted that the wire wheel just described is a *detachable wire wheel;* that is, it can be readily removed. Generally, where these wheels are used, a spare wheel is carried for use in case of tire trouble.

7. Another form of McCue wheel is provided with three rows of spokes, as is illustrated in Fig. 5, which is a sectional view of a rear wheel, showing the inside construction of the rear hub, as well as the arrangement of the spokes. The axle shaft *a*, to which the wheel is fitted, turns freely in the stationary tube *b* of the axle housing. The ball bearing *c* is mounted on the outside of the tube *b*; the inner wheel hub *d*, which is keyed to the axle shaft, turns on this bearing. The hub casing *e* fits over the inner hub *d* and is held in place by the cap *f*, the driving stress being transmitted through the pins *g*. The brake drums *h* and *i* are so bolted to the inner hub that they rotate with it. The three rows of spokes are shown at *j*, *k*, and *l*, the rows *j* and *k* containing the same number of spokes. The spokes of this wheel are made separately, instead of in pairs, as in the wheel illustrated in Figs. 3 and 4, each spoke being attached to the wheel hub by having the end upset and swaged, as shown at *m*.

The triple-spoke wire wheel is used where wire wheels are fitted to an automobile that had previously been equipped with wooden wheels, the third row being added to take up the extra strain occasioned by setting the rim in for the purpose of keeping the wheel tread the same. On account of the construction of the rear axle used with wooden wheels, the brake drums must be kept the same distance apart when wire wheels are substituted; hence, it is necessary to set the wheel rim in farther toward the automobile body, in relation to the hub, than when the axle is built specially for wire wheels. The extra strain set up by thus constructing the wheel is taken by the row of spokes *k*.

8. Spring Wheels.—To obviate the use of pneumatic tires, the maintenance and first costs of which are high, and at the same time to secure the easy riding qualities of the pneumatic tire, many inventors have given a great deal of thought to the problem of producing commercially feasible elastic, or spring, wheels. Numberless designs have been produced, but spring wheels have not become popular.

FRONT AXLES

9. The **front axle** of an automobile is made up of four parts; namely, a bar carrying the spring seats upon which the springs supporting the front part of the automobile rest, two steering knuckles carrying the spindles on which the wheels turn, and a cross-rod extending from one steering knuckle to the other and by means of which the knuckles are tied together so as to move in unison when the wheels are swiveled in steering. The location of these four parts is shown clearly in Fig. 6, which is a front view of one model of the chassis of the Winton automobile. The main bar of the axle is shown at *a*, and at *b* and *c* are located the spring seats upon which the front springs *e* and *f* are carried. The steering knuckles *g* and *h* are pivoted at the ends of the axle bar and are connected by the cross-rod *i*, which, in this automobile, is located in front of the front axle.

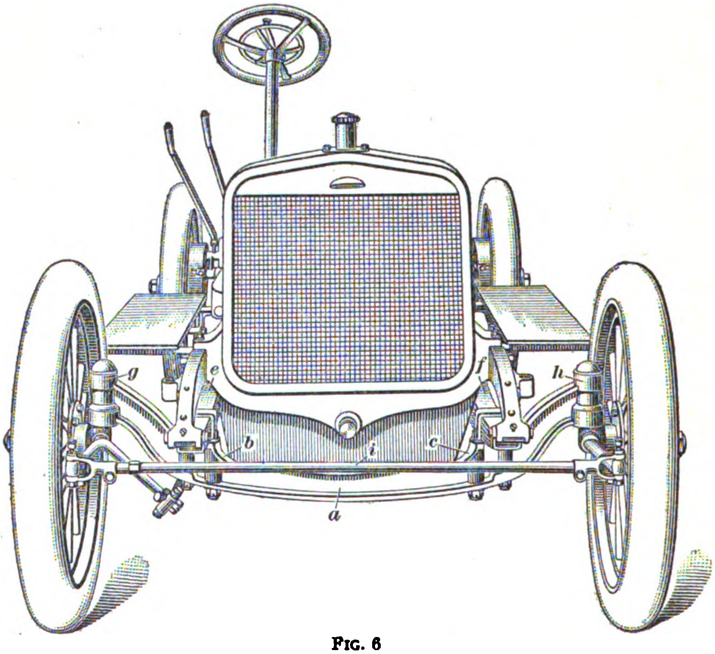

Fig. 6

More frequently, the rod *i* is located back of the axle, but in every instance it performs the same service; that is, it forms a connecting link between the steering knuckles.

On the majority of automobiles, the front axle bar is made of a forged-steel **I** beam, as shown in Fig. 6. In a few cases, however, the axle is made of a steel tube, in still other instances the bar is of channel cross-section, and on at least one of the smaller cars a wooden axle has been used. Front axles may, then, be classified broadly as *solid front axles*, of which there are a number of types, and *tubular front axles*.

10. Solid Front Axles.—Several types of solid front axles having an **I**-beam cross-section are illustrated in Fig. 7, which shows a top and a side view of each. In (*a*) is shown the front axle of the Studebaker "20" automobile. The axle bar *a* of this axle is made of a steel **I** beam, which is dropped at the center to make it more elastic. This bar carries the spring seats *b*, upon which the front springs rest, and the spring clips *d*, which hold the springs in place. The steering knuckles *e* are pivoted in the yoked ends of the axle by the pins *c*, and they carry the spindles *f* upon which the front wheels rotate. The knuckles are connected by the cross-rod *h*, which is attached to the arms *g* by means of yoked ends. The rod *h* and the steering knuckles are rocked to and fro when steering the automobile, by a rod *i* that is connected at its free end to the steering gear. The steering knuckles used on this axle are known as the *Elliott type*. In this type, the knuckles fit between jaws formed at the ends of the axle bar.

Another front axle of **I**-beam cross-section, but one that makes use of steering knuckles of the *reversed Elliott type*, is the McCue axle shown in (*b*). The different parts of this axle perform the same functions as the corresponding parts in the axle shown in (*a*), the steering knuckles in this case being rotated by an arm *a* that is connected to the steering gear by means of a rod, not shown. It will be noted that in this case the steering knuckles have jaws fitting over stub ends of the axle bar.

The Winton axle, shown in (*c*), also makes use of an **I**-beam cross-bar, but it uses the *Lemoine type* of steering knuckle.

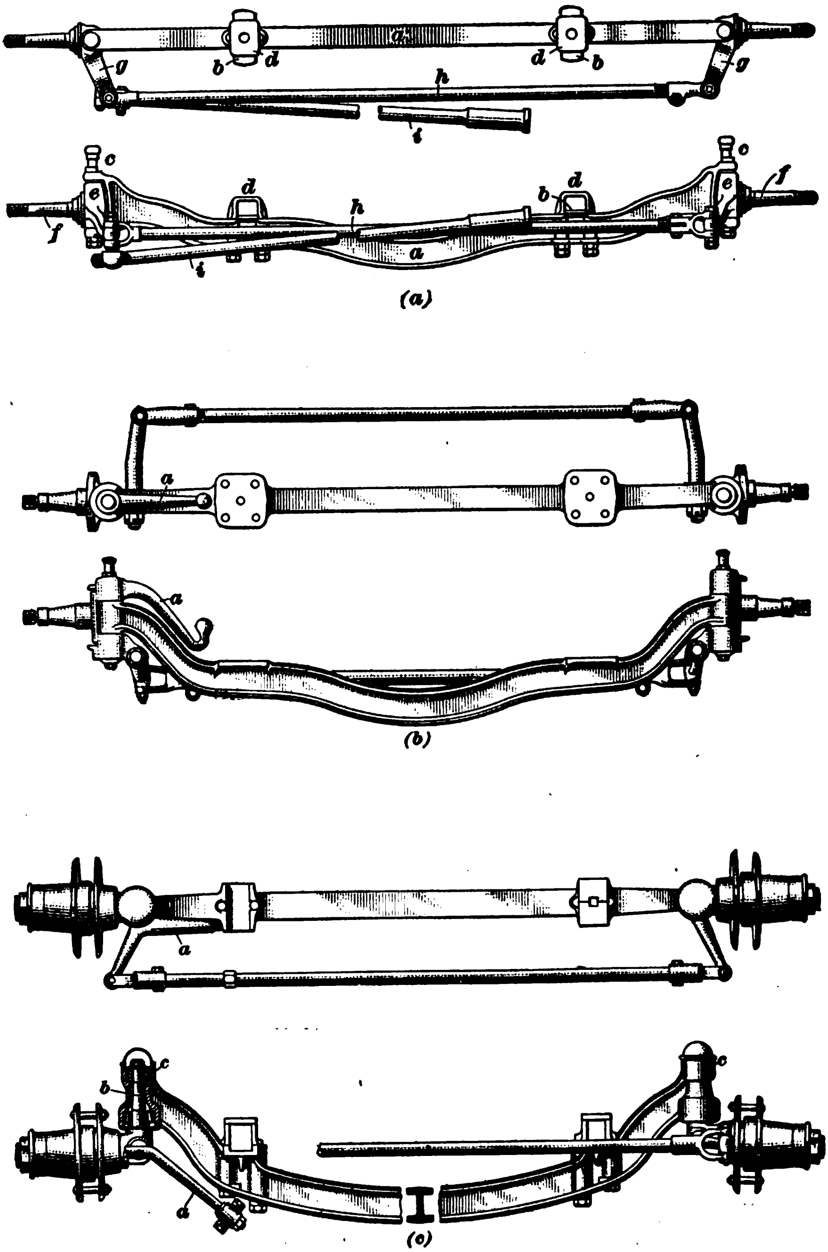

FIG. 7

In this case, the steering knuckles are rotated by means of an arm *a* that is connected to the steering gear by a rod, as previously explained in connection with the McCue axle. In the Lemoine steering knuckle, no jaws are used; the knuckle has a stub *b* that fits into a corresponding hole in a boss *c* at each end of the axle bar. The "32" Hupmobile car uses a *reversed Lemoine steering knuckle,* which means that the spindle upon which the wheel turns is at the top of the axle bar instead of below it.

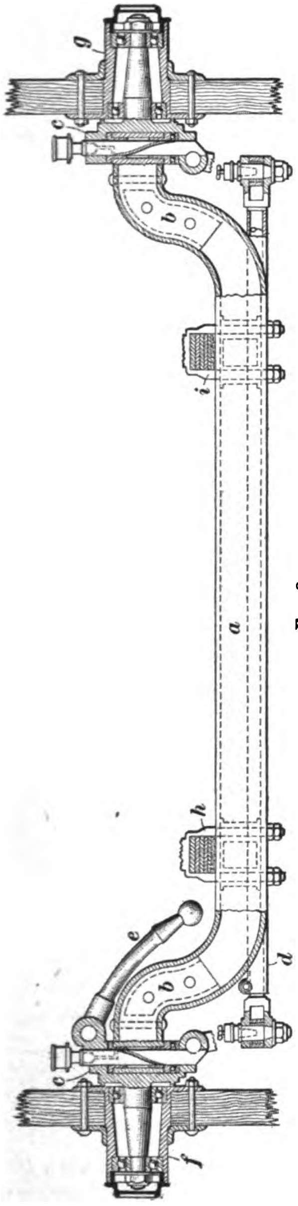

FIG. 8

11. In Fig. 8 is shown a part sectional and part front view of a pressed-steel front axle, made in the form of a channel, as used in some S. G. V. automobiles. The main part of the axle *a* is fitted with two end-pieces *b* that carry the steering knuckles *c*. The steering knuckles, which are of the reversed Elliott type, are tied together by the rod *d*, so that they receive the same movement when operated by the arm *e*. The wheel hubs are shown in place at *f* and *g*, and the spring clips that hold the springs on their seats, at *h* and *i*.

12. Tubular Front Axles. An example of a tubular front axle is the Franklin axle, two views of which are shown in Fig. 9. The main axle bar is a steel tube *a*, which is brazed to the steering

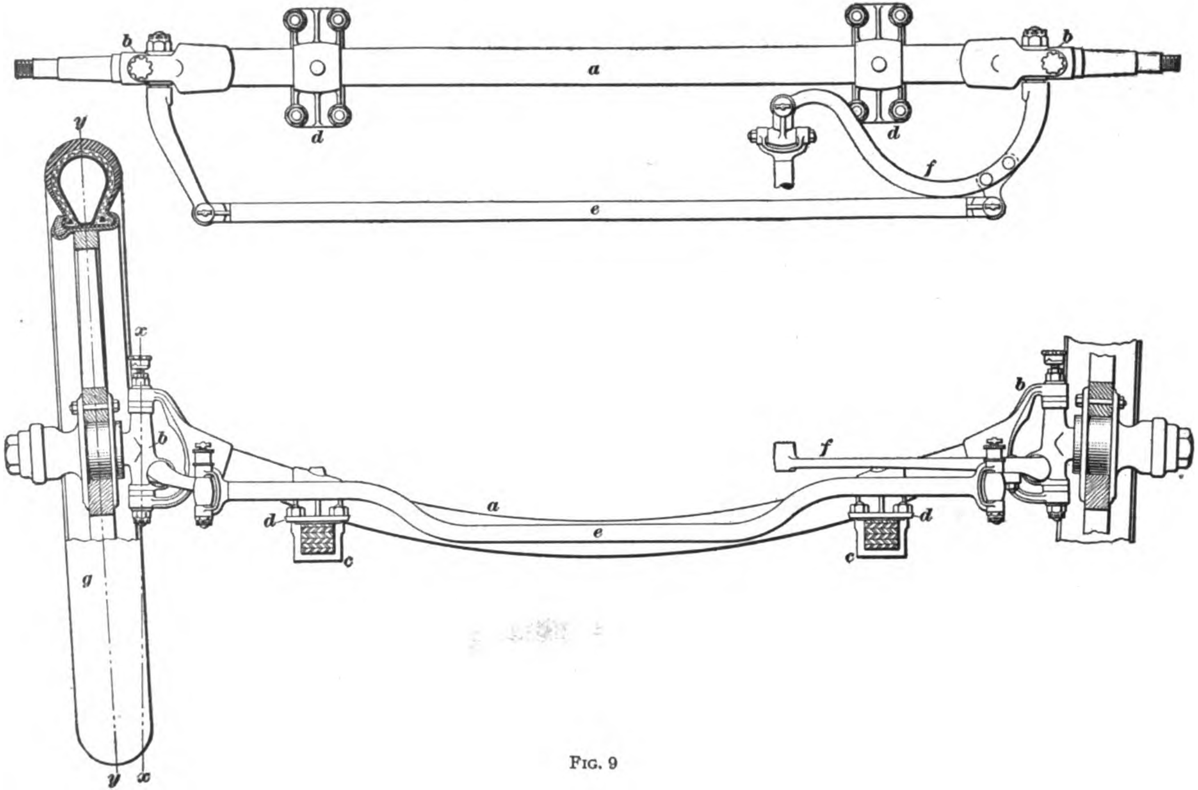

FIG. 9

knuckles *b*. The axle is dropped, or bent downwards, at the center to increase its elasticity. The springs are carried beneath the axle tube by spring clips *c* that are bolted to the supports *d*. The steering knuckles are tied together by the rod *e*, so that they move in unison, and they are operated from the steering gear by means of the arm *f*. One road wheel *g* is shown in part section in place on the axle, and it serves to illustrate the relative positions of the wheel and the steering knuckles. When springs are placed beneath the axle, they are said to be *underslung*.

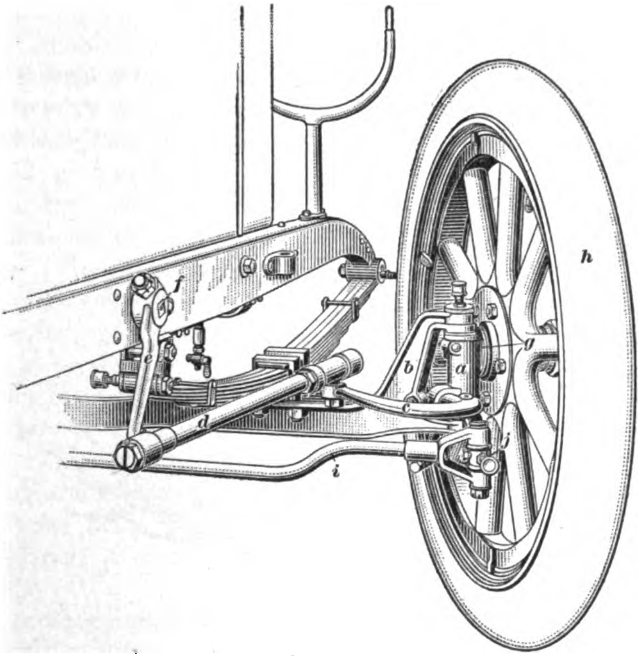

Fig. 10

13. Steering Knuckles.—In four-wheeled horse-drawn vehicles, the spindles upon which the wheels revolve form an integral part of the front axle, and steering is accomplished by turning the entire axle about its center. In automobiles, however, this construction is undesirable because of the difficulty that would be incurred in steering by hand at high speeds, as well as the lack of strength that would result. In order that the front axle bar of an automobile may be attached rigidly to the springs, and to obtain easy steering by turning the wheels through only a small radius, *steering knuckles* are provided. **Steering knuckles** are devices pivoted at the ends of the front axle of an automobile for the purpose of supporting the front wheels and allowing them to be turned without moving the axle bar.

14. A common form of the **Elliott steering knuckle** is shown in place on the axle in Fig. 10, which is a view of the right-hand front wheel and steering connections on the Abbott-Detroit automobile, looking from the rear of the car toward the front. The steering knuckle *a* is pivoted in the yoke *b* of the axle bar, and it is operated from the hand steering wheel through the arm *c*, the reach rod *d*, and the steering-gear crank-arm *c* clamped to the steering gear-shaft *f*. The spindle *g* upon which the road wheel *h* revolves is an integral part of the knuckle. This steering knuckle is connected to the knuckle on the left side of the car by means of the distance rod *i*, which is attached to the arm *j*. When the steering wheel is turned,

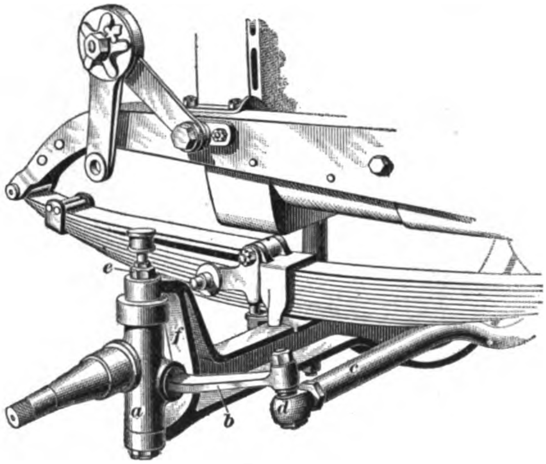

FIG. 11

the reach rod *d* is moved forwards or backwards by the arm *e*, so that the knuckle, and, consequently, the road wheel, is turned to the right or the left by the arm *c*. The other front wheel is turned at the same time and in the same direction by means of the distance rod *i*. The steering knuckle on the left side of the automobile is exactly the same as that shown in Fig. 10, except that the arm *c* is omitted.

15. In Fig. 11 is shown the left-hand steering knuckle used on the Chadwick car. In this automobile, the steering gear is located on the right-hand side, so that no reach rod arm is necessary on this knuckle. The steering knuckle *a* has a separable arm *b* connected to the distance rod *c* by means of a ball-and-socket joint at *d*. The steering-knuckle pivot pin *e* passes through the yoke *f* and is prevented from coming out by a nut and a cotter pin on the lower end. This knuckle is also of the Elliott type, the yoke being an integral part of the axle bar.

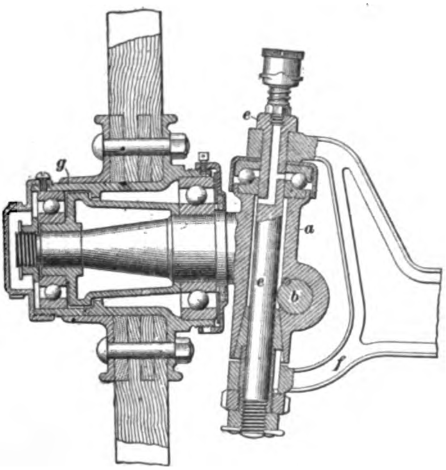

FIG. 12

A cross-sectional view of the Chadwick steering knuckle is illustrated in Fig. 12, which is lettered the same as Fig. 11, wherever possible, so that the preceding explanation may be applied to both illustrations. In Fig. 12, the wheel hub *g* is shown in place on the spindle and the distance rod is omitted in order to show the other parts more clearly.

16. Fig. 13 shows a cross-sectional view of the steering knuckle used on the Stearns automobile. It, too, is of the Elliott type, and differs principally from the Chadwick knuckle in that the pivot pin bearings, or bushings, *h* and *i* are mounted in the yoke ends instead of in the knuckle head, as shown in Fig. 12, and a plain thrust bearing *j*, instead of a ball thrust bearing is used to support the load. In the Stearns steering knuckle, the wheel hub is mounted on roller bearings *k*, while in the Chadwick it is mounted on ball bearings.

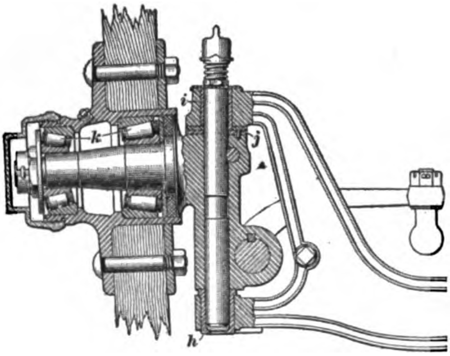

FIG. 13

17. An example of the **reversed Elliott steering knuckle** is that used on the Pierce-Arrow automobile. A perspective view of this knuckle is shown in Fig. 14, and a cross-sectional view, in Fig. 15. On referring to these illustrations, which are lettered alike, it will be seen that the spindle *a* and the yoke *b* form a one-piece steel forging, and that this forging carries the wheel hub *c* on the bearings *d* and *e*. The enlarged portion *g* of the axle bar *f* is pivoted in the yoke by the pin *h*. It is to be noted that the steering-knuckle bearings, or bushings, *i* and *j* are mounted in the yoke and that the yoke

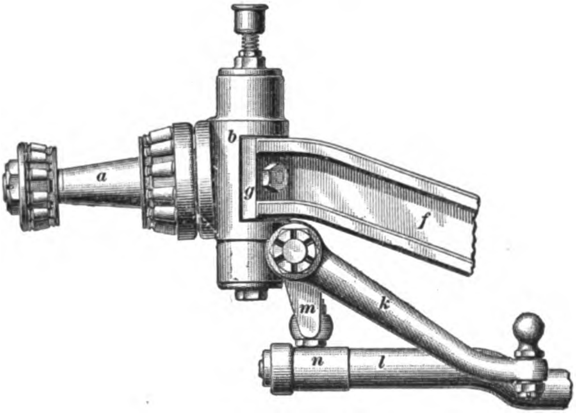

FIG. 14

turns on the pin *h*, which remains stationary with respect to the axle bar. This form of construction is the rule in the reversed Elliott type of steering knuckle, although in the Elliott type,

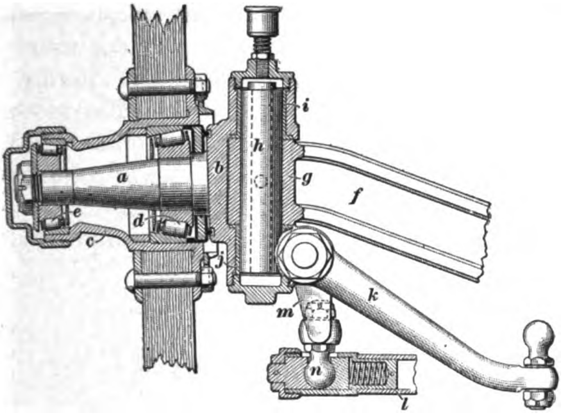

Fig. 15

as just explained, the bearing may be in the knuckle, or head, as shown in Fig. 12, or it may be in the yoke, as in Fig. 13. Figs. 14 and 15 show the right-hand steering knuckle viewed from the front of the automobile. The knuckle is operated from the reach rod by means of the removable arm *k* and is tied to the left-hand knuckle by means of the distance rod *l*, which is joined to the arm *m* by the ball-and-socket joint *n*.

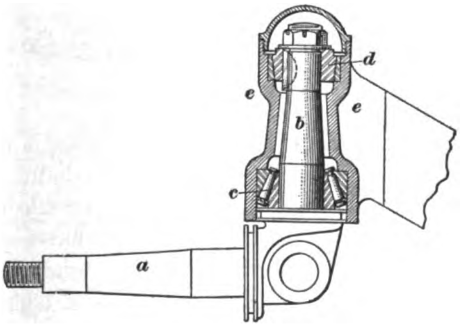

Fig. 16

18. A Lemoine steering knuckle, as used on the Winton automobile, is shown partly in section in Fig. 16; an outside view of this type of knuckle, on the front axle, is shown in Fig. 7 (*c*). As will be seen on referring to Fig. 16, no yoke is employed in this knuckle, but the spindle *a* and the pivot pin *b* are integral, and the pin rotates in bearings *c* and *d* in the axle head *e*.

19. **Steering Connections.**—Fig. 17 illustrates the complete steering system of the Pierce-Arrow automobile. This system is presented to show the way in which many steering systems are arranged and how turning the steering wheel *a* to the right or the left causes a corresponding movement of the front wheels. When the wheel *a* is rotated, a worm at the lower end of the steering column *b* causes the segment of a worm-wheel with which it meshes to turn on its axle, thereby causing the arm *c* to move backwards or forwards, as the case may be. The motion of the reach rod *d* is transmitted to the steering arm *e* of the right-hand steering knuckle *f*, and from the latter, through the knuckle arm *g* and the distance rod *h*, to the arm *i* of the left-hand steering knuckle *j*. The two steering knuckles are thus made to move in unison to the right or the left in response to a corresponding movement of the steering wheel. When the wheel is turned to the right, the reach rod *d* moves forwards, causing the front wheels to be swung around so that the car travels toward the right. Rotating the wheel in the opposite direction causes the reach rod *d* to be drawn back, so as to turn the front wheels toward the left.

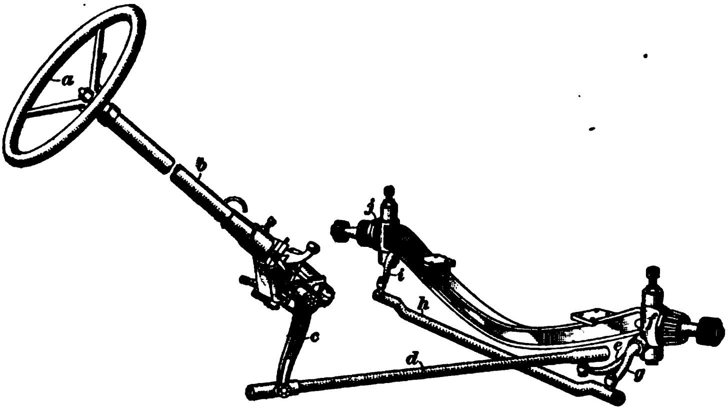

Fig. 17

It is to be noted that on this automobile the steering wheel *a* is located on the right-hand side, so that the reach rod *d* and the arm *e* are also on the right-hand side. However, many

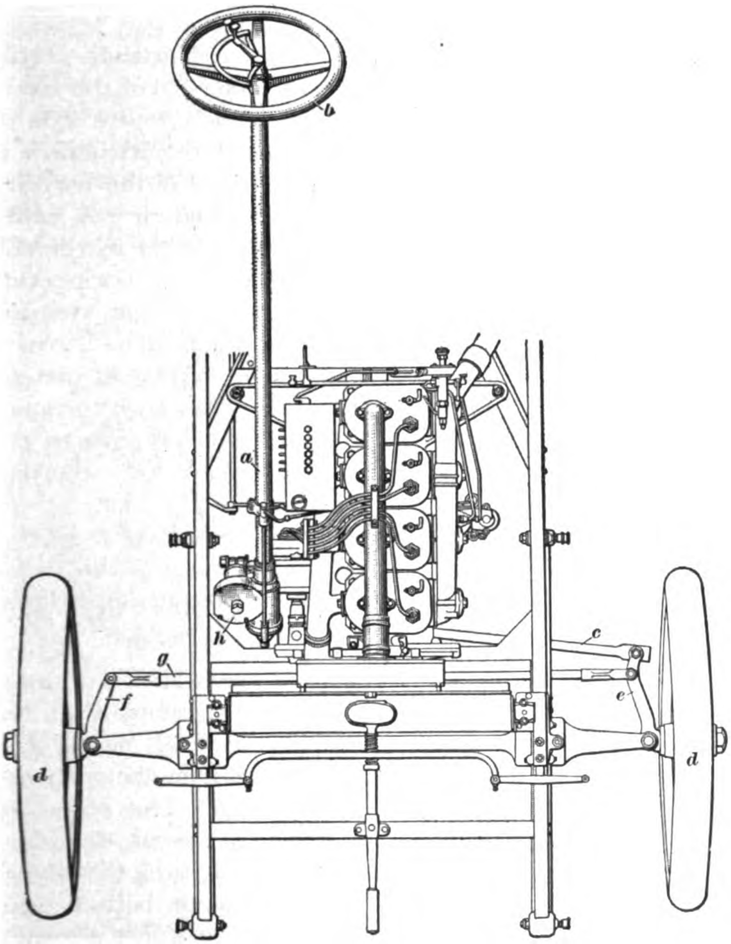

FIG. 18

manufacturers now place the steering column on the left-hand side of the automobile, in which case the distance rod and the steering arm are also placed on that side. Generally, the distance rod that connects the steering-knuckle arms is located behind the front axle, as is indicated in Fig. 17, the object being to protect it from damage that might result from obstructions in the road; nevertheless, it is sometimes placed in front of the axle, as is shown in Fig. 6.

20. On some automobiles, the reach rod extends across the chassis, in which case it connects the lower end of the steering column with the steering knuckle on the opposite side of the automobile. An example of this kind of construction is illustrated in Fig. 18, which shows a top view of the forward part of the chassis of one model of the Overland car. A worm and a worm-wheel are located in the casing *h* at the lower end of the steering column *a*, just as is explained in connection with Fig. 17; but they are so arranged that when the steering wheel *b* is turned to the right or the left the reach-rod arm is rotated backwards or forwards crosswise of the chassis instead of lengthwise. A movement of this arm causes a corresponding movement of the reach rod *c*, and this, in turn, causes the desired rotation of the road wheels *d* through the steering-knuckle arms *e* and *f* and the distance rod *g*.

When the steering wheel is located on the left-hand side of the automobile and a reach rod running cross wise of the frame is employed, the reach rod extends to the steering knuckle on the right-hand side.

21. Mounting Front Wheels.—In order that an automobile may be steered easily by hand, it is desirable that the front wheels turn as nearly as possible on an exact pivot; that is, that the pivot pin be as nearly as possible in line with the point where the wheel touches the ground. This object is accomplished in some cases by having the steering knuckles constructed so that, while the pivot pins are vertical, the wheels are inclined slightly and are closer together at the bottom than at the top. In other words, a line *x x*, Fig. 9, drawn through the center of one of the pivot pins will be nearer the center line *y y* of the wheel at the point where it touches the ground than at the hub. By thus bringing the bottom of the wheel as near as possible to the center line of the pivot pin, the ease with which the wheels may be turned in steering is increased.

The same object may be accomplished by keeping the wheel vertical and inclining the steering-knuckle pin, or by inclining both the wheel and the pivot pin. The method last named is illustrated in Fig. 12, which shows a steering knuckle so designed that both the wheel and the pin are set at an angle.

22. Ease of steering is accomplished in some automobiles by making the hub of the front wheel hollow and placing the steering knuckle in its center. In this way, the center of the steering-knuckle pivot pin is brought into exact line with the center plane of the wheel, and maximum ease of steering is produced because the wheel is turned on an exact pivot. An example of this form of steering knuckle and front axle is presented in Fig. 19, which shows a front view of the six-cylinder Marmon car. The axle yoke *a* extends into the hub *b*, so that the center line of the steering knuckle *c* coincides with the center plane of the wheel.

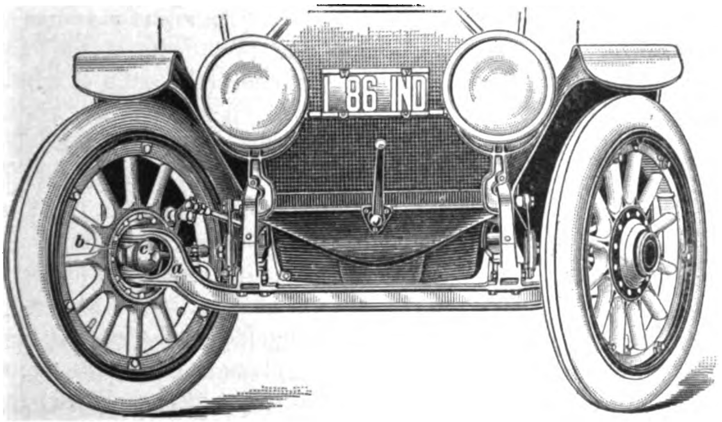

FIG. 19

23. **Caster Steering.**—By means of certain particular settings of the steering-knuckle pivot pins, it is possible to make the front wheels of an automobile keep automatically in line with the rear wheels while the car is in motion, thus tending to make it go straight ahead. The principle involved is either identical with that used in casters placed under furniture or a modification of it; for this reason, front axles constructed on the same principle are known as **caster steering axles.** This effect is accomplished in three ways, as is illustrated in Fig. 20.

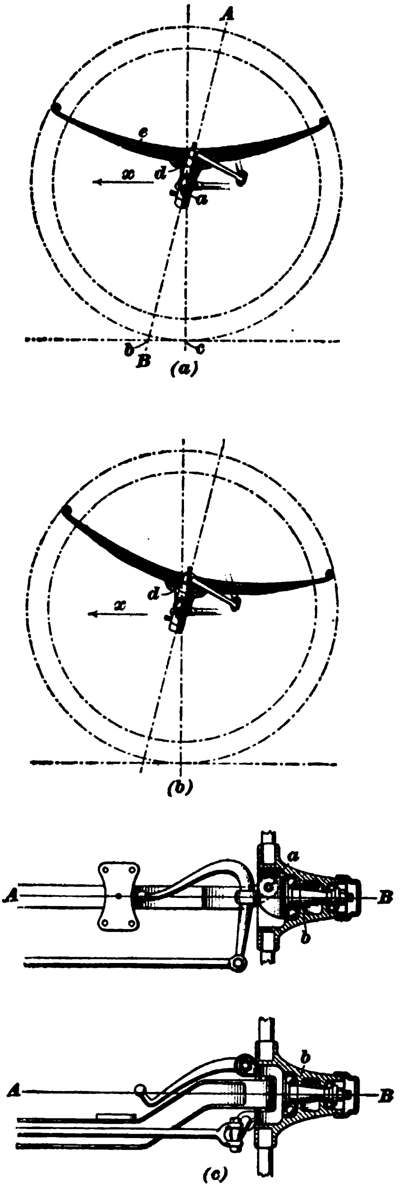

FIG. 20

In the first method, which is shown in view (*a*), the steering knuckle *a* is slanted so that the line *A B*, which passes through the center of the pivot pin, meets the ground at a point *b*, which is a short distance ahead of the point *c* where the tire touches the ground. It is assumed that the front of the automobile points in the direction of the arrow *x*. Slanting the steering knuckles in the manner first explained gives the same steering effect as slanting the front fork of a bicycle; that is, the weight of the automobile tends to keep the front wheels in line with the rear wheels and to make the car go straight ahead. It is to be noted that in this case the spring seat *d* is not set square with the axle but is tilted slightly to allow the spring *e* to be mounted horizontally.

The second method of obtaining the caster effect is shown in view (*b*). This method is exactly like that illustrated in view (*a*), except that the spring seat *d* is set square with the pivot pin, so that both the spring and the pivot pin are tilted in order to slant the steering knuckle.

In the third method of obtaining the caster steering effect, use is made of the identical principle of the ordinary caster that is used on furniture. The application of this principle to a steering knuckle, as carried out in the B. and L. caster front axle, is shown in (*c*), which presents a top view and a rear view. The pivot pin *a* is set in front of the center line *A B* of the axle and inside of the wheel hub *b*, which is made hollow. By this arrangement, the center line of the pivot pin lies in the center of the wheel, but when extended it meets the ground at a point some distance ahead of the point where the tire touches the ground. The wheel, then, has the effect of trailing behind the pivot pin, just as the ordinary caster trails behind its pivot, or bearing, and tends to keep the automobile moving in a straight line.

REAR AXLES AND HOUSINGS

24. Types of Rear Axles.—Rear axles are of two general types, namely, *live rear axles* and *dead rear axles*, depending on their construction.

A **live rear axle** is one that rotates or has a rotating part. It not only carries a part of the weight of the car and the occupants, but also serves to drive the rear wheels and thus propel the vehicle.

A **dead rear axle** has no rotating parts; the wheels are driven by chains from a countershaft and they turn on spindles on the ends of the axle. A dead rear axle serves only to carry its proportionate part of the weight of the car and its load, and takes no part in driving the wheels.

25. In the majority of American-made automobiles use is made at present of the live rear axle; the dead axle is employed in only a limited number. The live axle is made up of three principal parts, namely, a *two-piece driving axle shaft*, a *differential*, and a *housing* that encloses the axle shaft and the differential. That part of the housing which surrounds the axle shaft is sometimes called the *axle tube*, and to it are pinned and brazed or otherwise fastened the spring seats, or blocks, to which the rear springs are fastened by means of *spring clips*. Each half of the axle shaft is attached at its inner end to the differential, which is located in the middle of the axle, and at its outer end to one of the road wheels, which it drives. The axle shaft is driven through the differential, which consists of a set of gears so arranged that while both parts of the shaft receive power, one part may turn at a higher rate of speed than the other and thus allow the automobile to go around a corner without causing one of the wheels to slide. Usually, the differential is driven from the engine by means of a shaft and bevel gears, or by means of a shaft driving a worm that meshes with a worm-wheel, although in a few cases it has been driven by a chain and sprockets.

Live rear axles are divided into a number of types, or classes, depending on the arrangement of the axle bearings and on the method of connecting the road wheels to the axle shaft. These classes are *plain live rear axles*, *semifloating rear axles*, *three-quarter-floating rear axles*, and *full-floating rear axles*.

26. Plain Live Rear Axles.—The first rear axle in general use was of the plain live-axle type and was driven by a chain and sprocket wheels. In this type, each part of the two-piece axle shaft is supported directly by two bearings, which are mounted between the axle shaft and the axle tube. Besides driving the rear wheels, the rotating axle shaft must carry the weight that comes on the rear axle. Chain-driven axles of this type are obsolete, practically all the plain live rear axles now employed being driven by a propeller shaft.

27. An example of a shaft-driven plain live rear axle is presented in Fig. 21, which illustrates the axle used on the Ford, model T, automobile, (*a*) being an external view and (*b*) a cross-sectional view; the two views are lettered the same, as far as possible, but are drawn to different scales. The cross-sectional view (*b*) shows part of the axle housing *a* cut away, exposing to view the axle shaft *b*, *b'* and the differential *c*.

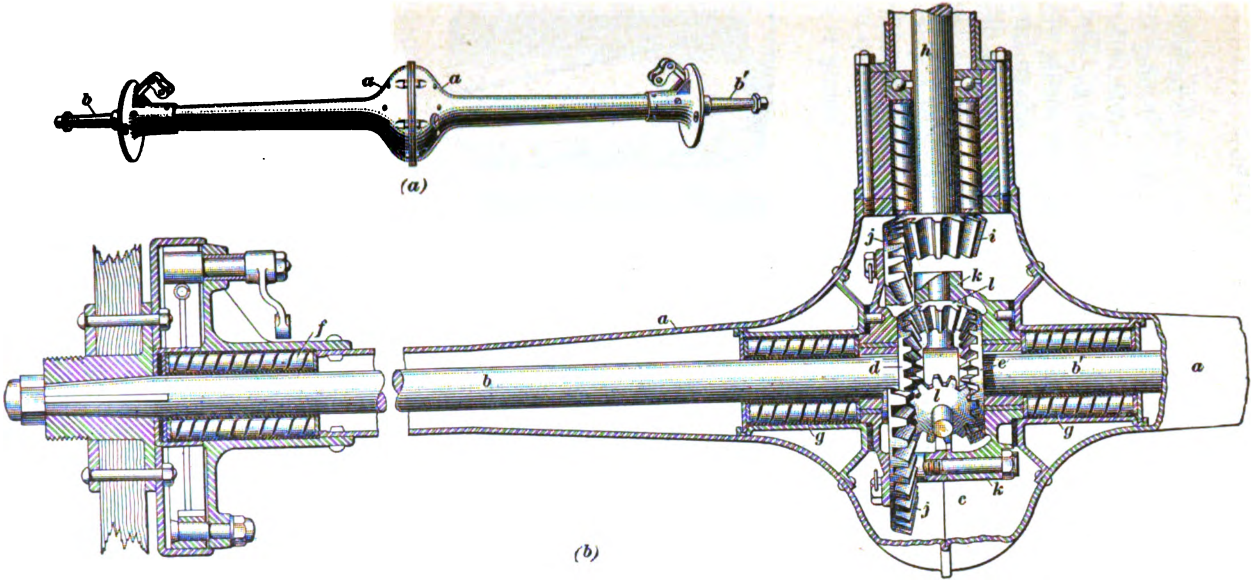

(a)

(b)

FIG. 21

The axle shaft consists of the two halves *b* and *b'*, which are brought together at the differential, the gear *d* being keyed to the end of *b* and the gear *e* to the end of *b'*. Each part of the shaft is supported by two roller bearings *f* and *g*. The road wheels are keyed to the outer ends of the axle shaft, which is tapered at these ends, as shown. The axle is driven from the engine through the propeller shaft *h*, which drives the differential, and, consequently, the axle shaft and road wheels, through the bevel pinion *i* and the large bevel driving gear *j*.

The form of roller bearing shown at *f* and *g* is shown in detail in Fig. 22. The bearing consists of rollers *d* made up of bars wound in much the same way that a helical spring is made.

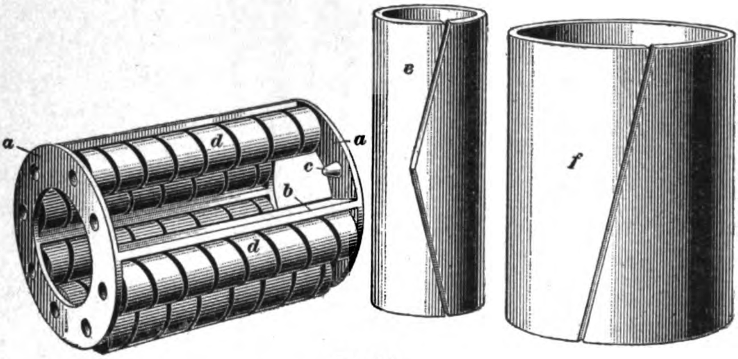

FIG. 22

These rollers are held in a cage formed of two rings *a*, which are held together by the connecting pieces *b* and contain projections *c* for retaining the rollers. The casing *e* is placed inside of the rollers and the casing *f* outside.

28. In Fig. 23 is shown in perspective the Ford differential gear, which allows one rear wheel to turn at a higher rate of speed than the other. In this illustration, part of the housing *a* is cut away so as to show the gears, and the different parts are lettered the same as in Fig. 21. On referring to Fig. 23, it will be seen that the differential consists, in part, of the inner housing, or casing, *k*, to which is fastened the bevel driving gear *j*. Three small bevel pinions *l*, which are fitted to the inner housing *k* and are free to turn on their own axes, mesh with the gears *d* and *e*, which are keyed to the halves of the axle shaft. When the automobile is being propelled by the engine, the pinion *i* on the propeller shaft turns the inner housing *k* by means of the bevel driving gear *j*. The housing *k* carries the small pinions *l* bodily around with it, and these pinions, in turn, rotate the gears *d* and *e* and thus cause the axle shaft and the rear wheels to turn. When the automobile is traveling straight ahead, the gears *d* and *e* rotate at the same speed because the road wheels rotate at the same speed; hence, the pinions *l* do not turn on their own axes, but remain stationary with respect to the housing *k*, simply forming a connection between the housing and the gears *d* and *e*. However, when the automobile turns a corner, or goes around a curve, the rotation of one rear wheel is resisted more than that of the other, or, in other words, the inner rear wheel is held back and does not travel so fast as the outer one, so that the gears *d* and *e* must be allowed to turn at different speeds in order that one of the road wheels will not skid. When this condition exists, the pinions *l*, besides being carried around bodily by the housing *k*, turn on their own axes, and thus permit one of the gears *d* and *e* to rotate more slowly than the other and allow the road wheels to travel at different rates of speed and at the same time receive power from the engine.

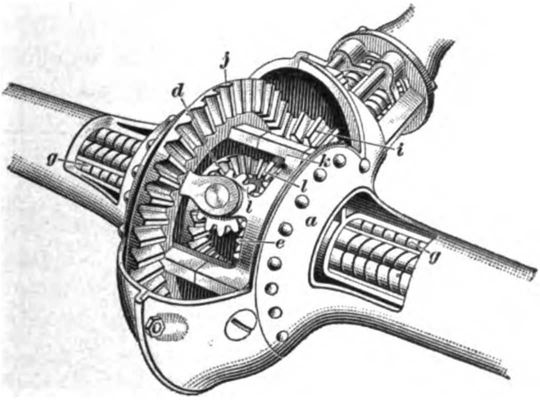

FIG. 23

The meshing of the bevel driving pinion *i*, Fig. 23, with the driving bevel gear *j* tends to thrust the whole differential-gear assembly sidewise; this tendency is resisted, however, by a special thrust bearing, which must be provided in all rear axles employing the bevel-gear drive.

The differential just explained is known as a *bevel-gear differential*, because the gears inside of the inner housing are bevel gears. On some automobiles a *spur-gear differential* is used. This kind of differential is constructed on the same principle as the bevel-gear differential, except that spur gears instead of bevel gears are employed inside the housing.

29. **Semifloating Rear Axles.**—The semifloating rear axle differs from the plain live rear axle in that the inner ends of the axle shaft are supported, that is, have a bearing, in the differential housing instead of in the axle housing. The axle shaft, at its outer ends, just as in the plain live axle, rotates directly in bearings fitted to the axle tube. The inner housing of the differential rotates on bearings that are mounted between hubs on each side of the differential housing and the outer or stationary axle housing. The axle shaft passes freely through the hubs of the housing, so that it is relieved of the weight of the differential, and its inner ends are subject chiefly to the driving stress, the axle tube taking part of the weight of the

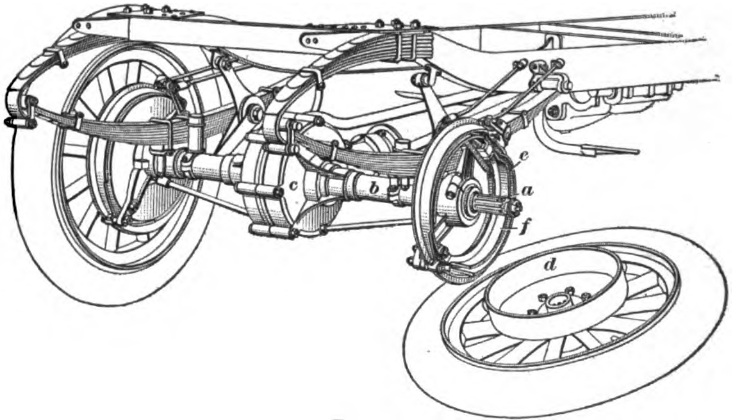

Fig. 24

automobile. In this type of axle, the wheels are keyed or other wise fastened to the outer ends of the axle shaft, just as in the plain live rear axle.

Owing to the fact that the inner ends of the axle shaft do not support the differential assembly, and hence are not subject to as severe bending stresses as those of the plain axle, these ends of the axle are said to *float*, whence the name *semifloating axle* is derived.

30. An example of a semifloating rear axle is that used on the Pierce-Arrow automobile. This axle is illustrated in Figs. 24 and 25. Fig. 24, which is a perspective view, shows the rear-axle construction and part of the automobile frame, and Fig. 25, which is a cross-sectional view of the same axle, shows the axle housing and differential cut in half, thus exposing to view the axle shaft *a*. The same parts in both illustrations are lettered alike as far as possible. In Fig. 24, the end of the axle shaft upon which the road wheel is fitted is shown at *a*; the axle tube *b* surrounds the shaft and carries the rear springs, which are of the three-quarter-elliptic type. The outer differential housing is shown at *c*. The brake drum *d* is bolted to the wheel and, when assembled, it is located between the brake bands *e* and *f*, which may be applied and released by the driver either by means of a hand lever or by a pedal.

31. On referring to Fig. 25, which shows the inside construction of the axle, it will be seen that the axle shaft *a* is supported at its outer ends by the bearings *g* mounted inside of the axle tube *b*, and at the differential by the hubs of the gears *h* and *h'*, into which its inner ends extend and are keyed. The inner differential housing *i* is carried by the bearings *j*, which are mounted in the outer housing *c*. The thrust bearing *k* is supported against a shoulder in the housing *c* and prevents endwise motion of the housing *i*.

The different forms of bearings used in this axle are illustrated in Fig. 26. At (*a*) is shown the bearing used for supporting the outer ends of the axle shaft; this bearing is marked with the letter *g* in Fig. 25. It is known as a *conical-roller bearing*, and by means of the rollers, which are held between

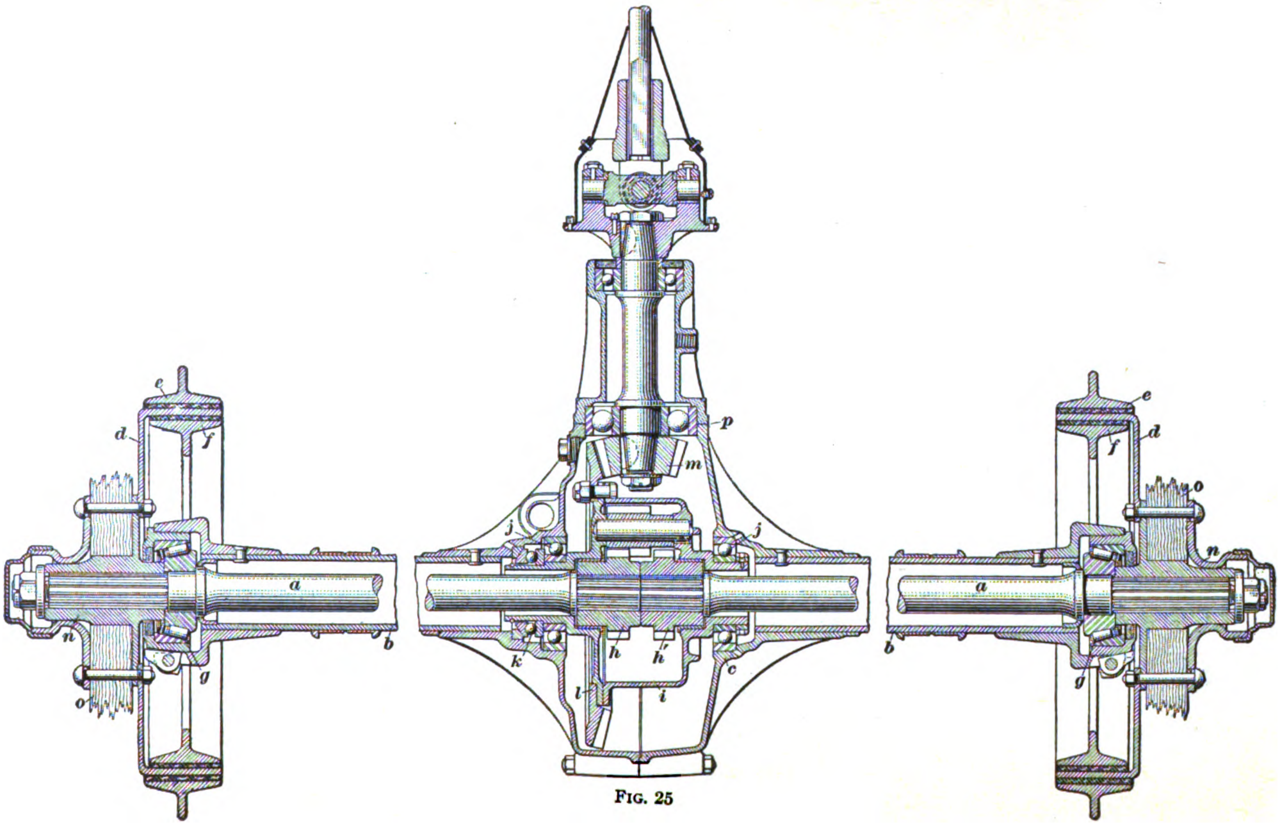

FIG. 25

tapered casings, it prevents the shaft from moving endwise. The outer casing is not shown in this view, in order to more clearly show the rollers. At (*b*) is shown an *annular ball bearing* of the type used to support the inner differential housing, as shown at *j*, Fig. 25. This bearing consists of two rings *a* and *b*, between which hardened-steel balls *c* rotate. The balls are separated by means of cages *d*. A *ball-thrust bearing* like that used at *k*, Fig. 25, is shown in Fig. 26 (*c*).

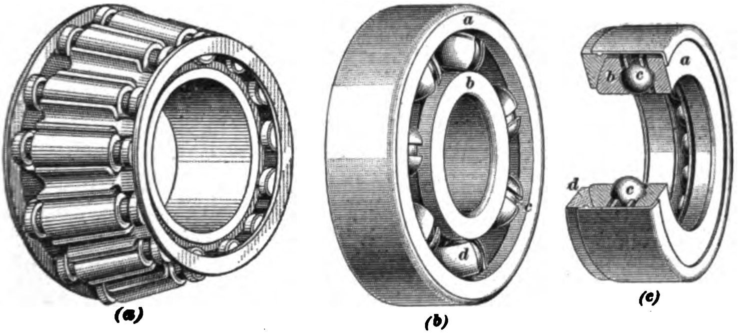

Fig. 26

It is made up of grooved races *a* and *b*, between which the balls *c* rotate. This bearing is mounted in the axle by placing the ring *a* against the inner differential housing and the ring *d* against the stationary housing, in which position it prevents endwise motion of the differential.

The differential-gear assembly *i*, Fig. 25, is driven by means of the large bevel gear *l* and the bevel driving pinion *m*. This differential is of the spur-gear type, being composed of spur gears so arranged as to allow one of the road wheels to turn at a higher rate of speed than the other, as, for instance, in going around a curve, with both wheels receiving power from the propeller shaft and engine. At *n* are shown the wheel hubs together with a part of the spokes *o*.

In all bevel-gear-drive rear axles, a thrust in a forward direction is exerted on the shaft that carries the bevel driving pinion. In the rear axle shown in Fig. 25 this thrust is taken care of by the annular ball bearing *p*; in other rear axles, it is taken care of by the use of conical roller bearings; and in still others, a separate thrust bearing is fitted to the bevel-pinion driving shaft.

32. **Three-Quarter-Floating Rear Axles.**—In what is known as the three-quarter-floating rear axles, the bearings at the outer ends are so mounted outside of the axle tube that the wheels turn on them and the weight of the automobile and occupants is carried by the axle tube, or housing. The axle shaft is rigidly attached to the wheels and helps to keep them in the correct position; but outside of this, broadly speaking, the only stress that comes on it is the driving stress. In this axle, the driving shaft does not come directly in contact with any bearing, but is supported at the inner ends by the differential and at the wheel ends by the wheels, which run on the axle tube. The construction at the differential is exactly like that of the semifloating axle.

33. A three-quarter-floating rear axle, such as is used on the Overland car, is illustrated partly in section and partly in full view, in Fig. 27. The left half of this illustration shows that part of the axle assembly cut in half, exposing to view the axle shaft and bearings, while the right half shows a top external view of the other part of the axle. At *a* is shown one-half of the axle shaft, which extends into the differential *b* at the inner end, and to which the rear-wheel hub *c* is keyed at the outer end. The differential is supported by roller bearings of the coiled roller type, one of which is shown at *d*, and the wheels run on the same type of bearings, which are mounted outside of the axle tube, as at *e*. The entire weight of the load is carried by the axle tube *f*, the shaft *a* taking the driving stress and helping to keep the wheels in a vertical position. The differential is prevented from being forced endwise by a ball-thrust bearing on each side. One of these bearings is shown at *g*, where it fits between the outer differential housing *h* and the thrust collar *i*. The axle is strengthened by means of a truss rod *j*, which may be adjusted by the turnbuckle *k*. The bolts *l* are used for fastening the transmission

casing, which is not shown, to the outer differential housing, and the levers *m* and *n* are used for applying the brakes through the rods *o* and the tubes *p*. The grease retainer *q* is in the form of a ring; it prevents the oil and grease from escaping from the differential, being held in place by the spring *r*.

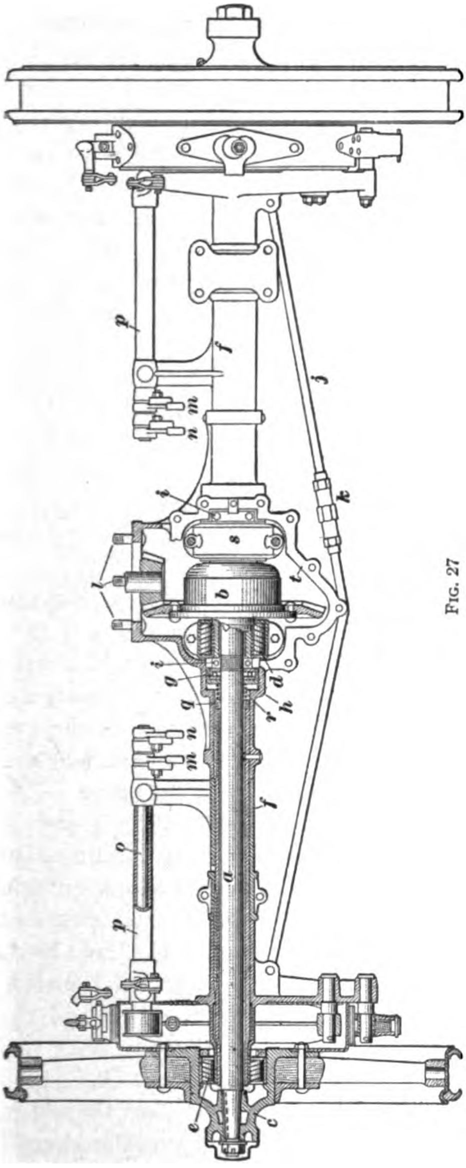

FIG. 27

34. In the Overland axle, the shaft *a* may be removed by loosening the screws of the collar *i* and withdrawing the shaft through the collar. The differential may be removed by withdrawing the halves of the axle shaft and then removing the bearing caps *s*, after which it may be lifted out bodily. Of course, before removing the differential, the outside cover-plate, which is not shown in the illustration but which fits on the bearing surface *t*, must be taken off.

35. Full-Floating Rear Axles.—The only difference between a full-floating rear axle and a three-quarter-floating axle is that in the former the rear wheels are not rigidly attached to the axle shaft as in the latter, but are driven from it by means of a positive, or dog, clutch, or its equivalent. Two bearings are required at the outer end to support the wheel in an erect position. In this type of axle, the entire load is carried by the axle tube, or housing, while the axle shaft simply transmits the turning power from the differential to the wheels. The construction at the differential is exactly the same as in the three-quarter-floating axle or in the semifloating axle.

36. A typical full-floating rear axle, such as is used on the Stoddard-Dayton car, is shown in Fig. 28. The left half of the axle and the differential are shown in horizontal section; that is, they are considered as being cut in half horizontally, exposing to view the inside construction. The right half of the illustration is, in part, an external view of that part of the axle, looked at from the top.

On referring to the sectional view, it will be seen that the axle shaft *a* extends from the differential gear *b*, in which it fits, through the axle tube *c*, without coming in contact with any bearings, to the dog *d*, by means of which it is connected to the wheel hub *e*. The dog *d* has cut around its circumference square teeth that mesh with square teeth cut into the face of the wheel hub, thus insuring a positive drive. The differential is carried on the conical roller bearings *f* and *g*, which prevent it from moving endwise, and each wheel runs on two annular ball bearings, as *h* and *i*, which are mounted outside of the axle tube and support the wheel in an erect position. The differential is of the bevel-gear type and is driven from the propeller shaft by the pinion *j* and a large bevel gear *k*. The brakes *l* and *m* are operated through the rod *n* and the tube *o*.

As shown in the right half of the illustration, the spring seats *p* are carried by the axle tube *c*, which takes the entire load brought to bear on the rear axle. The propeller shaft *q* is encased by a torsion tube *r*, which helps to overcome the

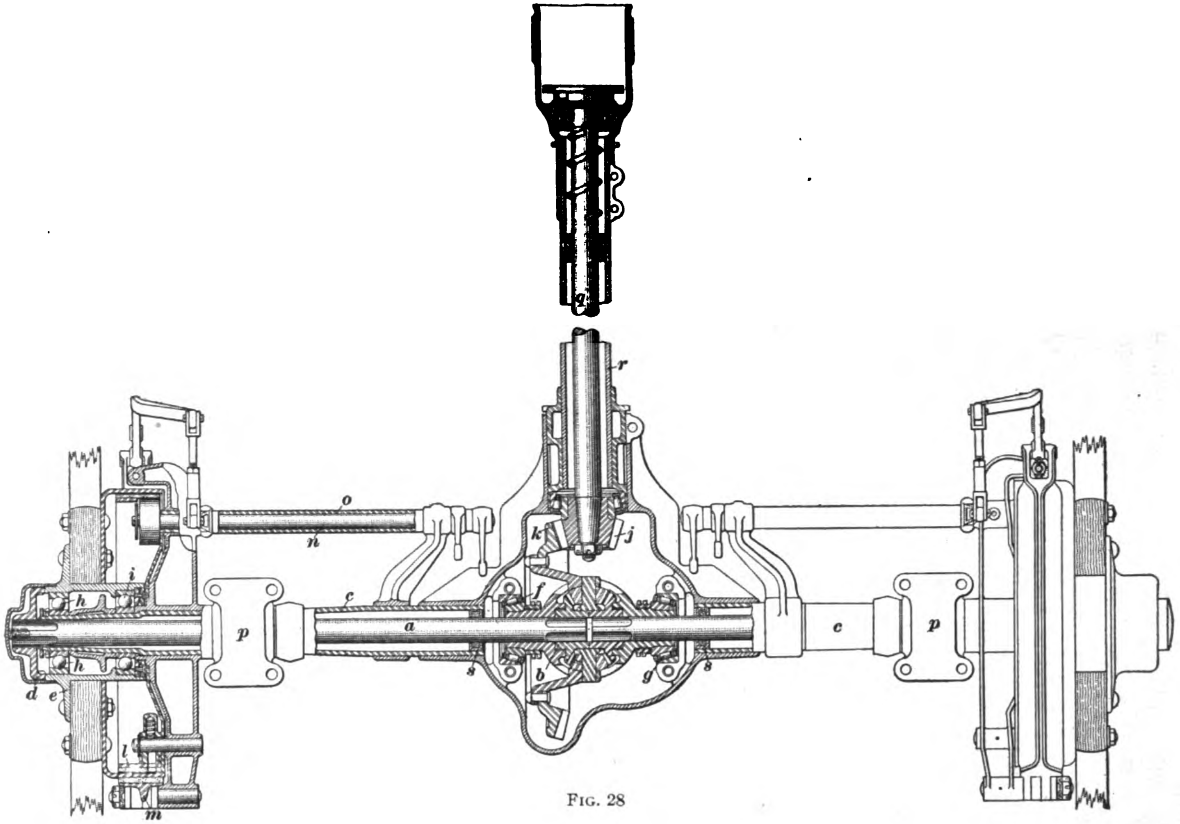

FIG. 28

tendency of the axle tube to turn. Oil and grease are prevented from escaping from the differential by the grease rings *s*.

37. Fig. 29 illustrates a Timken-Detroit full-floating rear axle, (*a*) being a top view of the axle and (*b*) a front view. In (*b*) the axle is shown with the differential and driving-gear assembly and the cover-plate removed, thus indicating how it can be taken apart. In the two views, the same parts are lettered alike as far as possible. The wheel hub *a* is shown in place on the right end of the axle, but the left end is shown with the hub removed, exposing one of the pair of conical roller bearings *b* upon which the wheel rotates. The wheel runs on two bearings, both of which are mounted on the small part of the axle tube *c*, the inner one being concealed by the brake band *d*; it is driven by the end *e*, which has six projecting

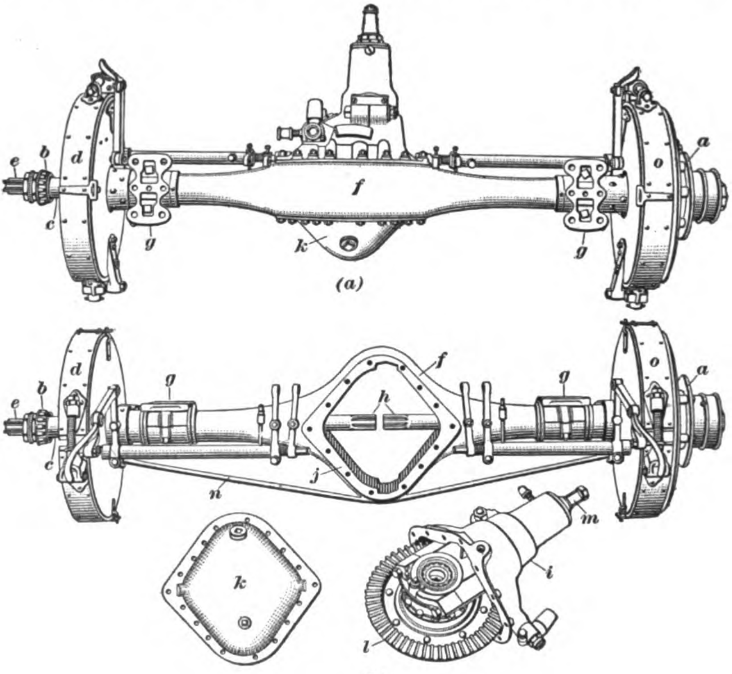

Fig. 29

splines, or keys, that form an integral part of the axle shaft, and that engage slots in the wheel hub. The main axle housing *f* is made of pressed steel and contains two inner reinforcing sleeves, or tubes, one on each side; each of these helps to carry the wheel bearings at its outer end. These inner sleeves extend in beyond the spring seats *g*, upon which the weight of the car rests. The inner ends of the axle shaft are shown at *h*, view (*b*). When assembled, the differential housing *i* is bolted to the axle housing at *j*, so that the differential gears fit inside of the axle housing and the ends of the axle shafts extend into them from each side. The cover-plate *k* is bolted on the rear of the axle, as shown in (*a*). The differential gears are operated through the large bevel driving gear *l*, which is driven from the pinion shaft *m* by means of a pinion enclosed in the differential housing *i*. The truss rod *n*, located on the under part of the axle, serves to strengthen it, and the rods and levers on the front of the axle tube are for actuating the brakes, which are located at *d* and *o*. There are two sets of brakes, the one set being internal expanding brakes, while the other set, shown at *d* and *o*, are external contracting brakes.

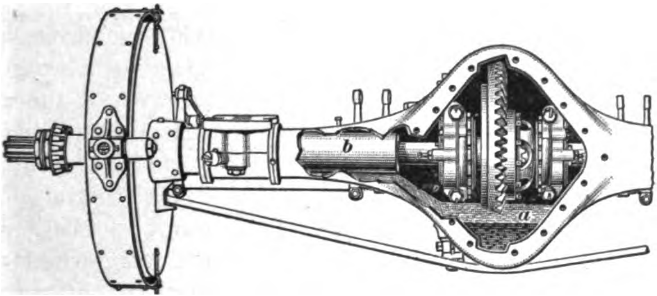

FIG. 30

In operation, the outer differential housing is partly filled with oil, as shown at *a*, Fig. 30, where part of the axle housing is cut away in order to show the reinforcing sleeve *b*, which extends inwards as far as shown. There is thus formed on each side of the axle, between the inside of the axle housing and the outside of each reinforcing sleeve, an oil pocket that catches oil thrown sidewise whenever the car is turning a corner; oil in large quantities is thereby prevented from working along the axle shaft into the wheel hubs and thence into the brakes, where it would greatly reduce their efficiency. When the car is running straight ahead again, oil in the pockets flows by gravity back to the outer differential housing.

38. **Worm-Gear-Driven Rear Axles.**—All the rear axles thus far described are driven from the propeller shaft by means of a bevel pinion on the end of the shaft and a large bevel driving gear attached to the differential. Another form of drive that is used to some extent is the **worm-gear drive,** in which the axle shaft is driven by means of a worm on the end of the propeller shaft, and a worm-wheel on the differential. The worm meshes with the worm-wheel and turns the differential, just as the bevel pinion and gear do in the more ordinary form of axle. The worm-gear drive may, of course, be used on any type of rear axle, just the same as the bevel-gear drive.

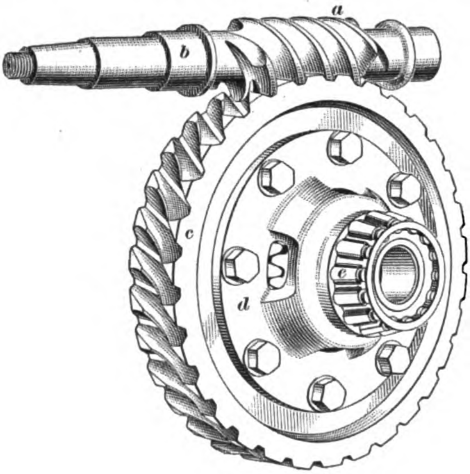

FIG. 31

An example of a worm and worm-wheel is shown in Fig. 31, which illustrates, in perspective, the complete differential-gear assembly of a Timken-David Brown rear axle removed from the axle housing. The worm *a* is integral with the shaft *b*, and its teeth mesh with the teeth on the wheel *c*. The teeth on the wheel are made concave, as shown, so that they make contact over their entire width with the teeth on the worm. In the example illustrated, the worm is located on top of the wheel, but worm-drive rear axles are also built with the worm

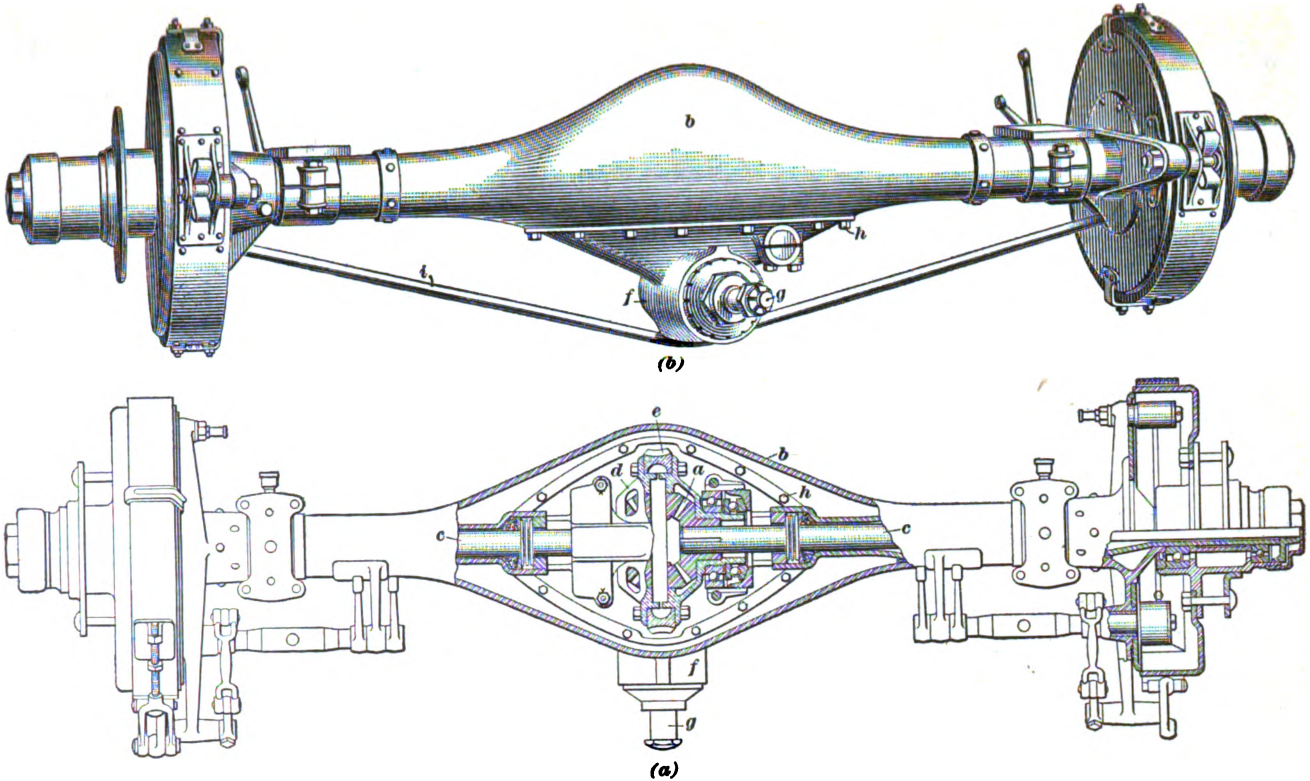

(b)

(a)

FIG. 32

underneath. With the type of construction last named, the worm may run in a bath of oil. In the illustration, one part of the differential housing is shown at *d*; a hub formed thereon carries the roller bearing *e*.

39. A worm-gear-driven rear axle is illustrated in Fig. 32, which shows a front view and a part sectional view of the axle manufactured by the American Ball Bearing Company. In view (*a*), the axle is seen from the top, a part of the housing and of one brake drum being removed in order to show the construction of the differential and the wheel-hub; in view (*b*), the outside of the axle is seen from the front end of the automobile. The axle is of the full floating type and in all respects, except the method of driving, is similar to the full-floating rear axles previously described; therefore, only the drive mechanism proper will be dealt with here. As far as possible, the same parts in the two views are lettered the same.

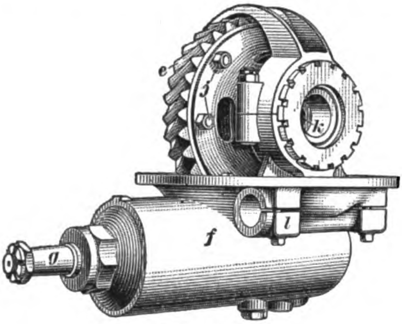

FIG. 33

As will be observed, the differential *a* is enclosed in the outer housing *b*, an extension of which also encloses the axle shaft *c*. To the inner differential casing *d* is bolted a worm-wheel *e*, which is driven by means of a worm located beneath the axle and enclosed in the housing *f*. The worm is integral with the shaft *g*, and its teeth mesh with the teeth on the worm-wheel, so that as the worm is rotated it drives the wheel *e*, and consequently the rear axle shaft revolves. The shaft *g* is connected to the propeller shaft when the axle is installed in the car.

40. Fig. 33 shows a view of the worm-wheel *e*, together with the worm and housing *f*, removed from the axle. These parts are removed by taking out the bolts *h*, Fig. 32, and loosening the truss rod *i*. The bolts that secure the worm-wheel to the inner differential casing *d* are shown at *j* in Fig. 33, and the end *g* of the shaft that carries the worm is seen protruding from the housing *f*. The end of the axle shaft to which the differential gears are fitted extends into the casing at *k*, and a torsion rod can be attached by means of the socket *l*. The entire axle can be readily disassembled by simply pulling out the halves of the axle shaft and lifting out the worm-wheel and differential.

41. Rear-Axle Housings.—A rear-axle housing consists, in part, of an enlarged portion, in the middle of the axle, that encloses the differential gears, and, in part, of two axle tubes that surround the two halves of the axle shaft. The enlarged part, or differential housing, is sometimes called the *bridge*, and the axle tubes are sometimes known as the *bridge tubes*. In some rear axles, the outer differential housing and the axle tubes are separate pieces, the differential housing being either made in two halves or provided with a large opening to permit insertion, inspection, and removal of the differential-gear assembly. The outer differential housings are made of cast steel, cast bronze, cast aluminum, malleable iron, pressed steel, or drop forgings, and the tubes are usually made of drawn steel, although they are sometimes cast. The tubes are fitted to the outer differential housing in a variety of ways, In some cases,

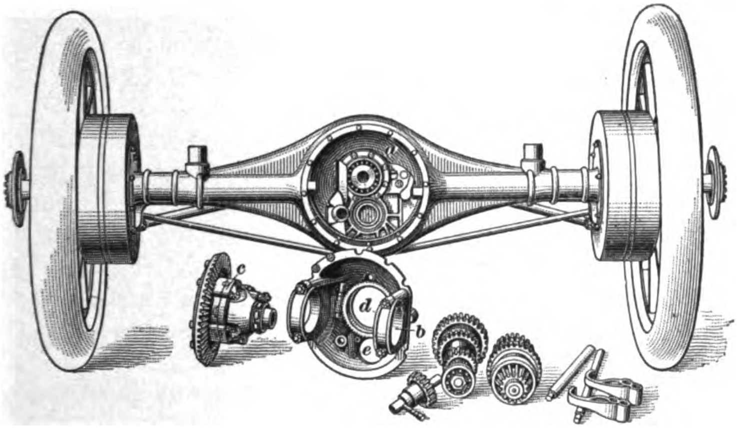

FIG. 34

they are forced into the hubs of the housing and riveted, sometimes they are bolted to the housing, and in still other cases they are brazed.

The rear-axle housing *c* shown in Figs. 24 and 25, is made up of two halves bolted together, the halves of the axle tube *b* being forced into the hubs of the housing and riveted. In the axle shown in Fig. 27, the tubes are fitted to the outer differential housing in the same manner, but, instead of being divided into halves, this housing is provided with a large opening on top for inserting or removing the differential. This opening is ordinarily closed by a cover-plate, which is bolted on. Practically the same construction is shown in Fig. 28. The axle housing illustrated in Fig. 23 is an example of a pressed-steel differential housing made in halves and riveted to the axle tube.

42. Pressed-steel rear-axle housings in which the differential casing and the axle tubes are integral are now in wide use. Such a housing is illustrated in Fig. 29. The housing *f* is pressed in two halves from sheet steel, the top and bottom halves being welded together by the oxy-acetylene method. The housing has two large openings in the front and rear for inserting or cleaning the differential and the driving-gear assembly.

Another pressed-steel axle housing of the same type is shown in Fig. 34, which illustrates the rear axle used on one model of the Marmon automobile. This axle housing is also pressed from sheet steel in two halves, but these are welded together so that the seam is in the vertical plane instead of in the horizontal plane, as in the Timken axle. The axle housing shown in Fig. 34 has, in the rear, a large opening *a*, that is normally closed by a cover-plate—removed in the illustration. A gear-carrying plate *b*, shown removed from the differential housing, carries the differential-gear assembly *c*. When the gear-carrying plate *b* has been removed from the outer differential housing, the transmission shafts and gears can be pulled out rearwards, the transmission in this case being incorporated in the rear axle. The gear-carrying plate *b* has in it two large holes *d* and *e* that receive the rear bearings for the transmission shafts when it is bolted in place. It will be understood that the two halves of the axle shaft have to be partly withdrawn if the differential-gear assembly is to be removed.

43. Torsion Rods and Tubes.—The rear-axle housing of a shaft-driven automobile has a tendency to rotate in a direction opposite that in which the wheels and the axle shaft are rotating when the engine is driving the car. This is due to the action of the bevel pinion on the end of the propeller shaft; it tends to climb up around the large bevel driving gear and to carry the differential housing and axle tube with it. When the clutch is thrown out, so that the engine is not driving the car, and the hub brakes are applied, the wheels tend to drag the axle housing around with them, because the brake bands are supported by the housing; hence, in this case, the axle housing has a tendency to turn in the same direction that the wheels are rotating. In order to overcome the tendency of the rear-axle housing to turn, and to keep it in its correct position, *torsion rods* or *torsion tubes* are often provided.

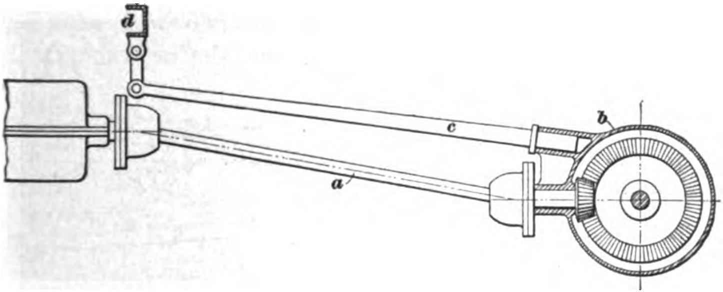

FIG. 35

Torsion rods are solid or hollow rods or channel-section pressed-steel beams of different design connected at one end to the differential housing and at the other end to some part of the automobile frame, thus forming a brace that prevents the housing from turning. Sometimes the turning effort of the axle housing is taken by a tube that surrounds the propeller shaft and is attached at the rear end to the differential casing. This tube is known as a **torsion tube.** In other cases, the turning effort is resisted by the rear springs, which are then bolted to spring seats that are rigidly fastened to the axle housing.

44. A simple method of applying a solid torsion rod is indicated in Fig. 35, which shows the propeller shaft *a* of an automobile and a sectional view of the outer differential housing *b*. The rear end of the torsion rod *c* is rigidly attached to the axle housing; the forward end is connected to the frame *d* of the car by means of a link and pins. The link-and-pin connection allows the axle free play up and down, and also forwards and backwards to some extent, on account of spring action, while at the same time it resists the tendency of the housing to rotate.

45. A torsion member composed of two rods arranged in the form of a triangle, as used on the McCue rear axle, is illustrated in Fig. 36. The rear ends of the hollow rods *a* are bolted to the top and the bottom of the axle housing *b*, and the front ends of these rods are joined to a suitable fitting *c*. This fitting, in turn, is attached by means of a spring connection to a cross-member *d* of the frame of the car. The end of the fitting is made in the form of an eye, through which the spring bolt passes; thus, the fitting is cushioned between the springs *e*, which are suspended from *d*, and the shocks coming on the frame of the car are by this means greatly reduced.

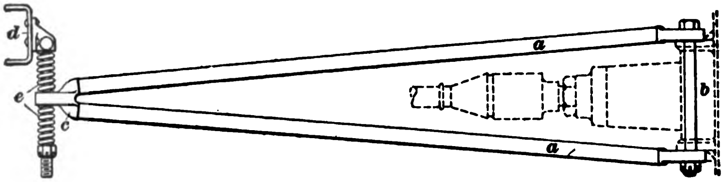

FIG. 36

46. Fig. 37 shows the torsion tube used in one model of the Matheson car. The propeller shaft *a* rotates in the tube *b*, which is rigidly attached at its rear end to the transmission case *c*. In this instance, the transmission is located at the rear axle, so that its casing is an extension of the differential housing; fixing the torsion tube to the casing has the same effect as fixing it to the axle housing. The axle tube is attached to the transmission case by means of a sleeve, or socket, *d*, which is bolted to the casing and in which the end of the tube is held by the screws *e*. The forward end of the tube is carried in the casing *f*, to which it is fastened by the screws *g*; this casing, in turn, is supported on a roller bearing mounted on the propeller shaft. Any tendency of the rear-axle housing to turn is thus prevented by the torsion tube. The propeller shaft is driven from the engine through the shaft *h*.

47. Radius Rods.—In the strict sense, **radius rods** are rods attached at one end to the rear axle of an automobile and at the other end to the frame for the purpose of keeping the axle in alinement with the remainder of the car. These rods, one on each side of the frame of the car, are usually provided with two yoke ends, one of which is pinned to a lug carried by the spring-seat forging or by a special fitting on the axle tube, and the other to a lug on the frame, thereby permitting the axle to move freely up and down, but maintaining equal distances to the ends of the axle. In chain-driven cars equipped with swivel spring seats, the radius rods also serve as take-up rods for adjusting the distance between the engine sprocket and the differential sprocket. These rods are usually equipped with turnbuckles that permit of taking up any undue slack caused by wear. When turnbuckles are not used, the yoke ends are made longer and are threaded, so that the chain tension may be varied by screwing or unscrewing them.

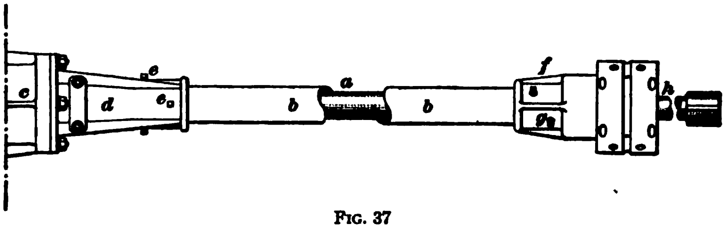

Fig. 37

48. The radius rods used on the Stoddard-Dayton, "Saybrook" model, automobile are shown at *a* and *b*, Fig. 38, which is an illustration of the rear half of the chassis of this car. Each rod is attached at its forward end to a bracket *c* on the frame *d*, and at its rear end to a fitting on the axle tube *e*. The radius rods here shown are fitted with a universal joint *f* at each end, which joints prevent the rods from being strained by any movement of the axle. The axle may move freely up or down, but both ends of the axle are always confined lengthwise of the frame. The method of attaching the three-quarter-elliptic springs is also shown in this illustration. The lower half *g* of each spring is shackled at its forward end by means of links and bolts to a hanger *h* that is fitted to the frame. The rear end of the lower half is shackled to the upper quarter *i*, which is clamped to the rear cross-member of the frame at *j*. Other parts of the chassis shown in Fig. 38 are the gasoline tank *k*, the wheel bearing *l*, the hub brakes *m*, and the brake rods *n*.

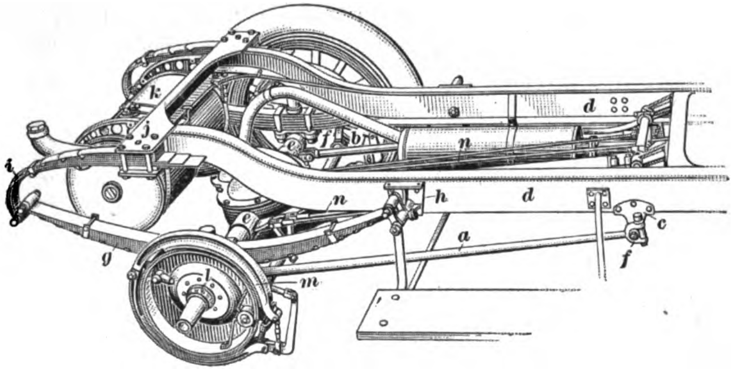

FIG. 38

49. With some shaft-driven cars, the torsion tube that surrounds the propeller shaft, or the torsion rod used with the rear axle, not only serves to take care of the torsional stress produced by the driving pinion, but takes the place of the radius rods used on other cars. Sometimes neither a torsion rod nor radius rods are used, the driving stress being taken by the springs alone, one end of which, usually the forward end, is then hinged to the frame in the case of half-elliptic springs. In the case of three-quarter-elliptic springs, the front end of the lower member is hinged to the frame. With full-elliptic springs, the upper half is rigidly bolted to the frame and the lower half to the rear-axle housing; the two halves of the spring must then be hinged together at least at one end. Whenever springs serve as radius rods, which is almost invariably the case with front axles, the springs must be bolted to spring seats that are rigidly attached to the axle.

Diagonal brace rods, which are also commonly classed as radius rods, are used on a number of automobiles for the purpose of tying the rear axle and the torsion tube together. One of these rods is located on each side of the car, and extends from the outer end of the axle tube to the forward end of the propeller-shaft housing, or torsion tube. Such brace rods usually have yoke ends, and they are attached in the same manner as the true radius rods just described. This form of radius rod is not attached to the frame of the car, so that it does not take the driving stress; it serves only as a stiffener, or brace, holding the axle and the torsion tube in their correct relative positions.

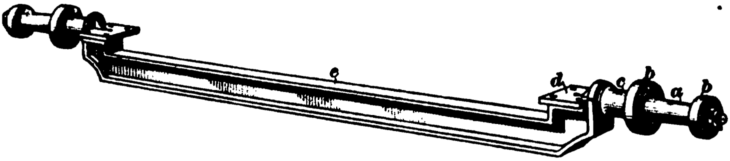

FIG. 39

50. Dead Rear Axles.—Dead rear axles, or axles that are stationary, are usually forged I-beam sections, and sometimes they are made with a drop between the spring seats; that is, the middle part is lower than the ends. Such an axle, as used in the Great Chadwick car, is illustrated in Fig. 39. Each of the spindles *a* carries two annular ball bearings *b*, upon which the wheels rotate. The parts *c*, between the spindles and the spring seats *d*, provide room for the radius rods and braking mechanism. The main part *e* of the axle is dropped below the spring seats, as shown. Some dead rear axles are made perfectly straight and of rectangular cross-section, but as a rule the I-beam section is used.

51. Dead axles are used with only the double-chain type of drive, in which the rear wheels are driven from a countershaft by means of side chains. The location of the chain and sprockets by means of which the wheels are driven is shown in Fig. 40, which presents a view of the rear of the chassis of a Chadwick automobile. The upper half *a* of the chain case is lifted, exposing to view the chain *b*, which passes around the sprocket *c* on the end of the countershaft and the sprocket *d* on the wheel hub. In this case, the sprocket *d* forms part of the brake drum *e*, which is bolted to the spokes of the wheel by the bolts *f*. On the inside of the chain case, and forming a part of it, is the adjustable radius rod *g*, by means of which the distance between the sprockets *c* and *d* can be adjusted, or changed, to allow for wear on the chain. The chain case, when closed, serves to protect the chain from dust and dirt.

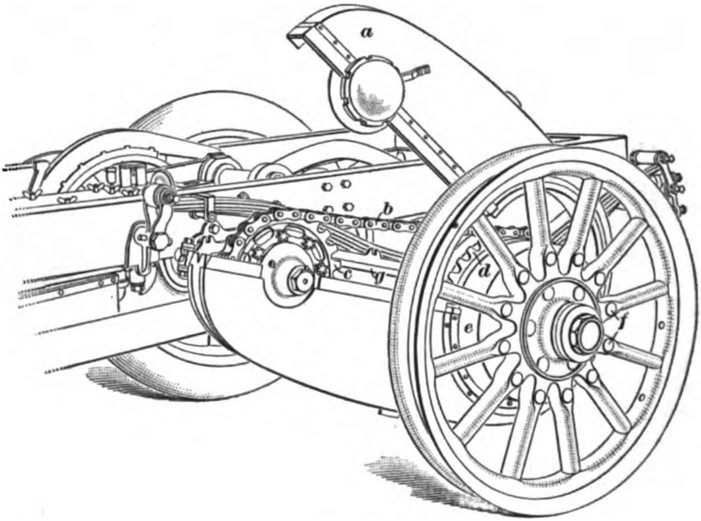

Fig. 40

52. Automobile Chains.—The automobile chains now in use for driving the rear wheels of a car are of the *roller type* exclusively. This type is so named because it is provided with rollers, which rotate on pins connecting the side links. All roller chains consist of these essential parts, although there are several different methods of attaching the side links to the pins.

53. A **Baldwin detachable roller chain,** or one that can be separated at each link, is illustrated in Fig. 41. The pins *a* are formed with a head on one side of the chain, and on the other side they are provided with special clips that hold the links in place. The rollers *b* rotate on bushings *c* that surround the pins *a*. At one end of each pin are milled two slots *d*, into which, after the side link *e* is slipped on, the clips, or fasteners, *f* are forced and closed by a pair of flat-nose pliers. These clips may be removed by means of a screw-driver or with a special tool provided by the chain manufacturer. The pins, or studs are knurled at the neck where they pass through the links, into which they are forced under pressure.

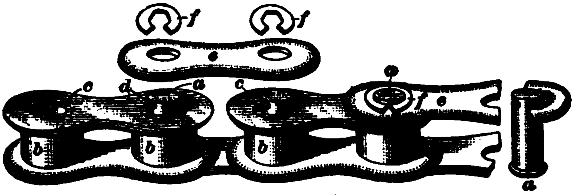

FIG. 41

54. A form of roller chain that can be detached at only one link, called the *master link*, or *connecting link*, is illustrated in Fig. 42. This chain, like the one shown in Fig. 41, is made up of rollers *a* that run on bushings *b* supported by pins *c*. In this case, however, the pins are riveted on both sides of the chain, so that the side links cannot be removed except at the master link. In the illustration, the master link is shown at the right-hand end of the piece of chain. Instead of running on rivets,

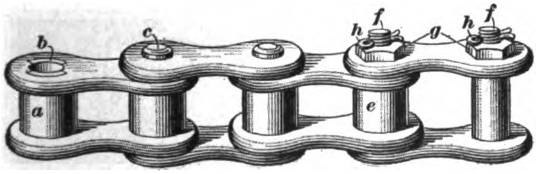

FIG. 42

the rollers *e* of this link turn on bolts *f* that are fitted with nuts *g* and cotter pins *h*, so that the chain can be separated at this point by removing the bolts. Each chain is provided with one such master link, or connecting link.

The chain illustrated in Fig. 42 is known to the trade as the **Brampton chain.** There are several other makes of detachable, as well as riveted, roller chains on the market; these are generally known to the trade by the names of their makers, and while they embody the same general principle they naturally differ somewhat in their details.

SPRINGS AND FRAMES

AUTOMOBILE SPRINGS

55. Automobile springs, which are used for supporting the frame and body of an automobile on its axles, are made up of long and comparatively thin and narrow curved steel plates, or leaves, of different lengths. These leaves are usually held together by a bolt at the center, although in some springs this bolt is eliminated and clips are used entirely. The shorter leaves are usually prevented from moving sidewise by small lips at their ends, by projections of one leaf entering corresponding depressions of the next leaf, or by clips that pass around them. Springs are assembled in a number of different shapes and are named according to the form in which they are made up.

56. Fig. 43 shows each of the different types of automobile springs in outline, as well as the way in which the parts are held together.

A **full-elliptic spring,** or, simply, an *elliptic spring*, is one in which the leaves are bent, or arched, so as to take the form of an ellipse. Fig. 43 (*a*) shows a common form of elliptic spring. It is composed of an upper and a lower half joined at both ends with bolts. This spring is sometimes known as the *button-head elliptic spring*, because the bolts are commonly made with a head resembling a button.

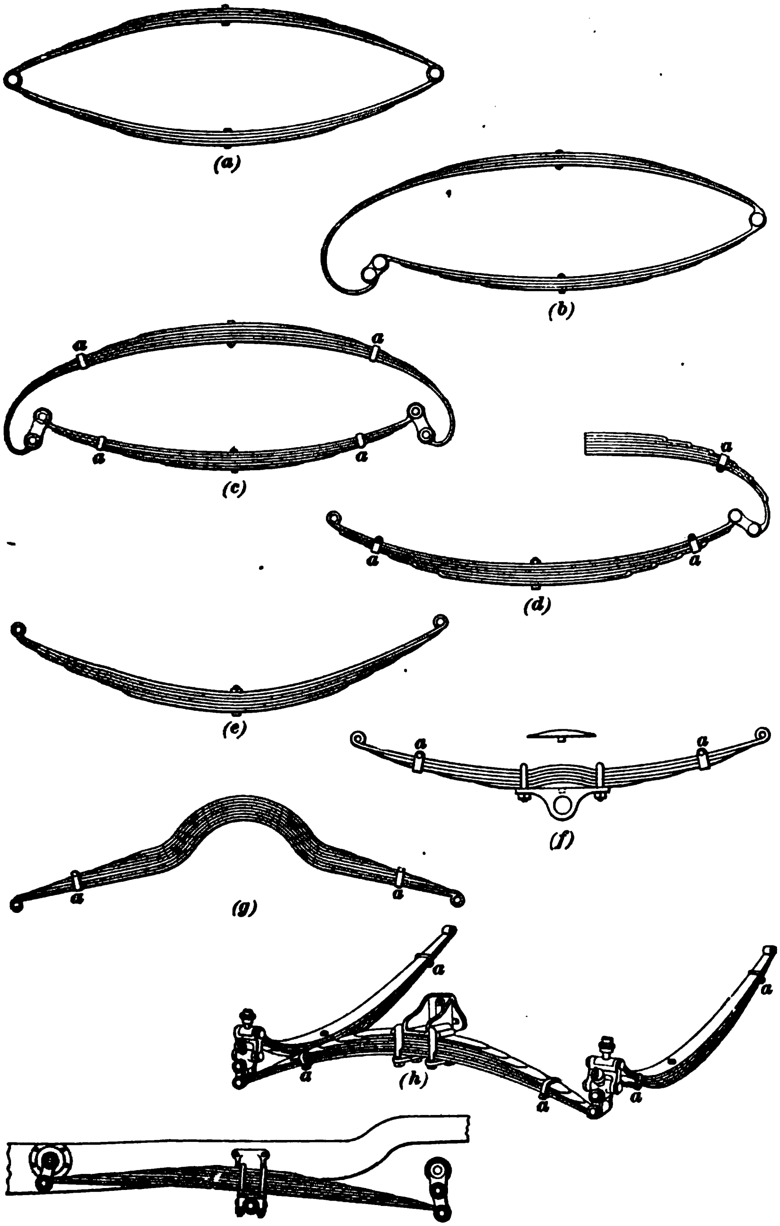

FIG. 43

A **single-scroll elliptic spring** is illustrated in view (*b*). This spring differs from the common elliptic spring in that its upper half is provided with a scroll at one end and is joined to the lower half at this end by a shackle and at the other end by a bolt, instead of having bolts at both ends. The scroll end is curved down around the lower half and is attached to it by links and bolts, forming the shackle.

A **double-scroll elliptic spring,** as shown in view (*c*), is shackled at both ends, the upper half being provided with two scrolls.

The different types of elliptic springs so far described are used as front springs in some cars and as rear springs in others, although they are not employed very extensively in either case.

A **three-quarter-elliptic spring** is one composed of the bottom part and one-half of the top part of a full elliptic spring, joined either by a bolt or by a shackle. Such a spring, in which the upper quarter is scrolled and shackled to the lower half, is shown in view (*d*). This type of spring is used more than any other as a rear spring on pleasure cars.

A **half-elliptic spring** is simply half of a full-elliptic spring. An ordinary spring of this type is shown in view (*e*). A specially constructed half-elliptic spring, known as the *Titanic spring,* which does not have a bolt at the center, is shown in view (*f*). The leaves of this spring are arched so as to form a hump at the middle, and are clamped over a filler that maintains this hump. Greater strength is claimed for this spring in the center, on account of doing away with the bolt hole that is necessary in the ordinary spring. The half-elliptic spring, or *semi-elliptic spring*, as it is sometimes called, is used largely on pleasure automobiles for supporting the front end of the frame; in a few cases, it is used for supporting the rear end.

A **cross-spring** is a spring that runs crosswise on the car, and therein it differs from the springs previously described, which are arranged lengthwise with the frame. The cross-spring resembles an inverted semi-elliptic spring, as will be seen on referring to view (*g*), which shows the rear cross-spring of the model T, Ford car. When in place on the car, it is shackled to lugs on the axle at both ends and supports the load at its center. Cross-springs are employed only on the lighter class of automobiles.

In view (*h*) is shown a **platform spring,** of which the side members are half-elliptic springs shackled to the cross-member, and the rear member is an inverted half-elliptic spring. This spring assembly is used as a rear spring on a few pleasure cars, and it is attached to the frame at the forward ends of the side members and at the center of the cross-spring.

What is known as a **cantilever spring** is shown in view (*i*). It consists of an inverted and very flat semielliptic spring shackled at its rear end to the rear axle and at its front end to the frame, and pivoted at its middle to the frame. The spring may also be attached to the axle by means of a roller connection, which allows a free backward-and-forward motion. When supported in this manner, it extends underneath the axle. A cantilever spring may also consist of a quarter-elliptic spring, having its big end rigidly attached to the frame and its small end shackled to the axle. A cantilever spring is used as a rear spring wherever employed, but it is found at present on a comparatively small number of automobiles, among which may be mentioned the King and the Edwards-Knight cars.

57. After a spring has been compressed, the following upward movement, or *recoil*, tends to cause separation of its leaves, which separation may result in their breakage. This fact is especially true of the *master leaf*, which is that leaf on the ends of which are formed the eyes for attaching it to the frame of the car, to the shackles, or to the other part of the spring in case of other than the half-elliptic spring. To reduce this danger of spring breakage through recoil, many springs are now fitted with *recoil clips*, which are narrow clips that surround several spring leaves and the master leaf, and that permit free sliding of the leaves on each other while restraining their separation. Such recoil clips are shown at *a*, Fig. 43 (*c*), (*d*), (*f*), (*g*), and (*h*).

SHOCK ABSORBERS

58. **Types of Shock Absorbers.**—Devices that are used to modify the action of automobile springs and thus prevent excessive vibration of the body of the car while passing over rough roads are called **shock absorbers.** These devices are attached to the frame and the springs or axles, so that they offer resistance to the action of the springs and tend to do away with any jar when the springs are suddenly compressed, or when they recoil. There are three types of shock absorbers, depending on the method used to obtain the required resistance: (1) those which depend on the frictional resistance of two or more surfaces in contact; (2) those which depend on restricting the flow of a fluid; and (3) those which depend on the action of some kind of supplementary springs.

59. **Friction Shock Absorbers.**—One of the most widely used friction shock absorber is the Truffault-Hartford device, which is shown in Fig. 44 (*a*). It is made up of circular disks. Some of these move with the arm *a*, which is attached to the frame *c* in the manner shown, and some with the arm *b*, which is attached to a special spring clip *d* or to a lug carried on a plate held in place by both spring clips. The frictional tension on the disks may be adjusted by loosening or tightening the nut *e*. This nut presses against a five-fingered bearing plate *f* that carries a pointer *g* for indicating the degree of pressure on the outer disk. The action of the springs is modified by the frictional resistance of the disks when the arms *a* and *b* move toward each other, as when the springs are compressed, or away from each other when the springs recoil.

60. The device shown in Fig. 44 (*b*) is called the **Gabriel rebound snubber,** or **check,** because it has no effect on the compression of the spring, but serves merely to check its movement on the recoil. It consists of the fabric belting *a* that is faced with a flexible brass friction band *b* and is wound about a base consisting of a fixed half *c* and a movable half *d*; the two halves of the base are separated by the coil spring *e*. The telescopic connection *f* permits the movement of the

half *d* of the base, so that when the springs rebound, the coils of belting tighten and unwind, thus creating a friction on the brass band and gradually absorbing the shock of the recoil. As the springs compress again and allow the frame and axle to move toward each other, the coil spring *e* expands and takes up the slack in the belting. When in use, the stationary half *e* of the base is fixed to the frame of the car and the piece of belting is attached to the axle, as shown.

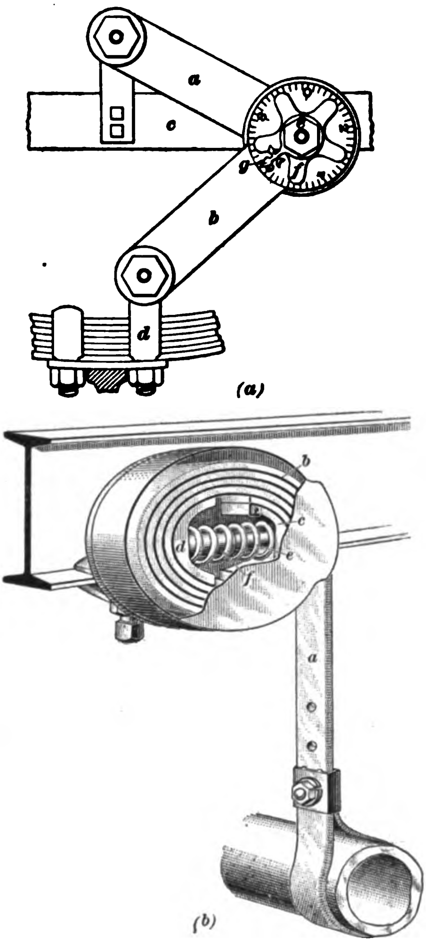

FIG. 44

61. Fluid Shock Absorbers.—In one type of the so-called fluid shock absorber, a piston reciprocates in a cylinder in which there are no valves. A small by-pass is provided in the side of the cylinder, so that the frictional resistance to the passage of air through the by-pass from one side of the piston to the other is such that the passengers practically ride on an air cushion.

In another fluid shock absorber, glycerine is placed in a vertically arranged cylinder that is connected to the axle, a piston that moves inside the cylinder being connected to the frame. Under the alternate compression and expansion of the springs, the glycerine is forced through small passages from one side of the piston to the other. The hollow piston rod is provided with a regulating valve by which the modifying effect of the shock absorber may be varied at will.

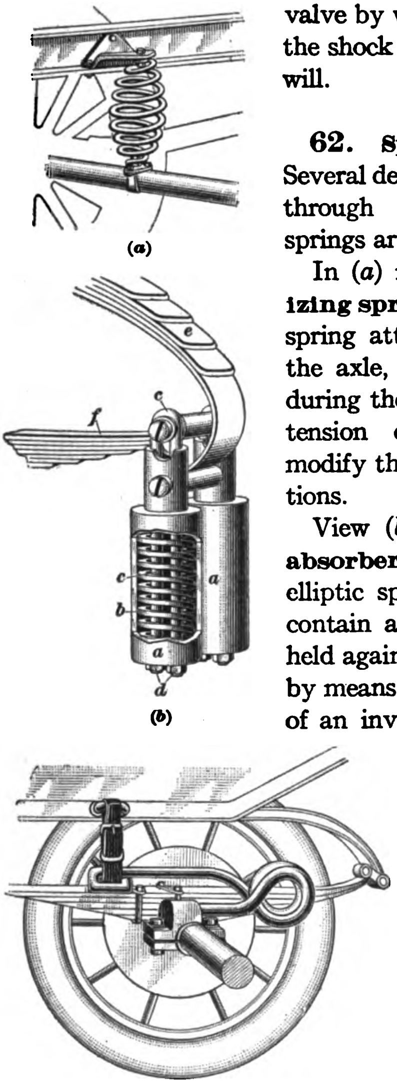

(a) (b) (c)

Fig. 45

62. Spring Shock Absorbers. Several devices that absorb road shocks through the action of coiled-steel springs are shown in Fig. 45.

In (*a*) is shown the **Sager equalizing spring,** which is a simple coiled spring attached to the frame and to the axle, so as to be in compression during the descent of the body and in tension during its rise, and thus modify the spring action in both directions.

View (*b*) shows the **J. W. shock absorber** applied to a three-quarter elliptic spring. Each of the tubes *a* contain a helical spring *b*, which is held against the upper end of the tube by means of a bolt *c* having the shape of an inverted **U**. The lower end of the spring *b* presses against a plate that fits inside of the tube and is supported by the nuts *d* on the end of the bolt. The plate can slide up or down inside of the tube as the spring is compressed or extended. The tubes are attached to the top member *e* of the spring, and the inverted **U** bolt is carried by the bottom member *f*, so that as the body of the car descends the shock absorber springs are first compressed, thus modifying the action of the main springs. When applied to a car equipped with semi-elliptic springs, one part of the absorber is attached to the frame and the other part to the spring.

The shock absorber shown at (*c*) is a recoil checking device. It consists of a curved spring fastened at one end to the axle, and attached at the other end to the frame by means of a strap. This kind of device is designed to eliminate upthrow of the body in passing over obstructions in the road, and to prevent breakage of the springs by absorbing the recoil.

63. The rebound of the spring is sometimes limited by making use of *reversely curved leaves* on top of the main leaf, as is shown in Fig. 46. The reverse leaves *a* and *b* tend to counteract the rebound of the spring and thus prevent it from breaking. Before assembling, the reverse leaves have the form indicated by the dotted lines, so that when they are forced into place, and the bolt *c* is applied, they tend to straighten out the spring and in reality to weaken it. But when the spring rebounds after being compressed, these short leaves prevent it from coming back to its original position with too sudden a shock. It is thus seen that this form of shock absorber, like those illustrated in Fig. 44 (*b*) and Fig. 45 (*a*), only limits the movement of the spring on the recoil.

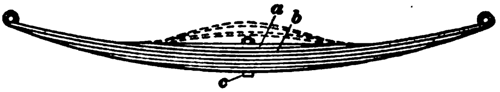

FIG. 46

AUTOMOBILE FRAMES

64. Types of Frames.—The **frame** is that part of the automobile that supports the body and machinery of the car; the frame rests on the springs. With regard to the material of which they are built, frames used on pleasure cars are of two kinds, namely, *pressed-steel frames* and *wooden frames*.

Pressed-steel frames are used almost exclusively, wooden frames being used on only a few cars. Where wooden frames are used, they are either armored with steel plates or laminated, that is, made up of several layers or laminations. A frame made of wooden sills is used on the Franklin automobile, which offers the best illustration of this type. On this car, the main frame is made of three laminations of second-growth white ash with a thin strip of wood placed on the top of the sills to prevent water from getting between the laminations, the whole being glued together.

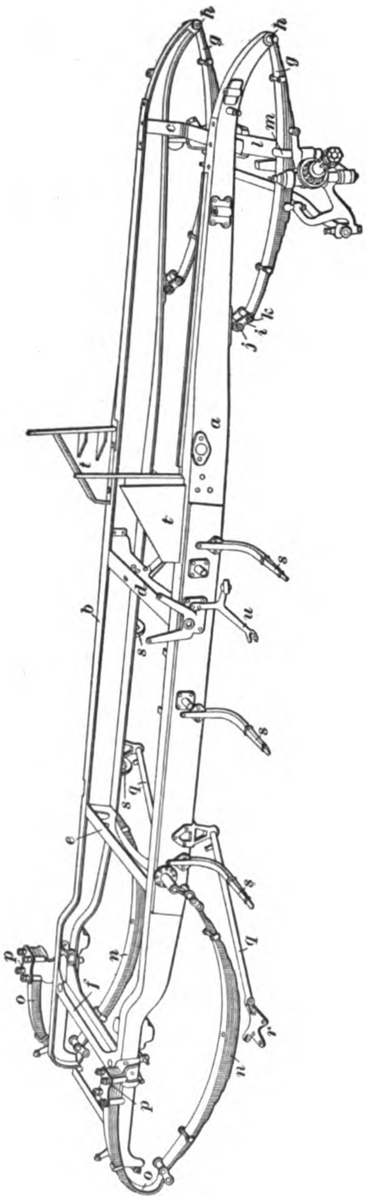

FIG. 47

65. Pressed-Steel Frames.—Pressed-steel frames are made up of parts pressed, or formed, to the required shape in hydraulic presses. The longitudinal sills, or side rails, running lengthwise on the car, are practically always made in channel sections, and the cross-members, running from one side to the other, are largely made in the same shapes.

A perspective view of the pressed-steel frame used on one model of the Packard car is shown in Fig. 47. Besides the various brackets that are riveted to the frame, the front and rear springs and the front axle are shown in place, illustrating how those parts are attached to the sills. The channel-shaped side rails, or sills, *a* and *b* are connected by the four cross-members *c*, *d*, *e*, and *f*, which are also formed in channel sections. The front springs *g* are hinged to the side rails at the forward end by the bolts *h*, and are shackled at the rear by the links *i* and bolts *j* and *k*. These springs are held in place on the front axle *l* by the spring clips *m*.

The lower halves *n* of the rear springs are shackled to the side rails at the forward end, and to the top quarter *o* of the springs at the rear. These springs are attached to the frame by the clips *p*. The radius rods *q*, with brackets *r* for attaching them to the rear axle, are shown in place. Brackets *s* support the running boards, and brackets *t* hold the toe board in place; the lever *u* is part of the reversing mechanism.

While all pressed-steel automobile frames are not built exactly alike, the foregoing will serve to illustrate how the parts are arranged and attached on a typical frame. It is to be noted that this frame is mounted on top of the springs and above the axles. This is the usual method of mounting an automobile frame, and is employed on the great majority of cars.

In many cars, the frame is raised over the rear axle, as shown in Fig. 47, in order to give clearance over the rear axle and to permit the body to be brought lower to the ground than is possible with a straight frame; such a frame is said to be *upswept*, or *kicked up*. When it is offset vertically in the same manner at the front, the frame is spoken of as a *double kick-up frame*. Many frames are narrowed at the front end in order to give a larger turning radius to the front wheels, which means a shorter turning radius for the car; such a frame is said to be *inswept* at the front. The frame shown in Fig. 47 has this construction.

66. Underslung Frames.—An **underslung frame** is a frame that is located underneath the axles and suspended from the springs. This type of frame gives a low center of gravity to the car, but requires the use of larger wheels than can be used on cars having the frame mounted on top of the springs and axles.

The underslung method of frame suspension is illustrated in Fig. 48, which shows the location of the springs and frame on one model of the Regal car. The frame *a*, which is curved upwards at each end, is carried underneath the axles by semi-elliptic springs in front and in the rear. The front springs *b* are mounted on top of the axle and are hinged to the frame at the forward end; at their rear, they are shackled to a bracket *c* that is riveted to the frame. The rear springs *d* are mounted under the axle and are shackled at both ends, radius rods being used to keep the rear axle in line with the remainder of the car.

The chief advantage claimed for the underslung frame is that, on account of its low center of gravity, the stability of the car is increased and it will not easily overturn. Another advantage claimed is that easy riding and long tire life are obtained by the use of the larger wheels, which this type requires.

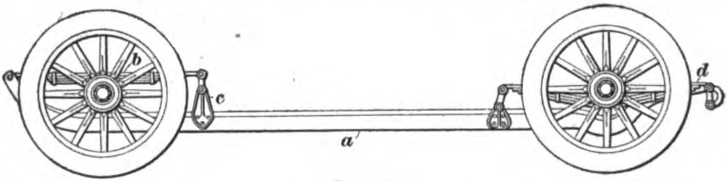

FIG. 48

67. Subframes.—Some automobiles are fitted with **subframes**; that is, auxiliary frames for the purpose of supporting the engine and the speed-change gear. These frames are built into the main frame, and consist of two longitudinal members located immediately inside of the main side rails, and running from the front cross-member to an intermediate cross-member. The engine and the transmission case are mounted on these longitudinal members. Like the main frame, the subframe is generally made of pressed-steel shapes of channel cross-section, although tubular subframe members are sometimes found

GASOLINE AUTOMOBILE ENGINES

PART 1

PRINCIPLES OF OPERATION

FOUR-CYCLE PRINCIPLE

DEFINITIONS AND NAMES OF PARTS

1. An **internal-combustion engine** is an engine in which power is generated by burning within the cylinder, a combustible mixture of air and gasoline, air and kerosene, or air and any other liquid fuel. The burning of the fuel results in the production of gases of high temperature and pressure, which act directly on a piston that moves back and forth in a cylinder to which the air and fuel are admitted and from which the burned gases are discharged by means of suitable valves. The required mechanical work is done by the piston through the proper mechanism. Internal-combustion engines are classified as *single-acting engines* and *double-acting engines*, depending on their construction and operation. Engines in which the cylinder is so constructed that gas is admitted to only one end and burned on only one side of the piston are **single-acting engines**, because the expanding gases force the piston in but one direction; engines in which gases are admitted to each end of the cylinder alternately, and burned first on one side of the piston and then on the other, forcing it first in one direction and then in the other, are **double-acting engines**. All gasoline automobiles now in use are driven by some type of the

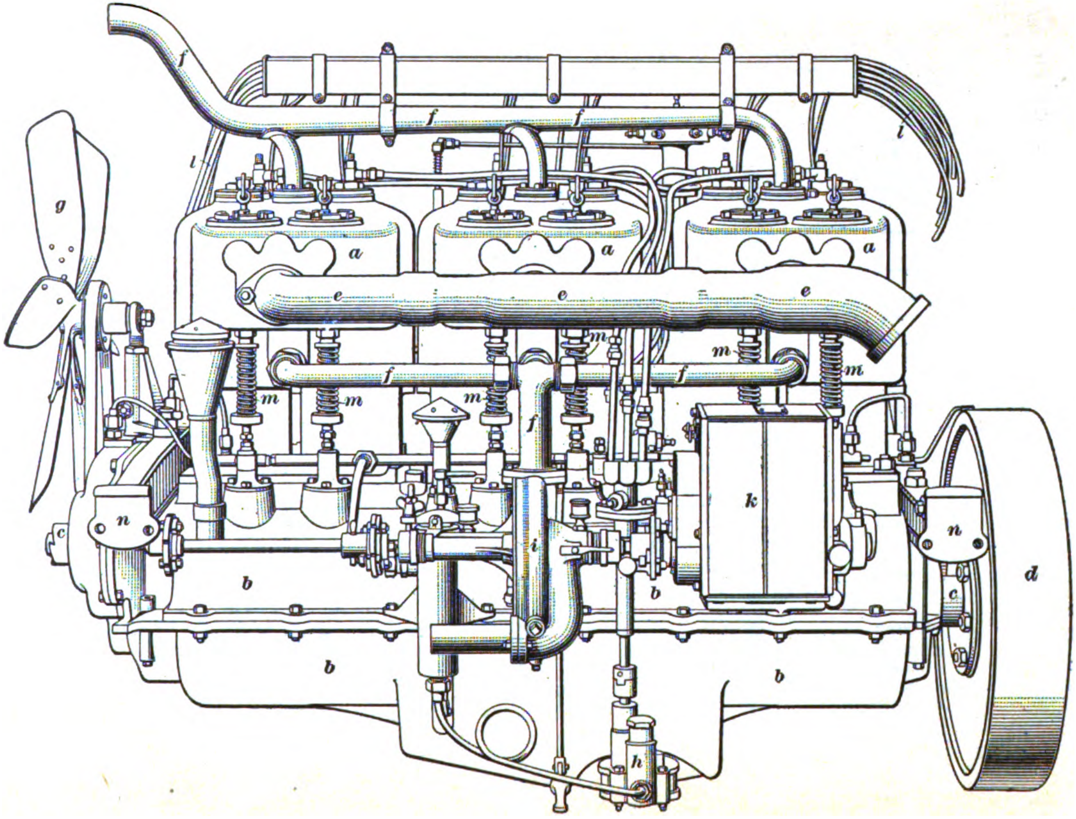

FIG. 1

single-acting internal-combustion engine. Double-acting internal-combustion engines have never proved successful as automobile engines, but are used to some extent as stationary engines, being sometimes employed in power plants where gas instead of gasoline is used as fuel.

2. An external view of a typical modern poppet-valve gasoline automobile engine is presented in Fig. 1, which shows the left side of one model of the Pierce-Arrow six-cylinder engine. The cylinders are cast in pairs—that is, there are two cylinders in each of the castings, or *blocks*, *a*. The cylinders are vertically arranged on the *crank-case b*, which supports them and which contains a shaft *c*, called a *crank-shaft*, extending its entire length. The crank-shaft, being rapidly rotated by the up-and-down movement of the pistons in the cylinders, through suitable *cranks* and *connecting-rods*, imparts a rotary motion to the driving mechanism of the automobile through a *clutch* located at the rear of the engine inside of the *flywheel d*. The combustible mixture enters the cylinders at the right side of the engine, and the burned gases resulting from the explosions escape through the *outlet manifold e*. The piping *f* is for the purpose of circulating water through *jacket spaces* surrounding the cylinders and thus cooling them and preventing them from being burned or otherwise injured by the heat due to the explosions. The *fan g*, located at the forward end of the engine, also belongs to the cooling system, its purpose being to draw air through a *radiator*, which is used to cool the circulating water. Other important parts shown are the *oil pump h*, with the necessary piping, for lubricating the engine; the *water pump i*, for circulating the cooling water; an *electric generator k*, for supplying electric current for lighting purposes as well as for ignition; the *wires l*, for carrying electric current for igniting the combustible mixture in the cylinders; and the *valve springs m*, used for closing the valves, which permit the gases to enter and escape from the cylinders. The engine is supported in the frame of the car at four points by means of the supports *n*, two of which are located on each side. These supports are secured to the side members of the frame.

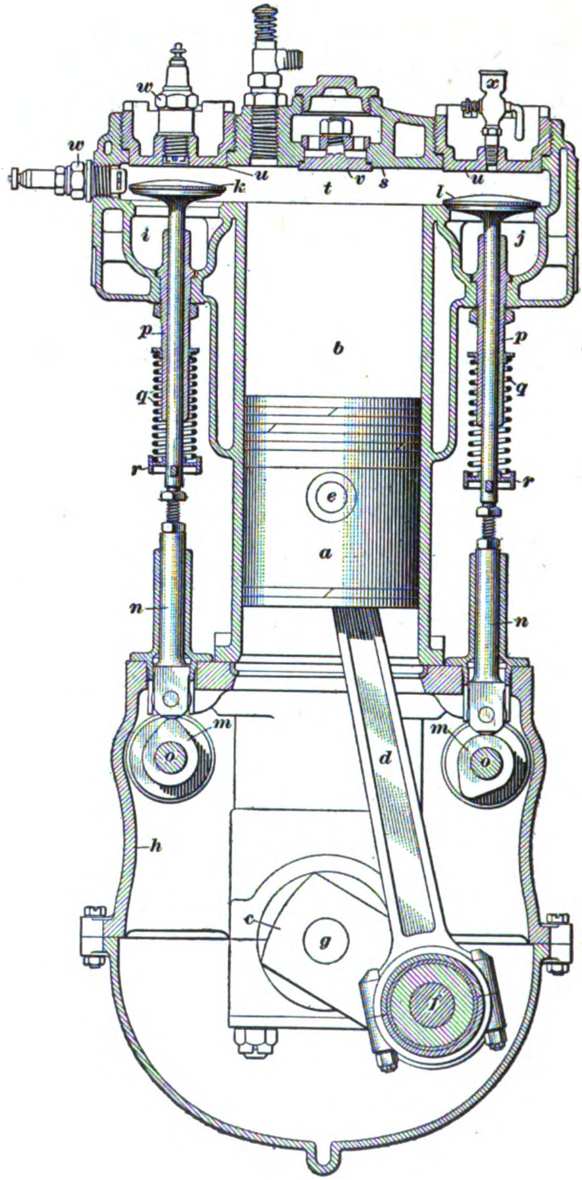

Fig. 2

3. A cross-sectional view of the Pierce-Arrow six-cylinder engine showing the arrangement of the parts inside of one of the cylinders is seen in Fig. 2. This illustration shows one of the cylinders cut in half crosswise and viewed from the forward end of the engine. The oil pump, water pump, and other accessories are omitted in order to simplify the view.

The piston *a* is free to move up and down within the hollow, or *bore*, of the vertical cylinder *b*. The piston is connected to the crank *c* by means of the *connecting-rod d*, which is attached at its upper end to the *piston pin e* and at its lower end to the *crank-pin f*, so that an up-and-down motion of the piston causes the crank to rotate. The *crank-shaft g*, being integral with the cranks, also rotates, and through it the driving mechanism of the car is caused to turn. The crank-shaft is carried in bearings supported by the *crank-case h*.

At *i* is seen an opening called the *inlet port*, through which the mixture of gasoline vapor and air enters the cylinders; and at *j* is the *exhaust port*, through which the burned gases, or products of combustion, are expelled. These openings are fitted with *valves k* and *l*, called the *inlet valve* and the *exhaust valve*, respectively, by means of which the ports may be closed. The wall of the port on which the valve rests when in the closed position is known as the *valve seat*. The valves are operated by means of *cams m* and *push rods n*. The cams are carried on *cam-shafts o*, which are rotated by means of gears from the crank-shaft, and, as the cams revolve, the *lobes*, or raised portions, strike on and raise the push rods, which in turn lift the valves. This cam-shaft always rotates at one-half the speed of the crank-shaft; in other words, for every two revolutions of the crank-shaft the cam-shaft makes one revolution. It will be noticed that in the illustration the inlet valve cam is turned so that its lobe is directly underneath the push rod, in which position the inlet valve is raised and the inlet port opened; the lobe of the exhaust valve cam is at one side of the push rod, in which position the exhaust valve remains on its seat in a closed position. The push rods are provided at the bottom with rollers on which the cams strike. The valves are held in place by the guides *p* in which the valve stems slide and by the *springs q*. The springs are constantly compressed so that they push downwards on the caps *r* and keep the valves closed except when the lobes of the cams strike the push rods.

The *cylinder head* is seen at *s* and between it and the valves is the space *t*, called the *combustion chamber*, or the *compression space*, because it is in this space that the burning, or combustion, of the fuel, takes place. In the cylinder head are *plugs u* and *v*, which can be taken out when the valves are to be removed or the cylinder cleaned. The *spark plugs w* are screwed into the combustion chamber for the purpose of producing electric sparks to ignite the fuel, and the *priming valve x* provides a means for pouring extra fuel into the cylinder when necessary or for pouring kerosene in to clean the piston face or cylinder walls.

4. The end of the cylinder that is attached to the crankcase is called the *crank end*, and the other end is called the *head end*. The movement of the piston from the head end to the crank end is called the *forward*, or *outward*, *stroke;* the movement in the opposite direction is called the *return*, or *inward*, *stroke*.

When the piston has reached the end of either stroke, the connecting-rod and crank are in a straight line, and the pressure of the gases on the piston is transmitted directly to the crank and bearings, none of it being used to turn the crank. When the crank occupies this position it is said to be on its **dead center.** There are two dead-center positions, corresponding to the two extreme positions of the piston. When the piston is at the extreme bottom end of its stroke, the crank is on its *outer*, or *lower*, *dead center;* and when the piston is at the extreme top end of its stroke, the crank is on its *inner*, or *upper*, *dead center*.

5. The **charge** is a mixture of fuel and air taken in at one stroke of the engine. It varies according to the condition of operation, and may sometimes be sufficient to fill the cylinder completely at atmospheric pressure, while at other times it may be reduced. The proportions of fuel and air may also vary from time to time.

The burned gases, which are expelled from the engine after having performed the work required, are known as the *exhaust gases*, or, simply, the *exhaust*. These gases are waste products and are allowed to escape into the atmosphere.

6. Gasoline automobile engines are either *vertical* or *horizontal*, depending on the manner in which the cylinders are arranged. Engines having their cylinders arranged vertically, like that illustrated in Figs. 1 and 2, are **vertical engines**; engines having their cylinders arranged horizontally are **horizontal engines.** Practically all engines now used to propel gasoline pleasure automobiles are of the vertical type.

GASOLINE-ENGINE CYCLE

7. A **cycle** is any chain, or series, of events, or happenings, occurring over and over in the same order. As applied to a gasoline engine, the term cycle refers to the operations, or events, that take place within the cylinder from one explosion to the next, and by means of which the fresh charge is drawn into the combustion chamber and exploded and the exhaust gases expelled. These events always occur in the same order and are repeated after each explosion. The cycle on which an internal-combustion engine operates is one of the distinguishing features of different types.

8. The modern cycle of gasoline engines is known as the **Beau de Rochas cycle,** after the name of the inventor, and more commonly as the **Otto cycle,** after the name of the engineer who carried out its early commercial application. This cycle, in its broad and strictly scientific meaning, does not take into consideration the method of getting the charge of combustible mixture into the cylinder nor that of expelling the hot burned gases.

The steps of the cycle in the engine of Fig. 2 are as follows: Suppose that, at the beginning of operations, the valves are closed, that the piston is at its position farthest out toward the crank-shaft, and that the cylinder is filled with a combustible mixture at atmospheric pressure. By forcing the piston inwards to the completion of the inward stroke, the charge will be compressed into the compression space, or combustion space. Now by igniting the compressed charge, the pressure will be increased still more by the heat of combustion. The pressure tends to drive the piston outwards, and as soon as the rotating crank-shaft has made the angle between the connecting-rod and crank sufficiently great, the pressure of the hot gases against the piston face will drive the crank-shaft. The burned gases expand to fill the increasing volume of the cylinder as the piston moves outwards and the pressure decreases. At the completion of the outward stroke, the exhaust valve is opened and the hot burned gases escape by expansion until the pressure falls to that of the atmosphere. This completes the Otto heat cycle.

9. The method of expelling the burned gases that remain in the cylinder at atmospheric pressure and of taking in a fresh charge of combustible mixture has not yet been considered. This is accomplished in two distinct ways, which are the foundation for the commercial names, *four cycle* and *two cycle*, as applied to automobile engines.

10. A **four-cycle engine** is one in which four complete strokes of the piston are required to complete the cycle. In this engine the burned gases remaining in the cylinder after the exhaust valve has been opened and part of the hot gases removed by expansion are expelled in part by a separate inward stroke of the piston, and a fresh charge is drawn into the cylinder through the inlet port by a separate outward stroke. Generally speaking, one event occurs during each of the four strokes of this cycle; that is, considering the stroke by which the charge is drawn into the cylinder as the first stroke, the mixture is compressed during the second stroke, burned during the third stroke, and the exhaust gases are expelled during the fourth stroke, after which the conditions are the same as at first and the cycle is complete.

11. A **two-cycle engine** is one in which only two strokes of the piston, corresponding to one revolution of the crank-shaft, are required to complete the cycle. In this cycle an explosion occurs on each downward stroke of the piston, the fresh charge being admitted and the exhaust gases expelled at or near the end of this stroke. Hence, for the same number of revolutions of the crank-shaft, there are twice as many explosions in the cylinder of a two-cycle engine as in that of a four-cycle engine. However, this does not mean that the power developed by a two-cycle engine is twice as great as that produced by a four-cycle engine of the same size and speed, for, on account of the inefficient *scavenging*, or cleaning, of the cylinder after the explosion and the lower compression pressure in the two-cycle engine, the explosions are not so powerful as in the four-cycle engine. It is generally estimated that a two-cycle engine of a certain size and speed will develop about 1.65 times as much power as a four-cycle engine of the same size and speed.

12. The two types of internal combustion engines just defined are sometimes designated by the longer terms *four-stroke Otto-cycle engine* and *two-stroke Otto-cycle engine* to distinguish them from other engines that operate on cycles that differ from the Otto. However, since all automobile engines of the internal-combustion class operate on the Otto cycle, the terms four-cycle and two-cycle are sufficiently definite in meaning when limited to this field of application.

13. It has been found that by compressing the charge before igniting it, a greater amount of power can be obtained from a given quantity of fuel than by simply burning it at atmospheric pressure. In other words, the efficiency of the internal-combustion engine is increased by compressing the charge before igniting it. Compressing the charge heats it; hence, on account of the danger of overheating the cylinder the compression pressure is limited to from 60 to 75 pounds per square inch, as shown by a pressure gauge. Another disadvantage of too high a compression is that the bearings and joints of the moving parts of the engine are liable to give trouble by knocking or pounding. All internal-combustion automobile engines compress the charge before igniting it.

OPERATION OF FOUR-CYCLE ENGINE

14. As already explained, four separate strokes of the piston, two outwards and two inwards, are required to complete a cycle in the cylinder of a four-stroke cycle engine. These four strokes are shown diagrammatically in Fig. 3, which presents four cross-sectional views, each showing the cylinder *a* and crank-case *b* cut at right angles to the crank-shaft *c*, exposing to view the piston *d*, connecting-rod *e*, inlet and exhaust valves *f* and *g*, and cams *h* and *i*. These views illustrate the various steps in the operation of the four-cycle type of automobile engine and the corresponding positions of the valves. The engine presented in the illustration does not represent any particular make but shows the principle on which all four-cycle gasoline engines are operated. If the different events here described are understood there will be no difficulty in comprehending the operation of any engine of this type.

15. The first stroke in the operation of the engine is shown in Fig. 3 (*a*). During this stroke the piston *d*, following the motion of the crank-shaft *c*, which is being propelled by the force of the preceding explosion, moves downwards as indicated by the arrows. At or slightly after the time that the piston starts on this stroke, the inlet valve *f* is opened by means of the cam *h*. The downward motion of the piston tends to produce a vacuum in the upper part of the cylinder, so that combustible mixture flows into the cylinder through the inlet port, as shown by the curved arrows, to fill up this vacuum, or, in other words, a charge is drawn into the cylinder. At the end of this stroke, or slightly after, the inlet valve closes. The exhaust valve *g* is kept closed during this stroke so that none of the entering charge can escape through the exhaust port. Because of the fact that the combustible mixture is drawn into the cylinder during this stroke, it is usually called the **suction stroke,** although it is also variously known as the *charging stroke*, *admission stroke*, *inlet stroke*, and *induction stroke*.

16. During the second stroke in the cycle of operations, the piston *d*, still driven by the crank-shaft *c*, moves upwards as

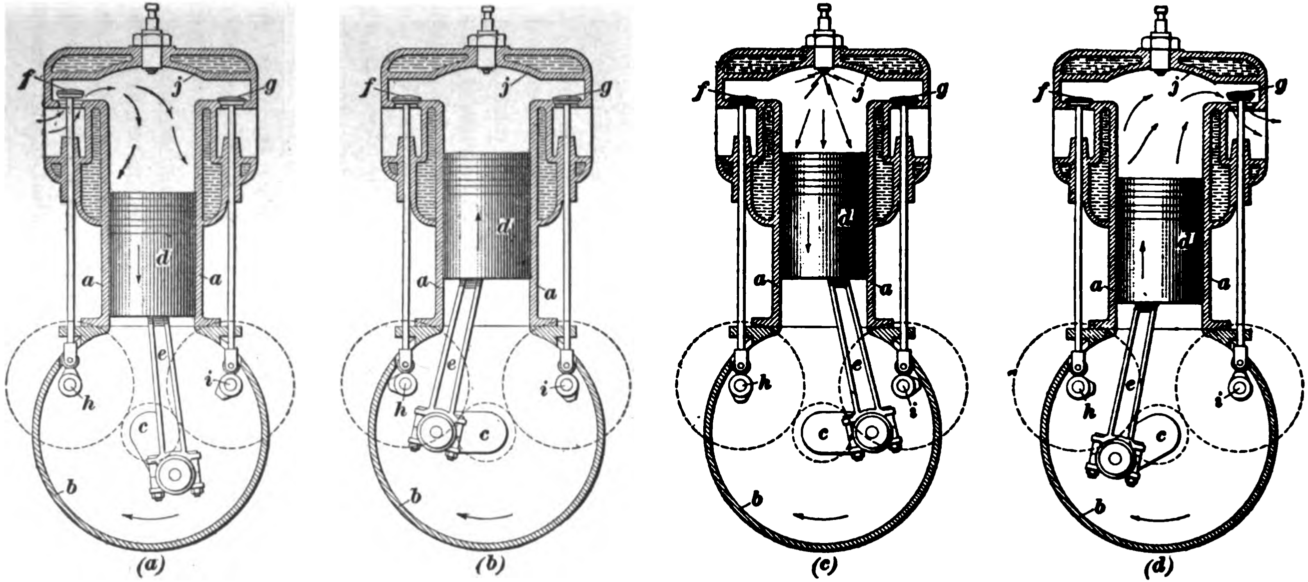

(a) (b) (c) (d)

FIG. 3

shown by the arrow in view (*b*). Both the inlet valve *f* and the exhaust valve *g* are closed during this stroke, so that the combustible mixture that was drawn into the cylinder on the suction stroke is now compressed into the small space between the top of the piston, when it is at the top of its stroke, and the cylinder head *j*. By thus compressing the charge into a small space before igniting it, a greater amount of power can be obtained from a given quantity of fuel as previously explained. About the time that this stroke, which is called the **compression stroke,** is completed, the charge is ignited by means of an electric spark.

17. The combustible mixture that was drawn into the cylinder on the first stroke of the piston and compressed on the second stroke is completely burned during the third stroke, when the piston is again on its downward movement, as shown in view (*c*). The combustion of the charge is so rapid during this stroke as to be practically instantaneous, and is usually called the ***explosion.*** The pressure in the cylinder, resulting from the explosion, drives the piston downwards and outwards, turning the crank-shaft by means of the connecting-rod and crank. Both valves remain closed from the beginning to nearly the end of this stroke. The exhaust valve *g* is opened by the cam *i* just before the end of the stroke and part of the burned gases escape into the air, so that the pressure in the cylinder falls nearly as low as that of the atmosphere. It is during this downward stroke of the piston that work is done and a forward impulse is given to the piston, so that it is called the **working stroke,** ***impulse stroke, explosion stroke,*** or ***combustion stroke.***

18. In view (*d*) the piston *d* is seen on the fourth and last stroke of the cycle. During this stroke it moves upwards, being driven by the crank-shaft, and expels the greater part of the remaining burned gases from the cylinder through the exhaust port. However, the combustion chamber, between the cylinder head and the face of the piston, when at the top of its stroke, remains filled with the burned gases at the completion of this stroke. The pressure of these residual gases is generally about the same as, or somewhat higher than; that of the external atmosphere. The inlet valve remains closed during this stroke and the exhaust valve remains open, it being closed about the time that the piston reaches the end of its stroke. This upward movement of the piston is known as the **exhaust stroke,** and its completion ends the cycle of operations. Following the exhaust stroke, the suction stroke again begins and the series of operations takes place over and over in exactly the same order.

19. Four-cycle automobile engines are classified as *poppet-valve engines* and *non-poppet-valve engines*, depending on the type of valve used for controlling the admission of fuel into the cylinder and the escape of burned gases therefrom.

Poppet-valve engines are those that make use of the so-called poppet type of valve such as shown in Figs. 2 and 3; **non-poppet-valve engines** are those that employ other types of valves for inlet and exhaust, such as sliding valves or rotary valves. Non-poppet-valve engines operate on exactly the same principle as the poppet-valve engine just described.

TWO-CYCLE PRINCIPLE

OPERATION OF TWO-PORT TWO-CYCLE ENGINE

20. The operation of the two-cycle engine differs from that of the four-cycle engine in that but two strokes of the piston, instead of four, are required to complete a cycle; or, in other words, each downward stroke of the piston is a power stroke. This cycle of operations is made possible by making use of an air-tight crank-case by means of which the charge is compressed slightly before being admitted to the cylinder, or by employing a pump or air compressor for this purpose, so that a separate suction stroke is unnecessary. In addition, the burned gases are expelled at the end of the working stroke, thus eliminating a separate exhaust stroke.

The principle of operation of the two-cycle engine is illustrated diagrammatically in Fig. 4, which shows three cross-sectional

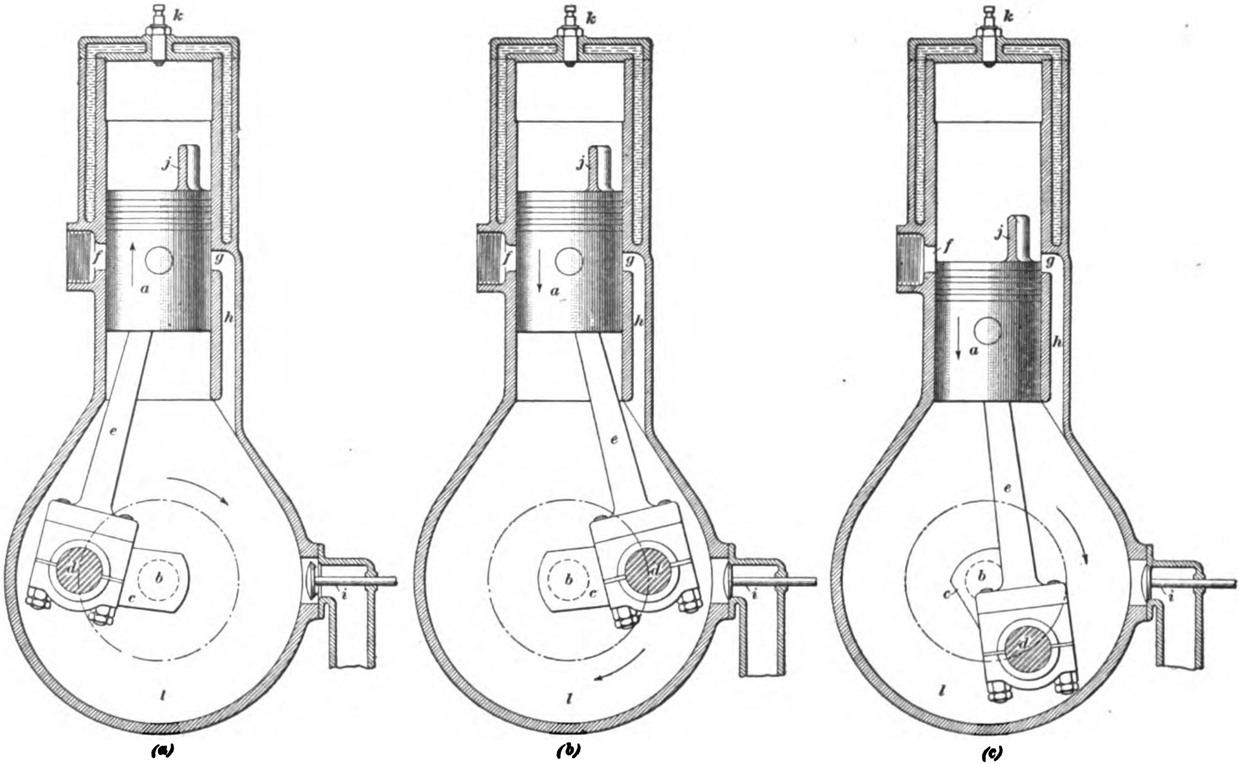

FIG. 4

views of what is known as a *two-port two-cycle* engine, so named because only two ports enter the bore of the cylinder, distinguishing it from the *three-port* engine, which has three ports opening directly into the cylinder. However, the principle on which the two types operate is exactly the same. Each view in the illustration shows the cylinder and crank-case cut in half, exposing to view the various parts of the engine and showing the different positions of the piston. At *a* is shown the piston; at *b*, the crank-shaft; at *c*, the crank; at *d*, the crankpin; at *e*, the connecting-rod; at *f*, the exhaust port; at *g*, the inlet, or transfer, port; at *h*, the transfer passage, or by-pass, leading from the crank-case to the cylinder; at *i*, the inlet valve in the crank-case; at *j*, a deflector, or baffle plate, on the end of the piston; at *k*, the spark plug at which the spark is produced; and at *l*, the crank-case.

21. In Fig. 4 (*a*) it may be assumed that the cylinder has been filled with a combustible mixture and the piston is compressing this charge during its inward stroke. At the same time, the partial vacuum created by the upward movement of the piston draws a fresh charge into the crank-case *l* through the inlet valve *i*. At about the end of this stroke the mixture of gasoline vapor and air, which has been compressed into the compression space at the top of the cylinder, is ignited by a spark formed at the spark plug *k*. This completes the first stroke of the cycle, which is called the compression stroke.

22. During the second stroke combustion takes place; that is, the charge in the cylinder is burned. The piston is forced downwards by the rapid expansion of the burned gases and a rotary motion is given to the crank-shaft by means of the connecting-rod and crank. The outward motion of the piston on this stroke slightly compresses the mixture in the crank-case *l*, the inlet valve *i* having been closed at about the end of the first, or inward, stroke. This downward movement of the piston, called the ***impulse stroke***, is illustrated in (*b*).

As the piston approaches the completion of the impulse stroke, it begins to uncover the exhaust port *f*. As soon as the edge of this port is uncovered, the burned gases in the cylinder begin to escape into the atmosphere. This escape is, or should be, rapid enough to allow the pressure in the cylinder to fall below that of the precompressed combustible mixture in the crank-case by the time the piston has moved out far enough to begin to uncover the transfer port *g*, through which a fresh charge then begins to enter the cylinder and to drive out the burned gases.

View (*c*) shows the burned gases escaping and a fresh charge being taken into the cylinder. The baffle plate *j* deflects the incoming charge, so as to prevent it from flowing out with the burned gases. The more or less complete expulsion of the burned gases and the drawing of a fresh combustible charge into the cylinder are accomplished during the time the piston is moving through a small portion of the latter part of the outward stroke and early part of the inward stroke. The ports are then closed by the piston during the early part of the inward stroke, after which the fresh charge is compressed in the combustion chamber, and more combustible mixture is drawn into the crank-case.

The inlet valve *i* opening into the crank-case may be operated either automatically by the suction of the piston or mechanically by means of a cam and push rod.

23. The series of operations taking place during the two-stroke cycle in the form of engine just described may be tabulated as follows:

TWO-STROKE CYCLE

Cylinder	Crank-Case
First Stroke, Inwards	
Compression; pressure rises; ignition near end of stroke, followed by explosion and rapid rise of pressure.	*Suction;* inlet valve open; pressure falls below atmosphere.
Second Stroke, Outwards	
Expansion; pressure falls; exhaust followed by entrance of fresh mixture from crank-case.	*Compression;* pressure rises to from 4 to 8 pounds; charging cylinder; pressure falls to atmospheric pressure.

OPERATION OF THREE-PORT TWO-CYCLE ENGINE

24. The three-port two-cycle type of automobile engine differs from the two-port two-cycle type in that the inlet port opens into the cylinder bore at a point near the crank-case and is opened and closed by the piston, instead of opening directly into the crank-case. This arrangement obviates the use of a valve of any kind, as the piston takes the place of valves, so that the engine is also known as a *valveless two-cycle engine*.

A three-port two-cycle engine is illustrated diagrammatically in Fig. 5, which is a cross-sectional view of a cylinder of an engine of this type and shows the location of the various ports. The inlet port is seen at *a*, the transfer port at *b*, and the exhaust port at *c*. In the position shown the piston *d* has just completed its downward, or power, stroke and a fresh charge is flowing from the crank-case *e* through the transfer passage *f* and transfer port *b* into the cylinder. The pressure of this incoming fresh charge helps to drive the products of combustion, or exhaust gases, out through the exhaust port *c*, as indicated by the curved arrows.

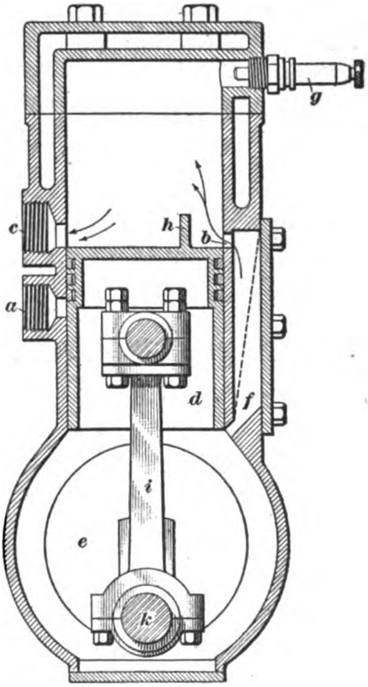

Fig. 5

25. The operation of the engine shown in Fig. 5 is as follows: Starting with the position shown, as the piston moves on its upward stroke the combustible mixture is compressed into the compression space in the upper part of the cylinder, and at the same time the inlet port *a* is uncovered by the piston so that a fresh charge is drawn into the crank-case by the suction of the piston. At about the end of this stroke the mixture in the upper part of the cylinder is fired by a spark produced at the spark plug *g* and the piston is driven downwards on its second, or impulse, stroke by the force of the resulting explosion. During this downward movement of the piston the fresh charge that had been drawn into the crank-case is slightly precompressed so that it will flow into the cylinder through the transfer passage *f* when the transfer port *b* is uncovered. As the piston nears the end of its impulse stroke the exhaust port and transfer port are uncovered, admitting the fresh charge into the cylinder and allowing the exhaust gases to escape into the atmosphere. At the end of the impulse stroke the conditions indicated in the illustration again exist and the cycle is completed. This cycle of operations is gone through again and again.

The raised portion *h* on the face of the piston acts as a deflector, or baffle plate, which prevents the fresh charge from escaping with the burned gases through the exhaust port. Other parts of the engine which are shown are the connecting-rod *i* and the crank-pin *k*.

TYPICAL AUTOMOBILE ENGINES

FOUR-CYCLE ENGINES

ARRANGEMENT OF ENGINE CYLINDERS

26. General Engine Construction and Control.—The typical automobile engine has four or six cylinders, is of the vertical four-cycle type, and runs at an average speed of about 1,500 revolutions per minute when at full speed. Except in rare cases the maximum speed is about 1,800 revolutions per minute. Automobile engines develop from 20 to 80 horsepower, depending on the size and number of cylinders. The engine is ordinarily governed by regulating the amount and quality of the charge that enters the cylinders, and by varying the time at which the mixture is fired. This is accomplished by the levers that are usually located on or near the steering wheel in front of the driver, although in some engines the time of ignition is varied by an automatic device, or governor, so that no hand spark lever is necessary. Some engines are also provided with an automatic governor by means of which the fuel supply is automatically regulated and the speed controlled within certain limits.

In a number of the earlier makes of automobiles, engines with a single cylinder or with two cylinders were used as a means of propulsion, but as the automobile industry developed, engines with a greater number of cylinders were required in order to secure the power and smooth running demanded in the modern pleasure car. As a result, the four- and six-cylinder four-cycle engines are used on practically all pleasure cars of today, and the single- and double-cylinder types are not being manufactured for this purpose, although a few of these engines are still in existence.

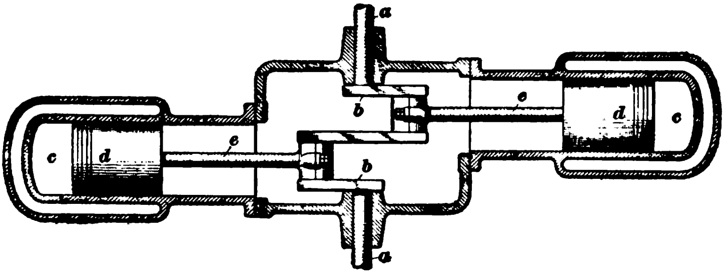

FIG. 6

27. Two-Cylinder Arrangement.—The most popular type of two-cylinder four-cycle automobile engine manufactured is known as the *double-opposed engine*, which has its cylinders arranged horizontally as shown in Fig. 6. The two cylinders *c* are placed on opposite sides of the crank-shaft *a*, and the cranks *b* are directly opposite each other. By this arrangement of cylinders, the explosions and consequent impulses on the piston occur every revolution, first in one cylinder and then in the other. While one of the pistons *d* is on its impulse stroke, the other is on its suction stroke.

Both pistons move toward the crank-shaft at the same instant and with the same speed; they also recede from the crank-shaft at the same time, each having the same speed of travel at any given instant. They are therefore balanced in their motion, except for a slight tendency to move sidewise because of the fact that they are not exactly opposite each other and the connecting-rods *e* are not exactly in line.

28. Although a few two-cylinder four-cycle automobile engines have been built with the cylinders arranged side by side on the same side of the crank-shaft, as shown in Fig. 7, these engines have not found general use in pleasure cars and are not now manufactured for that purpose. Such engines were usually made with the cranks *a*, Fig. 7, side by side so that the pistons *b* moved in unison. This arrangement secures an equal time interval of one revolution of the crank-shaft between the impulses; when one piston is moving down on its power stroke the other is moving down on its suction stroke, so that the impulses alternate, occurring first in one cylinder and then in the other. However, with the cranks arranged in this way it is extremely difficult to balance the moving parts so as to prevent serious vibration in the automobile. When the two cylinders are cast in one integral part, as shown in the illustration, they are called *twin cylinders*, and are said to be *en bloc*, which is a French expression for "in block."

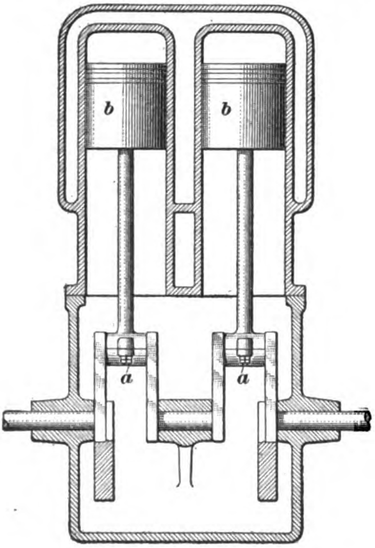

FIG. 7

29. Four-Cylinder Arrangement.—The four-cylinder four-cycle gasoline engine, which is the most widely used type of automobile engine, has its cylinders vertically arranged on one side of the crank-shaft. This arrangement is seen in Fig. 8, which is a diagrammatic illustration showing the cylinders cut in half and exposing to view the pistons *a*, the cranks *b*, and the connecting-rods *c*.

For each cylinder of a four-cylinder engine there is a corresponding crank; hence, in this engine there are four cranks, each one being part of the crank-shaft *d*, which is offset to form the cranks as shown. In order to secure a uniform application of power and smooth running of the engine, it is essential that the cranks be arranged around the crank-shaft in such a manner that no two pistons will be on their impulse strokes at the same time, but that the explosions in the various cylinders will occur in regular order with equal intervals of time between them. This result is obtained by placing the cranks so that the two end ones are on one side of the crank-shaft and directly opposite the two middle ones, which are on the other side of the crank-shaft. In other words, the cranks of a four-cylinder four-cycle engine are arranged so that when the two end ones stand vertically downwards, the two middle ones stand vertically upwards, as shown in Fig. 8. The two outer cranks are then said to be at an angle of 180° with the two inner ones.

30. Order of Explosions of Four-Cylinder Engines. With the cranks of a four-cylinder four-cycle engine arranged as shown in Fig. 8, two of the pistons will be descending while two are ascending. For instance, while the pistons in cylinders *1* and *4* are descending on their working and suction strokes, respectively, those in cylinders *2* and *3* are moving upwards on their compression and exhaust strokes. During the half of a revolution of the crank-shaft represented by these movements of the pistons, the explosion occurs in cylinder *1* and work is done in that cylinder. At the same time a charge is being compressed in cylinder *2*, so that during the following half revolution, the piston in cylinder *2* is on its working stroke, that in cylinder *3* is on its suction stroke, and those in cylinders *1* and *4* are moving upwards on their exhaust and compression strokes, respectively. During the third half revolution, the pistons in cylinders *1* and *4* again descend, this time, however, with that in cylinder *4* on its working stroke and that in cylinder *1* on its suction stroke; the pistons in cylinders *2* and *3* are at the same time ascending on their exhaust and compression strokes, respectively. On the fourth half revolution of the crank-shaft, when the pistons in cylinders *2* and *3* descend, that in *3* is on its working stroke, and that in *2* is on its suction stroke, while those in cylinders *1* and *4* move upwards on their compression and exhaust strokes, respectively. On the following strokes of the pistons an explosion will again occur in cylinder *1*, the cycle of operations in that cylinder having been completed, and the same order of events as just named is repeated as the crank-shaft revolves.

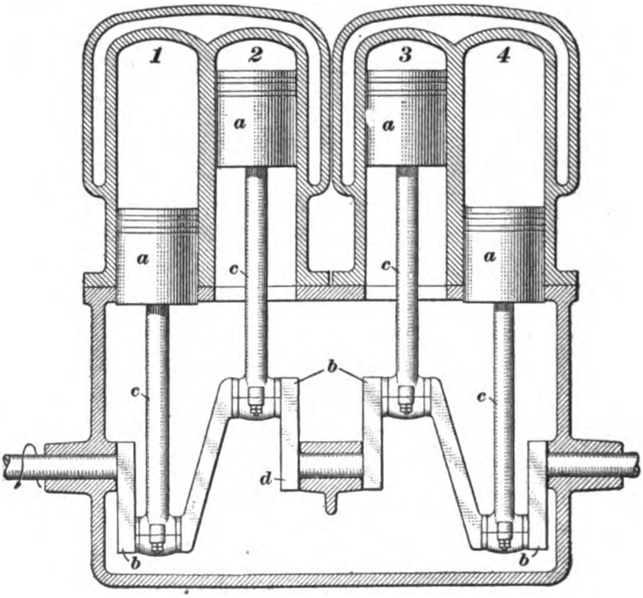

FIG. 8

31. In brief, the order in which the explosions, or impulses, take place in the various cylinders of a four-cylinder four-cycle automobile engine is as follows: Starting with cylinder *1*, an explosion first occurs in that cylinder, then one occurs in cylinder *2*, then in cylinder *4*, and finally in cylinder *3*. Two full revolutions of the crank-shaft are necessary in order to complete the various operations required to produce an explosion in each cylinder; hence, an impulse is given to the crank-shaft each half of a revolution. The order in which the impulses occur in the various cylinders is called the *order of explosions* or the *order of firing*. The order of firing just explained is said to be one, two, four, three, or more briefly, 1–2–4–3.

Since the pistons in cylinders *1* and *4* move together, or in unison, and those in cylinders *2* and *3* also move together, or in unison, in a four-cylinder four-cycle engine, it is evident that the events taking place in cylinders *1* and *4* may be reversed, or those taking place in *2* and *3* may be reversed, in which case the order of firing becomes one, three, four, two, or 1–3–4–2. The sequence of events may be traced out in the manner explained in Art. **30** by substituting cylinder *4* for cylinder *1*, or cylinder *2* for cylinder *3*, and vice versa.

The two orders of firing just named are used exclusively in four-cylinder four-cycle automobile engines. The order employed depends on the manner in which the valve cams are set to open and close the inlet and exhaust valves; naturally, the sequence in which the ignition spark is made to occur in the several cylinders must be the same as called for by the construction of the engine.

It is the usual practice to assign the number 1 to the cylinder nearest the front end of the car and to number those to the rear of it in succession 2, 3, etc.

32. Six-Cylinder Arrangement.—On account of their flexibility and smooth running qualities, automobile engines having six cylinders are used extensively, especially in the larger cars. The six-cylinder engines are much the same in form as the usual type of four-cylinder engines, the cylinders being arranged vertically in a row above the crank-shaft.

The cranks in a six-cylinder engine are arranged in pairs, that is, there are three pairs, each pair consisting of two cranks located on the same side of the crank-shaft and in the same plane. The two cranks of a pair may be either adjacent to each other or separated by other cranks placed between them. A common arrangement is shown in Fig. 9, which is a diagrammatic illustration showing the relative positions of the cranks and pistons. The cranks *a* and *f* form a pair, *b* and *e* form a pair, and *c* and *d* form a pair, the cranks of each pair being in line, as shown in view (*b*). As generally stated, the cranks of cylinders *1* and *6* form a pair, those of cylinders *2* and *5* form a pair, and those of cylinders *3* and *4* form a pair. The pairs are located at equal intervals around the crank-shaft, that is, at an angle of 120° with each other. The two pistons of each pair move in unison, that is, when one piston is on its up stroke, the other is also on its up stroke, and when one is on its down stroke, the other is also on its down stroke.

33. Order of Explosions of Six-Cylinder Engines. The impulses in the cylinders of a six-cylinder four-cycle automobile engine occur at intervals of one-third of a revolution; therefore, there are three impulses per revolution. Considering the cylinders as being in pairs corresponding to the three pairs of cranks, the explosions first occur in one cylinder of each pair and then in the other cylinder of each pair in the same order. A common firing order is 1–5–3–6–2–4. With this order, an explosion first occurs in cylinder *1*, then in cylinder *5*, then in cylinder *3*, after which the explosions occur in the other members of the pairs in the same order; that is, first in cylinder *6*, which completes a pair with cylinder *1*; then in cylinder *2*, which completes a pair with cylinder *5*; and finally in cylinder *4*, which is the mate to cylinder *3*.

Other orders of firing possible with the crank arrangement shown in Fig. 9 are: 1–2–3–6–5–4, 1–2–4–6–5–3, and 1–5–4–6–2–3. When cranks *3* and *4* and cranks *2* and *5* are interchanged, the following firing orders may be obtained: 1–3–2–6–4–5, 1–3–5–6–4–2, 1–4–5–6–3–2, and 1–4–2–6–3–5. In all of these firing orders, explosions occur first in any three cylinders belonging to different pairs and then in the other cylinders of the pairs taken in the same order. The various orders can be traced out just as in a four-cylinder engine by starting with the explosion stroke in cylinder *1* and the suction stroke in cylinder *6*, compression and exhaust occurring in the two cylinders forming the pair that is 120° behind cranks *1* and *6* and following out the events of the cycle in each cylinder.

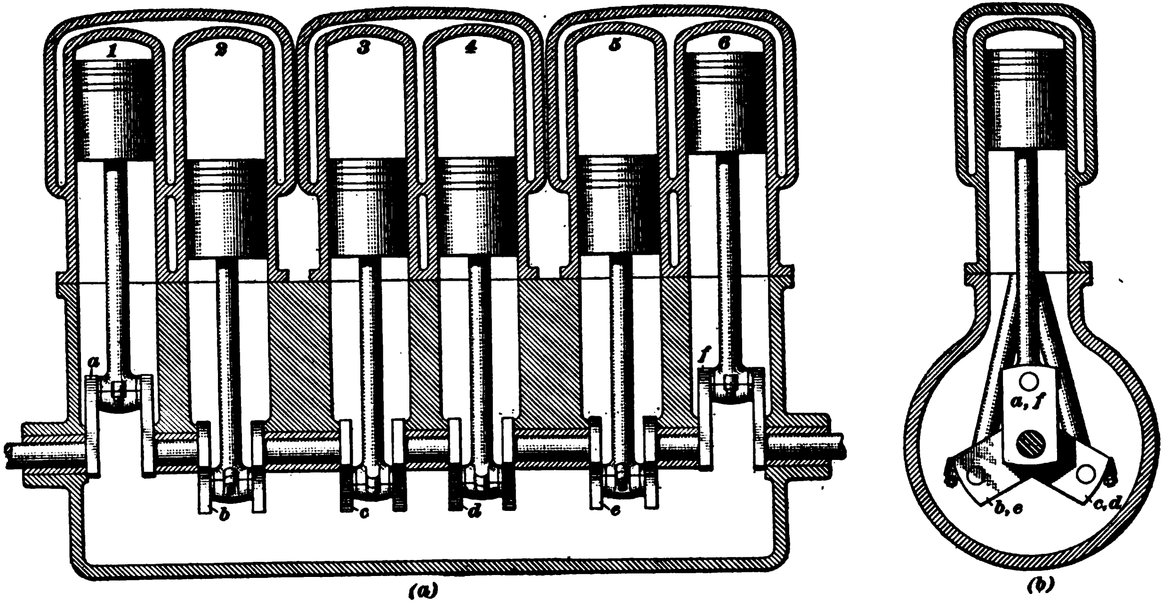

FIG. 9

In practice, the different firing orders are obtained by using different arrangements of the cams which open the inlet and exhaust valves, and employing ignition systems wired so that the electric spark is sent to the cylinders in the sequence desired.

TYPICAL FOUR-CYLINDER ENGINES

34. Types of Engines.—Four-cylinder four-cycle automobile engines may be said to be divided into three classes, depending on the manner in which the cylinders are assembled, namely: those having their cylinders cast separately; those having their cylinders cast in pairs; and those having their cylinders cast in one piece, that is, *en bloc*. Cylinders cast in pairs are the most widely used, although engines employing the block type of casting are rapidly increasing in number. Cylinders cast separately are decreasing in number. Engines with their cylinders cast *en bloc* have the advantage of being small and compact, and their various parts are always in alinement.

35. Cylinders Cast Separately.—An example of a four-cylinder four-cycle automobile engine with the cylinders cast separately is presented in Figs. 10 and 11, which show two views of the Overland model 71 engine. In Fig. 10 is seen a part longitudinal section and side view, and in Fig. 11 is shown a cross-section through one of the cylinders. In reading the description both illustrations should be referred to. Each of the four cylinders, *a*, *b*, *c*, and *d*, is a separate casting and is bolted separately to the crank-case *e*. Both the inlet and the exhaust valves are located on the same side of the engine, as shown at *f* and *g*, thereby permitting the use of a single cam-shaft *h* for operating both sets of valves. The cam-shaft is driven from the crank-shaft by means of gears enclosed in the casing *i*. At the forward end of the engine and driven from the crank-shaft by the belt *j* is a fan *k*, which is a part of the cooling system, and at the rear end is the flywheel *l*, inside of which is a clutch for connecting the engine to the driving mechanism of the automobile. The toothed wheel *m*

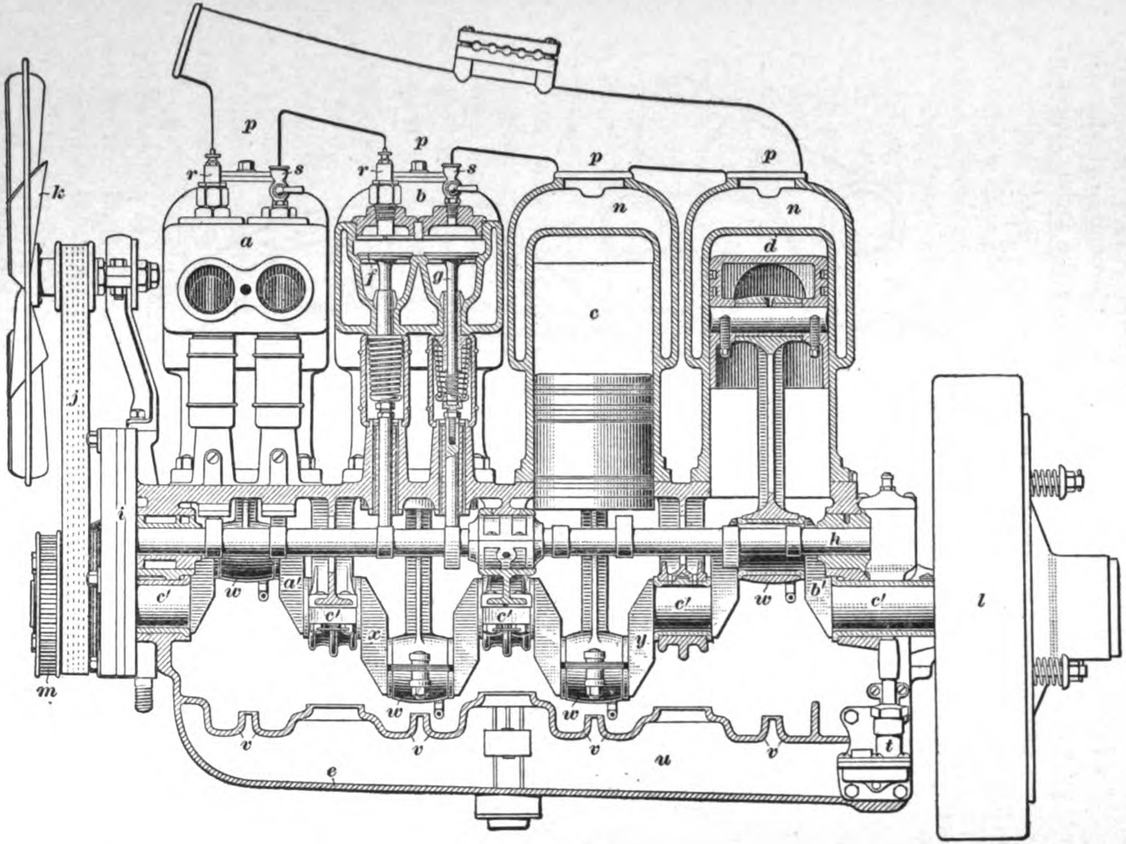

FIG. 10

accommodates a silent chain that turns a dynamo used for supplying current for electric lighting. The engine cylinders are cooled by means of water flowing through the jacket spaces *n*.

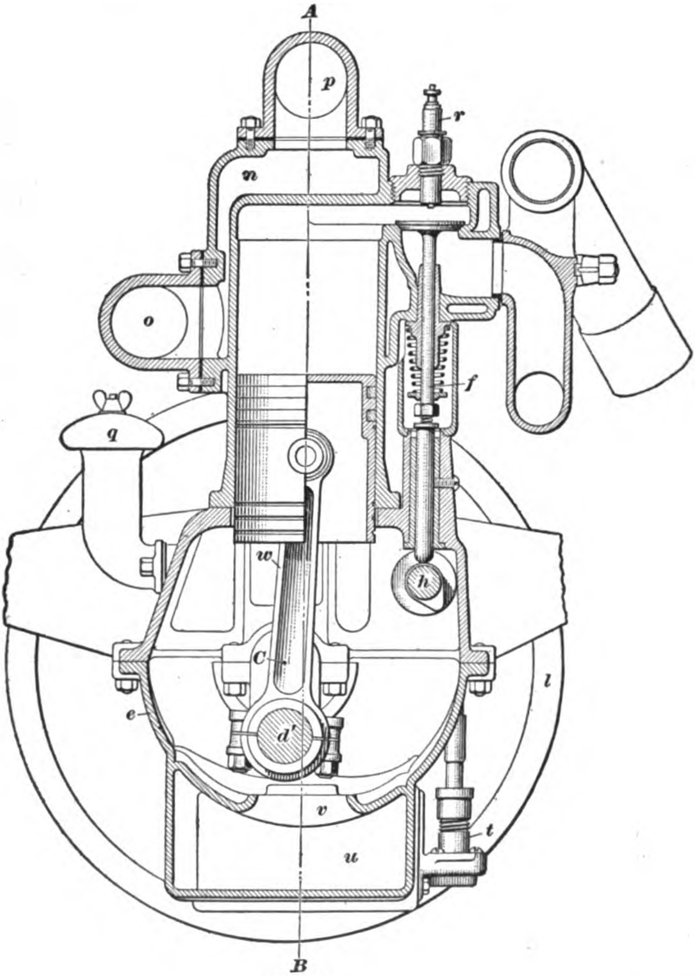

FIG. 11

The water enters the cylinder jackets at the inlets *o*, Fig. 11, and leaves them by way of the outlets *p*. At *q* in Fig. 11 is seen the *crank-case breather*, which is simply a pipe opening into the atmosphere to provide a way of escape for any hot gases going past the pistons. The breather pipe is also used as a filler pipe through which lubricating oil can be poured into the crank-case. The spark plugs *r* in this engine are located directly over the inlet valves, and the priming valves, or cups, *s* are located directly over the exhaust valves. An oil pump *t* forces the lubricating oil from a reservoir *u* in the bottom of the crank-case through certain pipes and into the troughs *v*, from which it is picked up by the ends of the connecting-rods *w*.

The cranks of the engine shown in Figs. 10 and 11 are arranged in the usual manner, that is, when the two middle cranks *x* and *y* stand vertically downwards, the two end cranks *a'* and *b'* stand vertically upwards. The operation of the engine is on the ordinary four-cycle principle, the explosions occurring in the order 1-3-4-2. The engine is supported in the frame of the automobile at two points near the rear end and at one point in front. This method of support is known as the *three-point suspension*. The advantage claimed for suspending the engine at three points is that it is not subjected to all of the torsional stresses set up in the frame by the car turning corners or traveling over rough places. In an engine with cylinders cast separately there are usually five crank-shaft bearings—one between each two cylinders, and one at each end, as seen at *c'*.

36. By referring to Fig. 11, it is seen that the center line *A B* of the cylinder does not pass through the center *C* of the crank-shaft; or, in other words, when the center of the crank-pin *d'* is at its lowest position it does not lie on the center line *A B* of the cylinders. Cylinders arranged in this manner are said to be *offset*.

The principal object of offsetting the cylinders of an automobile engine is to obtain a more nearly perpendicular pressure on the crank during the working stroke, and thus reduce the sidewise thrust of the piston against the cylinder wall and lessen the consequent wear.

37. Cylinders Cast in Pairs.—An external view of a four-cylinder four-cycle automobile engine having its cylinders cast in pairs is presented in Fig. 12, which shows the engine used on many Buick automobiles. A feature of this engine is that the inlet and exhaust valves are located in the cylinder heads and are operated from a single cam-shaft by means of rocker-arms and push rods. The cam-shaft is located on the right side of the engine, when viewed from the driver's seat in the car. The carbureter *a* and the inlet and exhaust manifolds *b* and *c*, respectively, are located on the left side. The air-circulating fan *d* is driven from the crank-shaft by the belt *e*. Each cylinder block, or casting, *f*, containing two cylinders, is bolted to the crank-case *g*, and the whole is supported on the frame of the car by the arms *h*, two of which are located on each side of the engine. The crank-case is provided with two breathers for allowing hot gases to escape.

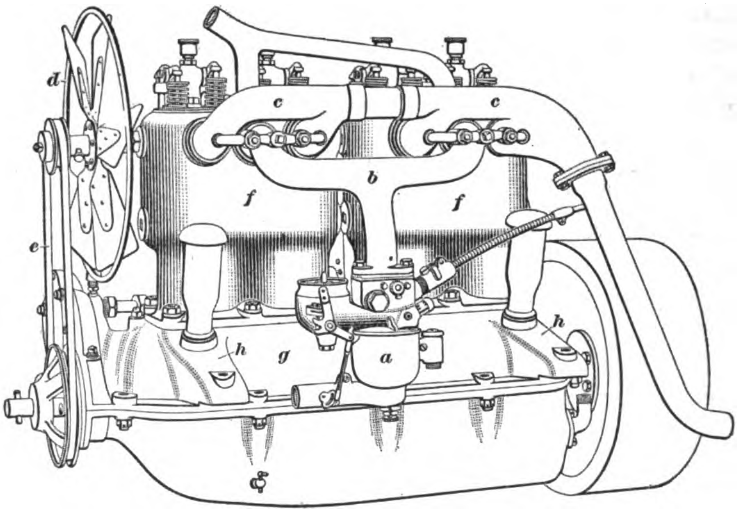

FIG. 12

38. A view of the right side of the Buick engine, part of which is shown in section, is presented in Fig. 13. On this side of the engine is located the cam-shaft *a*, which is driven from the crank-shaft *b* by the helical gears *c* and *d*. The shaft *e*, which drives the magneto and the water pump, is rotated at crank-shaft speed by means of the helical gear *f*, which meshes with the gear *d* on the cam-shaft. The magneto, which

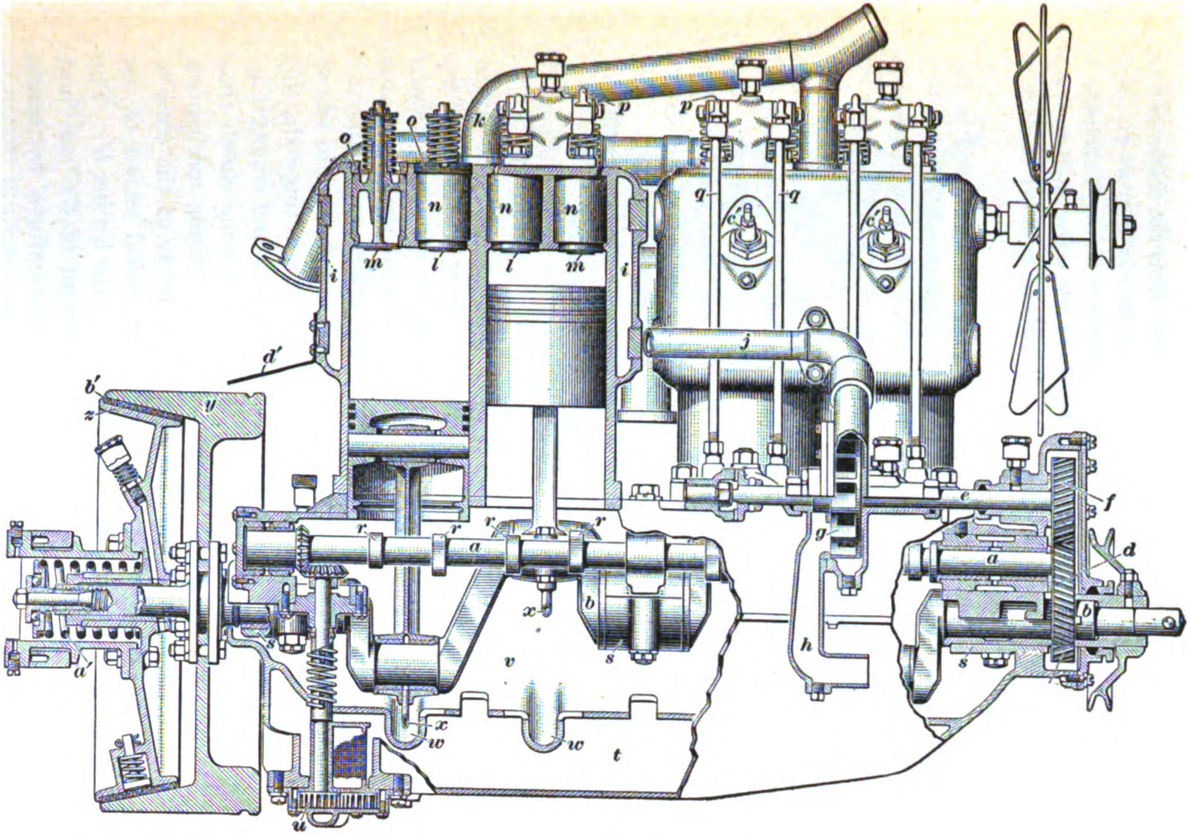

FIG. 13

is not shown in the illustration, is located near the center of the engine on the right side. The water pump is seen at *g*. The cooling water is circulated from the radiator through the pipe *h* to the pump and thence into the cylinder water-jackets *i* by way of the pipe *j*. From the water-jackets, it flows back into the radiator through the pipe *k*.

The inlet valves *l* and exhaust valves *m* are located in the cylinder heads. The inlet valves *l* are arranged side by side in each pair of cylinders, with an exhaust valve *m* on each side of them. The valves are assembled in *cages* *n*, which can be removed by unscrewing the caps *o*; the valves are operated by the rocker-arms *p* and the push rods *q*. The push rods are raised by the cams *r* on the cam-shaft, and their upward movement in turn raises one end of each rocker-arm. The other end of each rocker presses against the top of a valve stem, hence each upward movement of a push rod forces the corresponding valve open against the pressure of its spring. The valves in this engine are timed so as to give a firing order of 1-3-4-2.

The crank-shaft *b* is of the three-bearing type; that is, it turns in a bearing *s* at each end and one in the middle. The crank-case is divided into two compartments. The lower compartment *t* serves as an oil reservoir from which the lubricating oil is circulated throughout the oiling system by means of a gear-pump *u*, which is driven from the crank-shaft by means of bevel gears and a vertical shaft. The upper compartment *v* is the crank-case proper and contains oil troughs *w* into which the scoops *x*, on the lower ends of the connecting-rods, dip and gather up oil for lubricating the cylinders and connecting-rod bearings. In the broad flywheel *y* is a cone clutch that connects or disconnects the engine from the driving mechanism of the car when desired. The clutch consists of the cone *z*, which is normally held against the inner conical surface of the flywheel by the spring *a′* and is faced with the leather *b′*. The cone *z* is coupled to the driving mechanism of the car, and the clutch is disengaged by compressing the spring *a′* by means of a foot-pedal, thus separating the outer surface of the cone from the inner surface of the flywheel.

The spark plugs in this engine are located along the side of the cylinders, as seen at c'. A pointer d', fixed to the rear cylinder, indicates by means of marks on the flywheel rim the time at which the valves should be opened and closed, and the positions of the dead center of the cranks.

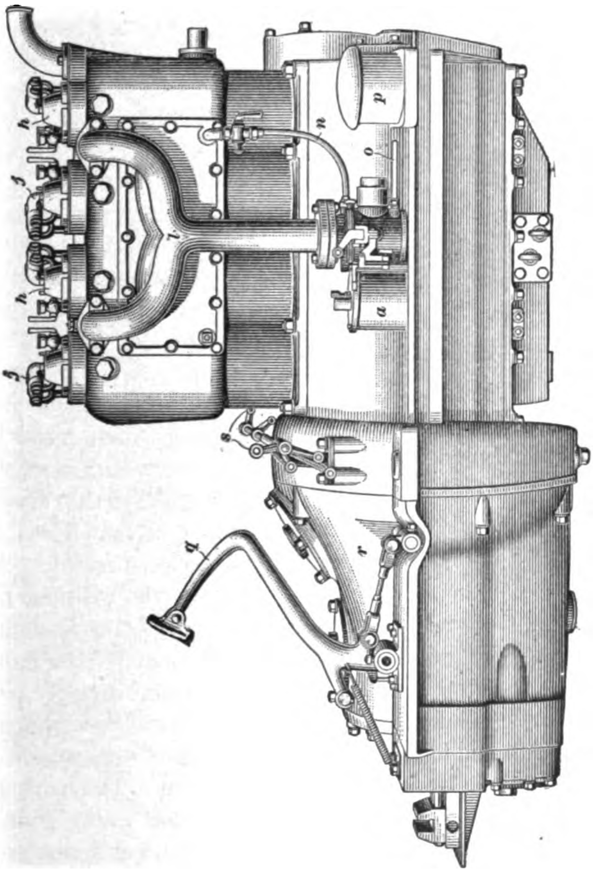

FIG. 14

39. Cylinders Cast En Bloc.—Fig. 14 is a view of the inlet side of the Chalmers "Thirty-six" motor, which is an example of a four-cylinder four-cycle engine having its cylinders cast *en bloc*. A front-end view of the same engine is shown in

Fig. 15. The carbureter *a* is located on the right side of the engine and the magneto *b* and water pump *c* on the left side. In the end view, Fig. 15, is seen the arrangement of the gears by means of which the cam-shaft and magneto shaft are driven. The diameter of the gear *d* on the cam-shaft is twice that of the gear *e* on the crank-shaft, and the diameter of the gear *f* on the magneto shaft is the same as that of the gear *e*. This arrangement gives the gear ratios required to drive the cam-shaft at one-half crank-shaft speed, and the magneto shaft at crank-shaft speed. The gear *g* is an idler gear and is used simply to connect the gears *d* and *e*. It has no effect on the gear ratio but causes the cam-shaft to be rotated in the same direction as the crank-shaft. In some engines the crank-shaft gear meshes directly with the cam-shaft gear, and the two shafts rotate in opposite directions. The cam-shaft may rotate in either direction, provided the cams are designed so that they will work properly in that direction.

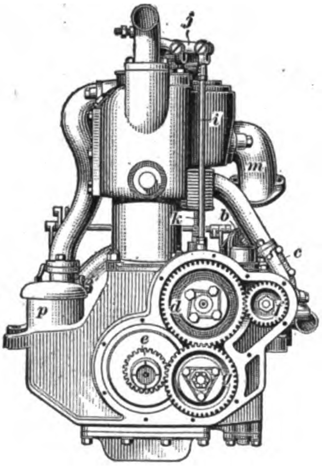

Fig. 15

In this engine, the inlet valves are located in the cylinder heads under the caps *h*, and are operated from the cam-shaft by means of the push rods *i* and the rocker-arms *j*; the exhaust valves are located on one side and are operated directly by the push rods *k*. The inlet manifold *l*, leading from the carbureter *a* to the intake passages, is on the right side of the engine, and the exhaust manifold *m* is on the left side. The carbureter employed on this engine is warmed by hot water from the cylinder jacket; the water flows through a jacket space around the carbureter, entering it by the pipe *n* and leaving by the pipe *o*, which leads into the cooling system near the pump. A breather pipe, which is also used as an oil funnel, is seen at *p*. The foot-pedal *q* operates the clutch, which is contained in the case *r*, and the levers *s* are part of the connections running from

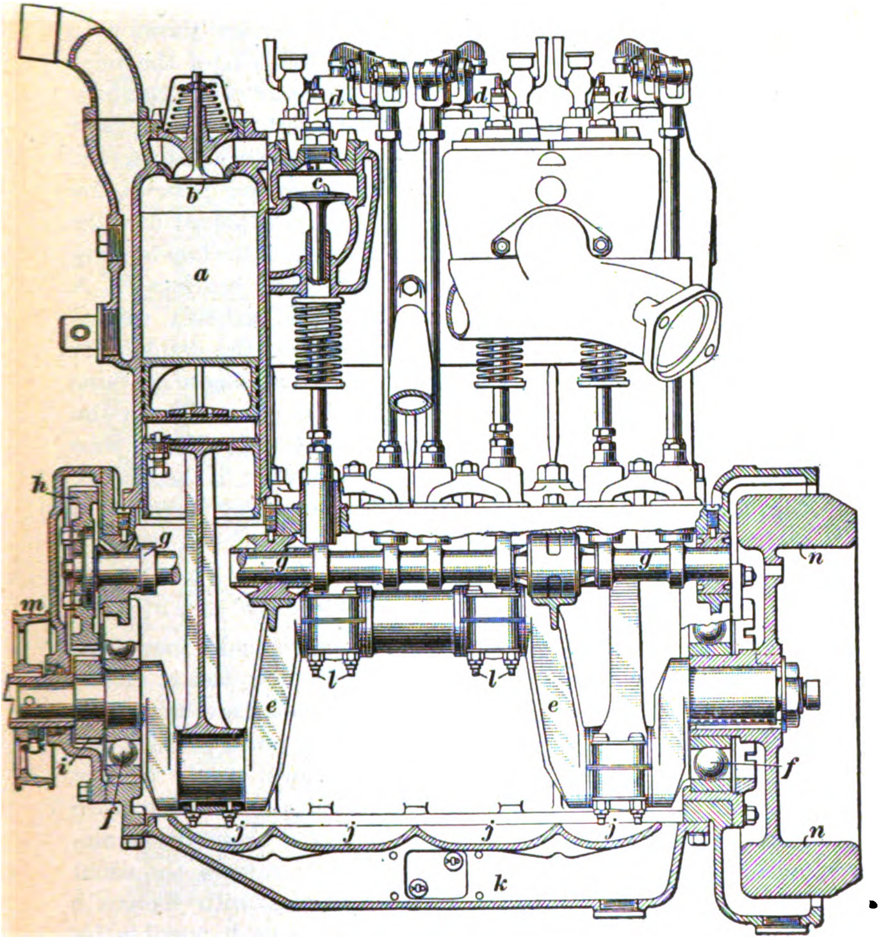

FIG. 16

the hand spark lever on the steering column to the spark-timing device on the magneto.

40. A part longitudinal section of the Chalmers four-cylinder engine is presented in Fig. 16. The view shows at *a* the inside of the first cylinder and the location of the inlet valve *b*, which opens downwards into the center of the combustion chamber. In the second cylinder, part of the exhaust valve chamber is cut away, exposing to view the exhaust valve *c*, which opens upwards into the side, or projecting part, of the combustion chamber. The spark plugs *d* are placed directly over the exhaust valves. The crank-shaft *e* is of the two-bearing type and is supported at its ends by the ball bearings *f*. A single cam-shaft *g* operates both inlet and exhaust valves, two of the gears by which it is driven from the crank-shaft being shown at *h* and *i*. The bottom of the crank-case contains four troughs *j* into which lubricating oil is pumped from the oil reservoir *k*. The ends *l* of the connecting-rods dip into these troughs and splash the oil over the interior of the engine, thus lubricating the moving parts. The fan pulley is seen at *m* and the flywheel at *n*.

TYPICAL SIX-CYLINDER ENGINES

41. Cylinders Cast Separately.—Six-cylinder four-cycle automobile engines usually have their cylinders cast in blocks of two or more, although in a few the cylinders are cast separately. An example of the latter method of construction is the Franklin six-cylinder air-cooled engine shown partly in side view and partly in section in Fig. 17. The distinguishing feature of this engine is that its cylinders are cooled by means of air-currents flowing over them instead of by means of the usual water-jacket. The cylinders *a* are provided with flanges *b* that increase their radiating surface and make it possible for the cool air flowing around them to carry off enough heat to sufficiently cool the cylinders.

Both the inlet valves and the exhaust valves are located in the cylinder heads, as shown in the first cylinder, in which *c* is the inlet valve and *d* the exhaust valve. The valves are

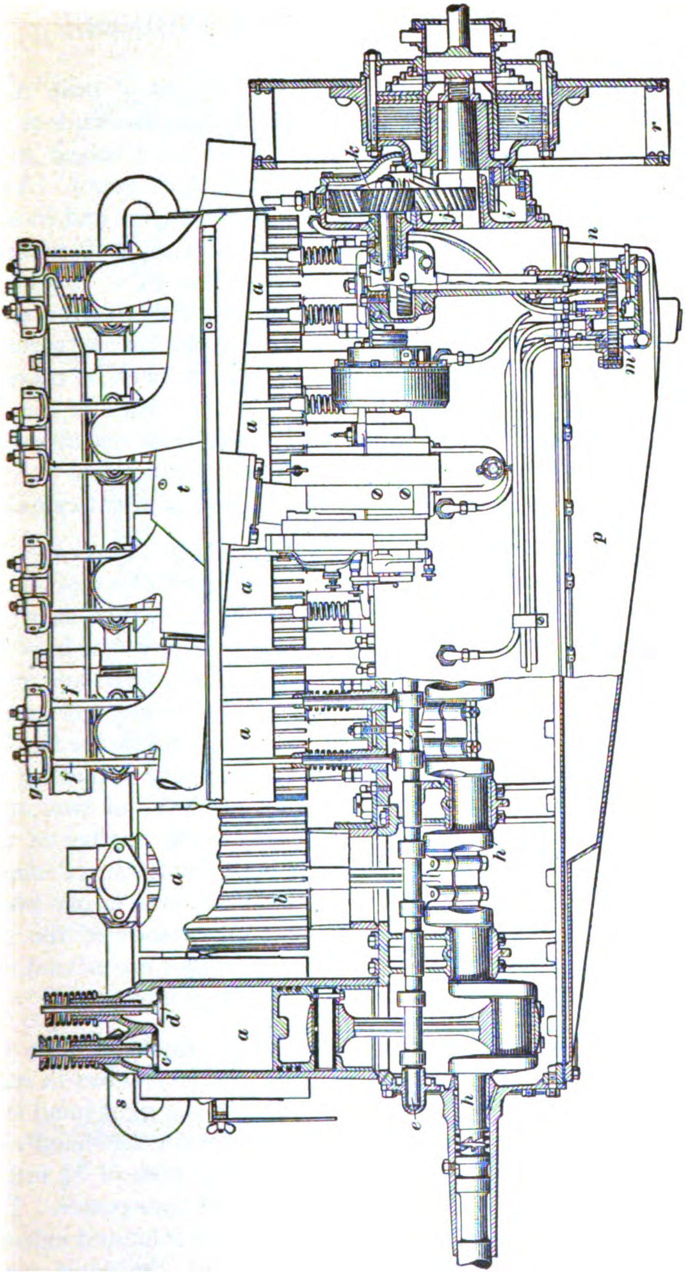

FIG. 17

operated from a single cam-shaft *e* by means of push rods *f* and rockers *g*. The cam-shaft is driven from the crank-shaft *h* by means of the helical gears *i* and *j*. A third helical gear *k* drives the magneto shaft *l* from the cam-shaft gear *j*. An oil pump *m* is located on the same side of the engine and receives its power from the cam-shaft through a vertical shaft *n* that is driven by helical gears, one of which is seen at *o*. By means of this pump, the lubricating oil is pumped from the reservoir *p* through the lubricating system to the various bearing surfaces. A multiple disk clutch *q*, enclosed in the flywheel *r*, connects the engine crank-shaft with the driving mechanism of the car. The inlet manifold is seen at *s* and the exhaust manifold at *t*. The crank-shaft *h* is supported by seven bearings, one at each end of the engine and one between each two adjacent cylinders.

42. Cylinders Cast in Pairs and in Threes.—The most common method of grouping the cylinders of a six-cylinder four-cycle automobile engine is in blocks of two, as shown in Fig. 1. The advantage of this construction over that in which the cylinders are cast separately is that a shorter and more compact engine is obtained and a smaller number of crank-shaft bearings are necessary. On the other hand, as the number of cylinders in one block increases, the difficulty of making the casting also increases. Cylinders cast in blocks of two, or in pairs, are comparatively easy to make; hence, engines of this type have certain advantages, from the manufacturers' standpoint, over engines with all of the cylinders cast in one piece. However, the compactness and neat appearance of the six-cylinder engine with the cylinders cast *en bloc*, are advantages that are bringing this type of motor rapidly into use.

43. A number of six-cylinder engines are built with the cylinders grouped in two blocks having three cylinders in each block, as shown in Figs. 18 and 19. Fig. 18 is a right-hand side view of the Lozier "Light Six," and Fig. 19 is a left-hand side view of the same engine. The engine has a bore of 3⅝ inches and a stroke of 5½ inches and is rated at 36 horsepower. The two blocks are seen at *a* and *b*, Fig. 18. The inlet and exhaust valves are located on this side of the engine, the valve stems

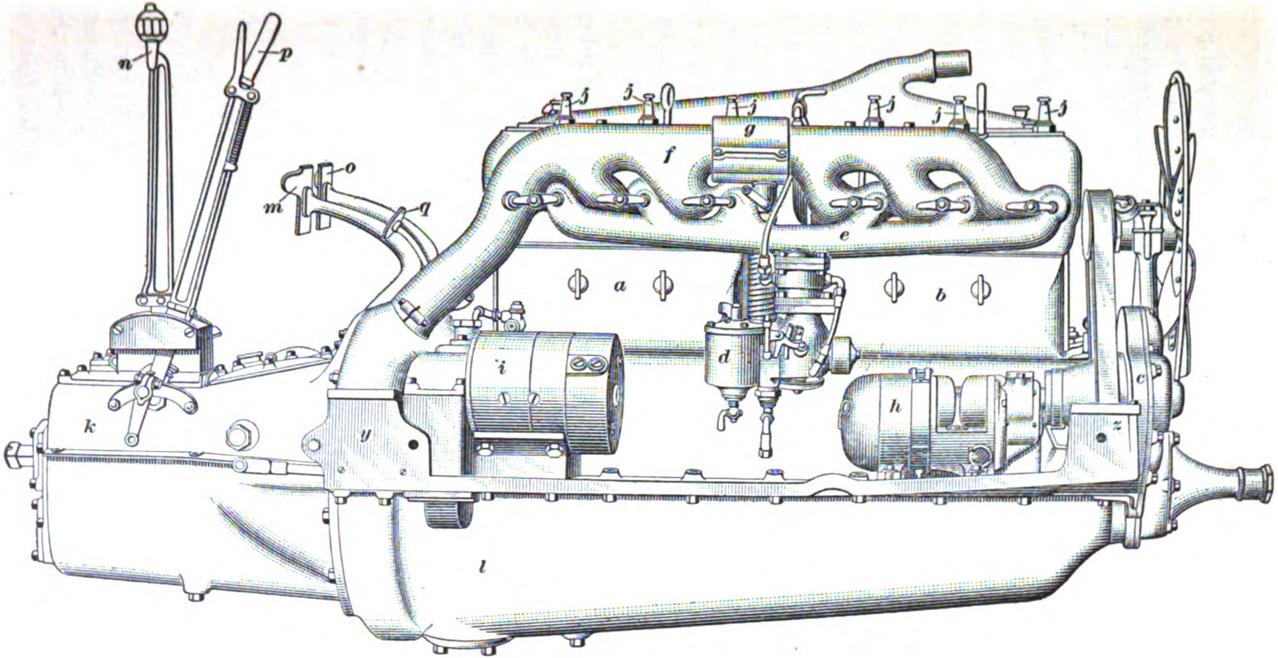

FIG. 18

and springs being enclosed. The valves are operated from a single cam-shaft that is driven from the crank-shaft by means of gears contained in the casing *c*. The fuel enters the cylinders from the carbureter *d* by way of the intake manifold *e*, and the exhaust gases escape through the exhaust manifold *f*. At *g* is a sleeve that surrounds the exhaust pipe and is connected to the carbureter for the purpose of supplying warm air to aid in evaporating the gasoline. The dynamo *h* supplies electricity for the electric lights on the car, and the electric starting device *i* automatically cranks the engine when starting. The spark plugs *j* are located over the inlet valves. The clutch and transmission gears are located in the casing *k*, which is rigidly bolted to the engine crank-case *l*, thus forming a unit power plant. The clutch is operated by the foot-pedal *m* and the transmission gears by the hand-lever *n*. The foot-pedal *o* and the hand-lever *p* are for operating the service and emergency brakes, respectively. The foot-pedal *q* is the accelerator pedal, which is used for opening the throttle valve in the carbureter by foot pressure.

44. The water pump *r* and the magneto *s* are located on the left-hand side of the engine, as shown in Fig. 19. Both are driven by the shaft *t*, which in turn is driven from the crank-shaft through the gears contained in the casing *c*. The water circulation is from the pump *r* through the pipe *u* to each casting, thence to the radiator by way of the connection *v*, and back to the pump through a pipe not shown. The breather pipe *w* allows the escape of hot gases from the crank-case and affords a means of pouring oil into the oil reservoir in the bottom of the crank-case. An oil-level gauge is located at *x*. The power plant is supported in the frame of the car by the four arms *y* and *z*, two on each side.

45. Cylinders Cast En Bloc.—Fig. 20 shows the outside appearance of the Studebaker six-cylinder engine. All the cylinders are cast in one piece *a* and the valve stems and springs are completely enclosed, giving the engine a very compact and clean-cut appearance. All of the valves are located on the left side of the motor, which is the side shown, and the inlet valves

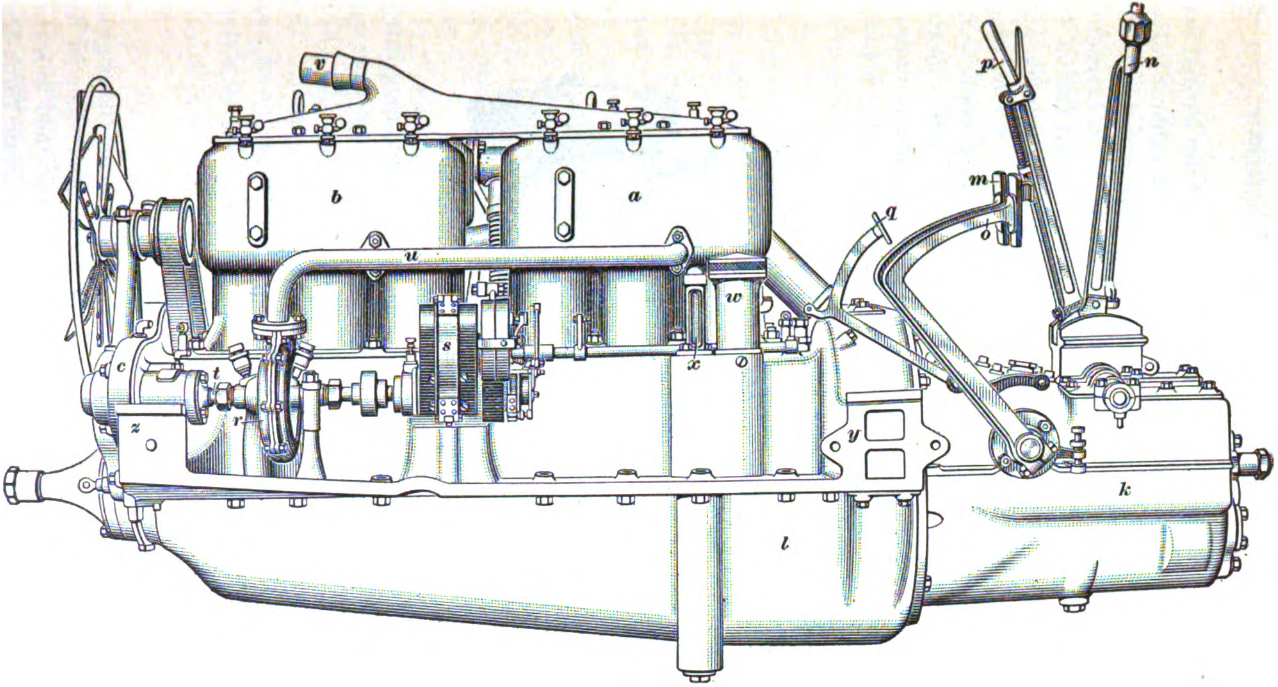

Fig. 19

are adjacent to each other. The spark plugs *b* are located over the inlet valves, and the priming cups *c* over the exhaust valves. The carbureter is on the right side of the engine and the exhaust pipe *d* is on the left. A feature of this engine is the location of the water pump *e*, which is placed at the forward end of the cylinders and pumps water into the cylinder jackets in line with the valves. The pump receives its power from a cross-shaft that is driven by a worm-gear from the engine crank-shaft. The magneto is also driven by this cross-shaft, and is located on the opposite side of the engine. The cooling water is returned to the radiator through the pipe *f*. The crank-case *g* is made bottomless and a pressed-steel oil reservoir *h* containing lubricating oil is bolted to it. The amount of oil in the reservoir may be ascertained at any time by means of the gauge *i*. Oil is poured into the crank-case through the breather pipe *j*. The engine is supported in the frame of the car by means of four supports, two of which are located on each side, as shown at *k* and *l*.

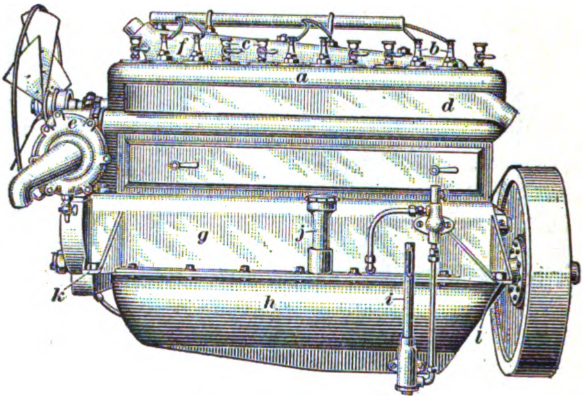

Fig. 20

UNIT POWER PLANT

46. In general, there are two methods of placing the engine, clutch, and transmission gears in relation to each other in an automobile chassis. First, the transmission gears, and in some instances, also the clutch, may be entirely separate from the engine and be either contained in a separate casing or form part of the rear axle; and second, the three units may be enclosed in a single rigid casing, forming the **unit power plant** type of construction. In the first method, the change-speed gears are connected to the engine by a shaft fitted with either one or two universal joints to give flexibility and thus relieve the parts of the stresses that otherwise would be thrown on them in passing over rough, uneven roads. In the unit power plant, the parts are held rigidly in alinement by means of the casing.

47. An example of a unit power plant is presented in Fig. 21, in which (*a*) is a side view and part longitudinal section and (*b*) is a top view of the Model 31 unit power plant manufactured by the Northway Manufacturing Company. The transmission housing *a* is bolted to the engine casing *b* so as to form a single rigid casing in which the engine, clutch, and transmission are enclosed.

The engine is of the six-cylinder type, with its cylinders cast in pairs, and all the valves *c* and *d* are located on the left side and operated from a single cam-shaft *e*. A feature of this engine is that the cam-shaft *e* and pump shaft *f* are driven from the crank-shaft by means of a silent chain, represented by the dotted lines *g*. This aids in making the engine run quietly. The clutch is located inside of the flywheel *h* and is of the cone type.

The chief advantages claimed for the unit power plant are that the unit casing keeps the oil in and the dust out and that every part is held in absolute and undisturbed alinement under all conditions. Another advantage is that it permits the power plant to be assembled as a whole and put into position without fitting it into place. A disadvantage is that with the unit construction, it is sometimes difficult to remove one part without first removing many other parts.

ENGINE SUSPENSION

48. An automobile engine may be suspended from the frame of the car by either one of two methods, namely, by **three-point suspension,** or by **four-point suspension.** With the three-point method of support, the power plant is carried by two rigid supports at one end and by a single pivotal support at the other. In some cars the power plant is suspended in front from the main frame or the subframe by two arms, and in the rear from a cross-member of the frame by a single pivotal joint; in other cars the two supports are at the rear and the single support in front. For example, the unit power plant illustrated in Fig. 21 is suspended in this manner. The rear of the power plant is carried by two arms *i* and *j*, view (*b*), which rest on longitudinal members of the frame, and the forward end is carried by the support *k*. The front support *k* is in the form of a bearing that is bolted to the cross-member of the frame and carries the forward end of the engine through the part *l*, which extends into *k*. The part *l* is free to turn in the support *k*, and hence any twisting motion that is given to the power plant through the arms *i* and *j* does not tend to distort the engine and throw it out of alinement, but merely turns the entire power plant in the bearing *k*.

In the four-point suspension, the engine or power plant is supported by the frame of the car at four points. Four arms or supports extend from the power plant casing or from the crank-case to the side members of the frame to which they are rigidly attached. The engine and transmission may each be supported or carried separately in their own casings, or they may be combined into a unit power plant and the whole carried at four points. A good example of four-point suspension is the engine shown in Fig. 12, which is carried on the side members of the frame by two arms *h* on each side of the crank-case.

49. Each method of supporting the power plant of an automobile has certain advantages peculiar to itself. The advantage claimed for the three-point suspension is that it prevents twisting stresses from being transferred from the frame of the car to the engine, thus throwing the moving parts out of alinement. On the other hand, it is claimed by the adherents of the four-point method of suspension that, although the three-point suspension is theoretically correct, from a practical standpoint the four-point suspension is the more satisfactory.

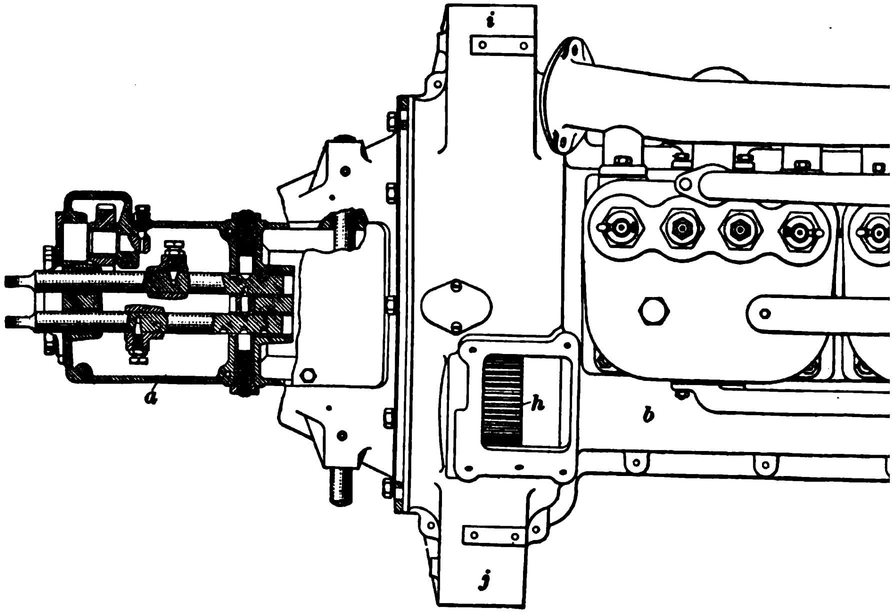
i
d
h
b
j

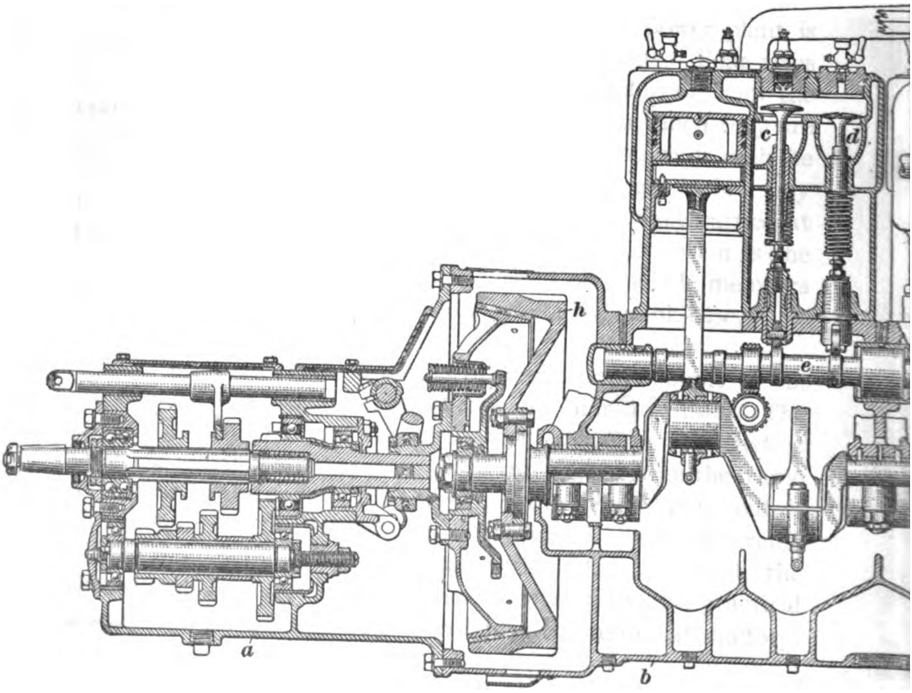
c
d
h
e
a
b

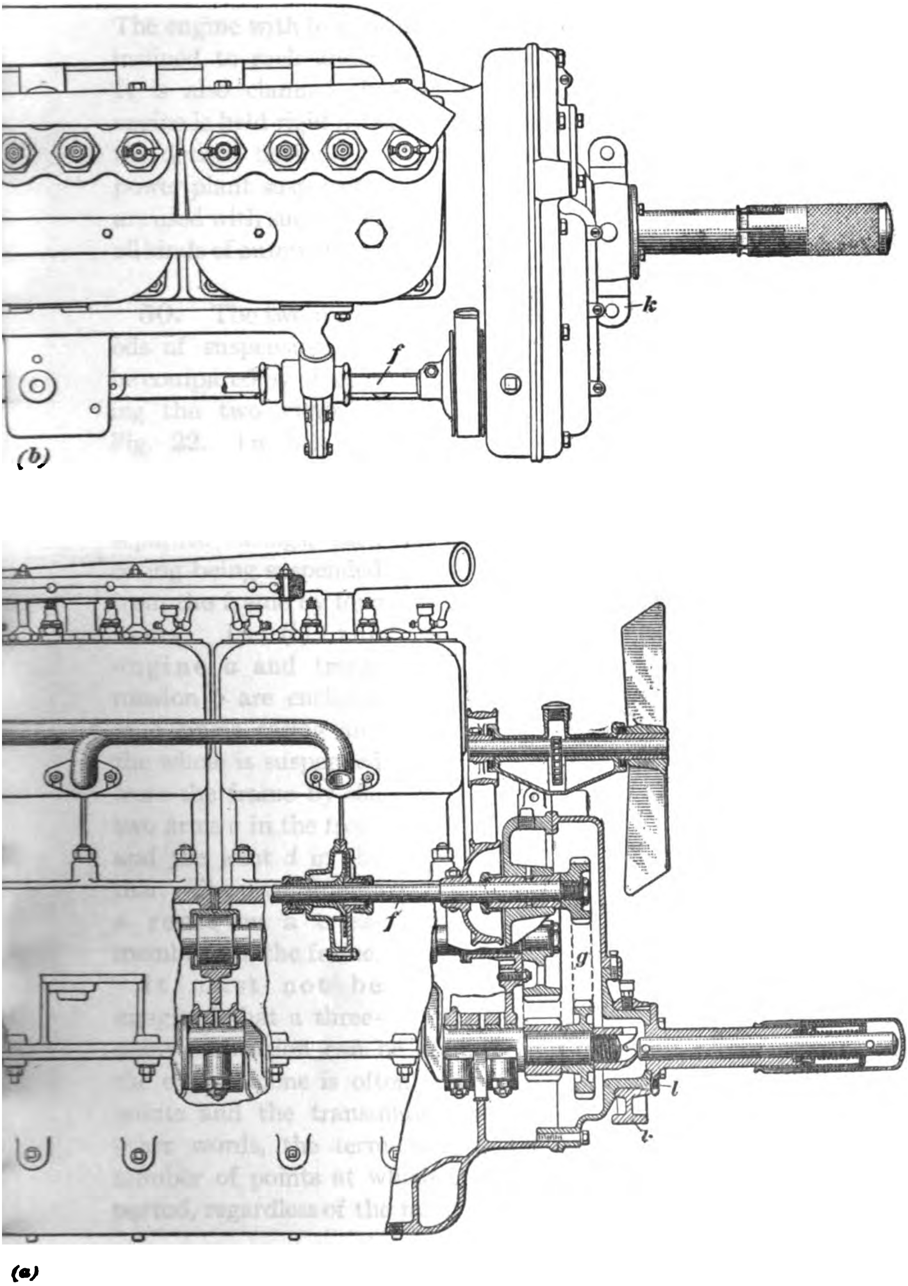

FIG. 21

The engine with four points of suspension is more stable and less inclined to rock under heavy loads under varying conditions. It is also claimed that with the four-point suspension, the engine is held rigid by means of its supports and the frame gives the desired flexibility. As a matter of fact, both methods of power plant suspension are used with success on all kinds of automobiles.

50. The two methods of suspension can be compared by observing the two views of Fig. 22. In (*a*) the engine *a* and the transmission *b* are located in separate casings, each casing being suspended from the frame by four arms. In (*b*) the engine *a* and transmission *b* are enclosed in a single casing and the whole is suspended from the frame by the two arms *c* in the front and the joint *d* in the rear. The pivotal joint *d* rests on a cross-member *e* of the frame.

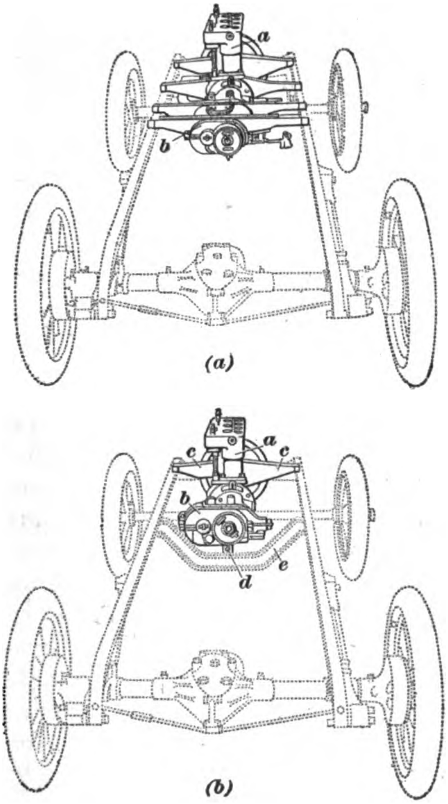

Fig. 22

It must not be imagined that a three-point suspension can be applied only to a unit power plant; the engine alone is often suspended from the frame on three points and the transmission carried as a separate unit. In other words, the term three-point suspension refers to the number of points at which the engine or power plant is supported, regardless of the manner in which the engine is encased.

TWO-CYCLE ENGINES

ARRANGEMENT OF TWO-CYCLE ENGINE CYLINDERS

51. A two-cylinder two-cycle engine usually has its cylinders arranged side by side, as in Fig. 23, and the cranks at an angle of 180° apart, or directly opposite each other. In other words, while one piston is moving downwards on its impulse stroke the other is moving upwards on its compression stroke, so that the explosions alternate, occurring first in one cylinder and then in the other. By this arrangement an impulse occurs every half revolution, and the moving parts are well balanced.

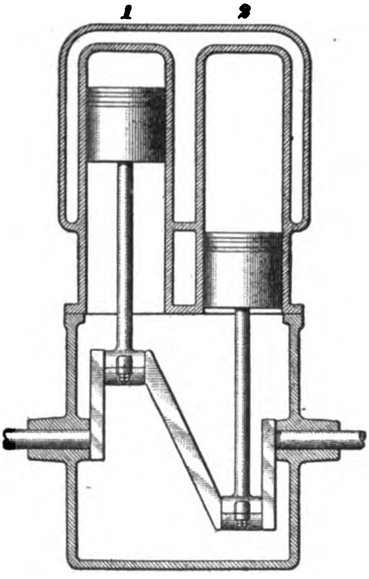

FIG. 23

52. Three-cylinder two-cycle engines are generally arranged as shown in Fig. 24. The cranks are 120° apart, that is, they are arranged at equal distances around the crank-shaft, so that the impulses occur every third of a revolution. With this arrangement and starting with the first cylinder, an explosion occurs first in cylinder *1*, then in cylinder *3*, and lastly in cylinder *2*, or, in other words, the order of firing in such an engine is 1–3–2.

53. In four-cylinder two-cycle engines all the cylinders are generally in line on one side of the crank-shaft, as seen in Fig. 25. The cranks are arranged 90° apart, hence in such an engine four impulses occur at equal time intervals for each revolution of the crank-shaft. In order to balance each other and thus prevent any great vibration, the cranks are arranged

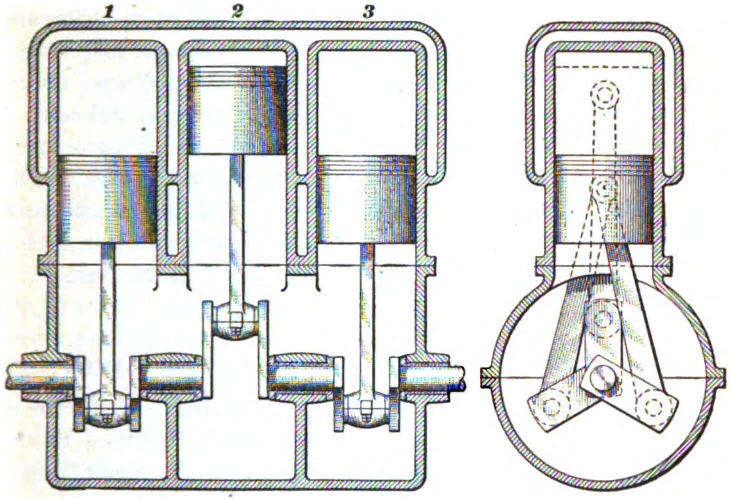

FIG. 24

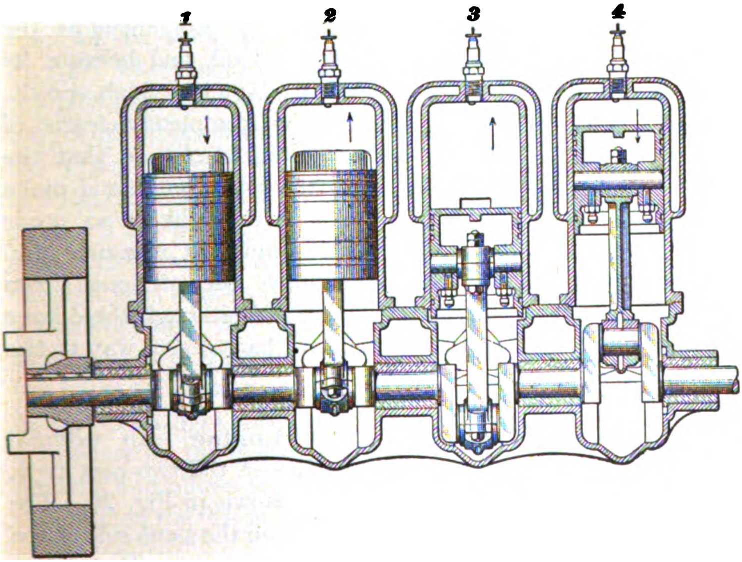

FIG. 25

so that cranks *1* and *2* are directly opposite each other and cranks *3* and *4* are directly opposite each other, as seen in the illustration. Beginning with cylinder *1*, an explosion occurs first in that cylinder, then in cylinder *4*, then in cylinder *2*, and finally in cylinder *3*; or, in other words, the firing order is 1-4-2-3. The arrows in the illustration show the direction in which the different pistons are moving, and the numbers at the top indicate the usual numbering of the cylinders, No. 1 being at the front end of the engine and No. 4 at the rear.

EXAMPLES OF TWO-CYCLE AUTOMOBILE ENGINES

54. Application of Two-Cycle Principle.—The use of the two-cycle automobile engine is practically confined to the high-wheel type of motor vehicle known as the *motor buggy*, so named from its resemblance to the ordinary horse-drawn buggy, and to a few makes of motor trucks, or commercial vehicles.

The two-cycle engine is not used to any extent in automobile practice, principally because it is not as economical as the four-cycle engine in the use of fuel and oil, and because its construction is not such as to readily adapt it to high speeds. In this type of engine the cylinder is not completely cleared of exhaust gases at the end of the working stroke, so that the burned gases are liable to mix with the fresh charge and make a poor combustible mixture. This is most likely to occur when running at the high speeds required in pleasure cars. Various types of two-cycle engines have been designed from time to time for use on pleasure cars, and although these have their good features, practically all have had to give way to the more popular four-cycle engine.

55. Two-Cylinder Two-Cycle Engine.—An external view of a two-cylinder two-cycle engine of the two-port type, used on the Duryea motor buggy, is shown in Fig. 26. The cylinders *a* and *b* are placed side by side on the same side of the crank-shaft *c*, and the flywheel *d* is placed between them. The inlet ports leading into the crank-cases are located at *e* and the exhaust ports at *f* on the opposite side of the cylinders. Spark plugs *g* are screwed into the cylinder heads for the purpose of igniting the charge at the proper time.

This engine is provided with means for turning the flywheel over from the seat when starting. The arm *h*, which is free to rotate about the crank-shaft, is provided with a pawl *i* that can be made to engage in notches *j* placed at intervals around the flywheel rim. A wire and rope connection extends from the arm and pawl to a handle at the driver's seat. The engine can be turned over by pulling on this connection, thus engaging the pawl in one of the notches and rotating the flywheel.

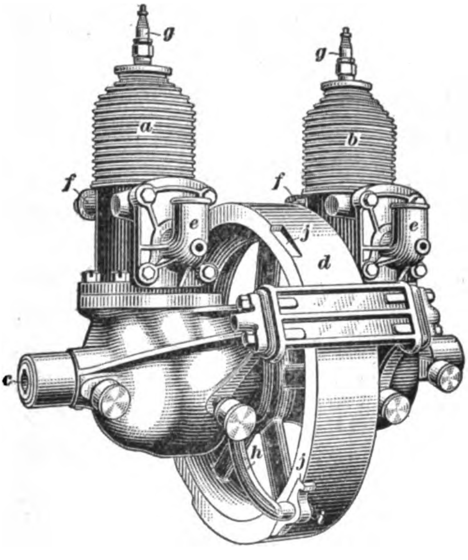

Fig. 26

56. A cross-sectional view of one of the cylinders of the engine illustrated in Fig. 26 is seen in Fig. 27, which shows the piston at the bottom of its stroke with the transfer port *a* and the exhaust port *b* open. The charge enters the crank-case through the crank-case inlet port *c*. This port is controlled by a check-valve *d*, which prevents the combustible mixture from flowing back into the inlet pipe or the carbureter when the piston is on its downward stroke. Normally the valve is held to its seat by a light spring, but when a vacuum is formed in the crank-case by the upward stroke of the piston, the valve opens inwards and allows the mixture to enter the crank-case. The deflector on the piston face is shown at *e*, and the spark plug at *f*.

57. The arrangement of the cranks of the engine illustrated in Fig. 26 is shown in Fig. 28. This illustration shows the

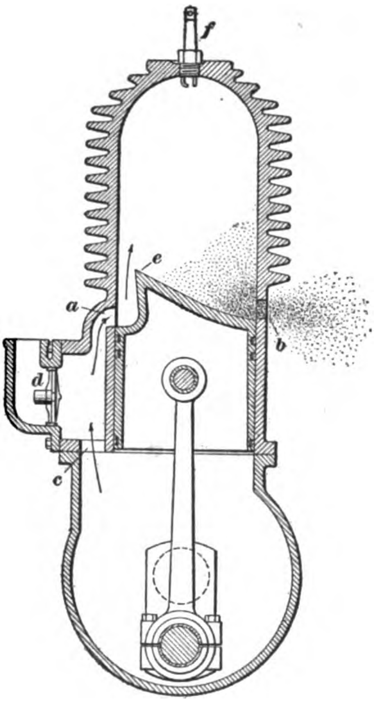

Fig. 27

pistons *a* and *b* connected to the cranks *c* and *d* by the connecting-rods *e* and *f*, respectively. The cranks are located on opposite sides of the crank-shaft so that the explosions in the cylinders will alternate, as is the usual custom in two-cylinder two-cycle engines. Each crank is provided with a counterweight *g* that serves to balance the moving parts of the engine. The crank-shaft *h* rotates in the roller bearings *i*, which are supported by the frame of the car. The rollers *j* drive the road wheels of the motor buggy.

58. Detailed views of one of the cylinders removed from the engine illustrated in Fig. 26 are shown in Fig. 29. In view (*a*) is seen the inlet side of the cylinder with the inlet port at *a*, and in view (*b*) is seen the exhaust side with the exhaust port at *b*. Copper spines for the purpose of carrying off the excess heat and thus preventing damage from

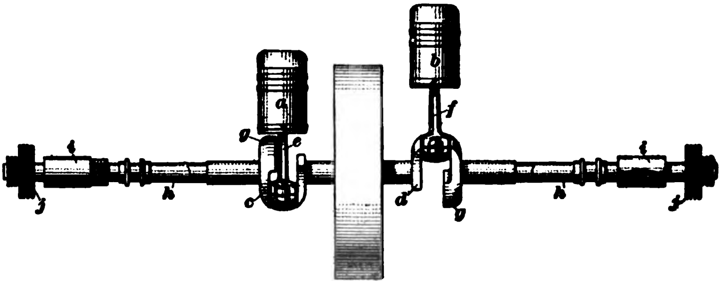

Fig. 28

over-heating are bound to the outside of the cylinders, as seen in view (*b*) These spines, or projections, serve the same purpose

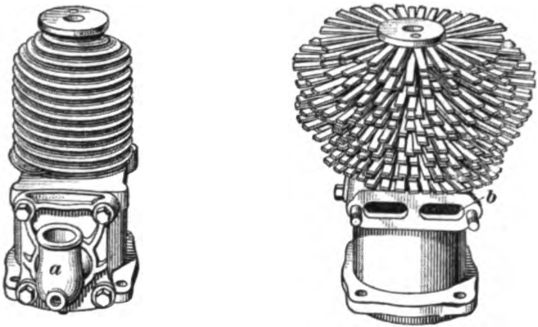

(*a*) FIG. 29 (*b*)

as the cooling water in the engines previously described.

59. Three-Cylinder Two-Cycle Engine.—The Chase

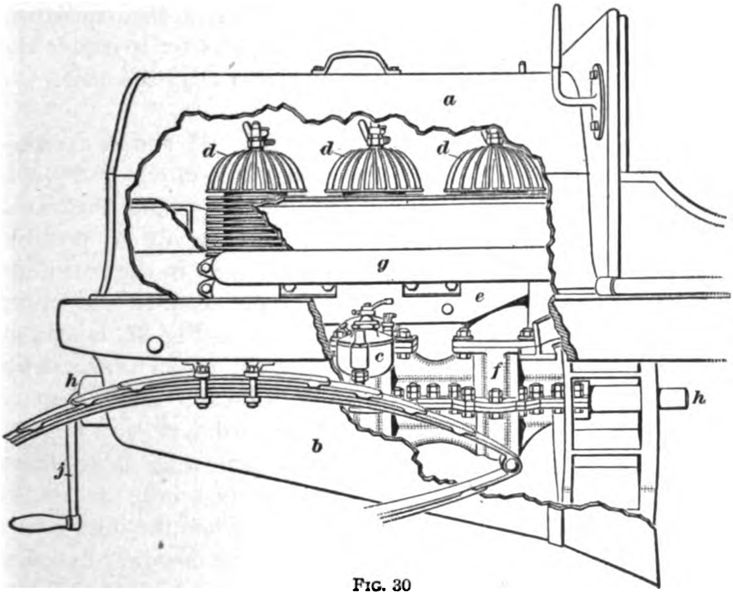

FIG. 30

three-cylinder two-cycle engine, which is of the three-port type, is illustrated in Figs. 30 a[illegible] Fig. 30 shows the engine mounted on the frame of the car with part of the hood *a* and mud pan *b* cut away, exposing to view the intake side of the motor. The carbureter is located at *c* and is connected to the cylinders *d* by the intake manifold *e*, through which the charge is drawn into the crank-case *f*. At *g* is the exhaust manifold, by means of which the exhaust gases escape into the exhaust pipe and thence to the atmosphere. The crank-shaft *h* extends lengthwise through the crank-case and is provided with the starting crank *j* for the purpose of turning over, or cranking, the engine when starting. This engine is of the air-cooled type, that is, the cylinders are cooled by currents of air flowing around and over them. Flanges are cast integral with the cylinder walls to increase their radiating surface and better to enable the air to carry away the heat.

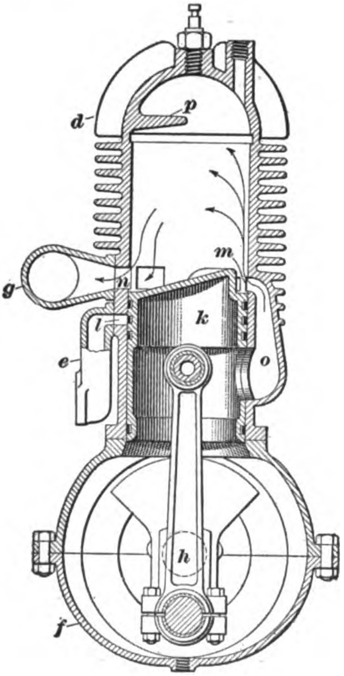

Fig. 31

60. Fig. 31 shows a cross-sectional view of one of the cylinders of the engine illustrated in Fig. 30. As far as possible the same parts in the two illustrations are lettered the same. The piston *k*, Fig. 31, is seen at the bottom of its stroke with the crank-case inlet port *l* closed and the transfer port *m* and the exhaust port *n* open. The operation of this engine is identical with that of the three-port engine shown in Fig. 5. A charge flows into the crank-case *f* on the upward stroke of the piston when the inlet port *l* is opened, and is slightly compressed on the downward stroke, at the end of which the transfer port *m* is uncovered and the mixture rushes into the combustion chamber through the passage *o*. On the next upward stroke of the piston the charge is compressed in the cylinder, after which it is ignited and the resulting expansion drives the piston downwards again, a new charge being precompressed in the crank-case at the same time. The exhaust gases escape through the port *n* at the end of each down stroke. A feature of this engine is the use of a baffle plate *p* in the combustion chamber. One of these plates is located on the exhaust side of each cylinder, and is for the purpose of preventing the fresh charge in the combustion chamber from escaping by way of exhaust port *n* at the beginning of the compression stroke.

GASOLINE AUTOMOBILE ENGINES

(PART 2)

DETAILS OF CONSTRUCTION

AUTOMOBILE-ENGINE CYLINDERS

WATER-JACKETED CYLINDERS

1. **Cylinders with Integral Heads and Jackets.**—The almost universal practice in water-jacketed automobile-engine construction is to cast the cylinder body, the head, and the water-jacket in one piece. In the earlier types of engines it was common practice to make the cylinder head a separate casting and bolt it on to the cylinder proper, but at the present time only a very few makers of automobile engines adhere to this custom. The chief object of casting the cylinder, the head, and the jacket in one piece is to avoid packed joints between the cylinder and the head and between the cylinder and the water-jacket.

2. The form of an automobile-engine cylinder depends on the location and arrangement of the inlet and exhaust valves. Classified according to the valve location, there are three general types of cylinders, namely, the **T**-*head*, the **L**-*head*, and the *valve-in-the-head*.

3. In engines of the **T-head type**, the inlet and exhaust valves are located on opposite sides of the cylinder, giving it, roughly, the appearance of the letter **T**. This type of cylinder

is illustrated in Fig. 1, which shows a cross-sectional view of one of the cylinders of the National, $4\frac{7}{8}'' \times 6''$, four-cycle engine. The combustion chamber *a* and the inlet and exhaust passages *b* are surrounded by the water passages *c*. The inlet and exhaust chambers are made alike, and the valves are interchangeable. The intake pipe is connected to the opening shown at *d* and the exhaust pipe to that shown at *e*, chambers being cored from these openings to the valves, as indicated by the dotted lines. The opening on top of the cylinder at *f* permits placing the inlet valve in position or withdrawing it, and also gives access to it; a corresponding opening *g* on the opposite side is provided for the same purposes for the exhaust valve. The openings are ordinarily closed by means of plugs screwed into them. The National engine is provided with two separate sets of spark plugs, and one of these is screwed into the center of each of the

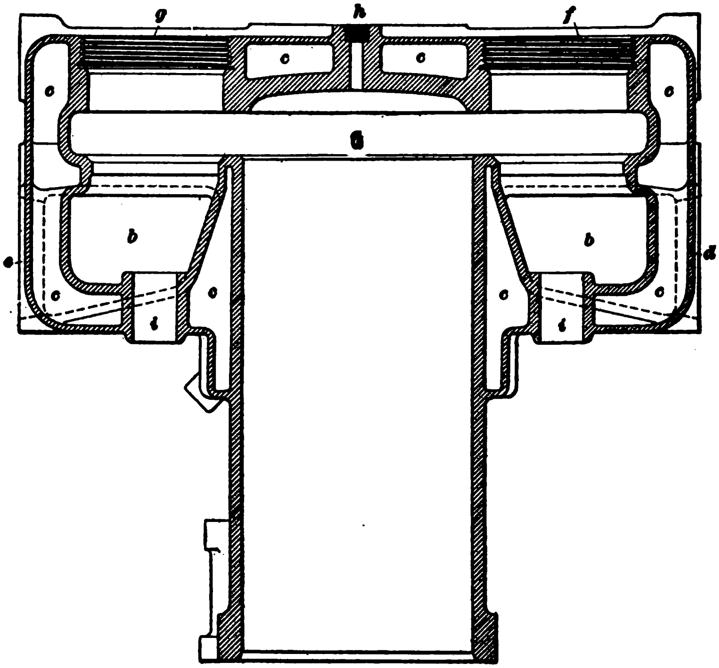

FIG. 1

plugs, or caps, that close the openings *f* and *g*. The opening *h* is for a priming cup, and the openings *i* are provided to accommodate the valve-stem guides.

4. When the inlet and exhaust valves are placed together on the same side of the cylinder and are operated by the same cam-shaft, the cylinders are said to be of the **L-head type.** This type of cylinder is illustrated in Fig. 2, which shows two views of one of the cylinders used in the Rambler four-cylinder, four-cycle engine. View (*a*) is a cross-section of the cylinder, and view (*b*), a side view and section through the valve chambers. A water-jacket *a* surrounds the upper part of the cylinder *b* and the valve chambers *c* and *d*. Valve-stem guides *e* are cast integral with the valve chambers, and the valves are made interchangeable. The valves may be removed by unscrewing the plugs, or caps, *f* and *g*. The spark plug is located over the inlet valve in the center of the cap *f*. The cooling water escapes from the water-jacket through the opening *h*. The opening *i*, which, ordinarily, is closed by a plug, gives access to the inside of the cylinder. In engines of this type, it is common practice to place the inlet valves of adjacent cylinders next to each other.

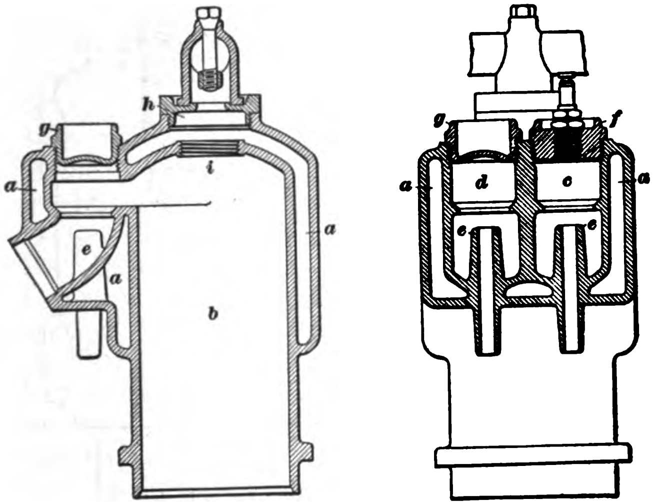

(a) (b)

FIG. 2

5. Valve-in-the-head engines, with cylinder, head, and water-jacket cast in one piece, usually embody some type of *valve cage* containing the valve seat and valve-stem guides. The valve-in-the-head construction is illustrated in Fig. 3, which shows a longitudinal section of a pair of cylinders of the Buick engine. Each cage consists of a cylindrical shell *a* that fits in a bored-out pocket in the cylinder head and has a large opening cut through the shell to register with the inlet or the exhaust passage The cage is forced against a shoulder *b* at the lower end of the pocket by means of an annular nut *c* screwed into the outer threaded end of the pocket. The valve-stem guide *d* is supported within the cage by means of a spider *e*, and the valve is held to its seat by a spring *f*, which is held in compression

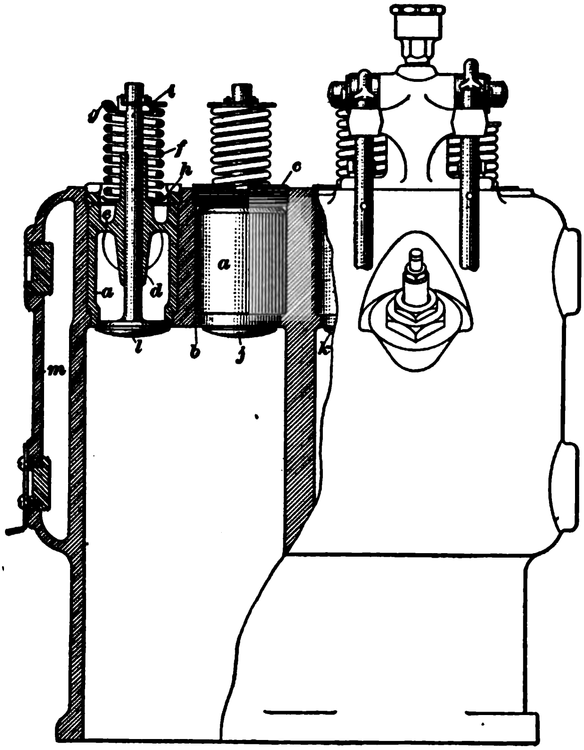

FIG. 3

between the spring seats *g* and *h*. The seat *g* is prevented from being forced off the valve stem by the cotter *i*. The valves are opened by pressure exerted on the upper ends of the valve stems. The two inlet valves *j* and *k* are located next to each other at the center of the twin casting, and the two exhaust valves are located at the ends of the casting, one being shown at *l*. This arrangement has the advantage that a single connection from the intake manifold is sufficient for both cylinders. A single continuous water-jacket *m* surrounds the entire casting, and the spark plugs are located on one side, immediately below the valve cages.

6. The cylinders shown in Fig. 3 have the valves arranged vertically in the cylinder heads. Another type of valve-in-the-head engine, in which the valves are inclined, is illustrated in Fig. 4, which shows a cross-sectional view of one of the cylinders of the engine used in the Stoddard-Dayton, model 58, car. In this engine, the valves are located on opposite sides of the cylinder and they are operated from separate cam-shafts by means of push rods and rocker-arms. The charge enters the inlet valve cage *a* through an opening at *b*, and the exhaust gases escape from the exhaust-valve cage *c* through an opening *d*. The valve cages *a* and *b* are inclined at an angle to the vertical and have between them a jacket space *e*. A water-jacket *f* surrounds the outside of the valve chambers, the combustion chamber *g*, and the upper part of the cylinder proper.

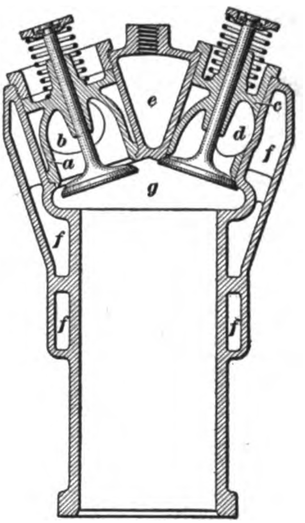

FIG. 4

7. The chief advantage of having the valves located in the cylinder head is that a more nearly ideal combustion chamber may be had with this design than with any other. The ideal combustion chamber is spherical in form, for the reason that a sphere has the least surface area for its cubical contents; hence, in such a combustion chamber, the loss of heat through the walls is least. Among the valve-in-the-head cylinders, those having the valves set at an angle more nearly approach this form of combustion chamber. However, motors with the valves located in the cylinder head have the disadvantage of requiring the use of a complicated and more or less noisy valve-actuating mechanism. This is a very important consideration, especially in high-speed engines.

T-head and L-head engines have the advantage of simple valve-operating mechanism. The valves are more easily removed than in the valve-in-the-head type, and the spark plugs can be located in the inlet valve chamber, where a fresh charge is always found. On account of this advantageous location of the spark plugs, T-head and L-head motors can be run at a lower speed under no load than can an engine with the valves in the head. Because of these practical considerations, most manufacturers make use of either the T-head or the L-head motor for ordinary pleasure car service; valve-in-the-head engines are used extensively in racing cars.

8. A type of engine cylinder in which the inlet valve is located in the head and the exhaust valve at one side is sometimes used. The appearance of the engine is similar to that of the regular L-head motor, except for the valve-actuating mechanism. The inlet valve is operated by means of a push-rod and a rocker-arm, and the exhaust valve, by means of a valve tappet that operates directly on the valve stem. In some Chalmers engines, which use this type of cylinder, both valves are operated from a single cam-shaft. The spark plug is located over the exhaust valve. This form of cylinder provides a better shaped combustion chamber than is provided by the T-head cylinder, and at the same time it allows large inlet and exhaust passages, as these may be placed on opposite sides of the engine. This is an advantage over the regular L-head cylinder, in which the valve passages are more restricted on account of all the valves being on the same side. On the other hand, this construction has the disadvantage of a

somewhat complicated valve-operating mechanism. Also, the spark plug is located in the exhaust-valve chamber, where a small quantity of burned gases is liable to become mixed with the fresh charge and thus make the mixture more difficult to ignite.

9. **Cylinders With Separate Heads.**—In the early automobile engines having cylinder heads cast separately, the upper end of the cylinder and the water-jacketed head were provided with passages for the circulation of the cooling water. The openings in the head and the upper end of the cylinders were made to match, and the joints were made tight by means of gaskets that contained holes corresponding to the water passages. The difficulty of keeping these narrow gaskets in place and of preventing the joint from leaking has led to the abandonment of this practice in engine design, except in a few special cases.

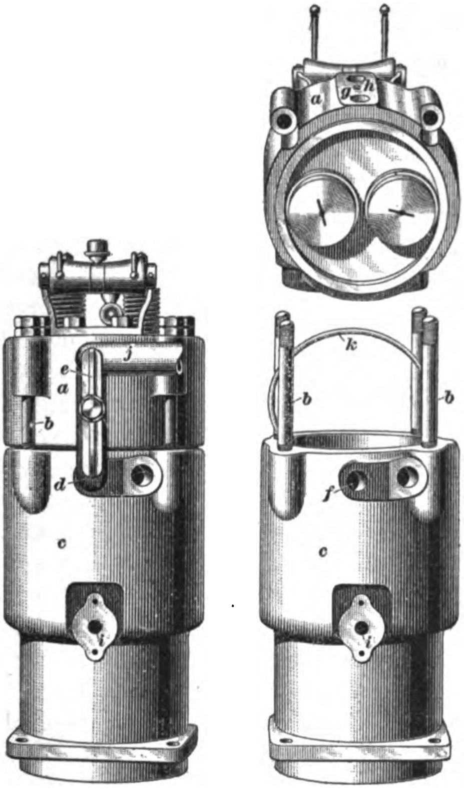

Fig. 5

10. In the Knox engine, as shown in Fig. 5, the cored openings for communication between the water-jacket and the head are omitted and an outside connection is used instead.

The detachable head *a* is held in place by four long stud bolts *b* that pass through lugs cast on the cylinder head, as shown. Communication between the head *a* and the water-jacket *c* of the cylinder is afforded by a separate detachable **U**-shaped hollow fitting *d* held in place by the yoke *e*, which also serves to hold in place the return-water manifold or pipe connection *j* leading to the radiator. One end of the fitting *d* fits in the opening *f* leading to the cylinder water-jacket, and the other end fits in the hole *g* of the cylinder head. A horizontal division plate, which is cast in the head, divides the water space thereof into two parts. The circulating water from the cylinder jacket enters the lower space through the opening *g* and passes out into the return-water manifold through the opening *h*. Water from the supply manifold enters the jacket at *i*.

On the bottom of the head there is a machined concentric tongue that fits into a corresponding machined groove in the upper end of the cylinder casting, and in the groove is placed a copper-asbestos gasket *k* that serves to make a tight joint when the nuts on the stud bolts *b* are screwed down. The manufacturers claim that, among other advantages of this construction, the machining of the whole bottom of the head contributes to the smooth running of multicylinder engines, because it insures combustion spaces of uniform capacity and lessens the liability to backfiring by eliminating the carbon-collecting projections, sharp points, rough edges, or uneven surfaces common to unmachined castings. Being located in the head, as shown, the inlet and exhaust valves that control the flow of the fresh charge and exhaust gases through passages cored in the head are surrounded by the circulating water and are thus kept cool.

11. Another example of a detachable water-jacketed cylinder head is illustrated in Fig. 6, which shows several views of the cylinders of the Ford, model T, engine. A side and part sectional view of the cylinders is shown in (*a*); a top view, in (*b*); and a bottom view of the head and a top view of the cylinders with the head removed, in (*c*) and (*d*), respectively. Each cylinder is of the **L**-head type, and the four cylinders are cast en bloc. The cylinder head *a* is a single casting that is bolted to the cylinders by fifteen capscrews *b*. When the head is removed by unscrewing these capscrews, the tops of the valves *c* and the tops of the pistons *d*, are exposed, thus facilitating the processes of removing deposits of carbon, regrinding the valves, and removing the pistons and connecting-rods. As shown by the sectional view, the valve stems are kept cool by the water circulating in the jacket *e* from which the water passes into the head through two passages *f*, one at each end of the cylinder casting, corresponding passages *g* being formed in the head, as shown by the bottom view of this part. The water that enters the water-jacket through the pipe *h* passes out to the radiator through the pipe *i* attached to the top of the head, as shown. The spark plugs *j* are screwed into the openings *k*, so as to project into the combustion chambers *l* formed in the head. A copper-and-asbestos gasket is used between the

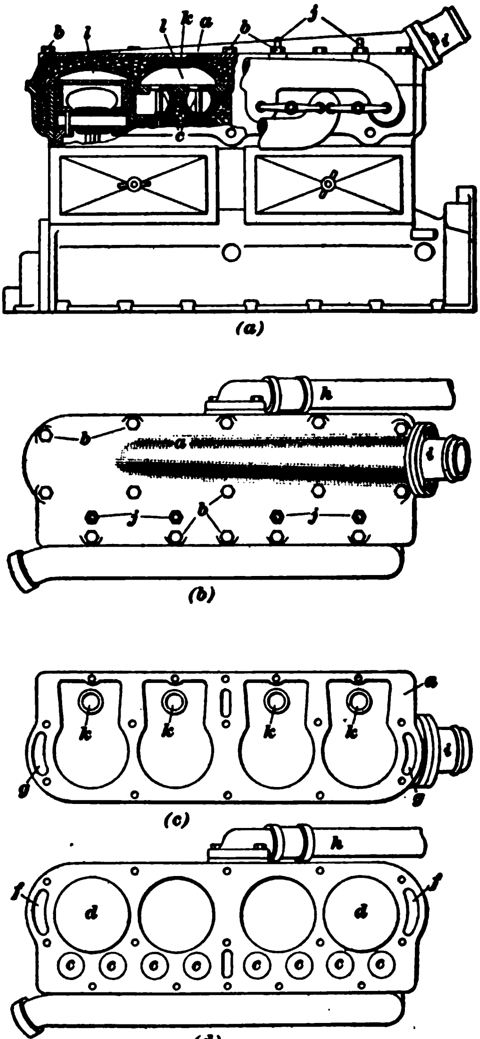

(a)

(b)

(c)

(d)

FIG. 6

cylinders and the head in order to form a tight joint. The gasket is comparatively wide and is not liable to be blown out on account of the cylinders being cast en bloc.

A special advantage of separate cylinder heads is that they allow a boring tool to be used to the best advantage and thus facilitate the boring of the cylinders in their manufacture. However, their use in automobile engine construction is almost entirely confined to the Knox and Ford engines.

12. Cylinders With Separate Water-Jackets.—The water-jacket that surrounds the cylinder of an automobile engine is necessary in order to prevent the damage to piston and cylinder that would otherwise result from burning the oil used for lubricating them. Great care must be taken to select lubricating oils that will stand even as high temperatures as those reached in water-cooled cylinder walls. With such inflammable fuel as gasoline, it is necessary to keep the combustion chamber, the piston head, and the valves reasonably cool in order to avoid premature explosions due to hot cylinder walls. These walls are made hot by the high compression pressures commonly employed with the high-speed, or automobile, type of engine, as well as by the heat of combustion.

13. In the majority of automobile engines, the water-jackets are cast integral with the cylinders, as is shown in Figs. 1 to 6. However, in a few cases, separate water-jackets made of sheet metal are successfully used. Examples of such jackets are to be found in the engines of the Cadillac and Chadwick cars. These jackets are lighter than those integrally cast, because they can be made thinner, and they are not so liable to be injured by a freezing of the cooling water. Another advantage of such jackets is that they can be readily cleaned when scale deposits accumulate in them.

14. A cylinder of the Cadillac engine is shown in Fig. 7, which serves to illustrate the separate water-jacket. This engine is of the **L**-head type, with all the valves on the right side of the engine, the cylinders being cast separately. The water-jacket *a*, which surrounds the cylinder *b*, is made of spun copper. The lower end of the jacket is pressed over a flange *c* that is cast on the cylinder, and a steel ring *d* is forced over the copper, thus clamping the jacket into position and making a tight joint. The cylinder head *e*, containing the valve chamber, is secured to the top of the cylinder by a right-and-left threaded nipple *f*. The top of the copper jacket is clamped between the cylinder head and the top of the cylinder at *g* and *h*, thus forming a tight joint. The valve chamber *i* is surrounded by water passages *j*, which are cast integral with the cylinder head. The piston is shown at *k*. In case of injury to any part of a cylinder of this form, as for instance to the head, the particular part damaged can be replaced at the factory without discarding the entire cylinder.

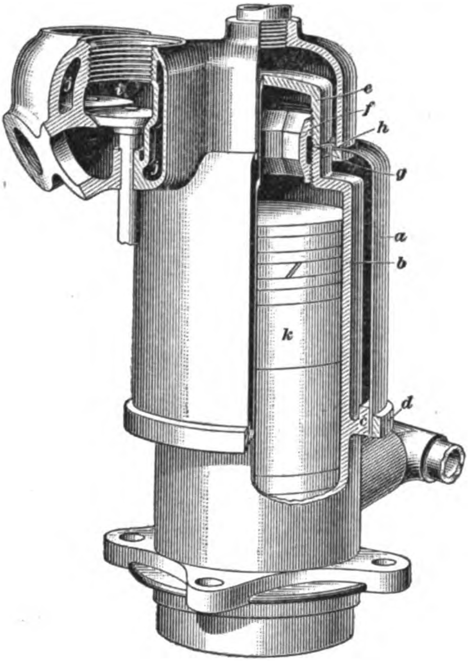

FIG. 7

In the six-cylinder engines of the Chadwick car, each pair of cylinders is surrounded by a separate copper water-jacket.

AIR-COOLED CYLINDERS

15. The internal construction of an air-cooled cylinder is the same as that of a water-cooled cylinder; also, the arrangement of the valves and other mechanism is similar. The external surface of an air-cooled cylinder, however, is extended, or increased, by various means, usually by the use of thin heat-radiating flanges, or ribs, cast integral with the cylinder walls or fitted to them. These ribs, or flanges, serve to conduct the heat from the cylinder walls, the heat being absorbed and carried away by the air that comes in contact with the flanges.

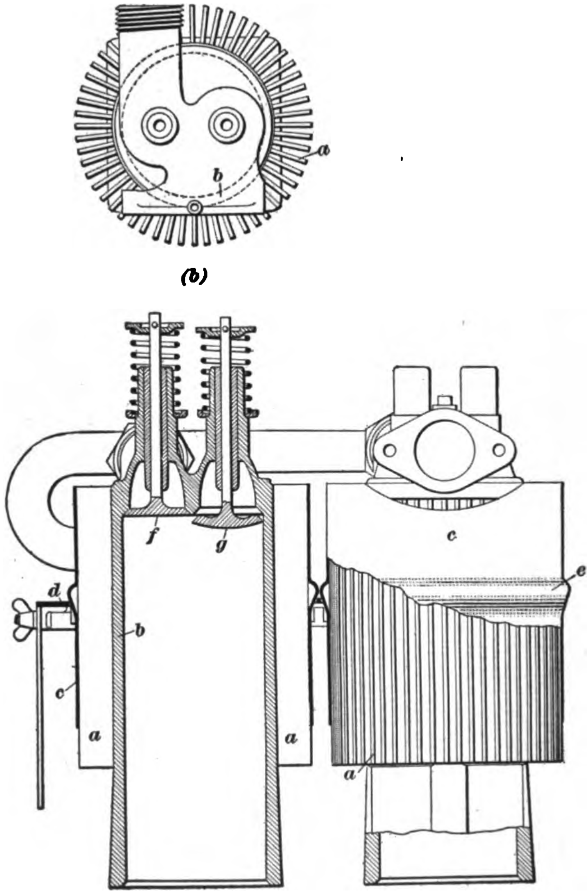

(b)

(a)

FIG. 8

In some of the earlier air-cooled engines, the cylinders were provided with pins, or studs, radiating from the outer surface of the casting. These studs, which were screwed into the cylinder walls were sometimes threaded from end to end in order to provide a greater heat-radiating surface.

16. The best-known example of the air-cooled cylinder is that used on the Franklin automobile, which is practically the only American pleasure car propelled by an air-cooled engine. Two of these cylinders are illustrated in Fig. 8, a sectional view of one and an external view of the other being shown in (*a*) and a top view of one of these cylinders in (*b*). Like parts are lettered the same in each view. A large heat-radiating surface is obtained by the use of vertical steel flanges *a* that are cast in the wall *b* of the cylinder. The flanges are spaced about $\frac{1}{4}$ inch apart around the entire outer circumference of the cylinder and project radially outwards a distance of about 1 inch. The average length of these flanges is 8 inches. A cylindrical air jacket *c* surrounds each cylinder and, with the cylinder wall, it forms an air-tight passage through which the cooling air is drawn. The air is thus brought into close contact with the flanges, which conduct the heat from the cylinder walls. The air jackets *c* are set in a horizontal metal deck *d* at the shoulder *e*. This deck forms, with the engine hood and the dash, two separate compartments, one below and one above. Air drawn from one compartment to the other must flow through the jacket *c* and thus come in contact with the flanges *a*.

The cylinders shown in Fig. 8 are of the valve-in-the-head type. The valves *f* and *g* open downwards into the head of the cylinder and are operated by push rods and rocker-arms. The valve seats are cast integral with the cylinder head; that is, no valve cages are used.

17. In the Chase two-cycle engine cylinder, the cooling flanges are cast integral with the cylinder walls and encircle the cylinder, being radially arranged on top. This engine is used principally on motor trucks.

A large radiating surface is obtained in the Duryea two-cycle engine by fastening copper spines to the cylinders in the manner shown in Fig. 9. The cylinder is finished inside and outside. On the outside, the cylinder surface is deeply grooved. One of these spiral grooves is wider than the other and is intended to receive the copper spines *a*. Both add much to the stiffness of the cylinder wall and, without making it heavy, insure its cylindrical form. At the head of the cylinder is a small hole into which the end of a steel wire is hooked, the other end being fastened as shown in Fig. 9 (*b*), which indicates how the cylinder appears after the spines are bound in place, the plain, unwrapped cylinder being shown in Fig. 9 (*a*). The copper spines are $\frac{5}{16}$ inch wide, $\frac{1}{20}$ inch thick, and about 4 or 5 inches long. They are doubled at the middle to fit the groove into which they are forced and stand with both ends projecting, each projection being 2 or 2½ inches long. The steel wire is tightly drawn to bind them in place. When applied, this wire is heated, and as it cools it shrinks and grips the copper still tighter. It is also of such quality that it does not expand under heat as much as does the cylinder; therefore, the higher the temperature the tighter it binds. There is no tendency of the copper to expand away from the cylinder. The spines radiate like spokes of a wheel, and thus allow ample space for the air to circulate to the bottom of the grooves. The extra groove in itself allows much additional surface to be reached by the air. The spines are more or less irregular, and thus offer a variety of paths to the air flowing around them. In addition to this, copper has the advantage of being a good conductor of heat and therefore the spines form an efficient radiating surface. The two-cycle engine cylinder is well adapted to air cooling because the exhaust gases do not heat the head, but pass out at a point farthest from the head, which is also cooled from the inside by each new charge thrown against it. The head has no valve chambers or mechanism to prevent free access of air to the outside.

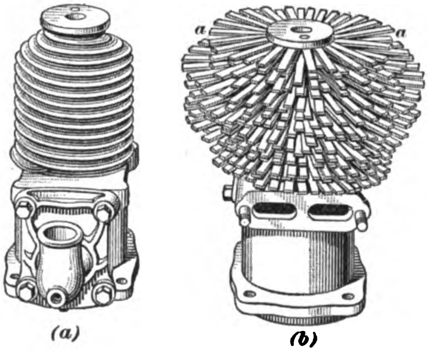

(*a*) (*b*)

Fig. 9

CRANK-CASES

18. **General Construction.**—The casing, or housing, of an automobile engine that encloses the cranks and crank-shaft, and, frequently, other moving parts as well, is called the **crank-case.** Besides forming a housing for most of the working parts, it also serves as a frame, or bed, that supports the crank-shaft and cylinders; and, usually, the lower part serves as a receptacle for the oil used in the lubrication of the engine. Crank-cases are generally cast of aluminum or an alloy of aluminum, although in rare cases manganese bronze, malleable iron, or cast iron is employed. Aluminum is used on account of its light weight in comparison with its strength. The size of a crank-case depends entirely on the design of the engine, but in any event it must be large enough to allow the cranks to rotate freely within it and strong enough to support the cylinders and crank-shaft.

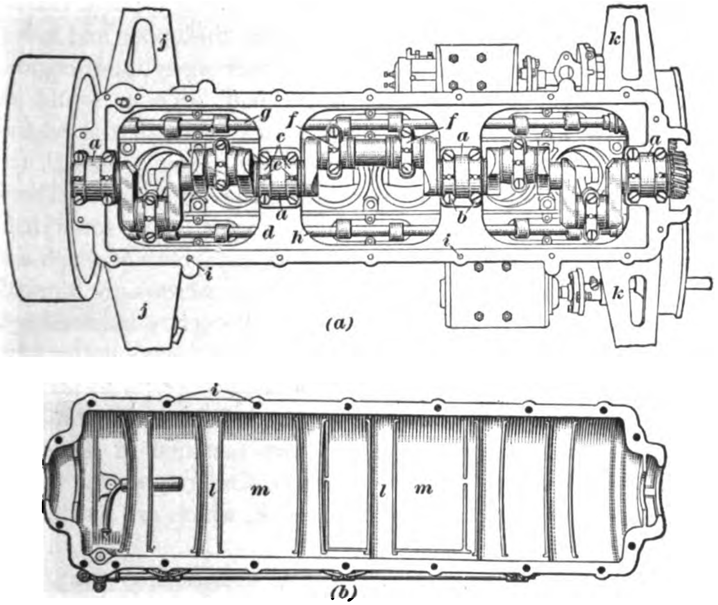

FIG. 10

Crank-cases are usually divided horizontally into two halves, which are bolted together. However, they are sometimes divided vertically, or they are made in single castings provided with openings for the connecting-rods and for inspection purposes. The type last named is known as the *barrel type*.

19. Typical Crank-Cases.—A very common type of automobile-engine crank-case is that in which the case is divided horizontally into two halves and the crank-shaft bearings are supported entirely from the upper half. This type of crank-case is illustrated in Fig. 10, which shows the upper and lower parts of the crank-case used on the Premier six-cylinder engine. In (*a*) is shown a view of the upper half, such as would be obtained by a person lying on his back beneath the engine and looking upwards after the lower half is removed. In (*b*) is shown a top view of the lower half of the crank-case. There are four crank-shaft bearings *a* in this case. The lower half of each bearing is a cap held in place by capscrews *b*, which are prevented from turning by keepers *c*; the capscrews are screwed into the supports *d*. Movement of the keepers *c* is prevented by pins *e* that extend through the keepers and have cotter pins passed through them. The object of the keepers is to prevent the capscrews from turning under the influence of vibration. The connecting-rod bearing caps *f* are fastened in the same manner. The engine is of the T-head cylinder type, the valves being operated from cam shafts *g* and *h*, which are located on opposite sides of the crank-shaft.

The lower half of the crank-case is attached to the upper half by means of bolts that pass through the holes *i*, and the entire case is supported from the frame of the automobile by the arms *j* and *k*. The lower half is provided with the oil troughs *l*, into which the ends of the connecting-rods dip in order to lubricate the moving parts of the engine. The bottom *m* of the case, beneath the oil troughs, is used as an oil well, or reservoir.

In many cases the oil reservoir is a separate casting bolted to the lower half of the crank-case, and in a few instances the lower crank-case is made of pressed steel. Sometimes the troughs are made of sheet metal and inserted into the lower half of the crank-case.

Some crank-cases are made with an enlarged extension on one end, which extension encloses the flywheel.

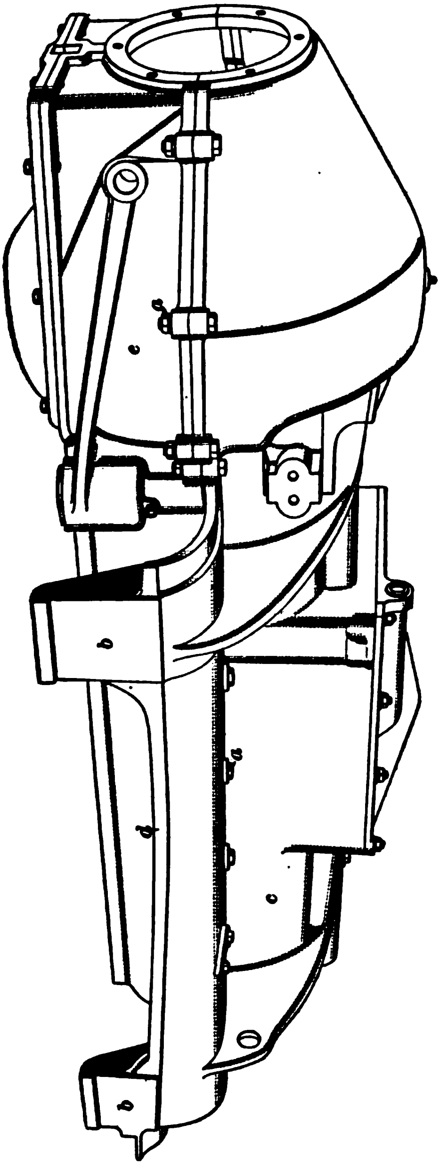

Fig. 11

20. An example of a crank-case divided horizontally, but having its supports attached to the lower half, is found on the Alco car. An external view of this crank-case is shown in Fig. 11. The upper and lower halves are held together by bolts *a*, and the entire crank-case is supported by the arms *b*, which are cast integral with the lower half *c*. These arms are connected on each side by a web *d* that serves to stiffen them. This web also forms a support for the engine auxiliaries, such as the magneto and the pump, and acts as a pan to exclude dirt from below. The crank-shaft bearings, which are in line with the division line of the case, are supported directly by the lower half. The flywheel and the clutch are enclosed within the enlarged part *e*.

21. Another example of a crank-case that is supported by its lower half is illustrated in Fig. 12, which shows a top view of the bottom half of the crank-case used on the Ford, model T, automobile. The crank-shaft bearings are carried by the upper half of the case, which is of cast iron and is cast integral with the four cylinders. The lower half is of pressed steel and is bolted to the upper half. An inspection plate *a* is bolted to the bottom half and can be removed for inspection purposes.

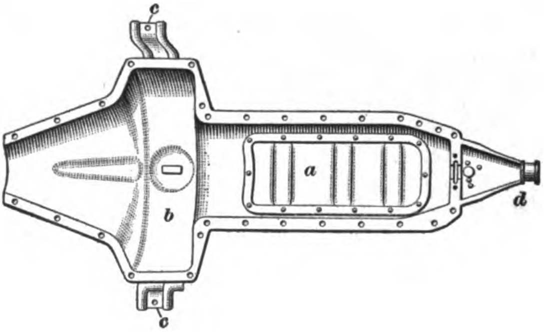

Fig. 12

The rear end *b* encloses the flywheel and transmission gears and is supported by two arms *c* that are fastened to the case. The front end is supported at a single point *d*, thus forming the three-point suspension method of support.

22. A crank-case made of a single casting and provided with an opening for inspection is illustrated in Fig. 13, which shows the crank-case of the Rambler 38-horsepower, four-cylinder engine. In this case, the opening is in the side, and it is ordinarily closed by means of a cover fastened on with capscrews. The interior of the case is divided into two parts by a partition *a* that supports the center bearing of the three-bearing crank-shaft. The end bearings are located at the ends of the case. In this engine, all the valves are located on the same side, the valve-lifter guides being shown at *b* and the single cam-shaft at *c*.

In some crank-cases of this type, for instance, in that used on the Chalmers "36" car, the opening is located at the bottom and the cover is used as an oil reservoir. The crank-case is made of a single casting in this instance also. The advantage of this construction is that it provides a very rigid crank-case, and hence a good support for the engine.

23. A vertically divided crank-case, such as is used on the Winton six-cylinder engine, is illustrated in Fig. 14. This case, which is made of aluminum, is divided into two halves, but the dividing line is vertical and forms right and left halves, instead of the common upper and lower halves. The crank-shaft bearings *a* are mounted in the right half of the case, making it possible to remove the left half and thus expose the entire crank-shaft to view without interfering with the adjustment of any of the bearings. Shallow compartments, or troughs, *b* are located beneath each connecting-rod. They contain oil into which the ends of the connecting-rods dip. Drain holes *c* serve as overflows that prevent too high an oil level in each

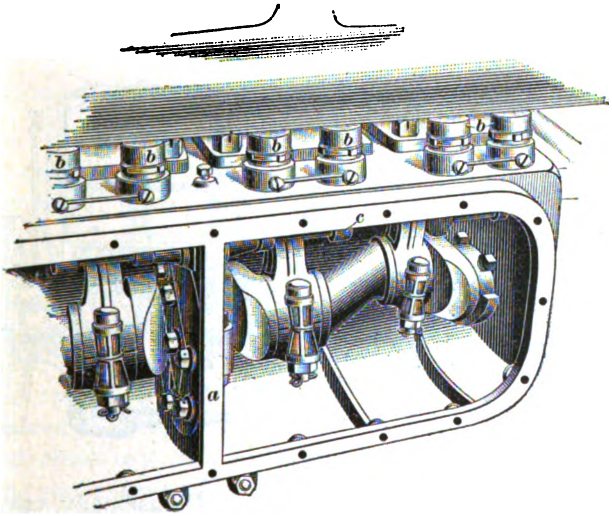

FIG. 13

trough. The left half of the crank-case, not shown, is secured to the right half by means of capscrews that are screwed into the holes *d*. The removable half is provided with three handholes that permit inspection without removing the entire half. The cylinders of this engine are of the **L**-head type, all of the valves being operated from a single cam-shaft *e*.

24. The crank-case of a two-cycle engine must be air-tight in order that the fresh charge can be compressed in it before being admitted into the cylinder. There is liability of leakage through the crank-shaft bearings, and to prevent this, these bearings should be of sufficient diameter and length so that they will not wear out rapidly. Occasionally, two-cycle engines are provided with stuffing boxes on one or both ends of the crank-case bearings, and sometimes special forms of bushings are used with a fair degree of success to prevent leakage. In three-port, two-cycle engines, the piston is provided with a piston ring at its lower end to prevent the gases from leaking back past the piston into the inlet port.

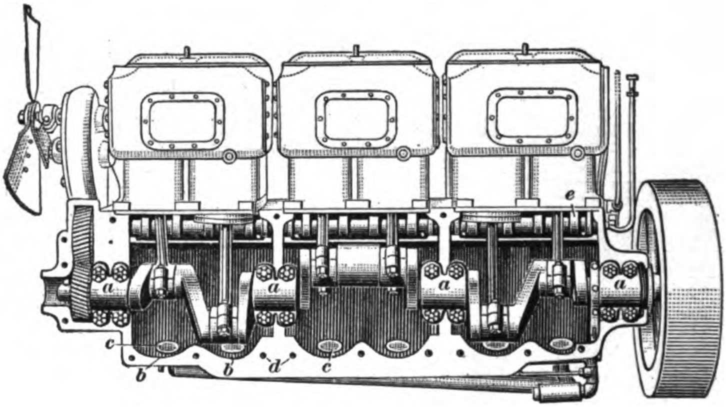

FIG. 14

In multiple-cylinder, two-cycle engines, it is important that one crank-case should not leak into the other; otherwise, there would be no crank-case compression. With removable cylinder heads, such a condition can be detected by removing the heads and noting the velocity with which the gas or the air enters the combustion chamber through the passover port when the engine is turned over.

The crank-case of a two-cycle engine must be as small as possible, so that the required compression of the fresh charge may be obtained. The connecting-rod is usually made as short as possible to attain this object, and in some cases the volume of the crank-case has been decreased by providing the crank-shaft with disks instead of the usual crank-arms. The disks occupy more space than the crank-arms in the crank-case, and hence decrease the volume. They thereby increase the ratio between the volume of the case when the piston is at the top of the stroke and the volume when the piston is at the bottom of its stroke, and, consequently, cause a greater degree of crank-case compression.

25. Crank-Case Breathers.—The crank-cases of four-cycle engines are provided with one or more openings to which are attached pipes, called *breathers*, that allow the escape of air and hot gases. With the four-cycle engine, an air-tight crank-case would not be advantageous, because where the hot gases leak past the piston rings into the crank-case, there would be a tendency to overheat the bearings and to burn the oil, and through imperfect lubrication rapid wear of the engine would result. The breathers prevent this by allowing these hot gases to escape. In addition to this, the pressure in a closed crank-case of a multiple-cylinder engine varies because of the movements of the reciprocating parts; hence, another use of the breather is to relieve this pressure variation and keep it the same at all times. Varying pressures in the crank-case might interfere with the proper working of the lubricating system by forcing the oil out of the crank-case through the joints or bearings. Crank-case breathers usually serve the purpose of oil filling tubes, through which the lubricating oil is poured into the lower half of the case.

26. Breathers are usually located in the upper part of the crank-case and are frequently placed on the supporting arms. Occasionally, they are cast integral with the case, but more often they are separate pipes bolted on.

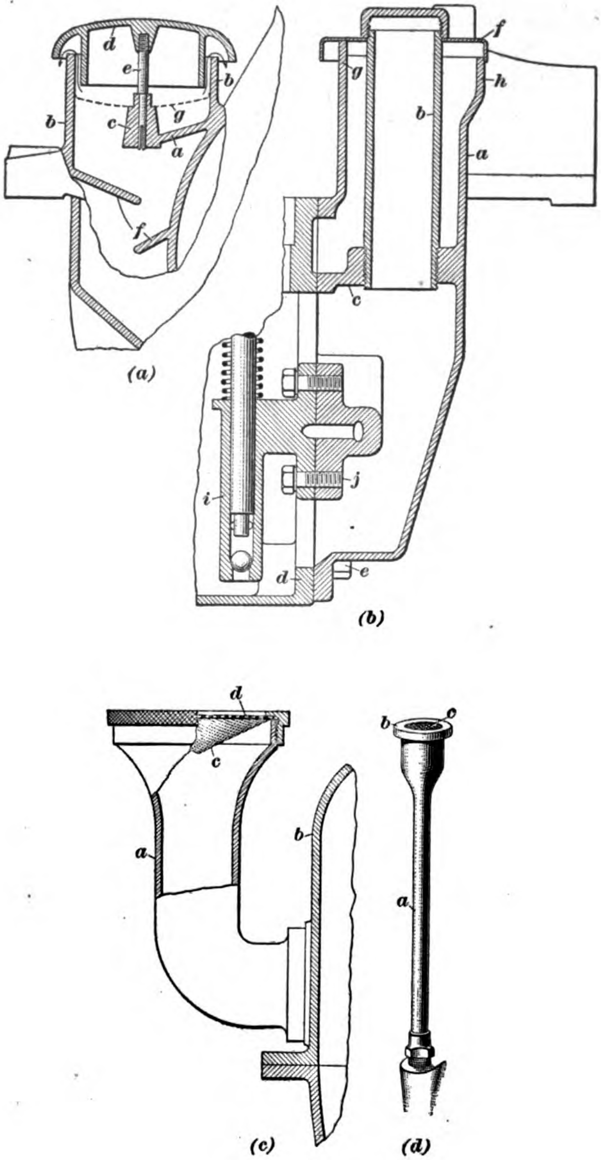

FIG. 15

An example of a breather pipe cast integral with one of the supporting arms of the engine is shown in Fig. 15 (*a*). The web *a*, which is cast integral with the pipe *b*, carries a boss *c*. The cover *d* is supported by a stem *e* that fits in a hole in the boss. The lower end of the stem *e* is slotted, and the two halves thus formed have a tendency to spring apart and hence hold the cover in place. The air and hot gases escape between the edge of the cover and the top of the pipe, as shown by the arrows. The breather is provided with baffle plates *f* that are inclined downwards to prevent the escape of oil with the air. The oil globules are collected on these plates and returned to the oil reservoir in the bottom of the crank-case. The dome-like cover also serves to prevent the escape of oil. The breather communicates directly with the oil reservoir and is provided with a screen at *g* for cleaning the oil as it is poured in. The oil reservoir can be filled by simply removing the cover.

27. Another type of crank-case breather, in which the pipe is bolted to the crank-case by capscrews, is shown in Fig. 15 (*b*). The breather consists of an outer casting *a* and an inner tube *b*, which is screwed into a partition *c* in the outer port. The part *a* is secured to the side of the crank-case *d* by means of six capscrews, one of which is visible at *e*. It is provided with a cover *f* that is supported by three extensions of the casting, as shown at *g*, thus allowing air and hot gases to escape between the cover and top of the breather. The outer part of the breather is formed into a lip *h*, into which oil may be poured. The outer casting *a* is in communication with the crank-case proper, and the inner tube *b* opens into the oil reservoir and is the pipe through which the reservoir is filled. The oil pump *i* is attached to the breather by capscrews *j*.

28. A simple form of breather and oil filler is shown in Fig. 15 (*c*). It consists of a pipe *a* secured to the side of the crank-case *b* by means of capscrews. A funnel-shaped wire screen *c* is located in the upper end of the pipe for the purpose of straining the oil as it is poured into the case. The cover is fitted with a second wire screen *d* that prevents oil from escaping from the crank-case with the air or the gases.

29. A common method of attaching a crank-case breather to the top of the crank-case is shown in Fig. 15 (*d*). In this case, the breather is simply a long pipe *a* enlarged at the upper end and provided with a cap *b* that is screwed on. The cap contains a screen *c* that prevents oil from escaping with the air. The breather pipe is screwed into the upper part of the crank-case and is long enough to project up above the manifold, where it is within easy reach.

Crank-case breathers vary greatly in details of construction and in method of attachment, but they are all used for the same purpose. The general scheme for obtaining the desired result is practically the same in all types, as illustrated in Fig. 15, which illustration is meant only to show the general design.

MANIFOLDS

30. Inlet Manifolds.—In the design of inlet manifolds for automobile engines, the most important considerations are that the incoming fresh charge be equally divided among the various cylinders and that the mixture going to the cylinders be of uniform richness. These problems are comparatively simple with four-cylinder, four-cycle engines, because the lengths of the branches, or pipes, running to the inlet valves can easily be made equal.

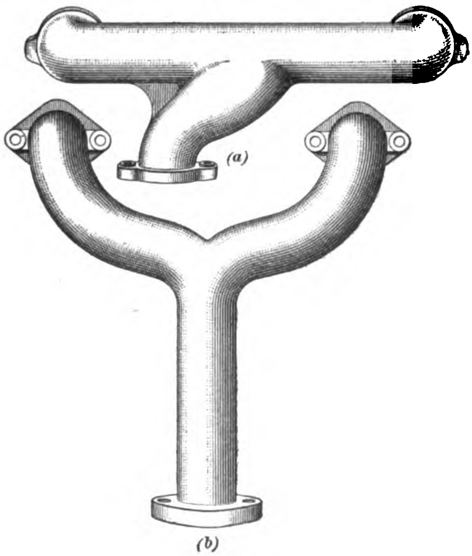

FIG. 16

The ordinary type of manifold, which is used on engines having their cylinders cast in pairs, consists simply of a main inlet pipe leading from the carbureter and two branches leading to the inlet-valve chambers. The manifold may be in the form of the letter **T**, like that shown in Fig. 16 (*a*), or it may be in the form of a **Y**, like that shown in (*b*). The two-branch type of manifold is possible only in motors having the inlet valves of adjacent cylinders placed side by side. With engines having the cylinders cast separately, the manifold is provided with four branches, and where the cylinders are cast en bloc the gas inlet sometimes consists simply of a single pipe leading from the carbureter to the cylinder casting. With a gas inlet of this type, the charge is distributed to the valves through passages in the cylinder casting.

31. In the six-cylinder engine of the four-cycle type, the problem of gas distribution is much more complex than in the four-cylinder engine, because of the greater number of valve chambers to which the mixture must be conducted. The most efficient form of manifold depends largely on the order of firing and on the grouping of the cylinders. A simple **T**-shaped manifold for a six-cylinder engine having its cylinders cast in pairs is shown in Fig. 17. It is similar to the **T**-shaped, four-cylinder manifold, except that there are three branches leading to the cylinders, each branch supplying fuel to the inlet valves of two cylinders.

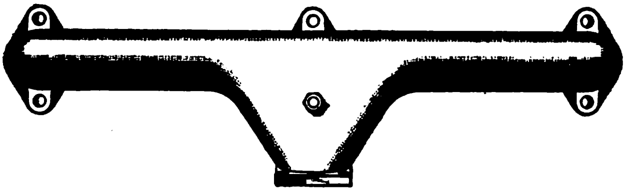

FIG. 17

In some engines, the carbureter is located on the opposite side of the engine from the inlet valves, and the inlet manifold extends over the tops of the cylinders. This forms a long inlet passage from the carbureter to each valve. In other cases, the inlet pipe is very short. A short inlet pipe is generally to be desired on account of the condensation that is liable to take place in one of considerable length. Six-cylinder manifolds are sometimes made Y-shaped or V-shaped, and the pipes are often curved in order to provide room for accessories. Inlet manifolds are fastened to the cylinder castings by capscrews or by means of yokes and studs. They are most frequently bolted through a flanged joint to the carbureter. Inlet manifolds are generally cast of aluminum, brass, or malleable iron. Some manufacturers are water-jacketing their inlet manifolds for part of their length, to assist in vaporizing the fuel and to prevent condensation, connecting the inlet manifold water-jacket to the cooling system of the engine.

32. Exhaust Manifolds.—The manifold that conveys the exhaust gases to the exhaust pipe is usually in the form of a pipe of large diameter that communicates with the various exhaust ports and is connected in the rear to the exhaust pipe that runs to the muffler. The manifold usually slopes downwards at an angle approximating 45° at its rear end, where it is joined to the exhaust pipe.

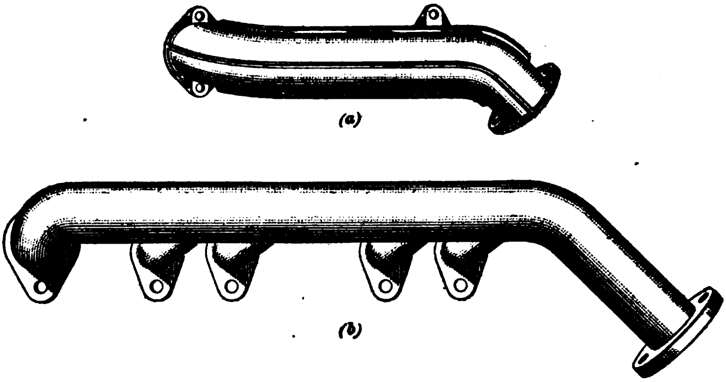

FIG. 18

In motors having cylinders that are cast separately, one manifold connection from each cylinder is of course necessary. With cylinders cast in pairs or in threes, two different arrangements are possible; there may be a single connection for each cylinder, or there may be a connection for each group of cylinders. In the case of T-head motors with cylinders cast in pairs, a single connection for each pair is customary, although separate connections are also used. In motors with the cylinders cast en bloc, there may be a single connection for each cylinder, one for each pair, one for each set of threes, or simply a single connection to the entire bloc.

A common form of exhaust manifold for a four-cylinder engine of the T-head type is shown in Fig. 18 (*a*). The manifold is sometimes provided with longitudinal ribs, as shown, to help cool it. A manifold for a six-cylinder engine of the L-head type is shown in Fig. 18 (*b*). It has a separate connection for each cylinder. Those connections are spaced as shown to allow room for the connections from the inlet manifold, which is of the three-branch type.

Exhaust manifolds are generally attached to the cylinder castings by means of capscrews that pass through flanges, although they are sometimes secured by yokes and studs. They are generally made of malleable iron or they are steel castings, but sometimes they are made of steel tubing.

RECIPROCATING AND ROTATING PARTS

PISTONS

33. The **pistons** used in automobile engines are made hollow to receive one end of the connecting-rod, which is joined to the piston by means of a *piston pin*. Such pistons are of the so-called *trunk type*, being constructed in this way so as to make a shorter and more compact engine. The piston consists of a hollow cylindrical iron casting that is carefully machined in order to have a good working fit in the cylinder. The diameter of the piston is slightly less than the bore of the cylinder. If it were the same, the piston would stick when it becomes heated, because the piston becomes hotter and expands more than the cylinder, which is kept relatively cool by the water-jacket. An air-tight joint is made between the piston and the cylinder wall by means of *piston rings* that are placed in grooves surrounding the piston.

34. Piston pins are mounted in the piston in two ways: they are either secured to the piston casting at each end, the central part having a bearing in the small end of the connecting-rod, or they are fastened to the upper end of the connecting-rod and have bearings in the piston casting.

A piston having the pin attached to the casting is shown in Fig. 19, (*a*) being an outside view and (*b*) a sectional view. The outside of the piston is provided with three rings *a*, which form an air-tight joint between the piston and the cylinder wall. These rings are parted, as shown at *b*, so that they can spring outwards against the cylinder wall and prevent the gases from escaping from the combustion chamber into the crank-case. Each of the grooves in which the rings are set, except the lower one, is made with square corners. The lower corner *c* of the groove in which the lower ring fits is beveled to an angle of 45° instead of being square and thus forms an oil groove, or wiper groove. The sharp edge of the lower ring, on the downstroke of the piston, scrapes or wipes all excess oil on the cylinder wall into this wiper groove, whence this oil is conveyed through holes to the piston pin to assist in its proper lubrication. This construction is used in the Northway motors; some other manufacturers do not use this wiper groove. An oil groove *d*

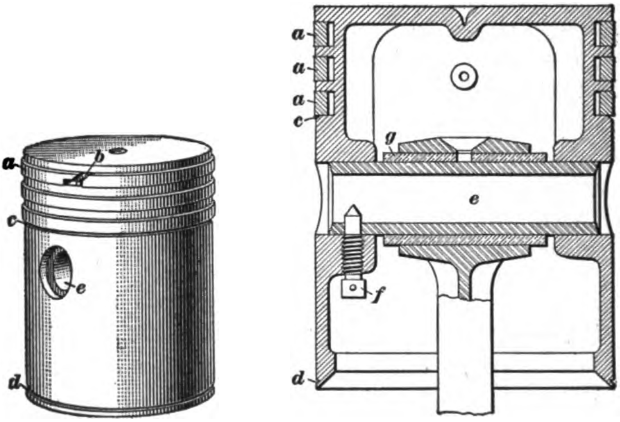

(*a*) (*b*)

FIG. 19

is turned on the bottom end of the piston for collecting the oil that is splashed upwards from the crank-case and distributing it over the cylinder wall.

The piston pin *e* is hollow, and it is secured in the piston casting by means of a setscrew *f*, which is prevented from backing out by a short wire that is pushed through a hole in the head of the screw. The setscrew prevents the piston pin from turning in the piston and from moving endwise and thus scoring the cylinder wall. The middle part of the pin *e* fits in a hard bronze bushing *g* in the upper end of the connecting-rod.

35. There are several additional methods of fastening the piston pin to the piston. Some of these methods are shown in Fig. 20. In (*a*) the pin is held in place by a locking screw *a* that screws into the boss *b* of the piston and extends through a hole in the hollow piston pin *c*. The locking screw is prevented from unscrewing very far by means of a cotter pin *d* that passes through a hole in the inner end of the screw. In some cases a nail or a piece of wire is used instead of a cotter pin. Sometimes use is made of two setscrews and a single piece of wire; the wire is made to pass through the holes in both screws, and its ends are turned back, as shown in (*b*). In another method, as shown in (*c*), the screw passes clear through the piston pin and the end screws into the boss. The screw in this case is prevented from backing out by a short piece of wire or a pin that passes through a hole in its head and strikes against the inside of the piston. In still another method, as shown in (*d*),

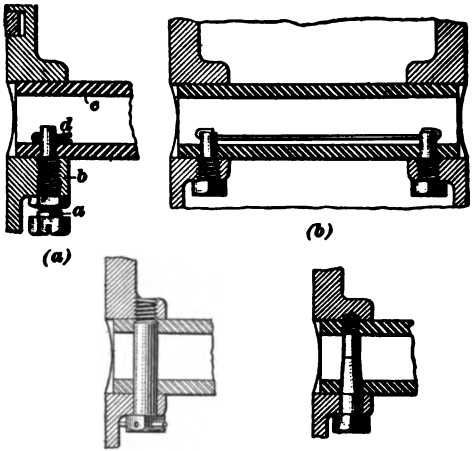

FIG. 20

the screw is tapered over part of its length. The tapered part passes through a hole in one side of the piston pin and screws into a hole in the other side. Screwing up the pin draws the tapered part tightly in place.

Some pins are held in position by placing a piston ring around the piston and over the ends of the pin. In other cases, various kinds of keys are used for keying the pin in the piston bosses.

36. Two sectional views of a piston having the pin secured to the connecting-rod are shown in Fig. 21. The small end *a* of the connecting-rod is split and clamped to the middle of the piston pin by means of a capscrew *b*, which passes through the lugs *c*. The pin is free to turn in the piston bosses *d*. The piston shown is provided with four piston rings *e* and two oil grooves *f*. All the rings are located above the piston pin.

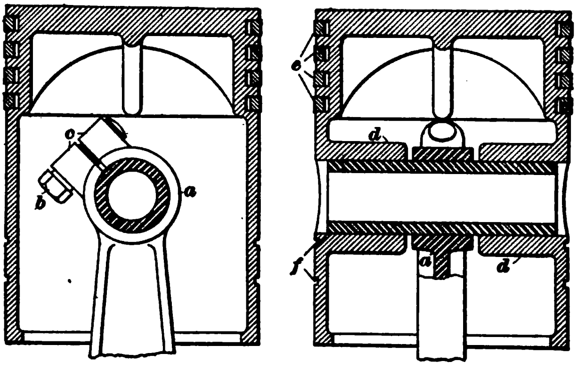

Fig. 21

In some designs, the connecting-rod end is pinned to the piston pin by means of a tapered pin that is fitted with a nut at one end. The pin passes through the end of the connecting-rod and through the piston pin, and is held in place by the nut.

37. The piston pin is usually set as near to the head end of the piston as possible, leaving just room enough for the piston rings beyond the piston pin. The object of thus locating the piston pin is to make the engine as low as possible, and, in the case of the two-cycle engine, to reduce the size of the crank-case so as to give a higher compression in the latter.

In two-cycle engines, the shape of the top of the piston is very important, particularly if the transfer port is located in the side of the cylinder. The part of the piston that projects upwards, as shown at *a*, Fig. 22 (*a*), and that deflects the incoming charge of gas so that it clears the cylinder of the burned gases, is called a *deflector*, or *baffle*. Instead of using such a projection, the piston is in some cases so shaped as to deflect the gases in the same manner; such a piston is shown in (*b*).

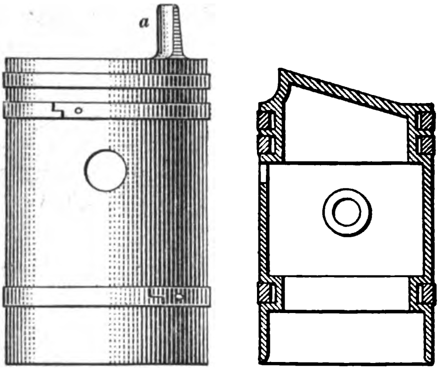

(*a*) (*b*)

FIG. 22

38. The piston of a two-cycle engine is made longer than the stroke, because otherwise the exhaust port would not remain completely covered during the compression stroke and the gas in the crank-case would escape to the atmosphere. In three-port, two-cycle engines, a piston ring is placed at the lower end of the piston to prevent the fresh charge in the crank-case from escaping past the piston and out of the inlet port. Such rings are shown in Fig. 22.

PISTON RINGS

39. On account of the mechanical impossibility of making a solid piston so that it will have an air-tight and at the same time a free-running fit in the cylinder under the conditions met in automobile practice, elastic, expansible **piston rings** made usually of close-grained, gray cast iron, are used to make a tight joint. For this purpose the piston is grooved and rings of the form shown in Fig. 23 are sprung, or snapped, into the grooves. These rings are commonly called *snap rings*. They are split, or cut, in two on one side so that they may have an expansive elastic action to press them close against the cylinder walls. Piston rings are made of such diameter that they press lightly against the wall throughout their entire circumference. The joints in the ring where it is split are made in several different forms, some of which are illustrated in Fig. 23.

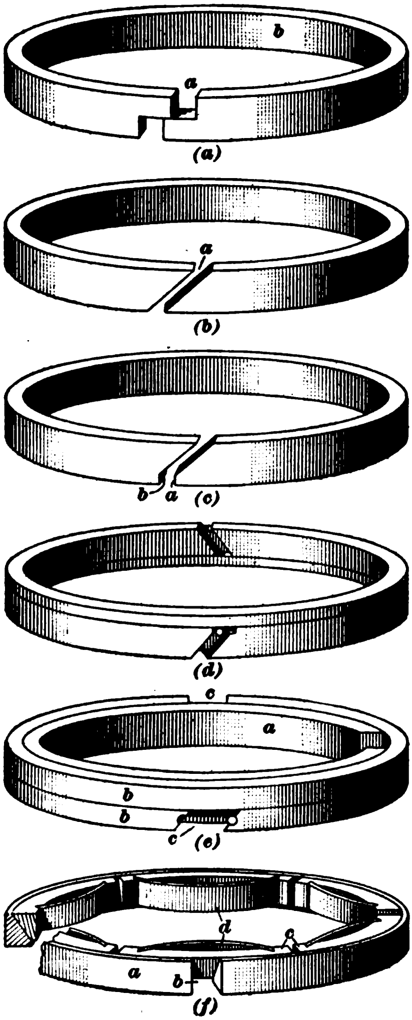

FIG. 23

40. The piston ring shown in Fig. 23 (*a*) is of uniform cross-section, with the ends lapped at the parting, as shown at *a*. The type of ring is frequently made eccentric; that is, thinner at the ends than at the back *b*. The parting in the ring shown in (*b*) is a diagonal split, as shown at *a*; it is less liable to cut or scratch the cylinder than the one shown in (*a*), as no part of its parting line is parallel with the motion of the piston. The parting of the ring shown in (*c*) is also diagonal, but it differs from that shown in (*b*) by having the point *a* made square and a notch *b* milled in the opposite corner of the other end, thus forming a rectangular space between the ends of the ring. Into this space fits a pin that holds the ring in place in the groove. A two-piece concentric ring is shown in (*d*). One ring is placed within the other, and each ring has a flange that extends over the other, closing each opening. This form of ring is known to the trade as the *leakproof ring*. A composite ring of the type shown in (*e*) is used in the Marmon engine. This ring consists of a heavy, plain, wide ring *a*, on the outside of which are two thin rings *b* broken at *c* on opposite sides and pinned, as shown, quartering the break in the inner ring. The office of the heavy inner ring *a* is to produce the expansive force, while the thin outer rings conform perfectly to the shape of the cylinder. In (*f*) is shown a sectional piston ring used in some Chalmers engines. It consists of an outside ring *a*, which is parted at *b*, and six inner segments *c*, each of which is provided with a flat spring *d*. When the ring is placed in its groove, the springs force it outwards against the cylinder wall. The outer ring and the inner segments are of triangular cross-section; hence, when the springs expand the segments, they tend to slide on the outer ring and fill up the groove endwise.

41. Sometimes an additional ring is placed near the open, or crank, end of the piston. Rings placed in this position are generally called *oil rings*. They are supposed to aid in distributing the lubricating oil over the surface of the cylinder bore, and also to regulate the amount of oil that passes up from the crank-case into the combustion chamber. In order to accomplish this regulation, they are made in different forms to meet the conditions under which the engine operates with regard to the amount of lubricant that is splashed, or thrown, into the open end of the cylinder. In some cases, they are made with true cylindrical surfaces, in the same manner as the other rings. In other cases, the outer surface of the ring is beveled part way across the surface and the ring is put in place with the beveled side either toward the open end of the piston or away from this end, according to whether the desire is to have the ring allow more or less oil to pass by it than in the case of a ring with a true cylindrical outer surface. The oil rings also aid in making an air-tight joint and thus in preventing loss of pressure due to blowing of the gases past the piston. However, oil grooves are used more extensively than oil rings for distributing the lubricant over the surface of the cylinder walls.

CONNECTING-RODS

42. Connecting-rods for automobile engines are usually made of drop-forged steel and are of I-beam cross-section. The lower, or crank-shaft, end of the connecting-rod is made large and contains a bearing for the crankpin; the upper end is smaller and either forms a bearing for the piston pin or is rigidly secured to it.

43. A common type of connecting-rod is shown in Fig. 24 (*a*). It is of I-shaped section, the large end *a* being split at right angles to the rod through the center of the bearing and having a bronze or other bearing-metal lining *b*. The two parts of the bearing are held together by the bolts *c* and *d*, which pass through the cap *e*. The bolts are provided with castellated, that is, slotted nuts, and cotter pins passing through the bolts and nuts, to prevent the latter from loosening. The smaller, or piston-pin, end *f* is forged solid, then bored out, and a

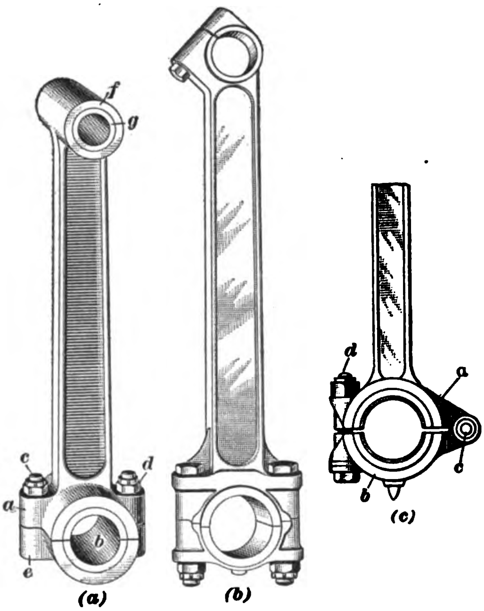

(*a*) (*b*) (*c*)

FIG. 24

bearing metal bushing, usually of bronze, pressed into place, as shown at *g*.

A connecting-rod designed so that the small end may be clamped to the piston pin is shown in (*b*). The piston-pin end is split in the manner shown, a heavy capscrew being used to draw the parts tightly against the piston pin, which turns in bearings in the piston casting. The head end forms the usual crankpin bearing, the halves of which are held together by two bolts. In some cases the halves of the lower connecting-rod bearings are held together by means of four bolts instead of by two.

Fig. 24 (*c*) shows a hinged crankpin end that is sometimes used on connecting-rods of automobile engines. The end *a* and the cap *b* are hinged at *c*, and a bolt *d* is provided to hold the parts together.

In the more expensive engines, the piston pin and the bushing are often made of case-hardened steel, and both pin and bushing are ground to fit.

CRANK-SHAFTS

44. Crank-shafts for automobile engines are made of special grades or alloys of steel, so that they may be as light as possible and yet be strong enough to resist the twisting and bending action to which they are subjected, the bearing part being made sufficiently ample to withstand the wear due to continuous rotation at high speed. Automobile-engine crank-shafts are always made in one piece, and are either machined from a rough flat forging or drop-forged in dies.

45. Crank-shafts for four-cylinder engines are supported by two, three, or five bearings. A two-bearing crank-shaft is shown in Fig. 25 (*a*); a three-bearing shaft, in (*b*); and a five-bearing shaft, in (*c*). In each case the journals that turn in the bearings are shown at *a*, and the crankpins at *b*. Crank-shafts for four-cylinder, four-cycle engines are always made in one of the three forms shown; that is, with the two outer crankpins in line and the two inner crankpins in line, so that the two pairs of crankpins are 180° apart.

Crank-shafts for six-cylinder engines are supported by three, four, or seven bearings. That shown in Fig. 25 (*d*) is a four-bearing crank-shaft, and that shown in (*e*) is carried on seven bearings. In each case, the journals are shown at *a* and the crankpins at *b*. The cranks are arranged in pairs, one and six forming a pair, two and five forming a pair, and three and four forming a pair. The crankpins of each pair are in line, and the pistons connected to these cranks move in unison; the several pairs of crankpins are 120° apart. In the four-bearing crank-shaft, illustrated in (*d*), each end crank is connected to the adjoining crank by means of a *dummy journal;* in some other cases, the two crankpins are directly connected by a single straight arm.

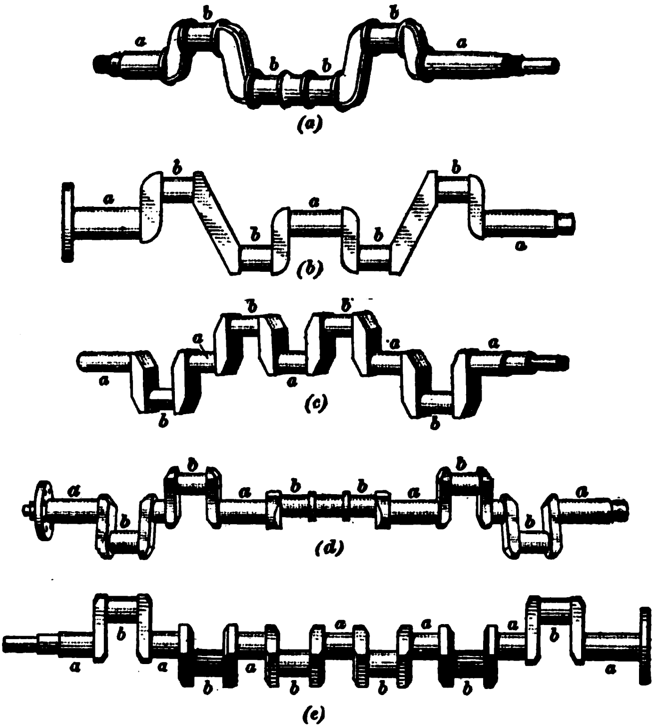

FIG. 25

VALVES AND VALVE MECHANISM

VALVES

46. A **poppet valve** consists of a disk with a stem at right angles to the plane of the disk. Poppet valves are used for the admission of the charge and the control of the exhaust. The valves open in the direction of the axis of the stems, and are held to their seats by springs. As they open inwards, they have no tendency to leave their seats during the explosion, the pressure in the cylinder helping to keep them on their seats. The valve seats and valve-stem guides may be located in removable heads or in the cylinder casting.

The valve seats are usually made of cast iron. Nickel steel, and of late, tungsten steel, has become quite popular for valves when the head and stem are made in one piece; nickel steel is also used extensively for the heads of built-up valves having the stems made of machinery steel. It is claimed that valves made of nickel steel will neither warp nor scale from excessive heat; in addition, valves made of tungsten steel seem to be free from pitting. Cast-iron exhaust valves having steel stems are sometimes used, and also soft steel valves faced with cast iron welded to the head.

The valve seats are occasionally flat, though more frequently they are beveled to an angle of 45°. The bevel-seat type of valve is kept tight more easily than the flat-seat type, and for this reason it is generally used.

47. A valve that is opened by mechanical force applied by rigid parts is called a *mechanical valve*, or, less commonly, a *mechanically operated valve*. An exhaust valve of the poppet type must always be mechanically operated, because it must be lifted against the pressure in the cylinder at the time the exhaust is to begin.

The inlet valve, however, can be so constructed as to be opened by the pumping action of the piston during the suction stroke. When thus opened it is known as an *automatic inlet* *valve;* such valves were formerly used extensively on automobile engines, but they are now employed in only very rare instances.

48. A mechanically operated inlet valve is shown in place on its seat in Fig. 26. The disk *a* rests on the beveled seat *b* and the stem *c* extends downwards through the guide *d* to the *adjusting screw e*, which is not a part of the valve stem, however. The valve spring *f* is held in compression between the guide *d* and the cap *g*, which is held in place by a collar *h* with a radial slot that fits in a groove around the stem *c*. As the cam *i* turns so that its lobe is directly under the *valve lifter j*, the valve is raised against the compression of its spring and an opening is formed between the edge of the valve and the seat. The valve lifter *j* by suitable means is prevented from turning in the *valve-lifter guide k*, and can be adjusted by screwing the adjusting screw *e* up or down. A locknut *l* prevents the adjusting screw from turning out of adjustment. In the center of the top of the valve disk is a slot to receive the end of the tool used when grinding the valve. Frequently the spring cap is held in place by means of a key that passes through a hole in the valve stem, instead of by a slotted collar.

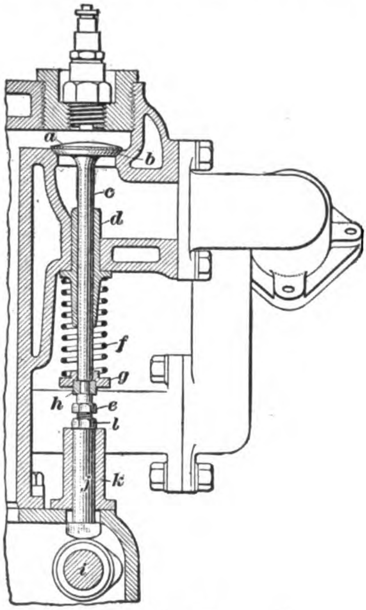

FIG. 26

49. The Knox engine inlet and exhaust valves, which are of the flat-seat type, are shown in place in the cylinder head in Fig. 27. The valve disk *a* rests against the flat seat *b* when the valve is closed. These valves open downwards into the combustion chamber and are operated by means of the rocker-arms *c*, which, in turn, are operated by means of long push rods. The valve stem moves in the guide *d*. Between a shoulder *e* on the guide and a cap *f*, which is screwed on the end of the valve stem, the spring *g* is compressed and therefore holds the valve to its seat. The rocker-arms act against adjusting nuts *h* on the end of the valve stem. The cylinder head is shown cut in half in the illustration so as to show the valves in place. In this engine, the cylinder head is cast separate from the cylinder.

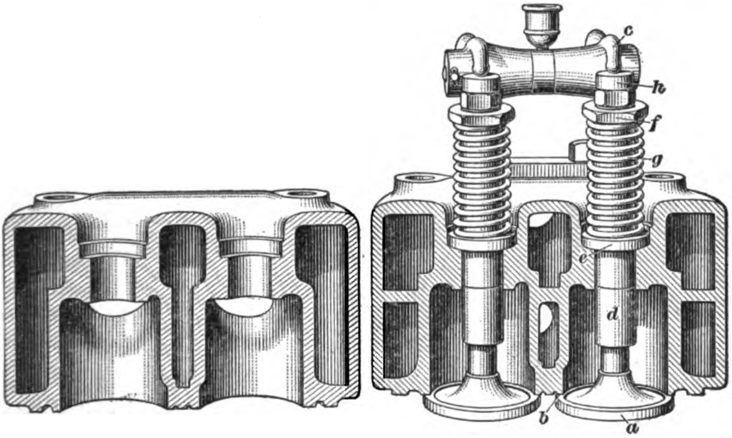

FIG. 27

VALVE MECHANISM

50. Valve springs are usually made from steel spring wire or from soft cast-steel wire, the former being wound cold and not requiring any heat treatment; when the soft wire is used, the spring is hardened and tempered after it is formed. Springs made from spring wire have the disadvantage of becoming set if subjected to hard usage, and hardened and tempered springs are liable to break if not tempered just right.

Helical springs, or springs wound in the form of a screw thread, as shown at *g*, Fig. 27, are used more often than any other on automobile engines. Occasionally, the springs on inlet and exhaust valves are made up in the shape of a cone. Such springs are called *cone-shaped springs*.

51. The **cams** for operating the valves of an automobile engine are usually forged integral with the *cam-shaft*, as shown in Fig. 28. In a few cases, however, they are made separate and secured to the cam-shaft by means of tapered pins.

Cams vary considerably in shape, or profile, the outline depending to some extent on the type of *cam-follower*, which is the part of the valve-lifting mechanism that is in contact with the cam. An inlet-valve cam designed to be used with a roller follower is shown in Fig. 29 (*a*), and the corresponding exhaust-valve cam is shown in (*b*). Another common form of cam, also used with a roller follower, is shown in (*c*). In (*d*) is shown a cam having rising and falling shoulders *a* and *b* of convex form, giving a gradual opening and closing. This form of cam is used with a mushroom, or flat-bottomed, cam-follower.

FIG. 28

52. If the inlet and exhaust valves of an automobile engine are located in the sides of the cylinders, they are usually operated directly from cams acting on **valve lifters**, which are placed between the cams and the valve stems. There are various designs of valve lifters; some are flat where they rest on the cams, others are rounded off, and still others are provided with rollers at the bottom end. The majority of makes of valve lifters are provided with some means of adjusting their length; usually an adjusting screw is placed in the upper end.

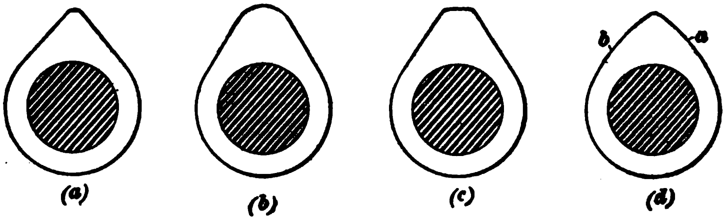

FIG. 29

53. A simple form of valve lifter is shown in Fig. 30 (*a*). It consists of the solid cylindrical part *a*, which has a flat lower end *b*, thus forming a large bearing surface for the cam. The upper end of the valve lifter supports the valve stem *c*. No means of adjustment is provided for this lifter, but the valve stem *c* may be lengthened by drawing it out as shown by the dotted lines *d*. The valve lifter shown in this view is used on the Ford, model T, engine.

Another simple form of valve lifter is that shown in view (*b*). It is used on the Maxwell four-cylinder, 25-horsepower engine. The entire lifter is made of pressed steel. The body *a* is cup-shaped and is pressed with square corners at the bottom, thus forming a large flat contact surface for the cam. The top part *b* of the lifter is threaded and screws into *a*; hence, the length can be adjusted by turning the squared end *c*. A locknut *d* is provided to prevent the part *b* from jarring out of adjustment.

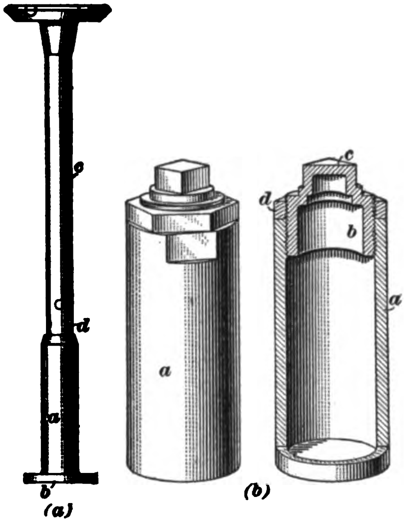

FIG. 30

54. A valve lifter of the rounded type is shown at *j*, Fig. 26. Instead of being fitted with a roller or having a flat contact surface, the lower end of the lifter is made rectangular in shape and rounded off. With a lifter of this type, some means must be provided for preventing it from turning in its guide and getting out of alinement with the cam. In the example shown, the guide *k* is slotted and the rectangular part of the lifter extends into the slots, thus keeping it in line with the cam.

55. The roller type of valve lifter, several forms of which are shown in Figs. 31 to 33, is very extensively used.

Two adjacent lifters used on the Northway engine are illustrated in Fig. 31, which shows an external view of one and a sectional view of the other. On account of operating different valves, these lifters are in different positions, but they are exactly alike and similar parts are lettered the same in the two views. The body *a* of the lifter is slotted at the lower end to receive a roller *b*, which is carried by the pin *c*. The roller is kept parallel with the cam by means of a slot *d* in the guide *e*, into which the roller extends. As the valve lifter is raised and lowered by the cam, the roller is guided by the slot in the guide and hence does not move from its correct position on the cam. This valve lifter is made adjustable by means of the adjusting screw *f*, which can be screwed up or down as required. The locknut *g* prevents the screw *f* from being jarred out of adjustment. Washers *h* and *i* are placed between the nut *g* and the upper end of the lifter. The guide *e* is held in place by the flange formed on it, which is clamped between the cylinder casting and the crank-case.

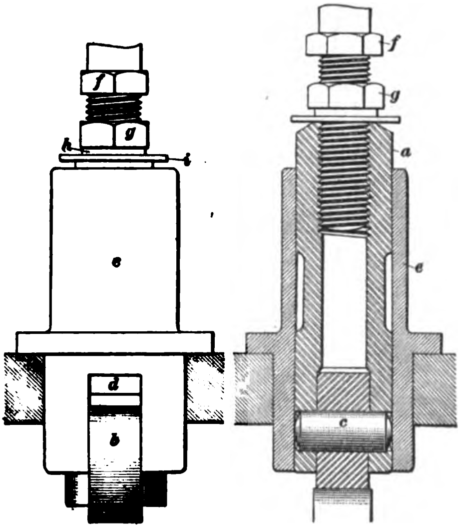

FIG. 31

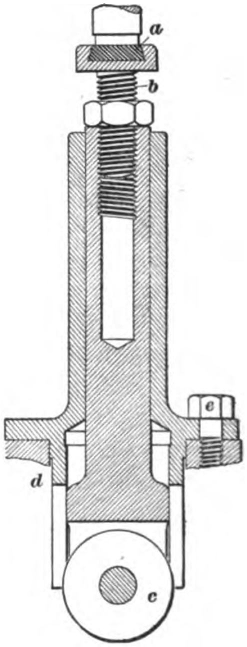

FIG. 32

56. Another valve lifter that operates on the same principle as the lifter just described is shown in longitudinal section in Fig. 32. An important feature of this lifter is that a fiber block *a* is set in the upper end of the adjusting screw *b* to deaden the sound produced by the end of the lifter striking the end of the valve stem. The roller *c* moves up and down in the slotted guide *d*, which prevents it from coming out of alinement with the cam. The guide is made of bronze, and is held in place by stud bolts *e*. This type of lifter is used on the Pierce-Arrow engine.

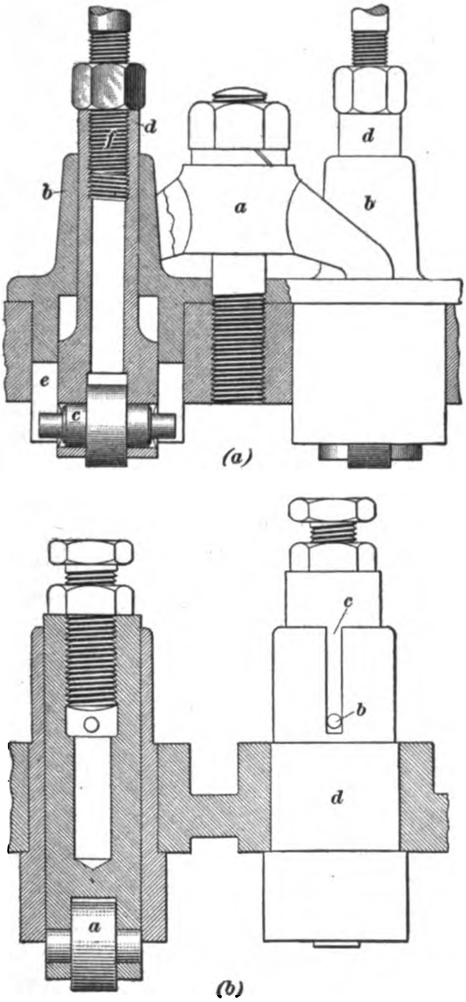

(a)

(b)

FIG. 33

57. In Fig. 33 (*a*) is shown the valve lifter used on the Buick engine. It differs slightly from the preceding. Two adjacent lifters are shown with the yoke *a* in place for holding the guides *b* in position. In this form of valve lifter, the ends of the roller pin *c* extend beyond the lifter *d* and work in narrow slots *e* in the guide *b*, thus keeping the roller in alinement with the cam. The lifter is made hollow in order to lighten it and to receive the end *f* of the push rod, which in this case is used to operate overhead valves.

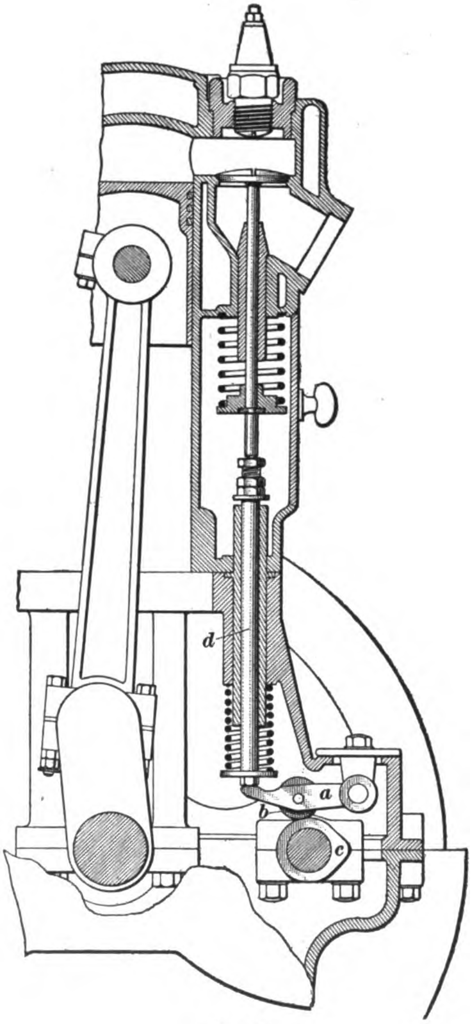

FIG. 34

Two adjacent valve lifters used on the Beaver engine are shown in different positions in Fig. 33 (*b*). In this lifter, the roller *a* is held parallel with the cam by means of a pin *b* that passes through the lifter and extends into slots *c* in the guide *d*. Adjustment is made by means of the common form of adjusting screw and locknut. The guide is held in place by the cylinder casting and the crank-case.

58. In some engines it is the practice to make use of a **cam-lever** placed between the cam and the end of the valve lifter, as shown at *a*, Fig. 34. The purpose of this lever is to eliminate, as far as possible, the side thrust on the valve lifter. The lever is hinged at one end and carries near its middle a roller *b* that follows the cam *c*. The side thrust of the cam is therefore taken by this roller and by the lever *a*, and is not transmitted to the lifter *d*. The lever is so arranged that it it is at right angles to the lifter when the valve is raised half way. The type of cam lever here illustrated is used in the Rutenber motor.

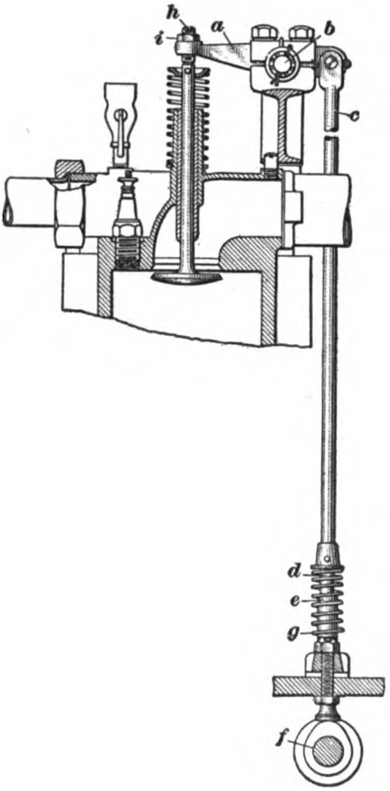

Fig. 35

59. Poppet valves located in the cylinder head and opening downwards are operated by means of tappet rods and levers, as shown in Fig. 35, which illustrates the method used in the engine of the Franklin car. The lever *a* is pivoted at *b* and is operated by means of the tappet rod *c*. The rod *c* is raised by means of a lifter *d* that moves in a guide *e* and that in turn is raised by the cam *f*. A spring *g* at the base of the tappet rod keeps the lever *a* constantly in touch with the valve stem and prevents clicking. The mechanism is adjusted by means of an adjusting screw *h*, which is prevented from backing out by the locknut *i*. The tappet rod is yoked at its top end and fits over the end of the lever *a*.

In modern engines, the valve stems and springs are covered by a removable housing, excepting in case of overhead valves.

60. Three methods of driving the cam-shaft and the circulating pump and magneto shafts are illustrated in Figs. 36 to 38. Gears or silent chains, or a combination of both, are located at the forward end of the engine, and they connect the crank-shaft with the various auxiliary shafts. The gears or chains are enclosed in a casing, one part of which is usually cast integral with the crank-case. The front part is made in the form of a cover-plate and is removable.

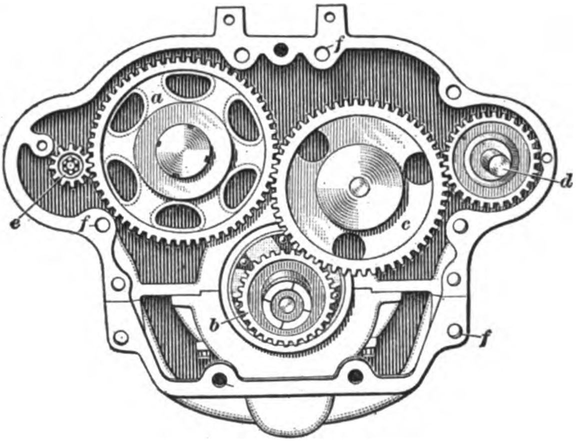

FIG. 36

61. Fig. 36 shows the timing gears used on the White 40-horsepower engine. The cam-shaft gear *a* is driven from the crank-shaft gear *b* through the idler *c*. Gear *a* has a diameter

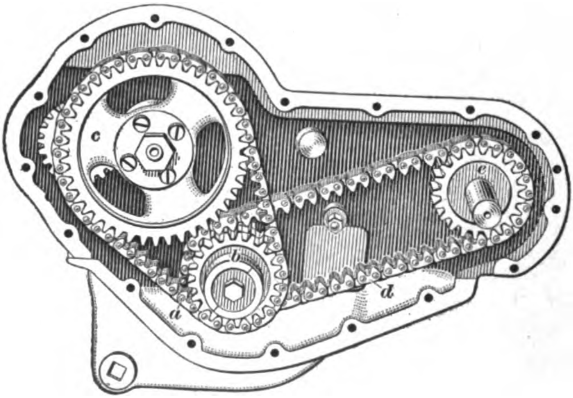

FIG. 37

that is twice that of *b*; hence, its speed is one-half that of the crank-shaft, as is required for a four-cycle engine. The magneto shaft *d* is also driven through the idler and rotates at crank-shaft speed. The pump shaft is driven by the small gear *e*, which meshes with the cam-shaft gear *a*. Helical gears are used in order to eliminate noise as much as possible. The removable cover is attached by capscrews and bolts that pass through the holes *f*.

In Fig. 37 is shown the silent-chain drive arrangement used on Cadillac engines. The cam-shaft is driven at one-half crank-shaft speed by the silent chain *a* running on sprockets *b* and *c*, and the motor-generator and circulating-pump shaft is driven by the chain *d* running on the sprockets *b* and *e*. The motor-generator is an electrical machine used for cranking the engine and lighting the car.

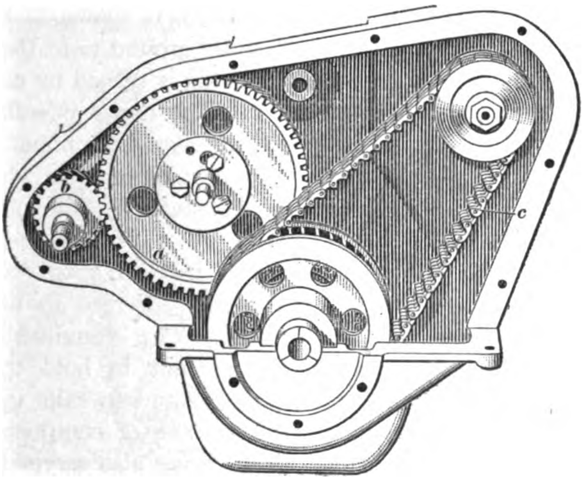

FIG. 38

A combination drive consisting of helical gears and a silent chain is shown in Fig. 38. The cam-shaft is driven from the crank-shaft by a gear *a* that meshes with a gear on the crank-shaft. The magneto shaft is driven by the gear *b* meshing with the cam-shaft gear. A silent chain *c* connects the crank-shaft with the electric starting device shaft. This chain also drives the circulating pump and the commutator shaft. The cover is fastened on by means of capscrews. This arrangement is used on engines built by the Continental Motor Company. The chain *c* is lubricated by running in a bath of oil.

ENGINE FITTINGS AND ENGINE RATING

PRIMING CUPS

62. A cock by means of which an engine may be primed by pouring fuel into the combustion chamber, and which may also be used to relieve the compression, is shown in Fig. 39. It consists of a circular plug *a* carefully ground to fit the tapering, or conical, socket in which this plug is turned by means of the handle *b*. The cup *c* is sufficiently large to hold the required amount of gasoline for the priming charge when the engine is to be started. The plug *a* is held in place by a phosphor-bronze spring *d* placed between two washers *e* and *f*, and a pin *g* serves to hold the whole together. The tension of the spring *d* is sufficient to hold the plug firmly in position and to take up wear, thus preventing loss of compression by leakage. The spring also serves to keep the plug tight under heavy vibration. In using this plug, the gasoline for priming is poured into the cup *c* and the cock *a* is turned so as to permit the gasoline to flow into the cylinder either before the engine is started or during the suction stroke.

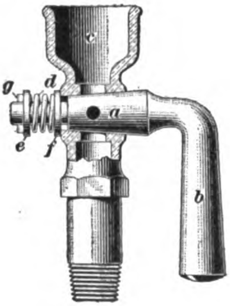

FIG. 39

Priming cups are also used for introducing kerosene or any other similar substance into the cylinders for the purpose of keeping down carbon deposits.

AIR-PRESSURE PUMPS

63. When the gasoline tank is located at a relatively low point on the automobile, as, for instance, at the rear of the frame and below the body line, the gasoline is forced to the carbureter by means of pressure maintained in the tank. This pressure in most cases is produced either by a hand-driven pump or by a power-driven pump that is driven from the engine.

64. Two engine-driven air pumps are illustrated in Fig. 40. A perspective view of the air-pressure pump used on the Northway motor is shown in (*a*). The cylinder *a* is of cast iron and is bolted to the side of the crank-case by means of the flange *b*. The piston *c* is operated by one of the exhaust-valve cams, which bears against the follower *d*. The follower is kept in contact with the cam by the spring *e*. As the cam rotates, the piston moves in and out of the cylinder *a*. When the piston uncovers the ports *f* drilled in the cylinder wall, air is taken in, and as the cam rotates the piston is forced inwards, compressing the air and driving it out of the delivery pipe *g*. An adjustable check-valve is located at *h*, and the amount of pressure carried in the gasoline tank may be varied by screwing this adjustment in or out, as may be required.

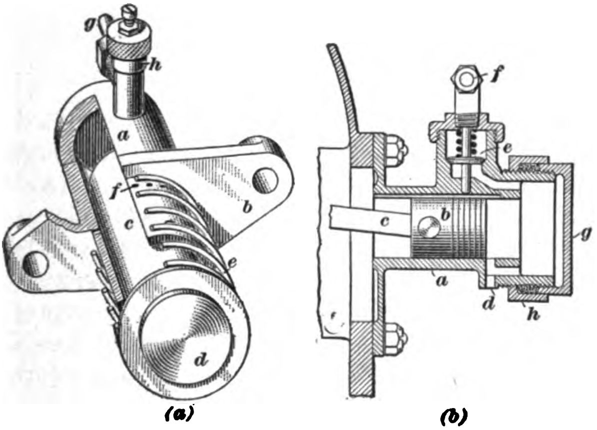

(*a*) (*b*)

FIG. 40

65. A cross-sectional view of the air pressure pump used on the Stearns-Knight engine is shown in Fig. 40 (*b*). The cylinder *a* is bolted to the crank-case, as shown, and the piston *b* is driven through the connecting-rod *c* from one of the sliding-sleeve connecting-rods of the engine. On the outward, or suction stroke of the piston *b*, the air enters the cylinder *a* through a groove at the top, and on the inward, or compression, stroke the air is forced out through check-valve *e* and outlet pipe *f*. The pressure to which the air is compressed may be varied by screwing the adjustable head *g* in or out, as desired. The head is kept in any adjustment by means of the locknut *h*. A plug is screwed into the opening shown at *d*, and is removed to drain excess oil from the cylinder.

The pressure to which these pumps compress the air is generally from ½ to 3 pounds, although it may be varied at will by means of the adjusting device.

HORSEPOWER RATING

66. Gasoline automobiles are rated in the United States according to the horsepower of the engine. This horsepower is calculated by means of a formula called the **A. L. A. M. formula** and also the **S. A. E. formula,** which is so named because it was adopted by the Association of Licensed Automobile Manufacturers and afterwards by the Society of Automobile Engineers for calculating the rated horsepower of a four-cycle gasoline automobile engine. The formula does not give the exact power delivered under every condition nor the exact theoretical horsepower, but it offers a means of comparison between different engines. It is based on a piston speed of 1,000 feet per minute, an average pressure in the cylinder of 90 pounds per square inch of piston area, and a mechanical efficiency of 75 per cent. The A. L. A. M. formula is as follows:

$$\text{H. P.} = \frac{D^2 N}{2.5},$$

in which H. P. = horsepower;
D = cylinder diameter, in inches;
N = number of cylinders.

Expressed in words, the horsepower of a four-cycle gasoline automobile engine is equal to the diameter of the cylinder, in inches, multiplied by itself and by the number of cylinders, and the product divided by 2.5.

For example, the rated horsepower of a four-cylinder, four-cycle engine having a bore of 5 inches may be found by this formula as follows:

$$\text{H. P.} = \frac{D^2N}{2.5},$$

in which $D = 5$;

$N = 4$.

Therefore

$$\text{H. P.} = \frac{5^2 \times 4}{2.5}$$

$$= \frac{25 \times 4}{2.5}$$

$$= \frac{100}{2.5} = 40$$

Hence, the horsepower of the engine is 40.

For two-cycle engines, the horsepower may be taken as approximately 1.65 of that of a four-cycle engine of the same dimensions calculated by the formula just given. From the fact that there are twice as many explosions per minute in the cylinder of a two-cycle engine as in the cylinder of a four-cycle engine running at the same speed and having the same dimensions, it might be supposed that the power developed would also be twice as great instead of about 1.65 times as great. However this is not the case because of certain features of the two-cycle engine that tend to lower its horsepower output and cause it to vary more than that of the four-cycle engine. These are, usually, lower compression and lower mean effective pressure due to inefficient scavenging, or cleaning, of the cylinders after each working stroke. There are, of course, exceptional cases where the output of a two-cycle engine is nearly twice that of a four-cycle engine of the same dimensions but the ratio given is usually considered as the average.

67. The horsepower of four-cycle engines having from one to six cylinders and a bore varying from 2½ inches to 6 inches, as computed by the A. L. A. M. formula, is given in Table I.

TABLE I

HORSEPOWER BY A. L. A. M. FORMULA

Bore		Horsepower			
Inch	Millimeters	One Cylinder	Two Cylinders	Four Cylinders	Six Cylinders
2½	64	2.5	5.00	10.00	15.00
2⅝	68	2.81	5.61	11.23	16.83
2¾	70	3.02	6.04	12.08	18.13
2⅞	73	3.34	6.68	13.37	20.00
3	76	3.60	7.20	14.40	21.60
3⅛	79	3.92	7.83	15.64	23.50
3¼	83	4.22	8.45	16.92	25.39
3⅜	85	4.56	9.12	18.21	27.30
3½	89	4.91	9.82	19.61	29.45
3⅝	92	5.27	10.53	21.08	31.57
3¾	95	5.62	11.25	22.50	33.75
3⅞	99	6.05	12.11	24.22	36.32
4	102	6.40	12.80	25.60	38.40
4⅛	105	6.80	13.60	27.20	40.80
4¼	108	7.25	14.50	29.00	43.50
4⅜	111	7.65	15.32	30.65	46.00
4½	114	8.10	16.20	32.40	48.60
4⅝	118	8.57	17.14	34.28	51.41
4¾	121	9.05	18.10	36.15	54.20
4⅞	124	9.55	19.12	38.25	57.21
5	127	10.00	20.00	40.00	60.00
5⅛	130	10.55	21.10	42.20	63.30
5¼	133	11.04	22.10	44.20	66.40
5⅜	137	11.59	23.18	46.34	69.50
5½	140	12.12	24.24	48.48	72.72
5⅝	143	12.68	25.38	50.80	76.10
5¾	146	13.25	26.50	53.00	79.50
5⅞	149	13.81	27.62	55.28	82.88
6	152	14.42	28.53	57.70	86.64

AUTOMOBILE-ENGINE AUXILIARIES

COOLING, MUFFLING, AND GOVERNING

COOLING SYSTEMS

INTRODUCTION

1. In an internal-combustion engine, unless provision were made for cooling, the heat from the explosion of the charge would raise the temperature of the cylinder walls and piston so high as to render lubrication impossible. The devices employed for cooling purposes comprise what is known as the **cooling system** of the automobile.

Most automobile engines are cooled by circulating water through the space between the outer wall of the cylinder and a jacket casing that surrounds the cylinder head and the part of the cylinder barrel nearest the head. Air is used for cooling in only a comparatively small proportion of automobile engines.

About the only objection to the use of water for cooling is that it is liable to freeze in cold weather. In order to overcome this objection, however, various substances are added to the water or dissolved in it so as to form a mixture that will not freeze until the temperature is considerably below that at which pure or nearly pure water freezes.

2. When water is used for cooling, it enters the jacket space generally either at its lowest part, or just below the exhaust valve, and flows out at the highest part. It is extremely important to have the water flow from the highest part of the jacket space, because an air pocket or steam pocket would be formed if a part of the enclosed space were higher than the outlet. It is also very important that the jacket space should be shaped so that there is no part from which the water cannot flow upwards toward the outlet.

The hot water from the jacket passes through connecting pipes to a *radiator*, where it is cooled, and from the radiator it passes back to the jacket space of the engine again. It then repeats its cycle of cooling the engine and being cooled in the radiator. Circulation is maintained either by a pump, which forces the water through the system, and which on this account is called a *forced-circulation system*, or by what is known as *thermal circulation*, which means circulation due to the heating of the water.

WATER COOLING

3. Forced-Circulation Cooling System.—In Fig. 1 is shown the water-cooling system of the Studebaker "20" car, which system serves well to illustrate the typical arrangement of the cooling-system parts in automobiles using monobloc cylinder castings, and having the engine at the forward end of the car, as is now the universal practice. In order to show the cooling system clearly, part of the water-jacket is broken away and the radiator, as well as the pump, is illustrated in section. The cooling water passes from the top of the water-jacket *a* surrounding the upper end of the four cylinders through a flexible hose connection *b* to the upper tank *c* of the radiator; it then passes downwards through the radiator tubes *d*, which are surrounded by horizontal fins soldered to them, to the bottom tank *e* of the radiator. This bottom tank *e* is connected by a pipe, which cannot be seen in the view given, to the casing of the circulating pump *f*, which pump is driven from the engine cam-shaft and delivers the cooling water through the pipe *g* to a manifold *h* attached to the bottom of the water-jacket. This manifold has two outlets into the water-jacket in order to insure a better distribution of the cooled water than is possible with a single outlet. The fan *i*, which is rotated at a high speed by the engine, draws air over the tubes *d* of the radiator and their surrounding fins, thereby abstracting heat from the cooling water; that is, cooling it.

4. With an engine having monobloc cylinders, as shown in Fig. 1, a single outlet from the top of the water-jacket is usually sufficient. When the engine has individual cylinders or twin cylinders or triple cylinders, there must be a manifold to convey the cooling water to and from the water-jackets of the cylinders. This is clearly shown in Fig. 2, which illustrates the water-cooling system of a six-cylinder Packard car. In the engine of this car, the cylinders *a* are cast in groups of two; hence, there are three top outlets *b* from the water-jackets, the outlets being connected to each other by hose connections *c* and finally to the top of the radiator *d* by a hose connection *e*. Instead of connecting the outlets from the top of the water-

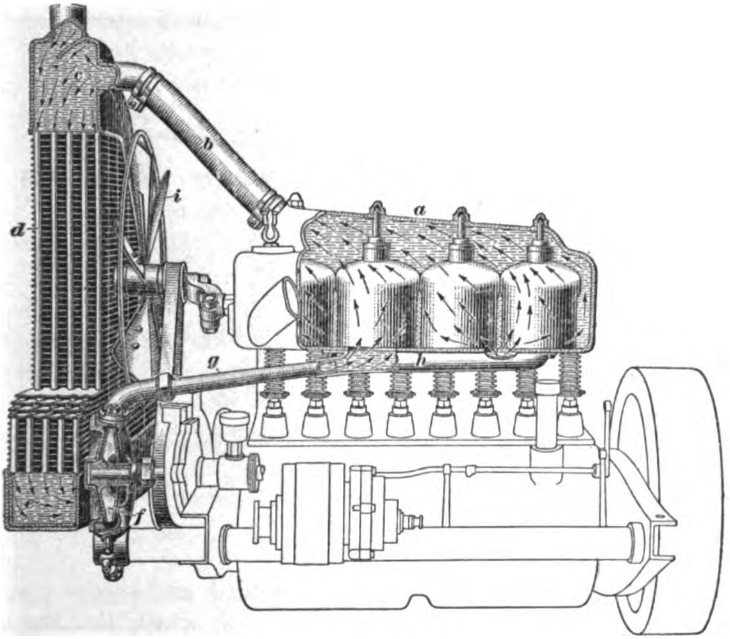

FIG. 1

jackets with rubber hose, as is done in the Packard engine illustrated, many manufacturers use a metallic manifold with the piping and outlets cast or otherwise formed as a single piece; the final connection to the radiator is made with a rubber hose, however.

The hot water coming from the top of the water-jackets flows through the upwardly inclined manifold into the top water tank of the radiator and passes downwards through numerous narrow water passages into the bottom water tank of the radiator, from which it passes through an elbow *f* and a hose connection *g* to a circulating pump *h* and thence past a hydraulic governor *i* to the manifold *j*, which has three branches, one leading to the bottom of the water-jacket of each cylinder casting. The hydraulic governor *i*, although inserted in the water-cooling system, has no connection with the cooling of the engine; its purpose will be explained in the proper place. In order to aid in cooling the water passing through the radiator, a fan *k* driven by a belt *l* from the engine draws air through the square openings between the water passages joining the top and bottom tank of the radiator. A drain cock *m* is placed at the lowest point of the water-cooling

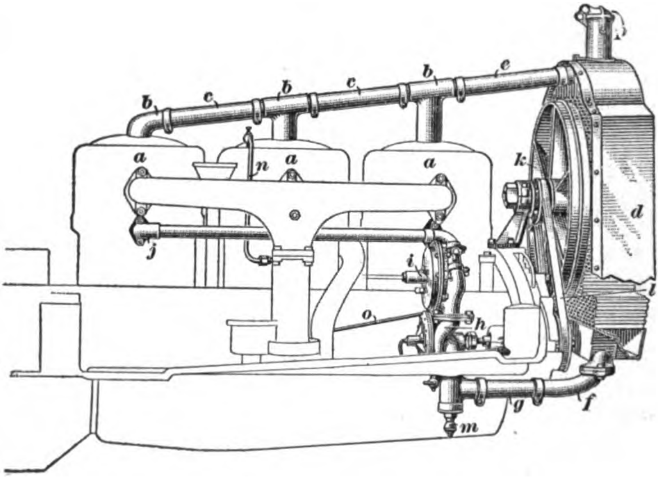

FIG. 2

system; when this cock is opened, all water can be drained from the system.

The carbureter used with the Packard engine here illustrated is water-jacketed in order to keep it warm and thus aid vaporization of the gasoline; hot water is taken from the cooling system through the pipe *n* from the top of the water-jacket of one pair of cylinders. This water cools somewhat in passing downwards through the carbureter jacket and is discharged through a pipe *o* into the engine-cooling system directly above the water-circulating pump *h*.

The water system of a water-cooled engine is filled through an opening on top of the radiator, and this opening, when not in use, is closed by a filler cap, as shown at *p*.

5. **Thermo-Siphon Cooling Systems.**—Although most automobile manufacturers seem to prefer to use the forced-circulation system of water cooling, there are some who use successfully the thermal system, or as it is better known, the *thermo-siphon system of water cooling*. This cooling system is characterized by the absence of a circulating pump, the circulation being established and maintained by heating the water to a higher temperature in the water-jacket of the cylinders than in the remainder of the cooling system. Inasmuch as hot water is lighter than cold water, it tends to flow upwards; conversely, cold water is heavier than hot water and tends to flow downwards.

6. The most widely known example of a thermo-siphon cooling system is found in all Ford, model T, cars having a manufacturer's number higher than 2,500. Cars of this model bearing a lower number were fitted with a forced-circulation system.

The radiator consists of an upper tank *a*, Fig. 3, and a lower tank *b* united by a large number of vertical tubes supplied with horizontal cooling fins. The water-jacket *c* surrounds the upper part of the four cylinders, which, together with the upper half of the crank-case, are a monobloc casting. The heated water passes from the water-jacket through the upwardly inclined connection *d* to the upper tank *a* of the radiator, flows downwards through the vertical tubes, where it is cooled by air passing over them, and drops into the bottom tank *b*, whence it flows upwards again through the connection *e* to the bottom of the water-jacket, taking the place of the heated water that flowed from the top of the water-jacket. A fan *f* located behind the radiator and driven by the engine draws air rapidly over the radiator tubes and thus assists the cooling of the water.

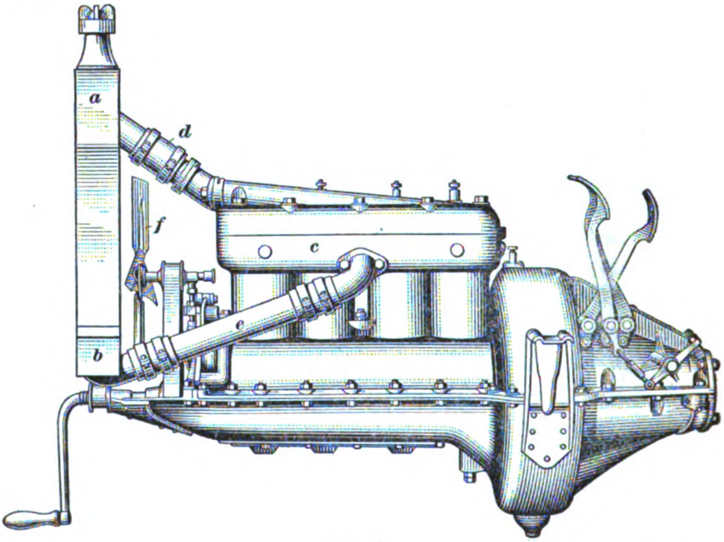

FIG. 3

7. The cooling system of the Overland car, model 71, also is of the thermo-siphon type. It is shown diagrammatically in Fig. 4. The engine is built with four individual cylinders; consequently, the water inlet pipe *a* conveying cool water from the bottom of the radiator *b* to the bottom of the water-jackets, as well as the water outlet pipe *c* conveying hot water from the top of the water-jackets to the top of the radiator, has four branches, one to each cylinder. The water circulation is brought about in the same manner as in the Ford car, and is shown by the arrows. A fan *d* driven by the engine assists the cooling of the water by drawing air through the radiator.

8. In the thermo-siphon cooling system employed first in the Renault car, which system has since been adopted by several other manufacturers, the radiator, instead of being placed on the chassis in front of the engine, is mounted back of the engine; that is, just in front of the dashboard. Three views of the Renault cooling system are shown in diagrammatic form in Fig. 5. The radiator *a* consists of the usual top and bottom tanks, which are united by numerous plain vertical tubes. The top of the cylinder water-jackets is connected to the top radiator tank by the manifold *b*; the bottom of the water-jackets is connected by the manifold *c* to the bottom radiator tank. Circulation of the cooling water is established and maintained in the manner explained in Art. **6.** The engine is enclosed by the hood *d*, which has sloping sides and a sloping top and front; this hood extends backwards to the radiator. The bottom of the engine is protected by the sod pan *e*, which, like the hood, is closed at the front end and open at the rear. No separate fan is employed to draw air through the radiator; the flywheel *f*, however, is cast with vanes on its outside, and these drive air to the rear. The circulation of air through the radiator is as follows: Air enters at the sides of the radiator, as shown by the arrows *g*, and also at the front through the part of the radiator that is not covered by the hood *d*, as shown by the arrows *h*. This air passes from both

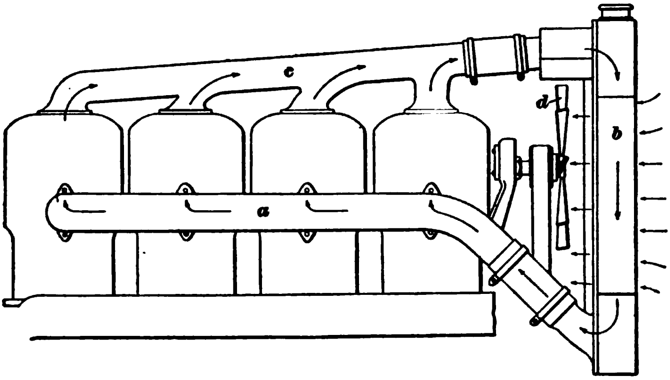

FIG. 4

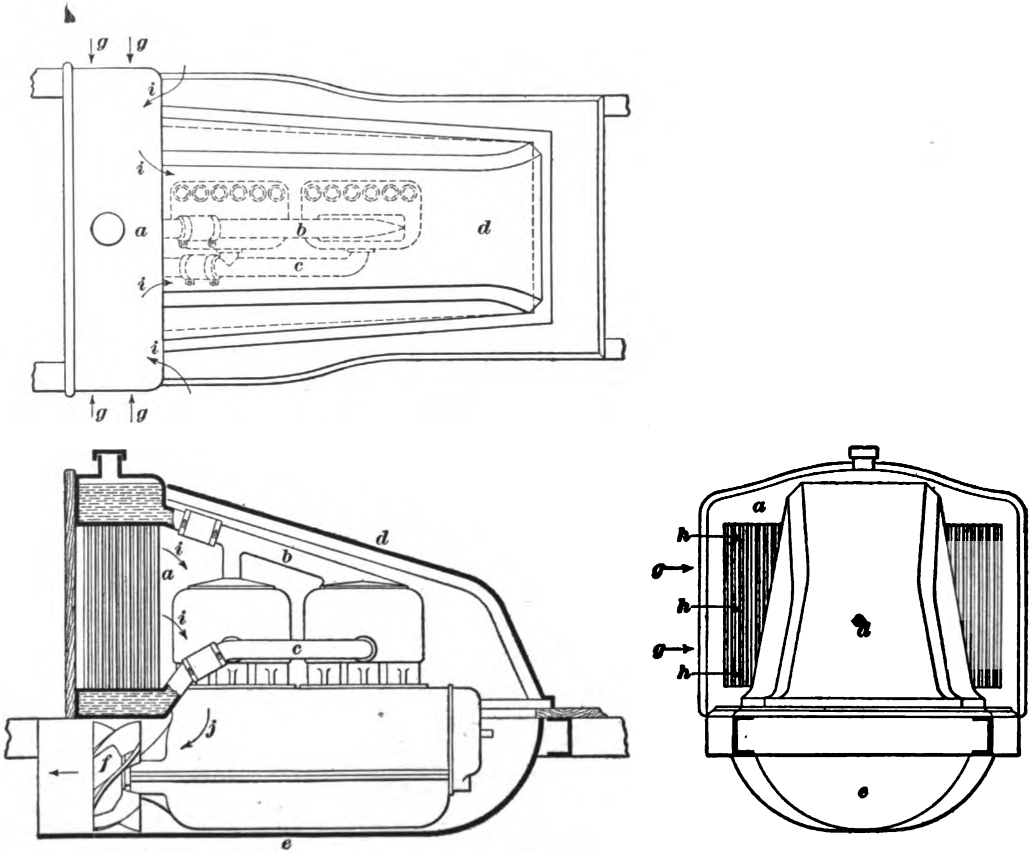

FIG. 5

sides of the radiator toward the central part covered by the hood and then forwards under the hood, as shown by the arrows *i*; the air then passes downwards under the hood, as shown by the arrows *j*, past the flywheel, and out at the rear of the sod pan, the circulation being kept up by the vanes of the flywheel.

9. In a thermo-siphon cooling system, the opening through which the water from the engine enters the upper radiator tank should not be located above its bottom. If this is done, the circulation will stop as soon as the level of the water falls below the bottom of the opening, even if a considerable amount of water is still retained in the tank and the upper ends of the cooling tubes are covered with water to a considerable depth. The proper place to connect the pipe coming from the top of the water-jacket is at the bottom of the upper tank, as shown in Fig. 3.

In all cases, the cooling system should not be air-tight, but should have an orifice or, *overflow*, above the normal level of the water to allow the escape of air, water, or steam. The water expands by heating, and in case it boils, steam is formed.

10. Types of Radiators.—As previously explained, the cooling water heated in the water-jackets of the engine is cooled by passing it through a radiator. In order to cool the water effectually, radiators are usually made of thin metal, with as much surface exposed to the air as possible, and they are arranged so that the air can circulate through them easily.

There are two general types of radiators, which are named in accordance with their construction. One of these types is spoken of as the *tubular radiator*, the cooling being done by passing the heated water through round or flat tubes around which air circulates to abstract heat and carry it away. The second type is known as the *cellular radiator*, from the general resemblance it bears to a mass of cells; in this type of radiator the water to be cooled surrounds the cells and the air that abstracts and carries away heat passes through the cells.

Radiators are always mounted at right angles to the frame of the car, and usually in front of the engine, although some makers mount them at the rear of it. As a general rule radiators are flat, but in some cases radiators, when viewed from above, are **V**-shaped, with the apex to the front, or are slightly rounded; such constructions are adopted only in order to give a distinctive appearance to the front of the car.

11. Tubular radiators nearly always have the tubes surrounded by a large number of thin fins, or gills, that are soldered to them, the object of these fins being to increase the radiating surface to an extent sufficient to produce satisfactory cooling of the water.

Radiators of the tubular type may be divided into two general classes; namely, (1) radiators in which each tube has its own fins, and (2) radiators in which the fins are common to all the tubes. At one time radiators belonging to the first class were very extensively used, but of late years radiators of the second class have displaced them to a large extent.

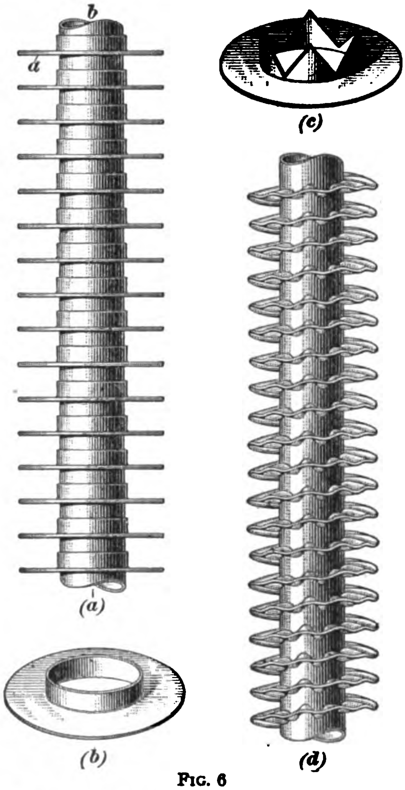

FIG. 6

12. Tubular-Radiator Construction.—Radiator tubes with individual fins are made in two ways, as is clearly illustrated in Fig. 6. In view (*a*) is presented a plain radiator tube, in which the fins *a* are circular, being punched from sheet metal. These fins are strung over a circular tube *b*, after which the tube and fins are dipped into molten solder in order to solder them together. The disks, or fins, are made in various ways.

Sometimes they are simply plain, like washers, in which case their attachment to the tube is rather flimsy; sometimes a collar is formed on the disks, as shown at (*b*); and some makers punch the center of the disk in such a way that triangular lugs are formed, as shown at (*c*). Either of the methods shown in views (*b*) and (*c*) permits the fins to be attached to the tube in a substantial manner.

In view (*d*) a part of a ***Long spirally wound radiator tube*** is shown. In this radiator tube, the fin is continuous, being formed from a flat strip of copper that is crimped in such a manner that it can be wound spirally around the central tube, as shown.

13. Radiators having tubes with individual fins were at one time made up in the form of coils, the tubes running horizontally and being connected by return bends in such a manner as to form a continuous tube, with the cooling water entering at one end and leaving at the other. This method of construction is obsolete, however.

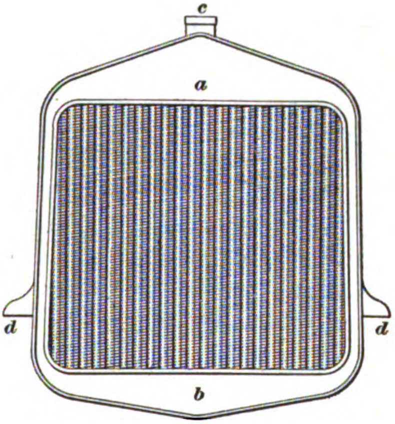

FIG. 7

In modern practice, when tubes with individual fins are employed, the tubes are placed vertically between a top and a bottom water tank and each tube is independent of the other. The appearance of such a radiator is shown in Fig. 7, which presents a front view. In this illustration, *a* is the top water tank, *b* the bottom water tank, *c* the filler opening closed by a removable cap, and *d* are lugs by which the radiator is supported on the side members of the frame of the car. In some cases the lugs are at the rear of the radiator. In no case do the sides form water connections between the top and bottom tanks. The part of the radiator between the two tanks and sides is commonly called the *radiator core*.

14. The general assembly of radiator tubes with fins common to all tubes is shown in Fig. 8, which represents a small section cut from a radiator. The tubes *a* are usually from $\frac{1}{4}$ to $\frac{5}{16}$ inch in outside diameter and are vertical; they are spaced approximately 1 inch from center to center lengthwise of the radiator and $1\frac{1}{4}$ inches from center to center crosswise. The fins *b* are placed horizontal; each fin is made from flat stock with holes punched therein to fit the tubes *a*, and of a length sufficient to reach from the left to the right side of the radiator. Although circular tubes are shown in Fig. 8, some manufacturers use flat tubes, placing the narrow side forwards.

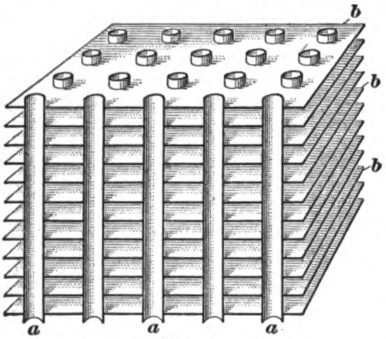

Fig. 8

In order that the fins may assist in cooling, they must be in intimate metallic contact with the tubes; to insure this contact, they are soldered to the tubes.

The general appearance of a radiator built up of vertical tubes with horizontal fins common to all the tubes is shown in Fig. 9, which illustrates the radiator used in the Ford, model T, automobile. In this radiator, a flat plate *a* of steel, perforated to permit the vertical tubes to pass through it, extends clear across the lower part; this plate of steel ties the sides of the radiator together in a rigid manner.

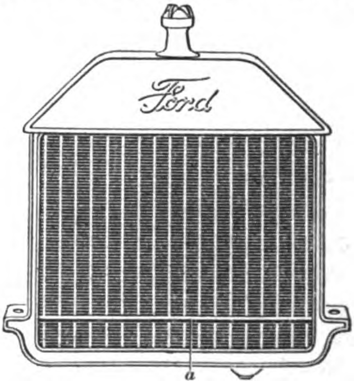

Fig. 9

15. A tubular radiator in which a comparatively small number of flat vertical tubes are used is shown in section in Fig. 10. The tubes *a* are placed with their narrow sides to the front and the rear, and are soldered into the bottom of the top tank *b* and into the top of the bottom tank *c*. The tubes form the water passages in which the water passes downwards, air circulating around them. The two sides of the radiator, as *d*, for instance, do not form water passages. A nozzle *e* is attached to the rear of the top tank and is connected to the pipe leading to the top of the engine-cylinder water-jackets. In some cases the tubes are left plain; in other cases, fins of various kinds are soldered to the tubes in order to increase their radiating surface. One way in which the surface is extended is shown at *f*; a flat strip of sheet metal is punched and corrugated, as shown, and is soldered to one or both sides of the tubes. The corrugated strips then extend the whole length of the tubes. Sometimes a false front, made as indicated at *g*, is fitted into the front end of the radiator in order to convey the impression that the radiator belongs to the cellular type, which is a far more expensive form.

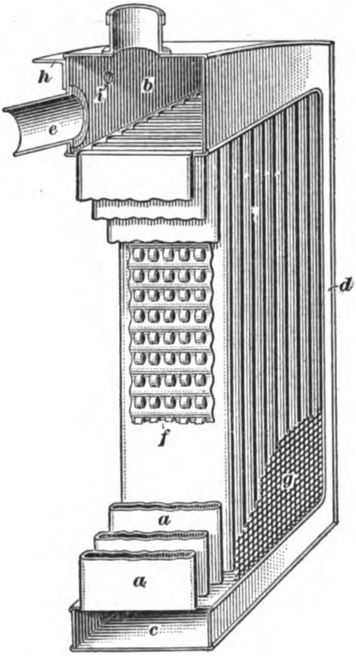

FIG. 10

An angle *h* made of sheet metal is usually attached to the rear of the top tank and to the rear of the two sides, forming a ledge for the hood over the engine; this angle is known as a *hood ledge*. To prevent rattling of the hood on the hood ledge, this ledge is usually perforated and a strip of rawhide belt lacing or some similar material is fastened to its outside. An overflow pipe, whose opening is at *i*, is usually attached to the upper tank and led along the back of the radiator to a point below the upper end of the lower tank; its lower end is open. This overflow pipe prevents filling the radiator too full, and also provides for free expansion of the cooling water on becoming heated.

16. Cellular-Radiator Construction.—The group of cells around which the water circulates in radiators of the cellular type is formed in various ways. In one construction in wide use, the cells are formed of individual tubes of square or hexagonal cross-section that are laid side by side in such a manner that there is a water space around them. In another widely used construction, sheets of metal are bent to form cells that have water spaces around them when suitably assembled It is urged in favor of the individual-tube construction that,

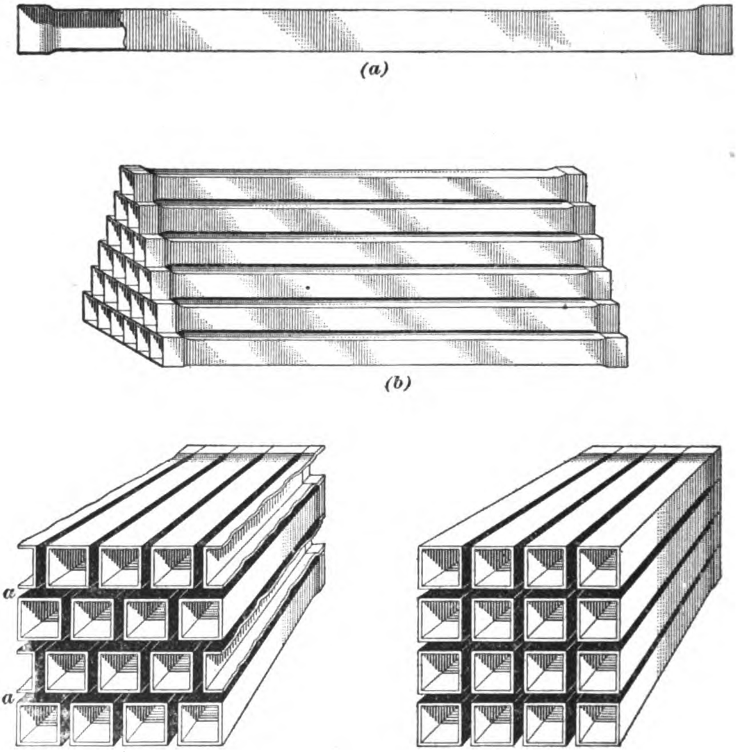

(a)

(b)

(c)

(d)

FIG. 11

in case of leakage, repairs can be executed with great facility by any one expert in the use of a soldering iron, as a tinsmith, for instance.

FIG. 12

17. In the *Fedders cellular radiator*, individual copper tubes, either $\frac{5}{16}$ or $\frac{3}{8}$ inch square, are employed. These, as shown in Fig. 11 (*a*), are enlarged at both ends and are assembled either staggered, as shown in (*b*), or in straight lines, the ends being soldered together. A cross-section through a few tubes of a staggered assembly is presented in (*c*); this view clearly shows the tortuous water passages formed by staggering the tubes. When a staggered-tube assembly is used, it is generally placed so that the straight water passages *a* are horizontal, thus forcing the water to follow a zigzag path in passing downwards through the radiator.

A cross-section through a tube assembly in which the tubes are set in straight lines is shown in (*d*). Here, the water passages are in line both vertically and horizontally, and hence the water passes downwards through the radiator in straight lines. This arrangement of the tubes permits a freer water circulation, but is not so efficient, as far as cooling the water is concerned, as the staggered-tube assembly.

The water spaces are about $\frac{3}{64}$ inch in width and about $3\frac{1}{2}$ inches deep, the individual tubes being about 4 inches long.

In Fig. 12 is shown the appearance of a complete Fedders radiator using the straight-line tube arrangement, the particular radiator illustrated being used in the Winton car. The radiator is supported on the side members of the frame by the two lugs *a*.

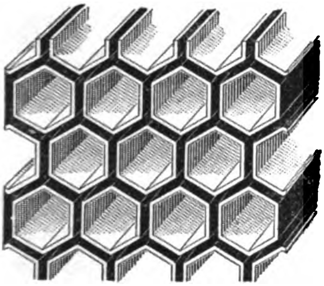

FIG. 13

18. When hexagonal tubes are used in the construction of cellular radiators of the individual-tube type, these tubes are enlarged at the ends in the same manner as square tubes; the individual tubes are then nested, as is shown in Fig. 13, so that the tubes lie in horizontal rows. When thus nested, the water spaces, shown black in the illustration, between adjacent tubes in the horizontal rows are vertical, and a better water circulation is insured than is possible if the tubes are nested so they are staggered. As an inspection of Fig. 13 shows, a cross-section of the tubes greatly resembles a honeycomb; this resemblance has led to calling this type *honeycomb radiators*. Strictly, the term honeycomb radiator should be applied only to those constructed with hexagonal individual tubes nested as shown; it is common practice, however, to apply the term to all cellular radiators.

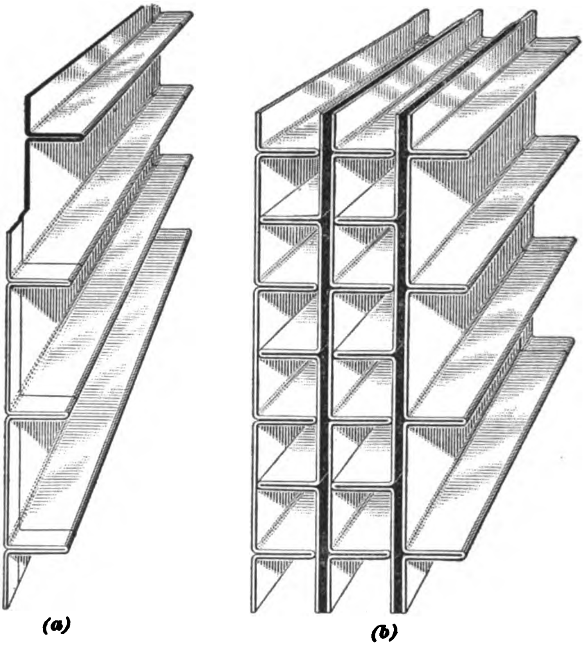

FIG. 1

19. Cellular radiators in which the cells are formed by bending long strips of sheet metal, usually sheet copper or sheet brass, frequently have their cores made from strips bent as shown in Fig. 14 (*a*). These strips have a width equal to the desired depth of the radiator core, and are assembled as shown in (*b*), thus forming vertical water spaces ranging from $\frac{3}{64}$ to $\frac{1}{16}$ inch in width and having a depth about $\frac{1}{4}$ inch less than the depth of the core. The ends of the water spaces are closed by soldering. The construction shown is employed in the *Mayo* radiators.

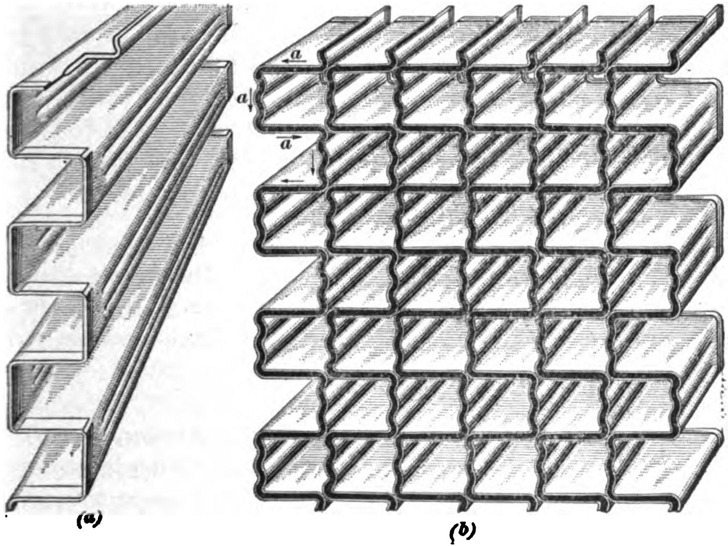

FIG. 15

Radiators constructed as shown in Fig. 14 naturally do not have so much cooling surface per unit of area as cellular radiators with individual tubes, since there are no horizontal or inclined water spaces joining the vertical water spaces.

20. The radiator core used in the *Livingston radiator* is bent up from strips of sheet metal in such a manner, and is so assembled that it overcomes the objection mentioned in Art. **19**; in this radiator core, the water spaces surround the four sides of each cell, which is square in cross-section.

The construction of the Livingston radiator core is illustrated in Fig. 15. In view (*a*) is shown one of the strips from which the core is made; this is bent up from sheet copper having a width of 4 inches, the vertical part of each bend being corrugated to stiffen it, as shown. All horizontal bends are left plain. The bends are alternately wide and narrow, so that when two strips are assembled as shown in the cross-sectional view (*b*) there is formed between them a water space through which the water passes in the direction of the arrows *a*. The pairs of strips are assembled side by side, as shown in (*b*), which view clearly indicates that the four sides of each cell are surrounded by water. The ends of the water spaces are closed by soldering, and the whole assembly is held together by solder.

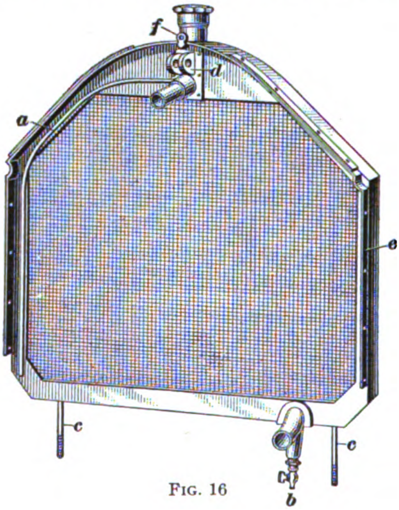

FIG. 16

21. Radiator Overflow, Drain, Connections, and Supports. Practically all modern radiators are fitted with an overflow pipe that carries off surplus water, due either to filling the cooling system too full or to expansion of the water, and also any steam formed while the engine is in operation. The overflow-pipe location was explained in connection with Fig. 10, but is shown better at *a*, Fig. 16, which is a rear view of the Mayo radiator used in some Cole cars.

22. Provision for draining the radiator of all the contained water is usually made by fitting a drain cock *b*, Fig. 16, to the bottom of the bottom tank, although in some cases, where part of the cooling system is located at a lower level than the bottom of the lower tank, the drain cock is applied to the lowest point of this part. Generally, the drain cock is located where it will surely drain the entire cooling system.

23. The top and bottom connections of the radiator to the metallic pipes connected to the top and the bottom of the cylinder water-jacket or water-jackets are always made by means of rubber-lined and rubber-covered hose that is fastened on by hose clips of the same form as those used with ordinary garden hose. The hose makes a flexible connection that prevents the transmitting of engine vibration to the radiator; likewise, the hose, being flexible, prevents undue stresses, such as those due to any swaying of the radiator or engine on account of distortion of the chassis frame in running the car over rough roads, from coming on the radiator.

24. Some radiators are supported by lugs incorporated in their construction. These lugs usually rest on the side members of the frame, to which they are bolted. A fairly thick leather pad or a soft-rubber pad is usually inserted between the lugs and the frame to prevent vibrations from being transmitted to the radiator, which action would tend to destroy the soldered joints and thus cause the radiator to leak. Some manufacturers do not bolt the lugs tightly to the frame, but hold them by the pressure of springs placed between the heads or nuts of the holding-down bolts and the lugs or frame, thus forming a connection that can yield slightly if the frame is distorted. This is done in the model T Ford car, for instance. In many cases the radiator is set on top of a front cross-member of the frame and is bolted thereto by bolts *c*, Fig. 16, with a leather or rubber strip placed between the cross-member and the radiator.

In most cars, the top of the radiator is prevented from swaying lengthwise of the car by running a brace rod from the rear of the top tank to the front of the dash. In Fig. 16, a bracket *d* is shown attached to the rear of the top radiator tank. This bracket forms part of the same casting containing the top radiator inlet pipe, and is used for attaching a brace rod running to the dash. At *e* is shown the hood ledge, and at *f* a socket receiving the center hinge pin of the hood, which is usually made with three longitudinal hinges, one being in the center of the top and one at each upper corner of the radiator.

25. Circulating Pumps.—All pumps used on automobiles for circulating the cooling water are probably of the rotary type, as distinguished from the reciprocating, or plunger, type. There are two general classes of rotary pumps; namely, the *centrifugal* and the *positive*, or *fixed-volume-per-revolution, class.* Positive circulating pumps are either of the *gear* or the *sliding-vane type.*

26. In Fig. 17 are shown two views of the **centrifugal circulating pump** used in the Studebaker "20" car. View (*a*) is taken from the front of the car, the front cover of the casing being taken off in order to show the inside of the pump; view (*b*) is a side view, the pump casing being shown in section. The pump has a rotor *a* that is rigidly fastened to the driving shaft *b*, which in this case is driven through a universal coupling (not shown) from the cam-shaft of the engine. The rotor consists of two disks *a′* and *a″*, between which are six curved vanes a_1. These vanes are clearly shown in view (*a*), in which view the disk *a′* is removed in order to show the vanes. The

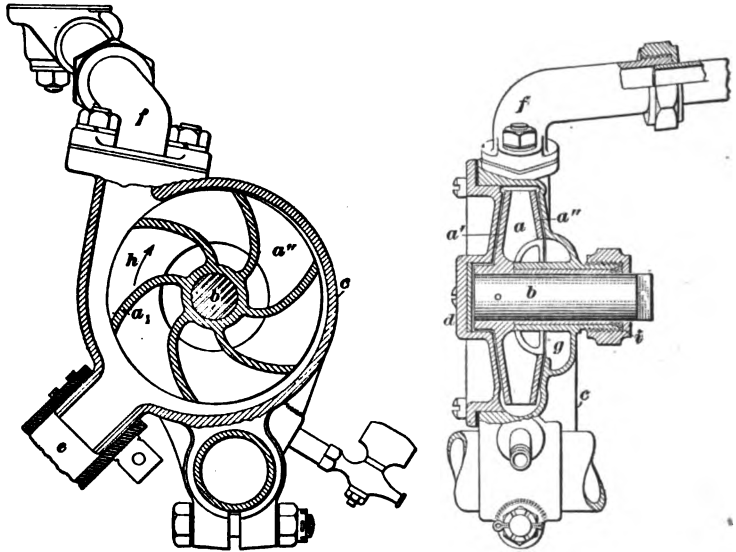

(*a*) (*b*)

FIG. 17

two disks and the vanes of the rotor are cast in one piece. The rotor is enclosed in a housing *c* fitted with a removable cover *d*. The housing has a water inlet *e* connected to the bottom of the radiator, and a water outlet *f* leading to the bottom of the cylinder water-jacket. The disk *a''* of the rotor is cut away at the center to admit to the inside of the rotor water that comes through the passage *g* connected to the inlet *e*. As the driving shaft *b* is turned in the direction of the arrow *h*, the rotor carries the water around and discharges it from the outlet *f*, provided the passage outside the pump is open. The discharge of water is due to both the centrifugal action and the peripheral velocity of the water in the pump. To prevent leakage, the bearing through which the driving shaft *b* enters the pump casing *c* has a stuffingbox *i* that is packed with fibrous packing, usually a prepared hemp packing.

27. A centrifugal pump is not positive in its action; that is, it does not deliver a definite volume of water per revolution under all conditions. Thus, if by any mishap the water outlet is closed, the water in the pump will only be whirled around with the rotor. The pressure will not be much greater under this condition than when the pump is discharging at a moderate rate; it never becomes high enough to injure any properly constructed part. This fact has led to the almost universal adoption of the centrifugal pump for circulating the cooling water.

The quantity of water that the pump will discharge per minute is in a measure proportional to the size, or resistance, of the external passage for a given speed. The quantity increases as the speed increases.

A centrifugal pump will continue to give fair service even after the parts are considerably worn. A loose fit between the edges of the vanes and the casing will allow some of the water to flow back toward the center of the pump, however, and the eddy currents thus set up will cause a loss of efficiency. By placing a disk on each side, or edge, of the vanes, so that the vanes are between the disks and connected to them, as in Fig. 17, the wearing surfaces are made quite durable. In cheap centrifugal pumps, the vanes project from the hub without a disk on either side of them. This form of centrifugal pump is the least durable and efficient.

28. The **gear-pump,** shown in diagrammatic form in Fig. 18, is used to a slight extent for circulating the cooling water. It consists of a pair of ordinary spur gears *a* enclosed in a case having intake and outlet openings *b* and *c* opposite each other. One gear is driven by a shaft and transmits motion to its mate by means of the intermeshing teeth. The directions of rotation of the gears and the divided path of the liquid are indicated by arrows. The teeth of the gears fit closely together so as to prevent any flow of liquid between them, and the ends of the gears fit snugly against the casing.

A pump of this type delivers the same amount of liquid per revolution, whether the speed and pressure are high or low. If a stoppage occurs in the pipes of a pump that is closely fitted, the pressure between the discharge side of the pump and the obstruction will increase until either the pump ceases to operate or something breaks. A gear-pump operates equally well in both directions.

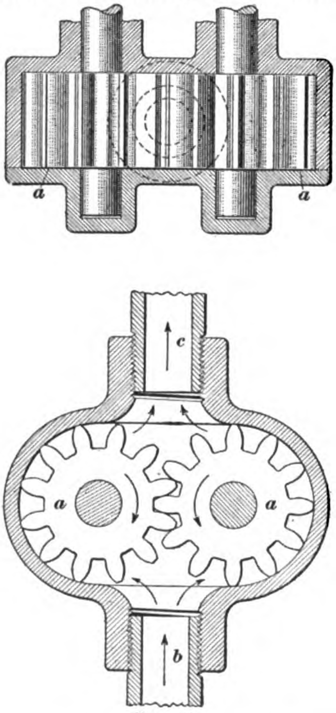

FIG. 18

29. For circulating the water in the Peerless car use is made of a gear-pump having gears of the herring-bone type, which are shown in Fig. 19 removed from the pump casing. The operation of the pump is the same as that of the gear-pump described in Art. 28; it is much more quiet in its action, however, as the helical gear-teeth slide into engagement with

each other instead of rolling into engagement. To prevent breakage of any important part of the power plant that may be caused by a stoppage on the discharge side of the pump, the manufacturers of the Peerless car provide a safety coupling on the driving shaft of the pump, making this coupling so weak that it will break and thereby stop the pump before any more serious damage is done. Obviously, the car should not be operated when this safety coupling is broken.

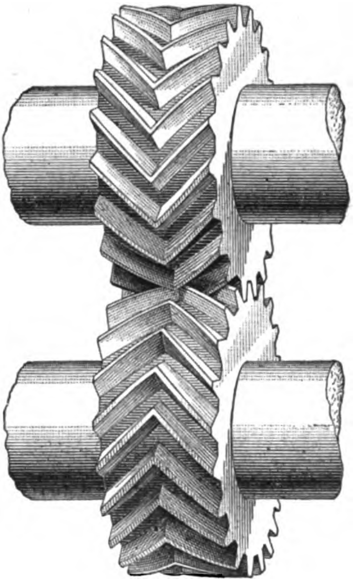

FIG. 19

30. On a number of cars, among which may be mentioned the Haynes and the Apperson automobiles, a so-called **sliding-vane pump** is employed for circulating the cooling water. A pump of this kind is shown in Fig. 20 (*a*). It is composed of a casing *a*, a piston *b*, and two vanes, or wings, *c* and *c'* with springs *d* between them. The piston *b* is rotated by a shaft *e*, shown dotted, which is usually driven from either the engine cam-shaft or the magneto shaft; the piston *b* is concentric with the shaft *e*. The piston and the shaft are mounted eccentrically in a circular machined chamber of the pump casing, as shown. The water coming from the radiator flows to the pump through a pipe connected at *f* and leaves through a pipe connected at *g*, which pipe, in turn, communicates with the bottom of the cylinder water-jacket or water-jackets. An inlet port *h* and an outlet port *i* are cut through the wall of the circular chamber of the casing. The two vanes *c* and *c'* are flat and free to slide in a slot machined directly across the piston; they are shown in perspective at (*e*). The one wing has driven in it two pins that enter corresponding holes in the second wing; when the two wings are assembled in the piston, each pin is surrounded by a spring, shown at *d*, view (*a*). A perspective view of the piston is shown at (*d*), in which view the slot previously mentioned can be clearly seen. A perspective view of the casing is shown at (*b*), and of the cover that closes the casing at (*c*). The lowest part of the casing is fitted with a drain cock.

The action of the pump depends on the motion of the vanes or wings, in the circular chamber of the casing. Suppose that the piston *b* is in the position shown in view (*a*) and that it starts to rotate in the direction of the arrow *j*. As soon as the vane *c* has covered the lower edge of the intake port *h*, it drives the water in the crescent-shaped space between the piston *b* and casing *a* before it and out through the outlet port *i*. In the meantime, as soon as the vane *c* has covered the lower edge of the inlet port *h*, water is drawn through the port into the space behind the vane *c* until it has nearly reached the position of the vane *c'*. As soon as the vane *c'* passes the lower edge of the port *h*, it drives water before it and draws in water behind it; the two blades thus alternate in driving the water before them, thereby producing an almost continuous flow of water.

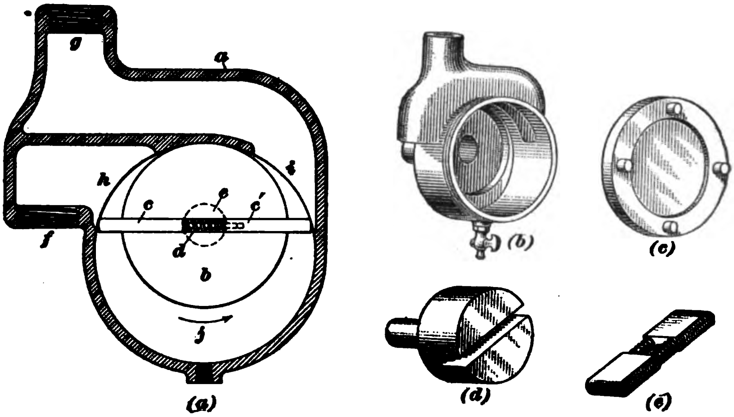

FIG. 20

31. Antifreezing Mixtures for Cooling System.—If a car is to be used in very cold weather, it is advisable to fill the cooling system with some liquid that will not readily freeze.

In weather not colder than 10° F. above zero, especially if a wind is blowing. it requires only a short time for water to freeze in the radiator if the engine is stopped out of doors. The freezing may be prevented for a considerable time, however, by covering the radiator with a blanket or a robe.

Various substances may be mixed with water in order to lower its freezing point; those most commonly used are wood alcohol, denatured alcohol, calcium chloride, and glycerine. Grain alcohol that is not denatured may also be used, the only objection to it being its very high price. In emergencies, when none of the substances just named are obtainable, whisky, brandy, rum, gin, or any other equivalent liquid very rich in alcohol may be added to the cooling water.

TABLE I

FREEZING POINT OF MIXTURES OF WOOD ALCOHOL AND WATER

Percentage of Alcohol	Percentage of Water	Freezing Point of Mixture Degrees F.
10	90	18 above zero
20	80	5 above zero
25	75	2 below zero
30	70	9 below zero
35	65	15 below zero
50	50	35 below zero

32. Table I gives the approximate freezing temperatures for various proportions of alcohol and water. Alcohol vaporizes and passes out of the cooling system more rapidly than does water. It is therefore necessary in order to maintain the proper proportions to add more alcohol than fresh water. The vapor of the alcohol is inflammable. Care should therefore be taken not to bring a naked light near the filler opening of the radiator when the filler cap has been removed. None of the alcohol solutions will injure rubber or attack the different metals in the cooling system.

33. Calcium chloride (*not* chloride of lime) dissolved in water forms a solution that will not freeze so rapidly as water alone. Only chemically pure calcium chloride should be used, however. The impurities in ordinary commercial calcium chloride are apt to attack some of the metals or alloys of the cooling system, especially zinc and solder. Table II gives the approximate freezing points of various proportions of calcium chloride and water.

Before using a calcium-chloride solution it is advisable to make a test for acidity. This may be done by placing a strip of blue litmus paper, which can be bought at any drug store, into a sample of the solution. If this litmus paper turns red, the solution is acid and must not be used without first neutralizing it. Neutralizing is done by adding slaked lime, a little at a time, until a strip of blue litmus paper remains blue. Calcium-chloride solutions are used very little at present.

TABLE II

FREEZING POINT OF MIXTURES OF CALCIUM CHLORIDE AND WATER

Calcium Chloride per Gallon, of 231 Cubic Inches, of Water Pounds	Freezing Point Degrees F.
1.0	27.0 above zero
2.0	18.0 above zero
3.0	1.5 above zero
3.5	8.0 below zero
4.0	17.0 below zero
5.0	30.0 below zero

34. Glycerine and water also form a mixture that stays liquid at a lower temperature than water alone. The glycerine, however, attacks and destroys the rubber in hose connections, etc. Instead of using a mixture of just these two liquids, alcohol is often added. The glycerine is liable to deposit on the walls of the cooling system if the cooling mixture becomes very hot. Table III gives the approximate freezing points of various mixtures of this kind.

35. Draining the Cooling System.—If water alone is used for cooling during cold weather, it should be drained off completely when the car is left standing in a cold place overnight. No water should be allowed to remain in any pocket from which the water cannot drain as the radiator empties. Although nearly all modern cooling systems will drain perfectly by gravity upon opening a drain cock located at the lowest point of the system, many of the older cooling systems will not. Some of these systems cannot be emptied perfectly except by applying air pressure to the highest point. If available, compressed air from a storage tank should be used for this purpose; otherwise, blowing into the system with the mouth or using a tire air pump will do.

TABLE III

FREEZING POINT OF MIXTURES OF GLYCERINE, WOOD ALCOHOL, AND WATER

Percentage of Glycerine	Percentage of Wood Alcohol	Percentage of Water	Freezing Point Degrees F.
5.0	5.0	90	25 above zero
10.0	10.0	80	15 above zero
12.5	12.5	75	8 above zero
15.0	15.0	70	5 below zero
12.0	25.0	63	10 below zero
20.0	20.0	60	23 below zero

AIR COOLING

36. In order that a cylinder may be cooled sufficiently with air to keep the temperature down to a working limit, it is necessary to provide a greater radiating surface with which the air can come into contact than is presented to the atmosphere by a cylinder having a smooth exterior. The increased radiating surface is secured by placing projections on the parts of the cylinder that need the most cooling. These projections are usually in the form of fins, and may be either thin, flat rings at right angles to the cylinder, or thin, flat strips placed radially and running lengthwise of the cylinder. In either case, the inner edge of the fins forms an integral or a substantially integral part of the cylinder casting. Other methods of forming an increased radiating surface, such as using radial pins either cast integral with the cylinder or substantially attached thereto, were formerly employed, but they have become obsolete so far as pleasure automobiles are concerned.

Under normal conditions of operation, the air-cooled engine runs much hotter than one cooled by water or some other liquid. It is not unusual for an air-cooled engine to become hot enough at the cylinder head and exhaust port to glow in the dark. Engines of this class have operated successfully for long periods at this high temperature. However, unless the fuel supply can be completely cut off, difficulty is sometimes met in stopping engines when they are so hot.

37. There are three methods of bringing air into contact with the radiating surfaces of the cylinders. In the first method, the passage of the car through the air is relied on; in the second method, air is blown against the radiating surfaces by a rotating fan; and in the third method, the parts with which the air is to be brought into contact are enclosed in a casing and a current of air is either forced through or drawn through the casing by means of a fan. A greater amount of air can be brought into contact with the radiating surfaces in this manner than when they are not enclosed by a casing.

The air-cooling method first mentioned is used in the Duryea car. The second method has been used in the Cameron car, in some models of the Franklin cars, and in a number of other now obsolete pleasure cars. The method in which air is forced by a fan or a blower through a casing surrounding the cylinders has been used on the Frayer-Miller cars.

38. In the Franklin air-cooled automobiles, there is employed the variation of the third method mentioned in Art. **37** in which air is drawn through a casing surrounding the cylinders. This system, as carried out in the Franklin six-cylinder cars, is illustrated in Fig. 21, where some of the parts of the car are cut away in order to show the cooling system more clearly. Each cylinder of the engine has vertical thin metal fins, or flanges, that are cast in the cylinder walls; also, each engine cylinder is surrounded by a short cylindrical sheet-metal air jacket *a* that is open at the top and the bottom. These air jackets are set through a horizontal metal deck *b* that touches the front of the dashboard *c* and is touched by a ledge on the sides of the hood *d*. A vertical sheet-metal shield *e* reaches from the front of the horizontal deck *b* downwards to the front cover of the engine boot, or sod pan, *f*, which is open at the rear. The space under the hood is thus divided into two compartments by the horizontal deck *b* and the vertical shield *e*; the upper compartment is in communication with the outer air through a large grilled opening *d′* in the front of the hood, the grille-work being formed from flat strips of metal. The flywheel *g* of the engine is a suction fan. It draws air through the opening in the front of the hood into the upper air compartment and thence down through the air jackets

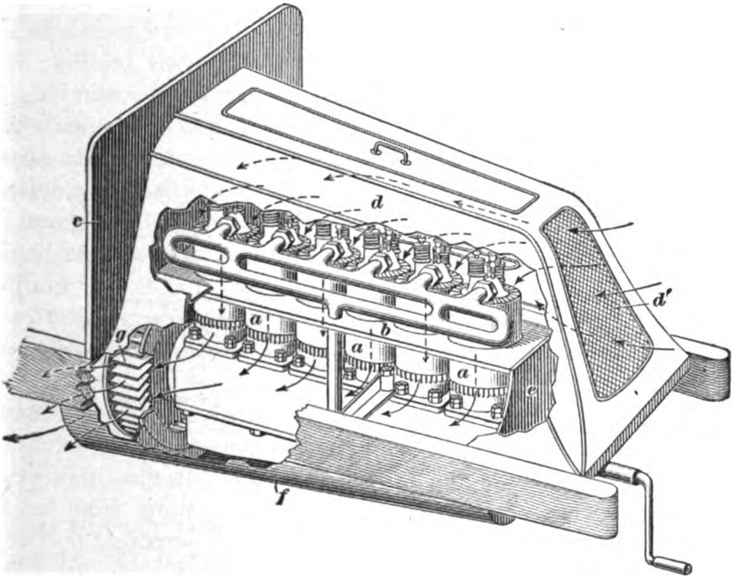

FIG. 21

of the cylinders into the lower compartment, discharging the air through the rear end of the sod pan *f*. The air in passing over the cooling flanges of the cylinder walls cools these walls by absorbing heat and carrying it away, the course of the air being clearly shown by the arrows in the illustration.

EXHAUST MUFFLERS

PURPOSE OF MUFFLING

39. Gases exhausting unrestricted from the cylinder of an internal-combustion engine pass into the atmosphere at a high velocity, so high, especially at high engine speeds, that the result is a continuous noise that can be likened to a series of sharp detonations. This noisy exhausting of the gases is decidedly objectionable, and for this reason many efforts have been made by inventors to produce a device that will muffle the detonations to a degree that will render them unobjectionable. The device used for this purpose is called an **exhaust muffler.**

Generally, the exhaust may be muffled by leading the exhaust gases into a chamber, or chambers, where they can expand to a low pressure and cool at the same time. In most mufflers, the single large stream of exhaust gases coming from each cylinder is broken up into numerous small streams, or thin sheets, to insure rapid cooling and reduction in velocity. In some mufflers, the cooled exhaust gases are discharged into the atmosphere in a series of fine streams, and in others, especially the most modern mufflers, the discharge is in a single stream. It is common practice either to place a valve of some suitable form between the muffler and the engine, or to incorporate a valve directly with the muffler, the valve being operated by a conveniently located foot-pedal. This valve, known as the **muffler cut-out,** opens directly to the atmosphere, and when open, it allows the engine to exhaust directly into the air, either for testing the regularity of the explosions or to gain a slight increase of power by eliminating the back pressure created by the muffler.

A good muffler, in effectively muffling the sound of the escaping exhaust gases, will not create an excessive back pressure on the engine.

CONSTRUCTION OF MUFFLERS

40. Fig. 22 illustrates in section a typical modern exhaust muffler of the type that breaks up the exhaust gases into numerous fine streams. It has two cast-iron heads *a* and *b*, and four concentric cylindrical shells *c*, *d*, *e*, and *f* that are held in position by grooves in the two heads. The assembly is held together by long bolts that pass through both heads. The exhaust pipe *g* is attached to the head *a* and discharges into the inside of the shell *c*. The gases pass through small perforations at the left end of the shell *c* into the larger shell *d*, expanding in doing so, because the volume of the shell *d* is much larger than that of the shell *c*. The gases in the shell *d* pass through perforations at the right end of this shell and expand into the shell *e*. Then they pass through holes in the left end of the shell *e* into the outer shell *f*, expanding therein and, finally, they escape into the atmosphere through the nozzle *h*. This type of muffler has a cut-out valve *i* fitted into the head *b*. This valve is opened by pulling on a cable attached to the cut-out lever *j*, when the exhaust gases can pass from the exhaust pipe *g* through the inside shell *c* and the openings in the valve seat of *i* into the atmosphere.
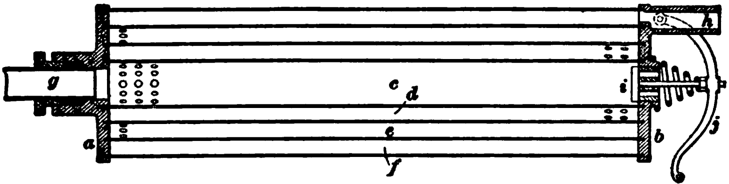
FIG. 22

41. The muffler used in many Stevens-Duryea cars belongs to the type that breaks the solid stream of exhaust gases into thin sheets; it is shown disassembled in Fig. 23. It has an outer shell *a* that is closed, when assembled, by the heads *b* and *c*. The head *b* is fitted with a cut-out valve *d*, and to this head is connected the exhaust pipe. Placed inside of the shell *a* is a series of cones *e* and *f*. The cones *e* are closed at the apex and the cones *f* have the apex open; that is, they are really frustums of cones. These sheet-metal cones are held in place by three supporting shafts *g* and tubular distance pieces *h*. The exhaust gases on entering the muffler strike the first closed cone *e* and pass over its inside surface up to its edge; they then pass over the outside surface into the cone *f*, which delivers the gases into the inside of the second closed cone *e*; and so on. The gases finally escape through a passage in the head *c* into a tube and thence into the atmosphere.

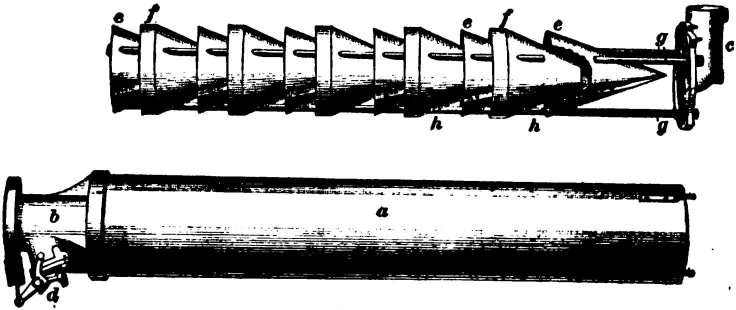

FIG. 23

42. Fig. 24 illustrates, in longitudinal and in cross-section, a muffler of the type that breaks the exhaust gases into numerous small streams. In this form of muffler there are six cylindrical steel shells, three of which are placed eccentric to the center of the muffler. The exhaust gases enter the central chamber *a* of the muffler, and pass through perforations at the top to the first expansion chamber formed by the annular

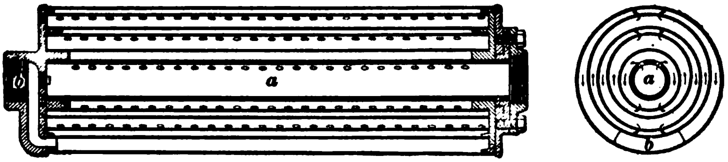

FIG. 24

space between the first and second shells. The gases pass through perforations in the bottom of the second shell into the second expansion chamber, and leave this through perforations in the top of the third shell, entering the third expansion chamber, and so on. The gases finally leave the muffler through the exhaust port *b* and pass into the atmosphere.

43. Mufflers are liable to fill gradually with soot (loose carbon). For this reason, they should be taken apart occasionally and cleaned. When a muffler is apart, the shells or cones, especially those which first receive the exhaust gases, should be examined for corrosion. If a cut-out valve is incorporated in the muffler, it also should be cleaned and examined, and, if necessary, repair should be made.

MUFFLER CUT-OUTS

44. Although many cars are fitted with a muffler cut-out, there are some that are not provided with this device. To meet the demand of owners who desire to place a muffler cut-out on the exhaust pipe, numerous cut-out devices have been placed on the market. Some of them can be applied with very little labor.

45. Fig. 25 illustrates a form of muffler cut-out that will open automatically if an explosion occurs in the muffler, thus acting as a safety valve. It consists of a T-shaped body *a* that is threaded internally at *b* and *c* to fit threads cut on the exhaust pipe. At *d* is formed a valve seat that is normally closed by the valve *e*, which is held to its seat by a spring *f*. A light wire

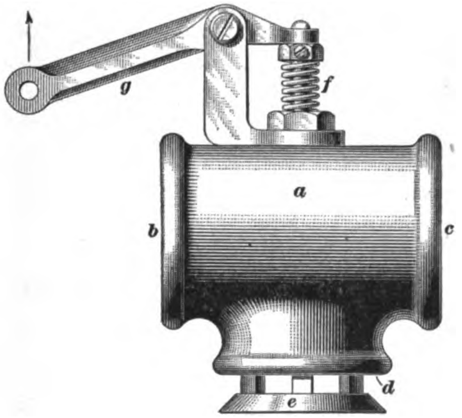

FIG. 25

cable is attached to the lever *g*. When this cable is pulled in the direction shown by the arrow, the valve *e* is pushed away from its seat *d* and a direct passage to the atmosphere is provided for the exhaust gases. If at any time the pressure in the exhaust pipe is great enough to overcome the tension of the spring *f*, the valve *e* will automatically open outwards.

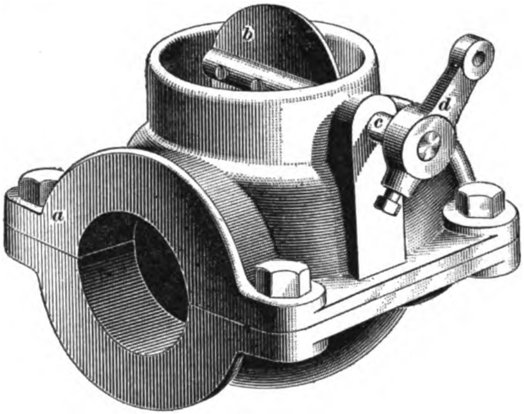

FIG. 26

46. The form of muffler cut-out illustrated in Fig. 26 is intended to be clamped to the exhaust pipe after cutting a **V**-shaped notch into this pipe. For this purpose the body *a* is made in halves. The cut-out valve *b*, which is a butterfly valve, is fastened to a shaft *c*. This shaft also carries a crank *d* that serves to turn the valve *b*, which is shown in its open position.

GOVERNING DEVICES

GOVERNING BY HAND OR FOOT

47. Most automobile engines are controlled by manipulation of the throttle valve and the position of the spark. More accurately, the control proper is accomplished by regulation of the throttle, and the spark advance is regulated to keep the ignition at its most advantageous point for developing the maximum power of the charges received.

The manipulation of the spark alone is sometimes, but wrongfully, employed to modify the speed of the engine, because, with the spark retarded to cause ignition to occur later than it should, the power of the engine is very materially reduced. This, is a most objectionable practice for several reasons: In the first place, it evidently wastes gasoline, because the same result as regards power may be obtained with smaller charges and an earlier spark. Second, the inflammation is so prolonged that it probably is not completed at the time the exhaust valves open, so that the valve seats are exposed to streams of gas still burning. This not only overheats the valves and is liable to warp them, but it soon burns and cuts their ground faces and their seats. Third, the engine is overheated, and preignition of the incoming charge may result, producing explosions in the carbureter and intake pipe. It is, however, permissible to retard the spark to prevent racing, that is, running too fast, when the throttle is nearly closed and the engine is running light, with the car standing still.

48. Inasmuch as automobile engines are operated under wide variations of speed and load, it follows that for correct action the throttle and the spark cannot always be operated together. For example, a rarefied charge, such as is obtained with the engine running at medium speed, with the throttle nearly closed, will burn in a comparatively slow manner and requires an advanced spark for its prompt combustion. Suppose, now, that the car is running at moderate speed under these conditions, as it may when descending a slight grade, or even on level ground. If a slight up-grade is encountered, the operator will open the throttle to increase the power. Under such conditions the speed of the engine will probably not increase, but it will be found that the spark advance suitable for the previous conditions is too early for the increased charges. This will be indicated by the laboring sound and possible pounding of the engine, either of which sounds may be stopped at once by slightly retarding the spark.

49. The manipulation of the throttle valve is effected either by means of a hand throttle lever carried as a general rule at or near the top of the steering-gear column, or by a foot throttle lever mounted on the foot-board. Where cars are fitted with hand throttle lever and foot throttle lever, they are usually so connected that either can operate upon the throttle valve. The foot throttle lever, which is commonly called the *accelerator*, is connected by a spring in such a manner as to tend always to close the throttle valve when not pressed by the foot. The hand throttle lever will stay in any position in which it may be placed on its quadrant; the accelerator, however, must be held with the foot if it is used in driving the car. In some cars the accelerator, instead of being depressed to open the throttle, is moved sidewise or forward with the foot; in a few cars the hand throttle lever and the accelerator are positively connected, so that both always move together.

50. The principle involved in connecting the hand, and, foot throttle levers so that either can operate the throttle valve

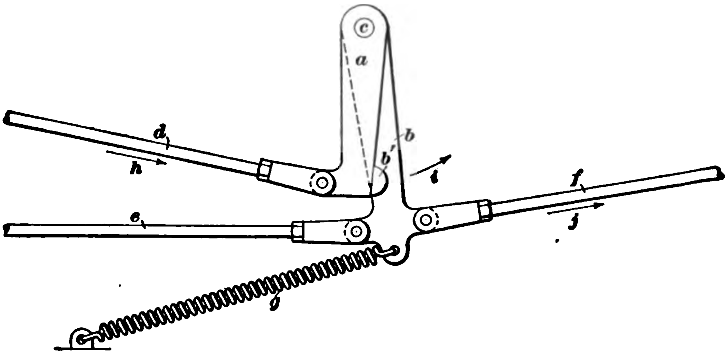

FIG. 27

is illustrated in Fig. 27. There are two crank-arms *a* and *b* that are independent of each other; both are mounted, and free to turn on, the same stud *c*, which is rigidly fixed in position. The lever *b* has a boss *b'* raised so as to form a stop against which the lever *a* may rest. The rod *d* is hinged to the lever *a* and connects with the hand throttle lever; the rod *e* is connected to the accelerator, and the rod *f* to the carbureter throttle valve. The rods *e* and *f* are hinged to the lever *b*. A helical spring *g* is hooked to the lever *b* at one end and to some stationary part of the car at the other end. This spring *g* is always so mounted that it tends to pull the rod *f* in the right direction to close the throttle valve.

Suppose that the hand throttle lever is operated so as to push the rod *d* in the direction of the arrow *h*. This movement causes the lever *a* to swing in the direction of the arrow *i*, carrying the lever *b* with it in the same direction and causing the rod *f* to move in the direction of the arrow *j*, thereby opening the throttle valve. When the hand throttle lever is operated in an opposite direction, the rod *d* and lever *a* are positively pulled back by that lever; the lever *b* and the rod *f* are pulled back by the spring *g*, however, which tends to keep the projection *b′* of the lever *b* in contact with the lever *a*. It is then evident that if the hand throttle lever is moved, the levers *a* and *b* and the rods connected to them move also, and since the rod *e* connects to the accelerator, this moves in unison with the hand throttle lever.

Now assume that the hand throttle lever has been set so as to partly close the throttle valve and that the accelerator is used, moving it so that the rods *e* and *f* are pushed in the direction of the arrow *j*. The rod *d* and the lever *a* remain stationary, but the lever *b* swings away from the lever *a*; the throttle valve is thus opened, the hand throttle lever remaining at rest. When the pressure on the accelerator is relieved, the spring *g* immediately pulls the lever *b* and the rods *e* and *f* back, thereby closing the throttle valve.

The details of the mechanism explained by the aid of Fig. 27 naturally vary somewhat in different cars.

AUTOMATIC GOVERNORS

51. A governing device that automatically controls the speed of an engine, preventing it from racing when the load is suddenly removed, as, for instance, when the clutch is suddenly released without simultaneously closing the throttle valve, is known as an **automatic governor.** Such devices, while at one time in great favor, are at present retained by only a few automobile manufacturers. Automatic governors applied to automobile engines are of two types, namely, *hydraulic governors* and *centrifugal governors*.

In **hydraulic governors**, a closing movement of the throttle valve is brought about by increasing the pressure on a liquid through an increase of the engine speed.

In **centrifugal governors**, centrifugal force acting upon revolving weights changes their position through an increase of the engine speed; this change of position, in turn, induces a closing of the throttle valve, thereby slowing up the engine.

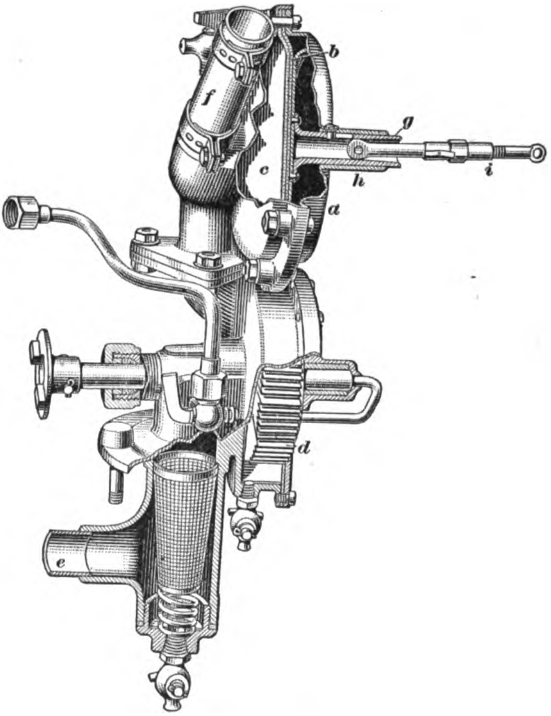

FIG. 28

52. The governor used in the Packard car is of the hydraulic type; it is shown in connection with the circulating pump in Fig. 28, some parts being cut away. The position of the governor in relation to the engine has been previously shown at *i*,

Fig. 2. The governor consists essentially of a circular chamber *a*, Fig. 28, divided by a flexible diaphragm *b* made of leather and rubber. On the one side of the diaphragm is a water space *c* through which passes the cooling water taken by the circulating pump *d* through the connection *e* from the bottom of the radiator and discharged through *f* into the manifold connected to the bottom of the water-jackets. On the other side of the diaphragm there is a plunger *g* having a large head; this plunger is free to slide in the bearing *h* and has hinged to it the rod *i*, which, in turn, is connected to the carbureter throttle valve.

The action of the governor is as follows: if the load on the engine is decreased, as by releasing the clutch, the increase of engine speed at once creates a greater pressure in the water space *c*. In consequence, the diaphragm moves toward the rear of the car, which is to the right in the case of Fig. 28, thereby moving the plunger *g* and rod *i* and thus closing the throttle further. This movement of the diaphragm takes place only in case the hand throttle lever has not been employed in closing the throttle valve a sufficient amount at the instant the load on the engine was decreased. When the engine speed decreases, the pressure in the water space is lessened, and hence the diaphragm tends to move to the left, thereby opening the throttle valve further. In closing the throttle, the movement of the diaphragm compresses a spring surrounding a rod leading from the carbureter to both the hand throttle and the accelerator control mechanism; this same spring assists the diaphragm to move to the left when the engine speed is lessened.

53. The manner in which the hand throttle, the accelerator, and the governor are connected together so that any one of them can act on the carbureter throttle valve is shown in Fig. 29.

The hand throttle lever on top of the steering post, when moved by hand, either pushes up or pulls down the tube *a* inside the steering column *b*. A sliding sleeve *c* surrounds the steering column near its base and is attached to the tube *a* so as to move up or down with it. A bell-crank *d* having a short and a long crank-arm is pivoted at *e* to a bracket forming part of the steering-gear casing; its short arm is attached to a collar carried by the sliding sleeve *c*. The long arm of the bell-crank *d* is forked at the end, the two jaws of the fork fitting loosely into slots cut at opposite sides of a collar *f*, which is loose on the carbureter control rod *g*, but is confined between two compression springs *h* and *i* whose tension can be adjusted by means of the washers, nuts, and locknuts, shown at *j*. The one end of the control rod *g* is hinged to the accelerator pedal *k*, which forms a bell-crank, and is fulcrumed at *l* to a casting that forms a support for the steering column where it passes through the dashboard of the car. The opposite end of the control rod *g* is hinged to the carbureter throttle-valve crank *m*; the rod *n* hinged to the same crank connects to the governor.

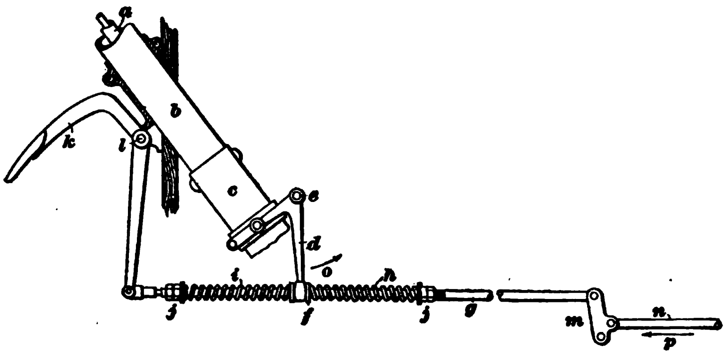

Fig. 29

54. When the hand throttle lever is used to control the engine speed, the operation is as follows: When rotating the hand throttle lever to open the throttle valve, the sleeve *c* slides downwards, thereby rotating the bell-crank *d* in the direction of the arrow *o*. This movement of the bell-crank carries the control rod *g* with it in the same direction and hence rotates the throttle-valve crank *m* so as to open the throttle valve. The governor control rod *n* also moves in the same direction as the rod *g*, pushing the governor diaphragm *b*, Fig. 28, slightly into the water space on one side of it. Since the accelerator pedal is hinged to the control rod *g*, Fig. 29, it moves up or down with any motion of the hand throttle lever, but without in any way controlling the speed of the engine. Now suppose that, with the hand throttle lever set so as to open the throttle valve partly, the load is suddenly taken off the engine. The governor at once acts, pushing the rod *n* in the direction of the arrow *p* and rotating the throttle-valve crank *m* so as to close the throttle. Since the hand throttle lever is stationary, the bell-crank *d* is also stationary; the control rod *g* slides through the collar *f* in the same direction as the rod *n*, compressing the spring *h* in doing so. This movement continues until the force acting on the governor diaphragm equals the tension of the spring *h*. Obviously, the accelerator pedal *k* moves in unison with the control rod *g* whenever the governor acts.

When the accelerator is employed to control the engine speed, the hand throttle lever is usually set for a low engine speed and left there. Consequently, the bell-crank *d* and the collar *f* are now stationary. Depressing the accelerator pedal *k* moves the control rod *g* and the throttle-valve crank *m* so as to open the throttle valve, compressing the spring *i* in doing so; when the accelerator pedal is released, the spring *i* moves the control rod *g* so as to close the throttle. When all pressure is removed from the accelerator pedal, the governor is free to act again; while the accelerator pedal is held in position, the governor does not act.

The action of the Packard control mechanism may be summed up as follows: While the hand throttle lever is moving or stationary, the governor is free to act; the speed at which the governor tends to maintain the engine depends on the position of the hand throttle lever. The accelerator permits a higher engine speed than corresponds to the position of the hand throttle lever, since it prevents the working of the governor while the pedal is held in position.

55. An example of a centrifugal governor is presented in Fig. 30, which shows two views of the governor used on the Peerless automobile. View (*a*) shows the position of the moving parts when the engine is at rest, and view (*b*) their position when the engine is running at high speed. Inside of the aluminum casing *a* are two weights *b* pivoted at *c* to the arms *d*. The arms *d* are pinned to the shaft *e* by means of the pin *f*. Forming part of each weight is an arm *g*, which is

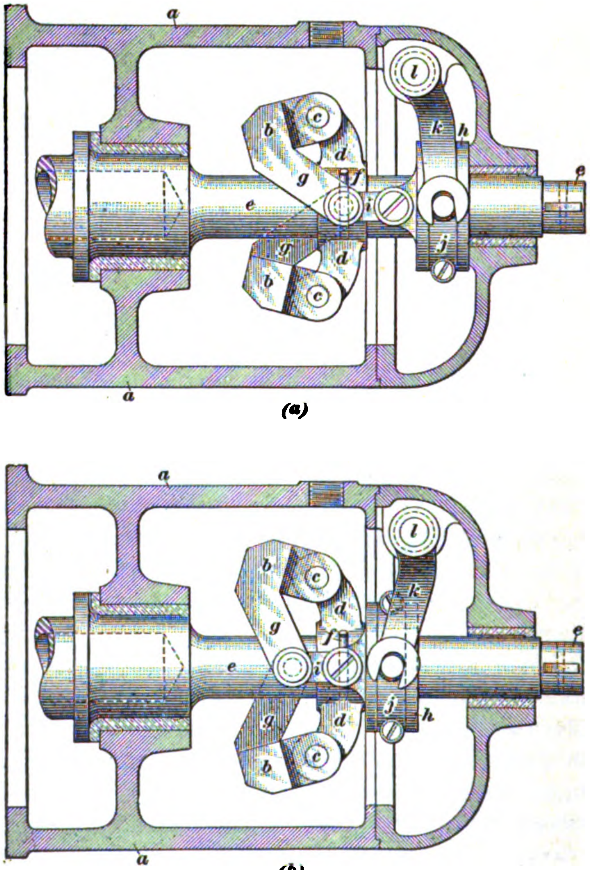

FIG. 30

connected to a sliding collar *h* by means of a link *i*. One of these arms with its connecting link is located on each side of the shaft *e*. The sliding collar is keyed to the shaft in such a way that it turns with the shaft but is free to slide lengthwise on it. Partly surrounding the sliding collar *h* and connected to it by means of a slip ring *j*, is a yoke *k*. This yoke is keyed to a shaft *l*, and at one end of the shaft there is pinned to it a short lever. This lever is connected by means of a rod to the throttle valve in the carbureter. The governor is located at the front end of the engine and is driven from the gear-train that drives the cam-shaft, the magneto shaft, etc.

56. When the engine is not running, the weights *b* and the sliding collar *h* take the positions shown in Fig. 30 (*a*). They are held in this position by the force of a coil spring that is fitted to one of the throttle-connecting rods and must be compressed when the throttle valve is closed by the governor. When the engine is running, centrifugal force tends to throw the weights outwards to the position shown in view (*b*). As the weights fly outwards, the restraining spring is compressed and the sliding collar *h* is pulled along the shaft *e* toward the arms *d* by the links *i*. This movement of the sliding collar turns the shaft *l* by means of the yoke *k*, and, by suitable connections, tends to close the throttle valve. As the speed of the engine is reduced, the weights *b* move inwards toward the shaft *e*, allowing the sliding collar to move back toward the position shown in view (*a*), thus permitting the throttle valve to open.

57. The method of connecting the hand throttle, the accelerator, and the governor on the Peerless car, so that either can operate the carbureter throttle valve, is illustrated in Fig. 31. The steering column *a* carries a sliding sleeve *b* that can be moved up or down by means of the hand throttle lever on the steering post. The tube *c* is free to rotate on a shaft *d* that is carried by the support *e* and the bracket *f*. The support *e* is fixed to a cross-member of the automobile frame and the bracket *f* is bolted to the casing that encloses the lower end of the steering column. The yoke *g* and the arm *h* are both integral with *c*, forming a bell-crank that is rotated when the sleeve *b* is moved up or down on the steering column. The shaft *d* is also free to rotate and has the lever *i* fixed to one end and the arm *j* to the other. The accelerator *k* and the lever *l* are rigidly connected by the short shaft *m*, and thus turn with the shaft *m*, which is surrounded by a stationary bearing not shown, as a pivot when the pedal *k* is depressed. An adjustable

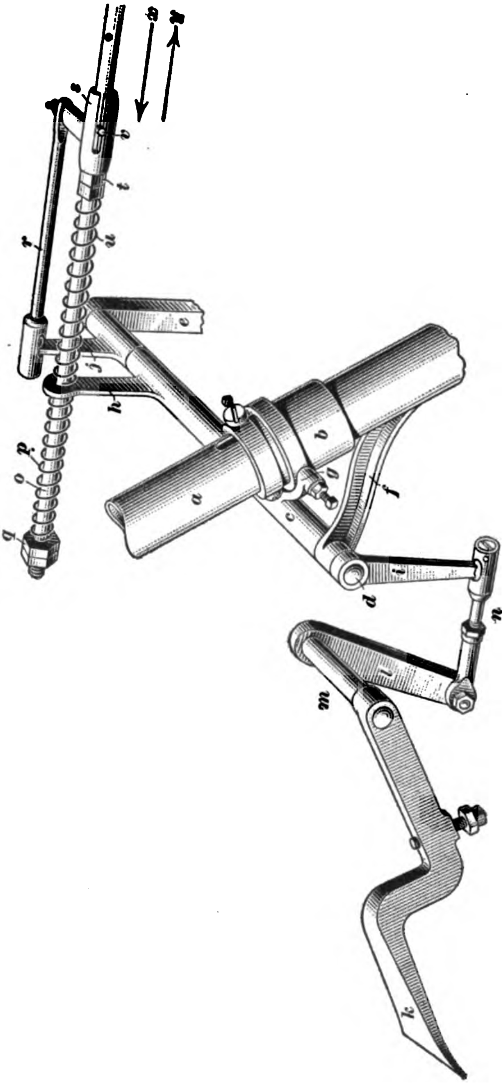

FIG. 31

link *n* connects the levers *i* and *l*. The rod *o* is connected at its forward end, which is to the right in the illustration, to the carbureter throttle-valve lever in such a manner that, when the rod is moved in the direction indicated by the arrow *x*, the throttle is opened, and when it is moved in the direction indicated by the arrow *y*, the throttle is closed.

A movement of the hand lever on the steering column in the proper direction raises the sleeve *b* and this, in turn, rotates the tube *c* through the yoke *g*. The arm *h* is thus rocked in the direction of the arrow *x*. This movement of the arm *h* is transmitted to the rod *o* through the spring *p* and the nuts *q*; hence, the rod is also moved in the direction of the arrow *x* and the throttle is opened. The mechanism by means of which the sleeve *b* is raised or lowered is self-locking; that is, the hand throttle lever will remain in any position in which it is placed until moved by the operator.

With the throttle valve partly opened by means of the hand lever, it may be still further opened by the use of the foot-pedal, or accelerator pedal, *k*. Depressing this pedal swings the lever *l* about the pivot *m* and moves the connection *n* ahead in the direction of the arrow *y*. The shaft *d* is thus turned by means of the lever *i*, and the arm *j* is consequently rocked in the direction of the arrow *x*. This movement of the arm *j* moves the link *r* and the sleeve *s* in the direction of the arrow *x*. Any movement of the sleeve *s* in this direction is transmitted to the rod *o* by the nuts *t*; therefore, the rod *o* is also moved in the direction necessary to open the throttle. However, this movement of the rod compresses the spring *u* and it, therefore, returns the sleeve *s* to its original position when the accelerator *k* is released. By this arrangement, the throttle may be set in any desired position by the hand lever on the steering column, and then if more power is wanted, it may be temporarily opened wider by the foot-pedal, or the throttle may be opened from its closed position by this pedal. Releasing the accelerator returns the throttle to its original opening.

Any movement of the throttle valve by the centrifugal governor also moves the rod *o*. For instance, when the engine speeds up, the automatic action of the governor partly closes the throttle and moves the rod *o* in the direction of the arrow *y*. This movement is restrained by the compression of the spring *p* between the nuts *q* and the arm *h*; hence, the rod is returned to its original position when the engine again slows down. When the centrifugal governor acts to open the throttle partly, the spring *u* is compressed and it is this spring that restrains the action of the governor.

The pin *v* is integral with the rod *o* and serves as a guide for the sleeve *s*, which slides on the rod.

Briefly stated, the governor controls the speed of the engine for any throttle opening fixed by the position of the hand throttle lever. Depressing the accelerator pedal opens the throttle valve and holds it open against the action of the governor; hence, the speed of the engine for any opening of the throttle less than the maximum opening, may be increased by operating this pedal.

ELECTRIC IGNITION

(PART 1)

THEORY AND APPLICATION

ELEMENTARY PRINCIPLES

DEFINITIONS OF ELECTRICAL TERMS

1. **Electricity** is the name given to the cause of all electric phenomena. The exact nature of electricity is not known; but its effects, the laws governing its action, and the methods of controlling and using it are well understood. Electricity is neither a form of matter, as matter is generally understood, nor is it a form of energy, although energy is required to move it, and when in motion it is capable of doing work.

2. Electricity may manifest its presence or movements in various ways. For example, it may cause attractions or repulsions of some kinds of matter; it may decompose into elements some kinds of matter through which it passes, as the decomposition of water into two gases, hydrogen and oxygen; it may cause a magnetic needle to deflect; it may cause physiological effects in or shocks to the nervous systems of all animals; it may heat substances through which it passes; or it may pass through air in the form of an electric spark, or arc.

3. Electricity may appear either to reside on the surface of bodies as a **charge,** or to flow through the substance or on the surface of a body as a **current.** That branch of the science which treats of charges on the surface of bodies is termed *electrostatics*, and the charges are said to be *electrostatic*, or simply *static*, *charges* of electricity. *Electrodynamics* is that branch of science which treats of the action of *electric currents*.

4. **Electrostatics.**—For present purposes, very little need be said about **electrostatics.** The electricity used for igniting the combustible mixture, or charge, in automobile engines is in motion, and hence its discussion falls naturally under electrodynamics.

5. **Conductors and Insulators.** — All bodies conduct electricity to some extent, and there is no known substance that does not offer some resistance to its flow. All bodies have been divided into two classes: **non-conductors, or insulators,** which offer a very high resistance to the passage of electricity; and **conductors,** which offer a comparatively low resistance to the passage of electricity.

All metals and alloys allow electric current to pass through them readily, but some offer much greater resistance to the flow of the current than do others. Some of the non-metallic substances also allow the current to pass quite freely, but offer much greater resistance than do the metals. A substance that allows current to pass freely is called a *good conductor* of electricity and its conductivity is said to be *high*. The classification of substances as conductors depends to some extent on the nature of the service for which they are to be used.

In automobile practice, the following substances are used as conductors: Copper in wires, switches, and parts of apparatus; brass and bronze in parts of apparatus and machinery; iron and steel as parts of the machinery; aluminum alloy in machine parts; tin-foil in connection with induction coils; platinum or an alloy of platinum and iridium (platino-iridium) for the points at which the electric spark occurs in igniters; and the metals, carbon, and alloys, and also solutions, in batteries.

6. Copper is a far better conductor than any other of the substances mentioned. Pure aluminum has about 63 per cent. of the conductivity of copper, but the aluminum alloys used probably seldom have more than one-eighth of the conductivity of copper when dimensions, and not weights, are compared. The softer irons and soft, or mild, steels do not have more than about one-eighth of the conductivity of copper. The hard steels have much less. The brasses and bronzes probably never exceed one-third of the conductivity of copper.

Moist earth is a sufficiently good conductor of electricity to cause trouble when it collects as damp dust around parts between which the current should not pass.

7. An **insulating substance** is one that does not allow any appreciable quantity of electricity to pass through it under the condition in which it is used. The insulating materials commonly used for the electrical parts of an automobile are: India-rubber composition; silk, and cotton on wires, used in apparatus and for connecting them; paraffin in induction coils and to some extent on wires; hard, or vulcanized, rubber in induction coils, magnetos, etc.; wood fiber (vulcanized or compressed into hard sheets, tubes, etc.) in the electric apparatus and around wires; mica, porcelain, and steatite, also called soapstone, in the spark plug; shellac applied as a varnish on wood and in some parts of the apparatus; dry wood, varnished; paper, varnished, in induction coils; pitch in dry batteries, and sometimes on wire.

Enamel, glass, slate, and marble are good insulators, but they are not much used on automobiles. Dry air is an excellent insulator. Oils are also good insulators, but they are not intentionally used as such on automobiles. The timer or commutator, which forms a part of the electrical circuit, is usually filled with grease or oil. Neither grease nor oil could be used for lubricating purposes in such a way if they were good conductors.

8. **Resistance.** — The opposition that a substance offers to the passage of a direct current through it is called its **resistance.** If the sectional area of a piece of a given material is uniform, its resistance is directly proportional to its length. Hence, a piece of copper wire of uniform diameter and 10 feet long has twice the resistance of 5 feet of the same wire; also a piece 15 feet long has three times the resistance of 5 feet of the same wire.

If the lengths of two pieces made of similar material are equal, their resistances are inversely proportional to their sectional areas. The greater the sectional area, the less the resistance. Thus, the resistance of 1,000 feet of No. 13 copper wire, which has a sectional area of .004067 square inch, is 1.999 ohms; whereas, the resistance of 1,000 feet of No. 10 copper wire, which has a sectional area of .008154 square inch, or a trifle over twice the sectional area of the No. 13 wire, is .9972 ohm, or very nearly half that of the No. 13 wire. Annealed, soft-copper wire insulated with cotton, silk, rubber, or composition of some kind, is about the only wire used in the electrical circuits of automobiles.

ELECTRODYNAMICS

9. **Electric Potential.**—The **electric potential** of a body is its electrical condition, and is analogous to *pressure* in gases, *head* in liquids, and *temperature* in heat. If the liquids of each of two connected vessels have the same head, there will be no flow from one to the other; but if the liquid in one of the vessels has a higher head than that in the other, there will be a flow corresponding to the difference of the heads. Similarly, if two connected bodies have the same electrical potential, there will be no flow of electricity from one to the other; but if one has a higher potential than the other —that is, if there is a *difference of electrical potential*—electricity is said to flow *from* the body having the higher potential *to* the body having the lower potential, and the rate of flow is proportional to the difference of potential.

10. The earth may be regarded as a reservoir of electricity of infinite quantity, and its potential, or pressure, may therefore be taken as zero. For. convenience, it has been arbitrarily assumed that the electrical condition called *positive* is at a higher potential, or pressure, than the earth, while that called *negative* is at a lower potential, or pressure, than the earth; and that electricity tends to flow from a positively to a negatively electrified body. Therefore, when a positively electrified body is connected by a conductor to the earth, electricity is said to flow from the body to the earth; and, conversely, when a negatively electrified body is connected to the earth, electricity is said to flow from the earth to the body. Also, when a positively and a negatively electrified body are connected by a conductor, electricity is said to flow from the positively electrified body to the body having the negative charge. While these assumptions may or may not be true, they assist very materially in explaining and understanding the subject of electricity.

11. Electricity is a *condition of matter*, and not matter itself, as it has neither *weight* nor *dimensions*. Consequently, the statement that electricity is *flowing* through a conductor must not be taken too literally; it is only another way of saying that a change, the nature of which is not fully understood, is taking place in the electrical condition of the conductor and that differences of potential are tending to become equalized. It must not, therefore, be supposed that any substance, such as a liquid, is actually passing through the conductor in the same sense that water flows through a pipe.

12. Electromotive Force.—The expression **electromotive force,** usually abbreviated to **E. M. F.,** has practically the same meaning as difference of electric potential, or electric pressure. Electromotive force is the force that moves or tends to move electricity from one place to another. The practical unit of electromotive force is the *volt*. An instrument used to measure electric pressure and indicate its intensity in volts is called a *voltmeter*.

13. An electromotive force may be produced or generated in a number of ways, among which are the following:

1. By friction and electrostatic induction.

2. By dipping the ends of two strips of dissimilar materials into a liquid that has a greater tendency to act chemically on one material than on the other. The electromotive force is due to chemical action or affinity between the strips and the liquid.

3. By magnetic induction. The explanation of this method will be made after the subject of magnetism has been considered.

4. By the contact of two dissimilar materials, as shown in Fig. 1, when the junction *d* is at a different temperature from the two ends *a* and *b*, which are supposed to be at the same temperature. An electromotive force produced in this manner is called a *thermoelectromotive force*.

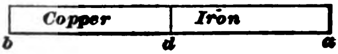

Fig. 1

The production of an electromotive force by friction is made evident by the charges of electricity accumulated on large moving belts. The production of electromotive forces by the first and fourth methods is not of great importance in this discussion, and will not be referred to again.

14. Ampere, Volt, and Ohm.—The chemical action in a galvanic cell produces an electromotive force, and this, in turn, causes a difference of electric pressure, or tension, at the terminals of the cell. This difference of electric pressure, or potential, commonly called *pressure*, causes a current to flow when the external circuit is closed. Both the external circuit and the internal circuit offer resistance to the flow of the current. The forcing of the current through the wire of the external circuit produces heat in the wire. If the terminals of a dry battery are connected by a thin, insulated magnet wire wound in a coil, as by winding the wire on a spool, such as is used for silk thread, the coil will become decidedly warm in a short time. There would be as much heat developed in the wire if it were not coiled, but it would keep cooler on account of being more exposed to the atmosphere.

Electric pressure is measured in **volts**; current in **amperes**; and the electrical resistance in **ohms**. A pressure of 1 volt will send a current of 1 ampere through a resistance of 1 ohm; also 2 volts will send 2 amperes through the same resistance.

An instrument that indicates the number of amperes of current flowing in a circuit in which it is connected is called an *ammeter*. For use in automobile practice, an ammeter and a voltmeter are frequently combined in a single small case that is easy to handle.

15. Ohm's Law.—The relation between the three factors—resistance, electric pressure, and current—is expressed by **Ohm's law**. If the values of any two of these factors are known, that of the third may be calculated by the following rules:

Rule I.—*The strength, in amperes, of a direct current flowing in a closed circuit, when the electromotive force and the total resistance are known, is found by dividing the electromotive force, in volts, by the total resistance, in ohms;* that is,

$$\text{current in amperes} = \frac{\text{electromotive force in volts}}{\text{resistance in ohms}}$$

Rule II.—*The total resistance of a closed circuit, in ohms, when the electromotive force and the direct current are known, is found by dividing the electromotive force, in volts, by the current, in amperes;* that is,

$$\text{resistance in ohms} = \frac{\text{electromotive force in volts}}{\text{current in amperes}}$$

Rule III.—*The total electromotive force, in volts, expended in a closed circuit, when the direct current and the total resistance are known, is found by multiplying the current, in amperes, by the total resistance, in ohms;* that is,

$$\text{electromotive force in volts} = \text{current in amperes} \times \text{resistance in ohms}$$

16. The following examples show the application of Ohm's law.

Rule I determines the strength of current that will flow in a conductor of a given resistance when the pressure, in volts, is known.

EXAMPLE 1.—A circuit has a resistance of 45 ohms and an available pressure of 15 volts; what is the strength of the current in amperes?

SOLUTION.—According to rule I, the current is equal to 15 divided by 45, which is $\frac{1}{3}$ ampere. Ans.

EXAMPLE 2.—What current can be made to flow through a circuit having a resistance of 10 ohms, if an electromotive force of 15 volts is applied?

SOLUTION.—According to rule I, current $= 15 \div 10 = 1\frac{1}{2}$ amperes. Ans.

17. In case the electromotive force, or difference of potential, is known, rule II must be used to calculate the resistance of the circuit that will allow a given current to flow through it.

EXAMPLE 1.—The electromotive force of a circuit is 100 volts; it is desirable to have a current of .5 ampere flowing in the circuit; what should be the resistance?

SOLUTION.—According to rule II, the resistance is equal to 100 divided by .5, which is 200 ohms. Ans.

EXAMPLE 2.—Through what resistance can an electromotive force of 50 volts cause a current of 5 amperes to flow?

SOLUTION.—According to rule II, the resistance $= 50 \div 5 = 10$ ohms. Ans.

18. To find how much pressure it will require to force a given current through a given resistance, it will be necessary to use rule III.

EXAMPLE 1.—How much pressure will it take to force a current of 1.8 amperes through a resistance of 5 ohms?

SOLUTION.—According to rule III, the voltage required is equal to 1.8 multiplied by 5, which is 9 volts. Ans.

EXAMPLE 2.—What voltage is required to send a current of 25 amperes through a resistance of 4 ohms?

SOLUTION.—According to rule III, the difference of potential required $= 25 \times 4 = 100$ volts. Ans.

THE VOLTAIC CELL

19. If two dissimilar materials, as zinc and copper or zinc and carbon, are partly or wholly immersed in water in which some acid has been mixed or a salt has been dissolved, and are connected by a conductor outside the liquid, chemical action will occur between the two materials and the liquid, and an electric current will flow through the liquid and the external circuit. Such a device is known as the **voltaic, or galvanic, cell,** from its discoverers, Volta and Galvani.

20. Fig. 2 shows a glass vessel *A* containing water, in which a salt commercially known as *sal ammoniac* (chemically known as ammonium chloride, or chloride of ammonia) has been dissolved. At *C* is shown a slab of carbon, or coke, compressed to dense form, and at *Z*, a metal plate of zinc. A copper wire is firmly attached to the carbon slab and also to the zinc plate, so as to be in intimate contact with the material. If the free ends of the wires are brought together, and are clean, so as to make good metallic contact, a current of electricity will flow from the carbon plate through the wires to the zinc plate, and from the zinc plate through the liquid to the carbon plate. The arrows show the direction of current flow when the ends of the wires are connected together.

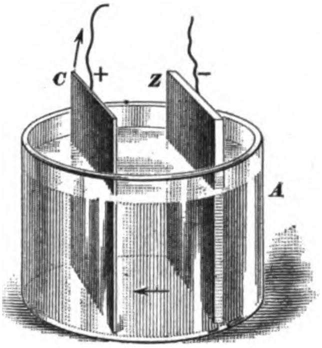

FIG. 2

The liquid, no matter what its composition may be, is called the **electrolyte,** and it must be such that it will act more readily on one plate than on the other, in order to produce a difference of potential, or electromotive force, between them. The resistance of the two plates and the electrolyte is called the **internal resistance** of the cell.

The points where the wires are attached to the plates outside the liquid are the **terminals.** The one at the carbon slab is the **positive terminal,** or **electrode,** and is indicated by the plus sign (+); and the one at the zinc plate is the **negative terminal,** or **electrode,** and is indicated by the minus sign (−).

21. The equalizing flow that is constantly taking place from one plate to the other is known as a **direct current** of electricity, and is one that always flows in the same direction. An **alternating current,** on the other hand, is one that changes the direction in which it flows in a conductor regularly a definite number of times per second. Alternating current is not produced by chemical action, but is generated by mechanical means.

CIRCUITS

22. An **electric circuit** is a path composed of a conductor or of several conductors joined together, through which an electric current flows from a given point around the conducting path back again to its starting point. A circuit is **broken,** or **open,** when its conducting elements are disconnected in such manner as to prevent the current from flowing. A circuit is **closed,** or **complete,** when its conducting elements are so connected as to allow the current to flow. A circuit in which the conductors have come into contact with the ground, or with some electric conductor leading to the ground, is said to be a **grounded circuit,** and the contact is called an **earth,** or a **ground.** In automobile practice, a grounded circuit is one that is completed through the engine and frame of the car, the wire connected to the frame or engine being called the *grounded connection,* even though there is no connection whatever with the earth.

The path of the current through the wires outside of the cell shown in Fig. 2 is the **external circuit,** and that through the cell from terminal to terminal is the **internal circuit.** If any electrical apparatus is connected into the external circuit, so that the current must pass through it, the apparatus forms a part of the external circuit. A circuit divided into two or more branches, each branch transmitting part of the current, is a **divided circuit**; the conductors forming these branches are said to be connected in *parallel*, or *multiple*. Each branch taken separately is called a **shunt** to the other branch or branches.

23. Resistance and Voltage of a Cell.—The voltaic, or galvanic, cell itself offers internal resistance to the flow of current through it. This resistance must be taken into account when calculating the current, if the internal resistance is appreciably great in proportion to the external resistance of the circuit. The resistance of dry cells varies greatly, but the usual form of cell, which is 2½ in.×6 in. in size, generally has a resistance not exceeding .4 ohm, provided it is in good condition and is not too old. The internal resistance of the cell causes the difference of potential at its terminals to decrease as the current in the external circuit increases. The voltage across the battery terminals is therefore less than when the circuit is open and the cell idle.

The voltage of a dry primary cell with carbon and zinc elements varies from 1.3 to 1.6 on open circuit. When the external circuit is closed and the current is flowing, the pressure drops. The greater the amount of current delivered by the cell, the greater is the drop in pressure.

EXAMPLES FOR PRACTICE

1. The total resistance of a closed circuit is 23 ohms. If the current is 1.4 amperes, what is the total electromotive force in volts?
Ans. 32.2 volts

2. A difference of potential of 11 volts exists between the terminals of a conductor whose resistance is 20 ohms. Find the current flowing through the conductor.
Ans. .55 ampere

3. A circuit has an available pressure of 20 volts. What is its resistance if a current of 3 amperes can flow through it?
Ans. 6⅔ ohms

MAGNETS AND MAGNETISM

NATURAL MAGNETS

24. Near the town of Magnesia, in Asia Minor, the ancients found an ore that possessed a remarkably attractive power for iron. This attractive power they named **magnetism,** and a piece of ore having this power was termed a **magnet.** The ore itself has since been named **magnetite,** and in early times was found to have the peculiar property of swinging, when freely suspended, so that the same end always pointed toward the north. Owing to this fact, ships could be steered in any desired direction by its aid, because one end of a small piece of the stone so suspended would always point to the north. From this fact, the name **lodestone** (meaning *leading stone*) was given to the natural ore.

ARTIFICIAL MAGNETS

25. When a bar or a needle of hardened steel is rubbed with a piece of lodestone, it acquires magnetic properties similar to those of the lodestone without the latter losing any of its magnetism. Such bars are called **artificial magnets.**

Artificial magnets that retain their magnetism for a long time are called **permanent magnets.** A piece of hardened steel can also be more or less permanently magnetized by rubbing it lengthwise with a permanent magnet. The common form of permanent magnet is a bar of steel bent in the shape of a horseshoe and then hardened and magnetized. A piece of soft iron called an **armature,** or **keeper,** is placed across the two free ends to prevent the magnet from losing its magnetism.

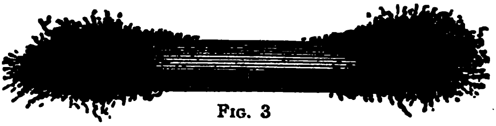

FIG. 3

26. If a bar magnet is dipped into iron filings, the filings will be attracted toward the two ends and will adhere there in tufts, as shown in Fig. 3, while toward the center of the bar, half way between the ends, there is no such tendency. That part of the magnet where there is no apparent magnetic attraction is called the **neutral region,** and the parts around the ends where the attraction is greatest are called **poles.**

27. If the north pole of one magnet is brought near the south pole of another magnet, *attraction* takes place; but if two north poles or two south poles are brought together, they *repel* each other. In general, *like magnetic poles repel each other and unlike poles attract each other.*

28. The earth is a great magnet whose magnetic poles coincide nearly, but not quite, with the true geographical north and south poles. By the laws of attraction and repulsion just given, it is seen, therefore, why a freely suspended magnet will always point in a north-and-south direction, as in the case of the magnetic compass, which consists of a magnetized steel needle resting on a fine point so as to turn freely in a horizontal plane. The north-seeking pole of a magnetic needle or other magnet is known as a **north pole** though of opposite polarity to the north pole of the earth; and the opposite end of the magnet is called a **south pole.** If it were customary to do so, it would be more correct to call the north-seeking pole a south pole, or to call the earth's north pole a south pole. It is impossible to produce a magnet with only one pole. If a long bar magnet is broken into any number of parts, each part will still be a magnet and have a north and a south pole.

29. All magnetic substances are not necessarily magnets; nevertheless, they are capable of being attracted by a magnet. A piece of soft iron will be attracted toward either pole of a magnet; but when not in the vicinity of a magnet it has no defined poles, nor will it attract another piece of unmagnetized iron.

30. Magnetic Lines of Force.—If a sheet of paper is laid over a bar magnet, and fine iron filings are sprinkled on the paper, the filings will arrange themselves in curved lines extending from the north to the south pole, as shown in Fig. 4, in which *N S* is the bar magnet. If the magnet is placed in a vertical position with the paper over one end, the filings will arrange themselves in lines extending radially in all directions from the pole *N*, as shown in Fig. 5. These invisible **lines of magnetic force** or simply **lines of force,** acting in the directions shown, make up the **magnetic field** of a magnet, or the surrounding space in which magnetic substances are acted on by the magnet. The lines of force as a whole may be referred to by any of the expressions *magnetism*, *magnetic induction*, or *magnetic flux*.

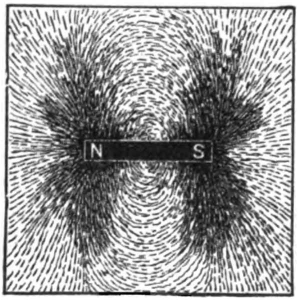

FIG. 4

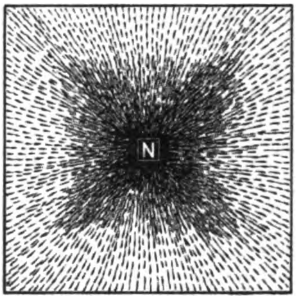

FIG. 5

31. The **direction of the lines of force** is assumed to be from the north to the south pole through the air or other surrounding medium, and from the south to the north pole through the magnet, thus completing the **magnetic circuit.** Lines of force can never intersect one another. In the magnet the lines are crowded closely together; but, as soon as they leave the magnet, they separate as widely as possible at the north pole and converge again at the south pole, as shown in Figs. 4 and 5. The **magnetic density** is therefore greatest in or near the iron, and decreases as the distance from the magnet increases.

32. The permanent magnets used in magneto generators are generally **U**-shaped, as shown in Fig. 6. The magnetic field is much stronger in the space between the poles than in any other region outside of the magnet itself. The direction of the magnetic lines of force is indicated by the dotted lines and arrowheads.

By placing an iron keeper between the poles of the magnet, as shown in Fig. 7, the magnetic flux will be confined to the iron keeper, which offers less resistance, or reluctance, to the magnetic flux than does the air, and few or no lines of force will pass through the surrounding air.

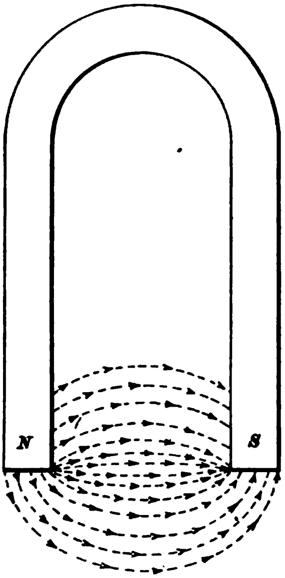

Fig. 6

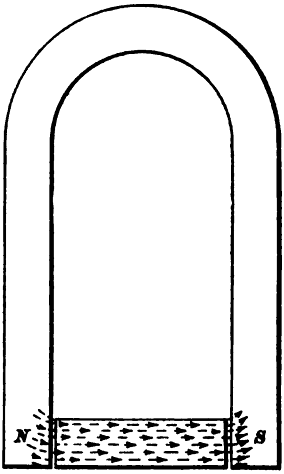

Fig. 7

33. The only useful magnetic materials are iron and steel. The latter is, of course, made up chiefly of the element iron. Therefore, the presence of a piece of any other material, such as copper, brass, bronze, tin, zinc, wood, rubber, etc., in the magnetic field will not change the direction of the lines of force or the intensity of the magnetic flux. It should be remembered that commercial sheet tin is made of iron or steel coated with tin, and that some forms of wire and rod that appear like other metals on the surface, are iron or steel coated with the other metal.

ELECTROMAGNETS

34. If a piece of copper wire wrapped with cotton or silk thread is wound around a wire nail, and the ends of the wire are connected to the cell or battery terminals, as shown in Fig. 8, evidence that a current of electricity is flowing through the wire will be given by the nail becoming a magnet that will attract and hold small pieces of soft iron, such as iron filings, or even small iron tacks. If the current is broken when a tack is hanging to the magnetized nail, the tack will drop off because the nail then ceases to be a magnet, or at least a magnet strong enough to hold the tack. When the circuit is again closed, the nail will again hold the tack. The coil of wire together with the electrically magnetized nail form what is known as an **electromagnet.** The wire winding is called the **magnetizing,** or **exciting coil,** and the iron or steel (nail in this case) is the **core.** One end of the nail will be a north magnetic pole and the other end a south magnetic pole.

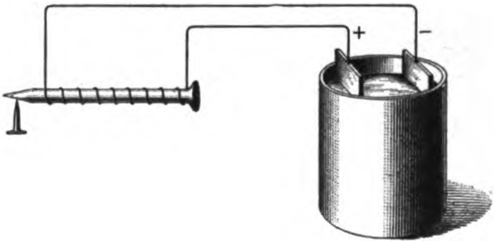

FIG. 8

An electromagnet loses nearly all its magnetism as soon as the current ceases to flow. A small amount, known as **residual magnetism,** is usually retained, the amount retained being greater in cores of steel or hard iron than in soft ones.

35. Solenoid.—When a conductor is bent into a long helix of several loops, forming a **solenoid,** as shown in Fig. 9, and a current is sent through it in the direction indicated by the small arrows at the ends of the conductor, the magnetic flux will thread through the entire solenoid, entering at one end and passing out at the other, as indicated by the long arrows. The solenoid then possesses a north and a south pole, a neutral region, and all the properties of attraction and repulsion of a magnet.

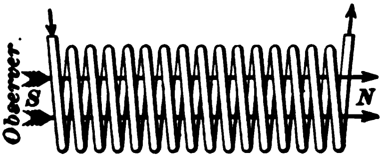

Fig. 9

36. The **polarity** of a solenoid, when carrying a current, that is, the direction of the lines of force that thread through it, depends on the direction in which the conductor is coiled and the direction of the current in the conductor.

To determine the polarity of a solenoid, knowing the direction of the current, the following rule may be applied:

Rule.—*In looking at the end of a helix, if the current circulates in a clockwise direction, the end next to the observer is a south pole; if it circulates in the other, or counter-clockwise, direction, the end next to the observer is a north pole.*

Fig. 9 illustrates the first condition mentioned in the rule. With the position of the observer and the direction of the current as indicated, the end toward the observer is the south pole *S* and the other end is the north pole *N*.

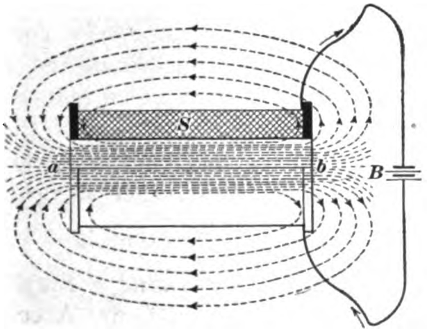

Fig. 10

37. Around a solenoid the lines of force make complete magnetic circuits, exactly the same as around a bar magnet. Fig. 10 shows the direction of the invisible lines of force around a solenoid *S*. As shown, the lines enter at *a*, leave at *b*, and complete the circuit through the surrounding medium. The current that magnetizes the solenoid, that is, the ***exciting current***, is supplied by the battery *B*.

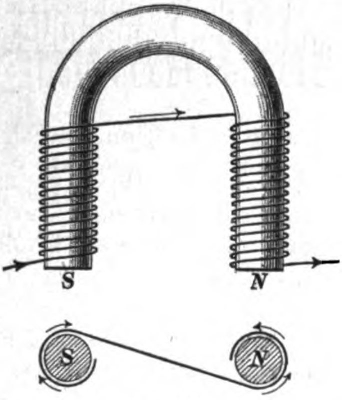

FIG. 11

38. Horseshoe Electromagnet.—Fig. 11 shows the general form and construction of a **horseshoe electromagnet.** A soft-iron bar is bent into a **U** shape, leaving two straight sides on which the magnetizing coils are wound. The coils must be so wound that the current will flow around the cores in opposite directions, as shown by the curved arrows in the end view; this will make one core a north pole *N* and the other a south pole *S*. The part of the iron bar connecting the cores at the back end is called the **yoke** of the magnet.

ELECTROMAGNETIC INDUCTION

39. Electromagnetic induction is the production of electromotive forces in a conductor or a number of conductors by relative motion between the conductors and a magnetic field in their vicinity. The strength of an induced electromotive force is proportional to the quickness of the relative motion and to the strength of the magnetic field; that is, the more quickly the motion or the stronger the field, the higher is the induced electromotive force.

40. Fig. 12 shows the method of performing a simple experiment to illustrate electromagnetic induction. A coil of wire *a*, large enough to allow a solenoid *b* to be readily inserted into it has its ends *c* and *d* wound a few times around a compass *e* and joined together. The magnetizing or exciting current for the solenoid *b* is supplied by the battery *f* through the wires *g* and *h*. When the solenoid *b* is thrust into the coil *a* or withdrawn from it, the needle of the compass is deflected, showing that an electric current flows in the wire wound around the compass. The relative motion of the electromagnet *b* and the coil *a*, one within the other, causes an electromotive force to be induced or generated in the coil *a*, and an electric current results. If the two coils remain stationary, one within the other, and the exciting current of the solenoid is steady, the needle is not affected; but, whenever either coil is moved with reference to the other, the needle will be deflected—one way for relative movement in one direction and the other way for movement in the other direction.

Furthermore, if the coil *b* is placed inside of coil *a* and the current in coil *b* is rapidly altered in strength, as for instance, by opening or closing the circuit containing the coil *b* and battery *f*, a current will be induced in coil *a*. The current induced in coil *a* will flow in one direction when the circuit of *b* is closed or the strength of the current in *b* is rapidly increased, and in the opposite direction in coil *a* when the circuit of *b* is opened or the strength of the current in *b* is rapidly decreased. The closing and opening of the circuit of *b*, thereby inducing a current in *a* first in one direction and then in the opposite direction, is the action that takes place

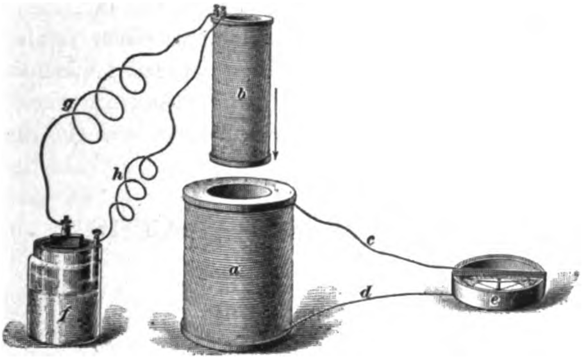

Fig. 12

in practically all automobile induction coils. However, to increase the strength of the induced current in the coil *a*, the coil *b* is invariably filled with soft-iron wire. Since the iron wire is more permeable than air to magnetic lines of force, more of them are produced both inside and outside of the solenoid *b* when it is filled with iron than when it is filled with air. Although the lines of force outside the coil are always equal in number to those inside, they are farther apart and the outside magnetic field is therefore less intense.

The effect of inserting a magnetized piece of iron, as for instance, a permanent bar magnet, in a coil or withdrawing it from the coil, is the same as would be produced by putting one coil, through which a current is flowing, within another coil or by withdrawing it. In each case a current is induced in the outer coil.

If the number of lines of force through the coil *a*, Fig. 12, is unchanging, as when the solenoid or the magnet is held stationary with reference to the coil, no effect is shown by the needle; but every time a change occurs in the number of lines of force enclosed by the coil *a*, an electromotive force is induced in it, and the resulting current causes the needle to deflect.

IGNITION APPARATUS

BATTERIES

DEFINITIONS AND CLASSIFICATION

41. When a number of cells are connected together, as is customary in practice, they form an **electric battery.** In commercial usage, however, the term battery is indiscriminately applied both to a group of electrically connected cells and to a single cell; a single cell is also known as a *battery cell.*

42. In electrical diagrams, cells are represented as in Fig. 13; *M* and *N* each represent a single cell, *a* and *c* being the positive electrodes and *b* and *d* the negative electrodes. The two cells joined together as shown constitute a battery, *a* and *d* representing the terminals of the battery, as well as the positive electrode of *M* and the negative electrode of *N*, respectively. The closed loop connecting *a* and *d* is a *circuit*. The arrows indicate the direction in which the current flows.

43. The electric batteries used for ignition purposes are of two distinct classes: *primary batteries* and *secondary*, or *storage*, *batteries*. Secondary batteries are also known as *accumulators*. The primary battery will deliver electric current as soon as its parts are assembled, but with the storage battery, electricity from some separate source of supply must be stored in it before it becomes electrically active. The primary batteries used on automobiles are known as *dry batteries*, because they have no free body of liquid to flow and splash. Primary batteries having a free body of liquid are called *wet batteries*, the principles of which have been described in connection with the cell shown in Fig. 2.

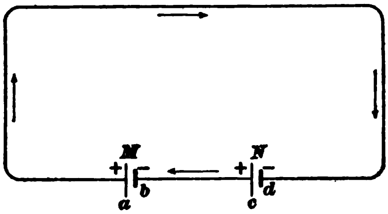

Fig. 13

POLARIZATION AND DEPOLARIZATION

44. If the circuit shown in Fig. 8 is left closed for a considerable time and the tack then pulled off, it will be found that the electromagnet will not hold the tack again, although the electric circuit has remained closed all the time; or, if the apparatus is left standing with the circuit closed and the tack suspended from the nail, the tack may become loose and fall off of its own accord, generally after a long time. That this dropping may occur, the tack should be of about as great a weight as the magnet will support when the electric circuit is first closed. The failure of the nail to hold the tack after the current has been flowing continuously for some time is due to a decrease in the amount of current flowing. The chemical action in the cell or battery required to produce the electric current liberates hydrogen gas, which collects as small bubbles on the carbon and prevents intimate contact between the carbon and the electrolyte, and the cell is then said to be **polarized.** This polarization reduces the amount of chemical action, and consequently less current is produced. If the surface of the carbon is made very large in proportion to that of the zinc, the polarization does not occur so rapidly, nor is it so decided as in a cell of the proportions shown in Fig. 2, which is about 8 inches high.

If the electric circuit is broken, and the apparatus is left standing on open circuit for a few minutes and then closed, the current will again be sufficient to magnetize the nail so as to support the tack. The battery thus recuperates by *depolarizing* itself while resting. Besides the objection to the use of a liquid, such a battery is not suitable for automobile ignition because of polarization.

45. Depolarization is accomplished chemically by surrounding the carbon plate with some substance with which the free hydrogen can combine. There are many kinds of depolarizing primary cells, some with solid and some with liquid depolarizers.

PRIMARY BATTERIES

46. Wet Cells.—Although serviceable for ignition purposes with stationary gas and gasoline engines, battery cells of the wet type are not suitable for use on automobiles, because they are usually easily broken. Besides, they are too bulky, and the motion of the car causes the liquid electrolyte to be thrown out of the jar. For use on portable traction gasoline-engine outfits, the manufacturers of the Edison-Lalande wet cell make a steel, porcelain-enameled jar that can be made liquid tight, but the number of cells necessary to obtain the required voltage for automobile-engine ignition, and also the large space required, precludes the feasibility of using them for that purpose, even though such cells have a much longer life than the dry type of cell commonly employed.

47. Dry Cells.—Fig. 14 shows a section of a **dry cell** such as is used for automobile ignition. The carbon rod *c* is placed in the center, and the zinc forms the enclosing cup, or a can *a*. Next to the can is a lining *p* of absorbent paper that is completely saturated with a liquid electrolyte consisting of sal ammoniac and zinc chloride dissolved in water, and next to the paper is a thin layer *d* of white paste. The space between the carbon rod and the lining of the cup is filled, except at the top, with the depolarizer *m*, which is a mixture of powdered carbon or coke and manganese dioxide. The cell is sealed water-tight with pitch or some similar substance, which fills the space above the depolarizer, and is permanently wrapped, except over the top, with pasteboard and paper, to prevent metallic contact with other cells in a battery.

The positive terminal is at the center of the top, and the negative terminal is a binding screw attached to the top edge of the zinc cup. The cell generally used for automobile ignition is 2½ inches in diameter and 6 inches long. Other dry cells similar in general appearance to the one just described, but differing in some of the materials employed, are also extensively used for ignition.

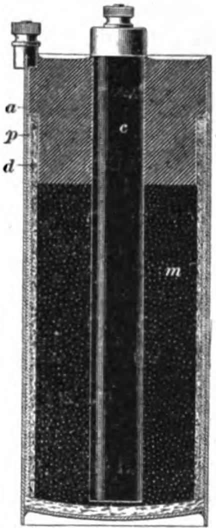

Fig. 14

Dry cells of the size just mentioned usually have, when new and in good condition, an internal resistance of from .1 to .7 ohm and an electromotive force of 1.3 to 1.6 volts. As a rule, the best dry cells will not remain in good condition more than 2 or 3 years; and good results should not be expected from cells that have been kept in stock for only 1 year.

BATTERY CONNECTIONS

48. If it is desired to have more current than one cell will give, this increased current can be obtained by connecting cells together. Evidently, two cells can be connected in two ways: Either the positive (+), or carbon-plate, terminal of one cell can be connected to the negative (−), or zinc-plate, terminal of the other (carbon to zinc), as in Fig. 15, which shows a *series connection;* or similar terminals can be connected together, as in Fig. 16, which shows a *multiple*, or *parallel, connection*. Both of these arrangements will give more current than will a single cell under any condition.

If the external resistance of the circuit is greater than the internal resistance of one cell of a battery made up of the same size and kind of cells, which is usually the case in automobile service, then series connection will give more current than parallel connection. In Fig. 15 and succeeding diagrams of wiring connections, the positive, or carbon-plate, terminal is located at the center of each cell, the negative, or zinc-plate terminal being placed at the edge of each cell, as is customary in actual practice.

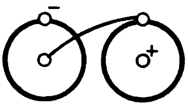

FIG. 15

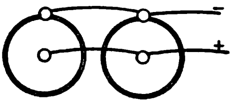

FIG. 16

49. Series-Battery Connections.—If two or more cells are connected in series, as in Fig. 15, the positive terminal of one and the negative terminal of the other become the terminals of the battery. The voltage of the battery is measured between the battery terminals. When the circuit is open, as shown, the voltage of the two-cell series-connected battery is twice that of one cell, provided the cells are alike or have the same voltage. In any case, the battery voltage of series-connected cells on open circuit is equal to the sum of the voltages of the two cells. If each cell gives 1.5 volts, then the battery of two series-connected cells will give $2 \times 1.5 = 3$ volts. If four cells are put in series, as in Fig. 17, the voltage will be $4 \times 1.5 = 6$ volts. Six cells in series will give $6 \times 1.5 = 9$ volts.

In series-connected cells, the internal resistance of the battery is increased by the addition of cells. Thus, the resistance of a two-cell series battery is twice that of a single cell, provided the cells are alike and in the same condition; of a four-cell battery, four times that of a single cell; and of a six-cell battery, six times that of one cell.

50. The total resistance of a circuit containing primary cells is equal to the internal resistance of the battery plus the resistance of the external circuit. The resistance of a given external circuit remains approximately constant, while the internal resistance varies with the number of cells constituting the battery. Hence, the total resistance does not vary in direct proportion to the number of cells in the battery. For instance, if the external resistance is 5 ohms and the battery consists of six cells, each having an internal resistance of .4 ohm, the internal resistance will be $6 \times .4 = 2.4$ ohms, and the total resistance of the circuit will be $2.4 + 5 = 7.4$ ohms. If two cells are added, the internal resistance will be 3.2 ohms and the total resistance 8.2 ohms. It will thus be seen that the total resistance of the circuit does not vary proportionally with the number of cells; in other words, the total resistance increases less rapidly than the number of cells. Now, it has been shown that the electromotive force of a battery of similar cells is proportional to the number of cells; that is, if the voltage of six cells is $6 \times 1.3 = 7.8$, the voltage of eight similar cells will be $8 \times 1.3 = 10.4$.

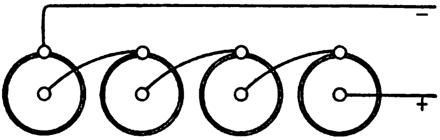

FIG. 17

The current flowing in a circuit containing a battery and an external resistance is equal to the voltage of the battery measured on open circuit divided by the total resistance of the circuit.

EXAMPLE 1.—If there are six cells, each having an open-circuit voltage of 1.3 and an internal resistance of .4 ohm, what current will flow through an external circuit of 5 ohms?

SOLUTION.—The voltage of the battery is $6\times1.3=7.8$; the internal resistance, $6\times.4=2.4$ ohms; and the total resistance of the circuit, $2.4+5=7.4$ ohms. Therefore, the current through the entire circuit is $7.8\div7.4=1.05$ amperes. Ans.

EXAMPLE 2.—If there are eight cells, each having an open-circuit electromotive force of 1.3 volts and an internal resistance of .4 ohm, connected to an external circuit of 5 ohms, what current will flow through the circuit?

SOLUTION.—The voltage of the battery is $8\times1.3=10.4$ and the internal resistance, $8\times.4=3.2$ ohms. Therefore, the total resistance of the circuit is $5+3.2=8.2$ ohms, and the current through the circuit is $10.4\div8.2=1.27$ amperes. Ans.

51. Reversed Connections in Series Battery.—If one of the cells in a series battery is reversed, as shown in Fig. 18, the voltage on open circuit will be reduced to the same extent as if two cells had been removed from the properly connected battery of the same number of cells. The pressure of the reversed cell counteracts the pressure of one of the properly connected cells. Primary cells in a series battery are not injured by the reversal of one or more of them.

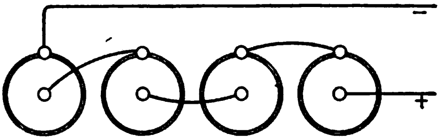

FIG. 18

52. Multiple or Parallel Battery Connections.—If two or more cells are connected in parallel, carbon to carbon and zinc to zinc, the carbon side will be the positive terminal and the zinc side the negative terminal, as shown in Fig. 19. The voltage, or pressure, remains the same as for one cell. The internal resistance of the battery is reduced below that of one cell, because there is a greater sectional area of battery materials for the current to pass through. Therefore, the total resistance of the complete circuit, external plus internal, is reduced by increasing the number of parallel-connected cells. As the pressure remains unchanged, the ratio of the pressure to the total resistance is increased, and this means an increase of current. The internal resistance of two similar cells in parallel is half that of one cell; of four similar cells in parallel, one-fourth that of one cell, and of six similar cells, one-sixth that of one cell. All the cells of a parallel-connected battery should be of the same make, or at least made of the same materials, and should have the same voltage. It is best to have all of them just alike. If cells giving different pressures are used, the action will be similar to that described in the next article.

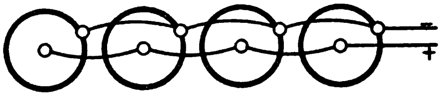

FIG. 19

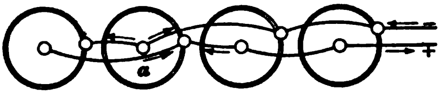

FIG. 20

53. Reversed Connections in Parallel Battery.—If one of the cells in a parallel-connected battery is reversed, as shown at *a*, Fig. 20, the current will flow, as indicated by the arrows, until the cells properly connected in parallel are exhausted. The reversed cell corresponds in a way to a closed external circuit, which, with dry cells, is of small or low, resistance. Hence, the real external circuit will receive practically no current.

EXAMPLE.—If a battery consisting of two cells connected in parallel, each cell having a voltage on open circuit of 1.3 and an internal resistance of .4 ohm, is connected to an external circuit of 5 ohms, what will be the current in the external circuit?

SOLUTION.—The voltage of the battery is 1.3; the internal resistance, $.4 \div 2 = .2$ ohm; and the total resistance of the circuit, $.2 + 5 = 5.2$ ohms. The current in the external circuit is therefore $1.3 \div 5.2 = .025$ ampere. Ans.

54. Parallel-Series Battery Connections.—If two series batteries of the same number of like cells are connected in parallel, as in Fig. 21, the pressure will be the same as that of one series. Each series of cells may be considered as a unit and may be dealt with as a single cell having a pressure and a resistance equal to that of the series. Thus, if the series consists of four cells having a pressure of 1.5 volts each, the pressure of the unit will be $4 \times 1.5 = 6$ volts, and the internal resistance of the unit will be four times that of one cell. The internal resistance of a battery of two series sets, each set of the same number of cells, is one-half that of one set, or unit. For three series of four cells each, the internal resistance is one-third that of one set having four cells in series. When there are as many series as there are cells in each series, the internal resistance of the battery is the same as that of one cell.

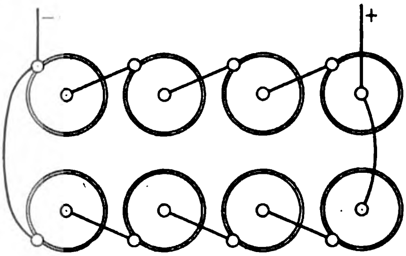

FIG. 21

Each series of cells forming a unit should have the same number of cells; otherwise, the higher pressure of the series having the greater number of cells will force current back through the series having the smaller number and exhaust the cells in the larger series. A reversed cell in a parallel-series battery has much the same bad effect as a reversed cell in a single parallel arrangement of cells, as explained in the preceding article.

EXAMPLE.—A battery consists of eight cells connected in two parallel rows of four cells in series in each row. Each cell has an electromotive force of 1.3 volts and an internal resistance of .4 ohm. What current will flow from this battery through an external circuit of 5 ohms?

Solution.—The voltage of one row of four cells in series is $4 \times 1.3 = 5.2$. Putting cells in parallel does not increase the voltage; hence, the voltage of two parallel rows of cells is the same as that of one row, and in this case the voltage of the battery is 5.2. The internal resistance of one row is $.4 \times .4 = 1.6$ ohms; but two rows in parallel will have one-half the resistance of one cell. Hence, the internal resistance of the battery is $1.6 \div 2 = .8$ ohm. The total resistance, therefore, is $.8 + 5 = 5.8$ ohms, and the current in the external circuit is $5.2 \div 5.8 = .896$, or .9, ampere. Ans.

55. Increasing the number of good cells in an ignition circuit will increase the current in the circuit, provided, of course, that the cells are properly connected. The total electromotive force is increased as the number of cells in series is increased; or, the internal resistance of the battery is decreased as the number of sets of cells in parallel is increased. In both cases, however, the resistance of the external circuit remains unchanged. Hence, the current is increased in the first case because the electromotive force applied to the circuit increases faster than the internal resistance of the battery increases the total resistance of the circuit. In the second case, the electromotive force and external resistance remain constant, but the internal resistance, and hence the total resistance of the circuit, is decreased. See Arts. **49**, **50**, and **52**.

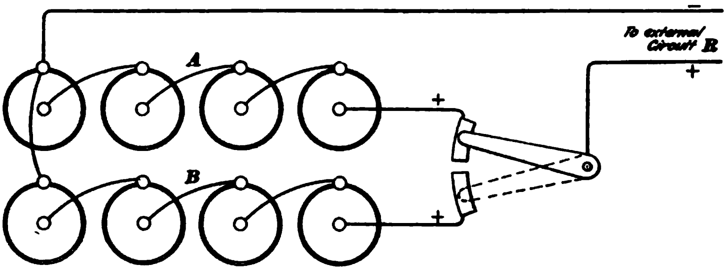

Fig. 22

56. Battery-Switch Connections.—The switch for connecting two series batteries to an external circuit should be made and located so as to break the connections in such a manner, when opened, as to make it impossible for any current to flow between the different sets of cells. Exhaustion of the battery when not in use is thus prevented. Fig. 22 shows the correct method of connecting a switch to a battery consisting of two series of cells. The wires *R* lead to the external circuit. When the switch is closed in the position shown, only series *A* is brought into operation, and when the switch is moved to the dotted position, only series *B* is put into circuit and *A* becomes idle. If the switch is placed in mid-position so that the lever touches both contacts, all the cells are in use, *A* and *B* working in parallel.

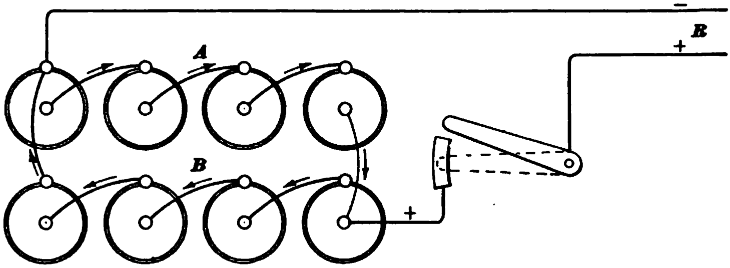

FIG. 23

The arrangement shown in Fig. 23 is not a good way of making the connections, even if the whole battery is always to be cut in when current is wanted. If, in a battery connected in the manner shown, series *A* happens to be in better condition than series *B*, which may be taken to mean that its pressure is higher, current will flow in the direction indicated by the arrows when the switch is open. This flow will continue until the pressure of series *A* has fallen to the same as that of series *B*.

SECONDARY, OR STORAGE, BATTERIES

57. The activity of a **storage battery, accumulator,** or **secondary battery** depends on internal chemical action produced by passing an electric current through it from some external source of supply. This operation is called *charging* the battery. After the battery is charged, it will discharge through a closed circuit nearly the same quantity of electricity as was used to bring about the original chemical action. The positive terminal of a storage battery is the one by which the charging current enters and the discharging current leaves. The majority of storage batteries used for electric ignition may be called *lead accumulators*, since lead and its oxides enter most prominently into their construction. In some of the other types of storage batteries less used, but gaining in prominence, iron and nickel are used instead of lead.

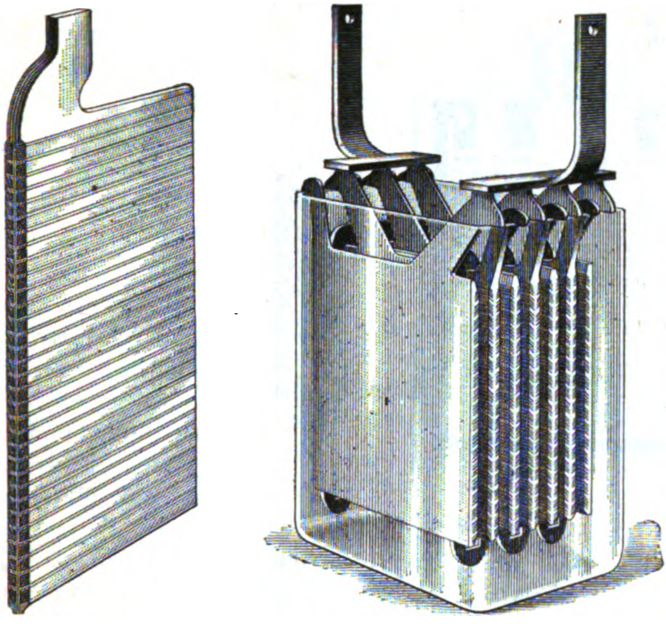
(*a*) (*b*)

FIG. 24

58. The **plates,** or **grids,** of a lead accumulator are made either of lead, or lead alloy, with pockets, grooves, or recesses for holding the active material. They also have heavy lugs, or shoulders, to which the terminals are attached. In Fig. 24 (*a*) is shown a single plate, the minute grooves of which are filled with lead oxide, and in (*b*) is shown a complete cell with the plates assembled in a glass vessel. The lugs on alternate plates are connected together by a strip of the same material as is used for the metal of the plates, an extension of which forms one of the terminals of the cells. The remaining plates are fastened together and are provided with a terminal in a similar manner. The terminal strips are attached to the plate by melting, or *burning*, the parts together where they are in contact. The vessel is filled with an electrolyte of dilute sulphuric acid, so as to cover the plates completely.

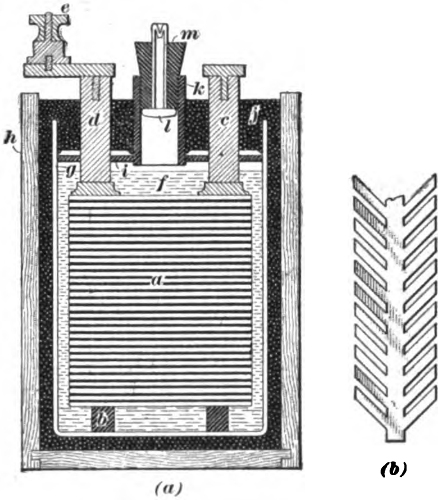

FIG. 25

59. The containing vessel of the battery may be either of glass or of rubber, and where lightness and compactness are desirable, as in batteries for automobile ignition, this vessel is sometimes made of or lined with lead and may be utilized to serve as one of the plates. In any case, the plates are arranged quite close to each other. Strips or other forms of insulating material are placed between the plates to prevent them from coming into metallic (electric) contact. Some of the insulating materials thus used as plate separators are glass, hard rubber, and wood.

60. There are two general types, or classes, of lead accumulators, named from the inventors of the methods of making the plates. These are the **Planté type,** in which the plates are formed by electrochemical action that causes a deposit of an oxide of lead on the plates, and the **Faure type,** in which the oxide is made into the form of paste and put into suitable grooves, or recesses, in the sides of the plates. Lead oxide is the active material in each case.

61. Fig. 25 (*a*) shows a sectional view of a small storage battery made for automobile-engine ignition purposes. At *a* is shown the side of the positive plate supported on hard-rubber insulators *b*, and in (*b*) is shown an enlarged end view of the same plate before forming. When the plate has been electrochemically formed, all the grooves are filled with oxide of lead. The other parts of the cell in (*a*) are as follows: At *c* is shown the positive terminal and at *d* the negative terminal carrying a binding post *e*; at *f*, the electrolyte contained in a hard-lead jar *g*; at *h*, a hardwood case; and at *i*, a hard-rubber cover fitting tightly in the lead case; at *j*, a sealing compound filling the space between the lead jar and the hardwood case and also the space over the cover; and at *k*, a hard-rubber tube that contains a glass valve *l* and is closed by a rubber stopper *m*.

The cell is so effectually closed that it can leak but little, even if turned upside down. The solution used in a storage cell can be made semidry either by using an absorbent or by introducing some substance, such as a silicate of soda, to form a jelly with the acid. There is, however, a tendency for a semidry storage battery to dry out completely and thus become useless. This is especially true in a warm locality.

62. The voltage of a storage cell varies from about 2.5 when fully charged to about 1.7 when completely discharged. The pressure falls rapidly, to the extent of about $\frac{1}{10}$ volt, when the battery first begins to discharge after being fully charged. When the voltage has dropped to about 1.7 per cell, the battery should be recharged, because it retains only a comparatively small amount of electric energy at this pressure, and the voltage drops rapidly during discharge after getting this low. The life of the battery is shortened by discharging below 1.7 volts per cell.

Storage batteries for ignition purposes are generally made up of either three cells in series, giving an average voltage during discharge of about six, or two cells in series, with an average discharge pressure of about 4 volts. These two pressures are adapted to meet the requirements in operating induction coils.

The electric resistance of a storage cell such as is used for automobile ignition is generally higher than that of a storage cell used for the propulsion of automobiles and other vehicles, but it is far lower than that of a dry cell as ordinarily constructed. If a storage cell is short-circuited, the flow of current will be excessive and injurious to the battery. The maximum rate at which a storage cell or battery should be charged and discharged is generally indicated on instructions that accompany the battery.

63. The capacity of a storage battery is generally stated in *ampere-hours*. If a battery discharges continuously at the rate of 2 amperes for 30 hours, its capacity is $2 \times 30 = 60$ ampere-hours. Such a battery will deliver 4 amperes for 15 hours, or 1 ampere for 60 hours. The battery will deliver a slightly greater number of ampere-hours when discharged slowly, as in ignition use, than when the discharge is rapid.

64. Charging of Storage Batteries.—A direct current must always be used for charging the storage battery. In case only an alternating current is available, an alternating-current rectifier of some kind must be used for changing it into direct current.

When charging a battery from any source, especially if there is any doubt as to the direction of flow of the current, a test should be made to make sure that the positive plates are connected to the positive terminal of the charging circuit. A simple way to make this test is to attach two wires to the source of current supply and then dip their free ends into water made slightly impure by the addition of a salt or an acid. Sulphuric acid, sal ammoniac, or common salt will serve the purpose. The ends of the wires should be kept well apart at first and then gradually brought nearer together, but they should be allowed to touch each other until bubbles of gas are given off at one of the wire ends. Bubbles may be given off at both ends, but they will come much more rapidly from the negative end than from the positive end. The immersed wire end that gives off most bubbles is the one to be connected to the negative terminal of the storage battery; the other wire should go to the positive terminal of the storage battery. The positive terminal of a storage battery for automobile ignition is generally indicated by the (+) sign, and sometimes it is painted red. The polarity of the storage-battery terminals may also be determined in the foregoing manner.

If the source of current supply is of considerable capacity, so that a short circuit would be injurious, the vessel containing the water into which the wire ends are dipped should be of glass or some other insulating material so as to avoid short circuiting, and the supply circuit should contain a fuse having, preferably, a capacity of 5 amperes or less. If the voltage is high, resistance should be put in series with the submerged wires, so as to prevent injury in case they get too near together.

There are several other simple methods of determining which is the positive side of the source of the current supply. Among these are the turning red or blue of a solution by the passage of a current through the liquid. Small and convenient sealed-glass-tube instruments depending on this action are in use. The positive and negative sides are generally indicated on the instrument. Some electric-pressure measuring instruments can be used for the same purpose. When such instruments are properly connected across the circuit, the voltage of the circuit will be indicated; when incorrectly connected across the circuit either no indication will be given, or a deflection in the wrong direction will occur.

65. The battery should be charged not more rapidly than at a rate determined by its capacity in ampere-hours, the charging current, in amperes, being equal, for an ordinary battery, to the ampere-hour capacity divided by 8. Thus, a

60-ampere-hour battery should be charged at 7.5 amperes or an 80-ampere-hour battery at 10 amperes. Another, and perhaps better, rule is to charge at a rate not exceeding one-sixth the ampere-hour capacity, and then maintain this rate by gradually cutting out resistance until the voltage reaches 2.4 or 2.5 per cell, when the cells begin to gas. The charging current should then be cut down to one-twentieth the ampere-

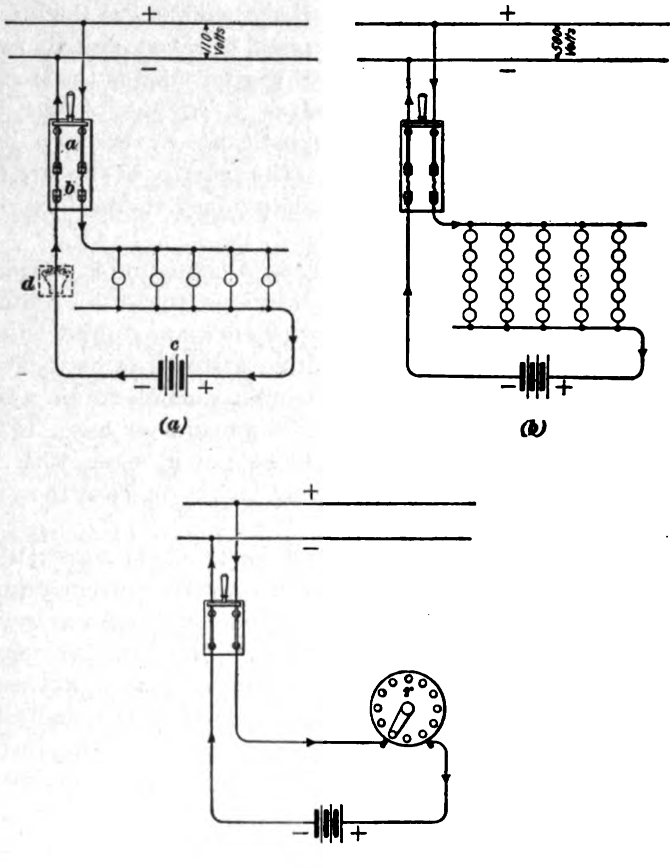

(a)

(b)

(c)

Fig. 26

hour capacity until the cells again gas freely, indicating a full charge.

If the battery is charged from a direct-current, incandescent-light circuit, there must be used in series with the battery a resistance sufficient to absorb the greater portion of the voltage of the charging circuit. For this purpose, a bank of lamps is generally employed. As the internal resistance of the battery is so small as to be almost negligible, it follows that a 100-volt lamp must be used for each 100 volts tension of the charging current, or a 110-volt lamp for a 110-volt current.

66. Wiring connections for charging storage batteries from direct-current lighting and power circuits are shown diagrammatically in Fig. 26. Connections to a 110-volt lighting circuit are shown in (*a*). A double-pole switch *a*, with fuses *b*, is connected between the mains and the battery, as shown. In series with the battery *c* is a number of lamps, by means of which the charging current is limited to the proper amount. It is advisable to connect an ammeter *d* in circuit, though this is not absolutely necessary.

The number of lamps required depends on the line voltage and on the charging rate of the cells. If the line pressure is 100 to 120 volts and only three or four cells are to be charged with a current of 5 amperes, then five 32-candlepower lamps requiring 1 ampere each, connected in multiple, as shown in (*a*), will be sufficient. If 16-candlepower lamps requiring ½ ampere each are used, it will be necessary to connect ten in parallel. With a 220-volt circuit, there will be required twice as many lamps as with the 110-volt circuit, the second set of lamps being placed in series with the first. If the line pressure is 500 volts, it will be necessary to connect twenty-five 32-candlepower lamps in five rows of five lamps in series in each row, as shown in (*b*), or fifty 16-candlepower lamps in ten rows, five lamps in series in each row. In case it is convenient to charge at a lower rate, fewer rows of lamps will be needed, but the time for charging will be proportionately increased.

To charge a low-voltage battery, such as an ignition storage battery, from a 500-volt, direct-current circuit is a very inefficient method. The high voltage makes it somewhat dangerous and requires that very good insulation be used throughout the circuit.

67. Lamps form a convenient resistance, as they are easily obtained, but an adjustable rheostat is frequently used, as shown at *r*, Fig. 26 (*c*). The amount of resistance required in the rheostat may be calculated by subtracting the approximate voltage at which the storage battery should be charged from the charging line of voltage, and then dividing this difference by the desired charging current.

EXAMPLE.—A 6-volt ignition storage battery is to be charged from a 110-volt circuit. How much resistance should be connected in series with it, if the charging current is to be 4 amperes?

SOLUTION.—The difference between 110 and 6 is 104 volts. Therefore, $104 \div 4 = 26$ ohms. Ans.

This resistance should be adjustable, so that some of it can be cut out as the voltage of the cells increases, and it must be made of wire large enough to carry at least 4 amperes without overheating.

Charging with resistance in series is at best a makeshift, because it involves a large loss of energy; but in the case of small, portable batteries, this waste is not a very serious matter, especially as the use of the series resistance gives the most convenient and simple means of charging from existing circuits.

68. Recharging of Storage Batteries When Not In Use.—To keep a storage battery in good condition, it should be charged at least once a month, whether used or not, and it should preferably be kept in a cool place. Of course, if its full capacity has not been used, not so many ampere-hours will be required to recharge it. If the battery is not to be used, recharging it once very 2 months may be sufficient, provided the battery is kept in a cold place. It should not, however, be allowed to freeze.

An ordinary ignition storage battery should not be permitted to stand without any solution in it, because in such a case the wooden separating pieces between the plates will rot and the battery will have to be taken to pieces in order to replace them when it is to be used again.

69. Laying Up of Storage Battery.—If the battery must be laid away, say for 6 months or longer, without recharging, proceed as follows: After thoroughly charging the battery, remove the electrolyte into convenient clean bottles or other non-metallic receptacles that can be closed tightly, so as to preserve it for future use. Then refill the battery with fresh, pure water, allow it to stand for 12 or 15 hours, and pour off the water. The plates are then in a condition to stand indefinitely. However, if the plates are held apart by wooden separators, these should be removed before drawing off the water; otherwise, they will rot. If the separators are in good condition, they may be used again, provided they are kept submerged in water. Generally, it will be found better to throw them away and use new separators when the battery is to be used again.

Most ignition batteries are covered with a sealing compound, and to put such a battery out of use in the manner just described, it will be necessary to remove this compound, as well as the plates and their wooden separators, from the case. The compound and plates may be removed, usually together, by running a heated knife between the case and the compound. Before removing the compound and plates, it may be possible to find out from the maker of the battery whether the separators are made of wood or of some other material. If they are made of hard rubber or glass, their removal is unnecessary. Any sediment in the battery should be thoroughly washed out or otherwise removed when the battery is put out of use. Rather than lay an ignition storage battery away with no solution covering the plates, it is usually preferable to give the battery a freshening charge every month, or at least every 2 months.

ALTERNATING-CURRENT CONVERSION FOR BATTERY CHARGING

70. To make use of alternating current in charging storage batteries, it must, as has already been mentioned, be converted into direct current. Two distinct kinds of apparatus are used for obtaining direct current from an alternating-current circuit. One is of the nature of a combined electric motor and electric generator, called a *motor-generator;* the other, known as a *mercury-vapor converter*, or *rectifier*, has no moving parts, except such as are moved for starting it.

71. Motor-Generators.—By connecting an alternating-current electric motor to a direct-current electric generator, so as to drive the latter mechanically, a direct current for storage-battery charging can be obtained from the generator. The electric pressure of the direct current must, of course, be suitable, and an electric resistance, variable at the will of the operator, is usually necessary in order to regulate the amount of current flowing through the storage battery. Instead of using two separate machines, however, it is customary to employ a **motor-generator,** which is a compact machine that appears externally much like an ordinary electric generator, but is really two machines in compact form on the same base.

One common type of motor-generator has two armatures on the same shaft, one being wound for alternating current and the other for direct current. The motor armature has a slip ring and collector brushes, through which the alternating current is led to it, while the generator armature has a segmental commutator and brushes, through which the direct current generated in the armature is transmitted to the circuit containing the storage battery to be charged.

72. Rectifiers.—The operation of a **mercury-vapor rectifying apparatus** for alternating current depends on the fact that the vapor of mercury—a liquid metal much used in thermometers—allows current to flow through it in one direction under certain conditions, but opposes its flow in the opposite direction. Except in some designs, after the apparatus is started, none of its parts move.

73. With some forms of alternating-current rectifiers on the market, dependence is placed on chemical action for rectifying the current; but as now made and used, they appear to be inefficient and expensive to operate when compared with mercury-vapor apparatus.

SPARK COILS

INDUCTANCE, OR KICK, COILS

74. If a short piece of wire is connected to one of the terminals of a dry battery, and the free end of the wire is struck against the other terminal, a small spark will generally appear as the contact between the wire and terminal is broken; that is, at the instant the wire is drawn away from the terminal. If a wire several feet long, say 15 feet of No. 28, B. & S. (.0126 inch in diameter) copper insulated magnet wire, not coiled, is used in the same manner, the spark will be smaller, assuming that the short wire is of the same size as, or at least not much thinner than, the long one. In order to make the case simple, it will be assumed that both wires are of the same thickness. The smaller spark with the longer wire is due to the smaller amount of current that flows through it on account of its greater resistance.

If the longer insulated wire is now wound around a wooden lead pencil into as short a coil as possible, with the turns piled on top of each other, so that there are a hundred turns or more, a more decided spark will be produced, the longer spark being due to coiling of the wire. The spark is stronger when the circuit is broken quickly than when the separation of the contact points is slow.

The current in the coil decreases, of course, from its maximum strength to zero when the connection is broken and the circuit opened. The decreasing current in each turn of the coil acts inductively on the current in the other turns in such a manner as to resist sudden decrease. Consequently, the current continues for a longer time across the space between the separated contact points, and when the points are separated quickly, it also continues across a longer space or a wider gap. The wooden lead pencil has no effect on the spark. This action of the coil is called **self-induction.** Self-induction tends to prevent a rapid change in the strength of an electric current.

75. By substituting a piece of soft iron for the lead pencil, the spark will be made still stronger. This is due to the fact that the iron, which is a magnetic substance, allows the same current in the same coil to produce more lines of force through it. The iron resists any change in its magnetism; hence, the decrease of magnetism in the iron core of the coil as the current decreases tends to prevent a rapid decrease of current.

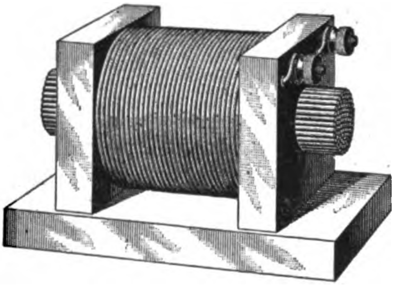

FIG. 27

A change in the current in the coil induces in the iron core electric currents that reduce the rapidity with which the magnetism of the core diminishes, thereby reducing the rapidity with which the current in the coil decreases. Smaller currents are induced in a core made of a bundle of small iron wires than in a core that is solid. This is due to the resistance offered by the dirt, grease, and rust on the surface of the wires. Hence, a wire core causes less decrease in the rapidity with which the current in the coil decreases, and consequently, a greater spark is produced by a given coil with an iron-wire core than one with a solid-iron core.

The reduction of the rate of increase of current when the circuit is closed is of no importance in connection with ignition by the contact method, with which system of ignition inductance coils are used.

76. In technical phraseology, a coil of insulated non-magnetic wire, with a soft-iron core made up as just described is known as an **inductance coil,** but in connection with electric ignition it is variously designated as a *make-and-break coil*, a *primary spark coil*, and a *kick coil.* The term *spark coil* is also applied to it as well as to other types of coils used for ignition purposes. When used in conjunction with a battery that gives enough current, a kick coil of sufficient inductive strength will produce a spark hot enough to ignite a combustible gaseous mixture. Such a coil, suitably mounted, is shown in Fig. 27. The two screws with nurled nuts are the terminals of the coil.

INDUCTION COILS

77. Suppose that to a kick coil like the one shown in Fig. 27 is added another coil of insulated wire, wound around the outside of the coil so that the two coils are concentric, the ends of the wire of the outer coil being connected together electrically, metal to metal. Then by connecting the wires of a battery to the terminals of the kick coil an electric current will be induced in and flow through the outer coil during the time that the battery current is gaining its full strength. As soon as the battery current gains its full strength, the current in the outer coil will cease, and there will be no current in it while the battery current continues to flow steadily; but if the battery current is interrupted, current will again be induced in the outer coil during the time that the battery current is dropping to zero value. The current is induced in the outer coil only during the time that the current is changing in strength in the inner coil. Any change in the strength of the current in the inner coil induces a current in the outer coil. *The strength of the induced current is proportional to the rate, or rapidity, of change of current in the inner coil.*

The coil through which the battery current flows is called the **primary coil**; and that in which current is induced, the **secondary coil.** The current in the primary coil is called the **primary current,** and the induced current in the secondary coil, the **secondary current.**

While the primary current is increasing, the induced secondary current flows in a direction opposite to that of the primary current; and while the primary current is decreasing, the secondary current flows in the same direction as the primary current. Thus, as the primary circuit is closed and opened, the secondary current flows first in one direction and then in the other.

78. If the ends of the wires of the secondary coil are separated and left apart, there will be a difference of electric pressure induced between them when the current in the primary coil is either increasing or decreasing. The intensity of this pressure is proportional to the number of turns in the secondary coil, or approximately so. It is also proportional, in a measure, to the number of turns in the primary coil and to the rate of change of the primary current. With a large primary current, the rate of change is more rapid than with a small current when the circuit is closed or opened.

When the secondary coil has a very great number of turns, a battery of even moderate size will supply sufficient current to induce a pressure high enough to cause a spark to jump across the air gap between the ends of the wire of the secondary coil when they are a short distance apart. On account of the great difference between the pressure used to send current through the primary coil and that induced in the secondary coil, the primary is also called the **low-tension coil,** and the secondary, the **high-tension coil.**

79. The primary current can be stopped more abruptly by connecting an electric condenser to opposite sides of the point where the primary circuit is broken. The more abrupt cessation corresponds to a more rapid rate of change in the strength of the primary current, and consequently a higher tension is induced in the secondary coil. There is also less tendency to burn, or fuse, the contact points in the primary circuit when a condenser is attached.

80. An **electric condenser,** such as is used for ignition on automobiles, is made up of a number of sheets of tin-foil and sheets of some insulating material, such as paraffined paper, laid together alternately, so that adjacent sheets of the tin-foil are insulated from each other by the paper. In Fig. 28 the lines *a* and *b* represent the edges of the tin-foil sheets, and the heavy lines *i*, the edges of the sheets of insulating material. All the alternate sheets of tin-foil *a* are connected together by a conductor, and all the remaining tin-foil sheets *b*, by another conductor. These two conductors are generally known as the *sides* of the condenser. The sheets may be curved as well as flat.

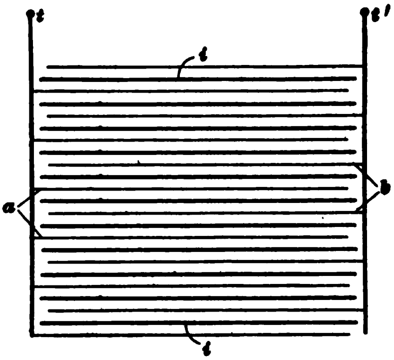

FIG. 28

81. A **transformer,** or **non-vibrator induction-coil**—a coil without any provision in itself for opening and closing the primary circuit—is frequently used in connection with a mechanically driven electric generator to produce a jump spark in a high-tension ignition system. The generator is provided with means of opening and closing the circuit in such a case.

Fig. 29 shows a non-vibrator coil, or transformer, and a condenser connected up with a battery and a switch for closing and breaking the primary circuit. The primary winding or coil *a* is surrounded by the secondary coil *b*, and within it is the magnetic core *c* made up of a bundle of soft-iron wires. The battery *d* is in circuit with the primary coil, and the condenser *f* is connected to the primary circuit on opposite sides of the switch *t*.

When the arm *h* of the switch rotates about *g*, the contact point on it touches the terminal to which the end *i* of the primary wire is attached and closes the primary circuit. Current immediately begins to flow through the primary coil, and the rate of current increase may be rapid enough to induce sufficient tension between the terminals of the secondary coil to make a spark jump between the ends of the wire at *j*. The condenser has no appreciable effect when the circuit is closed and the current increasing, or when the current is flowing steadily, as the condenser is merely short-circuited by the closing of the switch.

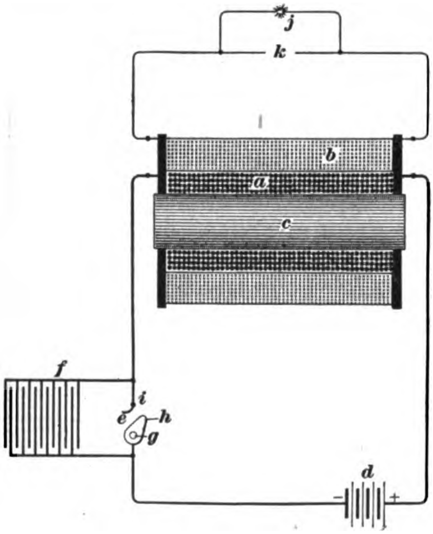

FIG. 29

82. The switch arm, continuing its rotation, next separates from *i* and thus breaks the primary circuit. The self-inductive action of the primary coil tends to keep the primary current flowing after the circuit is broken at *i*. Without the condenser, an appreciable spark, or arc, would be formed at *i*; but with the condenser, the energy that would be expended in forming the arc is diverted into the condenser, and the arc is prevented from forming, or at least from being as intense and from continuing as long as it would without the condenser. Thus, the current is stopped quicker; that is, its rate of decrease from normal value to zero is much greater. Hence, a greater electromotive force is induced in the secondary coil. Furthermore, the energy received by the condenser is given back to the primary circuit, producing a flow of current through the primary circuit in a direction opposite to that in which the battery sends current through it.

This reversed current produced by the discharge of the condenser induces in the secondary coil an electric current that flows in the same direction as the current induced by the decrease of primary current. Thus, the electromotive force induced in the secondary winding is further increased by this action. The difference of potential between the terminals of the secondary coil is therefore greater when the primary current is interrupted than when it begins.

83. The distance between the spark points of the secondary can be so adjusted that, while a spark will jump between them at the instant of breaking the primary circuit, none will jump at the time of closing the primary circuit.

A *safety spark gap* is sometimes provided at *k*, Fig. 29, to prevent possible damage due to an abnormally high pressure in the secondary coil; otherwise, if the gap between the points *j* is very wide, or if an excessive current is sent through the primary coil, breaking down of the insulation might occur. A spark jumps across the safety gap before the pressure becomes higher than the insulation will stand. In automobile practice, the width of the safety gap is about ½ inch.

84. An induction coil that repeatedly opens and closes the primary circuit by its own magnetic action, in conjunction with the elastic action of a spring, is illustrated diagrammatically in Fig. 30. The primary exciting current is supplied by the battery *B*, and the circuit may be traced as follows: From the positive terminal of the battery through wire L_1–binding post P_1–switch *W*–post *E*–screw *K*–contact *D*–flat spring *F*–wire *P*–primary coil *P*–wire *P′*–binding post P_2–wire L_2 to the negative terminal of the battery. On closing the switch *W*, current flows momentarily through this circuit and magnetizes the core *C*, which attracts the piece of soft iron *H* attached to the end of the flat spring *F* and breaks the contact at *D*. The current then ceases to flow, core *C* loses its magnetism, and the reaction of the spring closes the contact at *D*, thus permitting the current to flow again.

These operations are repeated in rapid succession, thus continually changing the magnetism in the core C, and thereby inducing in the secondary coil an alternating electromotive force. The terminals of the secondary coil S, which is wound over the primary coil on the spool O, are connected to binding posts S_1, S_2, to which may be connected the external circuit containing the spark plug.

85. A condenser R consisting of insulated plates a, b has its terminals connected in the usual manner to the opposite sides of the contact points where the primary current is interrupted. The condenser discharge current, which lasts but an instant, passes from a_2 through E–W–P_1–L_1–B–L_2–P_2–P'–coil P–wire P–b_2, thus opposing the direction in which the current was flowing in coil P before the contact at D was opened. This discharge immediately stops the current that was flowing in coil P, and may even start an appreciable current in the opposite direction. The magnetization of the core C is thus reduced almost instantly

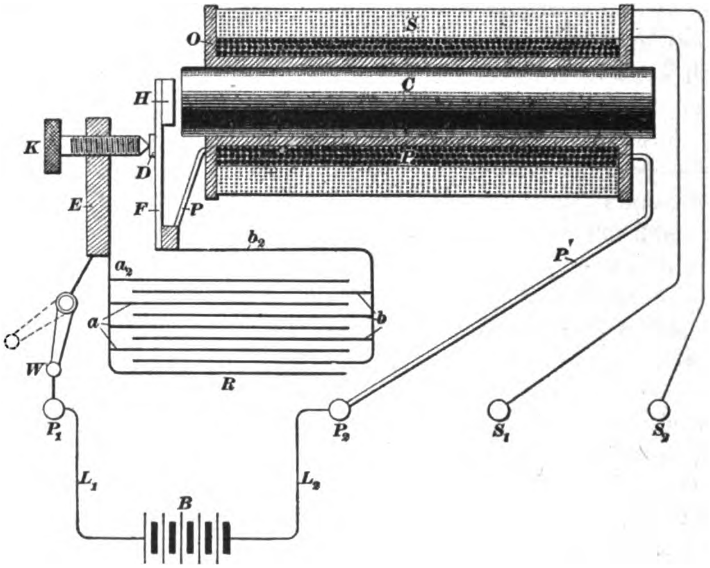

Fig. 30

to zero, and an intense electromotive force is induced in the secondary coil.

A condenser of suitable capacity for the coil with which it is to be used must be selected. If this is done, the spark at the contact maker when it opens the circuit through the primary coil is almost entirely destroyed, and the induced electromotive force is very much increased. When the circuit through the battery and the primary coil is closed by the contact maker, the induced electromotive force in the secondary coil is not large; it is when the contact maker opens the circuit that the greatest effect is produced.

It is immaterial whether the positive or the negative terminal of the battery is connected to the primary terminal P of the coil.

The part $H D F$ is called the *vibrator*, *trembler*, or *current interrupter*. The rate of vibration of the interrupter can be varied by adjusting the screw K.

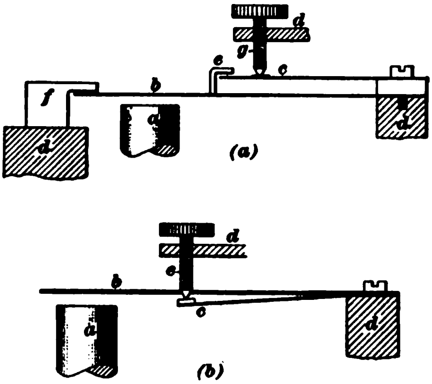

Fig. 31

86. In order to get better contact and a more rapid separation of the contact points at the vibrator of an induction coil, an **impact device** is used on some coils. One form of device is shown in Fig. 31 (*a*), in which *a* shows the magnet pole and *b* the vibrator, which, in this case, is made of a comparatively thin strip of tempered steel. This steel, however, is not hard enough to remain a permanent magnet after magnetization. Instead of having the contact point located on the vibrator proper, a copper strip *c* is rigidly mounted on the frame *d*, and a knock-off piece *e* is attached to the vibrator. When the magnet attracts the vibrator blade, the latter is drawn toward the magnet some distance before the knock-off *e* strikes the end of the contact strip *c* and causes the contact points to separate. On account of the velocity attained by the vibrator before striking the contact strip, the break at the contact points is more rapid than can be secured without the aid of some such impact device. With this particular design of coil a stop *f* is provided to check the upward motion of the vibrator and prevent its unnecessary vibration after the current is broken. The ordinary adjustable contact screw is shown at *g*.

87. Another form of impact-break vibrator involving the principle of operation just described is shown in Fig. 31 (*b*). In this case, however, the contact strip *c* is placed on the side of the vibrator next to the magnet *a*. The vibrator *b* is perforated to allow the point of the adjusting screw *e* to extend through it and press the contact strip *c* away from the vibrator *b* when no current is flowing through the apparatus, the frame of which is shown at *d*. When current flows and the magnet *a* attracts the free end of the vibrator, the latter moves down, gaining some velocity before it strikes the contact strip, and suddenly breaks the circuit.

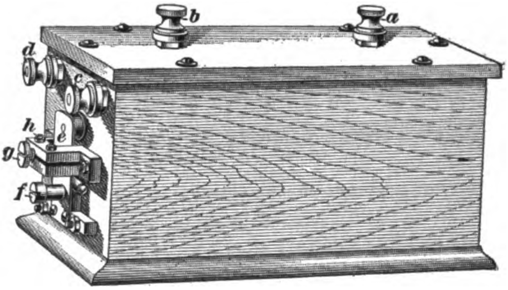

Fig. 32

88. An exterior view of an induction coil with a magnetically operated vibrator and four terminal binding posts is shown in Fig. 32. The binding posts *a* and *b* are the terminals of the secondary coil. At *c* and *d* are shown the terminals of the primary coil; at *e*, the trembler, or vibrator; at *f*, a screw for adjusting the vibrator so as to bring the end carrying the piece of soft iron either nearer to or farther away from the end of the core of the coil; at *g*, the head of the adjustable contact screw whose point, generally platinum-tipped, makes contact with the vibrator; and at *h*, one of two small screws for clamping *g* firmly in its threaded hole through the split yoke that supports it after it has been properly adjusted. The induction coil and the condenser are properly connected together and to the terminals, and are firmly held in place in the box by a mass of paraffin, which is poured in hot and allowed to solidify. One end of the core of the coil is brought through the box just under the trembler.

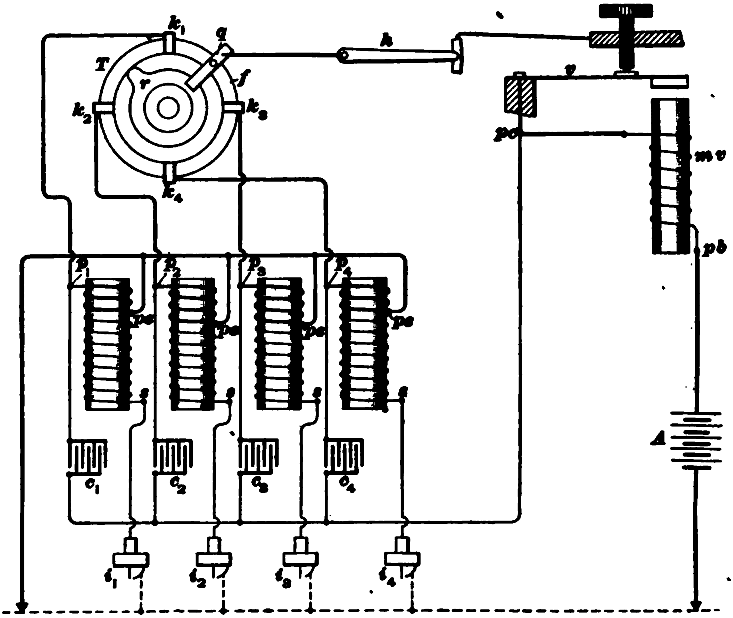

FIG. 33

This four-terminal type of induction coil is not much used on automobiles, because the three-terminal type is more suitable. It is sometimes used for two spark plugs by connecting *a* to the insulated part of one spark plug and *b* to that of the other, the metal of the engine completing the connection between the plugs, which are connected in series by this arrangement. The coil can be converted into a three-terminal type by joining one of the primary terminals to one of the secondary terminals.

89. Master Vibrator.—Instead of providing each coil with a vibrator, sometimes a single vibrating device, called a **master vibrator,** is used for a number of coils. Such an arrangement, in which a master vibrator is provided for use with four coils, is shown in Fig. 33. All four condensers c_1, c_2, c_3, c_4, have one of their terminals connected to the master vibrator at $p\,c$, and each one has its remaining terminal connected to that end of its own coil which is wired to one of the contacts of the timer T. Thus, both the master vibrator contact and one timer contact have a condenser connected around them. The path of the discharge current from condenser c_1 may be traced from the lower side of the condenser through terminal $p\,c$, winding of the master vibrator coil $m\,v$, battery connection $p\,b$, battery A, frame of car and engine, common connecting wire to the terminal $p\,s$ of the left-hand, or No. 1, coil, through the primary winding included between $p\,s$ and p_1, back to the condenser. The discharge circuit of any other condenser can be traced in a similar manner.

The master coil has a single winding, and is therefore smaller than the double-wound induction coil and is comparatively inexpensive. It resembles a kick coil to which a vibrator v is added. The timer in this case has its rotor r insulated from the other parts of the apparatus. The current from the battery passes through the master vibrator and switch h to the rubbing contact piece of metal q, which is fastened to an insulated part f of the timer, then through the rubbing contact between the piece q to the metallic portion r of the rotor, from which it passes successively through each contact piece k_1, k_2, k_3, and k_4 to each primary coil, then to the engine frame, and back to the battery. Current from the secondary winding of each coil passes from s to the insulated electrode of the corresponding spark plug i_1, across the air gap to the uninsulated electrode and thence through the engine to the primary-secondary terminal *p s*.

If it is not considered necessary to protect the points in the timer by condensers in parallel with them, the four condensers of the similar coils can be replaced by a single condenser connected around the contact points of the vibrator on the master coil.

ELECTRIC IGNITION
(PART 2)

CURRENT-DISTRIBUTING DEVICES

SPARKING APPLIANCES

IGNITERS

1. The sparking device employed with what is variously known as the *touch-spark*, *wipe-spark*, *contact-spark*, *low-tension*, or *make-and-break system of ignition*, is commonly called an **igniter**, which name distinguishes it from the sparking devices used with the *jump-spark*, or *high-tension*, *system of ignition.*

2. One form of **low-tension contact igniter** is shown in Fig. 1. The stationary electrode *a* is insulated from the metal body of the igniter by two pieces of steatite (soapstone). These are bored for the electrode to pass through and are coned outside to fit in the hole, which, as shown, is much larger than the electrode and tapers at the ends to suit the insulating plugs. The rocker spindle *b* carries the contact finger *c*, which is inside the combustion chamber and is connected by the rocker spindle to the external arm *d*. This arm pro-

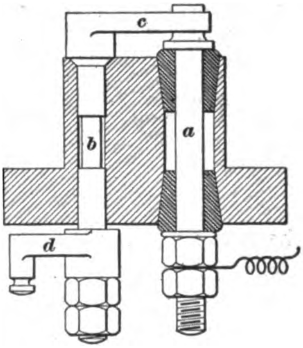

FIG. 1

vides a means for rocking the rigidly connected parts *b*, *c*, and *d*.

3. The principle of operation, as well as the general features of the mechanism for actuating this and similar igniters, is shown in Fig. 2, view (*a*) being a front elevation and view (*b*) a side elevation. At *a* is shown a shaft turning at one-half the speed of the engine; or, if the engine is of the two-cycle type, it turns at the same speed, and may, in fact, be the engine crank-shaft itself. On this shaft is a cam *b*, frequently called a *snap cam*, that bears against a roller *c*, held in contact with the cam by the spring *d* on the tappet rod *e*. The lower end of this rod, or plunger, is threaded, so that by adjusting the nuts at *f*, and thus increasing or decreasing the distance that the foot of the rod extends into the socket *g*, the length of the rod and, consequently, the width of the gap when the igniter points separate, can be varied at will. When the roller *c* is in its lowest position, the ball on the upper end of the tappet rod *e* rests in a socket in the lever arm *h* (corresponding to *d*, Fig. 1). This arm is secured to a rocking stem (as *b*, Fig. 1) that passes through the wall of the combustion chamber, as shown by the dotted lines of the side elevation in Fig. 2 (*a*). The inner end, which has a ground joint to

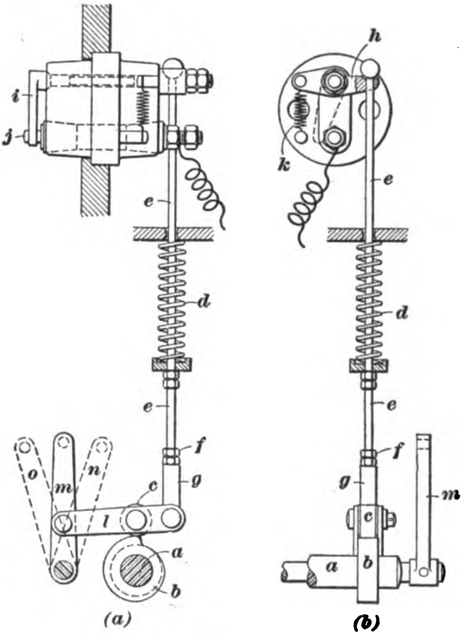

(a) (b)

FIG. 2

prevent the gases from blowing past it, is prolonged to the finger *i*. This finger makes contact with an insulated stem *j*, to whose outer end one of the wires of the electric circuit is attached. The light spring *k* holds the finger *i* against the stem *j*, except when the two are separated by the pull of the head of the tappet rod *e* in the socket of the arm *h*. Because the greater tension of the spring *d* overcomes that of the spring *k*, the contact points are normally out of contact except when the tappet rod is pushed up by the cam. The adjustment of the tappet rod is such that after contact has been made it leaves the socket of the arm *h* and continues its upward motion a short distance, so that, when the roller *c* drops off from the cam, the head of the tappet rod strikes the arm *h* a smart blow, thereby causing an abrupt separation of the contact points.

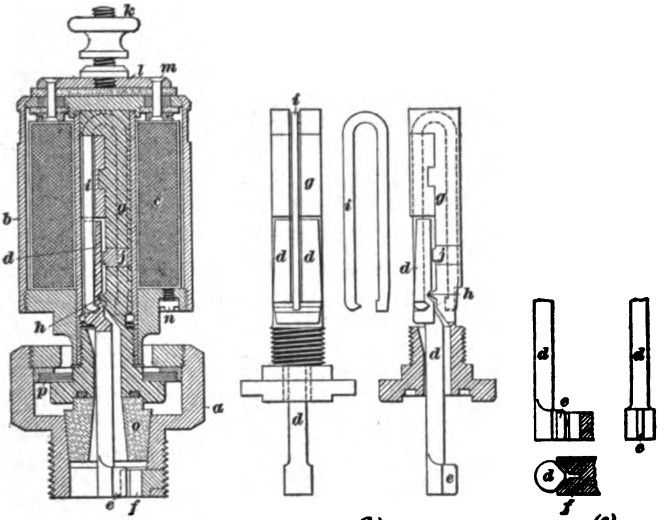

(a) (b) (c)

FIG. 3

As shown, the roller *c* is mounted in a rocker-arm *l*, one end of which is pin-connected to a second rocker-arm *m*, which is operated by hand to control the time of ignition. When the arm *m* is moved toward the right, as indicated by the dotted outline *n*, the ignition is earlier than when it is in the position *m*; when *m* is moved toward the left, to the other dotted position *o*, the ignition is made later.

4. A **make-and-break igniter** designed to be operated on current from a battery or a low-tension magneto, is illustrated in Fig. 3. Fig. 3 (*a*) shows a longitudinal section of the device, and Fig. 3 (*b*) shows details of the interrupter lever and magnetic core of the coil. The hexagon-headed plug *a* is screwed into the engine cylinder in the same manner as with a high-tension spark plug. The body *b* of the plug contains a spool-wound magnet coil *c* and the upper end of the interrupter lever *d*. The igniting current passes through the magnet coil, and acts to move the interrupter lever so as to break the circuit and form the spark at the contact points of the igniter.

The interrupter lever *d* extends down into the part *a*, and has at its lower end a contact point *e* that makes contact with the stationary part *f*. The latter is part of *a* and is therefore grounded, being electrically connected to the engine. The magnet core *g* carries a knife edge at *h*, on which the interrupter lever *d* rocks. A **U**-shaped spring *i* presses the inner parts of its ends against both the core and the interrupter lever, so as to keep the contact points *e* and *f* together, except at the instant they are separated to form the spark. The core *g* has a brass piece *j* inserted in it.

5. The electric circuit through the apparatus is from the terminal *k* through the conducting plate *l*, rivet *m*, to the terminal of the coil *c*, through the coil to its other terminal *n*, which is in electric connection with the magnet core. From the magnet core the current flows to and through the interrupter lever *d* to the contact point *e* and thence to *f* and the body of the engine.

When the timer closes the circuit, the current magnetizes the core *g* and a magnet pole is thus formed in the region of the brass insert *j*. This pole attracts and draws toward it the upper end of the interrupter lever *d*, thus rocking the lever on its knife-edge support and moving the contact point *e* away from *f*. This breaks the electric circuit and causes a spark at the contact points. The magnet loses its magnetism immediately after the circuit is broken, and the contact points are again pressed together by the **U**-shaped spring. They are then ready for the next closing of the circuit by the timer to form a spark for the next explosion.

The contact piece *f*, as shown in Fig. 3 (*c*) has a **V**-shaped groove into which the contact *e* enters with a slight wedging action. The interrupter lever is allowed a small amount of side play, so that in case one side of the **V** of the contact piece is fouled and does not make electric contact, there is still the other side remaining with which suitable contact may be made.

The body *a* is insulated from *e* by the steatite cone *o* and mica plates *p*. The makers of the plug recommend that the part of the engine into which it is screwed be well cooled by water.

SPARK PLUGS

6. The almost universal form of **spark plug** for jump-spark, or high-tension, ignition consists of a small central wire or rod that passes through some kind of insulating material. The insulation is in turn surrounded by a threaded piece of metal or bushing that screws into a threaded hole in the engine cylinder. The central wire, or rod, is thus insulated from the external bushing, within a short distance ot which the central wire terminates. The space left between the wire and outer metal bushing is the *gap* across which the spark jumps. Being in contact with the metal of the engine, the outer bushing of the plug forms part of the frame-connected side of the high-tension circuit. Only the central wire of the plug is insulated from the engine.

In some of the forms of high-tension spark plugs not extensively used, the electrodes on both sides of the spark gap are insulated from the engine, and in this way double insulation is provided between the electrodes and terminals of the wires leading to the plug. Two connecting wires are necessary for each plug when double insulation is thus used.

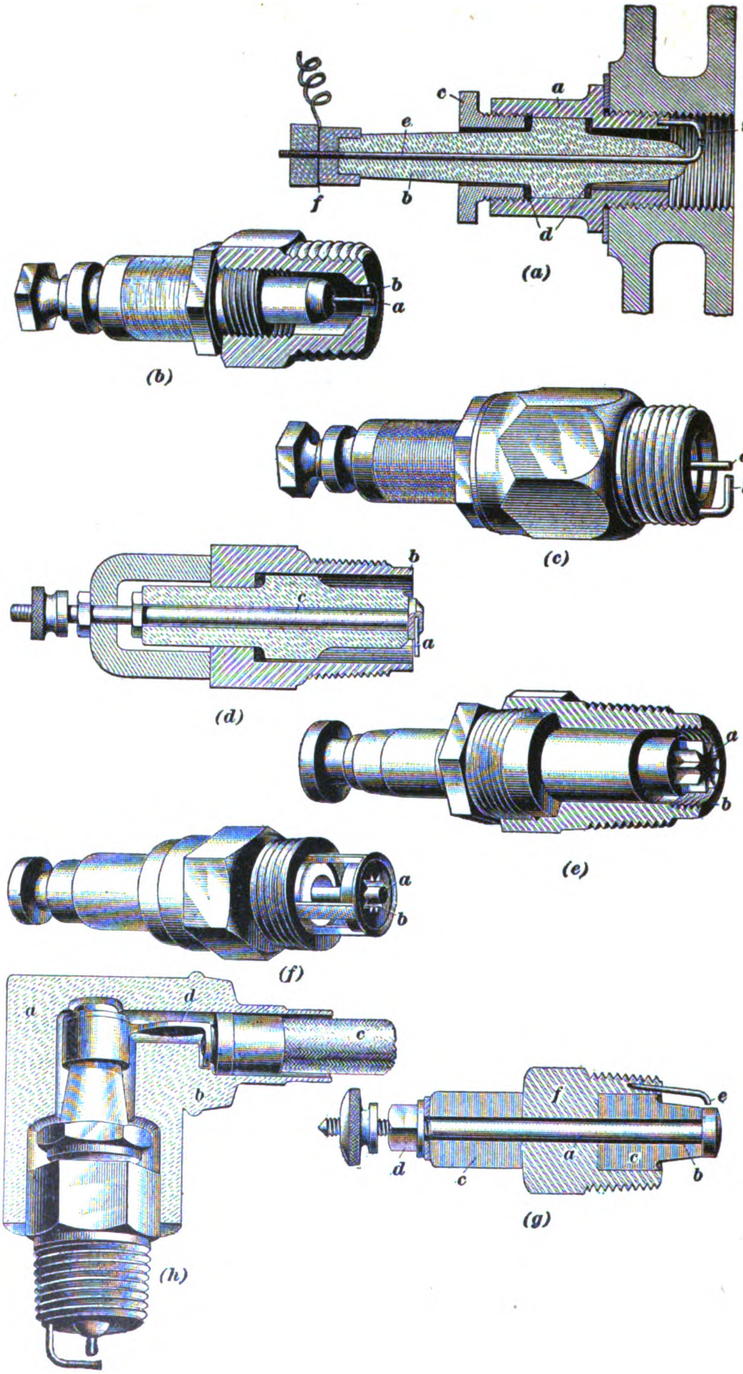

FIG. 4

7. The width of the spark gap is generally about $\frac{1}{32}$ inch for spark plugs used in connection with induction coils provided with magnetically operated vibrators. In one or two very unusual cases, the makers of such vibrator coils recommend that the spark gap be as wide as $\frac{3}{32}$ inch when the batteries supplying current to the induction coil are new and of full strength.

For use in connection with magneto-electric generators and non-vibrator coils, or transformers, it is generally recommended by the makers of such apparatus that the width of the spark gap be from $\frac{1}{64}$ to $\frac{1}{50}$ inch; these values correspond approximately to .4 and .5 millimeter.

8. The material used for insulating the parts of the spark plug from each other is usually either porcelain, mica, or steatite. The threaded bushing is ordinarily made of steel, brass, or bronze and the central wire of steel. The inner end of this central wire is quite frequently terminated with a piece of platinum wire.

As found on the market, the sizes of the threaded bushing vary considerably. Many plugs are of the size that corresponds to $\frac{1}{2}$-inch gas pipe; the outer diameter for $\frac{1}{2}$-inch gas pipe is approximately $\frac{7}{8}$ inch. The gas-pipe thread is tapered, and for this reason no shoulder is required to make a gas-tight joint between the plug and engine. In other plugs, the thread is of uniform diameter, and a shoulder and copper washer are provided, as shown in Fig. 4 (*a*), for making the joint gas-tight. The thread is similar to that on a machine bolt or screw. These plugs are about the same size as those with the $\frac{1}{2}$-inch gas-pipe thread. Quite a number of plugs in millimeter sizes are used; some are larger and some are smaller than the $\frac{1}{2}$-inch gas-pipe thread already mentioned.

9. Fig. 4 shows a number of spark plugs for jump-spark ignition. In (*a*), the steel bushing *a* is the part that screws into the threaded hole in the engine cylinder. At *b* is shown the porcelain insulator; at *c*, a threaded bushing for clamping the porcelain and packing into place; at *d*, a packing ring of copper, asbestos, or some other suitable material; at *e*, the central insulated wire, or electrode; and at *f*, a binding-screw terminal for connecting the external wire. The spark gap is between the curved end of the central insulated wire *e* and the grounded wire *g* projecting from the bushing *a*.

The construction of the plugs shown in (*b*), (*c*), (*d*), (*e*), and (*f*) is but little different from that shown in (*a*). What is known as a *closed-end plug* is shown in (*b*), the points *a* and *b* being located in the nearly closed end of the plug. The point *a* is concentric with the plug-end opening into which the point *b* projects from one side. The so-called *open type* of the same plug is shown in (*c*), the point *a* projecting beyond the end of the plug, as shown. The point *b* can be turned away from *a* to increase the gap between the points. In the plug shown in (*d*), the point *a* is mounted in the hexagonal head *b* of the insulated bolt *c* for conducting the current and for keeping the plug tight, the spark bridging the gap between the point *a* and the threaded shank of the plug. In the plug shown in (*e*), the insulated electrode *a* resembles a star. The spark occurs between the projections of the insulated electrode *a* and the threads of the grounded electrode *b*. In the plug shown in (*f*), the insulated electrode *a* is threaded and the opening *b* of the grounded electrode is star-shaped. In the plug shown in (*g*), the insulated electrode *a* is wrapped with sheet mica *b*, and then surrounded with mica washers *c* pressed closely together under heavy pressure and held in place by a brass nut *d* and washer. The grounded electrode *e* is fastened in the bushing *f*. Spark plugs are sometimes protected against the short-circuiting effect of moisture by means of a porcelain hood, or cap, *a*, Fig. 4 (*h*). This cap has a recessed neck *b* on one side to receive the wire *c*, which is connected to the plug by a terminal link *d* in the manner shown.

AUXILIARY SPARK GAP

10. A spark plug whose insulation has become somewhat defective can sometimes be made to perform its service by connecting in series with the gap at the spark plug a device known as an **auxiliary spark gap,** two forms of which are shown in Fig. 5. This device consists simply of two insulated terminals *a* and *b*, with points separated by an adjustable gap, usually about $\frac{1}{16}$ inch in length. In the form shown in (*a*), the terminals are enclosed in a glass tube *c* to prevent possible ignition of stray gasoline vapor. This form is connected in the secondary circuit by means of the connecting screws *d* and *e*. The form shown in (*b*) is attached to the binding post of the spark plug itself, and the spark jumps from the point *a* to the binding post *b*. The base *f* is made of fiber.

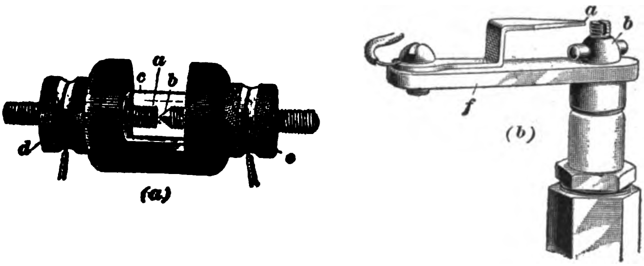

FIG. 5

When the primary circuit is broken by the timer, it requires a short time for the induced current in the secondary circuit to build up to its full voltage; and, in order that the full voltage may be reached, it is necessary that the first small quantity of energy induced in the secondary shall not be allowed to escape. If the spark-plug insulation is not perfect, or if the plug is sooted, the charge first induced leaks away either through the insulation or over the soot deposit, and the voltage does not become great enough to force the current across the gap and produce a spark. By the use of an auxiliary spark gap outside the cylinder, the secondary circuit is held open, this leakage is prevented, and the induced current builds up to its proper voltage. Thus, when the gap is finally bridged, the entire energy of the induced charge is employed in producing the spark.

TIMERS

11. **Timers,** or **primary commutators,** as they are commonly called, are devices for closing the ignition circuit at some prearranged point or points in the revolution of the crank-shaft, keeping it closed sufficiently long to insure ignition, and then opening it, no matter whether the engine is of the single or of the multicylinder type. The principle of operation of all timers is practically the same, but the length of the time of contact varies, and in some cases the time of contact is so prolonged that an extremely short life of the battery is the result.

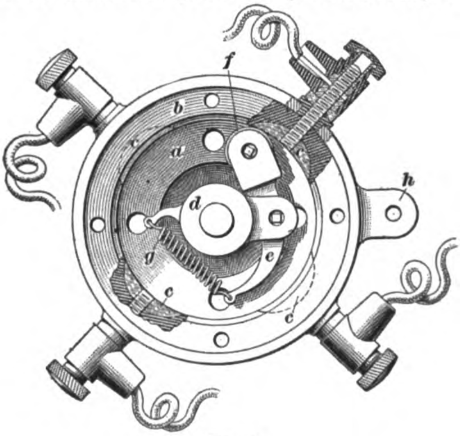

Fig. 6

Almost innumerable forms of timers are in use. One of the features of chief importance is the method of making contact between the rotor and the stationary member. Sliding contact is used to a considerable extent, and steel balls are also used for contact. In most cases the rotor is electrically connected to the driving shaft, but in some designs it is insulated from the machinery and frame of the car.

The most essential requirement to be met by a timer is that, for a given setting, it shall always close the primary circuit at the same instant relative to the movement of the engine piston. This is called *synchronous operation*. Many timers fail in this respect after some service, the failure generally being due to worn or loose parts that can move to some extent without restraint. With the timer illustrated in Fig. 6 such failure is not likely to occur in case of wearing at the roller and pin that holds it, because the spring attached to the arm always keeps these parts pressed together. Parts, such as a roller and its pin, that are not pressed together in this manner are liable to give trouble when wear occurs. Also, wear between the stationary parts and the shaft of the timer may cause some irregularity in the time of ignition.

12. The timer shown partly in section in Fig. 6 closes a primary electric circuit at each instant that a spark is to be produced in the engine. The casing, or housing, of this timer consists of a large wood-fiber disk *a*, with a thick raised rim *b*, in which are embedded four brass contact pieces *c*, each of which is provided with a terminal for connecting to its proper spark coil. The shaft that supports the timer runs through the disk *a*, which has a bearing on the shaft and carries a hub *d*, to which is pivoted a lever *e*. One end of the lever *e* carries a roller *f* that runs against an internal ring *b* and makes contact with the insulated segments *c*. A spring *g* connected to the other end of the lever *e* insures good contact. An arm *h* projecting from the body of the timer is provided for making connection to a system of links. These links prevent the rotation of the disk *a*, and at the same time afford a means of changing the instant of ignition through movement of the hand-operated spark control lever at the steering wheel, not shown. A cap is provided for covering the parts of the timer and protecting them from dust. This cap also affords a means of retaining oil or grease for lubrication.

DISTRIBUTORS

13. Distributors, or secondary commutators, are devices used with the jump-spark system of ignition for delivering the high-tension, or secondary, current generated in a single induction coil to all the spark plugs, the use of a separate coil for each plug thus being obviated. Except for the rotor of the timer *T*, as shown in Fig. 7, the primary, or low-tension, circuit is identical with that for a single spark plug. For a four-cylinder engine, instead of four contact points, as in the ordinary timer, the timer rotor *r* has as many contact points as there are spark plugs, so that the primary circuit is closed at the single insulated contact piece *k* of the timer as many times per revolution of the timer as there are spark plugs.

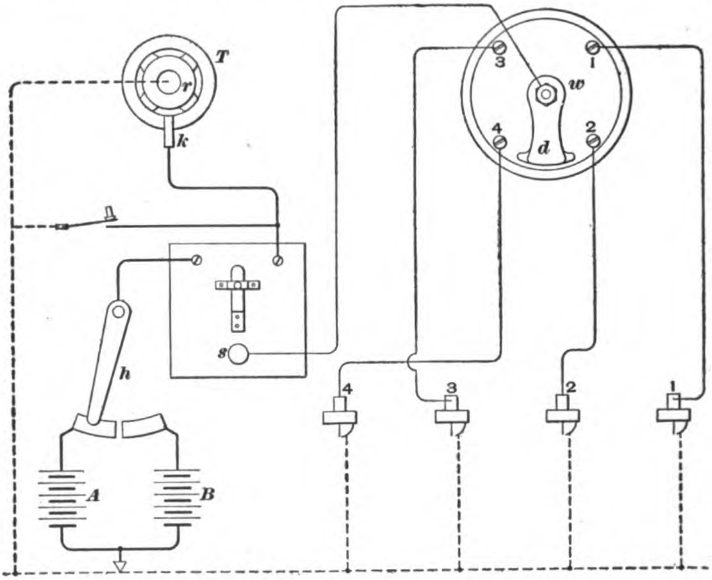

FIG. 7

The high-tension terminal of the spark coil *s* is electrically connected to the rotary arm *d* of the distributor. This distributor arm revolves about the axis *w*, and is insulated from all other parts of the apparatus and of the automobile. The spark plugs are connected to stationary insulated terminals *1*, *2*, *3*, *4* of the distributor. As the distributor arm turns about its axis, its broadened end passes successively over these terminals, either making metallic contact with them or coming very close to them. The rotor *r* of the timer and the arm *d* of the distributor rotate at the same speed, so that when the timer closes the primary circuit, the end of the distributor arm is over one of the terminals *1*, *2*, *3*, *4*. The high-tension current passes between the distributor arm and the terminal that it is over, and is thus directed to the corresponding spark plug. Through the rotation of the distributor arm, the current is distributed successively to the spark plugs of a four-cylinder engine in either the order *1*, *2*, *4*, *3* or *3*, *4*, *2*, *1*, according to the direction of rotation of the arm.

Since the current passing between the distributor arm and the stationary terminals has sufficient tension to jump the gap at the spark plug, it will also jump a small gap between the distributor arm and terminal in case they do not touch each other. In fact, a small air gap here is sometimes considered an advantage for the reasons given in connection with the description of auxiliary spark gap devices in Art. **10.**

The timer rotor *r* and the distributor arm *d* are generally mounted on the same spindle, or shaft, but they are thoroughly insulated from each other. If they are mounted on separate shafts, the timer rotor may have only two contact points and may rotate twice as fast as the distributor arm; or, it may have only one contact point and may rotate four times as fast as the distributor arm. The free end of the distributor arm is broadened circumferentially, in order that some part of it will always be over one of the corresponding terminals when the timer closes the primary circuit, although the contact piece *k* of the timer is rocked through a considerable arc (45° or so) to vary the time of ignition.

14. Spark coils of both the transformer, or non-vibrator, type and the vibrator type, are used in conjunction with a distributor. When the vibrator type of coil is used, the work for the contact points at the vibrator, is somewhat arduous, because the single vibrator must perform as much work as the four vibrators in an individual spark-coil system for four spark plugs. Under this condition, the vibrator contacts are much more liable to become burned and fused than when the work is divided among the four vibrators of the individual-coil system.

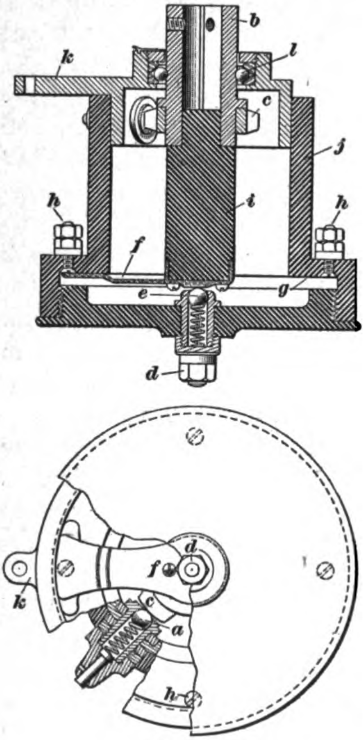

Fig. 8

If the coil fails to operate because of this or any other reason, ignition current is cut off simultaneously from all the spark plugs, and, unless provided with more than one ignition system, the engine under ordinary conditions will stop immediately. The possibility of this occurrence is recognized by the makers of such ignition devices, and a spare coil is often provided in the box enclosing this part of the ignition apparatus.

In a vibrator coil used in this manner, the condenser can be connected in parallel with only the vibrator contact points. The timer contacts are thus left without the protection of a condenser, but this is common practice for battery currents.

15. Commonly, the distributor is mounted on the same shaft as the timer. Fig. 8 shows this arrangement in section and elevation. The primary contact is made by a steel ball *a*, held in place by a spring, as shown. The sleeve *b* and contact cam *c* are carried on a shaft turning at one-half the speed of the crank-shaft of a four-cycle engine. The cam has four lobes for a four-cylinder engine of this class. The secondary current is led to the binding post *d*, through which it travels, by way of the contact ball *e*, to the brass strip *f* that runs over the hard-rubber surface *g*, and makes contact with the flat-headed screws *h* embedded therein. These screws carry the current to the several spark plugs.

Efficient insulation between the primary and the secondary is secured by the long, hard-rubber stem *i* on which the brass strip *f* is carried. The casting *j* is rotated by the arm *k* to advance or retard the spark. It is evident that a rocking movement of this arm either advances or retards both primary and secondary contacts alike. A ball bearing *l* is shown between the spindle and the part *c*.

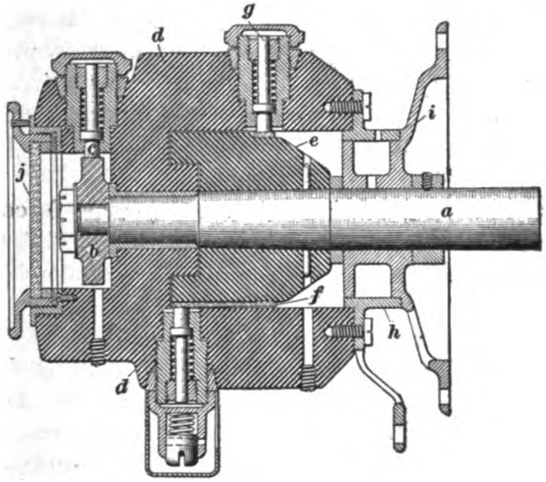

FIG. 9

16. In the **combined timer and distributor** shown in Fig. 9, the shaft *a* carries at its extreme end the timer cam *b*, which has as many lobes as there are spark plugs to be supplied. These lobes successively make contact with the steel plunger *c*. This plunger is supported in a hard-rubber casing *d*, and by means of a sleeve is fastened on *a* for rocking according to the spark advance required. Attached to *a* by a taper pin is a hard-rubber barrel *e*, carrying a contact ring *f* extending clear around it and connected through a longitudinal strip with a single contact segment near the left-hand end of *e*. The secondary current is carried to the ring *f* by the contact plunger *g*, and four other plungers mounted in *d* make contact successively with the segment connected with *f*. The hard-rubber mounting affords efficient insulation. To the right-hand end of *d* is screwed a metal ring *h*, from which projects an arm for rocking *d* to advance or retard the spark. The light casting *i* affords a bearing for the shaft and for the ring *h*, and can be screwed to any convenient support, the shaft *a* being operated by a chain or flexible shaft driven from the cam-shaft. A glass front *j*, through which the action of the timing cam may be watched, is provided.

17. **Atwater-Kent Spark Generator.**—A combined primary, or low-tension, timer and secondary, or high-tension, distributor, the design of which differs considerably from that of ordinary types, forms the principal part of the apparatus shown in Fig. 10, which is known as an **Atwater-Kent spark generator.** Besides the combined timer and distributor, this device includes a coil of the transformer, or non-vibrator, type and a condenser. The whole mechanism is enclosed in a box, or case, *a*, so as to form a single unit that is bolted to the dash. On the bottom of the box, at the right, are two binding-post terminals, to which are attached the wires from the zinc and carbon terminals of a dry-cell battery The negative, or zinc-plate, terminal wire is connected

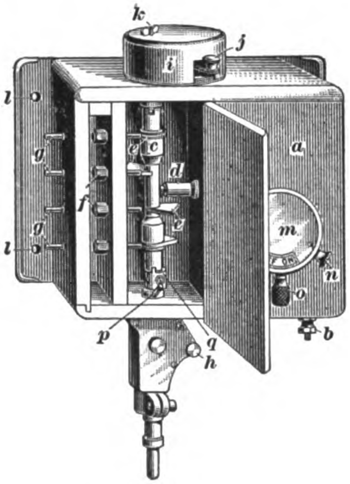

FIG. 10

to the binding post nearest the dash, and the wire from the carbon-plate terminal is attached to the binding post shown at *b*. The secondary is grounded within the device, and for this reason no ground wire is necessary.

The timer, or primary contact maker, the distributor, and the spark-advancing device are carried by a single vertical shaft *c* in the left-hand side of the box. This shaft is driven from the cam-shaft, timer shaft, or other rotating part of the engine by means of gears and shaft with universal joints. With four-cycle engines, this shaft rotates at the same speed as the cam-shaft, but with two-cycle engines, it is driven at the same speed as the crank-shaft.

18. When the primary circuit is broken by the contact maker, the induced secondary current passes from the coil in the right-hand side of the box to the distributor shaft *c* through a brush in the brush holder *d*, the brush being held in contact with the shaft by means of a spring. From the shaft *c*, the secondary current is delivered by some one of the four brass distributor blades *e* to some one of the four secondary terminals and connected binding posts *f*, to which are attached the wires leading to the spark plugs. These wires are carried through holes in the dash and the back of the box. The distributor blades *e*, which do not touch the terminals, are insulated from the rest of the shaft, and the secondary terminals to which the binding posts *f* are attached are also insulated. Opposite each of the secondary terminal binding posts is a spring-actuated button *g*. This button, when pressed inwards, grounds the spark for the corresponding cylinder of the engine, the plugs of which may thus be tested. When trouble from skipping is experienced, the cylinder that misses may be easily located by alternately depressing the four cut-out buttons; the one whose depression does not affect the firing of the other cylinders corresponds to the cylinder that misses.

The spark plug of the first cylinder, in which the charge is to be exploded, is connected to the terminal opposite the upper distributor blade, the plug of the second cylinder is connected to the terminal of the distributor blade that next comes to its terminal, and so on. The spark is advanced or retarded by means of a spiral sleeve actuated by the shaft *h*, so as to turn the upper part of the shaft *c*, where the contact device, or timer, within the case *i* is attached. For starting the engine "on the spark," the contact maker is provided with a starting lever that has a button *j*. This button, when pressed, makes contact, and when released, produces a spark in the cylinder that happens to be in communication with the distributor. The contact should be made and broken by a tapping motion of the fingers on the button *j*. The cover over the contact maker is held in place by a wing nut *k*, while the generator box is fastened to the dash by means of bolts passing through holes *l*, of which there are two on each side. The battery switch *m* is mounted

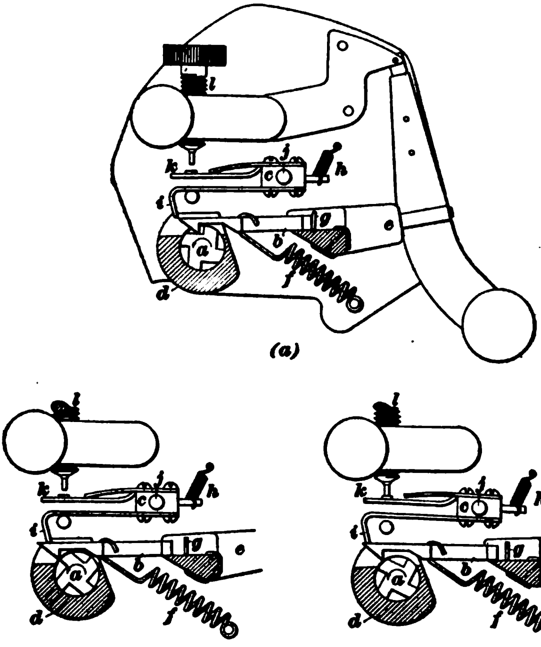

(b) (c)

FIG. 11

on the front of the box, as shown, the removable switch plug *n* being located to the right of the switch lever *o*. An oil tube *p* provides for lubrication, while the clamping collar *q* provides a means of setting the time of the spark.

19. A plan view of the mechanism of the primary contact maker, or timer, of the Atwater-Kent apparatus is shown in Fig. 11 (*a*), different positions of the working parts being shown in (*b*) and (*c*). There are three moving parts, namely, the shaft *a*, the snapper *b*, and the pivoted contact arm *c*. In the end of the shaft *a*, which is the upper end of the shaft *c*, Fig. 10, are four notches that form a ratchet. This ratchet engages the claw at the end of the snapper *b*, which is a light piece of tempered steel that is guided in its movement by slots in the bronze base *d e* and is pulled by the spring *f* against a spring-wire stop *g* when released from the notches on the shaft. The contact arm *c* is normally held in the position shown in Fig. 11 (*a*) by the spring *h*. The shaft *a*, turning counter-clockwise, draws the snapper *b* into the position shown in (*b*), the claw of the snapper riding up out of the notch of the ratchet on to the rounded part of the shaft, as shown in (*c*). In this way, it acts as a wedge between the shaft and the steel hook *i* of the contact arm, which is pivoted at *j*, and brings a platinum point in the flat copper spring *k* into contact with the insulated stationary contact screw *l*, thus closing the primary circuit. Under the pull of the spring *f*, the snapper claw is then quickly snapped into the next notch of the shaft, releasing the hook *i* and thereby suddenly breaking the contact at the platinum points on *k* and *l*. The snapper and contact arm thus come to rest in their normal positions, as shown in Fig. 11 (*a*).

With the engagement of the snapper claw by the next tooth of the ratchet, the process of making and breaking the circuit is repeated, the period of contact being the time required for the snapper *b* to slide past the hook *i*. The duration of contact, which is always brief, may be varied by turning the contact screw *l*. No spark is produced in turning the shaft *a* in a direction opposite to its normal, or counter-clockwise, rotation, because the snapper will clear the hook of the contact arm when the shaft is given a clockwise rotation. This non-reverse feature is of value with two-cycle engines, which will start backward "on the spark" as readily as forward when an ordinary timer is used. There is nothing about the device that requires adjustment, except the contact screw *l*, a close setting of which prolongs the duration of contact, because the contact is sooner established on return of the snapper. Adjustment of the contact screw permits of a light contact with a fresh battery, while with the maximum length of contact, cells that would ordinarily be considered depleted may be utilized, because there is no waste of energy in the production of more than one spark, which is all that is needed to ignite a combustible mixture. In the ordinary service, after adjustment for use with a fresh battery, the contact points should be brought nearer together by giving the contact screw *l* a quarter or a half turn every 500 miles.

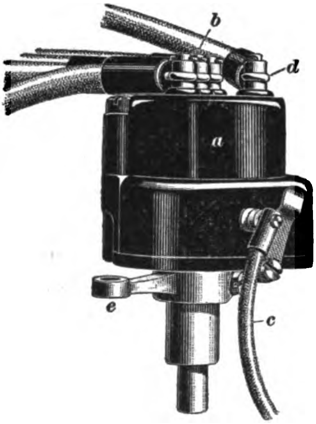

FIG. 12

20. In Fig. 12 is shown a more compact form of the primary contact maker and the distributor elements of the apparatus shown in Fig. 10. In this case, the non-vibrator coil, condenser, and switch are arranged in a separate unit attached to the dash. This device is adapted for use on cars where it is inconvenient to install the spark generator, and takes the place of an ordinary timer on any convenient half-time shaft. The hard-rubber distributor casing *a* carries four posts *b*, to which the spark-plug cables are attached. Two primary wires are run in the cable *c*, from the coil to the contact maker, and a central post *d* receives the high-tension current from the coil and transmits it to the distributor blade. This blade is fastened to a hard-rubber block removably mounted on the contact-maker shaft. For advancing and retarding the spark, the body of the contact maker is actuated by the lever *e* in the usual way.

SWITCHES

21. Small **hand switches,** such as are used on automobiles in the primary circuit for two batteries, are shown in Fig. 13. In the switch shown at (*a*), the positive terminals of the two batteries are attached at the back to the contact points *a* and *b*, respectively, so that, when the switch arm *c* is in contact with either contact point, current will flow through the switch arm *c* and plug *d*, shown in full in the side view (*b*), to the spark coil, and from thence to the timer and through the grounded timer shaft back to the battery. The switch arm, or lever, *c*, Fig. 13 (*c*), is removable, and is shown separated from the base of the switch, Fig. 13 (*d*), to which it belongs. When put into use, the pin, or plug *d* is inserted in the round hole shown just back of the base plate. When the pin is thus inserted, the wedge-shaped contact point on the switch arm *c* can be brought against either the contact piece *a* or the contact piece *b* or between the two at the space marked *e*. The part with which

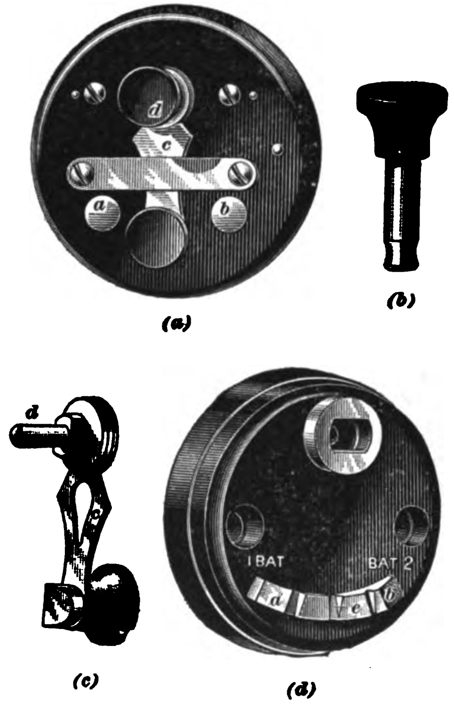

(a) (b) (c) (d)

FIG. 13

the plug *d* is in contact is generally connected to the wire leading to the induction coil. One battery wire can be connected to *a*, and the other to *b*. Either battery can then be put into service by bringing the lever *c*, Fig. 13 (*c*), over the switch terminal belonging to that battery. By putting the contact piece of *c* in the space *e* between *a* and *b*, so that the sides of the wedge press against both of these parts, the batteries will be in parallel. A small notch near the middle of each of the contact pieces serves to hold the lever in position when the knife edge bears in the notch.

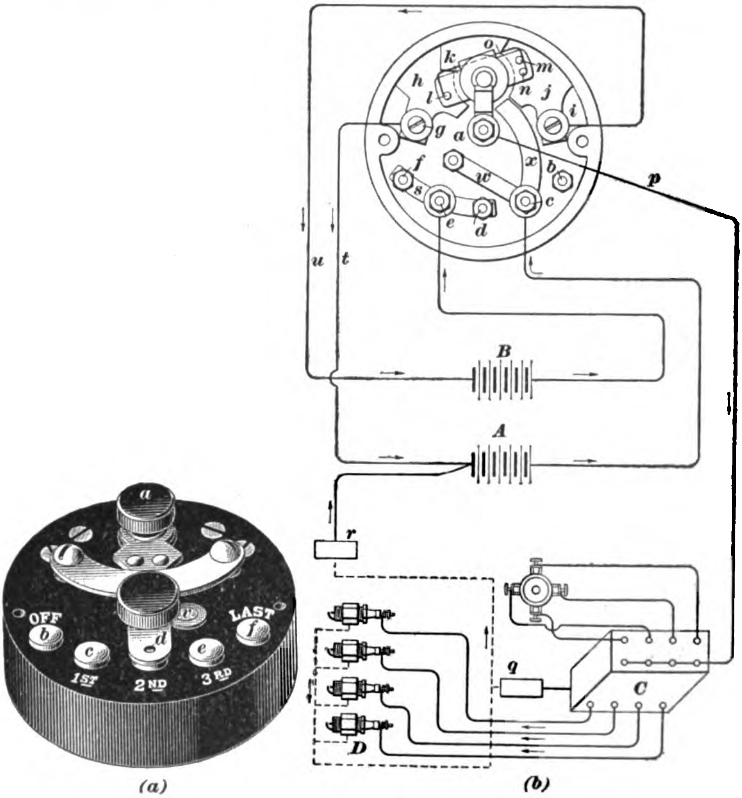

(*a*) (*b*)

Fig. 14

22. A **two-battery switch** having five positions for its lever arm, including the off-position, is shown in Fig. 14. The four working positions correspond to: (1) battery *A* in circuit alone; (2) battery *B* in circuit alone; (3) batteries *A* and *B* in parallel; and (4) batteries *A* and *B* in series.

A plug *a* fits into the hollow pivot of the switch arm. The withdrawal of this plug breaks the electric circuit, so that the switch becomes inoperative. In (*b*) is shown the switch connections for an individual-coil, high-tension ignition system. The switch is generally placed near the spark coil *C* from which the secondary wires are carried to the spark plugs *D*. A wire is led from the binding screw *a* to one primary terminal of each spark coil. In this case there are four coil terminals. When the switch arm is on contact button *b*, the circuit is open; when on *c*, battery *A* only is cut in; when on *d*, battery *B* only is in circuit; when on *e*, the batteries are operating in parallel; and when on *f*, the batteries are in series.

The connections, in addition to those already given, are as follows: From the carbon plate of the right-hand end cell of battery *A*, a wire is carried to the binding screw *c*, the wire from the carbon plate of the right-hand end cell of battery *B* being carried to the binding screw *e*, under which is a link, or contact strip, *s* connecting with the contact points *d* and *f*. Thus far, the same letters of reference apply to similar parts in (*a*) and (*b*). A wire from the zinc of battery *A* is connected to the binding screw *g* attached to the metal plate *h*, and a wire from the zinc of battery *B* is connected to the binding screw *i* attached to the metal plate *j*. In a fiber plate *k* fixed on the post *a*, Fig. 14 (*a*), so as to turn with it when the switch arm is shifted, are mounted three contact pins *l*, *m*, and *n*, Fig. 14 (*b*), that slide on the metal plates *h* and *j*. These pins are electrically connected by means of a wire *o* laid in a slot in the fiber plate *k* and soldered to the pins.

23. When the end of the switch arm rests on the contact point *c*, current flows from battery *A* to *c*, then through the switch arm to *a*, thence by wire *p* to coils *C*, and by grounded connections *q* and *r* back to battery *A*. When the switch arm is on *d*, current flows from battery *B* to *e*, thence through the metal plate *s* to *d*, through switch arm to *a*, to coils *C*, to grounds *q* and *r*, wire *t* to binding screw *g* and plate *h*, pin *l*, wire *o*, pins *m* and *n*, plate *j*, screw *i* and wire *u*, back to battery *B*. When the switch arm rests on *e*, it also makes contact with the auxiliary contact point *v*, Fig. 14 (*a*), which is connected to *c*, Fig. 14 (*b*), by means of the metal plate *w*. The two wires from the carbon plates of the right-hand end cells of the two batteries are thus connected together, the two wires from the zincs of the left-hand end cells of the two batteries being connected by means of the contact pins *l*, *m*, and *n*, wire *o*, plates *h* and *j*. The batteries being thus connected up in parallel, current flows through binding screw *e* and switch arm to *a*, then to coils *C*, grounds *q* and *r* to battery *A*, and to battery *B*, by way of wire *t*, binding screw *g*, plate *h*, pins *l*, *m*, and *n*, and wire *o*, plate *j*, screw *i*, and wire *u*. When the end of the switch arm is shifted into contact with *f*, the pin *l* is moved out of contact with the plate *h*, while the pin *n* makes contact with the metal plate *x*, thus connecting the carbon of battery *A* to the zinc of battery *B*, and thereby placing the batteries in series. Current then flows through the wire from the carbon plate of the right-hand end cell of battery *B* to *e*, then through plate *s* to *f*, through switch arm *a*, to coils *C*, to grounds *q* and *r*, back to the left-hand end cell of battery *A*, thus completing the circuit.

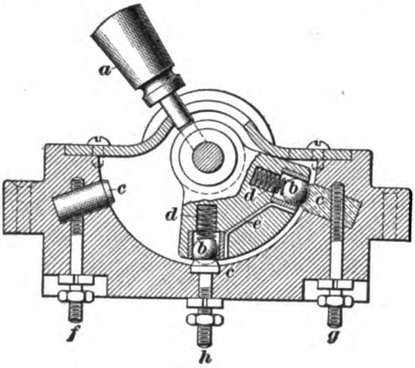

FIG. 15

24. A switch for use where two sources of current are available, as where storage batteries and coils are installed together with a magneto, is shown in section in Fig. 15. By throwing the switch handle *a* to one side, the magneto circuit is closed and the magneto is in operation; throwing the switch handle to the other side cuts out the magneto, closes the battery-and-coil circuit, and places the batteries and coils in operation. The ball contacts *b* are held against the contacts *c* by the springs *d*, and are in electrical connection through the strip *e*. Wires from the two sources of current are led to the binding screws *f* and *g*, the common circuit-completing wire being attached at *h*.

25. A **single-throw, two-pole, knife switch,** or **blade switch,** is shown in Fig. 16 (*a*). The two blades *a* and *b* are insulated from each other, and hinge on pins through the posts *c* and *d*. The lips of each of the other two posts *e* and *f* press against the blade between them with a spring action, so as to make good electrical contact. As ordinarily used, one side of the switch, as *c*, *a*, and *e*, is interposed in one side of an electric circuit, and the other side *d*, *b*, *f* in the other side of the circuit. Thus, if used on a battery circuit, the positive wire from the battery can be connected to *c*, and the negative wire to *d*. The wires leading out to the other part of the circuit are then similarly connected to the posts *e* and *f*, respectively. When the switch is opened by lifting the handle and blades, both sides of the circuit are broken. The term *two pole* is used because both sides of the circuit are connected to the switch.

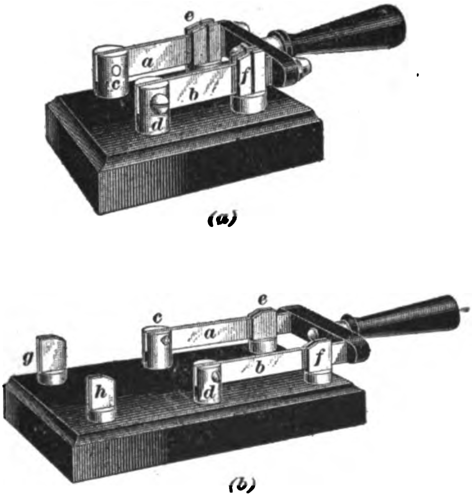

(*a*)

(*b*)

FIG. 16

26. A **double-throw, two-pole, blade switch** is shown in Fig. 16 (*b*). It differs from the single-throw switch just described in that it has another pair of posts to which a second pair of wires can be connected. If used with two batteries, either of which is to supply current to a piece of electrical apparatus, the wires from one battery are connected to the posts *e* and *f*, and the wires from the other battery to posts *g* and *h*. The connections to the apparatus are made at *c* and *d*. Either battery can be put in circuit with the apparatus by throwing the blades to the corresponding position. The term *double-throw* is applied to the switch because it closes a circuit in either of two positions.

Blade switches are not much used on automobiles, but apparatus for charging storage batteries is generally equipped with them.

INSULATED WIRES AND WIRE TERMINALS

27. The insulated conductors used in automobiles are generally made in the form of wire cables having a rather large number of strands. The chief difference between those for high-tension current and those for low-tension current is in the thickness and electric pressure-resisting qualities of the insulation. From an electrical standpoint, the high-tension cable does not need near so much copper as the low-tension one, but is made heavy enough to give it strength to meet mechanical requirements.

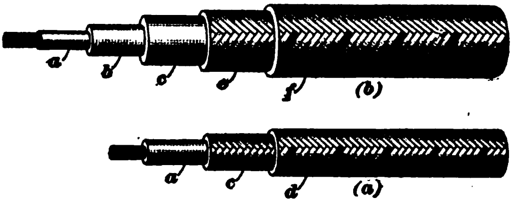

Fig. 17

28. Typical **insulated copper cables** are shown in Fig. 17. The primary, or low-tension, cable is shown in (*a*). The wire core of the cable consists of forty strands of No. 30 tinned copper wire. The insulation consists of one layer of high-grade vulcanized rubber *a*, and the protective covering consists of two braids *c* and *d* covered with two layers of enameled coating baked on. It would take about 12,000 volts to puncture this insulation. The core of the high-tension cable (*b*) is the same as that of the low-tension cable. The insulation consists of three layers of rubber *a*, *b*, *c* vulcanized together. The rubber is protected by two braids *e* and *f*, covered with four coats of enamel baked on in steam-heated ovens. The enamel forms a flexible, insoluble film that protects the rubber from heat, oil, and water, and the braid protects the cable from mechanical injury. More than 40,000 volts is necessary to puncture the insulation of this cable.

29. Copper or brass terminals are generally attached to the ends of insulated wire conductors. For the primary low-tension cables, it is essential to have good metallic contact. This is readily secured by using a drop of solder to fasten the wire and terminal together at one point. It is not necessary generally that the solder shall make a strong mechanical connection. On high-tension cables, soldering between the cable and terminal is never necessary, so far as the electrical connections are concerned. The high-tension current will jump any ordinary small air space that may occur between the different metallic parts. Soldering may be desirable, however, in some cases, to hold the parts together. The terminal piece should be provided with clips, a ferrule, or some corresponding device that will firmly grip the insulation and thus relieve the mechanical stress on the wire core, so as to secure a connection not liable to breakage.

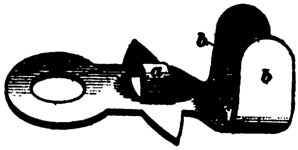

FIG. 18

30. Good battery connectors may be made up from No. 16 flexible lamp cord in 8-inch lengths. The cord is untwisted for the purpose, and each length makes two connectors. The ends of the cords are scraped for a length of about 1 inch, and the bare wire twisted and doubled on itself. The wire is then slipped through a terminal or copper connector of the form shown in Fig. 18, the bare end being run through the stamped loop *a*. The loop is then hammered flat, the wire doubled back on itself, and the clips *b* bent over the insulated part of the wire with a pair of pliers. The wire is then coiled around a lead pencil.

If the binding posts on the battery cells show a tendency to work loose, the nuts may be locked with nuts taken from discarded cells. If, however the wire connections are flexible, such as those just described, and the cells do not shake about, there will be little tendency on the part of the nuts to work loose.

CURRENT-MEASURING INSTRUMENTS

31. Ammeters and Voltmeters.—In connection with automobile ignition, the instruments used for measuring the strength of current in amperes, called **ammeters,** and pressure of current in volts, called **voltmeters,** are generally of small size and of convenient form for carrying, frequently being made to resemble a watch. Their accuracy need not be very great. Such instruments are often combined into one, measuring both the current strength and the pressure, in which case they are called **voltammeters.**

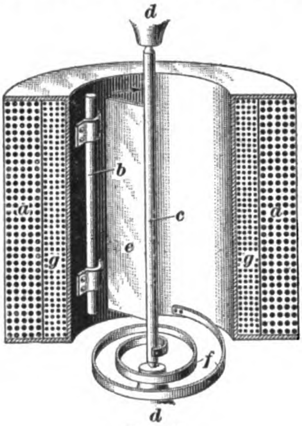

Fig. 19

32. A simple form of instrument for measuring either volts or amperes, or both, according to the winding of the coil through which the current flows in any case, is shown in Fig. 19. For convenience of description, it will first be assumed that the instrument is constructed for measuring amperes of current. A coil of insulated wire *a* is wound on a stationary spool, as shown. A piece of soft-iron wire, or rod, *b* is rigidly fastened to the spool on which coil *a* is wound, and a spindle *c* is pivotally supported by the stationary parts *d*. At *e* is shown a sheet-iron vane carried by the spindle *c*, and at *f*, a spiral spring, one end of which is connected to the spindle and the other to the stationary spool of the coil. All the parts except *b* and *e* are of brass or some other non-magnetic material. The spindle *c* and vane *e* are free to turn on the conical bearings at the ends of *c*, except that this motion is resisted by the spiral spring *f*. The mounting of the spindle *c* is somewhat the same as that of the spindle of the balance wheel of an ordinary time-keeping watch. In the position of the parts *e* and *c* as shown, there is no tendency for the spring *f* to rotate *c* and *e* in either direction.

When an electric current flows through the coil *a*, both the iron wire *b* and the vane *e* become magnetized. The action of the magnetizing current is such that the poles formed in these two parts are at adjacent ends. Thus, if the upper end of *b* is a north pole, the upper end of *e* will also be a north pole; and the lower end of each will be a south pole. The adjacent magnetic poles repel each other. This repulsion causes *e* to swing away from *b* in the direction indicated by the arrow. This movement of *e* and *c* is resisted by the spring *f*. The larger the current that flows through the coil, the greater will be the movement thus given to *e*. By constructing the apparatus in suitable form, the rotation of *e* can be made approximately proportional to the amount of current flowing through the coil *a*, thus affording a practical means of determining the strength of current. As such instruments are ordinarily constructed, an index finger, resembling the hand of a clock, is attached to the spindle *c* and registers on a scale suitably divided and marked to indicate the amount of current flowing. Such an ammeter is connected in series with the apparatus through which the current to be measured is passing, so that all the current flows through the ammeter.

33. If the instrument is to be used also as a voltmeter, then another winding *g* of thin wire and many turns, so as to have a high electric resistance, is added. When used to measure voltage within the range of the instrument, the resistance of this winding is thus made high enough to prevent the flow of current through it to an extent that is appreciable in proportion to the current capacity of the battery or other source of electric current on which pressure measurements are taken.

The reading of the volts is taken by the same index pointer as is used for amperes, but another scale is used, as shown in Fig. 20.

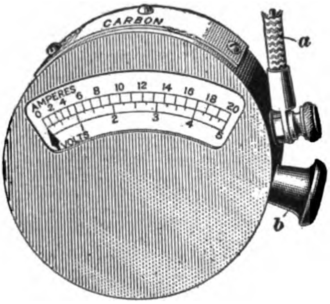

FIG. 20

34. Small, portable instruments for measuring the amperage and voltage of electric circuits are useful in determining the condition of batteries, the current consumption of coils, and the behavior of dynamo-electric generators that are used to furnish direct current for ignition purposes. Such an instrument as is shown in Fig. 20 is used in testing battery cells by touching the part marked *carbon* to the carbon (positive) terminal of the cell, and the insulated cable *a* to the zinc (negative) terminal, which short-circuits the cell. The instrument indicates amperes only when the button *b* is pressed. The button should be pressed for an instant only, barely long enough to allow the needle to come to rest, as a cell is very rapidly depleted by short-circuiting.

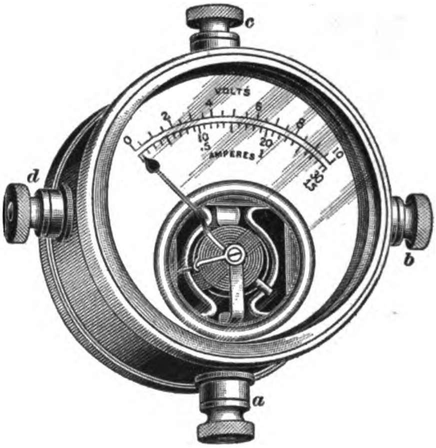

FIG. 21

35. Hoyt Voltammeters.—An instrument of higher grade than that illustrated in Fig. 20, and known as a **Hoyt**

voltammeter, is shown in Fig. 21. It is provided with one voltmeter scale, reading from 0 to 10 volts, and two ammeter scales, one reading from 0 to 30 amperes, for testing battery cells, and the other from 0 to 1.5 amperes, for testing the current consumption of spark coils. The binding post *a* is for the positive connection, whether for amperage or voltage testing, the right-hand post *b* being negative for the 30-ampere scale, post *c* negative for the voltage scale, and post *d* negative for the 1.5-ampere scale. For making test connections, two cable connectors are supplied, one for tests requiring the use of the high-amperage scale and one for tests with the low-amperage scale.

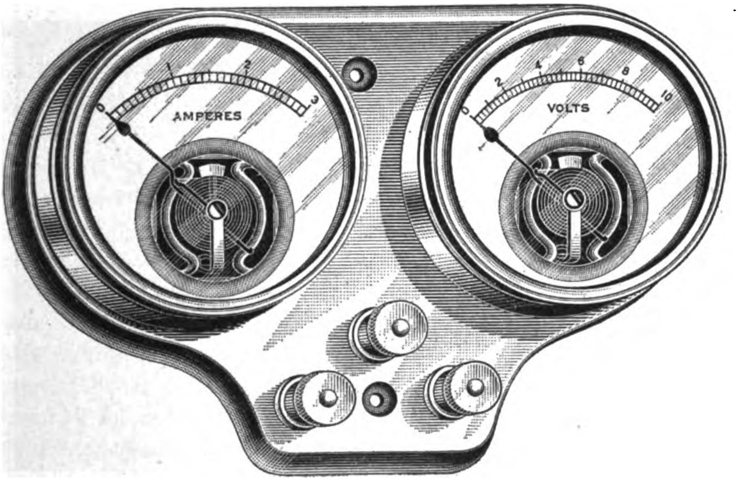

FIG. 22

This instrument operates on what is known as the D'Arsonval principle. A permanent magnet is employed to create a strong magnetic field of practically unvarying intensity. Within this magnet a rectangular coil of fine wire, wound on a centrally pivoted, aluminum, open-frame bobbin mounted between the pole pieces of the magnet, is made to rotate against the opposing influence of a spring by the current that passes through it. Attached to the coil bobbin or frame is a pointer that moves over a scale so graduated as to indicate the strength (amperage) or the pressure (voltage) of the current that causes a deflection of the coil from its normal or zero position.

36. Another Hoyt instrument, operating on the same principle as the one just described, but designed to form an integral part of the ignition circuit, is shown in Fig. 22. It consists of an ammeter, at the left, and a voltmeter, at the right, mounted on a common base that is permanently attached to the dash of the automobile by screws, provided the dash is of wood. In case the dash is of metal, the instrument is attached to an insulating block on the dash. Making the instrument a permanent part of the ignition circuit puts the operator of the car in possession of a continuous and visible record of performance; in this way, faults that could not otherwise be quickly traced and eliminated can be readily detected and remedied under working conditions oftentimes while the car is in actual operation.

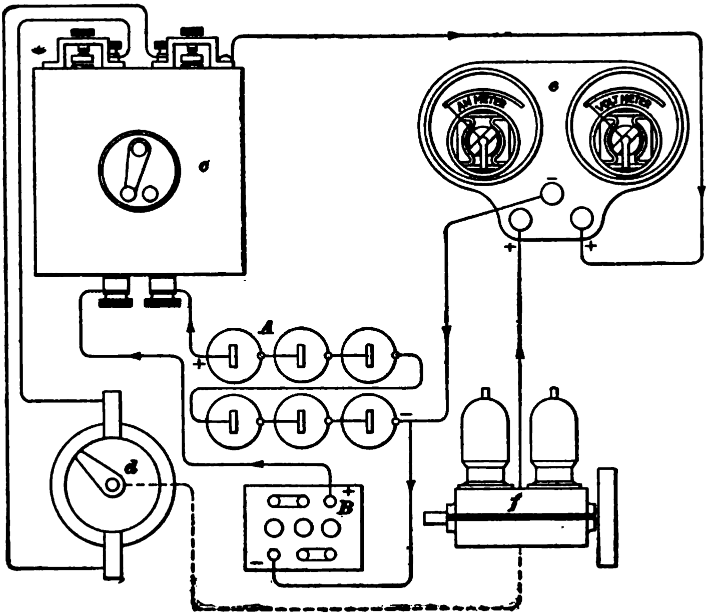

FIG. 23

37. In Fig. 23 is shown a conventional diagram that illustrates how the voltammeter shown in Fig. 22 is connected up. As will be observed, the carbon, or positive, terminal of the dry-cell battery *A*, and the positive, or plus (+), terminal of the secondary, or storage, battery *B*, are connected to terminals of the coil *c*. From these terminals wires are led to the timer *d*, by means of which the primary circuit is closed. From the block carrying the contact screw of either of the units of coil *c*, a wire is led to the right-hand binding post of the voltammeter. The zinc, or negative (−), terminals of both batteries are connected to the center, or negative, binding-post terminal of the voltammeter, instead of the ground, as is customary. The ground, or return-circuit, wire is attached to the left-hand binding post of the voltammeter. Current from the primary dry-cell battery *A*, or from the secondary battery *B*, whichever may happen to be in use at the time, passes through the primary winding of the coil *c* when the circuit is closed by the timer *d*. This current also passes through the voltammeter *e* and engine *f*, through which the return circuit is completed, as is indicated conventionally by the dotted line from the timer shaft to the ground-wire connection on the engine. The direction in which the current flows is indicated by the arrows. From the coil *c*, through the wire attached to the right-hand binding post, current flows into the voltmeter and out to the center binding post, and from this point it flows back to the battery. When the timer closes the circuit through the coil, a part of the current that flows through the timer shaft and ground wire attached to the engine and left-hand binding post, passes into the ammeter and out to the center binding post and then back to the battery. Most of the return current passes directly from the left-hand binding post to the center binding post through an insulated by-pass or short-circuit connection, or shunt, on the back of the mounting.

Ordinarily, the method of wiring shown in Fig. 23 will correctly connect the instrument in circuit. However, with some types of coils, for example, the Kingston, the wire leading to the right-hand, or voltmeter, binding post must be attached to one of the hexagon nuts on the bottom of the coil box. Instead of the contact-screw block, the copper or brass strip, by means of which the several units of some standard makes of coils are connected on the top, may be also used as a place of attachment for the wire leading to the voltmeter.

IGNITION SYSTEMS

LOW-TENSION IGNITION

38. Make-and-Break, or Contact, System.—If the ends of two wires forming part of an electric circuit are brought into contact, thereby closing the circuit, and then quickly separated, a bright spark will be produced as the contact is broken. This phenomenon underlies the operative principle of what is variously known as the **touch-spark, wipe-spark, low-tension, contact,** or **make-and-break, system of ignition,** with which it is necessary first to complete the electrical circuit through the spark-producing mechanism, or igniter, and then break the circuit to obtain a spark for igniting the charge.

39. A contact-ignition system with battery current is shown diagrammatically in Fig. 24. The battery is illustrated conventionally at *A* and the kick coil at *b*. The igniter contact points *c* and *d* go inside the cylinder, and the stationary rod, or electrode, *e*, which carries the contact point *c*, is surrounded by mica or steatite insulation *f*, where it passes through the cylinder wall. The rocker-arm *g* is connected to the spindle *h*, which passes through the cylinder wall and carries the outside member *i*. The three parts *d*, *g*,

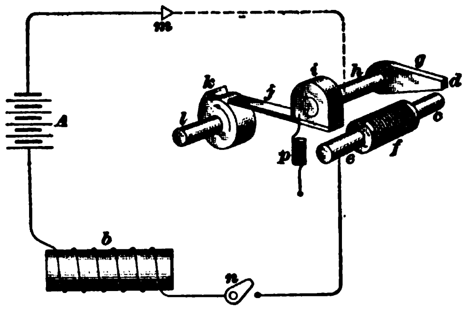

Fig. 24

and *h* are rigidly fastened together, and *h* is free to turn, or rock, in the stationary metallic bearing that surrounds it. A leaf spring *j* is rigidly attached to *i*, and engages with the ignition timer cam *k*, whose shaft *l* is supported by some stationary part of the engine. One terminal of the battery is connected to the frame of the automobile at *m*. The dotted line indicates the electric connection between *m* and *h* through the frame and other parts in metallic contact with the frame. At *n* is shown a hand switch that, when closed, completes the electric circuit, except at the contact points *c* and *d*. This switch is kept permanently closed during the operation of the system. The coil-spring *p* pulls the contact point *d* away from *c*.

40. When the contact points are pressed together, the path of the current is from the battery *A* through the kick coil *b*, the switch *n*, to the stationary rod *e* of the igniter, then to *c*, *d*, *g*, and *h*, and through the parts of the engine and frame to *m*, and back to the battery. The current may flow in the opposite direction if the battery is connected in the reverse way. It is immaterial which way the current flows. When the cam rotates in the direction of the arrow, it lifts the spring *j* and rocks the arm *g* so that the contact point *d* is brought against *c*, thus completing the circuit when the switch *n* is closed. The elasticity of the spring *j* prevents undue pressure between the contact points.

As the cam continues to rotate, the lobe of the cam passes from under *j*, and the spring action of *j*, together with the pull of the coil spring *p*, separates the contact points rapidly. This rapid separation is conducive to the procuring of a hot spark suitable for ignition, without burning the contacts as much as when the separation is slow.

41. It is desirable that the time during which the contacts are pressed together shall be as short as possible, in order to prevent unnecessary demand for current from the battery and possible heating and fusing of the contact points, especially if the contact is not good, as is often the case.

The igniter is generally made adjustable by hand with regard to the time at which the spark is made in relation to the position of the piston of the engine. Such adjustment can be made by varying the distance between the igniter spindle *h* and cam-shaft *l*, Fig. 24. By decreasing this distance, the spark will be retarded so as to come later in the movement of the engine piston; by increasing the distance, the spark will be advanced, or made earlier.

HIGH-TENSION IGNITION

42. **Jump-Spark System.**—With the **jump-spark, or high-tension, system of ignition,** the primary current is converted by an induction coil into a secondary current of sufficiently high tension to cause a spark to jump an air gap.

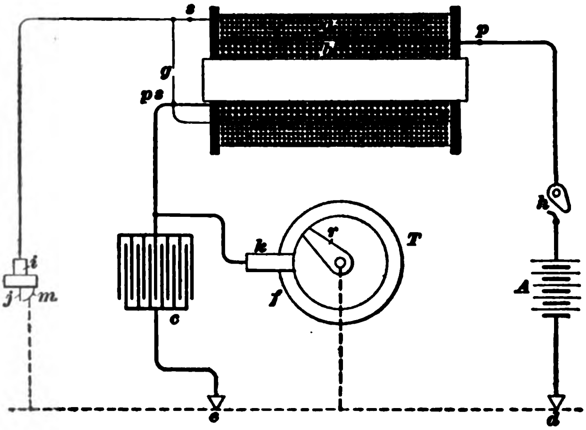

FIG. 25

With this system, a revolving contact timer is employed in place of the snap cam *k*, Fig. 24. As there are no other moving parts, the whole apparatus is extremely simple.

43. A **single-spark, high-tension ignition system** with battery-current supply and non-vibrator, or transformer, coil, is illustrated diagrammatically in Fig. 25. One end of the secondary winding *a* is connected to one end of the

primary winding *b* at *ps*, which may be called the *primary-secondary terminal* of the transformer. This arrangement reduces the number of connecting wires necessary for joining the different pieces of apparatus together. The free end of the primary wire at *p* may be called the *primary terminal* of the transformer. The free end of the secondary wire at *s* is the secondary terminal of the transformer. The primary terminal *p* is connected through the hand switch *h* to one of the terminals of the battery *A*. The other terminal of the battery is connected to the frame of the automobile at *d* and thus grounded. In the timer *T*, the stationary contact piece *k* is supported by the insulating part *f*, and *r* is a rotary part, or rotor, which is also grounded, being electrically connected to the frame of the automobile. The primary-secondary terminal *ps* is connected to the insulated contact piece *k* of the timer. One side of the condenser *c* is connected to the primary-secondary terminal *ps*, and the other side is grounded by a connection to the frame of the automobile at *e*. The secondary terminal *s* is connected to the insulated electrode *j* of a spark plug *i*, and the other electrode *m* of the plug is grounded through the engine and frame of the automobile. The spark gap is between the points of *j* and *m*, the safety spark gap being located at *g*. The hand switch *h* is used to open the primary circuit and thus stop the operation of the ignition apparatus. The dotted lines indicate the grounded return circuit through metallic parts of the frame, engine, etc. of the automobile.

44. When the primary circuit is closed by the timer as the end of the rotor *r* comes into contact with the stationary contact piece *k*, current will flow from the battery *A*, through the closed switch *h*, to the primary terminal *p*, then through the primary coil to the terminal *ps*, then through the timer *T* to the frame of the automobile, and finally to the battery through the connection at *d* between the frame and battery.

At the instant of the breaking of the primary circuit and the jumping of the spark at the spark plug, the high-tension current flows (assuming a direction of flow and taking the spark plug as the starting point) from the insulated part *j* of the plug to the secondary terminal *s* of the transformer, through the secondary coil of the transformer to the primary-secondary terminal *ps*, then through the primary terminal *p*, through *h* to the battery, and through the battery to the frame that carries it to the frame-connected, or grounded, side *m* of the plug *i*; by then jumping the spark gap, the current is again at the assumed starting point *j*.

When the primary circuit is closed, there are two paths that the secondary current may follow between the side *m* of the spark plug and the primary-secondary terminal *ps*. One path is by way of the frame to the timer and thence through *k* and the connecting wire to *ps*, and the other is from *m* through the frame to *d*, then to and through the battery *A* and the switch *h* to the primary terminal *p*, and then through the primary coil to *ps*.

45. In the scheme shown in Fig. 25, the only connecting wire that requires insulation to resist high electric tension is the one between the spark plug *i* and the secondary terminal *s* of the transformer. The switch, battery, and timer may be located anywhere in the primary circuit, so long as the condenser is connected directly across the break made by the timer. If the condenser is separate from the coil, many arrangements of the parts can be made. The condenser and the induction coil, however, are generally placed together inside a box. So far as electrical conditions are concerned, the condenser is connected to the two sides *k* and *r* of the timer. While one part of the timer *T* is generally referred to as being stationary, it is usually made movable through an eighth of a revolution or so, corresponding to an arc of about 45°. This is done so that the timer can be rocked by hand, in order to make the spark come earlier or later in the rotation of the rotor *r*; that is, to advance or retard the spark relative to the motion of the engine piston. The rocking portion comprises the insulation *f* and the contact piece *k*, which are rigidly connected together.

A timer whose contacts snap apart by spring action is sometimes used in connection with a single-spark transformer. as stated in Arts. **17**, **18**, and **19**.

46. A jump-spark ignition system with vibrator coil and two batteries, as applied to a single-cylinder motor, is conventionally illustrated in Fig. 26. At *A* and *B* are shown the two batteries; at *c*, the case enclosing the induction coil and condenser, and on which the coil terminals and vibrator, or interrupter, are mounted; at *h*, a hand-operated switch interposed in the connections between the batteries and coil; at *i*, the spark plug; and at *T*, the timer.

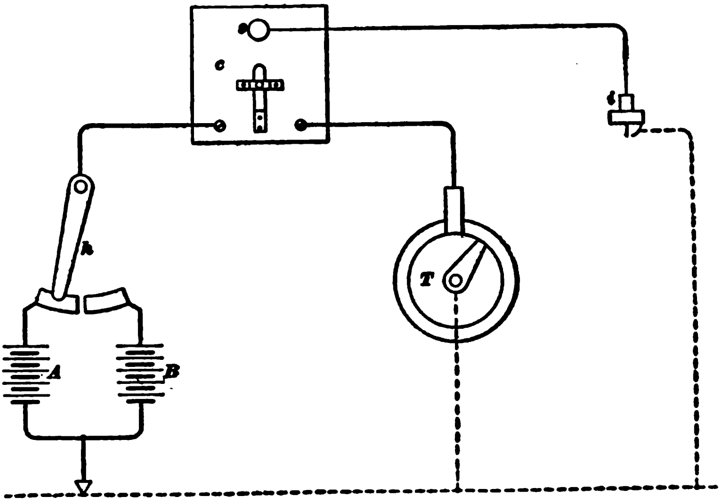

FIG. 26

In the position of the switch blade shown, battery *A* is in circuit and battery *B* is idle. When the switch blade is moved over to the right, *A* is cut out and *B* is put into circuit. In the mid-position of the switch blade, both batteries are put in parallel. Both batteries are cut out by moving the blade either to the extreme right or to the extreme left. The secondary terminal *s* of the coil is connected to the insulated part of the spark plug *i*. The batteries are connected to one of the two remaining terminals of the coil, and the timer to the other. These two terminals are sometimes marked for battery and timer, but in case they are not, the operation of the coil will generally be practically as satisfactory when the battery is connected to the one terminal as to the other. The dotted line indicates the grounded circuit, or frame connection. Either the positive or the negative terminals of the batteries may be connected to the frame. The switch, timer, and batteries may be placed anywhere in the primary circuit.

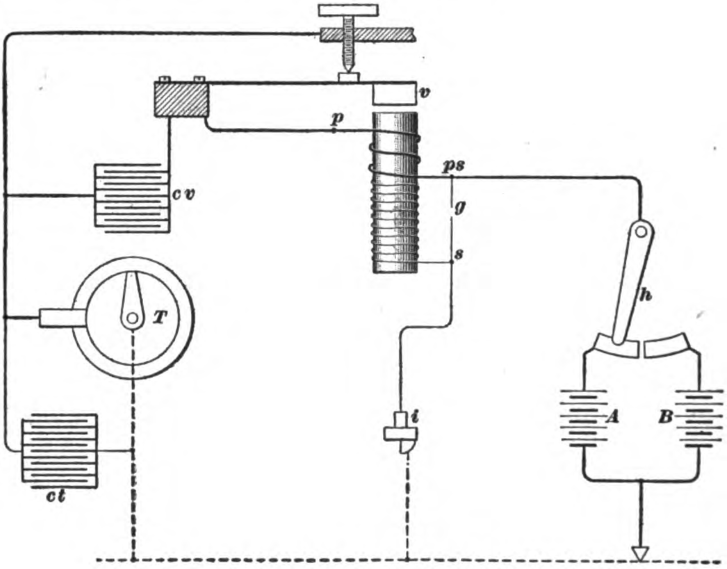

FIG. 27

47. In Fig. 27 is shown a jump-spark ignition system in which provision is made for obtaining a spark, even if the vibrator for interrupting the primary circuit fails to operate. Such failure may be due to fusing of the contact points at the vibrator so that they are not separated by the action of the magnet, or the speed of the motor may be so high that the primary circuit is not closed long enough by the timer to allow the magnet to draw the vibrator away from contact with the screw pressing against it. This result is obtained by adding another condenser to the arrangement shown in Fig. 26.

In Fig. 27, the parts above *T* and *h* represent the ordinary induction coil with a magnetically operated vibrator *v* for interrupting the circuit. At *p* is shown the primary terminal; at *s*, the secondary terminal; at *p s*, the primary-secondary terminal of the coil; and at *c v*, the usual condenser connected across the contact points of the vibrator. The two sides of the additional condenser *c t* are connected respectively to the contact piece and the rotor of the timer *T*. The batteries *A* and *B*, the hand switch *h*, and the spark plug *i* are connected in as usual. The safety spark gap is shown at *g*.

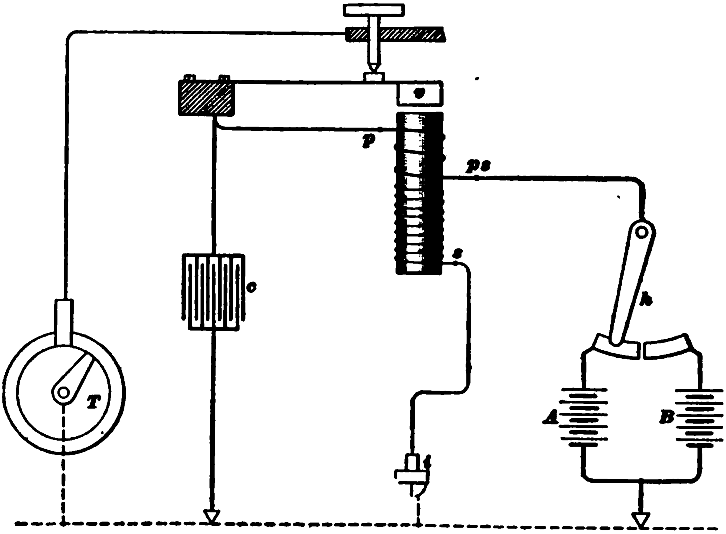

FIG. 28

If the primary circuit is not broken at the vibrator, but only at the timer, then the condenser *c t* acts in the same manner as in the transformer system described in Arts. 43 and 44, and a spark passes at the spark plug. If the vibrator is operating, but happens to be in position to close the circuit at the instant it is opened at the timer, then the condenser *c t* at the timer acts to break down the arc in the timer and to produce a good spark at the spark plug. The condenser also acts to prevent fusing of the timer contacts.

48. The auxiliary condenser *c t*, Fig. 27, can be eliminated and the same effects obtained by *grounding the condenser;* that is, by connecting one side of the regular coil condenser to the frame of the automobile and the other side to the vibrator, as shown in Fig. 28. The condenser is thus placed between the primary winding of the coil on one side and the points of the vibrator and timer on the other, so that the condenser may be said to be in parallel with the vibrator and timer.

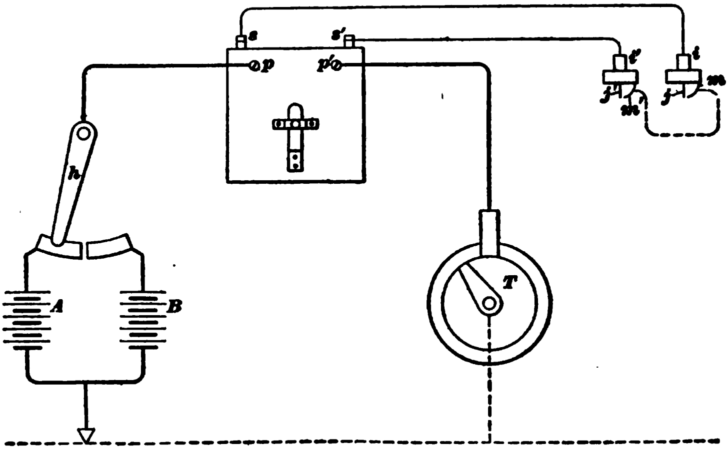

FIG. 29

49. Two Spark Plugs With One Coil.—By using an induction coil with four terminals, jump sparks can be produced at two spark plugs at the same instant. Fig. 29 shows an arrangement of apparatus for this purpose. At A and B are shown duplicate batteries; at h, the switch; at T, the timer; at p and p', the primary terminals of the coil; at s and s', the secondary terminals of the coil; and at i and i', a pair of spark plugs connected in series with the secondary winding of the induction coil.

Assuming a direction of flow, the high-tension current goes from the terminal s to the insulated part j of the plug i, jumps the gap to m, which is connected to the metal of the engine, passes through the engine to m', jumps to j', which is insulated, and then passes to the other secondary terminal s'. If one of the spark plugs becomes fouled or injured, so that the current passes through it without jumping the gap, the other plug will operate nearly the same as usual if it is still in good order.

50. Two-Cylinder-Engine Ignition.—The jump-spark ignition system described in Art. **49** can be applied to a two-cylinder, four-cycle engine in which the explosions are to occur at equal intervals of time. One of the spark plugs is placed in each cylinder. The metal of the engine furnishes the path for the current or circuit between their uninsulated parts.

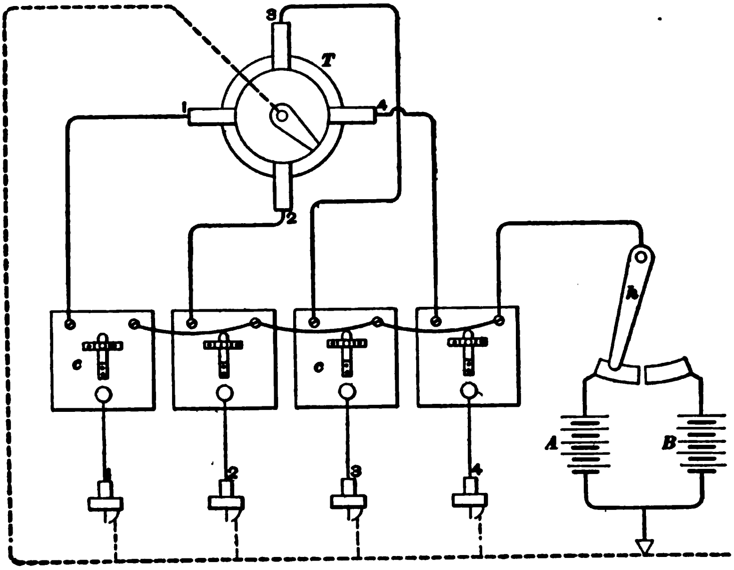

FIG. 30

The spark occurs in each cylinder twice as often as it is needed—once at the proper time for igniting the charge, and once at about the completion of the exhaust stroke of the piston. The latter spark has no effect when occurring at this time, but under some conditions of the setting of the timer, it may come after the fresh charge begins to enter the cylinder. In such a case, the charge is liable to be ignited at the wrong instant.

If the rotor of the timer turns at the same speed as the crank-shaft, only one stationary contact is necessary for the four-cycle, two-cylinder engine; if it turns at one-half the speed of the crank-shaft, two contacts, half a revolution apart, are necessary. The two contact pieces of the timer should be electrically connected together. This method of ignition is seldom used.

The other methods of ignition for two-cylinder motors are practically the same as for engines that have more than two cylinders.

51. **Four-Cylinder Jump-Spark Ignition With Batteries.**—The arrangement of an **individual-coil, jump-spark ignition system** for a four-cylinder engine is shown in Fig. 30. It differs from an arrangement for a single-cylinder engine only in the multiplication of spark plugs, of induction coils, and of the insulated contact pieces in the timer *T*. One of each of these parts is supplied for each of the cylinders. Either battery *A* or battery *B* is connected through the switch *h* to similar primary terminals of all the spark coils *c*, so that the primary coils are in parallel. The other primary terminals are connected one to each contact piece of the timer.

As will be noted, the drawing shows that the wires leading to the timer contacts *3* and *4* are crossed, but they are not in contact at the crossing. This is done so that, if the rotor of the timer revolves left-handed, or counter-clockwise, the sparks will be made in the cylinders in the order *1*, *2*, *4*, *3*, to accord with the requirements of an engine whose pistons in the end cylinders move in unison and in the opposite direction to that of the pistons of the two middle cylinders, which pistons also move in unison with each other. A timer of the kind here used, with four insulated contact pieces, is called a *four-point timer*.

In order to keep the coils in operation in case the contacts of the vibrator stick together, auxiliary condensers, one for each spark coil, can be connected in as shown in Fig. 27; or, the condensers in the coil boxes can be made to act across both the timer and the vibrator contacts by grounding one side of each condenser, as explained in Art. 48.

A *six-cylinder ignition system* of the same nature as that shown in Fig. 30 may be obtained by further multiplication of the spark coils and timer contacts.

DUAL IGNITION

52. Low-Tension Systems.—The wiring for one set of dry cells and a generator in a low-tension ignition system is shown in Fig. 31. When the battery is in use and contact between the insulated and uninsulated electrodes of the igniter is made, current passes from the battery *a* through one blade of the switch *b* to the insulated electrode of the igniter *d*, then through the uninsulated electrode of the igniter to the grounded connection *e*, to the coil *c*, and back to the battery through the other blade of the switch *b*. The kick coil *c* is located between the frame connection, or ground, and the switch *b*. In this position, the coil will be in circuit with a set of batteries substituted for the generator *f* and connected to the same switch wires as now lead to the generator.

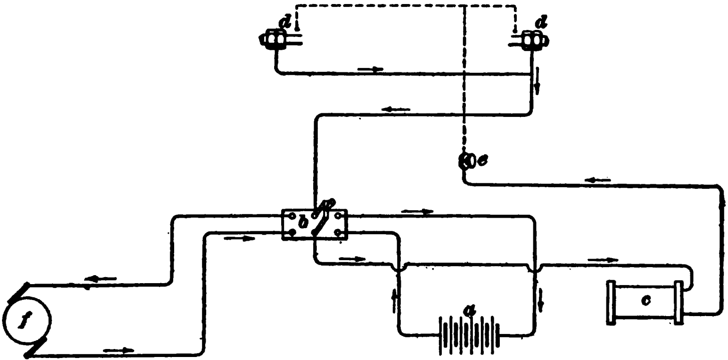

FIG. 31

ELECTRIC IGNITION

(PART 3)

DIRECT-CURRENT GENERATORS

PRINCIPLES OF OPERATION

CLASSIFICATION OF IGNITION GENERATORS

1. The electric generators commonly employed for ignition purposes are divided into two principal classes, namely, those which generate a continuous, or direct, current, and those which generate an alternating current. The former are known as *direct-current generators*, *dynamo-electric generators*, or simply *dynamos*. The latter are known as *magneto-electric generators*, or simply *magnetos*. There are two classes of magnetos, (1) those which generate a low-tension current for the make-and-break type of ignition system and for delivery to both vibrator and non-vibrator induction coils, by which the low-tension primary current is transformed into a high-tension current, which is led to the spark plugs by the heavily insulated secondary wiring, and (2), those which generate a high-tension current, embodying within themselves all the elements necessary to the production and distribution of such current, thereby making the use of induction coils unnecessary. To avoid confusion in classifying magnetos, those which deliver a low-tension current to a step-up coil, there to be transformed into a high-tension current, might be called *coil-type magnetos*. Some magnetos of this class are driven by means of belts or by pulleys pressing against the flywheel; others are driven in synchronism with the crank-shaft by means of gears whose positions have a fixed relation to the point of maximum current production at which the spark takes place. To distinguish the belt-driven types from the gear-driven types of magneto, the former may be called *non-synchronous magnetos*.

ELEMENTARY DIRECT-CURRENT GENERATOR

2. Whenever the number of lines of force enclosed by a coiled conductor is changed, an electromotive force is induced in the coil. If a conductor in the form of a closed loop, or coil, is moved in the direction of the arrows *a* or *b*, Fig. 1, between the poles *N* and *S* of a horseshoe magnet, lines of force will be cut by the coil, and the electromotive force thereby induced will cause a current to flow around the coil. The arrows along the sides of the loop indicate the direction of the current when the motion is in the direction of the small arrow *a*. Some mechanical force is required to make the conductor cut through the magnetic field.

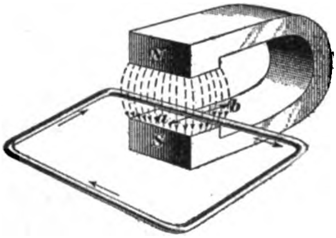

Fig. 1

3. The *direction of the induced electromotive force* in a conductor is the same as the direction in which this force would cause a current to flow if the conductor were made a part of a closed circuit. When a conductor is moved across a magnetic field, the induced electromotive force will act in a direction depending on the direction of the lines of force and the direction in which the conductor is moved. The following rule applies:

Rule.—*Place the thumb, the forefinger, and the middle finger of the* ***right hand*** *each at right angles to the other two; if the forefinger shows the direction of the lines of force and the thumb* *shows the direction of motion of conductor, the middle finger will show the direction of the induced electromotive force or the resulting current* (see Fig. 2).

By always keeping the three fingers at right angles to one another, this rule may be applied to determine the direction of an induced current in any case in which the lines of force and the direction of motion of a conductor are at right angles to each other; for the hand as a whole may be placed in any position that may be necessary to make the forefinger and the thumb point in the proper directions. For example, in Fig. 1, if the forefinger points in the direction indicated by the small arrowheads on the dotted lines representing the flow, or flux, of magnetism from the north to the south pole, and the thumb points in the direction indicated by the arrow *a*, the middle finger will point in the direction of the induced current, the rule applying only to the conductor that is actually cutting the magnetism and not to the other sides of the loop.

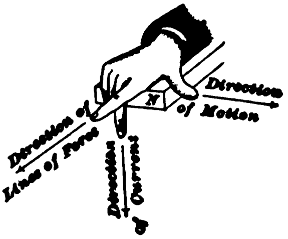

FIG. 2

The *intensity of the electromotive force* depends on the rate at which the conductor cuts across the lines of force; that is, on the number of lines of force cut per second.

4. Essential Parts of an Electric Generator. The simplest of all mechanical motions is that of rotation, and electric generators always use this principle for sweeping the conductors through the magnetic field. There are essentially two parts to such a machine: the *field magnet*, wherein is produced the necessary magnetism; and the *armature*, on or near whose surface the working conductors (those which cut the lines of force) are arranged. These two parts are rotated relatively to each other, it being immaterial, except for convenience, which is stationary and which is rotated.

5. A single conductor can seldom be made to generate a desired voltage, so that on an armature a number of conductors are usually connected up in series and in parallel, in the same way as electric batteries, until the required voltage and current-carrying capacity are obtained.

6. Action of Armature.—The direct-current generators used for ignition purposes generally have armatures whose magnetic cores are in the form of a cylinder that is either smooth or grooved lengthwise. Such an armature is known as a *drum armature*. It is convenient to consider first the nature of the current generated in an elementary form of drum armature with a single closed coil, and then the method of causing the current from a similar coil to flow in only one direction through the portion of the circuit external to the armature.

An elementary drum armature with a single closed coil is shown in Fig. 3 between the pole pieces *a* and *b* of the magnetic field. The armature core *c* is cylindrical in form; the end view is shown. The straight parts *d* and *e* of the coil lie along the cylindrical surface of the drum and are perpendicular to the plane of the paper on which the figure is printed. When the drum is rotating counter-clockwise, as indicated by the feathered arrow just beneath it, and the coil is passing through the position shown, the straight parts *d* and *e* of the coil are cutting through the magnetic lines of force. This induces an electromotive force and causes an electric current to flow through the wire of the coil in the direction indicated by the two full arrows on the front of the coil and by the dotted arrow on the back end. The current flows in this direction during the time the part *d* is cutting through the lines from *1* to *2*, and the part *e* from *3* to *4*. The current flows through the front of the coil in the direction from the north pole to the south pole. While *d* is moving from *2* to *3* and *e* from *4* to *1*, no magnetic lines of force are cut; consequently, no current

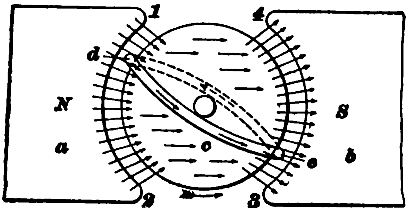

Fig. 3

flows through the coil. As *d* continues to move from *3* to *4* it cuts through the same lines and in the same direction that *e* did before; at the same time *e* cuts through the lines previously cut by *d* and in the same direction as *d* cut them. Therefore, when *e* is passing through the position shown in Fig. 4, the electric current will flow through the front of the coil from *e* to *d*, as indicated by the full arrows. The direction of flow through the front of the coil is from the north pole toward the south pole, as before, but, inasmuch as the sides *d* and *e* of the coil have interchanged positions, the current flows through the wire in a direction opposite that which it first had. An alternating current is induced in the coil by its rotation in the magnetic field, as described.

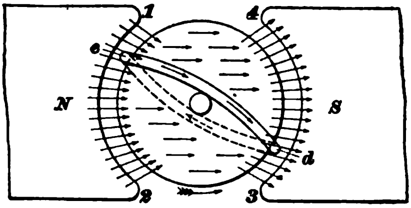

FIG. 4

7. The alternating current in this elementary armature reverses its direction of flow twice during each revolution. The reversals of current occur while the coil is passing through its positions perpendicular to the general direction of the magnetic flux. In these two positions all the magnetic lines pass through the coil, but it is cutting none of them by its motion. In one of these positions the straight part *d* of the coil lies between *1* and *4* and the other straight part *e* lies between *2* and *3*. These are the two neutral positions of the coil, in which it is electrically inactive while the armature is rotating.

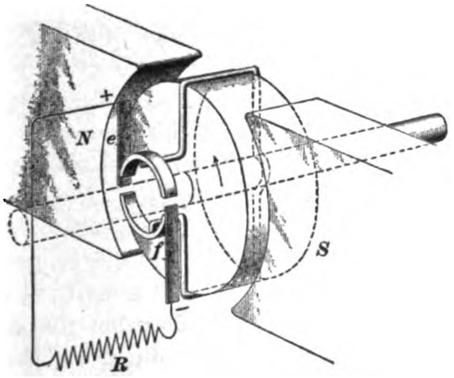

FIG. 5

8. In Fig. 5 is shown a simple form of direct-current generator having an armature on which there is a single turn of wire terminating in a ring split into two parts, approximately half rings, on which the stationary *brushes e*, *f* slide as the ring rotates. The split ring is the *commutator*. The half rings, or segments, are insulated from each other and from the shaft. The brushes are so placed that, at the instant when the coil passes through its neutral, inactive position and the electromotive force in it reverses, the segments each break contact with one brush and slide under the other. The electromotive force generated in the conductor passing under the north pole when the core and the coil are rotating counter-clockwise, as shown by the arrow, is always toward the segment under the brush *e*; hence, the current leaves the armature by way of brush *e*, which is therefore marked +, passes through the external circuit *R*, and returns by way of brush *f*, which is therefore marked −.

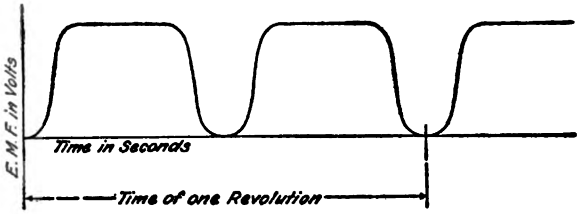

FIG. 6

The current through the external circuit, instead of flowing alternately in opposite directions, flows in one direction only, but is in impulses, or pulsations, and may be represented by the full-line curve in Fig. 6.

By evenly spacing a number of coils on the armature core and connecting them to a commutator having the proper number of segments, two coil ends to each segment, the electric impulses can be made to so overlap each other that a smooth, or continuous, direct current is obtained in the external circuit.

DETAILS OF CONSTRUCTION

ARMATURE AND COMMUTATOR

9. In a solid-iron armature core rotating in a magnetic field, there are set up in the iron of the core electromotive forces that cause local currents, or *eddy currents*, to flow.

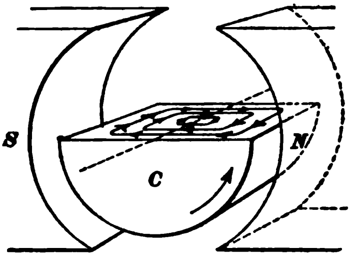

FIG. 7

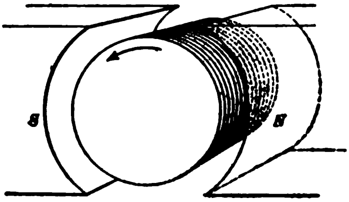

FIG. 8

Fig. 7 shows how these currents circulate. The lower half of a solid iron core is shown at *C*. When the core rotates, eddy currents flow in the iron, as shown by the lines and the arrowheads on the section. These currents cause the core to heat, and they serve no good purpose. To prevent them, armature cores are usually *laminated*, as shown in Figs. 8 and 9 (*a*); that is, they are built up of disks of the proper size punched from sheet iron.

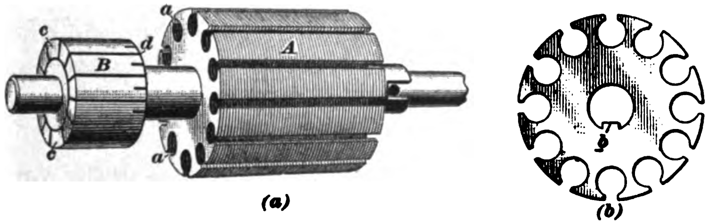

(*a*) (*b*)

FIG. 9

10. Fig. 9 (*a*) shows an armature core *A* for a small ignition dynamo, and (*b*) shows one of the laminations, or disks, of which the core is made. The laminations are punched from soft sheet iron with a suitable die, so that, when assembled in the core, the slots *a* are formed. On the inside of each disk is a shoulder *b* that slips into a notch in the brass sleeve on which the disks are assembled. The disks are compressed by hydraulic pressure and clamped together, and the sleeve with the complete core is then slipped over the shaft and keyed tightly to it.

The commutator *B* consists of copper segments *c* insulated from each other by thin sheets, or *bodies*, of mica *d*, or a composition of mica and shellac called ***micanite;*** they are also insulated from the shaft or sleeve on which the commutator is assembled by cylinders or cones of the same composition. The commutator also is securely keyed to the shaft.

11. The armature-core slots are insulated with suitable paper or cloth insulation, and insulated wire is wound in the slots—a certain number of turns in each coil, the number depending on the voltage desired and on the speed at which the dynamo is to run. The core and commutator shown in Fig. 9 are designed for twelve armature coils. Fig. 10 shows one of these armatures completely wound. This form of armature reduces the air gap between the armature and poles of the magnetic field. The magnetic flux is consequently greater, and the wires cut through a stronger magnetic field than when they are wound on a smooth core.

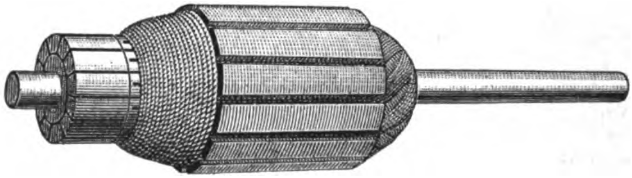

FIG. 10

12. The wires leading from the armature coil to the commutator segments can be connected to the segments in such a manner as to bring the brushes in any desired position, the only limitation being that the brushes must be diametrically opposite each other in a bipolar (two-pole) machine. This is accomplished by bringing the ends of the neutral coil or coils to the segments where the brushes are to make contact.

FIELD MAGNETS AND COILS

13. If a current of electricity flows through a wire wound around the straight portions of a **U**-shaped bar of soft iron, as indicated in Fig. 11, the ends of the bar will become the north and south poles of the magnet. The relative directions of winding the two coils are the same as if the winding had been continued along the bar over the curve, or *yoke*, from one coil to the other. By providing suitable pole pieces at the ends of an electromagnet of this form, it can be used for producing the magnetic field of an electric generator.

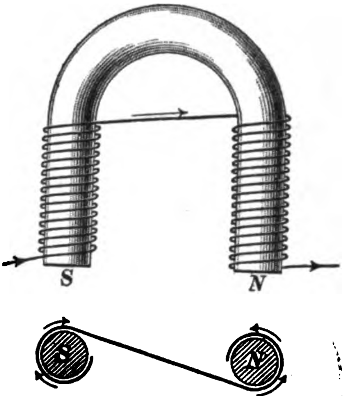

FIG. 11

14. A more compact form of field magnet is obtained by the construction shown in Fig. 12. In this design, the magnet poles are projections from a circular piece, instead of the ends of a **U**-shaped core of the form just described. The winding on both pole pieces is in the same direction, so that the poles are made north and south. The magnetic flux divides equally through the two halves of the ring, as indicated by the feathered arrows.

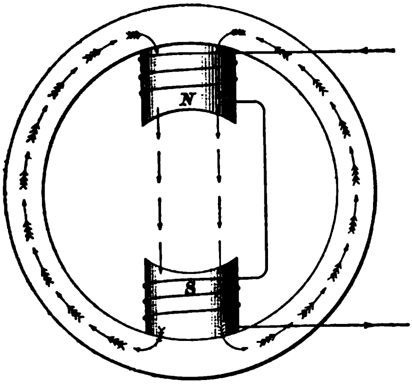

FIG. 12

15. Instead of using an electromagnet, in which part of the current that is delivered by the armature is utilized for magnetizing the core of the magnet, **permanent magnets** may be employed, as shown in Fig. 13, for producing the field in which the armature of the direct-current magneto-electric generator rotates. The armature is wound so that the brushes make contact at, or near, the top and the bottom segments of the commutator, to which the inactive coils are always connected in this arrangement. When the armature is rotating, the current flows continuously as a direct current from the positive (+) brush out through the external circuit *R* and back to the negative (−) brush.

16. In an electromagnet, the strength of the **magnetizing force,** or **magnetomotive force** (abbreviated to M. F.), by which the lines of force are produced, is proportional to the strength of the current flowing through the field coil, or magnetizing coil, and to the number of complete turns through which the current flows. The product of the current, in amperes, and the number of turns in the field coil gives the magnetizing force, in *ampere-turns*. A current of 10 amperes flowing through a field coil of 20 turns gives exactly the same magnetizing force as 1 ampere through 200 turns, or 200 ampere-turns in each case.

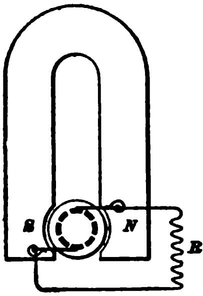

FIG. 13

17. When the number of ampere-turns on an electromagnet is increased, the number of lines of force, or the magnetism, through the magnet, is increased, but not in direct proportion. When there are few lines of force through a magnet, a little increase in the magnetizing force will produce a considerable increase in magnetism; but, if the magnetizing force is increased sufficiently, a point will be reached where but very little further increase of magnetism can be obtained. The magnet core is then nearly filled, or *saturated*, with magnetism. Complete saturation is never reached, but there is a limit beyond which it is impracticable to increase the magnetizing force further; dynamo-electric generator field magnets are generally run at considerably below magnetic saturation.

18. Dynamo-electric generator fields may be *separately excited* or *self-excited*, according as the exciting current is obtained from a separate source or from the dynamo itself. There are several methods of using current from a direct-current generator to magnetize, or excite, its own field magnets. **Self-excited dynamo-electric generators** may be *series-wound*, *shunt-wound*, or *compound-wound*. In a **series-wound electric generator,** the current that leaves the positive brush flows through the external circuit and then through the field coil before returning to the negative brush. The field winding is thus in series with the external circuit—hence the name *series-winding*. If the current through the external circuit, or the *load*, is increased by an increase in the speed of rotation of the engine by which the armature is driven, the current through the series field winding must likewise increase, thus increasing the magnetizing force and consequently the number of lines of force. The greater the number of lines of force cut by the armature coils, the greater is the electromotive force generated; hence, the greater the load on a series-wound generator, within the limits of its capacity, the greater is the electromotive force it will generate. Since an increase in the speed of rotation of the armature increases the load and consequently the electromotive force, series-wound generators are not used for ignition purposes on automobiles, because it is desirable to maintain as uniform a voltage as possible with wide variations of engine speed.

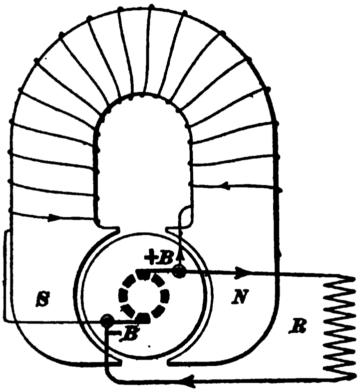

Fig. 14

19. The method of field excitation that probably finds most application to direct-current ignition generators is shown in Fig. 14, which illustrates the connections for a **shunt-**

wound dynamo-electric generator. The field magnet is wound with an exciting coil whose ends are connected to the brush terminals $+B$ and $-B$. The external circuit R is, of course, connected to the brush terminals. The field coil thus forms a shunt, or by-path, for part of the current delivered by the armature. The field coil consists of a great number of turns of small insulated wire. The resistance of the field coil is great enough to prevent a flow through it of more than a small proportion of the amount of current that the generator is designed to supply.

When the external circuit R is closed, as shown, current flows through both the external circuit and the field coil. The amount of current flowing through each circuit is inversely proportional to the electric resistances of the circuits. The amount of current flowing through the armature is the sum of the amounts in field and external circuits. If the external circuit R is broken and its current stopped, the current through the field coil will continue to flow as before.

When the armature stops rotating, the current through the field coil also stops, and the field loses most of its magnetism. There is remaining, however, sufficient *residual magnetism* to induce enough electromotive force in the armature to cause the generator to "pick up" and furnish current in the usual manner.

As the speed of rotation of the armature of a shunt-wound generator increases, the electromotive force at the terminals of the generator becomes less; this makes the field current or magnetizing force less, thus causing a decrease of magnetism and a further decrease of voltage. This peculiarity makes a shunt-wound generator very sensitive to changes of speed. However, by proportioning the field windings so that the magnet cores will be very highly saturated, a slight change of field current will produce but little change in the number of lines of force, and the change of voltage with slight changes of speed will therefore be small.

20. **A compound field winding** is a combination of a series and a shunt winding. The series-winding usually consists of only a few turns, the larger part of the magnetomotive force being furnished by the shunt winding, both of which tend, as usually connected, to increase the generated electromotive force as the speed of rotation increases. For operating ignition devices and especially electric lights, it is very essential to reduce the great variation in electromotive force due to the change in speed. This may be done by connecting a series field so as to oppose a shunt field, properly proportioning them, and automatically regulating, if necessary, the current in one field winding.

21. The intensity of the electromotive force generated by a dynamo-electric generator depends, first, on the number of coils on the armature and the number of turns of wire per coil, that is, on the total number of armature turns; second, on the intensity of the magnetic field; and, third, on the speed at which the armature is rotated. Increasing any one of these three quantities, the others being unchanged, increases the voltage of the generator.

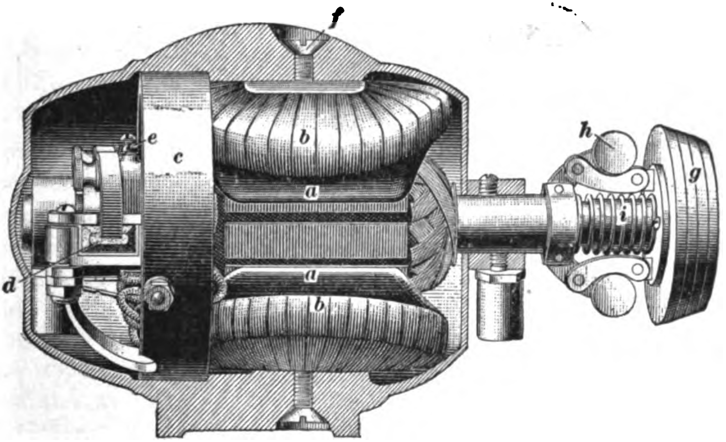

Fig. 15

22. A self-excited direct-current generator constructed on the principles mentioned in Art. 18 is illustrated in Fig. 15, which shows the complete ignition dynamo with part of the field frame cut away so as to show the various parts of the machine in place. The armature rotates between the poles *a*, each of which has an exciting coil *b*. A brass ring *c*, fitted into the body of the machine, supports the brackets that carry the commutator bearing and the brush holders. This ring with the brackets, bearing, brush holders, and carbon brushes is shown in Fig. 16. The brushes *d*, which in this case are blocks of carbon or graphite, are shown removed from the holders; when in place they are held against the commutator by springs *d'*. The brushes stand radially, to allow the armature to rotate in either direction without injury to the brushes. Conducting wires connected to the binding posts *e*, which are in electrical contact with the brushes, convey the current to the external circuit.

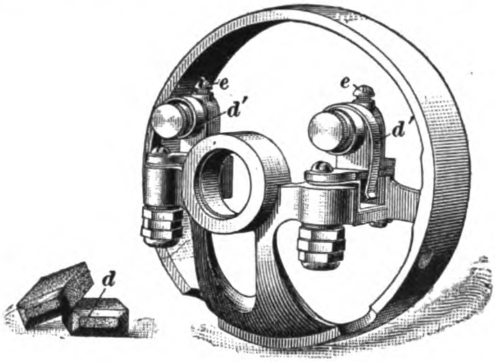

FIG. 16

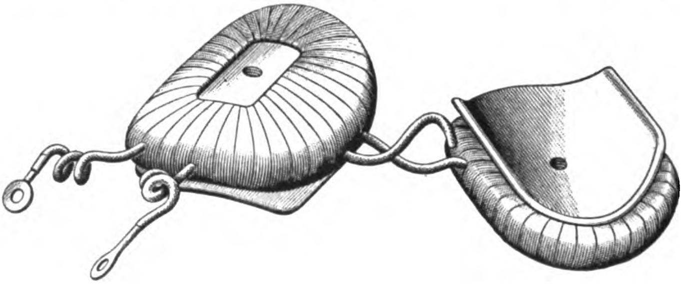

FIG. 17

23. The pole pieces are removable, and are held in place by screws *f*, Fig. 15, through the frame. Fig. 17 shows the pole pieces and field coils removed from the frame. After the coils are wound and insulated with wrappings of tape, etc., they are placed on the poles before the latter are put into the generator. It can be seen that the poles are considerably broadened at the end next to the armature.

24. The generator shown in Fig. 15 is driven by a cone-shaped friction wheel *g* that bears against the rim of the flywheel. The axis of the armature is set at an angle with the flywheel. Governor arms carrying the weights *h* are attached by two pins to a split ring fastened to the armature shaft. Bearing against this split ring is a coiled compression spring *i* that forces the friction wheel *g* against the flywheel. The centrifugal force of the rotating governor weights *h* is transmitted to the flange of the friction wheel *g* by means of the links shown, pulling the friction wheel back against the influence of the compression spring and reducing the pressure of the friction wheel against the flywheel.

When the speed of the armature reaches a predetermined maximum value, the reduction of pressure thus caused between the friction surfaces becomes sufficient to allow the friction wheel to slip on the flywheel. The armature speed is thus maintained nearly constant as long as the flywheel rotates as fast as, or faster than, is necessary to drive the armature at the required speed. The diameter of the friction wheel is made small enough to give the armature its maximum speed when the flywheel is rotating much slower than the speed of an engine running by its own impulses. There is consequently continuous slipping between the pulley and flywheel when the engine is running.

A direct-current generator of this form for ignition use generally is designed to give a pressure up to 10 volts, or somewhat more, and from 10 to 12 amperes of current. For automobiles, a direct-current generator gives its best service when used in conjunction with a storage battery.

METHOD OF INSTALLATION

DIRECT-CURRENT GENERATOR AND STORAGE BATTERY

25. Storage Battery "Floated on the Line."—A direct-current generator and a storage battery, arranged to operate in conjunction by the method known as "floating the battery on the line," are shown diagrammatically in

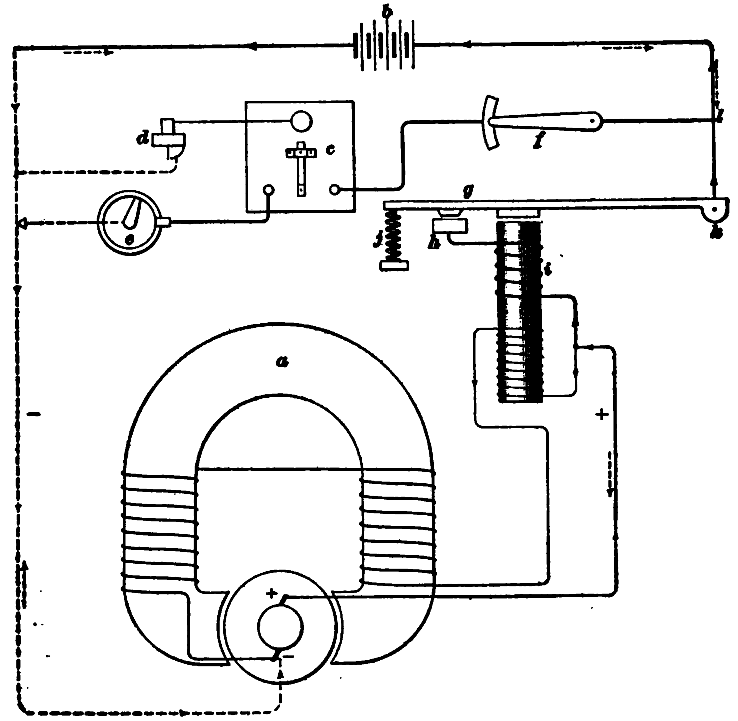

FIG. 18

Fig. 18. In this illustration, the generator is shown at *a*; the storage battery, at *b*; the induction coil, at *c*; the high-tension spark plug, at *d*; the timer, at *e*; and a hand switch, at *f*. In the system is included an automatic cut-out for cutting out the armature of the generator from the main

circuit in case the speed of the generator becomes so low that its voltage drops considerably below that of the storage battery. With another type of the generator, shown in Fig. 15, the automatic cut-out is incorporated as a part of the generator. The circuit-breaker arm *g*, Fig. 18, of the cut-out has a contact point that makes contact with *h*, to which one terminal of the winding of the electromagnet *i* is connected. At *j* is shown a compression spring that tends to force the arm *g* away from the magnet and the contact piece *h*.

When the apparatus is in operation and the generator is producing a voltage higher than that of the storage battery, the current from the positive (+) brush of the generator flows to the cut-out magnet *i* and then divides. Part is shunted through a small-wire winding of numerous turns on the magnet, then through the field-magnet winding of the generator, and back to the negative brush of the generator. This shunt current magnetizes the core of the cut-out sufficiently to draw the circuit-breaker arm *g* toward the core against the resistance of the spring *j*, thus bringing the contact point on *g* against the contact piece *h*. The balance of the current from the positive brush passes around the magnet *i*, through a coarse-wire winding of few turns to the contact piece *h*, then through *g* to *k*, and out to the junction point *l*.

26. If the voltage produced by the generator at the point *l* is just equal to that of the storage battery, then all the current in the main line from the generator will pass through *f* and the induction coil *c*, thence through the timer *e* to the frame connection, and back to the negative brush of the generator. Under this condition, no current flows through the storage battery in either direction; it is neither discharging nor being charged.

In case the speed of the generator increases so as to produce a voltage at *l* higher than that of the storage battery, current will also flow through the storage battery against its electromotive force, thus charging the battery. The direction of current flow through the system under this condition is indicated on circuits by the arrowheads. The current flowing in the direction thus indicated in the main circuit acts together with the shunt current to strengthen the cut-out magnet and maintain good contact at *h*.

On the other hand, if the generator slows down, so that its voltage is less than that of the storage battery, it will not deliver any current to the system. Under this condition, the storage battery will furnish the current for the spark coil. If the voltage of the generator falls considerably below that of the storage battery *b*, the latter will send current back through the armature of the generator in the direction indicated by the broken arrows alongside the lines of the circuit. This current passes in the reverse direction from that indicated through the coarse winding of the automatic cut-out, and opposes the magnetizing effect of the fine-wire, or shunt, coil. The cut-out magnet thus becomes weakened to such an extent, before the reversed current becomes great enough to injure the generator, that the expansive action of the spring *j* forces the circuit-breaker *g* back so as to break contact at *h* and thus interrupt the main current. The generator is thus protected against excessive current, which would be injurious to its armature and commutator in case of slowing down or stopping, and exhaustion of the battery is prevented.

27. When the speed of the generator again increases to normal, the current sent through the shunt coil becomes great enough to magnetize the core of the cut-out and draw the arm *g* toward the magnet, thus again closing the main circuit and reestablishing the normal condition of operation.

The speed of the generator can be adjusted by moving it relatively to the flywheel against which the friction wheel presses. By thus regulating the speed of the generator so that its voltage is about that of the battery when fully charged, current will be delivered to keep it always well charged after the generator has been running for some time. The voltage of the system is practically that of the battery.

The advantage of this system is that a constant electric pressure is always at hand. This is a convenient feature for starting the engine and can also be utilized for electric lighting. The lights on the vehicle can be kept burning whether the engine is running or not. The length of time that the lights can be burned when the generator is not running depends, of course on the current required for them and on the capacity of the battery.

MAGNETO-ELECTRIC GENERATORS

PRINCIPLES OF OPERATION

THEORY OF THE MAGNETO GENERATOR

28. Law of Electromagnetic Induction.—The action of the magneto generator depends directly on a law of electromagnetic induction. One way of stating this law is, that if the number of lines of force passing through a coil of wire is varied, an electromotive force will be set up in the coil, the intensity of which will depend on the rate at which the lines are varied, and the direction of which will depend on the direction of the lines and whether their number is being increased or diminished. One way of varying the number of lines through a coil is to pass a variable current through another coil wound on the same core, as in an ordinary induction coil. Any changes in the strength of the current in the primary winding cause corresponding changes in the strength of the magnetic field, which, by the law just stated, produce electromotive forces in the secondary coil. Another way of changing the number of lines of force passing through a coil is to move an electromagnet or a permanent magnet in the vicinity of the coil. Still another way is to move the coil with respect to the magnet; and it is by this method that the magneto generator is made to produce electromotive forces, and, therefore, when the circuit is closed, corresponding currents.

29. Induction in Revolving Loop.—In Fig. 19 is shown a closed loop of wire that may be revolved about a horizontal axis *x x* within the field of a set of three permanent magnets *N*, *S*. The lines of force are indicated by the horizontal arrows, their direction being from the north pole to the south pole according to the usual conception of their flow. The rotation of the loop about the axis *x x* in the direction of the curved arrow may be given by any suitable means.

When the loop is in its horizontal position, it will lie in a plane parallel to the lines of force, and therefore will include none of the lines. As it is turned into the position shown by the full lines, it will include more and more of the lines of force, and therefore will have an electromotive force and a corresponding current set up in it in the direction of the arrows *a*. When the coil reaches its vertical position, it will include all the lines of force, and, from that point on, the number of lines through the coil will be in the same direction, but will be decreasing. Therefore, the direction of the current through the coil will change after passing the vertical position, and the flow of current will then be indicated by the direction of the arrows *b*.

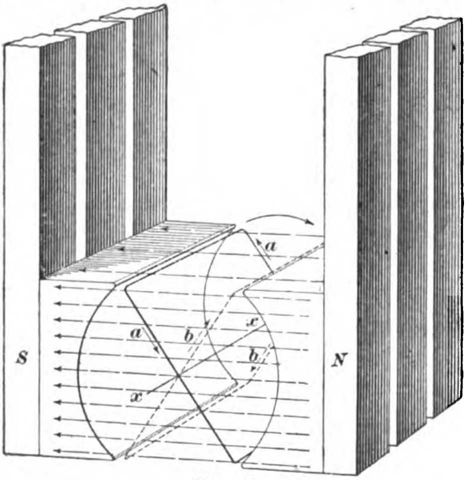

FIG. 19

30. If the coil is revolving at a constant speed, the rate of change of the lines of force through the coil will be very slow as it approaches and recedes from its vertical position, being zero when the plane of the coil is at right angles to the direction of the lines of force, and therefore the induced electromotive force here is zero. As the coil approaches its horizontal position, the rate at which the number of lines through it is changing will increase, and the electromotive force will therefore increase correspondingly, although the actual number is more and more rapidly being reduced to zero. When the coil reaches its horizontal position, the electromotive force in it will be a maximum because the rate of change of the lines of force is a maximum, although the number threading through the coil is zero. At that point, the number of lines passing through the coil again begins to increase; this would produce a change in the direction of the electromotive force were it not for the fact that the direction of the lines through the coil relative to the plane of the coil also changes. The electromotive force is therefore at a maximum at the horizontal position of the coil, because the rate of change of the lines through the coil at that point is a maximum. As the coil again approaches its vertical position, the rate of change becomes less and less, and as it reaches that position, no change takes place, and the electromotive force therefore becomes zero. From this point on to the starting point, the number of lines decreases, therefore, again producing an electromotive force in the opposite direction, which becomes a maximum as the horizontal position is reached.

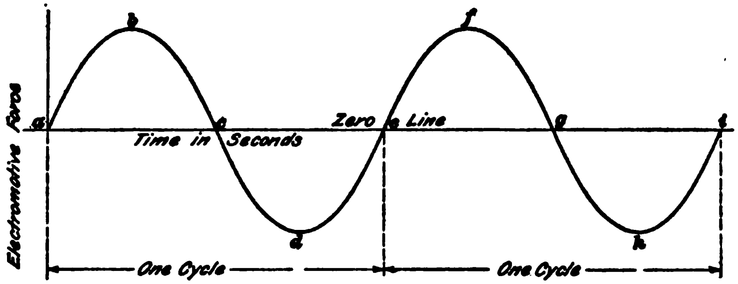

FIG. 20

31. Graphic Representation of Magneto Current. The flow of the current to and fro in the coil may be represented by a curve, such as is shown in Fig. 20, the distances above or below the horizontal axis *a i* being made proportional to the instantaneous values of the current or the electromotive force, whichever the curve is considered to represent. Assuming the curve in Fig. 20 to be an electromotive force curve, the point *a* on it corresponds to the vertical position of the loop in Fig. 19. At this point no electromotive force is set up in the loop, and therefore the point *a* is on the horizontal axis of the curve. As the loop rotates on its axis, the electromotive force gradually increases until it lies in a horizontal plane, where the electromotive force is a maximum because the lines of force are then being cut by the loop at a maximum rate. This condition is represented by the point *b* on the curve where the electromotive force is a maximum. From the horizontal position of the loop in Fig. 19, the electromotive force remains in the same direction, but decreases until the coil again reaches a vertical position, when it becomes zero; this is represented by the point *c* on the curve. At this point, the direction of the electromotive force changes and the curve passes below the horizontal line; and during the next half revolution of the loop, while approaching the second horizontal position, the changes are of the same nature, but in an opposite direction, the electromotive force reaching a maximum in this direction at the point *d* corresponding to the second horizontal position of the loop, and again decreasing to zero, as shown at *e*, when the loop is at the same vertical position from which it started. A complete revolution of the coil, therefore, produces one complete *cycle* of changes in the electromotive force and in the current, as represented by the curve *a b c d e*, the curve *e f g h i* representing a second similar cycle of changes in the electromotive force. While in this case the electric cycle is completed during one revolution of the armature, some magnetos are so constructed that the complete electric cycle is passed through in less than one revolution of the armature.

32. The electromotive force generated in the coil is *alternating* and if the coil is made a part of a closed circuit an alternating current will flow through the circuit. If the electromotive force generated while the coil is passing under one pole is called *positive*, that generated while passing under the other pole will be *negative*, and the loops of the curve in Fig. 20 are made to indicate the change in direction by their reversed position with reference to the zero line.

33. Current Frequency.—The **frequency** of an alternating current is generally measured in the number of its electric cycles per second. A rapidly alternating current has *high frequency;* a slowly alternating current has *low frequency.*

ELEMENTARY MAGNETO GENERATOR

34. An elementary form of alternating-current magneto-electric generator is illustrated in Fig. 21, which shows the armature core and pole pieces *N* and *S* of permanent magnets

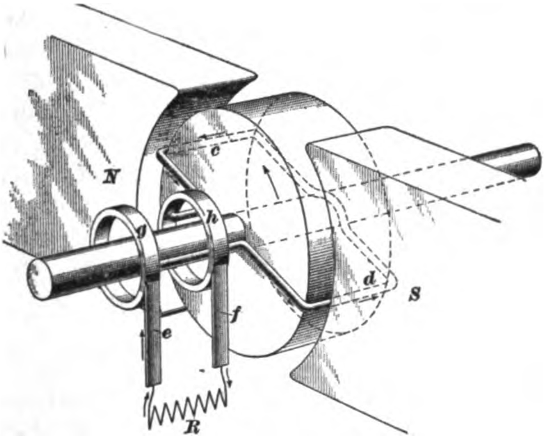

Fig. 21

to which they are attached, and also a coil consisting of two active conductors *c* and *d* connected in series and having their free ends joined to two metal *collector rings*, or *slip rings*, *g* and *h*. As the armature core and the coil rotate, conductor *c* is passing under a north pole at the same time that conductor *d* is passing under a south pole, so that the electromotive forces generated in the two conductors, though opposite in direction with reference to the poles, are the same in direction with reference to the coil; hence, the electromotive force between the collector rings is the sum of the forces generated in conductors *c* and *d*. Stationary copper strips *e* and *f*, called *brushes*, rub on the collector rings as they rotate with the armature, and an alternating current flows through the brushes and the external circuit *R*. The arrows along the conductors and the external circuit show the direction of the current at the instant represented. When the armature has rotated until the conductors *c* and *d* have exchanged positions, the direction of the current through the coil and the external circuit will be reversed.

35. Instead of having but a single turn of wire, as in the loop shown in Fig. 21, a coil consisting of a great number of turns is used in practice, so that the electromotive force generated in each turn may be added to that of all the others. Furthermore, in order that the greatest possible number of lines of force may flow between the magnet poles and through the coil, the coil is wound on a core of soft iron adapted to fit closely between curved polar extensions, or pole pieces, of iron secured to the poles of the permanent magnets.

DETAILS OF CONSTRUCTION

ARMATURE CORE AND WINDING

36. The magneto-electric, or alternating-current, generators used for ignition purposes usually consist of an armature core *a*, Fig. 22, having wound thereon a single coil of many turns of fine insulated wire, and arranged to rotate between the poles *b* of one or more **U**-shaped permanent magnets *N*, *S*. The armature core is usually made with a cross-section resembling the letter **H**, as shown by the end view in Fig. 22 and the perspective view in Fig. 23 (*a*), and may be solid iron or laminated, the best ones being laminated. One end of the armature coil is usually connected to the armature shaft, or spindle, and the other to an insulated pin or ring. The collecting brushes are arranged to rub against the shaft and the insulated pin or ring, respectively. The shaft is sometimes run directly through the core, but on some modern magnetos the shaft is in two parts, each bolted to an end plate, which is attached to end projections on the armature core, leaving between the plate and the body of the core a space for wire.

Fig. 23 (*b*) shows such a core completely wound. The coil is wound solid, as shown at *b* in the sectional end view, Fig. 23 (*c*), instead of being separated into two parts, as would be necessary if the shaft extended through.

Fig. 23 (*c*) also shows, by the dotted lines, how the magnetic flux passes through the core and the coil when in the position shown. When the armature has turned one-fourth revolution, so that the iron projections *c* are opposite the neutral spaces between the poles, almost no magnetism passes through the coil. As the core rotates, it thus cuts the magnetism in and out and generates an alternating current.

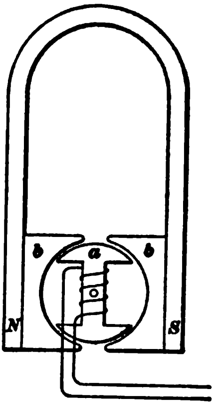

FIG. 22

37. In magneto generators for automobile use, the slip ring is frequently eliminated by making the spindle hollow and carrying one of the armature wires out through the hole to an insulated contact piece at the end of the spindle. This contact piece may be only an insulated pin against whose ends the part substituted for the brush bears. In some cases, the brush that would bear against the spindle is not used, but the metallic contact between the spindle and its bearings is depended on for making electric connection between the spindle and the frame of the generator. This arrangement is not always satisfactory, however, because the film of oil between the spindle and its bearing is sometimes thick enough to act as an insulator and thus prevent electric connection between them.

38. In Fig. 23 (*b*), one end of the coil *a* is carried out through the hollow spindle *b* to the insulated piece *c*, and the other end is fastened to the core, or head-piece, by the screw *d*. The sharp edges of the parts *e* and *f* throw off the oil as the armature rotates and cause it to drip off when the armature is not rotating, so that the oil will not get into the armature winding. In Fig. 23 (*d*), one end of the armature winding *a* is connected to the insulated slip ring *b*, and the other end is connected to the armature core and spindle. The deep flange *c* and the shallow flange *d* prevent oil from the bearings

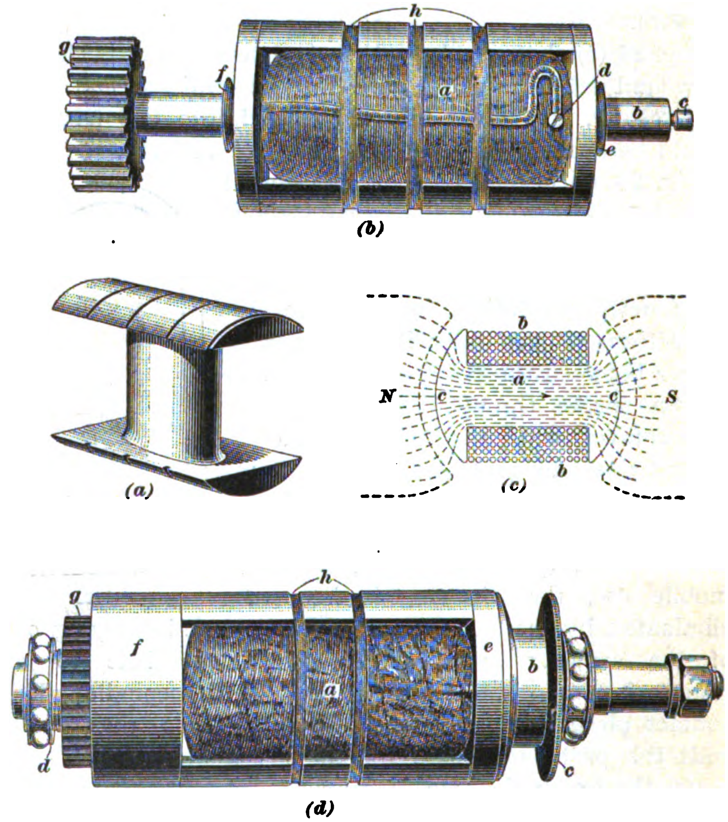

FIG. 23

from reaching the winding, and the flange *c* also insulates the slip ring *b* from the ball bearing. The end pieces *e* and *f* are made of some non-magnetic material, generally brass, bronze, or aluminum alloy, so that they will not form a magnetic path between the magnetic poles and cause the magnetic flux to deviate from the desired path through the core around which the coil is wound. The spindle is usually made of steel. The non-magnetic heads magnetically insulate the spindles from the armature core. The circumferential bands *h* around the armature hold the wires of the coil in place, so that they will not fly outwards when the armature is rotating. They also are made of non-magnetic material. Each armature shows at the left-hand end a spur gear *g* by which it is driven. The bearings in Fig. 23 (*b*) are of the plain cylindrical type, with the spindle forming the journal, which has sliding contact with its bearings; the armature shown in Fig. 23 (*d*), however, has ball bearings.

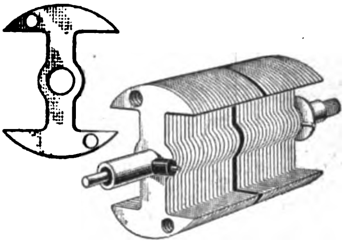
Fig. 24

39. When the armature core is made of one solid piece of wrought iron or soft steel, electric currents of considerable magnitude are induced in it as it rotates between the magnet poles. These currents flow from one part of the core to another part, and on account of the nature of their flow are called **eddy currents.** They are objectionable on account of heating the armature and reducing the electric pressure that is induced in the armature coil. In order to eliminate the eddy currents as far as possible, the core is made up of thin sheet-metal punchings or stampings, as shown in Fig. 24. The metal sheets from which the pieces are punched or stamped are about the thickness of thin stovepipe iron or even thinner. Iron and steel of the softest and purest quality are used in the best construction. The stampings are placed side by side to build up the core. They are sometimes separated from each other by thin sheets of paper, so as not to come into close metallic contact and thus form electric connection. In other cases, only the black oxide of iron on the surface is depended on to insulate the stampings from each other electrically. The set of stampings is compressed together and fastened by bolts and rivets.

40. Armature Winding.—The electric pressure, or voltage, of the elementary generator shown in Fig. 21 can be doubled by giving the armature winding two turns around the core instead of one, if the two turns are in series. The turns are in series when, in winding the coil, the wire is wrapped twice around the core instead of once, and the two ends are connected as before. The series-winding is the same as wrapping a string twice around a package. If the number of turns in series is increased still more, the voltage that the armature will develop will be correspondingly increased, provided all other conditions remain the same as before. In actual practice, for this form of winding, the voltage of the generator is nearly proportional to the number of turns of winding on the armature core. An armature wound as in Fig. 23 (*b*) and (*d*) is called a **shuttle-wound armature.**

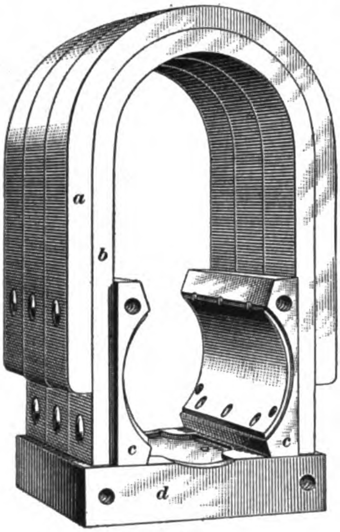

FIG. 25

FIELD MAGNETS

41. Fig. 25 shows the magnets, or field, used with armatures of the form illustrated in Fig. 23 (*b*). The *field* is made up of three magnets placed side by side. Each magnet is double, or compound, consisting of one magnet *a* fitted over another *b*. Iron or soft-steel pole pieces *c* bored to suit the armature are attached to the magnets. The magnets are fastened firmly to a non-magnetic plate *d* that forms the base of the generator. This base may be of brass, wood, vulcanized wood fiber, or some other suitable material.

The thinner bar steel that can be used by making each magnet in two component parts can be given a greater degree of hardness than the thicker material that would be required if each magnet were made in one piece. The harder the material, the better it retains its magnetism. Also, the thinner bar of hard steel is more easily magnetized than the thicker bar. On the whole, a stronger magnetic field and more permanent magnets are obtained by this method of making up the field.

LOW-TENSION MAGNETOS

42. When a magneto generator delivers a current of low voltage, such as is used for contact ignition or for the primary winding of a spark coil, it is generally known as a **low-tension magneto.** Under this classification, therefore, any magneto with which it is necessary to use a separate vibrator or non-vibrator coil to produce a high-tension current is of the low-tension type.

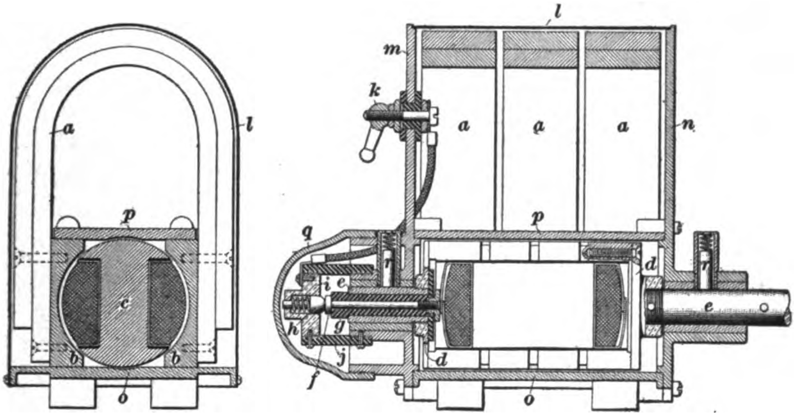

FIG. 26

Inasmuch as the basic principle underlying the operation of low-tension magnetos is the same for all types, regardless of variation in details of construction and application of principle, no attempt will be made to describe in detail the special characteristics of the many domestic and foreign magneto-electric generators at present in use. A description of some of the common types of machines will suffice to give a general idea of the characteristics of all.

One type of low-tension alternating-current magneto is shown in cross-section and longitudinal section in Fig. 26. For a four-cylinder four-cycle engine, it is driven by gearing at the speed of the engine, the gears being set so that the range of the spark timer coincides with the effective range of the magneto current. The armature positions determining the latter are marked on the magneto, and it is unnecessary to change the angular relation of the armature to the engine crank-shaft when the spark is advanced or retarded. The principal features of construction are as follows:

The permanent magnets *a* have pole pieces *b* fastened to them by screws. The armature core *c* is wound with double silk-covered magneto wire, and the ends of the core are screwed to hard brass disks *d*, into which the two shaft sections *e* are screwed and riveted. The object of this construction is to make a neater and more compact winding of the armature than would be possible if the shaft passed through the core. One of the terminals of the armature winding is insulated, and the other is grounded on the frame of the generator. The insulated terminal of the coil is connected to a hardened-steel bolt *f*, insulated by a mica bushing *g* through the armature shaft, and the current is taken off by a hardened-steel contact pin *h* in the brass mounting *i*, carried by the hard-rubber tube *j* screwed over the end of the bearing. From *i*, a flexible connector leads to the binding post *k*. The entire magneto is provided with an aluminum housing, comprising a sheet cover *l* and cast end plates *m* and *n*, together with top and bottom plates *o* and *p*, and a cap *q* to exclude dust. The shaft is lubricated by oilers *r*.

43. A magneto of this type can be used either for low-tension contact ignition or for supplying current to a coil of the transformer, or non-vibrator, type for high-tension ignition. For low-tension ignition, no kick coil is required, because the magneto armature has sufficient self-induction to produce a considerable spark when the contact points separate inside the engine cylinder. For high-tension ignition, this magneto can be used with a suitable timer and either a transformer type of coil without a vibrator for interrupting the primary current, or with an induction coil having a magnetically operated vibrator for interrupting the current. The armature winding must be suited to the service required. The binding post *k* is used for connecting the magneto to the other apparatus of the ignition system.

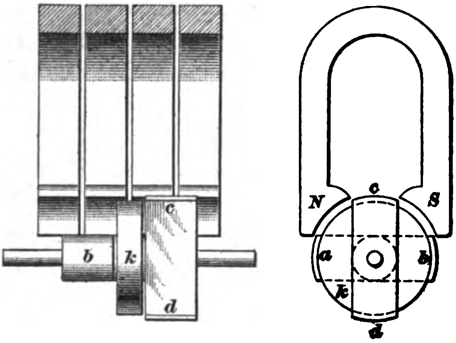

FIG. 27

44. Inductor Type of Magneto.—An alternating-current magneto of the inductor type, in which the armature winding is stationary instead of rotative with the mechanically driven rotor, or armature core, is shown diagrammatically in side and end elevations in Fig. 27. The rotor, or armature core, as shown in Fig. 28, consists of two arms *a b* and *c d*, made up of thin sheet-iron punchings, placed at right angles to each other; they are connected by a short cylindrical neck whose axis is coincident with that of the spindle on which the rotor turns when in place.

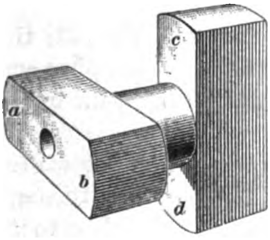

FIG. 28

The position of the rotor in relation to the magnetic poles is shown in Fig. 27. The coil *k* is placed around the cylindrical portion of the rotor. The coil is wound spirally, like a clock spring. The wire used is a flat ribbon of copper, resembling a clock spring in cross-section, and is, of course, insulated. This spiral armature coil is held stationary with regard to the magnets. Its terminals are led out to stationary binding posts or other suitable devices for making connection with an external circuit.

45. The action of the magneto depends on varying the number of lines of magnetic force through the armature coil. The manner in which this is accomplished can be seen by referring to Fig. 29. In the position shown in Fig. 27, the only magnetic flux that takes place is through the upper end of the arm *c* of the rotor. There is no flux through the cylindrical portion that forms the core of the winding.

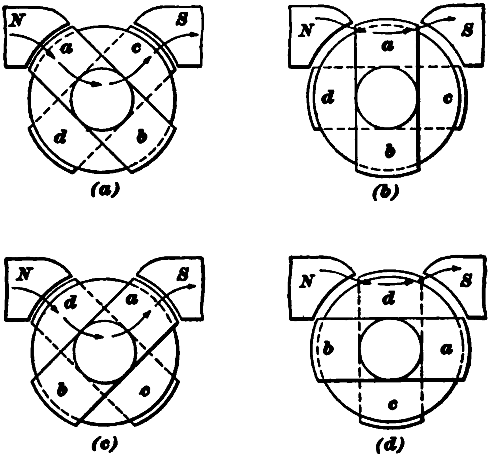

(a) (b)
(c) (d)

FIG. 29

When the rotor has moved to the position shown in Fig. 29 (*a*), the magnetic flux is from *N* to *a*, then through the cylindrical neck to the arm *c* and out through *c* to *S*. The flux is from the front toward the back end of the rotor when it is in the position (*a*). With the rotor in the position (*b*), all the magnetic flux that takes place is from *N* through the upper end of *a* to *S*. On reaching position (*c*), the flux is from N through d to the cylindrical neck, then up toward the front arm a and through a to S. In this case, the flux through the cylindrical neck is from the rear bar $c\,d$ toward the front bar $a\,b$, instead of from the front bar toward the rear one, as in (a). On reaching its position (d), the flux through the cylindrical neck has again entirely ceased.

It will be seen that while the rotor has moved through one-half revolution from the position shown by Fig. 27, to the position shown at (d), in Fig. 29, the magnetic flux through the center of the core of the winding k has been twice raised from zero to the maximum value and dropped down to zero again. Therefore, for a complete revolution of the rotor there are four maximum values of magnetic flux. There are also four times at which the electric current reaches its maximum in the stationary winding during one revolution of the rotor.

46. What is known as the **K-W magneto** is constructed on the principle just described. To facilitate assembling and separating the parts, one of the rotor bars is made removable. The machine is made to run in either direction and in any position, the oil cups being arranged accordingly. For jump-spark ignition, it should be run at a speed at least three times that of the engine, so that under normal working conditions it will have a speed of from 2,500 to 3,500 revolutions per minute. With these speed ratios, sufficient current is generated on a quarter turn of the starting crank to permit of starting the engine, thus obviating the use of batteries for starting purposes. Because of the *impedance*, or inductive resistance, of the coil and circuit, the K-W magneto is self-regulating, so that, while at low speed, it will generate enough current to start the engine with a quarter turn of the starting crank; neither it nor the coil will

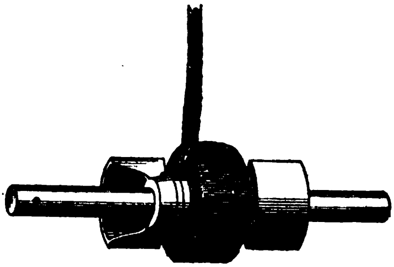

FIG. 30

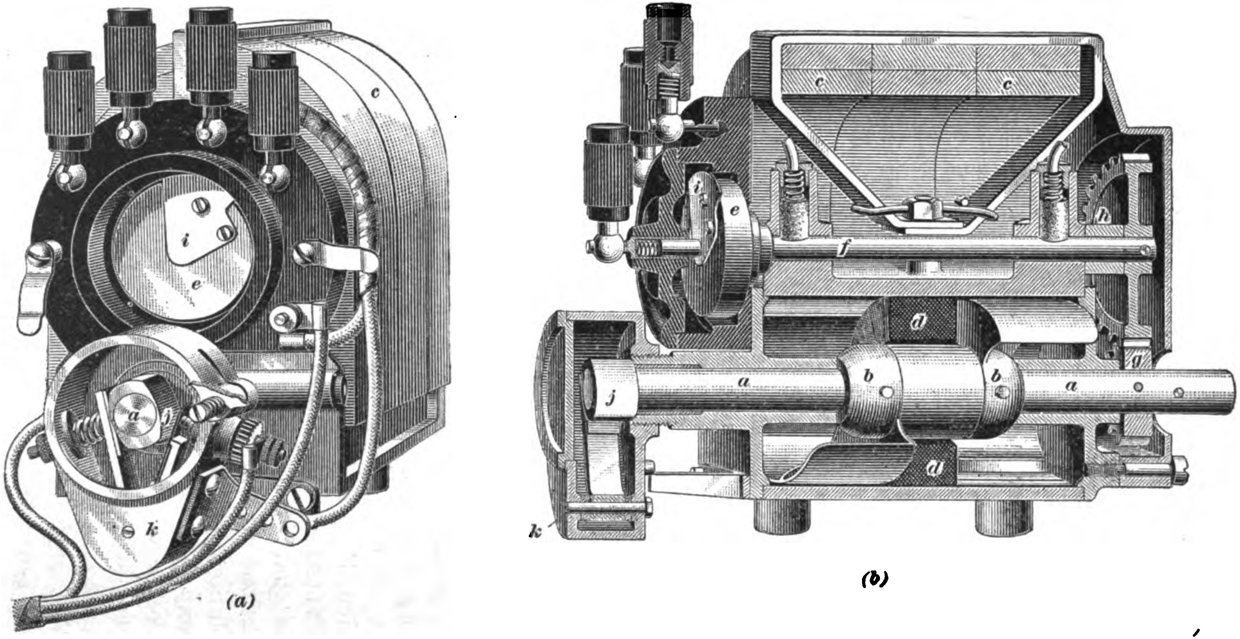

(a)

(b)

Fig. 31

be injured when the engine is speeded up, no matter how fast it may be run. Four powerful sine waves of alternating current are produced per revolution of the magneto, giving sufficient power to operate the vibrator of the coil the instant that the circuit is closed by the timer.

47. The stationary armature winding and the soft-iron rotor of the **Remy magneto,** which operates on the principle just described, is shown in Fig. 30. In this design, the rotor is placed between the magnetic poles in a manner similar to that of the shuttle-wound armature already described. There is, of course, only one complete electric cycle per revolution, with its two maximum values of current.

Current is generated by means of a solid steel shaft *a*, Fig. 31 (*b*), on which are mounted two steel inductor wings *b* that revolve between the pole pieces of the three permanent double **U** magnets *c*. Between the inductor wings is placed a stationary winding or coil *d* of coarse magnet wire within which the current is generated. From this winding the current flows to the transformer, or non-vibrator, coil on the dashboard and thence back to the hard-rubber distributor *e* on the face of the magneto. Just above the steel inductor shaft *a* is the distributor shaft *f*, which is driven by the inductor shaft through the pinion *g* and gear *h*. On the extreme end of the distributor shaft *f* is a fan-shaped brass segment *i*, Fig. 31 (*a*), that receives the high-tension current from the coil through the high-tension cable connected thereto. This segment revolves, passing the terminals of the wires leading to the spark plugs.

The circuit-breaking mechanism is a double-lobed cam *j* located on the end of the inductor shaft. The inductor shaft travels at crank-shaft speed, and the double cam interrupts the circuit twice, therefore making two sparks for every revolution of a four-cycle four-cylinder engine. The distributor shaft travels just half as fast as the inductor shaft; therefore, there is one spark for every quarter turn of the distributor shaft, or one spark as the brass segment passes each terminal of the four wires found on a four-cylinder engine. In a six-cylinder engine, the magneto is geared to run half again as fast as the crank-shaft. With relation to the movement of the pistons the timing is thus fixed mechanically, a powerful, hot spark being produced in the cylinder under compression at exactly the right instant, assuring maximum engine power. The spark is advanced or retarded by rocking the circuit-breaking cam housing *k* from right to left, a timing range of 60° being provided.

As dry batteries may be wired through the transformer coil, one type of dual ignition can be had with a single set of spark plugs. When batteries are used, the engine may be started on the spark without cranking, a push button being provided on the coil, so that by merely pushing it inwards a hot spark is delivered in the cylinder under compression.

LOW-TENSION MAGNETO-IGNITION SYSTEMS

CLASSIFICATION AND ARRANGEMENT

48. There are several systems or methods of utilizing the low-tension current primarily generated by a magneto. The following are some of the principal ways of applying the current generated in the low-tension winding of the magneto armature, a condenser always being used to aid in producing sudden variations of the primary current:

1. Interrupted primary current.
2. Short-circuited primary current.
3. Interrupted short circuit of primary current.
4. Condenser charge-and-discharge system.

49. Interrupted Primary Magneto Current.—One of the fundamental methods of applying the current from a magneto for jump-spark ignition is shown in Fig. 32. The armature *a* of the magneto is wound with only one coil of several turns. One end of the winding *b* is connected to the frame of the machine, and the other end is led through the hand switch *c* to the primary terminal *d* of the spark coil.

The primary-secondary terminal *e* of the spark coil is connected to the insulated stationary contact piece *f* of the timer. The arm *g* of the timer is connected to the frame of the machine at the hinged end. The rotor *h* of the timer is shown in the form of a two-lobed cam. The lobes of the cam lift the arm *g* to break the primary circuit at the instant ignition is required. One side of the condenser *i* is connected to the wire joining *e* to the timer, and the other side is connected to the frame, so that it is in parallel with the break in the circuit made as the timer contacts separate.

The discharge of the condenser passes through the transformer primary, the switch *c*, the magneto armature winding *b*, and thence to the frame and the other side of the condenser. The spark plug *j* is connected to the high-tension terminal *k* of the transformer coil in the usual manner. If the timer closes the circuit when the armature has made about a quarter revolution from the position shown, the increase of current in the transformer coil will be gradual compared with its cessation, and no spark will be formed at the time of closing the circuit.

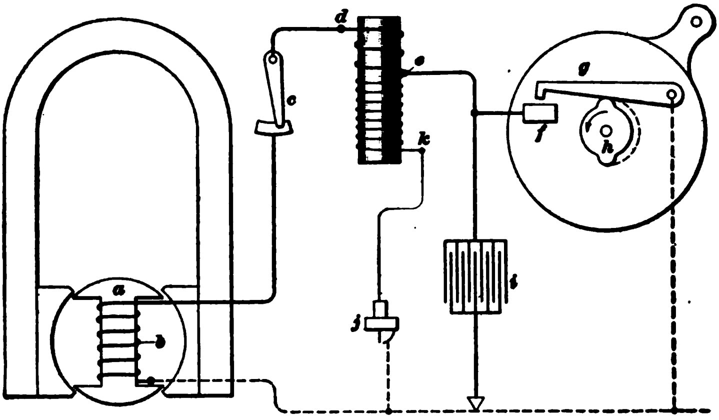

FIG. 32

50. If both the armature and the two-lobed timer rotate at the same speed, the system will give a spark every half revolution; that is, of course, two sparks every revolution. When the speed is the same as that of the crank-shaft of a four-cylinder, four-cycle, single-acting engine, the spark will be produced with the necessary frequency for the four spark plugs.

A high-tension distributor is, of course, required when there is only one transformer coil and more than one engine cylinder.

If the cam is filled in on one side, as indicated by the dotted line, there will be only one spark produced every revolution. If a cam filled in on one side, as just mentioned, rotates at half the speed of the magneto armature, there will be a spark produced every second revolution of the armature. With four timers of the latter nature, each breaking the circuit every two revolutions of the armature, and four corresponding individual transformers, the spark at the plugs can be produced with the required frequency for four spark plugs in a four-cylinder four-cycle engine when the magneto armature and engine crank-shaft rotate at the same speed.

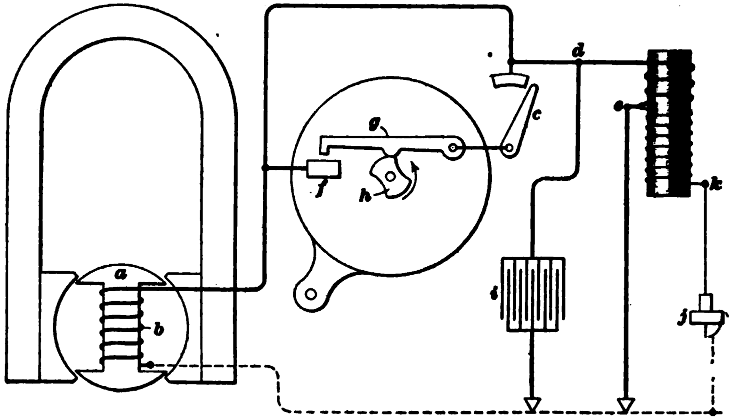

FIG. 33

The timer cam *h* can be fastened rigidly to the spindle of the magneto without insulation, and the contact arm *g* of the timer can be rotatively mounted on the part electrically connected with the spindle. As shown, the arm *g* is electrically connected to the frame of the machine, but the contact piece *f* which can be carried on the same part as *g*, mounted concentric with the rotor *h*, must be insulated. The timer can be rocked in the usual manner for varying the time of ignition.

51. Short-Circuited Primary Magneto Current. With the arrangement shown in Fig. 33, all the armature current passes through the primary winding of the transformer when the arm *g* of the timer is not in contact with its insulated contact piece *f*. The rotor *h* of the timer brings the arm *g* into contact with *f* at the instant that a spark is to be formed for ignition. The closed timer thus short-circuits the transformer by furnishing another path of less resistance for the current of the magneto to travel through. The new path is through the armature of the magneto to the contact piece *f*, and then through *g* to the frame of the machine and the opposite end of the armature winding. This latter circuit offers far less resistance than the circuit through the transformer; nearly all the current therefore travels through the timer on the short circuit when the timer is closed. The sudden drop of current in the transformer primary at the instant that the timer closes the circuit induces a spark at the plug.

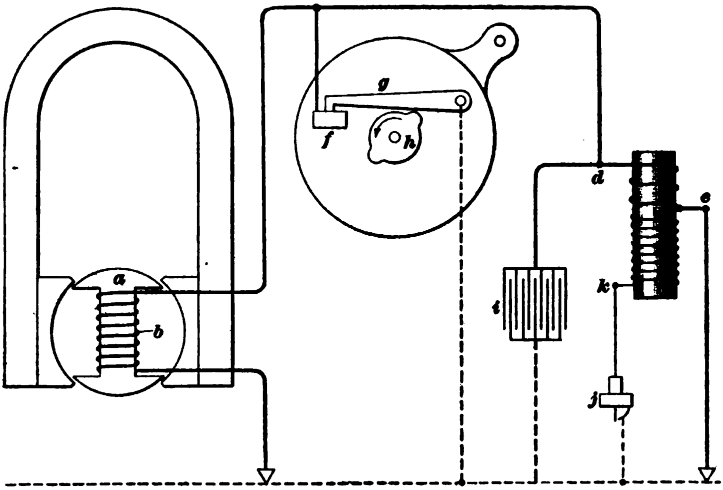

Fig. 34

The condenser acts in practically the same manner as indicated in the preceding examples, but it can be omitted without great injury to the contact points of the timer or great modification of the strength of the spark.

The hand switch *c* is kept open during the operation of the system. In order to stop sparking, the hand switch is closed. The magneto armature is then practically short-circuited. The armature of the magneto is wound and otherwise so constructed that it will run on short circuit without injury to itself or other parts of the apparatus.

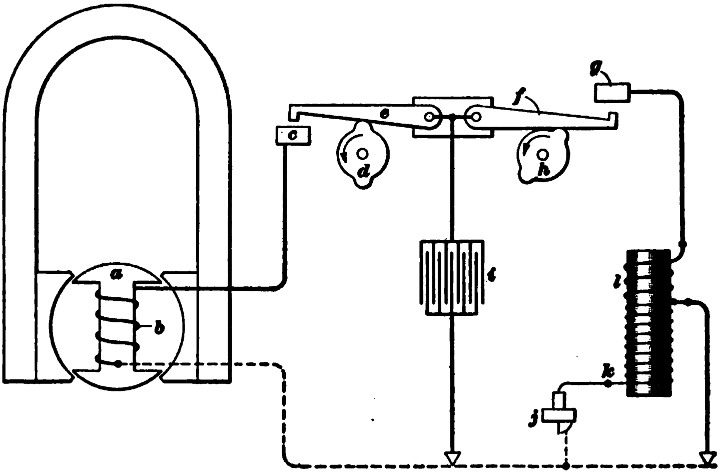

Fig. 35

52. Interrupted Short Circuit of Primary Magneto Current.—An ignition system depending for its operation on an interrupted short circuit of the primary magneto current is shown in Fig. 34. In this figure the same reference letters that are used in Fig. 33 have been applied to similar parts. The contact points of the timer are left together until the primary current of the armature attains its maximum value. On account of the low resistance of the short circuit through the timer, nearly all the primary current passes through it. Only a small amount of the current flows by way of the path through the transformer, because the latter has a far higher resistance in its primary winding than that of the short circuit through the timer.

When the short circuit is broken by the mechanical action of the timer, there is a sudden increase of current through the primary winding of the transformer. This sudden increase acts in the usual manner to induce a high tension in the secondary coil, so that a spark will jump at the plug. The condenser must, of course, be correctly proportioned in order to obtain good results.

53. Condenser Charge-and-Discharge System. Another system of applying low-tension magneto current for jump-spark ignition is illustrated diagrammatically in Fig. 35. In this system, the electricity generated by the magneto is first stored in a condenser *i* without passing any current through the transformer; then, after the primary circuit of the magneto is open, the condenser is discharged through the primary coil of the transformer at the instant a spark is desired.

The magneto winding is connected to the insulated contact piece *c* of the primary circuit-breaker. The rotor *d* lifts the circuit-breaker arm *e* at the time the magneto is giving its full, or nearly full, current strength. The condenser *i* is thus electrically *charged*. The timer arm *f* is not in contact with the insulated contact piece *g* during the time of charging the condenser. The rotor *h* lifts the timer arm *f* to make contact with *g* and thus closes the condenser circuit through the primary winding *l* of the transformer, whose high-tension terminal is at *k*. At the instant contact is made at *g*, the condenser discharges its current through the transformer, and a spark is induced at the spark plug *j*. By this arrangement, the magneto circuit is connected to the condenser, and the latter is charged by the magneto always at the same time without regard to whether the spark at the plug is made early or late by rocking the timer. The electric circuit from the magneto is never closed so as to allow a circulating flow of electricity.

As mentioned, the timer can be so mounted as to admit of rocking it for varying the time of ignition. The circuit-breaker can be mounted stationary, so as to be independent of the rocking of the timer.

DUAL IGNITION SYSTEMS

54. A low-tension magneto of the condenser charge-and-discharge type for jump-spark ignition is illustrated in Fig. 36. The armature has a laminated core *a* and rotates on ball bearings. On the armature shaft is mounted the regular mechanically operated timer *b* of the interrupter type, which has a two-lobed cam for making and breaking the primary circuit.

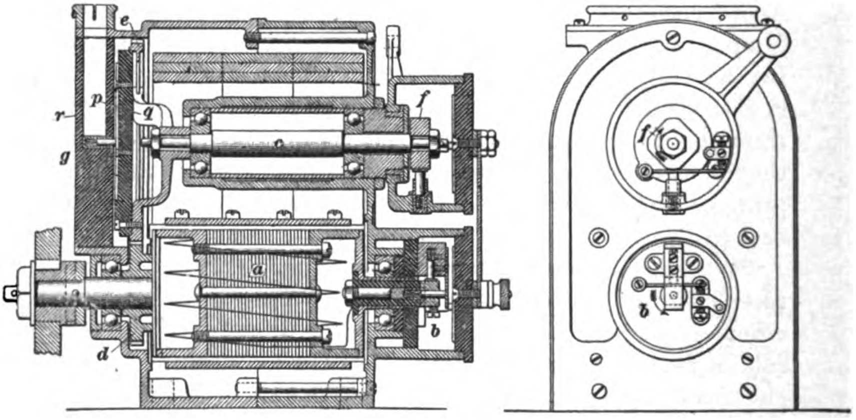

FIG. 36

A second shaft *c* is run by the pinion and gear *d* and *e* at one-half the speed of the armature, and carries a four-lobed primary contact maker *f* and also the secondary current distributor *g*. Fig. 37 shows the wiring connections. One end of the armature winding is grounded on the core, as usual, and the other is connected to the mechanically operated interrupter *b*, and through the wire *h* to the primary of the induction coil *i*. The other terminal of the primary is connected to the coil vibrator and also to the condenser *j*. A switch *k* has its blade connected with the other condenser terminal, and has the three contacts connected, respectively, to the vibrator *l* and the positive and negative terminals of the battery *m*, as shown. The positive terminal of the battery is grounded.

55. When the switch is in the position shown by the dotted lines, and the circuit is closed by the primary interrupter *b*, a charge of electricity passes through the wire *h* and primary winding of the coil *i* into the condenser *j*. As soon as the condenser is charged, which takes but an instant, no further current can flow, because there is no closed circuit connected to the armature winding. The contact is then broken, leaving the condenser charged, and at the proper moment for the spark a contact is made by the timer *f*, thus grounding the wire *h* and permitting the condenser to discharge itself through the primary winding of the coil *i*, the flow being now in the opposite direction to that of the momentary charging current. The discharge of the condenser is so sudden as to induce a very high momentary voltage in the secondary winding of the coil.

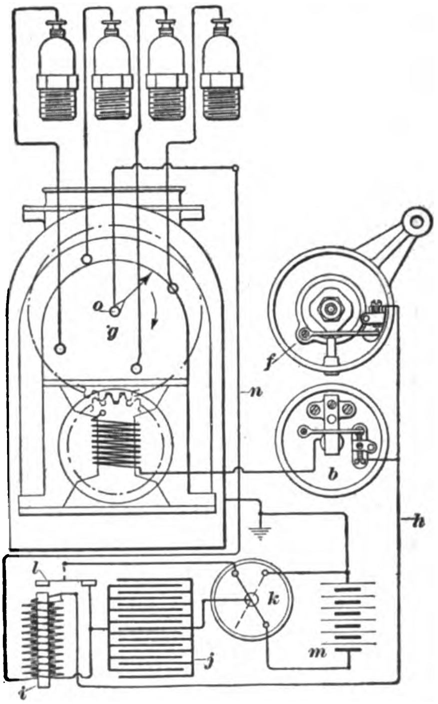

FIG. 37

56. As one end of the secondary winding of the induction coil is connected to the primary winding, the secondary winding is grounded while the timer *f* is making contact. The other end of the secondary winding is connected by the cable *n* to the central terminal *o* of the high-tension distributor *g*, whose arm *p*, Fig. 36, is secured to the rotating hard-rubber disk *q* attached to the shaft *c*. Four fixed terminals, mounted in the same hard-rubber piece *r* that holds the central terminal, distribute the current to the spark plugs. As the end of the arm *p* is widened, no advance is required in the distributor, and hence the timer *f*, Fig. 37, is the only member moved to change the spark time, the condenser simply remaining charged, between the moments of contact, by *b* and *f*, respectively.

As already stated, the battery furnishes current for starting, the switch *k* then being turned to the position shown in full lines in the diagram. The magneto is thereby disconnected, and the battery current goes through the engine frame, contact maker *f*, wire *h*, primary winding of the coil, vibrator *l*, and the switch. The current can also go by way of the armature winding and interrupter *b*; but, if the vibrator is adjusted for the current reaching the coil by the more direct route, it will not respond to the weaker current. When the engine reaches normal speed, the switch is thrown over by the operator. The switch is of special design, and is very highly insulated to protect the operator from shocks. It is claimed that this magneto will produce a 3-inch spark in the open air at 600 revolutions per minute, and a ⅜-inch spark at 50 revolutions per minute. As only a single spark is produced, it can be timed with perfect accuracy.

As illustrated, the magneto is suitable for a four-cylinder four-cycle engine when its armature rotates at the same speed as the crank-shaft of the engine. For a six-cylinder four-cycle engine, the armature must make three revolutions for every two revolutions of the engine crank-shaft.

HIGH-TENSION MAGNETOS

57. With reference to electric ignition, a **high-tension magneto,** strictly speaking, is a magneto that delivers electric current of sufficiently high voltage, or tension, to jump the gap of a jump-spark plug under the usual conditions of operation, the high-tension current being produced and delivered without using any auxiliary coils or wiring separate from the magneto. The high-tension magneto performs all the functions of an electric generator, a timer, a spark coil, and, for the usual case of four or more cylinders, a distributor. It is really the embodiment of all these individual parts in a single piece of apparatus.

MAGNETO WITH SINGLE ARMATURE WINDING

58. The **Hess-Bright high-tension magneto,** shown in sectional elevation in Fig. 38, operates on an interrupted short-circuit system substantially the same as that described in Art. 52 in connection with Fig. 34. The magneto has a rotary armature with a single winding, generating a low-tension current that passes through the primary winding of a transformer that forms an integral part of the magneto. The primary current generated in the armature *a* flows through the insulated primary terminal *b* to the bridge *c* by means of an interposed carbon button *d* that is held in easy contact with the end of terminal *b* by a light stirrup spring. One of the bolts *e* supporting the bridge *c* delivers the current to branching circuits in the large, hard-rubber block *f*. With the interrupter closed, current flows through the fixed platinum-ended terminal *g* to the platinum-ended interrupter lever *h*, to the magneto framing, and then to the ground. With the interrupter open, the primary current is conveyed to the transformer spool *i* through spool terminal *j*. This spool is encased in hard rubber and is further protected by its location between the permanent magnets. The primary current leaves the transformer by way of terminal *k*

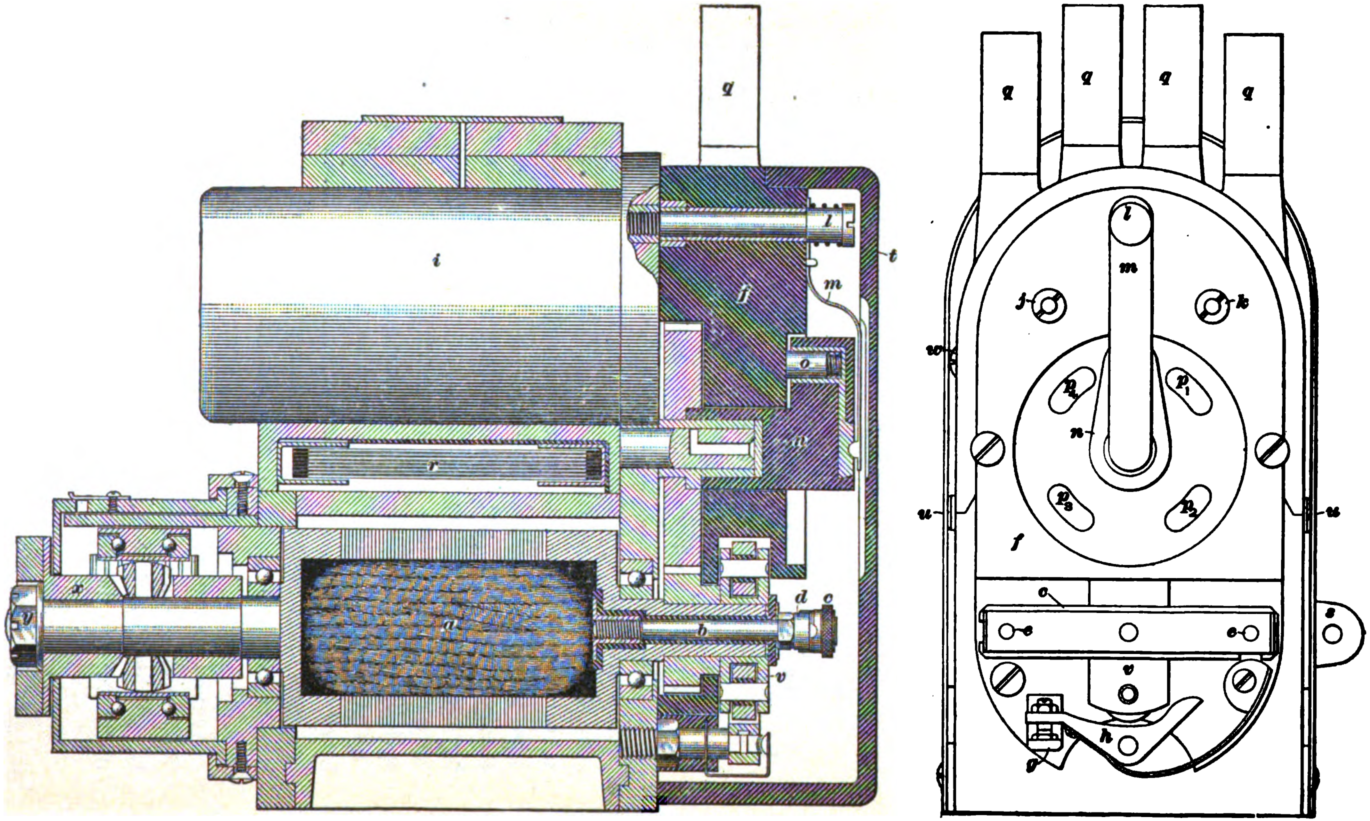

FIG. 38

which is in circuit with the ground through the frame of the magneto. The terminal screws *j* and *k* are secured by double locknuts.

The secondary, or high-tension, current leaves the transformer by way of screw terminal *l*, and is carried by the spring blade *m* to the distributor *n*, whose carbon brush *o* delivers it in turn to the four terminal segments p_1, p_2, p_3, and p_4 that are sunk into the large hard-rubber block *f*; these segments are connnected electrically to the usual terminal plugs *q* to which the spark-plug cables are connected. The condenser *r* is located between the armature and the transformer spool. The lever *s* for timing the ignition projects from the side of the magneto near the rear, or engine, end. The distributor, interrupter, and various other front parts are enclosed by the large, solid hard-rubber cover *t*. Pushing the detent spring levers *u* to one side permits the removal of the cover and also uncovers the oil holes.

The interrupter *h* is operated by the roll carrier *v*, which raises the interrupter lever *h* twice in each armature revolution. The armature and timer are both mounted on ball bearings.

For cutting off the ignition current, a terminal screw *w*, electrically connected internally with the primary circuit, is provided in the side of the large hard-rubber block of the magneto. This terminal can be electrically connected to a switch, preferably of the push-button type, conveniently located. Closing the switch short-circuits the primary current and thus stops the formation of sparks at the spark plug.

A jaw clutch *x* is provided for driving the armature. This clutch has a number of teeth on its beveled inner end, so that by loosening the nut *y*, the clutch can be rotatively adjusted so as to bring the armature into the position of maximum primary current at the proper instant relative to the time a spark is to be produced.

The moving parts run in ball bearings that require little lubrication, for which provision is made by holes protected against the entrance of dust, thus insuring satisfactory service with little attention.

59. The general method of operation of the magneto in its application to a four-cylinder engine, as shown by the circuit diagram in Fig. 39, is as follows:

The primary current flowing from the winding on the armature *a* is offered two paths; the shorter through the interrupter *h* to ground and the longer through the primary of the transformer spool *i* to ground. A third path through the condenser *r* is apparently available, but the condenser will not permit the passage of current. The condenser merely absorbs a certain amount of current at the proper moment; that is, at the instant of opening the interrupter. The interrupter is closed the greater part of the time, allowing the primary current to take the short path that the interrupter offers. At the instant that the greatest current intensity exists in the armature the interrupter is opened mechanically, so that the primary current has no choice but to take the path through the primary of the transformer spool. A certain amount of current is at this instant also taken up by the condenser *r*. This sudden rush of current into the primary of the transformer spool induces a high-tension current in the

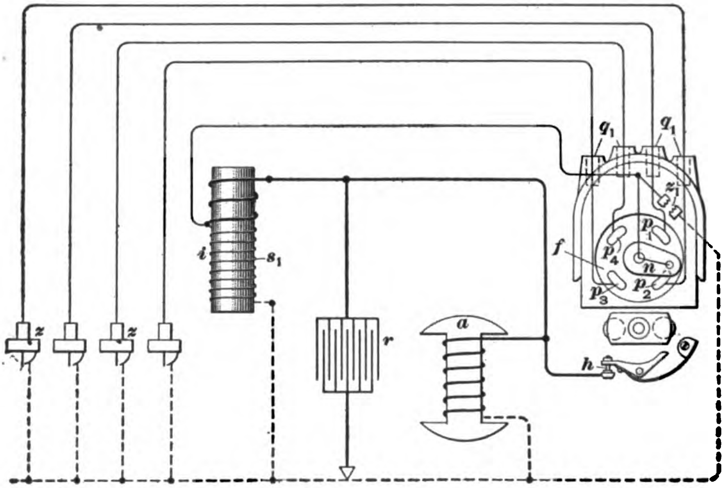

FIG. 39

secondary winding s_1 of the transformer. This high-tension current is capable of bridging the space between the terminals of the spark plug. The sharper the rush of current into the primary winding of the transformer the more easily will the necessary intensity of pressure for a jump spark be induced in the secondary winding s_1.

60. The high-tension current induced in the secondary winding is delivered to a distributor brush carrier n that rotates in the magneto at the same speed as the cam-shaft of the engine. This brush carrier slides over four metal segments p_1, p_2, p_3, and p_4 set flush into the face of a large hard-rubber block f. Each of these four segments connects with one of the terminal sockets that are connected by cable with the four spark plugs z. At the instant of interruption of the primary current, the distributor brush is in contact with one of the four metal segments and so completes the circuit to that spark plug connected with the segment.

Should the circuit between the terminal q_1 and its spark plug be broken, or the resistance of the spark plug be too great to permit a spark to jump, or should the discharge of the high-tension current from the transformer be hindered by any cause whatever, then the current might rise to an intensity sufficient to destroy the transformer. To avoid this, a safety spark gap z_1 is introduced. This allows the pressure to rise only to a certain maximum; above this maximum discharges take place across the safety gap. In this type of magneto the spark discharges across the safety gap are visible through a small glass window conveniently located in the top of the hard-rubber block.

MAGNETO WITH DOUBLE ARMATURE WINDING

61. What is popularly known as the **U. & H. high-tension magneto,** shown in sectional elevation in Fig. 40, has a rotary, double-wound armature of the shuttle type. The primary current is interrupted to induce a secondary high-tension current. The primary winding of the armature,

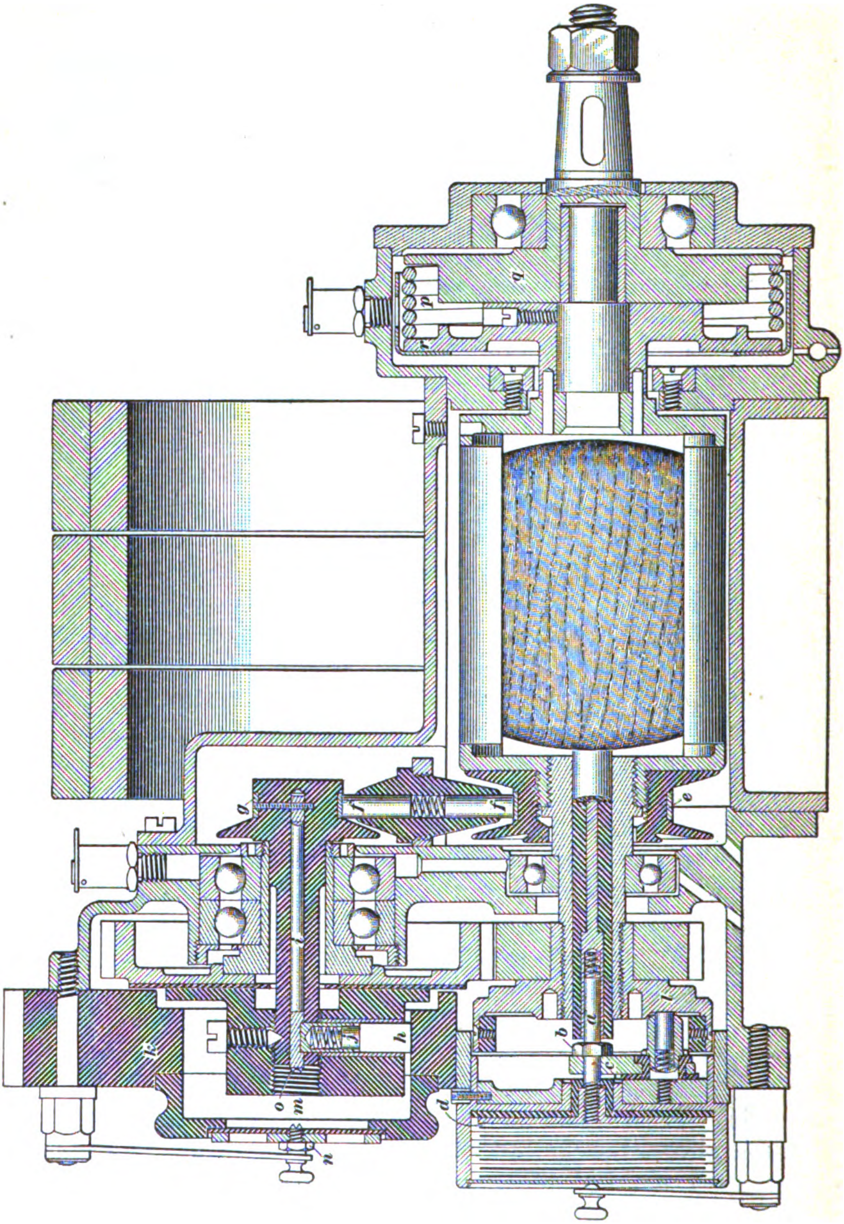

FIG. 40

which is the inner coil, consists of a few layers of coarse insulated wire, and the secondary winding consists of a great number of layers of very fine insulated wire. The primary current passes through only the timer and primary winding of the armature. The condenser is in parallel with the timer or interrupter. The secondary circuit comprises a slip ring connected to the secondary winding of the armature, a collector brush, a high-tension distributor, a spark plug, and both the secondary and primary windings of the armature. A safety spark gap is used on the high-tension circuit.

62. One end of the primary winding is grounded to the armature itself, while the other end is connected with the carbon brush *a*, which is carefully insulated from the armature shaft. Brush *a* bears against the interrupter block screw *b*, which in turn conducts the current to the interrupter block *c* and to the condenser plate *d*. From the interrupter block *c* the current is conducted to the interrupter lever. This lever is in metallic contact with the body of the magneto, and is therefore grounded, so that when the interrupter lever is in contact with the interrupter contact screw, the primary circuit is completed, and the primary winding of the armature is short-circuited.

63. The beginning of the secondary winding is connected to the end of the primary winding, being, in fact, a continuation of the primary winding. The end of the secondary winding is connected to the armature slip ring *e*, which is thoroughly insulated from the armature. From the armature slip ring the high-tension current is conducted, by means of the brushes *f* to the distributor slip ring *g* whence it is led to the distributor brush *h* by means of the distributor stem *i* and the distributor brush spring seat *j*. The distributor plate *k* is provided with as many brass distributor segments, evenly spaced around the distributor bore, as there are cylinders to be fired, and as the distributor brush is revolved, it comes into successive contact with the distributor segments. The distributor segments are in turn connected with the secondary terminals located at the top of the distributor plate, and of which there are also as many as there are cylinders to be fired. From the secondary terminals the high-tension current is conducted by cables to the spark plugs of the proper cylinders. The current, in leaping the gap of the spark plug, is conducted to the grounded end of the plug, from which place it returns to the grounded end of the primary winding, through the primary winding to the beginning of the secondary winding, thereby completing the secondary, or high-tension, circuit.

64. At the instant of the interruption of the primary circuit, a secondary, or high-tension, current is induced in the secondary winding. The intensity of the current induced in the secondary winding is nearly proportional to the intensity of the current generated in the primary winding; hence, the maximum secondary effects are produced when the primary current is interrupted at its maximum, or just as the armature passes from one pole to the other.

Owing to its rotation in the magnetic field, the high-tension winding generates a current in a manner similar to that of the low-tension winding, but this current is of far greater intensity than the primary current, owing to the difference in the windings. The tension of this current is not sufficient, however, to cause it to leap the gap of the spark plug, but at the instant of interruption of the primary current, the inductive effects are such as to raise the voltage or pressure of this current to a point that will enable it to leap the gap of the plugs. The electrical effects induced by the interruption of the primary current are of much shorter duration than those generated by the rotation of the secondary winding; therefore, the generated current has its voltage increased for but an almost infinitesimally short time. This temporary increase enables it to bridge the air gap of the plugs, and, once bridged, their resistance is reduced to such an extent that the current generated by rotation, and which lasts an appreciable time, can continue to cross. This results in a continuous flame across the spark plug gaps and on account of its high temperature and large volume, the flame has strong ignition qualities.

65. The interrupter, as shown in Fig. 41, consists of the interrupter plate *a* located in the interrupter housing *b*. Attached to the interrupter plate is a stud *c* on which is pivoted the interrupter lever *d*. The interrupter lever is provided with a platinum-pointed contact screw *e*, and is normally held by the flat spring *f* in contact with the platinum-pointed interrupter contact screw *g*. The interrupter contact screw is connected to the end of the primary winding.

Keyed to the interrupter end of the armature shaft, and rotating positively with the armature, is the interrupter-cam housing *l*, Fig. 40. Securely attached to the interrupter-cam housing is the interrupter cam, consisting of a ring of hard fiber, having on its inner face two projections, or cam faces.

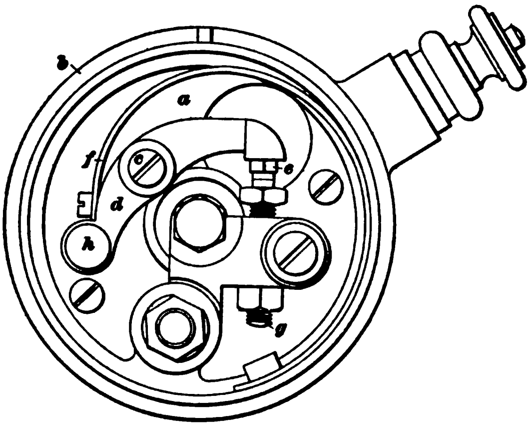

Fig. 41

The interrupter housing *b*, Fig. 41, is held in accurate alinement with the interrupter cam by the construction of the rear end plate, and as the armature revolves the projections of the interrupter cam are brought into contact with the interrupter cam pin *h*, causing a movement of the interrupter lever *d* sufficient to separate the contact screws *e* and *g* and thereby interrupt the primary circuit twice in every revolution. As the projections continue to revolve, the interrupter lever *d* instantly resumes its normal position, and completes the primary circuit.

66. The safety spark gap *m*, Fig. 40, is formed by bringing the distributor-cover screw *n* to within a certain distance, which is generally about $\frac{3}{8}$ inch, from the end of the distributor stem *o*. The distributor cover screw is grounded to the magneto, thereby providing a path for the high-tension current should the voltage become high enough to cause it to leap the safety spark gap. The user is cautioned against allowing the discharges to pass across the safety spark gap for any length of time, as it places the high-tension insulation under a continuous and abnormal stress.

67. A starting device is provided with this magneto. It is arranged for furnishing a current and spark strong enough to produce ignition in the cylinders even when the shaft that is driving the magneto is rotating at very low speed; that is, even though the rotary movement of the driving shaft is so slow as to be practically imperceptible. This is accomplished by the use of an automatic lock for the armature and a coiled spring *p*, Fig. 40, between and attached to the armature driver *q* and the driving flange *r* for driving the armature. When the armature driver is rotated slowly, the armature is locked, so as to prevent its rotation during part of a revolution of the shaft. The coiled spring is still further coiled against its resistance during the time the armature is locked and its driving shaft is rotating slowly. The armature is then automatically released and snapped forwards suddenly by the uncoiling of the spring. The movement of the armature secured in this manner is rapid enough to produce a spark in the cylinder under compression. The construction is such that the release and spark occur at the proper time for ignition when starting the engine by hand cranking. As soon as the speed is increased by an impulse in the engine cylinder, the device that temporarily locks the armature is thrown out of action and the armature rotates with its driving shaft.

MAGNETO WITH STATIONARY ARMATURE

68. The **Bosch high-tension magneto** has a stationary double-wound armature and a rotary magnetic screen of the form shown in Fig. 42. It is operated on the interrupted primary-current system. The armature *a* is stationary in the position shown, and it is enough smaller than the pole pieces *b* to permit a soft-iron segmental screen *c* to pass between them. The segmental screen pieces are mechanically mounted on non-magnetic heads, to which the spindle or the shaft is attached. The effect of this screen is to divert the lines of force at each eighth of a revolution, sending them alternately through the stem of the armature core and through the ends, as shown by the dotted arrows. This reverses the current four times in each revolution instead of twice, as is the case with the ordinary rotating shuttle-wound armature.

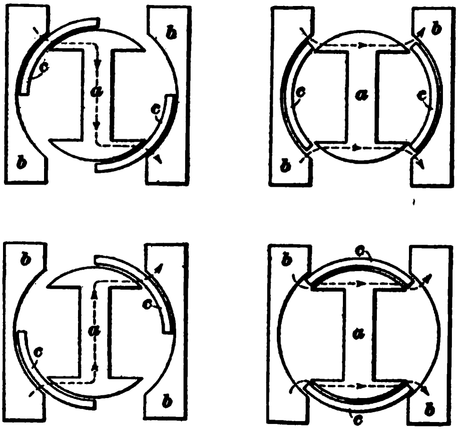

FIG. 42

69. Referring to Fig. 43, which is a sectional elevation of the magneto, and to Fig. 44, which is a conventional wiring or circuit diagram, it will be seen that one end of the primary winding is electrically connected to the armature core *a* and that the other end is connected to the brass tube *b*, which is mounted in the rear portion of the armature spindle and is insulated through it. The conducting bar *c* is firmly secured to this tube, the end of which extends beyond the spindle of the armature, and the primary current is conducted by means of the bar *c* to the contact piece *d*, which is provided with a platinum contact screw *e*. A contact piece in the upper end of the interrupter lever *f* is normally held against the screw *e* by action of the compressed spring *g*. A recessed disk *h* rotates with the magnetic shield *i*. The lobes on the disk *h* strike the lower end of the interrupter lever *f* and move it so as to break the contact between the lever and screw *e*. The interrupter lever is in electrical contact with the frame of the machine, and consequently with one end of the grounded primary winding. When the interrupter lever *f* is in contact with the screw *e*, the circuit is closed through the brass tube *b*, the conducting bar *c*, the contact screw *e*, the lever *f*, the frame of the machine, and the core of the armature. One of the terminals of the condenser *j* is connected to the contact piece *d*, and the other terminal is connected to the body of the machine. The condenser is thus connected in parallel with the contact breaker.

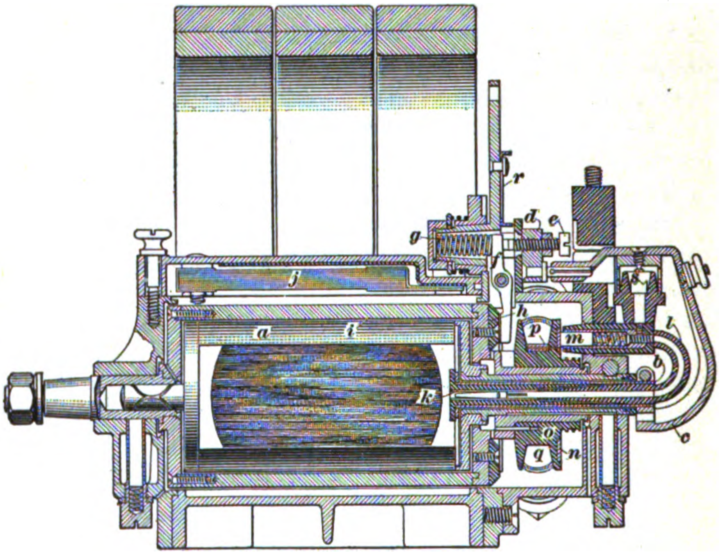

FIG. 43

70. The secondary winding is a continuation of the primary winding, their adjacent ends being soldered together. The other end of the secondary winding is connected to the small insulated tube *k*. The bent carbon holder *l* passes through the rear portion of the armature spindle; one end of the carbon holder is fitted into the insulated brass tube *k* by means of a small plug. The secondary current passes from the armature through the small plug and bent carbon holder to the carbon brush *m*, which conducts the current to the slip ring *n* of the high-tension distributor disk *o*. The distributor segment *p* may be considered as a distributor arm that comes successively into contact with the four high-tension carbon distributor terminals *q*. Each of the terminals *q* is connected to its own insulated tubular conductor in the terminal block. Above the terminal plate is a removable plug contact piece that carries four insulated plugs, each of which slips into contact with its tubular mate in the terminal block. The upper ends of the plug contact pieces are threaded so as to provide for making screw connections to the wires leading to the spark plugs.

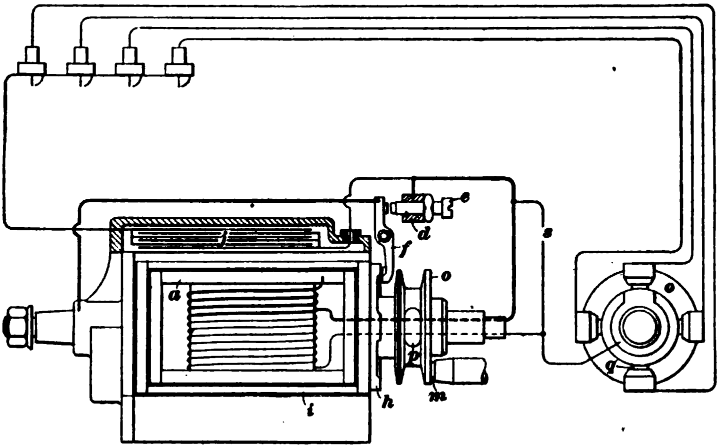

Fig. 44

71. The path of the high-tension current is through the secondary winding of the armature, the brass tube *k*, the bent carbon holder *l*, the distributor disk *o*, the current-collecting carbons in the carbon holder *q*, the conductors in the terminal block, the plug contacts. the wire leading to the ignition plug, the engine, and the frame of the machine to the armature core, and then through the primary winding to its junction with the secondary winding.

A safety spark gap *s* is provided between the low-tension conducting bar *c* and the high-tension carbon holder *l*. This allows a spark to jump between the extended ends of the primary winding when an excessive pressure occurs.

The speed of the rotor of the magneto, when supplying current to the four spark plugs of a four-cylinder four-cycle engine, is the same as that of the half-speed shaft, or cam-shaft, of the engine. This speed is only half as fast as the speed of the crank-shaft. For a two-cylinder four-cycle engine, the magneto rotor can be run at the same speed as for a four-cylinder engine of the same type, two of the high-tension terminals being short-circuited to the frame or body of the magneto. In a two-cycle four-cylinder engine, the magneto speed is the same as that of the crank-shaft.

72. The mechanical connection for rocking the timer by hand is made at the arm *r*, Fig. 43. The four-terminal timer shown is constructed to rock 30°, corresponding to 60° rotation of the crank-shaft in a four-cylinder four-cycle engine. The same angle values apply to a two-cylinder four-cycle engine using only two of the high-tension terminals. On a four-cylinder two-cycle engine, the angles of the timer rock and crank-shaft rotation are equal. When the magneto is provided with six high-tension terminals for a six-cylinder engine, instead of four terminals as illustrated, the magneto rotor speed is one and one-half times that of the cam-shaft for a four-cycle engine; the magneto rotor makes three revolutions during four revolutions of the engine crank-shaft. In the six-cylinder four-cycle engine, a 30° rock of the timer corresponds to 40° rotation of the crank-shaft.

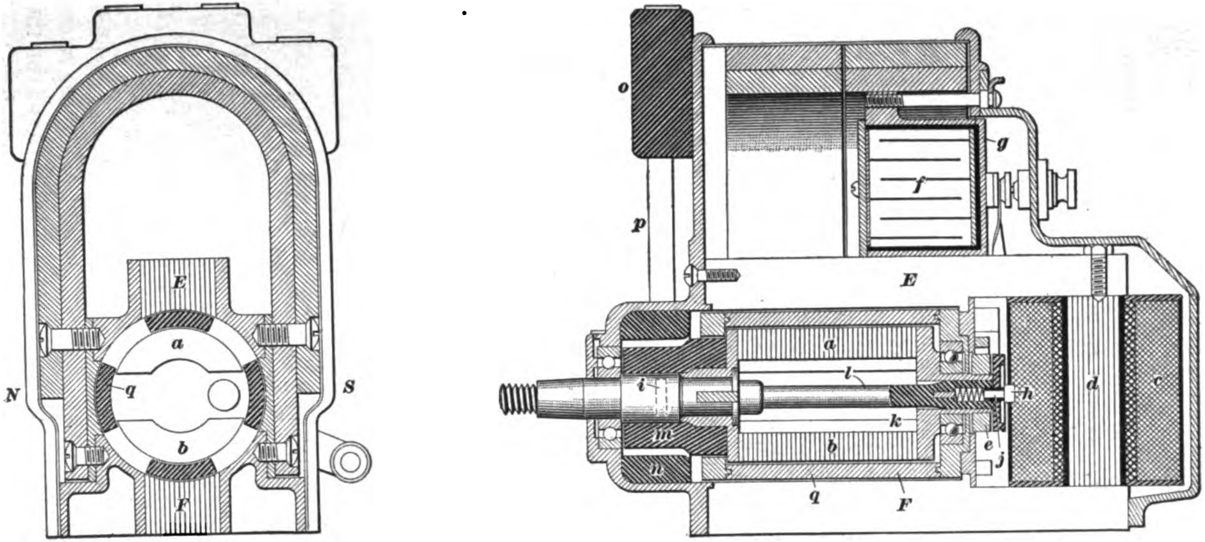

(a)

(b)

FIG. 45

MAGNETO WITH STATIONARY WINDING

73. The **Pittsfield high-tension magneto,** which has a stationary winding, is illustrated in Fig. 45 (*a*) and (*b*). The north and south pole pieces of the permanent magnet are at *N* and *S*. A magnet core made up of soft-iron stampings and placed at right angles to the permanent magnet has its laminated pole pieces *E* and *F* located as illustrated. A non-vibrating induction coil *c* is located on what corresponds to the crown of the magnet core. A rotor somewhat in the form of the magnetic screens referred to in Art. **68,** but thicker radially, lies in the bore between the magnet poles.

The laminated soft-iron rotor *a b* revolves in the magnetic field produced by the permanent magnets. The rotation of the armature *a b* in the magnetic field generates in the winding of coil *c* an alternating current that attains a maximum value four times during a complete revolution of the armature.

74. The primary winding, which is next to the core *d*, consists of a few turns of heavy wire; one end of this wire is connected to the body of the machine, and the other end is connected to a contact plate insulated with hard rubber. From this plate a wire makes a connection to the contact piece and platinum screw of the interrupter, the contact piece being insulated from the interrupter, which is in metallic connection with the field or ground. The current generated in the primary winding is therefore short-circuited as long as the contact piece and platinum screw of the interrupter are in contact with each other. The primary current is interrupted at the instant that the interrupter cam *e* moves the interrupter lever. A condenser *f*, protected by an aluminum housing *g*, is connected in parallel with the contact points of the interrupter.

75. The beginning of the secondary winding, which consists of many turns of fine wire, is connected to the end of the primary; the other end leads to contact button *h* of the coil. The secondary current is conducted from button *h* to the brass distributing segment *i* by means of the carbon brush and its spring *j*, to the conductor *k*, which is insulated by hard-rubber piece *l*, and to the distributor segment *i*. The segment *i* is insulated by the hard-rubber piece *m*. In the front end plate *n* are inserted four high-tension terminals. During a revolution of the rotor the segment *i* comes into successive contact with all the high-tension terminals. From the high-tension terminals the current is conducted to the socket inserts in the distributor plate *o* by means of connections *p*. From the socket inserts the high-tension current is conducted, by means of cables, to the spark plugs of the cylinders in the order required. The interrupter is screwed on one of the heads of the magnetic screen, and can be easily removed. The primary circuit is four times interrupted and short-circuited during each turn of the armature. This is accomplished by means of the four-lobed cam *e* rocking the interrupter lever. This cam revolves with the rotor of the magneto.

76. The four sections *q* of the magnetic screen are mounted on non-magnetic heads concentric with the rotor. The interrupter lever, together with the contiguous parts of the interrupter, is mounted on one of these heads. The time of ignition is varied by rocking the interrupter and the magnetic screen on which the interrupter is fastened. For this purpose the screen sleeve *q* is fitted with a lever to which connections leading to the spark control can be attached. The time adjustment is 30° at the timer, which corresponds to 60° at the engine crank-shaft of a four-cylinder four-cycle engine.

77. The action of the magneto depends on the alternate magnetizing and demagnetizing of the magnet core on which the coil *c* is mounted, thus inducing an electric current in the coil. This is accomplished by bridging the air gaps between the permanent magnet poles and the poles of the soft-iron laminated magnet core on which the transformer coil is mounted. The manner in which this occurs during the rotation of the rotor, can be seen by referring to Fig. 46.

In Fig. 46 (*a*) the position of the rotor is such that the few magnetic lines that pass through it go from *N* to *S* without passing into the soft-iron magnet. When the rotor has turned to the position shown in (*b*), the magnetism flows from the permanent pole *N* through the side *b* of the rotor to the pole *F* of the soft magnet core. From *F* the magnetism flows through the core of the transformer coil *c*, Fig. 45 (*b*), and on to the pole *E*. From *E* the path of the magnetic flux is through the side *a* of the rotor to the pole *S* of the permanent magnet. When the rotor reaches the position shown in (*c*) there is practically no magnetic flux through the induced magnet.

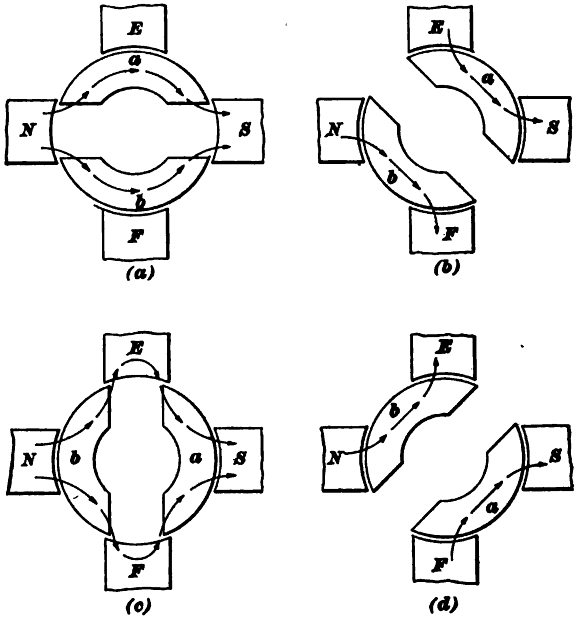

Fig. 46

Any flux that occurs follows the path indicated by the arrows. In the position of the rotor shown in (*d*), the magnetic flux, as indicated by the arrows, is through the soft magnet core and the transformer in a direction opposite that shown when the rotor is in the position (*b*). A complete cycle, comprising two reversals of the current and the corresponding two maxima of positive and negative pressures, takes place during a half revolution of the engine. The current therefore has maximum values four times per revolution of the engine.

ELECTRIC IGNITION

(PART 4)

SPARK CONTROL

CONTROL OF SPARK ADVANCE

INTRODUCTION

1. **Methods of Producing Spark.**—In modern automobile ignition, the jump-spark, or high-tension, ignition system is used exclusively. The current may be obtained from a high-tension magneto, which generates current having a high voltage; from a low-tension magneto or dynamo, which generates current having a low voltage; or, from a storage battery or a dry-cell battery. When current is obtained from any source except a high-tension magneto, an induction coil must be used to increase the voltage sufficiently to cause an electric spark to jump the air gap in the spark plug. The high-tension magneto does not require the use of a separate induction coil, for it contains within itself primary and secondary windings that serve the purpose of a coil and enable the magneto to produce a current having a high voltage. With a battery and a separate induction coil, the primary circuit must be closed by the timer and opened by the vibrator of the coil, or both closed and opened by the timer in the case of a non-vibrator coil, in order to obtain a current in the secondary winding; with the high-tension magneto, the primary circuit must be interrupted by a circuit-breaker, or interrupter, in order to induce a current of high voltage in the secondary winding.

2. **Spark-Time Variation.**—The power generated in the cylinder of an automobile engine depends to a large extent on the time at which the primary circuit is interrupted, because it is then that the spark is formed and the combustible mixture ignited. In order to obtain the very best results from each explosion, the spark should occur at the most advantageous point in the compression stroke of the engine. This point varies with different engines and depends on the size of the combustion chamber, the degree of compression in the cylinder, and the speed of rotation of the engine.

The time at which the spark should occur depends on the size of the combustion chamber, because, with a small cylinder, less time is required to ignite the mixture completely; hence, the spark need not occur any appreciable length of time before the crank reaches its upper, or outer, dead center. With a larger cylinder and combustion chamber, a longer time is required for complete ignition; therefore, the spark must occur earlier. The time of ignition depends on the degree of compression in the cylinder, because, if the combustible mixture is very dense, it will burn more rapidly than if it is not compressed to so high a degree; therefore, with high compression in a cylinder, the spark need not occur so early as with low compression. The speed of the engine influences the time of ignition, because with a high piston speed there is less time for the mixture to burn than with a low piston speed; hence the spark should be advanced farther, and ignition must occur earlier, for a high engine speed than for a low engine speed.

3. **Methods of Spark-Time Control.**—With an internal combustion engine that runs at a constant speed, the spark should always occur at the same point in the compression stroke, because the three factors that affect the timing of the spark remain constant all the time the engine is running. Hence, with such an engine, there is no necessity of providing means for varying the timing of the spark and none is provided; or, in other words, a *fixed spark*, as it is called, is used. With an automobile internal-combustion engine, however, the speed of the engine varies necessarily between wide limits; hence, if a

fixed spark is used, it will produce the best results at the one engine speed for which it is fixed, and inferior results at other engine speeds. In spite of this fact, a fixed spark is used in some automobiles for the sake of simplifying the control of the machine.

If it is desired to obtain the best possible burning of the fresh charge at all engine speeds, means must be provided for varying the time at which the primary circuit is either closed or broken while the engine and the automobile are in motion. An ignition system in which the timing of the spark can be varied by hand is said to have a *variable*, or *hand spark*, *control;* if the timing is varied automatically by a change in the engine speed, the system is spoken of as having an *automatic spark control*, or a *governor control*.

HAND SPARK CONTROL

4. **Operation.**—The most natural, and, consequently, the most common, method of controlling the spark advance is by hand-operated means. On the majority of automobiles, the timer or the interrupter is operated through rods and levers from the hand lever on the steering post. Usually, a rod extends downwards through the center of the steering column, although, in some cases, this rod is placed alongside the column, and is connected by other rods and levers to the movable part of the timer or of the interrupter. The upper end of the rod in or alongside the steering column is turned by a hand lever. If the lever is moved in one direction, it rotates the timer or interrupter and causes the spark to occur earlier, but if it is moved in the opposite direction, it causes the spark to occur later.

5. In many cases, it is impossible to tell at the first glance which is the spark lever and which is the throttle lever, neither one being marked to indicate its purpose. In other cases, either the two levers or the quadrants over which the levers slide are plainly marked to indicate their purpose, the spark lever usually being indicated by the letter S and the throttle lever by the letter T. However, as the spark lever is connected

to the timer or interrupter and the throttle lever to the carbureter, these levers can be located on a car with which a person is not familiar by simply removing the engine hood and observing whether the rod running to the timer or the interrupter or that leading to the carbureter is moved when one of the levers is pushed forwards or backwards.

Another point to remember is that the direction in which the hand lever must be moved to advance or retard the spark is not the same on all automobiles. Sometimes it must be ascertained by experiment or from the manufacturer's book of instructions.

6. In an engine that is fitted with two independent ignition systems, as a battery system with an induction coil and a timer, and a magneto system, the circuit-breaking mechanism of the magneto is usually interconnected with the timer of the battery system, or the circuit-breaking mechanism of the magneto and the timer of the battery system are connected separately to the same spark lever, in such a manner that the circuit-breaker and the timer will move simultaneously. The magneto circuit-breaker and the battery-system timer are usually so adjusted with reference to each other that the spark will occur in the engine cylinder at the same point of the piston stroke, irrespective of whether the battery ignition system or the magneto ignition system is used. This means that the position of the spark lever for any given point of ignition is the same for both ignition systems.

7. Example of Hand Spark-Control Construction. The spark-control mechanism for a double ignition system is illustrated in Fig. 1. This illustration shows the connections on the Peerless six-cylinder engine, which makes use of two entirely independent systems of ignition, one employing a battery and separate timer and the other a magneto and magneto interrupter.

The spark lever *a* is connected by means of the spark advance rods *b* and *c* to the small bell-crank *d*. The spark advance rod *b* is connected to the rod *c* at the bottom of the steering column by means of a screw-and-nut connection *j* and levers *k*

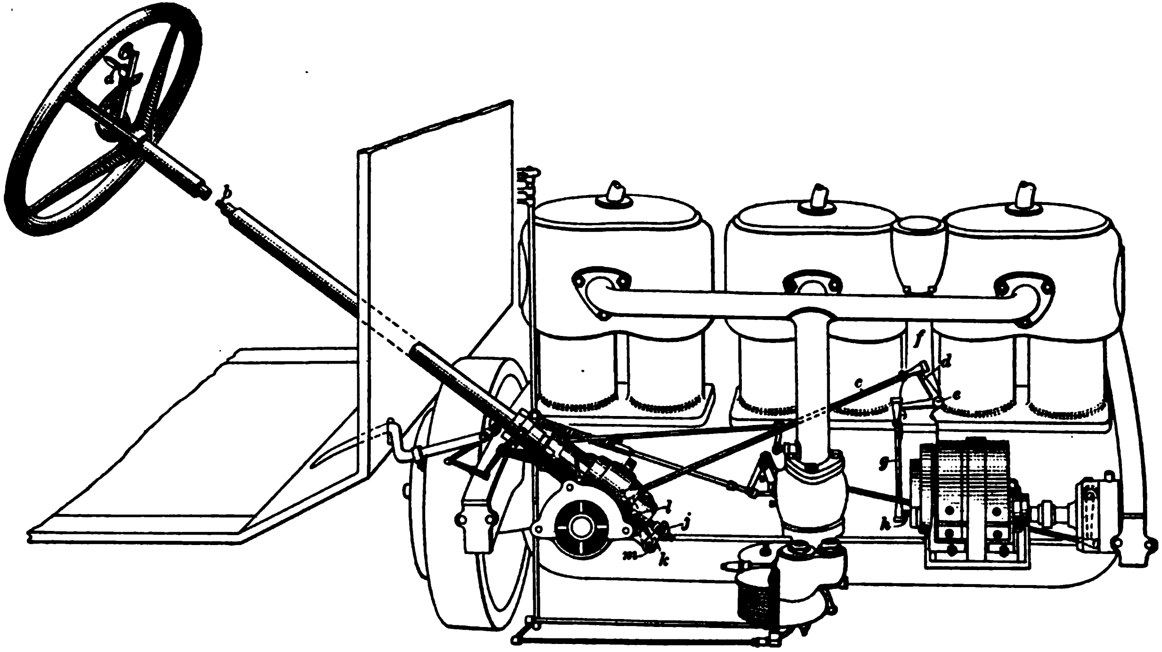

FIG. 1

and *l*, which are pivoted at *m*. The two levers *k* and *l* are fastened to the same shaft and hence move together. The lower end of the rod *b* contains a screw thread that turns in a nut carried by the lever *k*; thus, when the spark lever is moved, the screw is rotated and the nut moved up or down, and the rod *c* is thus shifted by means of the levers that are joined at *m*. The small bell-crank is connected at *e* to the movable part of the timer, which is located in the vertical column *f*; therefore, any movement of the hand lever *a* causes a corresponding movement of the timer. The rod *g* connects the bell-crank *d* with the magneto interrupter at *h*, so that a movement of the hand lever also rotates this circuit-breaker. By means of these connections, both the timer and the magneto interrupter are controlled by the same hand lever, and hence the spark advance is controlled in the same manner whether the battery ignition system or the magneto ignition system is used.

8. The Peerless system of hand spark control is only one of a large number of different methods of connecting the hand spark lever and the timer and interrupter. In some cases, the timer or interrupter is so located that the spark advance rod in the steering column is connected directly to it by a single rod. In other instances, the spark advance rod is not located inside of the steering column, but is placed along the outside of it, and the spark lever is under the steering wheel. In some cases the spark lever is placed on the dash. In any case, it is well for the driver to know how the connections are made on his car, and he should familiarize himself with them so as to be able more readily to locate and remedy trouble.

GOVERNOR SPARK CONTROL

9. Principle of Operation.—In order to do away with the necessity for a spark-advance hand lever on the steering wheel, and thus simplify the control of the engine, and yet obtain the spark at the proper time, an automatic governor control is used in some magneto ignition systems. When this control is used, the steering-wheel hand spark lever and all the connections to the magneto are eliminated, so that the driver need manipulate only the throttle lever; the spark advance is taken care of by the governor.

10. Automatic control of the spark advance is based on the fact that a weight revolved around an axis not passing through its center of gravity, moves away from this axis unless restrained, the force causing this outward motion being known as *centrifugal force*. In practice, two or more equal weights are employed; these are so distributed as to be in balance, in order that harmful vibrations may not be set up when the weights are revolving at high speed. The weights of the governor are either incorporated in the magneto itself or they are placed in a coupling between the magneto drive shaft and the magneto armature; they are arranged so that when the speed of the magneto is increased they fly outwards and by the assistance of proper mechanism change the position of the armature relative to the pole pieces, thus causing the spark to occur earlier. As the engine, and, consequently, the magneto governor, slows down, the weights move in again and thus retard the spark. By the use of the governor control, the spark is advanced when the engine speeds up and retarded when it slows down, without any attention from the driver.

11. Some practical examples of automatic governor control are the Eisemann automatic advance, the Franklin governor control, the multiple-ball coupling control, which is used on the Simms magneto and the Herz-Ruthardt magneto, and the Atwater-Kent automatic advance.

12. Eisemann Automatic Spark Control.—In the Eisemann automatic spark control, the spark advance is accomplished by means of an automatic governor attached to a regular high-tension magneto. The complete magneto is illustrated in Fig. 2, which shows the end casing *a* removed so as to expose the governing mechanism. The magneto is fitted with a shuttle-wound armature, which contains both primary and secondary windings and is driven through the governor from the shaft *b*. The interrupter, located at *c*, is so arranged that if the position of the armature relative to that of the shaft *b* is advanced, the primary circuit will be broken earlier in the engine cycle and the spark advanced. In a similar manner, if the position of the armature is retarded, the spark also will be retarded. The governor is so constructed that the armature is advanced when the engine is speeded up and retarded when the engine is slowed down; thus, the spark is controlled automatically.

13. The Eisemann automatic advance mechanism in place on the armature shaft, just as it is used in the magneto, is illustrated in Fig. 3, which also shows the different parts in detail. The armature *a*, which revolves between the magnets of the magneto, is carried on the three bearings *b*, *c*, and *d*, and is driven through the governing device from the shaft *e*. The gear *f* drives the high-tension distributor. The shaft *e* is driven by gearing from the crank-shaft, and it, in turn, drives the guide *g*, which is rigidly attached to the armature. The nut, or sleeve, *h* slides in the guide *g* and is turned by the shaft *e* through ridges or long threads that run the length of the shaft and partly around it and fit in corresponding grooves in the sleeve. The sleeve *h* is held in the outer end of the guide by a spring *j*, which surrounds the shaft and presses against the inner end of the guide *g*. Two weights *k* are connected to the outer end of the sleeve by arms *l*, and are hinged to the guide *g*

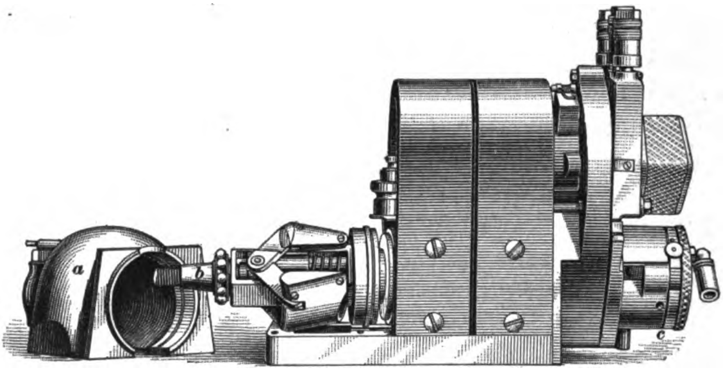

FIG. 2

by pins *m*. The shaft *e* is not connected to the guide *g* except through the sleeve *h* and the weights *k*.

When the engine speeds up, centrifugal force pulls the weights *k* away from the shaft, thus causing the sleeve *h* to be drawn in against the pressure of the spring *j* and to be slid on the shaft *e*. As the sleeve *h* is thus moved toward the armature, it is turned, relatively to the shaft *e*, by means of its grooves, which fit over the long ridges, or threads, on the shaft *e*. This relative rotation of the sleeve turns the guide *g*, and consequently the armature, forwards on the shaft *e*. The primary current is thereby interrupted earlier in the rotation of both the shaft *e* and the engine crank-shaft, and, as a result, produces earlier ignition of the charge in the cylinder that is to be fired. As the engine slows down, the weights move in toward the shaft, and, with the help of the spring, they push the sleeve out, thereby allowing the armature to shift its position backwards in relation to that of the shaft. This causes the primary current to be interrupted and the spark to be formed later in the cycle of the engine.

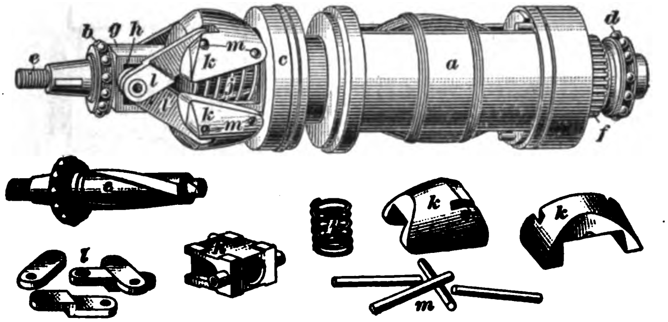

FIG. 3

14. Franklin Governor Spark Control.—The automatic spark control employed on the Franklin automobile makes use of the same principle as is employed in the Eisemann magneto; that is, the magneto armature is driven through an automatic governor that regulates the spark advance. Fig. 4, which is a diagrammatic illustration, shows the location of the magneto *a* and the governor *b* on a six-cylinder engine, the governor being driven through the shaft *c* by means of the helical gear *d*, which meshes with the gear *e* on the cam-shaft. The magneto armature is connected by a short shaft to the governor casing, from which it receives its motion. The construction of the governor is such that, when the speed of the engine exceeds about 300 revolutions per minute, the casing is advanced slightly ahead of the shaft *c* and the armature of the magneto is thus moved ahead relative to the position of the crank-shaft. This causes ignition to occur earlier in the cycle of the engine, and it has the same effect as advancing the spark by hand. As the speed of the engine decreases, the opposite action takes place and the spark is retarded.

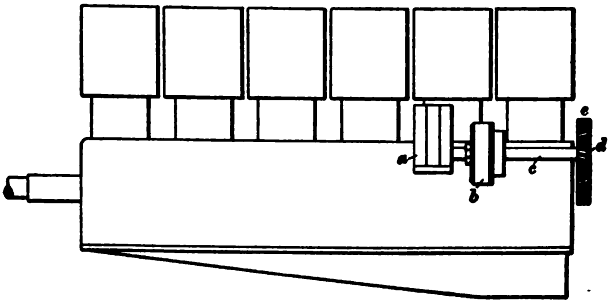

FIG. 4

15. The governor proper consists essentially of a circular casing keyed to the armature shaft and two weights mounted inside the casing. As illustrated in Fig. 5 (*a*), the casing is made up of two sections *d* and *e* that are held together at the joint *f* by the capscrews *g*; the section *d* is keyed to the armature shaft *d'*. Views (*b*) and (*c*) show the arrangement of the different parts in the sections *d* and *e* when separated and viewed from the open ends thus made. The section *d*, view (*b*), contains weights *h* that are pivoted to the casing at *j* and are provided with gear-teeth *k* that mesh with the teeth on the pinion *l*. The pinion is fitted to the end of the drive shaft *m*, which is connected to the casing only through the pinion and weights. The springs *n* hold the weights in position against the stop-studs *o* when the engine is not running, or when it is running very slowly.

In the smaller section *e* of the governor is contained a small friction brake that assists in preventing the governor from acting at low speeds. This brake is shown in view (*c*), and consists principally of two springs and plungers and a friction strap. The spring seat *p* is pinned to the drive shaft *m* and turns with it, carrying around the springs *q* and plungers *r*. Each spring holds the end of a plunger in the notch *s* of the strap *t*, which is riveted to the casing, and tends to prevent the casing from turning relative to the shaft, so that the governor will not act at low speeds. At high speeds, the action of the governor is sufficient to force the plungers out of the notches and move the casing ahead of the drive shaft.

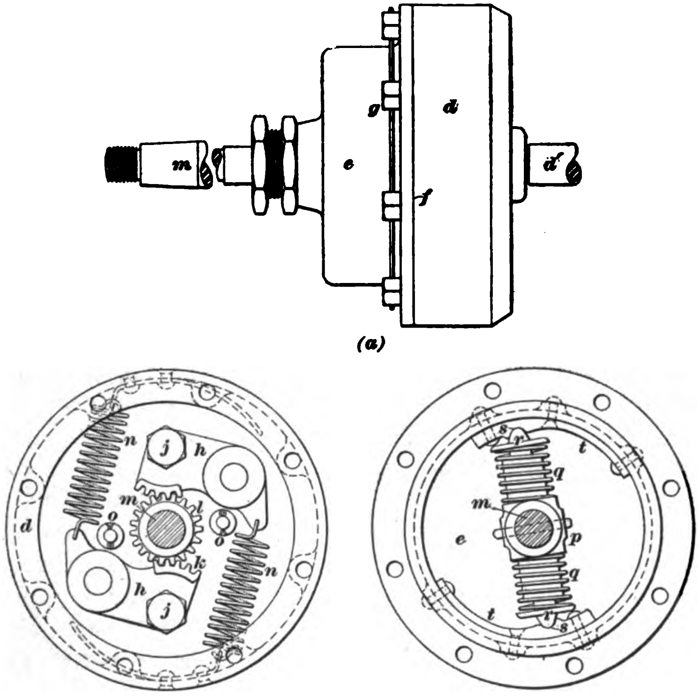

(*a*)

(*b*) (*c*)

FIG. 5

When the speed of the engine reaches a certain point, the resistance of both the friction brake and the springs *n* is overcome and the weights *h* fly out sufficiently to cause their teeth to turn on the pinion. This action forces the weights and the casing ahead of the pinion and the drive shaft; and, as the casing is keyed to the armature shaft, it also is advanced relative to the drive shaft. As the drive shaft is connected by gears to the engine crank-shaft, the governor advances the magneto armature in relation to this shaft; hence, by this arrangement, the spark is made to occur earlier in the cycle of the engine. When the engine slows down, the weights resume their original positions and the spark is again retarded.

16. Multiple-Ball Coupling Spark Control.—The fundamental principle of operation of the multiple-ball coupling spark control is the same as that of the Eisemann and Franklin automatic spark controls; that is, the armature shaft of the magneto is driven through a coupling that acts to advance the relative position of the armature as the speed increases and to retard it as the speed decreases. The coupling is located between the magneto drive shaft and the armature, and consists of two halves in the form of disks, which are connected by means of steel balls placed in curved grooves formed in the disks. The grooves in the two disks are of opposite curvature, so that when the action of centrifugal force throws the balls outwards and away from the center, the driven disk is advanced in relation to the other, in order to make room for the balls farther out in the grooves. This action occurs when the magneto speeds up, so that it has the effect of advancing the position of the armature, and, consequently, the time of ignition, at high engine speeds.

17. The construction of the multiple-ball coupling, or governor, used on the Herz-Ruthardt magneto is illustrated in Fig. 6. This coupling contains six steel balls *a* that connect the disks *b* and *c* through the grooves *d* and *e*. The disk *b* is fixed on the armature shaft and is driven by the disk *c*, which is secured to the magneto drive shaft. The grooves *d* and *e* are curved in opposite directions, so that when the coupling is assembled, as shown, and the drive shaft speeds up and the balls move out from the center, they force the disk *b* ahead of the disk *c* and thus advance the armature. As the speed of the engine and that of the magneto drive shaft decreases, the balls assume their original position near the center of the coupling and the armature is retarded accordingly. The armature shaft and magneto drive shaft are kept in alinement by means of an extension *g* on the disk *b*, which fits in the hole *h* in the disk *c*.

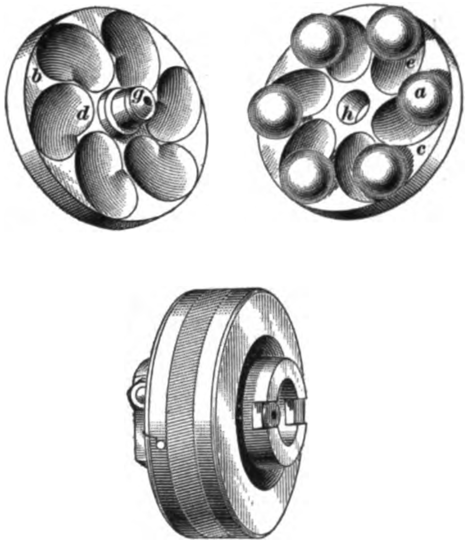

FIG. 6

18. The automatic governor, or coupling, used on the Simms magneto is slightly different from the Herz-Ruthardt coupling, in that the disks are not flat and fewer balls are employed. In this device, one disk is convex and the other is hollow; thus, the coupling remains in alinement without any special extension or swivel. The multiple-ball coupling may be used on any suitable magneto by simply inserting it between the drive shaft and armature shaft and without altering the design of the machine; the magneto must have its interrupter mechanism so arranged that the part not attached to the armature remains stationary in respect to the pole pieces.

19. Atwater-Kent Automatic Spark Control.—The Atwater-Kent automatic spark-control mechanism, which is designed to be used in connection with the Atwater-Kent system, type K, operates on exactly the same principle as the automatic governors previously described. It is a modification of the ordinary centrifugal governor. The governing device is contained in the same casing as the primary circuit breaker and the high-tension distributor, and acts as a coupling through which the circuit breaker is driven. One side of the governor is connected to a vertical shaft that is driven by the cam-shaft, and the other side to a short shaft that is enclosed in the casing and operates the apparatus making and breaking the primary circuit. The instant at which the primary circuit is broken is automatically varied by centrifugal force acting upon the governor weights.

20. The principle of operation of the Atwater-Kent governing device is shown diagrammatically in Fig. 7. The governor is composed essentially of four weights. These are connected to the short shaft that operates the circuit breaker and the vertical driving shaft by two arms, one at the top of the device and one at the bottom. In order to simplify the illustration, only two weights are shown. These weights are marked *a* and *a′*. The upper weight *a* is connected to the arm *b* by the pin *c*, and the lower weight *a′* to the arm *b′* by the pin *c′*. The weights are pivoted together at their center by a pin *d*. The lower arm *b′* is rigidly attached to the vertical driving shaft *e*, and the upper arm *b* is rigidly attached to the shaft *f*, which is part of the circuit-breaker. In order to prevent the weights from moving out too rapidly, they are connected to the arms by springs *g* and *g′*, against which the centrifugal force must act.

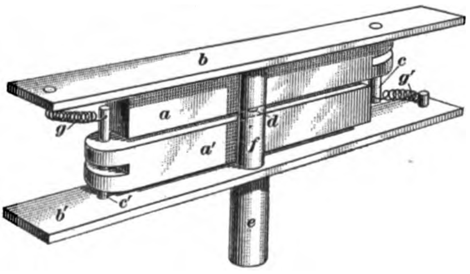

FIG. 7

When the vertical shaft *e* rotates, it drives the short shaft *f* through the governor weights and arms. If, at any time the speed of the shaft *e* is increased, there is a corresponding increase in the centrifugal force acting on the weights, and they will move outwards from their original position a distance depending on the amount of increase in speed. As the weights move outwards, or away from the shaft, they rotate in relation to each other about the pin *d*, so that the pin *d* also moves away from the center of the shaft. Since the weights are connected to the arms at opposite ends, they tend to turn the arms in opposite directions as they fly outwards; that is, to draw the points *c* and *c'* toward each other. The result of this movement is to change the relative positions of the shafts *e* and *f*, and thus, as the speed of the governor is increased, to move the shaft *f* ahead of the shaft *e* in the direction of rotation. In the actual device, the shaft *f* operates the circuit-breaking mechanism; hence, the primary circuit is broken earlier in the stroke of the engine piston when running at high speed than when running at low speed. If at any time the engine, and, consequently, the governor, slows down, the weights move in toward the vertical shaft; in such an event, the shaft *f* is rotated in relation to the shaft *e* in a direction opposite to that in which the mechanism is turning, with the effect that the primary circuit is broken later in the stroke of the engine and the spark is retarded.

21. The actual arrangement of the parts of the Atwater-Kent governor is illustrated in Fig. 8, which shows the governor mechanism mounted in the casing. The four weights are shown at *a* and *a'*, each pair being pivoted together at *d* and *d'*; the two arms are shown at *b* and *b'*; and the springs, at *g* and *g'*. The slotted shaft *f* operates the circuit-breaking mechanism by means of four indentations, one of which is shown at *h*. These indentations form a ratchet that engages with the circuit-breaker trigger arm and thus actuates the circuit-breaking mechanism. The driving coupling *j* connects the device with the vertical driving shaft. The arm *b* is rigidly attached to the shaft *f*, and the arm *b'* is rigidly secured to the driving coupling.

The principle of operation explained in connection with the diagram in Fig. 7 applies directly to the real device. On referring again to Fig. 8, it will be evident that when the speed of the engine, and, hence, that of the governor, is increased, the weights *a* and *a'* will fly outwards or away from the center of the governor and will draw the arms *b* and *b'* with them, thereby moving the shaft *f* ahead of the driving shaft in the direction of rotation and thus advancing the time of ignition. When the speed of the engine decreases, the weights will move inwards, or toward the center of the governor, and the shaft *f* will lag behind the driving shaft, so that the spark is retarded.

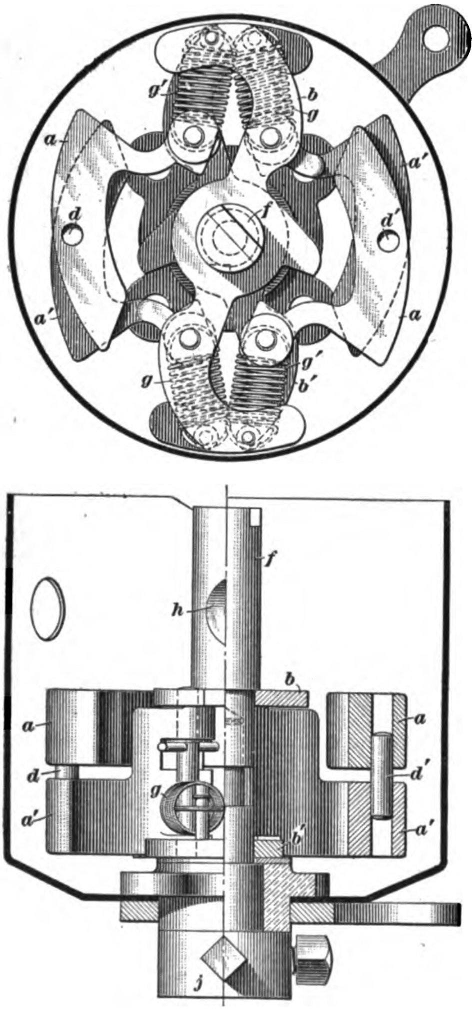

FIG. 8

FIXED SPARK

22. The point at which the spark occurs in the cylinder of an automobile engine may usually be varied, either automatically or by hand, while the engine is running, because it is desirable to advance the spark as the speed of the engine is increased and to retard it as the speed is decreased in order to allow the combustible mixture the proper length of time to burn. However, in the case of smaller engines, the time required for the propagation of the flame is very short, and the variation of the spark does not have so great an influence on the power developed as it does in the case of larger engines. On account of this fact, and in order to simplify the control of the engine, some of the smaller pleasure automobiles and a number of commercial vehicles make use of what is known as the *fixed spark.*

23. In the fixed-spark system, the time at which ignition takes place is fixed in one position and no spark control lever or automatic governor is used. Hence, the spark always occurs at the same point in the piston stroke and is generally set with a slight advance, that is, to occur immediately before the piston reaches its dead-center position, so as to allow time for the flame to propagate.

24. The advantage of the fixed spark is its simplicity, because, when it is used, the control of the engine is reduced to the manipulation of the throttle lever only. The fixed spark is used extensively on motor trucks in order to protect the engine as far as possible from injury through the unskilful use of the spark control.

SPARK INTENSITY

FACTORS AFFECTING SPARK INTENSITY

25. When a battery ignition system is used, the primary current has the same strength, regardless of the timing of the spark, in relation to the stroke of the engine piston, and hence a spark of the same intensity is obtained throughout the whole spark range, from fully retarded to fully advanced. The intensity of the spark is not affected in any way by the speed of the engine, because the source of the current is independent of the engine. It is assumed in this discussion that the battery gives a current of sufficient strength to produce a spark.

26. When either direct-current dynamos or magnetos are used for ignition, they are driven by the engine; hence, in a general way, the strength of the primary current as well as the intensity of the spark varies with the speed of the engine, being least at low engine speeds and highest at high engine speeds. There is an exception, however, in the case of non-synchronous friction-driven dynamos and magnetos with a centrifugal governor control. In these, the governor prevents the armature from exceeding a certain maximum speed, and, consequently, there is a limit to the spark intensity, which limit is usually somewhat below that obtainable at the highest engine speed, provided the armature is positively driven.

27. Every direct-current dynamo used for ignition, and at least one form of synchronous alternating-current magneto, which is constructed with a large number of pole pieces, merely takes the place of the battery as a source of current, and is used in conjunction with a timer, or with a distributor and timer, depending on whether there is an induction coil for each cylinder, or a single induction coil for all the cylinders. In such dynamos and in such a magneto, the intensity of the primary current is practically constant throughout the whole revolution of the dynamo or magneto armature, and, as a result, a spark of practically uniform intensity is obtained through the whole spark range, the spark intensity varying only with the armature speed.

28. Synchronous-ignition magnetos usually generate an alternating current; they have a primary circuit-breaker—that is, an interrupter—and a high-tension distributor incorporated in their construction. With all such magnetos, regardless of whether they generate the high-tension current directly in the magneto or in a separate induction coil, the spark intensity varies with the armature speed; the spark intensity through the spark range may be uniform or practically uniform, or it may vary between wide limits at a given armature speed, depending on the construction of the magneto.

29. Many synchronous magnetos are built for dual ignition, the second ignition system employing current from a battery, using either the same or a separate circuit-breaker operated by the rotation of the armature for breaking the battery current, an induction coil for the secondary current of the battery system, and the regular magneto distributor for distributing the high-tension current when the battery system is in use. With such magnetos, the spark intensity, when the battery system is in use, is uniform throughout the whole spark range and is independent of the magneto armature speed. When the magneto system is in use, the spark intensity varies with the armature speed and may or may not vary through the spark range.

INFLUENCE OF SPARK INTENSITY ON STARTING ENGINE

30. From the statements made in Arts. **25** to **29**, inclusive, it should be apparent that, with a battery system, the engine can be cranked with the spark fully retarded so as to prevent a back-fire; also, that the cranking can be done at a very low speed, because the spark intensity is independent of the engine speed.

When the ignition is furnished by a dynamo or a magneto giving the same, or practically the same, spark intensity through the whole spark range, the engine can be cranked with the spark fully retarded. Since the strength of the secondary current varies with the armature speed, the engine will have to be cranked rather fast in most cases in order to get a sufficient current strength to have the current jump the gap at the spark plug. In fact, it may be necessary in many cases to turn the engine crank over several revolutions as fast as can be done by hand in order to get a sufficiently high armature speed to produce sparks at the spark plug.

When the ignition is furnished by a synchronous magneto that gives a much weaker current when the spark is retarded than when fully advanced, the engine can rarely be started on the magneto with the spark retarded, as it cannot be cranked fast enough to get up an armature speed sufficiently high to give a spark at the spark plugs. It will usually be necessary to advance the spark lever to about the middle of the spark range, and sometimes even more, with the attendant risk of a back-fire. Since magnetos of the type under discussion are, in practice, almost invariably used in connection with either dual or double ignition systems, it is the usual practice to employ the battery system for starting the engine and to change over to the magneto system after the engine has been started. With some magnetos of the type under discussion, it is necessary to change over to the battery system when the engine is running slowly, driving the car on high gear, because the armature speed is then insufficient to produce a spark.

METHOD GIVING SPARK VARIABLE OVER MAGNETO SPARK RANGE

31. In many magneto ignition systems, the advance and retard of the spark is obtained by rotating either the interrupter lever or the cam, depending on which part is fixed to the armature shaft, in relation to both the armature and field magnets. For instance, if the interrupter lever or mechanism is fitted to the end of the armature shaft and is turned by it, the cam is generally arranged so that it can be rotated backwards and forwards. When it is moved in the direction of rotation of the armature, the time at which the primary circuit is broken is made later and the spark is retarded; if it is moved in the opposite direction, the spark is advanced. In case the cam is fixed to the end of the armature shaft, the advance and the retard are accomplished by rotating the interrupter lever. When this lever is moved in the direction of rotation of the armature, the time of interruption of the current is made later and the spark retarded; when it is moved in the opposite direction, the spark is advanced.

32. With a magneto having two pole pieces and the usual form of shuttle armature, irrespective of whether the magneto is of the low-tension or the high-tension type, the maximum electromotive force is produced in the primary circuit at two diametrically opposite points in the revolution of the armature, in which case the best spark is obtained at the spark plug when the primary circuit is broken at these points. Magnetos are usually set so that the maximum spark is obtained when in the advance position, for this position is the one that is used most. But, with a magneto in which the primary circuit-breaking mechanism can be rocked in relation to both the armature and field magnets, as just explained, the spark will be weaker as it is retarded, because the break in the primary circuit will not occur when the current is at the point of maximum intensity. On this account, such a magneto, provided the speed of the armature is the same in each case, will not produce so good a spark when in the retard position as when in the advance position.

METHODS GIVING SPARK UNIFORM OVER MAGNETO SPARK RANGE

33. Classification.—Many methods have been devised for use in connection with synchronous magneto ignition systems whereby it is possible to obtain a spark of uniform, or practically uniform, intensity during the entire range of spark control, from full advance to full retard. Among these methods the most important are the following:

1. By rocking the field magnets, keeping the one part of the interrupter mechanism fixed in relation to the field magnets and the other part fixed to the armature. Either the interrupter lever, or its equivalent, or the interrupter cam may be fixed in relation to the field magnets.
2. By making use of a movable magnetic screen that is located between the armature and the field magnets, and to which one part of the interrupting mechanism is attached.
3. By making use of a coupling in the armature shaft, by means of which the armature may be rotated in relation to the engine. Either the interrupting mechanism is rotated with the armature and the cam is held stationary in relation to the field magnets, or the cam is rotated with the armature and the interrupting mechanism is held stationary in relation to the field magnets.
4. By the use of either extended or specially shaped pole pieces.

34. Rocking Field Magnets.—A unique method of obtaining a spark of the same intensity in the retard position as in the advance position consists in rocking the field magnets of the magneto with one part of the interrupter, the second part of the interrupting mechanism being attached to the armature shaft and rotating with it in the usual manner. It is well to bear in mind that the interrupter or the circuit-breaker mechanism consists essentially of two parts, namely, an interrupter cam of suitable form and an interrupter lever or equivalent mechanism carrying a contact screw; the cam, by lifting the lever, breaks the primary circuit, thus interrupting the primary current formed by the primary winding of the magneto armature. Obviously, either the interrupter lever or the interrupter cam may be rigidly attached to the armature.

35. The effect of keeping one part of the interrupter in the same position with reference to the magnets, and the other part in the same position with reference to the armature, is illustrated diagrammatically in Fig. 9. As shown in this illustration, the interrupter lever a is hinged to one of the magnet pole pieces b, and the two-lobed cam c is rigidly attached to the armature. In a shuttle-wound armature, the maximum current occurs when the armature core d, Fig. 9 (a), is in the position at which the end pieces of the core section bridge the gaps between the pole pieces, as shown. It is therefore necessary that the primary current always be interrupted at this point in the rotation of the armature in order to obtain a spark of maximum intensity for all positions of advance and retard. This is accomplished when the interrupter parts are fixed with respect to the magnets and armature, and the magnets are rocked to advance and to retard the spark.

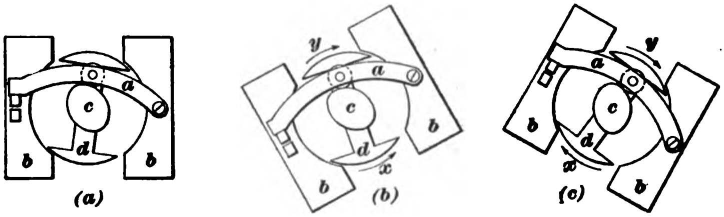

(a) (b) (c)

Fig. 9

Assume that the magnets, and, hence, the pole pieces b, view (b), and also the one part of the interrupter, are rocked in the direction of the arrow x, which is opposite to that in which the armature rotates, as shown by the arrow *y*. Inasmuch as the cam *c* is fixed to the armature, the primary current is broken when the armature core is in the position shown in view (*a*); that is, at its point of maximum intensity. Also, since the armature is positively driven by the engine, the breaking of the primary circuit occurs earlier with reference to the stroke of the piston; that is, the spark is advanced by rocking the magnets and one interrupter part in a direction opposite to that in which the armature rotates.

If the magnets and the one interrupter part are rocked in the direction in which the armature rotates, as in view (*c*), the breaking of the primary current occurs later with reference to the piston stroke; that is, the spark is retarded.

36. Movable Magnetic Screen.—Virtually the same effect that is obtained by the use of movable field magnets may be secured by means of a movable screen, or shield, located between the armature and field magnets of the magneto. In such a construction, one part of the interrupting mechanism is attached to the screen and rocked with it when the spark is advanced or retarded. The screen is usually made of soft iron or steel. Rocking it between the pole pieces and armature has the effect of shifting the magnetic field; but, as one part of the interrupting mechanism and the screen, or field, are always in the same relative position, a current of the same intensity throughout the entire range of spark control is obtained.

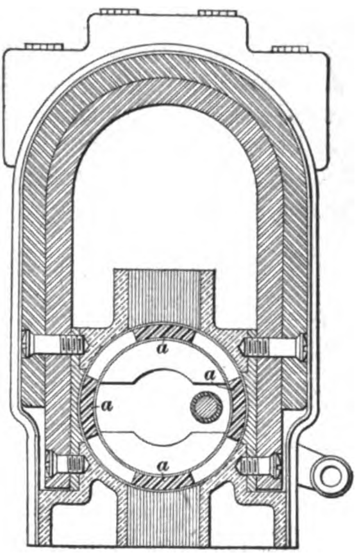

FIG. 10

37. The magnetic screen, as applied in practice to a magneto, is illustrated in Fig. 10, which shows a cross-sectional view of the Pittsfield high-tension magneto. The field of the magneto contains four poles, so that the screen is made up of four iron bars *a*, which, together with the interrupting mechanism, are mounted on suitable heads.

38. In Fig. 11 is shown the effect of rotating the magnetic screen with one part of the interrupting mechanism, when advancing or retarding the spark, as applied to a two-pole magneto. The screen is composed of two pieces of iron *a* and *b* located between the shuttle-wound armature *c* and the pole pieces *d* and *e*. The maximum current is generated when the end pieces of the core section of the armature bridge the gaps between the parts of the magnetic screen, as is shown in view (*a*). The interrupter lever *f* is hinged to the screen, and the two-lobed cam *g* is attached to the armature and rotates with it. When the movable screen, together with the interrupter arm *f*, is rotated in the direction indicated by the arrow *x*, or opposite to the direction in which the armature is turning, as indicated by the arrow *y*, it assumes the position shown in view (*b*) and the spark is advanced in the manner explained in Art. **35.** As the cam is fixed to the armature, the primary circuit is broken when the magnetic screen and the armature are in the relative positions shown in view (*a*), or when the maximum current is being generated.

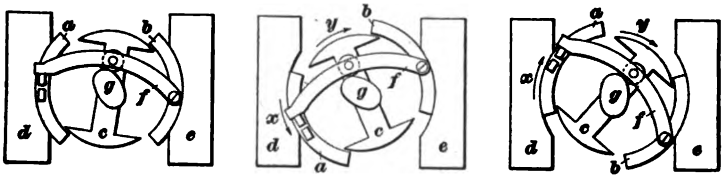

(*a*) (*b*) (*c*)

FIG. 11

When the spark is retarded, the magnetic screen and the interrupter arm are rotated in the same direction in which the armature is turning, and they assume the position shown in view (*c*). As the screen and the armature keep the relative positions shown in views (*a*) and (*b*), the maximum current, practically speaking, is also generated for a retarded spark;

thus, the highest electromotive force is produced for all settings of the spark advance.

39. Armature Shaft Couplings.—One form of shaft coupling by means of which the armature and the interrupting mechanism of a magneto are advanced or retarded so as to obtain a current of uniform intensity for all settings of the spark is described in Art. **13** and illustrated in Fig. **3**, in connection with the Eisemann automatic governor. It consists principally of two parts, namely, a guide, which is fixed to the armature, and a nut, or sleeve, containing helical grooves that fit over corresponding threads on the drive shaft of the magneto. The sleeve is free to slide in the guide; therefore, when it is moved toward the armature, it advances the armature and interrupting mechanism in relation to the drive shaft and thus advances the spark, and when it is moved away from the armature it retards the spark. In the Eisemann magneto the sleeve is moved automatically by the centrifugal action of the governor weights. Similar couplings are sometimes used where the spark is controlled by hand, in which case the sleeve is operated from the hand lever on the steering wheel. Either the interrupting mechanism or interrupter cam may be attached to the armature and advanced or retarded with it in order to vary the time of ignition; and if the second part of the interrupter is kept stationary with respect to the magnets, a spark of uniform intensity will be obtained over the whole spark range.

40. Special Pole-Piece Construction.—Specially shaped pole pieces, such as are illustrated in Fig. 12, are sometimes used on magnetos for the purpose of giving a current of electricity with an intensity that is high enough to produce a good spark in the retard position and at low engine speeds. In some cases the pole pieces are extended and notched, or provided with teeth, and in other cases they are pointed in the middle.

41. When the pole pieces of a magneto are extended and notched, as illustrated in Fig. 12 (*a*), two regions of maximum intensity of the lines of force are produced. The first region is at the notch *a* and the second at the edge *b* of the pole piece.

The effect of the notch *a* is to intensify the lines of force at this point; thus, as the armature passes it, there is a change in the number of lines of force cut and a current is produced. In a similar manner, a current is generated when the armature passes the edge *b* of the pole pieces. The magneto may be set so that a spark occurs in the advance position when the armature passes the notch *a*, and in the retard position when it passes the edge *b*. This produces a current of approximately uniform intensity for all positions of the spark advance from full advance to full retard. This form of pole piece is used in some models of the Simms magneto.

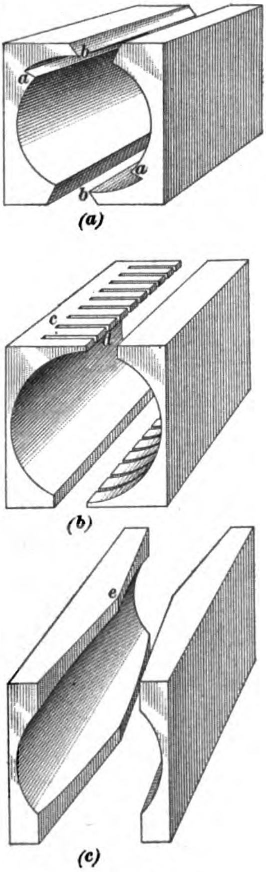

Fig. 12

42. Where the pole pieces of a magneto are extended and provided with teeth, as shown in Fig. 12 (*b*), the greatest change takes place in the number of lines of force cut by the armature when it passes the roots *c* of the teeth and when it passes their ends *d*. Therefore, as the highest electromotive force is produced when the armature coils pass these points, the magneto may be set to produce a spark in the advance position when the edge of the armature passes the roots of the teeth and in the retard position when it passes their ends. Pole pieces of this form are used in several models of the Bosch magneto.

43. Pole pieces are sometimes pointed in the middle, as is illustrated at *e*, Fig. 12 (*c*). The effect of this construction is to draw the lines of force toward the middle of the pole pieces and thus intensify the field at this point. The result is that the intensity of the induced current is increased and a hotter spark is formed at the spark plug. Pole pieces shaped in this manner are used in some of the Eisemann magnetos.

STARTING ON THE SPARK

REQUIREMENTS

44. An automobile engine is said to be *started on the spark*, or *on compression*, when it is set in motion by opening or closing the primary circuit of the ignition system by hand, and thus producing a spark in the cylinder whose piston is at that time on its working stroke. In order to start an engine on the spark, it must be stopped with a combustible mixture in one of the cylinders and with the piston in that cylinder on its working stroke, so that when the spark is formed it will fire the charge and drive the piston forwards and thus start the engine. To produce a spark with the engine stopped, the ignition system must be equipped with either a dry-cell battery or a storage battery in order that current will always be available. An automobile equipped with a magneto only cannot be started on the spark, because no current can be obtained, and hence no spark produced, with the engine and magneto not running. It follows, therefore, that in order to be started on the spark, automobiles must be fitted either with a single battery system, a dual system, or a double system, each of which employs a battery.

METHODS OF STARTING ON THE SPARK

45. When an automobile is fitted with a single battery system and vibrator coils, the engine is started on the spark by placing the spark advance lever in the retarded position and then closing the hand switch in the primary circuit. If the primary circuit happens to be closed at the timer, by the closing of the hand switch, the vibrator is set in motion, and a high-tension current is induced in the secondary winding of the induction coil. This current is led to the spark plug in the proper cylinder by the secondary cable, and if the cylinder contains a compressed charge it is fired with the desired result. The arrangement of the ignition system is such that the rotor of the timer is always in contact with the contact piece connected to the coil that is in the circuit of the cylinder whose piston is about to begin, or is on, its working stroke. This insures a spark in the proper cylinder.

In case the system is provided with a single coil and a distributor, a spark will be produced in the cylinder only when the rotor of the distributor is in contact with the contact segment leading to that cylinder. If the engine has stopped with the distributor rotor between two of the contact segments, or brushes, no high-tension current will be produced, because the secondary circuit will not be complete; hence, an engine cannot be started on the spark under these conditions.

46. Starting on the spark with a dual ignition system employing a magneto and a battery with a non-vibrator coil is effected by moving the switch to the battery position and then pressing a button, which either breaks the battery circuit momentarily or brings into the circuit a vibrator, thus changing the coil to a vibrator coil for the time. When, by pressing the button, the battery circuit is broken only momentarily, a single spark is formed; but, when a vibrator is brought into action, the circuit is broken a number of times and a series of sparks is produced. With the dual system, in which the magneto distributor is also used for the battery system high-tension current, the rotor of the distributor must be in contact with one of the brushes leading to a spark plug in order to have a spark produced in the cylinder. Obviously, in order to prevent a back-fire, the spark lever should be in its retarded position.

47. With the double system of ignition, which consists of two entirely independent systems, one receiving current from a magneto or dynamo and the other from a battery, the engine may be started on the spark by making use of the battery current, either as in the single battery system or as in the dual system.

MODERN IGNITION SYSTEMS

SINGLE MAGNETO IGNITION SYSTEMS

CLASSIFICATION

48. A **single magneto ignition system** is one containing but a single source of electric current, that source being a magneto. In such a system, all the current used for ignition purposes is obtained from the magneto, and no battery is connected in the circuit. The magneto used may be either a low-tension magneto generating a current of low voltage and requiring the use of a separate vibrator or non-vibrator induction coil, or a high-tension magneto generating a current of sufficient voltage to jump the gap in the spark plug and thus form a spark without the aid of a separate coil.. A single magneto ignition system employing a low-tension magneto may be called a *low-tension single magneto system,* and one employing a high-tension magneto may be called a *high-tension single magneto system*.

49. In a low-tension single magneto ignition system, the source of current is a magneto of the low-tension type, as just explained. Such a magneto generates a current of insufficient electromotive force to cause a spark to jump the air gap in the spark plug, so that separate vibrator or non-vibrator induction coils must be used to change this low-tension current into current having the necessary voltage. Where non-vibrator induction coils are used, the magneto must run in synchronism, that is, in step, with the engine, so that the spark occurs when the current is most intense, or, twice during each revolution of the armature in the common shuttle-wound type of magneto. When a vibrator or a trembler coil is used, an alternating-current magneto need not rotate in synchronism with the engine;

but it must rotate at a sufficiently high rate of speed in order that the alternations of the current will be so rapid that but little variation in the electromotive force will occur at the instant of ignition. This latter type of magneto is known as a *high-frequency alternating-current magneto.*

50. The high-tension single magneto ignition system differs from the low-tension single magneto system in that the current is supplied by a high-tension magneto that generates a current of sufficiently high voltage to jump the gap in the spark plug, and hence no separate induction coils are required. This ignition system is the simplest one in use, because the outside wiring consists only of the secondary cables running from the magneto to the spark plugs, and the primary wire running from the magneto to the switch on the dash, by means of which the magneto may be grounded and the ignition thus cut out.

In order that a high-tension magneto can be used to furnish current for a single ignition system, it is desirable that it be so constructed as to give as efficient a spark in the retard position as in the advance position. Any high-tension magneto so constructed that a good spark can be obtained by cranking with the control in the retard position is especially suitable for supplying current to a single ignition system.

LOW-TENSION SINGLE MAGNETO SYSTEM

51. Construction of Ford High-Frequency Magneto. A well-known example of the high-frequency alternating-current magneto is that used on the Ford Model T automobile. Fig. 13 (*a*) shows this magneto assembled in the case with part of the planetary transmission system. The magneto consists essentially of a stationary armature containing sixteen spool-shaped coils *a* attached to a spider that, in turn, is atttached to the cylinder casting, and a set of the same number of permanent horseshoe magnets *b* fixed to the flywheel and rotating with it. The magneto is therefore direct-connected to the engine and is located at the rear end of the crank-case.

One of the armature coils is shown in detail at *a*, view (*b*). Each coil has two windings of copper-ribbon wire, one winding being clockwise, and the other counter-clockwise. The coils, which are arranged at equal intervals around the armature plate *d*, are connected in series with each other, the two terminals being brought out at the top of the casing. One of the terminals is connected by means of a spring connection to a binding post on top of the magneto and the other terminal is grounded on the armature plate. At *b*, view (*b*), is illustrated one of the horseshoe magnets, sixteen of which are spaced around the flywheel *c*, as shown in view (*a*). The magnets are set with the closed ends next to the center of the flywheel and with the poles extending outwards and opposite the coils. In this arrangement, two north poles are placed together and two south poles are placed next to each other. The magnets revolve with the flywheel and at a distance of $\frac{1}{32}$ inch from the stationary coils, so that a magnetic field is set up about the coils and a current is induced in them. The current generated in the armature coils flows, by way of the binding post, through the induction coils and back through the engine frame and magneto frame to the grounded terminal on the armature plate, thus completing the circuit.

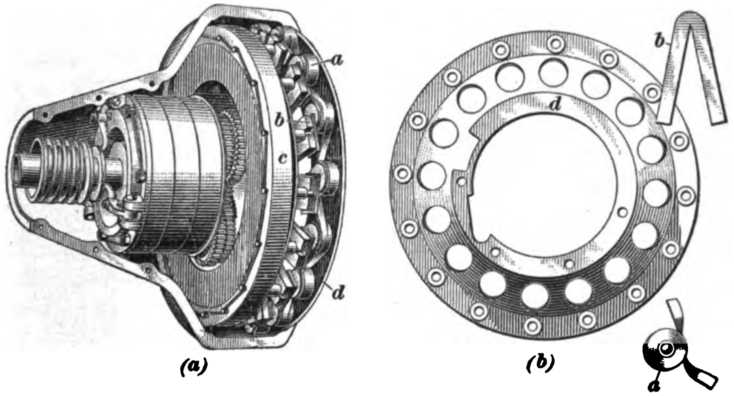

(*a*) (*b*)

FIG. 13

As the magnets move through a large circle, they have a high peripheral speed in relation to the rotary speed of the engine. On account of this, a good spark may be formed by hand-cranking, for the magnets pass the coils at a comparatively high rate of speed even when the engine is turned over slowly.

52. Wiring Diagram for the Ford Magneto.—The method of wiring the Ford low-tension magneto system of ignition is illustrated in Fig. 14. This illustration shows the front part of the automobile with part of the hood and the dash

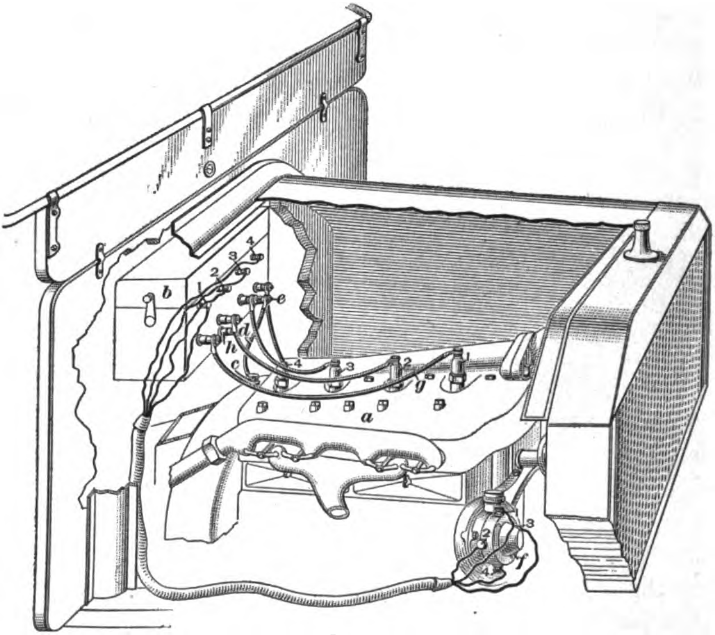

Fig. 14

removed, exposing the engine cylinders *a* and coil box *b*. As will be observed, the coil box is located on the side of the dash next to the seat. It contains four induction coils with either individual vibrators or a master vibrator, there being one coil for each cylinder. Low-tension current is taken from the magneto at the binding post *c* and flows through the wire *d* to the primary terminal *e* of the induction coils. It then flows through the primary winding of the coil, which, at that instant, is connected in the circuit by the timer *f*, through the proper wire to the contact piece of the timer, and then back to the magneto by way of the timer rotor and engine frame. For instance, assume that the rotor of the timer is in contact with contact piece number *1*. The primary current then flows through the primary winding of coil number *1*, through the proper connection to the contact piece number *1* of the timer, and back to the magneto by way of the ground. While the current is flowing through this path, the vibrator of coil number *1* is rapidly opening and closing the primary circuit, so that a current of high tension is induced in the secondary winding of that coil. This current flows through the high-tension cable *g* to the spark plug number *1* and then back to the secondary winding of the coil by way of the engine cylinders and frame and rotor of the timer, completing the circuit through part of the primary circuit, as is the case in three-terminal coil systems. The timer connections in this system are such that the order of firing is *1-2-4-3*.

The Ford magneto ignition system, although classed as a single magneto system, is so arranged that it can be readily changed into a dual system by connecting up a battery so that it can be used to supply current in place of the magneto. The induction coils are provided with a binding post for connecting one terminal of the battery into the system, the second battery terminal being grounded to the frame. The connections to the switch regularly furnished on the coil box are such that, with a battery connected up in this manner, the regular switch may be used for cutting out the magneto and connecting the battery in the circuit without any other change being made in the system. The battery binding post is shown on the coil box at *h*, Fig. 14. When the battery is used for ignition in the Ford car the battery current is entirely independent of the magneto, but it uses the same timer as the magneto.

HIGH-TENSION SINGLE MAGNETO SYSTEMS

53. Construction of the Mea High-Tension Magneto. An example of a high-tension magneto designed for use with the single ignition system is the Mea magneto, one model of which is illustrated in Figs. 15, 16, and 17, like parts being lettered the same in these illustrations. The complete magneto is shown in Fig. 15. It is provided with rocking field magnets *a*, which are illustrated in detail in Fig. 16, so that the magnets and armature are always in the same relative positions when the spark occurs, and a spark of uniform intensity is therefore produced for all positions of advance and retard. The magnets are bell-shaped and arranged horizontally in the magneto, with the armature shaft extending through a hole in the closed end. The entire magneto is mounted in a frame *b*, Fig. 15, and the time of ignition is varied by rocking it by means of the control arm *c*.

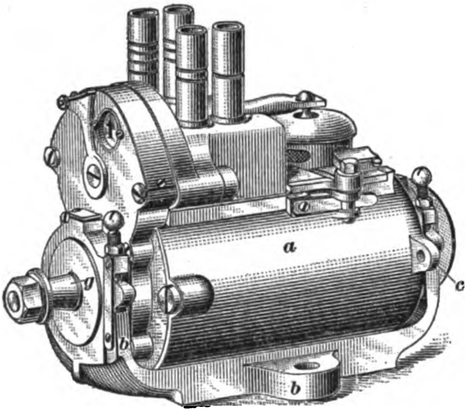

FIG. 15

54. On referring more particularly to Fig. 17, which is a longitudinal section and end view of the magneto, it will be seen that the armature *d*, the winding on which consists of a few turns of a heavy primary winding and many turns of a fine secondary winding, is carried by the ball bearings *e* and *f*, upon which the shaft *g* rotates. The shaft *g* also carries the interrupter, which revolves with the armature and is composed of the roller *h*, the spring *j*, and the contact points *k* and *l*. A cam-disk *m* is fixed to the magnets, and carries two cams located opposite each other. As the roller *h* passes over the cams, it presses against the spring *j* and separates the contact points *k* and *l*. A current is therefore induced

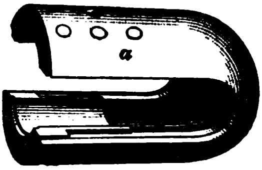

FIG. 16

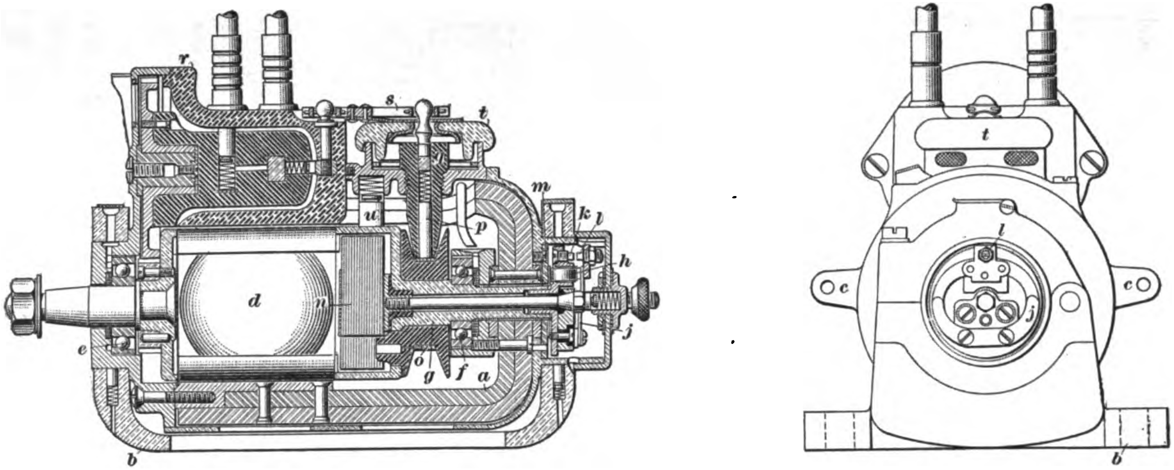

FIG. 17

in the secondary winding twice during each revolution of the armature. The condenser *n* is connected in the primary circuit to prevent the interrupter contact points from burning and to help increase the voltage of the secondary current. The high-tension current is collected from the collector ring *o* by means of the brush *p* set into the brush holder *q*, and is carried to the distributor *r* through the bridge *s*. From the distributor, the current is led in the regular way through the secondary terminals to the spark plugs. A safety spark gap is provided at *t* to protect the armature from excessive voltages in case the plugs become disconnected or the spark plug gap becomes too wide. A good ground between the armature and the rest of the magneto is insured by means of a carbon grounding brush *u*.

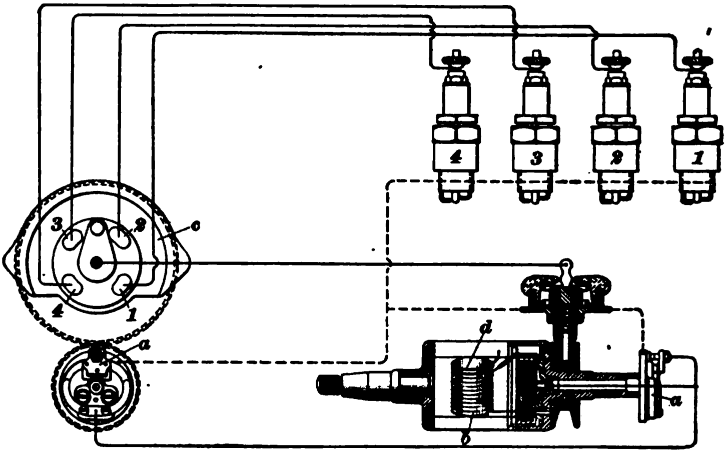

FIG. 18

The Mea magneto can be driven only in one direction; if the armature is to rotate in an opposite direction, a new cam-disk arranged for this direction must be substituted for the old cam-disk of the interrupting mechanism.

55. Principle of Operation of the Mea Magneto.—The principle of operation of the Mea high-tension single magneto system of ignition is shown in Fig. 18, which is a diagram of connections for this system arranged for a four-cylinder engine. A low-tension current is generated in the primary winding *d* by the rotation of the armature between the magnets of the magneto. This current flows to the interrupter *a* by way of the long screw that holds the interrupter in place, and from this point it flows back to the armature through the frame of the magneto and armature core to which the primary winding is attached. When a charge is to be fired, the low-tension current is interrupted by the interrupter *a* and a high-tension current is induced in the secondary winding *b*. The high-tension current is carried to the distributor *c* through the internal connections of the magneto and is directed to the spark plugs in the proper order, which, in this case, is *1-2-4-3*.

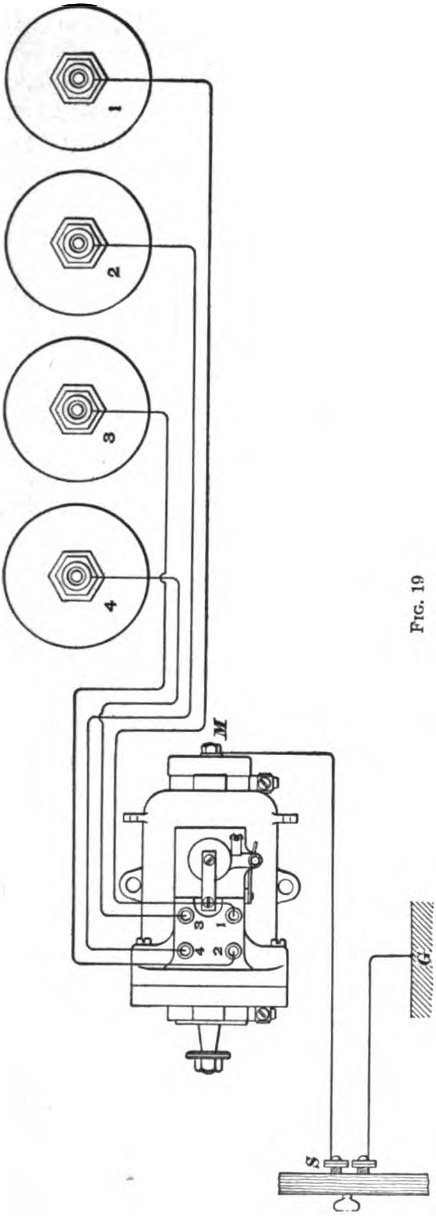

FIG. 19

56. Wiring Diagram for the Mea Magneto.—A wiring diagram that illustrates the outside connections of the Mea high-tension single ignition system is shown in Fig. 19. The low-tension terminal *M* of the magneto is connected by a primary wire to one terminal of the switch *S* located on the dash of the automobile. The other terminal of the switch is connected to the frame of the car or engine, as at *G*, so that the primary current may be grounded and the ignition cut out by closing the switch. The distributor terminals *1*, *2*, *3*, and *4* are connected to the proper spark plugs by the secondary cables in order to give the desired order of firing. The order of firing shown in the diagram is *1-3-4-2*, so that distributor terminal *1* is connected to spark plug *1*; terminal *2*, to spark plug *3*; terminal *3*, to spark plug *4*; and terminal *4*, to spark plug *2*.

57. Bosch High-Tension Magneto.—Another high-tension magneto, one model of which is designed to be used with the single system of ignition, is the Bosch magneto. An outside view of the single ignition, or independent, magneto is shown in Fig. 20, and a longitudinal section and an end view of the same magneto are shown in Fig. 21. This type of magneto differs from another model of the Bosch magneto in that the armature, instead of being stationary, is a double-wound armature of **H** section revolving between horseshoe magnets. Extended pole pieces having the extensions cut into broad teeth are employed on this magneto, so that a hot spark may be obtained with the spark control set in the retard position as well as in the advance position, thus providing a safe way for starting the engine by hand cranking.

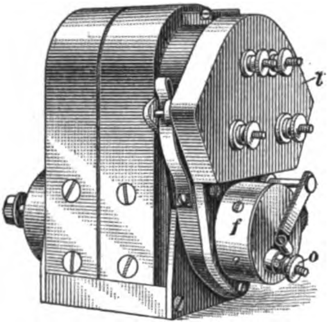

FIG. 20

58. Referring to Figs. 20 and 21, in which like parts are lettered the same, one end of the primary winding is grounded to the armature core, and the second end is connected to the brass disk *a*. A fastening screw *b* passes through the disk *a*, holding the interrupter in place and also conducting the primary current to the interrupter contact-block *c*. The screw *b* and the block *c* are insulated from the interrupter disk *d*, which is electrically connected to the armature core. The interrupter contact-block *c* carries a platinum contact

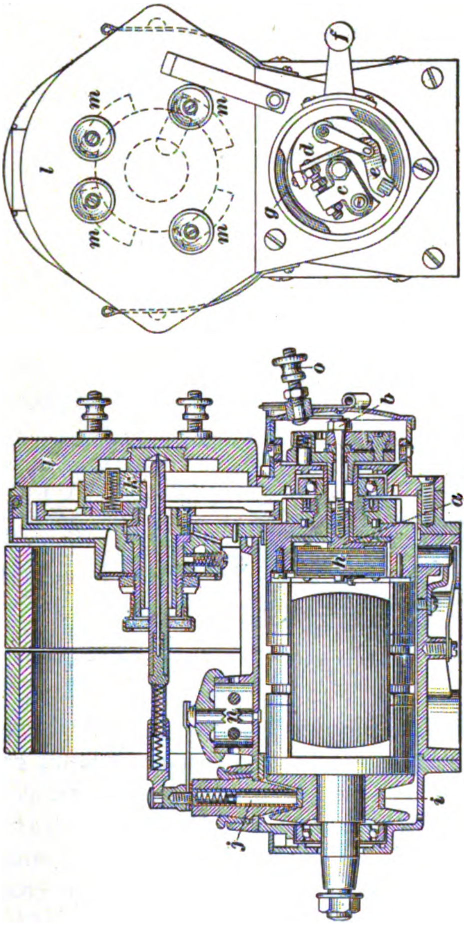

FIG. 21

screw fitted with locknuts. The interrupter lever *e* is in the form of a bell-crank, and carries on one end a platinum screw that makes contact with the one in the block *c* and is held in contact by means of a spring. The interrupter lever is electrically connected to the armature core and, hence, to one end of the primary winding, which is thus short-circuited as long as the platinum screws of the contact-block and interrupter are in contact. The interrupter housing *f* can be rocked to advance or retard the spark; it carries two steel cams that, through coming in contact with the one end of the interrupter lever *e*, break the contact between the screws of the interrupter lever and contact-block *c*, thereby suddenly breaking the primary circuit. A condenser *h* is electrically connected in a shunt across the two contacts of the interrupter mechanism.

The secondary winding is placed directly over the primary armature winding, one end of the secondary winding being connected to the live end of the primary winding and the other end to the slip ring *i*. A carbon brush *j* conducts the high-tension current to the carbon brush *k* of the distributor rotor. The distributor disk *l* is stationary, and has embedded in it four metal segments *m* (for a four-cylinder engine) that connect electrically with terminals to which the spark-plug cables are attached. A safety spark gap *n* is placed in the high-tension circuit.

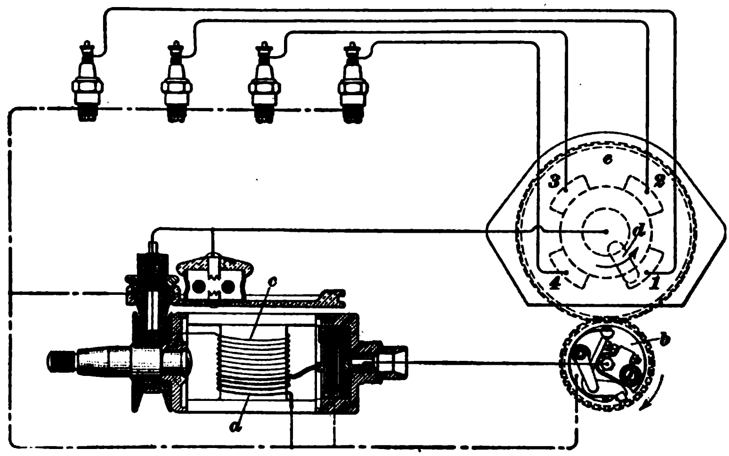

FIG. 22

The purpose of the terminal *o* is to connect the primary circuit to a switch, through which the magneto may be grounded.

59. The internal connections for the Bosch magneto are shown in Fig. 22. The low-tension current generated in the primary winding *a* of the magneto is carried to the interrupter *b*, where it is interrupted twice during each revolution of the armature. From this point, the current returns to the armature by way of the frame of the magneto. The high-tension current, which is induced in the secondary winding *c*, is carried to the rotor *d* of the distributor *e*, from which it is sent to the spark plugs through the contact pieces *1*, *2*, *3*, and *4*. The secondary current returns to the secondary winding by way of the cylinder walls and engine frame, thus completing the circuit.

60. Wiring Diagram for the Bosch Single System. The outside wiring connections for the Bosch single ignition system for a four-cylinder engine are practically the same as those previously shown in connection with the Mea magneto. The wiring diagram is shown in Fig. 23. The primary terminal *M* of the magneto is connected by a primary wire to a terminal of the switch *S* on the dash. The other terminal of the switch is grounded on the frame *G* of the automobile, thus providing a means of grounding the magneto and cutting out the ignition. The high-tension distributor terminals

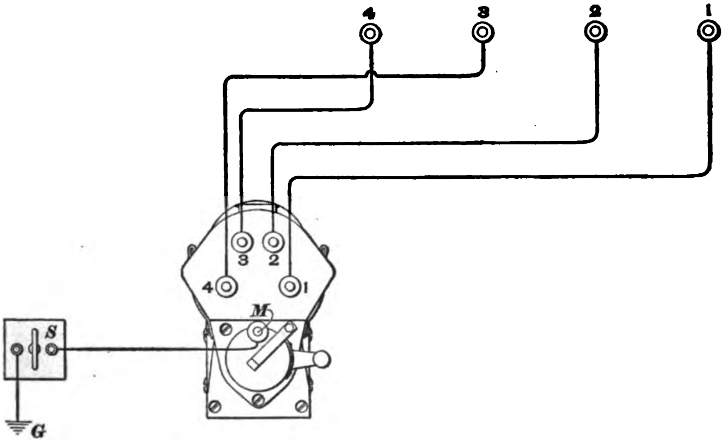

Fig. 23

1, *2*, *3*, and *4* are connected to the different spark plugs in the proper order to secure the firing order desired. In Fig. 23, the firing order *1-2-4-3* is shown. This is obtained by connecting distributor terminal *1* to spark plug *1*, distributor terminal *2* to spark plug *2*, terminal *3* to spark plug *4*, and terminal *4* to spark plug *3*. The other firing order, which is *1-3-4-2*, for a four-cycle engine, may be obtained by making the proper connections.

DUAL IGNITION SYSTEMS

DEFINITIONS

61. A **dual system** of ignition is one that contains two separate and distinct sources of electricity, either of which may be used to supply current to a single set of spark plugs. The two sources of current ordinarily consist of a magneto and a battery, each of which is connected to a switch on the dash of the automobile, so that either may be brought into the ignition circuit. Either a low-tension magneto requiring a separate transformer coil or a high-tension magneto may be used in connection with the battery in a dual system. When a low-tension magneto is used with a battery, the same transformer coil and primary current interrupter are usually employed by both the magneto and the battery; but, when a high-tension magneto and a battery are used, a separate coil for the battery current must be connected in the circuit, and a separate battery interrupter is sometimes provided. In either case, the distributor and secondary wiring are common to both the magneto and the battery. Either a dry-cell battery or a storage battery may be used in the dual system of ignition.

LOW-TENSION DUAL MAGNETO SYSTEM

62. Construction of Magneto.—An example of a widely used dual system of ignition employing a low-tension magneto as one of the sources of current is the Splitdorf system. In this system, the magneto is of the ordinary low-tension type, containing an armature with a single winding so that a current of low voltage is generated. One model of this magneto is illustrated in Figs. 24 and 25, Fig. 24 being an external view and Fig. 25 an end view and longitudinal section. Reference to these illustrations, in which like parts are lettered the same, will show that the single-wound armature *a*, which rotates between the poles of the magnets *c*, is driven by the shaft *b* carried on ball bearings *d* and *d'*. The insulated plug *e* carries the generated current from the armature to the terminal *f*, from which it is led to the transformer coil. The interrupter *g*, shown in detail in Fig. 25, is composed of a two-lobed cam *h*, which is mounted on the sleeve *j* and rotates with the armature, and a lever *k*. A longitudinal section of the sleeve *j* is shown in the sectional view. The lever is raised by the cam, which serves to break the circuit by separating the contact points at *l*. The time of ignition is varied by rocking the arm *x*, which rotates the lever *k* in relation to the position of the cam and armature. The distributor *m* is driven from the armature by the gears *n* and *o*.

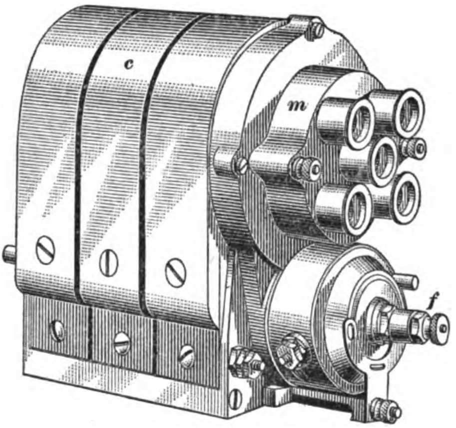

FIG. 24

63. Principle of Operation.—The inside wiring connections for the Splitdorf dual system of ignition are indicated in Fig. 26. In this illustration, the magneto armature is shown at *a*, the battery at *b*, the switch at *c*, the transformer coil at *d*, the interrupter at *e*, the condenser at *f*, the distributor at *g*, and the spark plugs at *h*. With the switch blade *j* in the position indicated by the full lines, the magneto supplies the current and the battery is cut out of the system. With the magneto

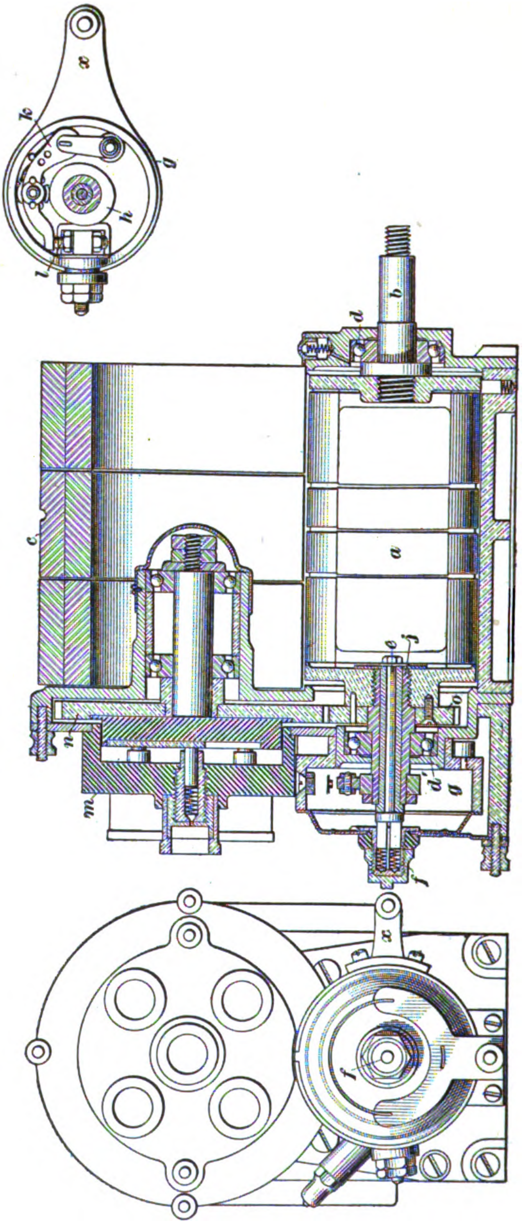

FIG. 25

thus connected in the circuit and the interrupter points closed as shown, current flows from the armature *a* to the switch terminal *M*, then through the blade *j* to the terminal *M'*, and back to the magneto through the interrupter and ground. The current at this instant does not flow through the transformer coil, but is short-circuited. However, the moment that the lobe of the cam strikes the interrupter lever, the short circuit is broken and the current flows from the center of the switch blade through a metallic connection *k* to the terminal *B'* and thence to the primary winding of the induction coil. The circuit is completed back to the magneto armature through the primary-secondary terminal *ps* and the ground. The sudden increase of current in the primary winding of the coil, caused by separating the interrupter points, induces in the secondary winding a high-tension current of sufficient voltage to jump the gap in a spark plug and produce a spark. This secondary current flows to the distributor by way of the terminal *s*, and is transmitted to the spark plugs in the desired order and returned to the induction coil through the ground connections.

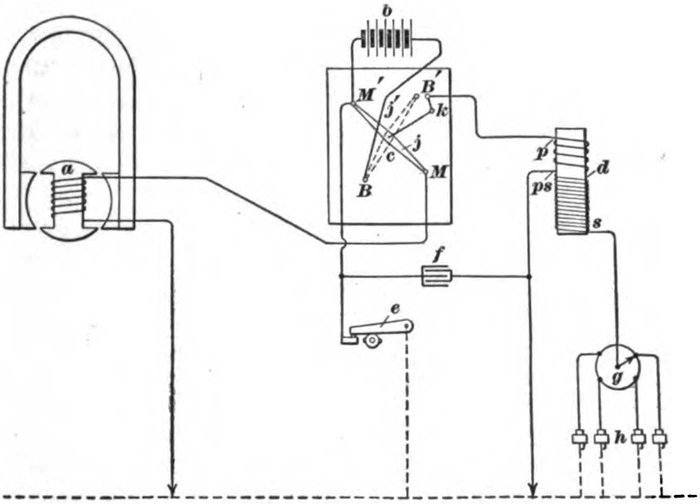

FIG. 26

With the switch blade in the battery position, as indicated by the dotted lines *j'*, the magneto circuit is broken and the battery is connected in the system. It is to be noted that while the switch blade makes contact with the terminal *B* when in this position it does not make contact with *B'*, so that the battery circuit is completed through the switch by means of the connection *k*. In this case, when the interrupter points are closed, the current flows from the battery to the primary terminal *p* on the coil by way of the switch blade *j'* and the connection *k*. After passing through the primary winding, it returns to the battery through the ground and the interrupter. When the battery circuit is broken at the interrupter, a high-tension current is induced in the secondary winding of the induction coil on account of the sudden decrease of current in the primary winding. This high-tension current is transmitted to the spark plugs by the distributor in the regular manner.

It is well to remember that in the Splitdorf dual system the battery cannot have one terminal grounded to the frame of the car; both battery terminals must be connected to battery binding posts provided on the coil box.

64. By tracing the magneto and battery circuits in the manner just described, it is evident that when the magneto is used the high-tension current is obtained by interrupting the short-circuit of the primary current, but when the battery is in use the secondary current is formed by interrupting the primary current. Thus, two distinct methods of inducing a secondary current are employed in this system, one in connection with the magneto current and the other with the battery current.

65. An engine using this system of ignition is started on the spark by pressing a push button that controls the connection *k* in the switch. When starting on the spark, the circuit must be closed at the interrupter and the distributor rotor must make contact with one of the distributor terminals. A spark can then be produced in the spark plug connected at that instant to the distributor by putting the switch in the battery position and pressing the button. This operation breaks the battery circuit and induces in the secondary winding of the induction coil a high-tension current that is of sufficient voltage to form a spark at the spark plug.

66. Wiring Diagram.—The practical wiring diagram for the model T Splitdorf low-tension magneto with a transformer coil is shown in Fig. 27. With the switch handle *e* in the magneto position, current flows from the magneto terminal *a* to the transformer terminal *a′*, and then back to the magneto by way of terminals *b′* and *b* or *c′* and *c*, depending on whether the interrupter points are closed or open. In case the interrupter points are closed, the primary current returns to the magneto armature through the wire *b′ b* and the interrupter; but, if they are separated, it returns through the wire *c′ c* and the frame of the magneto.

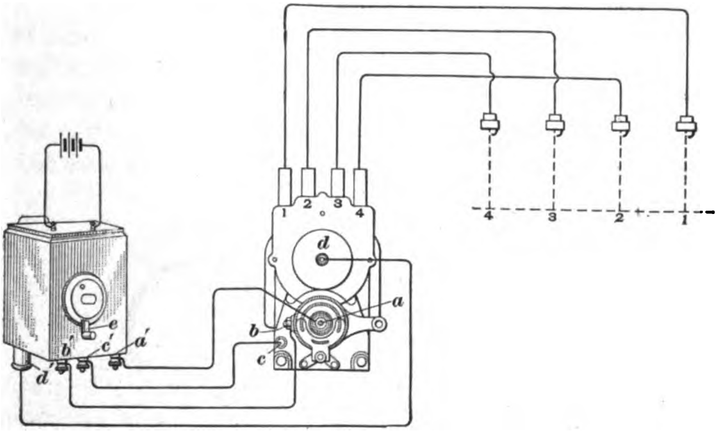

Fig. 27

When the switch handle is in the battery position, the magneto circuit is broken and the battery circuit completed through the interrupter by means of connections *b′ b* and *c′ c*. In the off-position, the switch blade does not make contact with any terminal, so that both the magneto circuit and the battery circuit are cut out. The secondary current that is generated in the secondary winding of the coil is transmitted to the distributor terminal *d* from the transformer terminal *d'*. From the distributor it is led to the spark plugs by the high-tension cables, as shown. The order of firing depends on the arrangement of the high-tension cables, that illustrated being *1-3-4-2*.

HIGH-TENSION DUAL MAGNETO SYSTEMS

67. Construction of the Bosch Dual Magneto.—With the exception of a few minor details, the magneto used in the high-tension dual magneto ignition system is the same as that used in the single high-tension magneto system, a current of high voltage being generated in exactly the same manner. The only difference in the construction of the high-tension dual magneto and the single ignition, or independent, magneto is that the former is provided with an additional interrupter for timing the battery circuit and a secondary terminal for connecting the high-tension distributor to the switch on the battery coil, the direct connection between the collecting ring and distributor being removed.

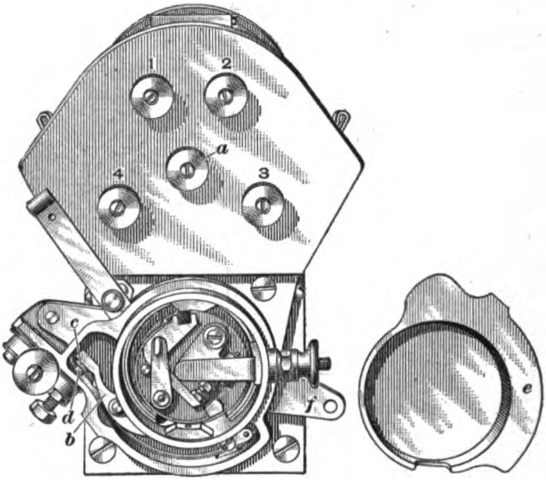

FIG. 28

68. Fig. 28 shows the Bosch high-tension magneto equipped for dual ignition, the interrupter cover *e* being removed so as to show the parts of the interrupters. When thus equipped the conductor between the collecting ring and distributor is removed and a central terminal *a* is added to the distributor for the purpose of connecting it, by means of a wire, to the switch. This is done so that the current will flow to the distributor by way of the switch when the magneto is connected in the circuit. The other feature of this magneto is the addition of the battery timer or interrupter. This consists of the interrupter lever *b*, the contact points *c* and *d*, and a two-lobed cam, not shown in the illustration. The cam is attached to the magneto interrupter disk and rotates with the armature. It is in the form of a steel ring carrying two lobes, or projections, that rock the lever *b* as they pass it, thus opening and closing the battery circuit of which the lever forms a part. The time of ignition is varied by rotating the timer mechanism by means of the control arm *f*. The interrupter lever *b* is electrically connected to the frame of the magneto, but the other parts of the mechanism are insulated from the remainder of the magneto.

69. Wiring Diagram for the Bosch Dual System. The wiring diagram for the Bosch dual system of ignition is illustrated in Fig. 29. In view (*a*), the high-tension magneto is shown at *A*, the battery at *B*, the spark plugs at *C*, and an end view of the combined spark coil and switch at *D*, illustrating the connections at the switch. In view (*b*), this coil is shown in place on the dash of the automobile. Either the magneto or the battery can be connected in the circuit by means of the switch that is operated by the handle *f*. When the handle is moved, the entire coil within the housing is rotated and the desired connections are made on contact plates by means of spring contacts. For instance, when the handle is moved to the battery position, the battery circuit is completed. It extends from the battery terminal *g* to the switch terminal *g'*, through the primary winding of the coil and, by way of the switch terminal *h'*, to the battery interrupter *h* on the magneto. From the battery interrupter it flows by way of the magneto frame and ground connection *j'* back to terminal *j* on the battery.

At the same time, the magneto is cut out by grounding the primary circuit through terminals *k*, *k'*, *l'*, and *l*. The magneto armature continues to revolve, but no high-tension current is generated because the primary current is short-circuited through the ground and does not pass through the magneto interrupter. The battery interrupter opens and closes the battery circuit, so that a high-tension current is induced in the secondary winding of the coil *D* and flows by way of the switch terminal *m'* to the terminal *m* on the distributor, from which point it is sent to the spark plugs in the proper order.

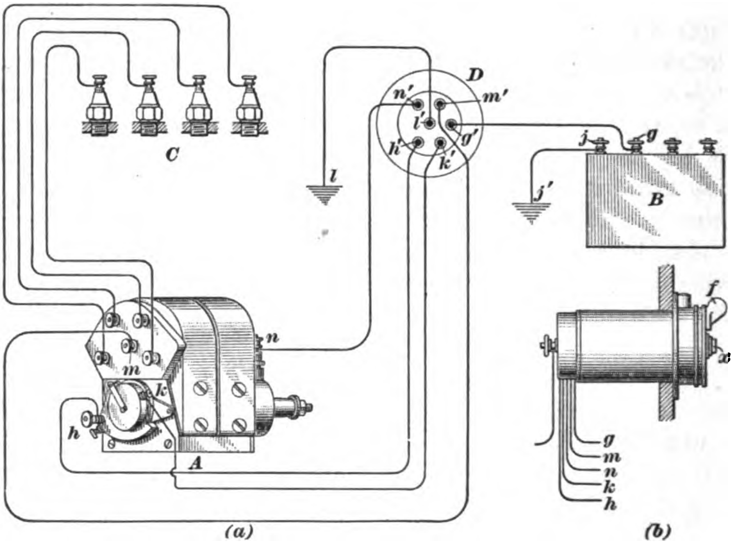

(*a*) (*b*)

FIG. 29

When the switch handle is moved to the magneto position, the battery circuit is disconnected and the high-tension circuit of the spark coil is opened at the switch. The magneto is brought into use by opening the grounded wire at terminal *k'* on the switch and connecting the high-tension terminal *n'* to the distributor terminal *m'*. A high-tension current is generated in the magneto in the regular way, and it is delivered, by way of the magneto terminal *n*, through the switch and to the distributor.

With the switch handle in the off-position, the low-tension magneto circuit is grounded and the battery circuit is opened at the switch; hence, neither the magneto nor battery can operate and no spark is formed. The different positions of the switch handle are plainly marked on the face of the switch by *B*, *M*, and *Off*, meaning, respectively, battery position, magneto position, and off-position.

70. For the purpose of starting on the spark, the Bosch coil is provided with a vibrator that is connected in parallel with the battery interrupter in the coil circuit and that may be brought into use by pressing a button *x*, Fig. 29 (*b*), located in the center of the end plate of the coil. A pressure on this button will close the battery circuit through the vibrator and coil, so that a high-tension current will be induced in the secondary winding, provided the engine has not stopped with the battery interrupter contacts closed. In such a case, the battery circuit will already be complete and no spark will be formed. However, the connections of the push button are such that when the battery interrupter is already closed it can be momentarily opened by pressing upon the button and then quickly releasing it; hence, a current of high voltage can be produced for all positions of the crank-shaft. The high-tension current thus generated will be sent to the spark plug in the cylinder whose piston is on its working stroke; therefore, if there is a combustible mixture in that cylinder, an explosion will result and the engine will start. Obviously, the spark advance lever must be in its fully retarded position.

71. Construction of the Eisemann Dual Magneto. In the Eisemann dual ignition system, as in the Bosch system, the magneto does not differ from the ordinary independent, or single, magneto except in the addition of a battery interrupter and a central distributor terminal. It is the usual type of high-tension magneto, employing horseshoe magnets and a double-wound armature. A front view of the magneto, with the timing lever and end cap *a* removed so as to show the interrupting mechanism, is illustrated in Fig. 30. The battery interrupter consists essentially of the interrupter lever *b*, the contact screw *c*, and a two-lobed cam, not shown in the illustration. The interrupter lever is pivoted on the interrupter housing at *d*, and is rocked by means of a steel cam fitted at the back of the regular magneto interrupter, this cam rotating with the armature. The cam contains two projections, and as these pass the lower end of the interrupter lever they press it out and thus separate the platinum contacts at *e*. The interrupter lever *b* forms part of the battery circuit; therefore, when the contacts are separated, the battery current is interrupted and a current of high voltage is induced in the secondary winding of an induction coil that is also connected in this circuit.

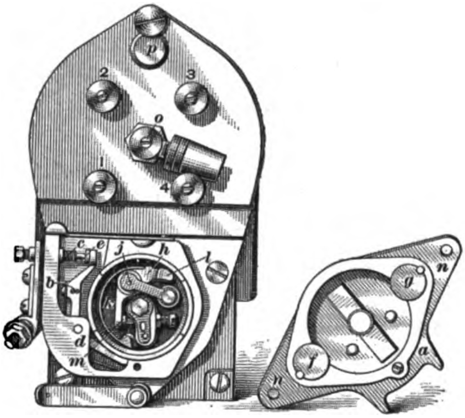

Fig. 30

72. The regular magneto interrupting mechanism is shown also in Fig. 30. The entire mechanism except the cams *f* and *g*, which are located on the timing lever, is fitted to the armature shaft and rotates with it. The interrupter lever *h* is pivoted at *j* on the bronze plate *k*, so that, as the end *l* passes over the cams *f* and *g*, the platinum contacts at *m* are separated. As these contacts form part of the primary circuit of the magneto, the primary current is interrupted when they are separated and a high-tension current is induced in the secondary winding of the armature. The variation of the time of ignition by both battery and magneto current is effected by rotating the timing lever *a* by means of the arms *n*. As the cams *f* and *g* are carried backwards or forwards, the spark produced by the magneto occurs earlier or later in the revolution of the armature. If the cams are carried backwards, or in the opposite direction from that in which the armature is revolving, the spark will be advanced; and, if they are moved forwards, or in the same direction in which the armature is revolving, it will be retarded. Rotating the timing lever *a* also rocks the battery interrupter; hence, when the current is being furnished by the battery, the time of interruption is made earlier or later by moving the arms *n* backwards or forwards, just as when the magneto current is employed.

As in the Bosch dual magneto system, the secondary current does not flow directly from the armature to the distributor through the magneto itself, but is carried to the switch on the dash by a high-tension cable and from there to the central terminal *o*, Fig. 30, on the distributor. The glass disk *p* in the distributor plate is for the purpose of ascertaining through which terminal the high-tension current is passing. Numbers from *1* to *4* are arranged on the movable part of the distributor, so that when number *1* appears at the glass the current is being sent through terminal number *1*, when number *2* appears it is being sent through terminal number *2*, and so on.

73. Wiring Diagram for the Eisemann Dual System. The wiring diagram for the Eisemann dual ignition system is indicated in Fig. 31, *A* being a front view of the magneto, showing the low-tension connections of the interrupter and the high-tension connections at the distributor, and *A'*, a side view, showing the high-tension connection by means of which the secondary current is led from the armature to the switch. The transformer coil and switch is shown at *B*, the battery at *C*, and the switch handle at *e*. The positions to which the handle is moved for running on the magneto or on the battery, or for cutting out the ignition entirely are marked on the switch end of the coil by the letters *M*, *B*, and *O*, respectively.

74. When the handle *e* is moved to the battery position, the switch terminals *f'* and *g'* are so connected that the magneto is grounded through *f* at *g* and is therefore inoperative. At the same time, connections are made from the terminal *j'* on the switch, through the primary winding of the induction coil and through the battery interrupter on the magneto, by way of the terminals *k'* and *k*. The battery current flows

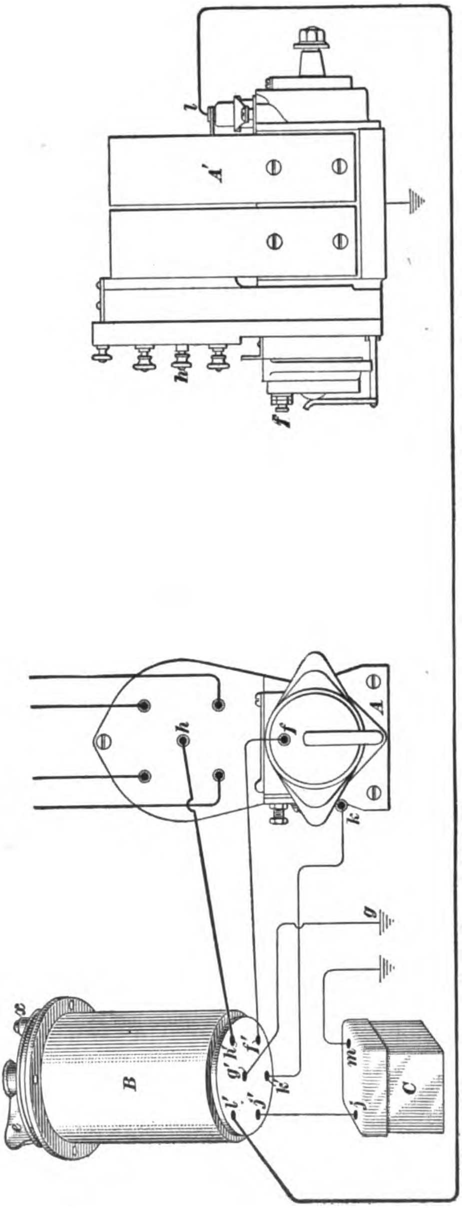

FIG. 31

through these connections and back to the terminal *m* on the battery by way of the magneto frame and the ground. Opening the battery circuit by the battery interrupter induces a high-tension current in the secondary winding of the induction coil, and this current flows, by way of the terminal *h'* on the switch, to the central terminal *h* on the distributor.

When the switch handle is in the magneto position, the battery circuit is opened, rendering the battery inoperative; also, the connection between the switch terminals *f'* and *g'* is broken, so that the primary current from the magneto flows from the primary winding on the armature through the magneto interrupter and back to the armature by way of the magneto body and the armature core. At the same time, the switch terminals *l'* and *h'* are connected, and the high-tension current induced in the secondary winding of the armature is carried from the terminal *l* on the magneto, through the switch, to the central terminal *h* on the distributor. Placing the switch handle in the off-position grounds the primary circuit of the magneto and also opens the battery circuit; hence, no current flows from either source and the ignition is completely cut off.

The coil *B* used in this system is of the non-vibrator transformer type, but it is provided with a vibrator, or interrupter, that can be operated by pressing the button *x*. This interrupter forms a part of the battery circuit and by means of it, this circuit can be closed and opened by hand and the engine started on the spark, provided a combustible mixture has been drawn into the cylinder that is ready to be fired.

DOUBLE IGNITION SYSTEMS

DEFINITIONS

75. **A double ignition system,** as the name implies, consists of two entirely separate and distinct systems, either one of which may be used wholly independent of the other. As in the dual system, two sources of current are employed. These may be either a magneto and a battery or a direct-current dynamo and a battery. However, the double system differs from the dual system in that two sets of spark plugs are used. One set is connected in the magneto or dynamo circuit, and the other set in the battery circuit. The two circuits are brought together at a switch on the dash of the automobile, and they are connected in such a manner that ignition may be obtained either by the generator with one set of spark plugs or by the battery with the other set of spark plugs, or it may be obtained by the generator and battery acting together with both sets of spark plugs. The desired connections are made by moving the switch handle to the correct position. In some double systems, a regular high-tension magneto and a dry-cell battery or a storage battery are used for generating the current; in other systems, a direct-current dynamo and a battery are employed. In either case, the generator or the battery may be used for ignition with the other circuit entirely removed from the engine.

DOUBLE SYSTEM WITH MAGNETO AND BATTERY

76. Bosch Double System.—In the Bosch double system of ignition, a regular high-tension magneto, such as is used for single ignition, supplies current for one set of spark plugs and either a storage battery or a dry-cell battery supplies current for the other set. The magneto and battery circuits are brought together at the switch, which is incorporated in the induction coil for the battery circuit and located on the dash of the automobile. A single coil is used for all the cylinders, and a combined timer and distributor is connected in the battery circuit for interrupting the primary current and distributing the secondary current to the spark plugs. The magneto primary current is of course interrupted in the regular way by the magneto interrupter, and the secondary current generated in the magneto is distributed by the magneto distributor, as in a single ignition system.

77. An end view and a cross-section of the coil used with the Bosch double system are shown in Fig. 32. As illustrated, the coil is in position on the dash *a* so that the switch can be operated from the driver's seat. The switch is manipulated by the handle *b*, which turns the coil cover *c* and thus moves the coil *d* through a pin connection, not shown in the illustration. The movable switch plate *e* carries the terminals from the coil; therefore, the contacts can be made to register with similar contacts on the stationary plate *f*. The desired connections are made by rotating the coil *d* by means of the cover *c*, and thus causing the different switch contacts on the plates *e* and *f* to engage. The coil proper consists of a cylindrical iron core, on which are wound the primary and secondary

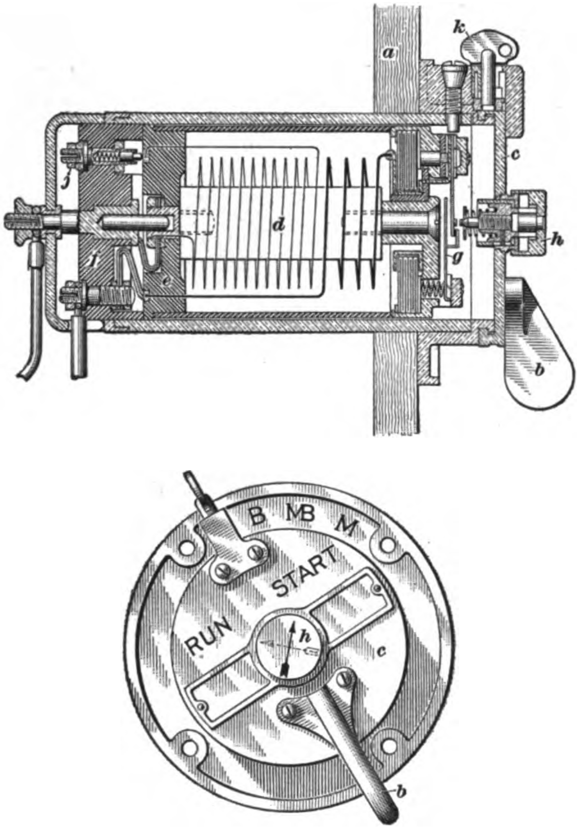

FIG. 32

windings. The primary winding is connected at one end to a contact segment on the plate *e*, and at the other end to the vibrator blade *g*, through which it is grounded. The secondary wire is connected at one end to the contact segment, through which the current flows to the distributor, and at the other end to the ground connection. The purpose of the button *h* is to start the engine on the spark. When the switch handle is either in the battery position or in the magneto-battery position, a pressure on this button induces a high-tension current which is sent to the distributor through the terminal *j*. The switch positions are marked on the face of the coil as follows: The off-position is marked *O*; the battery position, *B*; the position for operating both battery and magneto at the same time, *MB*; and the magneto position, *M*. The switch is provided with a locking key *k*, by means of which it may be locked in the off-position so as to prevent unauthorized use of the engine.

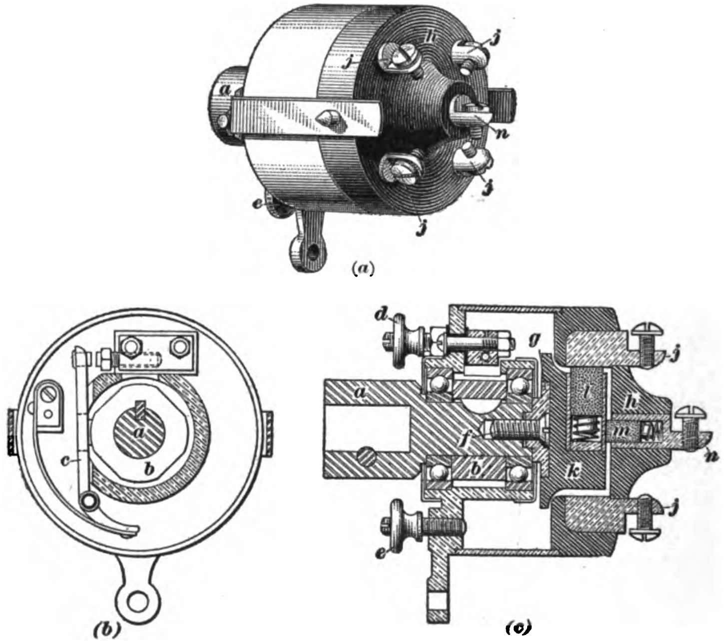

FIG. 33

78. The combined timer and distributor used in this system is illustrated in Fig. 33, (*a*) being an external view; (*b*), a cross-section; and (*c*), a longitudinal section. The timer proper is operated at the same speed as the cam-shaft by the sleeve shaft *a*, which carries the steel cam *b*. The cam has four lobes, or projections, that raise the lever *c* four times per revolution, or once for each working stroke of a four-cylinder, four-cycle engine, thus breaking the primary circuit and producing a spark at the required time. The timer is connected to the battery wire at the binding post *d* and is grounded at *e*, so that the lever *c* forms part of the battery circuit when the switch handle of the coil is in the battery position. The distributor part of the device is also driven at cam-shaft speed, being attached to the shaft *a* by the screw *f* and the plate *g*. The distributor consists essentially of the disk *h*, which contains four terminals *j* arranged regularly around the disk, and the rotating plate *k*, which carries a carbon brush *l*. A second carbon brush *m* extends from the central distributor terminal *n* to the movable brush *l*, which is enclosed in a rectangular brass tube. When in operation, the high-tension current is carried to the brush *l* through the brush *m*, and from *l* it is sent successively to the terminals *j*. As the plate *k* rotates, the brush *l* is brought into contact with the terminals at the same instant that the primary circuit is broken by the timer; therefore, the current is transmitted to the spark plugs in the proper order.

79. Wiring Diagram for the Bosch Double System. The wiring diagram for the Bosch double ignition system is illustrated in Fig. 34. In view (*a*), the magneto is shown at *A*, the battery at *B*, the coil at *C*, and the timer-distributor at *D*. View (*b*) is a side view showing the coil in position on the dash. The wiring connections are such that, when the switch is in the off-position, the battery circuit through the terminal *a* is broken and the magneto circuit is grounded through the terminal *b*. Both circuits are thus made inoperative, so that no spark is formed and all ignition is cut off. When the switch is placed in the battery position, the magneto remains grounded, but the battery circuit is closed through the terminals *a* and *c*; therefore, a complete circuit is formed through the dash coil, the timer-distributor, and the ground. It is thus evident that a current will be produced in the secondary winding of the coil when the battery circuit is broken by the timer. This high-tension current flows by way of the terminal *d* to the distributor, from which it is transmitted to the battery spark plugs *e*. With the switch in the battery-magneto position, the battery circuit operates as just described and the magneto ground circuit is broken, hence the magneto also

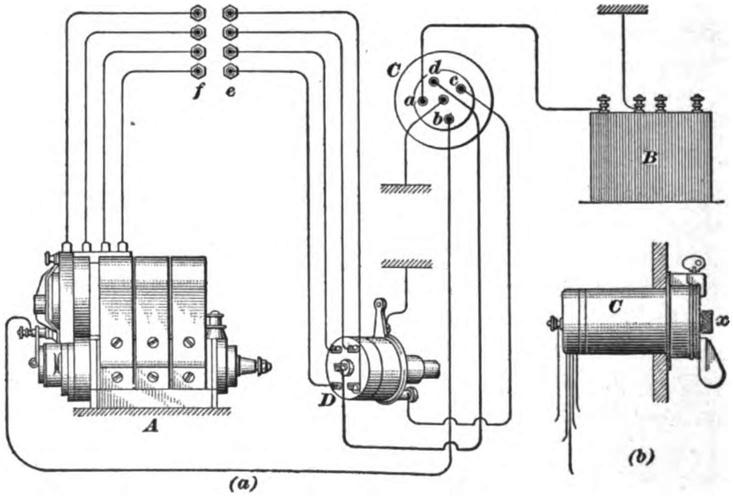

FIG. 34

produces a high-tension current. The current from the magneto is generated and transmitted to the magneto spark plugs *f* in exactly the same manner as the current in the independent, or single, ignition magneto. Under these conditions, a spark is produced in both sets of spark plugs at the same instant. With the switch in the magneto position, the magneto operates, but the battery circuit is broken so that sparks occur only in the spark plugs *f*.

80. In an automobile equipped with the Bosch double ignition system, the engine is started on the spark by pressing the button *x* with the switch in the battery or the magneto-battery position, provided, of course, that the rotor of the distributor is in contact with the distributor segment connected to the spark plug in the cylinder that is at that instant on its power stroke. A pressure on this button completes the battery circuit through the vibrator blade *g*, Fig. 32, and thus produces the required spark.

DOUBLE SYSTEM WITH DYNAMO AND BATTERY

81. Since the advent of the electric self-starter, which requires the services of a dynamo and a storage battery, there has come into use a double ignition system that employs a direct-current generator and a storage battery in one circuit and a set of dry cells in the other. In this system, the two circuits are entirely independent of each other, being brought together at a switch, by means of which either one may be put into operation.

For ordinary running, the ignition current is obtained either from the dynamo or the storage battery, which is connected by the method known as "floating the battery on the line." At low speeds, say when the engine is running at less than 300 revolutions per minute, the current comes from the storage battery; at higher speeds, it comes from the dynamo. Besides supplying most of the current for ignition, the dynamo automatically charges the storage battery in the manner employed with the "battery floated on the line." The dynamo, of course, generates a low-tension current, so that an induction coil is required to produce a current with a voltage high enough to create a spark in the spark plug. The dry-battery circuit is used as an auxiliary, and it is switched on only when, in case of accident, or for some other reason, the dynamo circuit cannot be operated. The dry-battery circuit usually contains an independent coil and distributor; therefore, it can be completely removed without affecting the other circuit.

82. In the type of double system under discussion, the storage battery is commonly used to supply current for electric lighting and for operating an electric self-starter. For starting without hand-cranking, the dynamo is temporarily and automatically transformed into a motor, which, when set in operation by current from the storage battery, rotates the engine until it commences to move under its own power.

MISCELLANEOUS IGNITION SYSTEMS

TWO-POINT MAGNETO SYSTEM

83. In the **two-point,** or **two-spark, magneto ignition system,** there is employed a high-tension magneto that will deliver a spark to two spark plugs at the same instant. In order to make use of this system, an automobile engine must be provided with two separate sets of spark plugs; that is, two spark plugs in each cylinder. Two sparks can then be made to occur in each cylinder at the same instant, and the combustible mixture will be ignited at two points instead of one, as in the single-spark system; also, the length of time required for total inflammation of the charge will not be so great. In order to secure the best results, the spark plugs should not be located close together, but should be separated by a distance of at least one-half of the entire width of the combustion chamber. The object of thus locating the spark plugs is to place them in the center of practically equal volumes of gas, so that the spread of flame throughout the whole charge will be as rapid as possible. Decreasing the length of time required to burn the charge also decreases the spark advance necessary and hence saves power, because, when the spark is advanced, ignition occurs before the end of the compression stroke, so that the charge has begun to burn and expand while it is still being compressed. Thus, the advantage claimed for the two-point ignition over the single-point system is that the power developed by the engine is increased on account of the more rapid inflammation of the charge and consequent less advance of the spark.

84. Construction of Magneto.—The magneto used in the two-point system of ignition is constructed along the same lines as the ordinary single-spark, high-tension magneto, the only difference being that there is used a double distributor, which, of course, requires special electrical connections to the armature. The distributor is of double thickness, so that two sets of distributor terminals can be accommodated side by side. For a four-cylinder engine, there are eight distributor terminals; for a six-cylinder engine, twelve terminals; etc. In one make of magneto, the desired result is obtained by connecting the two ends of the secondary winding to two segments located opposite each other on the collector ring. Two collector brushes are provided, one being connected to the inner half of the distributor by a conducting bridge similar to that used on single-spark magnetos, and the other to the outer half by a cable passing around the magnets. These brushes collect the high-tension current at the same instant and deliver it to the distributor. The distributor is provided with two rotating arms, or brushes, insulated from each other, that deliver the current to the two sets of terminals. Two safety spark gaps are used in this magneto.

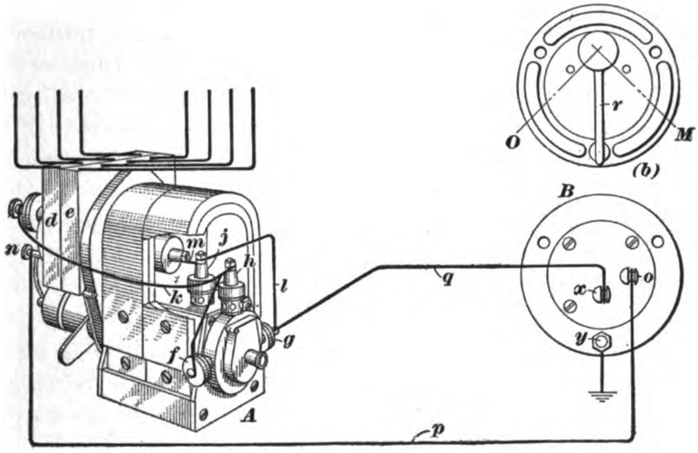

(a)

FIG. 35

85. Wiring Diagram for the Bosch Two-Point Ignition.—The wiring diagram for the Bosch two-point ignition system as applied to a four-cylinder engine is illustrated in Fig. 35. In view (*a*), the high-tension magneto, with a portion of the magnets removed so as to expose the connections, is shown at *A*, and the switch at *B*. In this view is shown the back of the switch *B* with the magneto and ground connections, while in view (*b*) is shown the face of the switch. The double distributor, with the high-tension cables running to the two sets of spark plugs, is located at *d* and *e* on the magneto, and the two collector brushes that take high-tension current from the armature collector ring are located at *f* and *g*. The safety spark gaps are shown at *h* and *j*, one being connected in each secondary circuit for the protection of the armature winding. The collector brush *f* is connected by way of the safety spark gap *h* to the distributor half *d* by the cable *k*, and the collector brush *g* is connected to the distributor half *e* by way of the safety gap *j* by the connections *l* and *m*.

The switch connections are rather simple. The switch terminal *o* is connected to the magneto interrupter *n* by the primary cable *p*, and the switch terminal *x* is connected to the collector brush *g* by the high-tension cable *q*; the switch terminal *y* is grounded. When the switch handle *r* is placed in the position indicated in view (*b*), the collector brush *g* is grounded through the terminal *y*, view (*a*), and no current flows to the half *e* of the distributor. Under these conditions, high-tension current flows through only the cable *k* to *d* and is transmitted to but one set of spark plugs. With the switch handle placed in the position marked *O*, the magneto interrupter *n* is grounded and no high-tension current is produced; this, therefore, is the off-position. With the handle placed in the position marked *M*, no connections are made through the switch, and current is transmitted to both halves of the distributor over the cables *k* and *l*, so that sparks occur in both sets of spark plugs. Thus, by placing the switch handle in any one of these three positions, the ignition may be cut out entirely, one set of spark plugs may be operated, or both sets may be operated.

DUPLEX IGNITION SYSTEM

86. In the so-called **duplex system of ignition**, the current is supplied by a high-tension magneto and a battery so connected that both make use of the same circuit at the same time. The primary and secondary windings of the magneto armature are employed to change the battery current to a current of high electromotive force. Therefore, no separate induction coil is used, but a kick coil with a single winding is connected in the battery circuit for the purpose of strengthening the primary current.

87. The magneto used in the duplex system of ignition is of the ordinary shuttle-wound, high-tension type, being provided with two binding posts on the cover of the interrupter instead of one, as in other systems. A front view of the Bosch duplex magneto, which is designed for use in this system, is shown in Fig. 36, the timing control lever *a* and the interrupter cover *b* being removed in order to expose the interrupter mechanism. The timing control lever *a* contains the cams *c*, upon which the interrupter lever *d* strikes to separate the contact points *e* and *f*; also, the interrupter cover *b* is fitted with two contact segments *g* and *h*, which are connected to the two binding posts on the cover, and which make contact with the carbon brushes *k* and *l*. One of the binding posts is shown at *j*, but the other is hidden by the cover *b*. One brush *k* is electrically

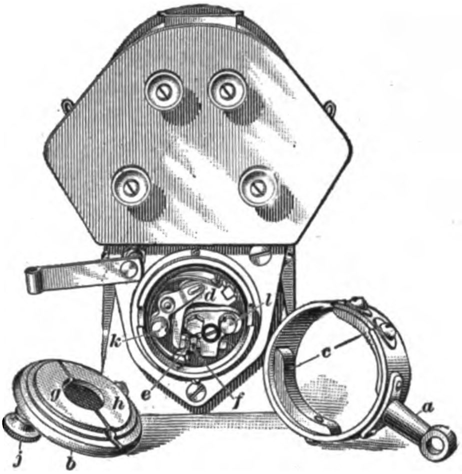

FIG. 36

connected to the interrupter lever *d*, while the other brush *l* is connected to the insulated side of the interrupter, which leads to the primary winding of the magneto armature. When in operation, the positive terminal of the battery is connected to the binding post leading to the contact segment *g*, and the negative terminal to the binding post leading to segment *h*; thus, when the armature of the magneto is stationary and the interrupter points are closed, the current will flow from the positive terminal of the battery to the contact segment *g* and the brush *l*, and thence through the interrupter and back to the negative terminal of the battery by way of the brush *k* and the segment *h*. When the interrupter points are separated, current will flow from the contact brush *l* through the primary winding of the armature and back to the battery through the brush *k*; therefore, by quickly breaking the circuit at the interrupter, there will be induced in the secondary winding a high-tension current that will have sufficient electromotive force to cause a spark to occur in a spark plug, provided the rotor of the distributor makes contact with a distributor segment connected at that instant to the plug. An engine employing this system can be started on the spark by pressing a push button, provided the engine has come to rest in such a position that the interrupter is open. The battery circuit is thus broken and the required high-tension current is produced in the secondary coil of the magneto armature.

When the magneto and the battery are both in operation, the contact brushes *l* and *k* rotate with the armature; therefore, the battery current changes direction through the primary winding twice during each revolution. At the same time, an alternating current is generated in the primary winding of the magneto armature, and it also changes direction twice during each revolution; however, it always flows in a direction opposite that in which the battery current flows. On account of this, the battery current opposes the magneto current; hence, when the magneto is running at a low rate of speed, the high-tension current induced in the secondary winding of the armature is due to the interruption of the battery current, which, at that instant, is stronger than the magneto current and therefore predominates in the primary winding. When the magneto is running at a high rate of speed, the magneto current predominates; and, when the interrupter points are separated, this current is stopped and the battery current is sent through the primary winding in a direction opposite that in which the magneto current had been flowing. This has the same effect as a reversal of current, so that a current with a voltage high enough to produce a spark is induced in the secondary winding. When the battery is cut out of the circuit entirely, the high-tension current is generated in the regular way by the magneto.

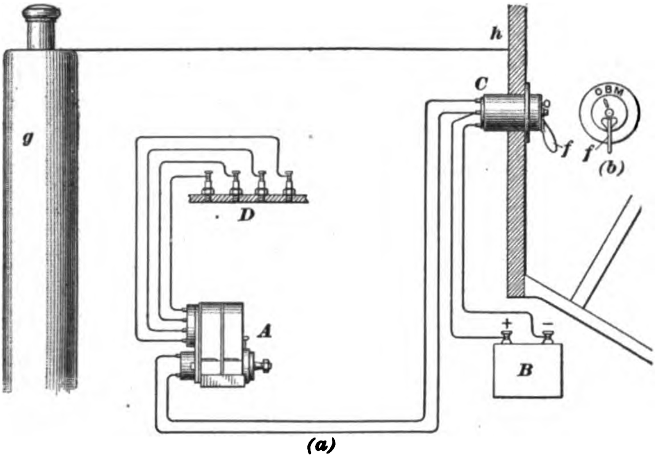

Fig. 37

In this system, the primary purpose of the battery is to supply current to the armature winding in order to supplement the magneto current when starting the engine by hand-cranking and to supply current for starting on the spark.

88. The wiring diagram for the Bosch duplex system is illustrated in Fig. 37. In view (*a*) the high-tension magneto is shown at *A*, the battery at *B*, and the combined switch and kick coil at *C*; also, the spark plugs are shown at *D*. View (*a*) shows the coil in its horizontal position on the dash *h*, and view (*b*) is a view of the face of the switch. The radiator of the engine is shown at *g* and the dash at *h*, in order to give an idea of the relative location of the different parts of the system.

When the switch handle *f* is moved to the off-position, the battery circuit is broken and the two wires leading to the magneto are connected together at the switch, thus short-circuiting the magneto current. This cuts out all ignition, for which reason no spark is formed. When the handle is placed in the magneto position, the battery circuit remains broken at the switch, but the wires leading from the magneto are separated so that the primary current generated in the armature flows through the interrupter and generates a high-tension current, which, in turn, produces the necessary spark. In this case, the spark is produced by the magneto alone. With the handle in the battery position, the battery is connected to the magneto, and the spark is generated by the interruption of both the magneto current and the battery current, as previously explained.

TRANSMISSION AND CONTROL MECHANISM

(PART 1)

FRICTION CLUTCHES

CONSTRUCTION AND OPERATION

PURPOSE OF CLUTCHES

1. In an automobile driven by an internal-combustion engine, means must be provided for connecting the engine to the transmission gearing or disconnecting it from this gearing, either while the gears are being shifted or when the car is to be stopped with the engine running. This is necessary in the first case because, with the ordinary form of transmission, or speed-changing, gears, the engine must be disconnected from the gearing while the speed is being changed in order to make a smooth and noiseless shift and to avoid injury to the mechanism. In the second case, it is necessary when it is desired to stop the car for a short time without stopping the engine or when the car must be stopped suddenly, as in an emergency. For the purpose named, a **friction clutch** of some suitable form is employed in nearly all cars. The clutch forms part of the engine in most cars, but in others it is incorporated in the same housing with the gears by which the speed of travel of the car is regulated. Cars containing a so-called friction transmission do not need a clutch, as its function is performed by separating the different members of such a transmission.

2. Some of the most important qualifications that the friction clutch must fulfil in order to give satisfactory operation in automobile service are as follows:

1. It should engage without seizing and jerking the car.
2. It should hold without slipping after the car has been started and the clutch is in full engagement, except under very unusual conditions in which the speed of rotation of the road wheels is very suddenly checked.
3. It should release instantly, without dragging the driven parts around, as soon as the disengaging mechanism is operated.
4. It should be of such form that the driven side will have a minimum tendency to keep rotating by its own momentum after the clutch is released. In other words, the flywheel action of the part of the clutch that is connected to the power-transmitting mechanism should be a minimum.
5. It should not require constant adjustment and attention to keep it operating properly.
6. All parts should be of proper strength and possess lasting qualities.

3. The friction clutches used in automobiles are of several general types, depending on the manner in which the required friction is produced. These types, or classes, are the *cone clutch*, *disk clutch*, *expanding clutch*, and *contracting clutch*. In each case, however, an adequate device must be employed for bringing the members of the clutch in contact.

In the **cone clutch,** the necessary friction is produced by forcing two cone-shaped members together, one within the other, so that the conical surfaces come in contact. One member of the clutch is driven by the engine while the other member is attached to the propeller shaft or transmission shaft.

The **disk clutch** makes use of a number of plates, or disks, that are forced together. One set of disks is attached to the engine shaft and the other set to the propeller shaft or transmission shaft. The large number of disks forms a sufficiently large contact surface to produce the required friction when the plates are pressed together.

In the **expanding clutch,** two cylindrical members are used, one within the other. The diameter of the inner member can be increased, thus forcing it outwards against the outer part and causing the desired friction.

The **contracting clutch** differs from the expanding clutch only in that the outer member is of variable diameter, which may be decreased. The outer member can thus be tightened about the inner one and the required friction produced.

CONE CLUTCHES

4. Ordinary Form of Cone Clutch.—A cone clutch of the form used on a large number of automobiles is shown in Fig. 1. In view (*a*), the members are shown separately while in (*b*) they are shown in engagement. The internal cone *a* is free to slide on the ends of the transmission shaft and crank-shaft, both of which extend into it, but it is prevented from rotating on the transmission shaft by the use of feather keys *b*. The external cone *c* is formed in the flywheel of the engine and rotates with the crank-shaft, to which it is rigidly attached. When these two members are brought together with the surface *d* of the internal cone in contact with the surface *e* of the external cone, as in (*b*), they are said to be in engagement. If the external cone *c* is rotating and the internal cone *a* is engaged with it, the friction of these surfaces against each other will cause the external cone to transmit a turning effort, or *torque*, to the internal cone, and thus carry this cone around with it. The extent of this tendency to drive the internal cone is proportional, at least in a measure, to the pressure between the conical friction surfaces at *d* and *e*. On account of the conical shape of the friction surfaces, there is a wedge-like action that gives a pressure between them that is much greater than the force that pressed the driven cone toward and against the driver. For a given force acting to press the inner cone toward the outer one, the more nearly the conical surfaces approach a cylindrical form, the greater will be the pressure between them.

5. The cone clutch shown in Fig. 1 is employed in model 15 of the Northway power plant. The internal cone *a* is of

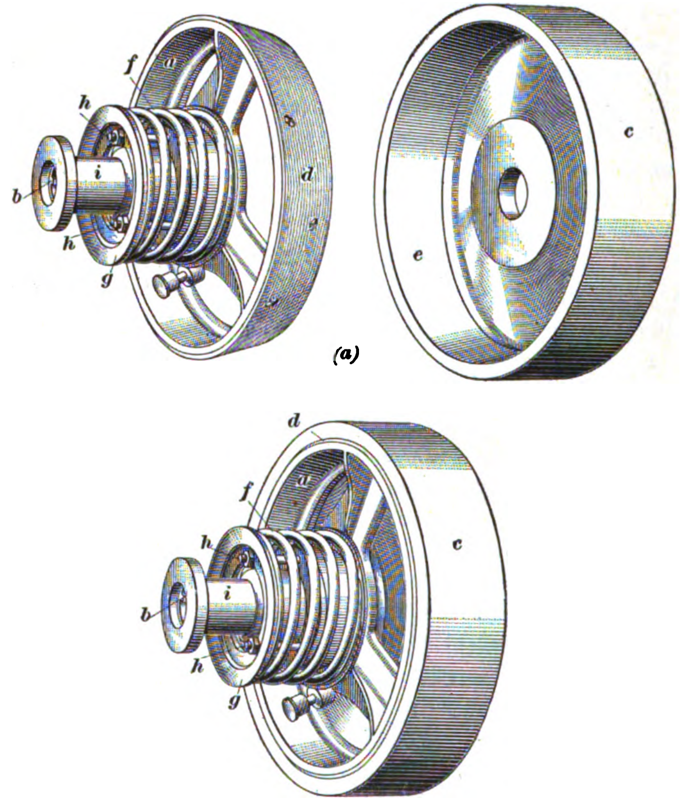

(a)

(b)

Fig. 1

aluminum and is faced with leather while the external cone, or flywheel, *c* is of cast iron. The leather-faced cone is used on account of the greater frictional resistance to sliding between leather and metal than between metal and metal. When the clutch is engaged, as in (*b*), the members are held in contact by the spring *f*, which is in compression between the internal cone *a* and a spring seat, or stop, *g*. The seat *g* is prevented from sliding in the direction of the axis of the shaft by three bolts *h* that extend through the web of the internal cone and are secured at their inner ends to a sleeve on the end of the crankshaft. The sleeve prevents the bolts from moving endwise and thus holds the seat *g* always at the same distance from the external cone *c*. The spring is compressed and the clutch released by moving to the left the sleeve *i*, which is attached to the internal cone *a*, and hence withdraws this cone from the external cone *c*.

By the use of this device, the car can be started gently by allowing the inner cone to become engaged slowly with the outer one and permitting the latter to slip around over the driven cone, but at the same time gradually starting it to rotate and increasing its speed of rotation. The rotation of the driven cone is of course resisted by the force required to start and move the car. The strength of the clutch spring should be sufficient to force the cones together hard enough to prevent slipping under ordinary conditions after the pressure employed in holding the cones apart has been removed.

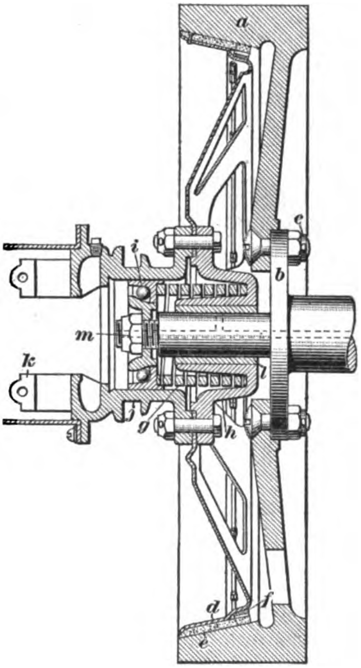

FIG. 2

6. In the cone clutch, the closing spring is often enclosed instead of being in plain view as in the clutch shown in Fig. 1. An example of a clutch having the spring enclosed is that used on the Studebaker, model 35, car. This clutch is shown in section in Fig. 2. The external cone is formed in the flywheel *a*, which is bolted to a flange *b* on the crank-shaft by means of the bolts *c*. The internal cone *d* is of stamped steel and is faced with leather, as shown at *e*. Under the leather face of the cone is a series of flat springs *f* that allow the leather surface to engage gently with the inside of the flywheel. These springs are arranged in a shallow groove on the outside of the cone and are of such form that they slightly lift the leather when the clutch is disengaged, so that certain portions of the leather come in contact with the flywheel rim first. Unless some external force is applied to prevent it, the clutch is held in engagement by the heavy coil spring *g* that is compressed between the hub *h* of the inner cone and a thrust bearing *i* carried on the end of the crank-shaft. The clutch is disengaged by forcing the hub *h* to the left by means of a yoke that surrounds the groove *j* and is connected by suitable levers to a pedal. When the pedal is pressed forwards, the spring is compressed and the inner cone moved back from the flywheel. The part *h* is connected to the propeller shaft by a universal joint that has a sliding connection, which allows the inner cone *a* to be drawn back without changing the position of the propeller shaft. Part of the universal joint is shown at *k*. When the clutch is disengaged, the hub *h* turns on a bushing *l* and on the thrust bearing *i*. The clutch spring may be tightened or loosened by turning the nut *m*.

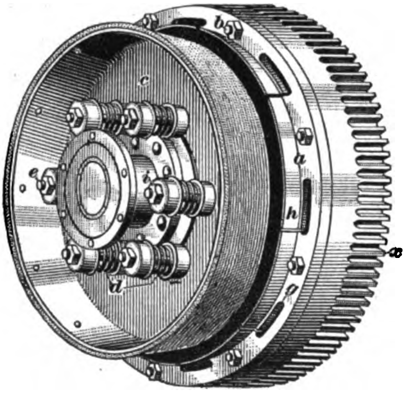

FIG. 3

7. Multiple-Spring Clutch.—Instead of being provided with a single clutch-closing spring, some clutches have several comparatively small springs arranged at equal angular distances around the clutch shaft. An external view of the Cadillac cone clutch, which is of this type, is shown in Fig. 3

and a sectional view is shown in Fig. 4. Like parts in the two views are lettered the same as far as possible; hence, both illustrations should be referred to in connection with the following description.

In this clutch, the external cone is a malleable-iron cast ring *a* that is bolted to the flywheel by means of stud bolts *b*. The inner cone *c* is of pressed steel and is leather faced. It is held in engagement by six springs *d*; the spring bolts *e* extend through the web of the inner cone and are secured to a flange *f* that is not free to slide on the engine shaft, so that when no external force is applied, the two members are drawn together. The clutch is disengaged by forcing the inner cone rearwards against the resistance of the springs.

A feature of this clutch is the construction of the ring *a* that forms the outer cone. The conical part of this ring to the rear of the flange is split at eight points, thus dividing it into eight sections. At the end of each section the ring is slotted, as at *g*, and a part *h* is sprung inwards. This part forms a spring that causes the clutch to take hold gradually when the inner cone is pressed inwards. The clutch springs are adjusted by varying the tension on them by means of the nuts *i*.

8. The operating mechanism of the clutch is shown in Fig. 4. A pressure forwards on the clutch pedal forces the thrust bearing *j* and the sleeve *k* toward the rear of the car. This movement of the sleeve *k* withdraws the inner cone *c* from the outer cone *a*, thus compressing the springs *d* and releasing the clutch. Normally, when no pressure is exerted on the pedal, the springs *d* hold the cones in engagement. The shaft *l* is an extension of the engine crank-shaft, but the bearing *m* that carries the flange *f* rotates with the inner cone *c*. The bearing *m*, and hence the flange *f*, is prevented from moving endwise by the thrust bearing *n*. The coupling *o* allows the sleeve *k* to slide without sliding the transmission shaft.

Connected with this clutch is a **clutch brake,** which is used for decreasing the speed of the driven member of the clutch when the cones are separated and the transmission gears are disengaged, as when changing speed from a low to a higher

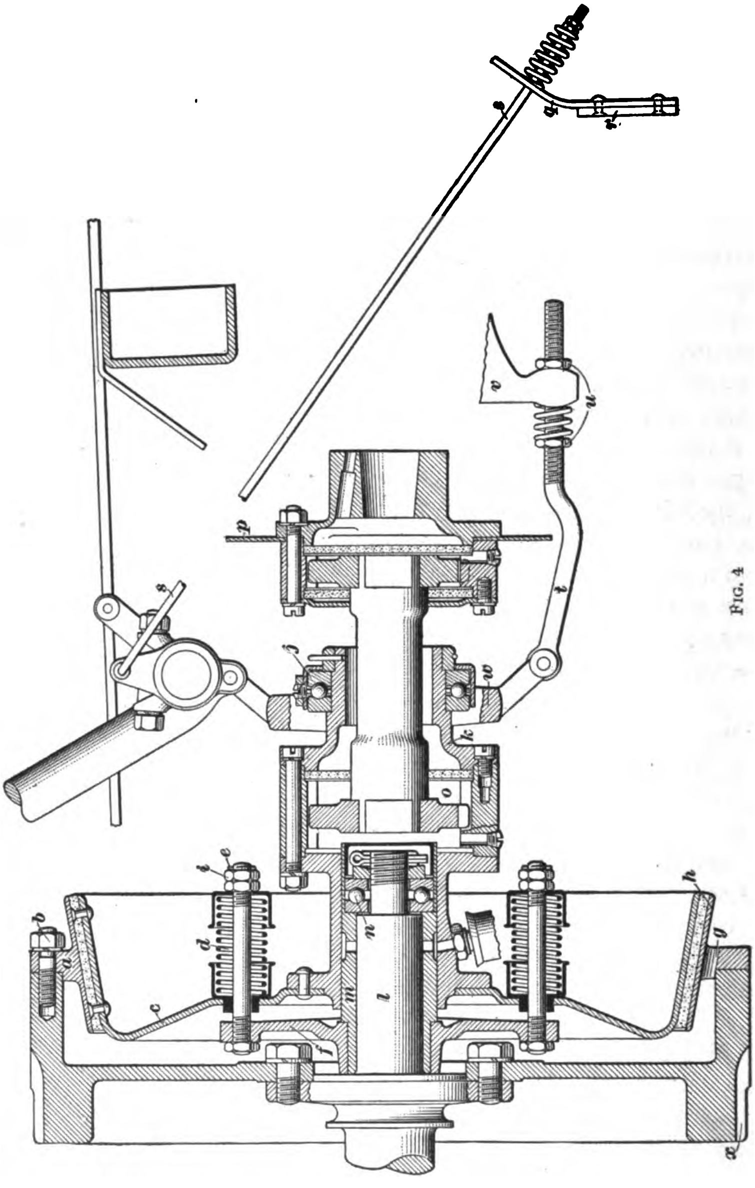

FIG. 4

gear. The brake consists of the metal disk *p*, which revolves with the transmission shaft, and a brake shoe *q* faced with some antifriction material *r*. For the sake of clearness, the brake shoe is here shown at some distance from the disk *p*, but in actual practice it is located close to the disk; hence, when the clutch is disengaged, a further movement of the pedal draws the antifriction material against the disk by means of a rod *s*, and thus decreases the speed of the free member of the clutch.

The rod *t* is a stayrod by means of which the point where the clutch pedal in its downward course begins to throw out the clutch may be adjusted. This adjustment is made by screwing up the nuts *u*, thus shortening the distance between the bracket *v* and the yoke *w*, or by unscrewing these nuts with the opposite effect. Screwing the nuts right-handed swings the yoke *w* on its contact fingers, which are located on each side of the center of the yoke, and rotates the clutch pedal in a clockwise direction, raising it higher above the floor boards. This adjustment causes the action of the pedal to take effect at an early point in its downward movement. The pedal may be made to act at a later point by turning the nuts in a left-hand direction.

The outer circumference of the flywheel is provided with teeth *x* with which a gear of the electric self-starting device engages when the engine is being cranked by means of the starter.

9. Reversed Cone Clutches.—In the cone clutches thus far described, the cones are so arranged that engagement is made when the inner cone is pressed forwards, or toward the flywheel, and the external cone is usually the rim of the flywheel. In the **reversed cone clutch,** engagement is made when the inner cone is forced in the opposite direction, or to the rear, and the external cone must be a separate piece bolted to the flywheel.

An example of a reversed cone clutch is shown in Fig. 5, which is a sectional view of the clutch used on the Studebaker "20" automobile. The internal cone *a* is of aluminum and is leather faced, the leather being held in place by rivets *b*. The external cone *c* is a separate casting bolted to the flywheel *d* by

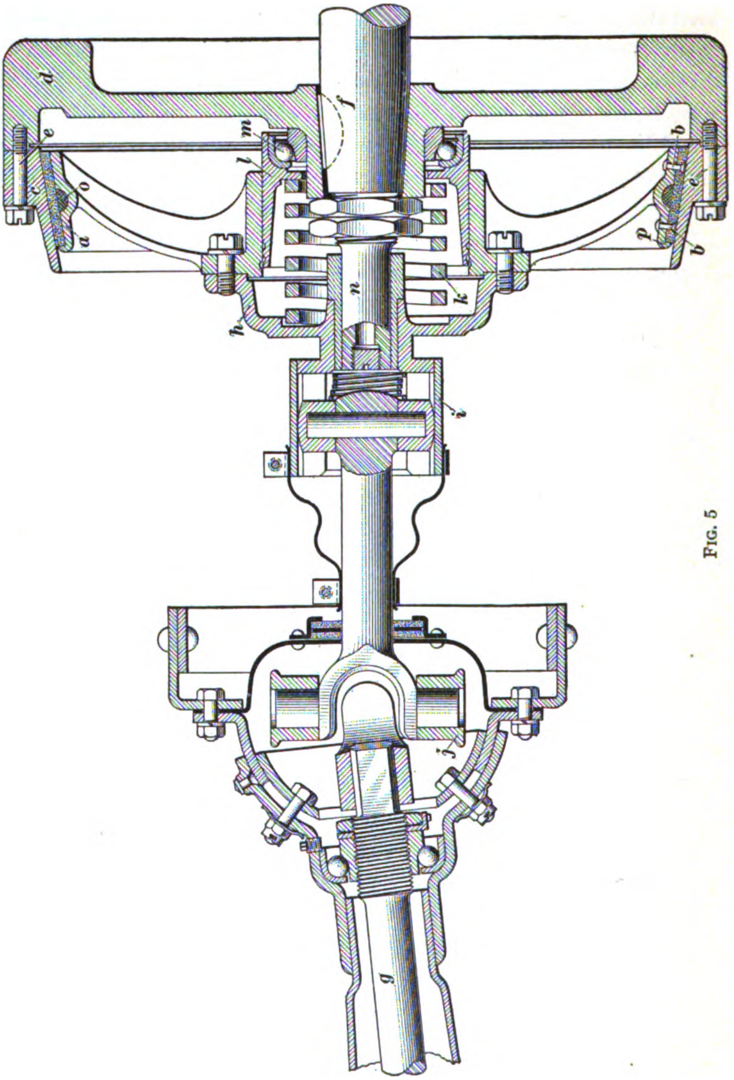

FIG. 5

bolts *e*. The flywheel in turn is keyed to the engine crankshaft *f* and hence rotates with it. Motion is transmitted from the inner cone *a* to the propeller shaft *g* through the hub *h*, a sliding joint *i*, and a universal joint *j*. When no external force is applied to prevent it, the clutch is held in the engaged position by the closing spring *k*, which is compressed between the inner part of the hub *h* and the cone sleeve *l*. A ball thrust bearing *m* between the end of the sleeve *l* and the web of the flywheel takes the thrust of the spring. The clutch is disengaged by forcing the hub *h* toward the flywheel, thus compressing the spring *k* and slipping the inner cone into the larger interior of the flywheel. As the clutch is released, the hub of the inner cone slides on the sleeve *l* and on the clutch shaft *n*. A sliding connection with the propeller shaft that permits this movement of the clutch is made by means of the sliding universal joint *i*. A gentle engagement of the members of the clutch is obtained by means of a rubber insert *o* that fits around the cone *a* under the leather face.

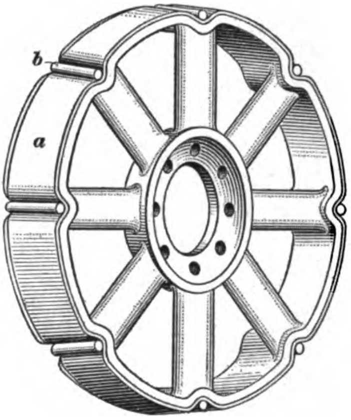

FIG. 6

10. Methods of Securing Clutch Facing.—Where leather is employed as a clutch facing, it is usually secured to the inner cone by means of copper belt rivets, the heads of which are countersunk in the surface of the leather. This means of fastening the clutch leather is illustrated at *b*, Fig. 5. An exception to this method is that used in the White cone clutch, the inner cone of which is shown in Fig. 6. In this clutch, the leather facing *a* is held in place by **T** bolts *b* that fit in grooves in the rim of the clutch. The grooves are deep enough to prevent the bolts from coming into contact with the inner surface of the flywheel. The **T** bolts extend through the clutch rim and are secured by nuts; these nuts in the illustration are hidden by the spokes of the clutch casting. This method is especially applicable to clutches that make use of material that does not rivet well, as, for example, asbestos fabric.

Sometimes a small radial flange is provided on the edge of the rim of the cone, as shown at *p*, Fig. 5, in order to help retain the facing and take some of the stress off of the rivets.

11. Devices for Securing Smooth Clutch Engagement.—In order to secure means of bringing a cone clutch into engagement gently, various methods of causing a part of the friction surface to come first into contact with the outer cone, and then later all the friction facing into engagement, have been put into use. A common device for eliminating more or less the tendency of the clutch to seize and jerk, is shown in Fig. 7 (*a*). In this view, the external cone is shown at *a*, a part of the metal of the internal cone at *b*, and the leather facing at *c*. A plunger *d* is set into the metal of the cone and is forced out by an expansion spring *e* against the inner side of the leather, its outward motion being limited by a cotter pin in the stem of the plunger. This presses out the portion of the leather that is over the end of the plunger, so that it stands higher than the other parts of the leather facing. Several of these plungers are used in the complete cone. When such a clutch is brought into engagement, the high portions of the leather facing first come into contact with the external cone; thus, the pressure against the leather is limited to the expansive force of the springs *e*. The clutch, therefore, does not grip suddenly and jerk.

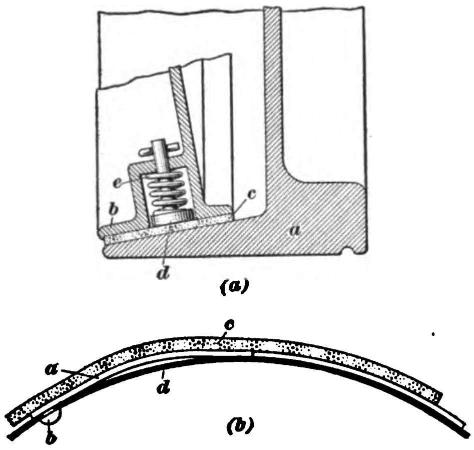

(*a*)

(*b*)

FIG. 7

In view (*b*) is shown the side view of the flat spring *f*, Fig. 2, which is largely used for securing a gentle engagement between the clutch members. The spring *a*, Fig. 7 (*b*), is usually secured to the cone by a single rivet *b* and is slightly bent as shown. As the clutch is engaged, the spring becomes flattened, thus allowing the members to come together gradually. The clutch leather is shown at *c*, and the pressed steel cone at *d*.

12. A gentle engagement of the members of a cone clutch is sometimes secured by cutting holes through the friction facing and inserting pieces of cork whose outer ends project slightly above the face of the leather. The cork, if of good quality, is easily compressed, so that it has about the same action as the facing forced out by the plunger. The tendency to cling is somewhat higher for the cork than for leather in the condition that ordinarily exists in service. Clutches fitted as just described are known as *cork-insert clutches.*

An example of a cone clutch fitted with cork inserts is that used on the Pope-Hartford car, the internal cone of which is shown in Fig. 8. Tapered pockets *a*, having a larger diameter at the bottom than at the top, are cored into the rim of the cone. The pieces of cork *b* are forced into these pockets under pressure and extend out through the holes in the leather *c* a distance of about $\frac{1}{16}$ inch. The clutch leather in this case is secured to the rim by the rivets *d*.

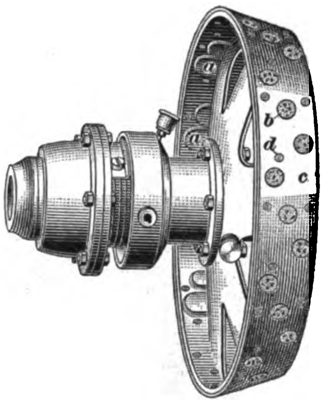

FIG. 8

13. The angle between the cone surfaces and the shaft, or axis, of the cones, is generally made as small as is possible without getting the cone surfaces so nearly cylindrical as to cause them to stick together unduly and thus prevent ready release of the clutch. The angle is generally about 11°.

DISK CLUTCHES

14. Principle of Disk Clutch.—In Fig. 9 is shown a simple form of **disk clutch,** which illustrates the principle on which clutches of this type operate. It consists of a driving shaft *a* and a driven shaft *b*, to which power is transmitted by the friction disks *c* and *d* when their flat adjacent surfaces are pressed together. If the friction surfaces are made entirely flat so as to cover the complete areas within the circles that form the outlines of the disks, the tendency is for the wear, due to slipping, to be more rapid toward the periphery than at and near the center of the disk. In order to obviate this undesirable feature, which reduces the amount of turning effort that can be transmitted from one disk to the other, the disks are hollowed out so that a ring is formed at the periphery of each disk. Although, when modified in this manner, the bearing surfaces are no longer in the form of disks, the name *disk clutch* is universally applied to clutches of this type. As the bearing surfaces are flat and are at right angles to the direction of the force that is applied to close them, the pressure between the friction surfaces, instead of being greater than the closing force, as in cone clutches, is equal only to the amount of the closing force. Therefore, for a given mean diameter, an equal extent of friction surfaces, and the same closing force, a single pair of frictional surfaces will not transmit as much turning effort in the disk type of clutch as in the cone type.

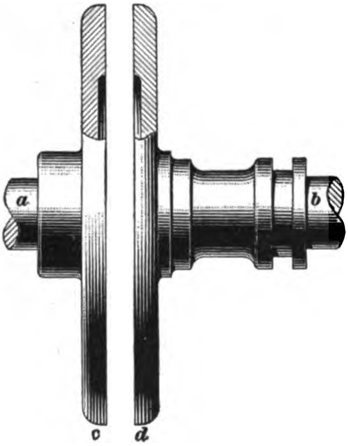

FIG. 9

15. In order to keep down the size of the disk clutch, as well as the closing force, a number of friction disks, or rings, are used in automobile practice. The multiplication of the friction surfaces in this manner increases the turning effort that the clutch will transmit in the same proportion as the number of pairs of frictional surfaces is increased. Thus, with two pair of frictional surfaces, the turning effort will be twice as great as with one pair, as shown in Fig. 9; provided, of course, the friction surfaces are of the same mean diameter and extent, have the same coefficient of friction, and are pressed together with the same pressure in each case. Thus, if there are thirty pair of friction surfaces, the clutch will transmit thirty times the turning effort that it would transmit with only one pair.

16. An idea of the extent of increase of frictional effect that is secured by increasing the number of pair of friction surfaces can be obtained by the following simple experiment: As shown diagrammatically in Fig. 10, lay together a number of sheets, or slips, of writing paper on a board or a box so that the ends of alternate sheets will overlap each other half way or more, and place a weight, as *a*, of ½ pound or more on top of the overlapping parts. The sheets are shown separated merely to make the illustration clear; they really touch each other. Grasp the free projecting ends *b* and *c* of the paper and pull the sheets apart in opposite directions, as indicated by the arrowheads, so that the overlapping sheets slip from between each other. Care should be taken not to lift or pull upwards so as to raise the paper and weight. First use two or three sheets; then increase the number of sheets to thirty or more. The amount of pull necessary to draw apart thirty sheets will be rather surprising at first. This pull, as was stated in Art. **15**, is proportional to the number of pair of surfaces that slide, or rub, over each other when the sheets are pulled apart. Clutches that are made up of a number of disks, or plates, are usually known as **multiple-disk clutches.**

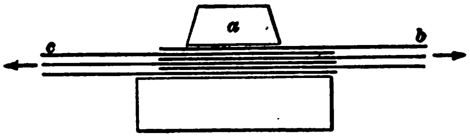

FIG. 10

Multiple-disk clutches may be divided into two general types, or classes, namely, **dry-plate clutches,** or those in which the disks require no lubrication, and **oiled clutches,** or those in which the disks are enclosed in an oil-tight case and run in a bath of oil.

17. Dry-Plate Clutches.—In the dry-plate clutch, lubrication is made unnecessary either by facing one set of disks with asbestos fabric on both sides or by making use of cork inserts. Both of these materials have good frictional qualities when used on steel. The asbestos fabric is usually composed of asbestos fiber and woven wire and is riveted to the plates. The asbestos is used on account of its good frictional qualities and its resistance to heat, while the wire is used to give the asbestos the necessary strength. The cork inserts in disk clutches serve the same purpose as in cone clutches; that is, they provide a means for obtaining a smooth and gradual engagement. When the clutch is engaged, the contact in cork-insert clutches is part cork on metal and part metal on metal, the proportion of each depending on the size and number of the corks.

The chief advantage of the dry-plate clutch is that it eliminates the dragging due to improper lubrication, by *dragging* being meant that the clutch fails to release properly when the clutch-operating pedal is pushed forwards.

18. A typical dry-plate clutch employing disks faced with asbestos fabric is that used in the Stevens-Duryea car. One model of this clutch is shown partly in perspective and partly in section in Fig. 11. The plates *a* and *b* and the driving member *c* are shown cut in half with the front halves removed in order to expose to view the inner parts of the clutch. The disks consist of six driving plates *a*, which are faced on both sides with quarter sections of woven wire and asbestos, and seven driven plates *b*. These disks are in reality rings and are provided with projections that engage with grooves in the driving and driven members of the clutch. The driving member *c* is a hollow cylinder provided with six grooves *d* that engage with the projections *e* on the driving disks *a* in such a manner that the disks are free to slide in the grooves but must rotate with the hollow cylinder.

The inner member *f* is also provided with six grooves *g*; these grooves engage with projections on the inner edge of the driven disks *b*, which are free to slide in the grooves but must rotate with the driven member *f*. This member is integral with the driven shaft *h*. Inside of the inner member *f* and surrounding the shaft *h* is the spider *i*, of which the ring *j* is an integral part. The clutch-closing spring *k* is contained within the spider *i* and is compressed between a shoulder in the outer end of the spider sleeve and a web *l* of the inner member *f*. The friction disks are confined between the ring *j* and a large nut *m* that is screwed on the inner member *g* and serves as a means of adjusting the pressure on the disks. The clutch is operated from a pedal through the yoke *n*.

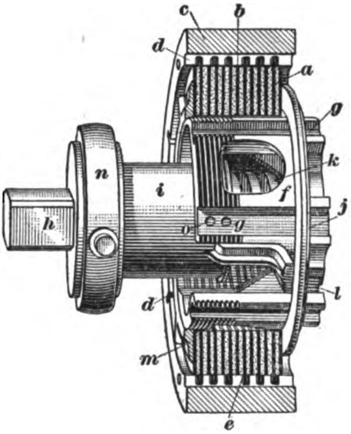

FIG. 11

19. When in operation on the car, the driving member *c*, Fig. 11, of the clutch is bolted to the flywheel of the engine and rotates with it, carrying around the driving plates *a*. The shaft *h* is coupled to the transmission of the car. Under ordinary conditions, that is, when the clutch pedal is not depressed, the spring *k* expands, forcing the sleeve *i* and the web *l* apart and moving the ring *j* and the adjusting nut *m* closer together. The disks *a* and *b* are thus forced together and the rotary motion of the driving disks *a* is imparted to the driven disks *b*. The driven plates *b* in turn cause the inner member *f* to revolve and this turns the shaft *h* that is coupled to the driving mechanism of the car. Thus, power is transmitted from the engine to the propeller shaft when the clutch is engaged. The clutch is disengaged by depressing a pedal that forces the yoke *n* forwards, or toward the web *l*, compressing the spring *k*. This movement forces the ring *j* and the nut *m* farther apart, thus relieving the pressure on the disks and permitting the driving plates *a* to revolve without turning the driven plates *b*. This disconnects the engine from the driving mechanism of the car and permits the motor to run freely.

A gradual engagement can be obtained by allowing the pressure of the spring to come gradually on the plates, so that the driven disks will slip at first and then gradually speed up until they have the same speed as the driving member. The clutch is adjusted by turning the nut *m* to the right or the left, thus increasing or decreasing the tension of the spring when in the engaged position.

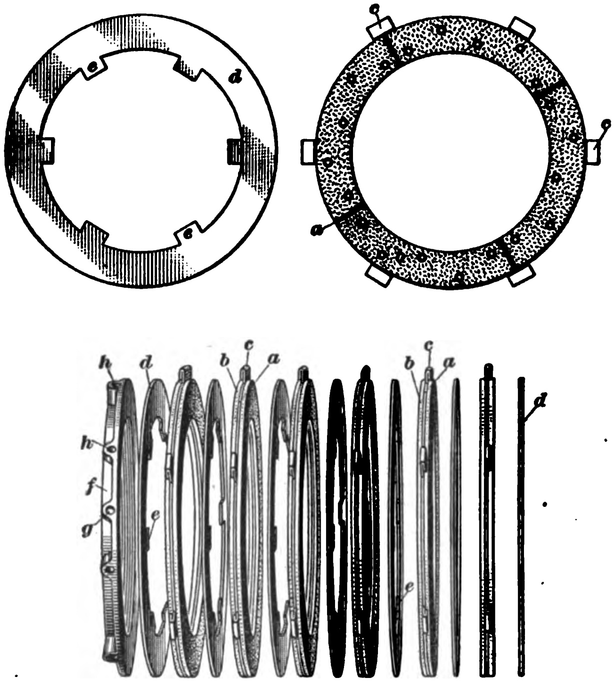

FIG. 12

20. The plates and adjusting nut of the Stevens-Duryea clutch are shown in detail in Fig. 12. Each driving disk is made up of a steel plate *a* faced on each side with wire-woven asbestos *b*, which is in four sections and is secured to the plate by means of copper rivets. The rivets are countersunk in the asbestos to prevent their heads from coming in contact with the adjacent plates. The projections for holding the disks in the cylindrical driving member are shown at *c*. The driven clutch plates *d* are of plain steel and have projections *e* on the inner circumference to prevent their turning on the driven member of the clutch. When the clutch is assembled, the adjusting nut *f* is locked in place by means of a lock pin that passes through a hole *g* in the nut and a corresponding hole in the inner clutch member. Several holes *o*, Fig. 11, are drilled in the inner clutch member, so that the nut can be locked in different positions. When turning the adjusting nut, it is necessary to give it one and one-sixth revolutions each time, so that the hole *g*, Fig. 12, will coincide with the holes drilled in the inner member of the clutch. Other holes *h*, which do not pass clear through the nut, accommodate a spanner wrench, by means of which the nut can be turned.

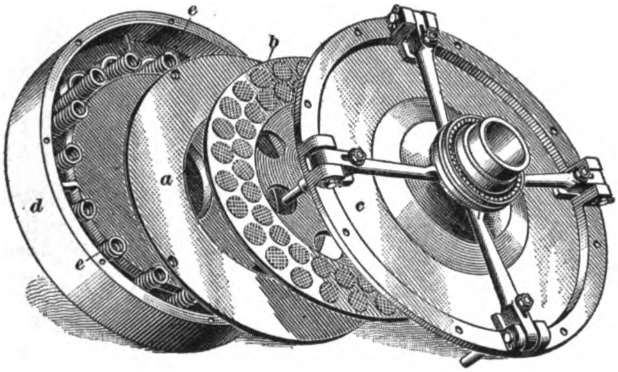

FIG. 13

21. Disk clutches employing cork inserts may be run dry or they may be run in oil. When run in oil, the wear on the corks is reduced but the coefficient of friction of the contact surfaces is decreased at the same time. The Knox three-plate clutch shown in Figs. 13 and 14 is an example of a dry-plate clutch with cork inserts, with the corks in the middle plate. In Fig. 13, the clutch is shown disassembled; that is, with the three plates *a*, *b*, and *c* removed from the flywheel *d*. On account of the small number of friction surfaces, the plates are extra large to give the required area of friction surface. The middle plate *b* contains the corks, which are arranged as shown.

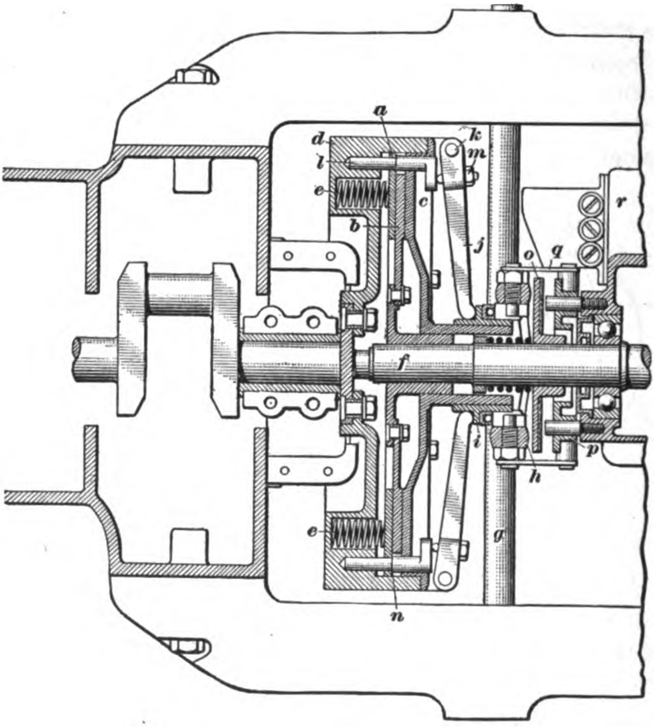

Fig. 14

The clutch is of the multiple-spring type, the springs *e* being contained in pockets in the flywheel *d*.

22. When assembled, as shown in the sectional view of Fig. 14, the two forward plates *a* and *b* are located inside of the flywheel *d*, and the plate *c* is bolted to the rim. Normally, the clutch is held in engagement by the springs *e*, which force the movable plates *a* and *b* against the fixed plate *c*. The plates *a* and *c* are the driving plates and rotate with the flywheel, and the plate *b* is the driven plate and is keyed to the transmission shaft *f*. With the clutch in the engaged position, power is transmitted by friction from the driving plates to the driven plate, thus forming a coupling between the engine shaft and the transmission shaft.

The clutch is disengaged by a pressure on the foot-pedal which is not shown in the illustration. A forward pressure on this pedal rotates the shaft *g*, thus swinging the yoke ends *h* forwards and sliding the sleeve *i* toward the flywheel. This movement of the sleeve *i* swings the arms *j* on the pins *k*, which in turn force the pins *l* forwards by means of the setscrews *m*. Each pin *l* has a shoulder *n* that presses against the clutch plate *a*; hence, when the foot-pedal is operated, the plate *a* is forced forwards, compressing the springs *e* and separating the friction surfaces of the clutch. This permits the engine to run free, without rotating the driven plate and transmission shaft.

The disk *o*, Fig. 14, belongs to the clutch brake. This disk revolves with the transmission shaft while the disk *p* is stationary. When the clutch is disengaged, further movement of the pedal forces the disk *p* forwards by means of the arms *q* until it makes contact with the disk *o* and decreases its speed and that of the driven member of the clutch. The part *r* is the forward end of the transmission case.

23. Clutches Running in Oil.—The plates of a multiple-disk clutch running in a bath of oil are not customarily faced with friction fabric, although in some cases one set of disks is provided with cork inserts. When metal-to-metal friction surfaces are used, a greater number of disks is required than when one set is faced with asbestos fabric, or is fitted with cork inserts.

A typical multiple-disk clutch designed to run in oil is the Lozier clutch, which is made up of thirty-five hardened and ground disks of saw-blade steel 11½ inches in diameter. These disks are not faced nor provided with inserts of any kind but are enclosed in an oil-tight case. The two sets of disks *a* and *b* mounted in place on the inner spider *c*, are shown in Fig. 15. Eighteen of these disks comprise the driving set, and when the clutch is assembled they are rotated with the outer member *d* by means of the keys *e* that engage with corresponding slots *f* in the disks. The other seventeen disks make up the driven set and are attached to the inner spider *c*. The closing spring is shown at *g* and the pressure sleeve, by means of which pressure is conveyed to the plates, at *h*. When the clutch is in use, the outer member *d* is bolted to the engine flywheel, the cover *i* is bolted to the outer member *d*, and the trunnion, or collar, *j* surrounds the clutch shaft.

24. A sectional view of the Lozier clutch in its engaged position is shown in Fig. 16. In this position, the driving disks *a*

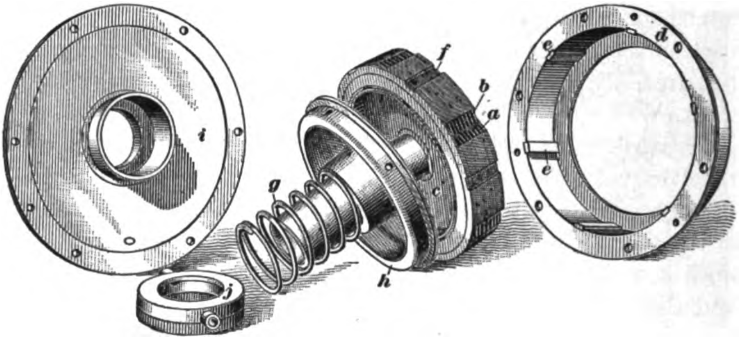

FIG. 15

and the driven disks *b* are forced together by the pressure of the closing spring *c*, which is compressed between the adjusting nut *d* and the closed end of the pressure sleeve *e*. The adjusting nut *d* is screwed on the hub *f* of the cover *g* and is therefore prevented from sliding in the direction of the clutch axis. The tension of the spring can be adjusted by screwing this nut forwards or backwards on the hub. The clutch is released by a pressure on the foot-pedal, which is connected by a suitable shaft and yoke to the collar *h*, so that a pressure forwards on the pedal forces the collar toward the rear of the car, or away from the clutch. The pressure of the collar is transmitted through a ball thrust bearing *i* to the pressure sleeve and thus compresses the closing spring *c*, allowing the disks to separate. The driving disks *a* are free to slide on the keys *j* and the driven disks *b* on the keys *k*; hence, when the spring pressure is released, these disks readily separate. As there is no connection between the engine shaft and the transmission shaft other than by means of the clutch plates, the engine runs without driving the transmission when the clutch is not engaged. However, as soon as the plates are forced together, motion is transmitted from the flywheel through the plates to the driven drum *l* and by means of the clutch coupling *m* to the transmission shaft *n*. In this clutch, the end of the engine crank-shaft extends into the clutch shaft where it rotates on the ball bearings *o*. A spring *p* holds the oil ring *q* in place, thus preventing the escape of oil from the clutch case.

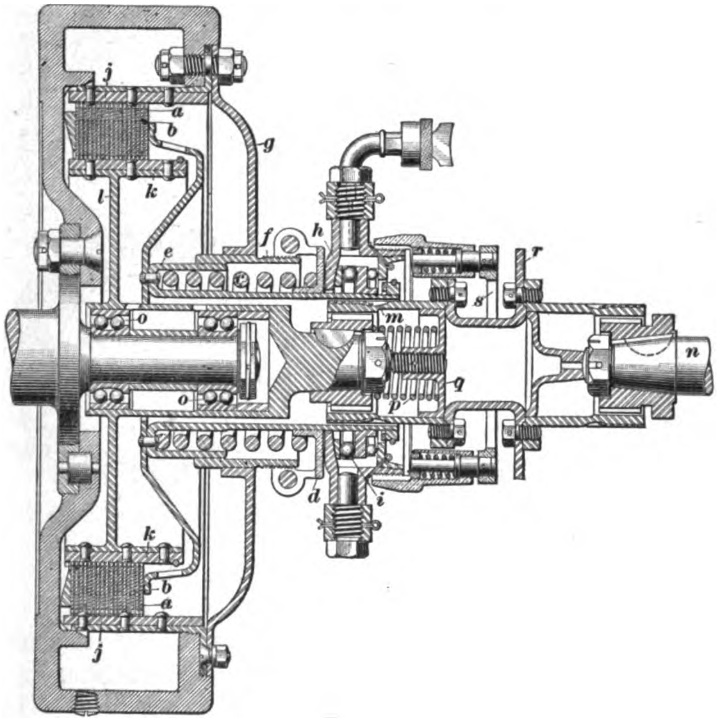

FIG. 16

Incorporated with this clutch is a clutch brake, which consists essentially of a disk *r* that rotates with the transmission shaft, and a stationary friction plate *s* that is forced against the disk *r* when the clutch pedal is pressed forwards to its farthest position. Friction between these two surfaces reduces the speed of the transmission shaft so that the gears can easily be shifted.

25. The disks of multiple-disk clutches running in oil have a tendency to stick together when the clutch is released, especially when one set is provided with cork inserts. Therefore, some means is often provided to insure separation of the disks and thus prevent dragging of the clutch. A method sometimes used is to place small springs between the disks; when the clutch is released these springs expand and force the disks apart. An example of this method of releasing the disks is found in the Premier cork insert clutch, shown in Fig. 17. The driving disks *a* are of bronze and contain the cork inserts. Each of these disks is provided with four projections *b* that engage with corresponding slots in the driving drum *c*, which is bolted to the flywheel when the clutch is assembled. The small springs *d* are placed between alternate driving disks to allow room for them when the clutch is engaged. The driven disks *e* are of steel and are provided with projections that

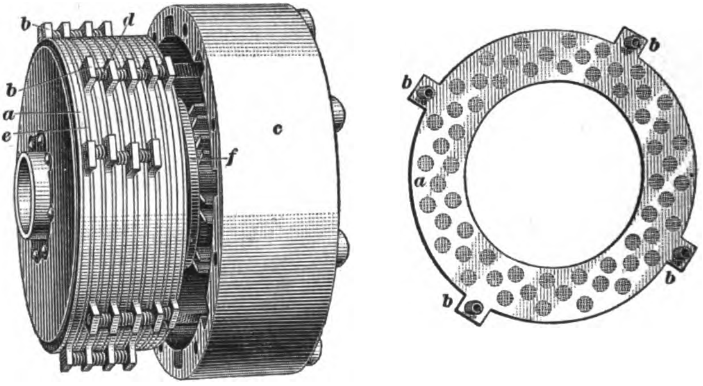

Fig. 17

engage with corresponding slots on the driven drum *f*. When the clutch is disengaged, the small springs *d* force the disks *a* and *e* apart and thus allow the driving disks to turn freely between the driven ones.

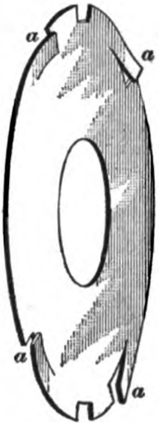

Fig. 18

26. Another method sometimes employed to separate the disks of multiple-disk clutches running in oil is to provide springs formed by bending back strips partly cut from the metal disk, as shown at *a*, Fig. 18. These bent-up ends, or tongues, are formed on alternate disks, usually the driving disks. When the clutch is engaged, they flatten down, but when it is released, they spring out, forcing the plates apart.

In addition to overcoming the sticking tendency of the friction surfaces, the separating springs must overcome the frictional resistance to the sliding of the disks along the arms or keys that drive them. If the clutch is transmitting considerable power at the instant it is released, there is considerable frictional resistance to the sliding of the disks along these parts.

CONTRACTING AND EXPANDING CLUTCHES

27. Band clutches making use of cylindrical friction surfaces are used on a few makes of automobiles. The Haynes clutch, which is illustrated in Fig. 19, is an example of the contracting band type. In this clutch, which is shown in the released position in view (*a*), the friction is obtained by tightening the steel band *a* around the steel drum *b*. The band *a* is keyed to a short shaft *c*, which is connected to the transmission, and the drum *b* is bolted to the engine flywheel; hence, when the clutch is engaged, power is transmitted directly from the engine to the transmission.

A peculiar feature of this clutch is the type and location of the clutch spring *d*. This spring is attached at its upper end to the lever *e* and at its lower end to some part of the automobile frame, so that when it is allowed to contract, it turns the clutch shaft *f*, which slides the collar *g* forwards by means of the yoke *h*. The collar carries a wedge-shaped shipper head *i*, which, when pressed forwards with the collar, forces the lever *j* to one side, thereby drawing the ends of the band *a* together and engaging the clutch. The manner in which the lever *j* brings the clutch in engagement is shown in view (*b*). Attached to the upper end of the lever by means of a squared pin is a latch *k* that engages with a catch on the end of the strap *l*. As the lever *j* is swung to the left, it turns the latch *k* and draws the strap toward it, tightening the band and engaging the clutch.

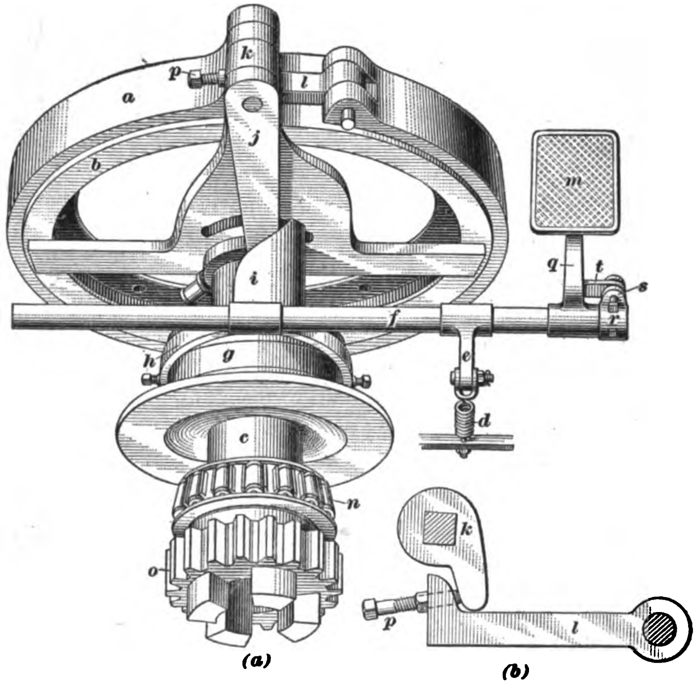

(a) (b)

FIG. 19

The clutch is released, or disengaged, by pressing forwards on the foot-pedal *m*, which turns the shaft *f* against the expansion of the spring *d*. The yoke and shipper head are thus drawn away from the clutch, the lever *j* takes the position shown in (*a*), and the ends of the band *a* spring apart. The drum *b* is then free to rotate without turning the band *a* and the engine can be run free.

At *n* is shown a roller bearing for supporting the shaft *c*, and at *o* is the gear by means of which the shaft drives the transmission gears. In some models of the Haynes clutch, the lever *j* and latch *k* are held in the released position by a small helical spring, which prevents any rattling of these parts. Adjustment of the Haynes clutch is made by means of a setscrew *p*. The clutch band can be tightened by screwing this setscrew into the end of the strap *l*; and loosened, by unscrewing the setscrew.

28. In band clutches of the expanding type, the inner member is of variable diameter and the outer member is a drum attached to or integral with the flywheel. In this type of clutch, the required friction is obtained by expanding the inner member until its outer surface makes contact with the inner surface of the outer member. As in the other types of clutches, the inner member is connected to the transmission shaft, so that when the clutch is fully engaged the engine crank-shaft is directly connected to the transmission shaft. The force of the clutch-closing spring may be transmitted to the expanding band either by means of levers or by a right-and-left screw.

29. The clutch used on the Peerless car is an example of an expanding band clutch employing a right-and-left screw to expand the inner member. A perspective view of the inner member of this clutch is shown in Fig. 20. The expanding part is a steel band *a* that is covered with a leather facing *b* provided with cork inserts. The band is fixed at one end to the clutch drum *c* and at the other, which is free from the drum, to one end *d* of the expander arm. The drum contains a slot, through which the band is secured to the expander arm by means of a bracket. The other end *e* of the arm is attached to the drum. Inside of the expander arm and running its entire length is a screw that contains a right-hand thread at one end and a left-hand thread at the other, which turn in corresponding threads in the ends of the expander arm. This screw is turned by the link *f* and when this link is drawn toward the rear of the car, or away from the clutch drum, by the expansion of the closing spring *g*, it rotates the screw in the direction that will force the ends *d* and *e* of the expander arm apart and thus expand the band *a*. As the band expands, the leather facing takes hold of the inner surface of the flywheel drum, thus engaging the clutch.

The clutch is disengaged, or released, by a pressure on the clutch pedal, which, through a suitable rod, swings the operating lever *h* on its fulcrum at *i* and compresses the spring *g* by means of the collar *j*. This movement of the collar rotates the right-and-left screw in the direction necessary to draw the ends of the expander arm toward each other and thus contract the band *a*, allowing the flywheel to revolve freely. When placed in the car, the fulcrum *i* is carried on a pressed-steel bracket that is attached to a side member of the frame.

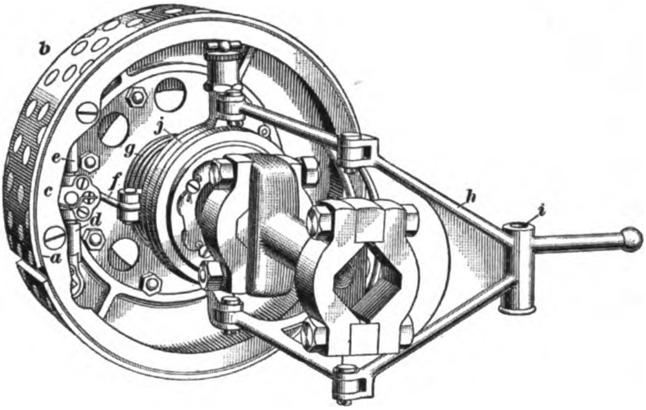

FIG. 20

30. A sectional view of the Peerless clutch and flywheel showing the details of construction and the method of adjustment is presented in Fig. 21. The expanding band is shown at *a*; the leather facing, at *b*; the inner drum, at *c*; the expander arm, at *d*; the expander link, at *f*; the clutch spring, at *g*; and the shifter collar, at *j*. The outer drum *k* is cast integral with the flywheel. The engine shaft extends into the clutch shaft *l* and turns on a bushing *m* and butts against a thrust bearing *n*.

An endwise movement of the collar *j* turns the right-and-left screw *o* by means of the link *f* and the adjusting screw *p*.

The clutch is adjusted by turning the screw *p*. A movement right-handed rotates the right-and-left screw *o* to separate the ends of the expander arm and thus tighten the clutch, while a movement left-handed rotates the screw *o* to loosen the clutch. The weight of the expander arm and screw is compensated for by means of a lead weight *q* that is placed in the inner drum directly opposite these parts.

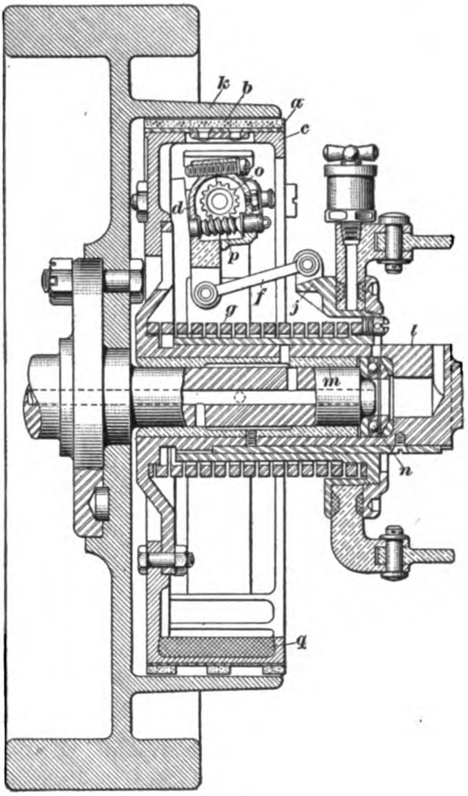

FIG. 21

31. When a clutch of the expanding type is rotating, the centrifugal action tends to throw the expanding portion outwards from the center of the clutch and thus increase the pressure between the friction surfaces. At high speeds, this increase of pressure may become great enough to make the clutch hold much tighter than it will at low speeds. Hence, some means must be provided whereby the expanding band, or shoe, will be positively withdrawn from the outer drum when the spring is compressed. This is accomplished in the clutch shown in Figs. 20 and 21 by means of the right-and-left screw. In other cases it is accomplished by means of levers and togglejoints.

CLUTCH-OPERATING DEVICES

CLUTCH-ACTUATING MECHANISM

32. Pedal Connections.—Friction clutches for automobiles are now invariably operated by a pedal that projects upwards through the floor boards of the car and is within easy reach of the driver's left foot. Generally, this pedal is carried on a tubular shaft that extends part or all of the way across the frame of the car and is supported by brackets on members of the frame. This shaft also carries a yoke, by means of which the clutch is released when the pedal is pressed forwards. In the unit power-plant type of construction, the clutch pedal is sometimes supported by a short shaft that is carried on the clutch casing. Clutch pedals are attached in a variety of ways. Sometimes they are simply keyed or clamped to the shaft, when they cannot be adjusted in any way. In other cases, they are made adjustable and can be lengthened or shortened within certain limits to suit the height of the driver of the car and thus add to his comfort.

33. A simple form of clutch-actuating mechanism is shown in Fig. 19 in connection with the Haynes contracting band clutch. The pedal lever *q* is carried on the tubular shaft *f* and is free to be adjusted to some extent. A hub *r* secured to the shaft carries two lugs *s*, between which is a lug *t* extending outwards from the pedal. This lug *t* is held in place by two setscrews that pass through the lugs *s*, and its position, and consequently that of the pedal, relative to the shaft, can be changed by turning the screws. The pad *m* is secured to the lever *q* by means of a bolt.

This clutch is designed in such a manner that it is released by sliding the shipper head *i* toward the rear of the car. A forward movement of the pedal turns the yoke backwards and thus releases the clutch.

34. An example of a slightly different arrangement of the clutch-actuating mechanism is shown in Fig. 22, which illustrates the mechanism employed on the Kline car. In this clutch, it is necessary to press the inner cone *a* inwards, or toward the flywheel *b*, in order to release it. To accomplish this, the cross-shaft *c* is mounted underneath the transmission shaft *d*, instead of above, causing the yoke *e* to be moved ahead when the pedal *f* is depressed. The cross-shaft is carried on brackets secured to members of the frame. The clutch pedal *f* is provided with an adjustment somewhat different from that of the Haynes. The hub *g*, which is clamped to the shaft, carries an arm *h* that extends in front of the pedal, as shown at *i*, so that when the pedal is pressed forwards the arm is also moved. The relative positions of the arm *h* and the pedal may be varied by a setscrew *j* that extends entirely through the pedal lever, and against which the arm bears. A forward movement of the clutch pedal revolves the shaft *c*, moving the yoke *e* ahead and releasing the clutch.

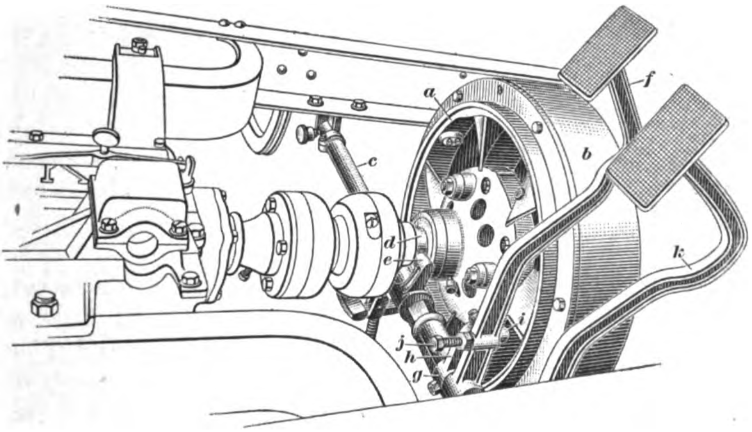

Fig. 22

The pedal *k*, located to the right of the clutch pedal, is used for operating the service brake and is not connected in any way with the clutch.

35. Adjustable Pedals.—The pedals used for operating the clutch and service brakes are made adjustable for length in a large number of automobiles. Adjustable pedals are made in a variety of forms and are, for the most part, quite simple in construction. A common type is the **bolt-adjustment pedal,** examples of which are shown in Fig. 23. In view (*a*), which shows the practice followed in the Cole car, the shank of the pedal is fastened to the pedal lever by a through bolt and the pedal can be raised or lowered by making use of different holes in the shank. In some pedals of this form two bolts are used, while in still other cases the shank slides over the lever, which is bent at approximately a right angle, as shown in (*b*), this construction being used on Velie cars.

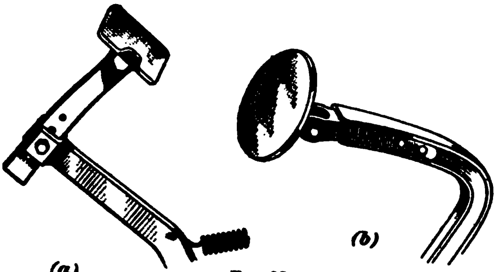

FIG. 23

Another common form of adjustable pedal is the **screw pedal,** illustrated in Fig. 24. In one form the pedal shank, or spindle, screws into the tapped end of the lever and a locknut is placed directly on the shank, underneath the lever. This is the practice of the Pierce-Arrow Motor Car Company. In this design of pedal, the pitch of the threads usually is not very steep and the adjustment secured by turning the pedal through one revolution is close enough for all practical purposes.

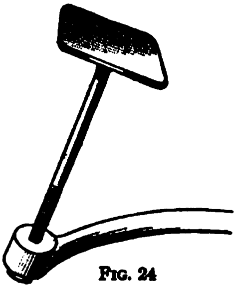

FIG. 24

In some pedals, a **jaw-clamp adjustment** is employed; that used in Pope-Hartford cars is shown in Fig. 25. The end of the pedal lever contains a jaw clamp. The shank of the pedal contains corrugations, or notches, in which the bolt fits. The bolt passes through the jaws at the end of the pedal lever and adjustment is made by removing the bolt and sliding the desired notch in place.

There are, of course, other designs of adjustable pedals than those shown, but the principle is the same in all. Practically the only difference is in the details of construction.

36. Some clutch pedals are constructed without any means of lengthening or shortening them, but the position of the pedal itself can be changed, as shown in connection with the clutch-actuating mechanism in Fig. 22. Another simple device, which accomplishes this object, is shown in Fig. 26, and is used in some Overland cars. In this design, the hub *a* is attached to the shaft and the lever *b* is connected to the hub by means of a bolt that passes through the slot *c*. The pedal lever is free to revolve on the rod; hence, adjustment is made by loosening the nut and turning the lever to the desired position, after which the nut is again tightened. A noticeable feature of this pedal is that the face *d* can be tilted to any angle desired by loosening the nut in the pedal face and placing it in the desired position. A considerable number of manufacturers make the pedal faces adjustable in this manner.

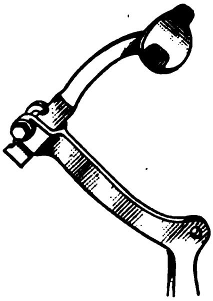

Fig. 25

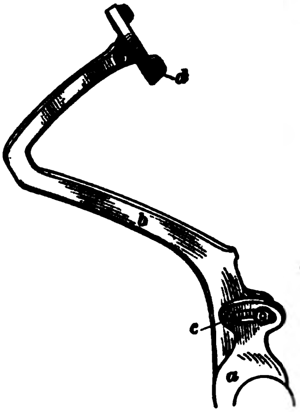

Fig. 26

CLUTCH BRAKES

37. In order to eliminate noise as far as possible when changing gears from a low to a higher speed, clutch brakes are used extensively in modern cars. The **clutch brake** is simply a friction brake operated by depressing the clutch pedal, its function being to bring to rest or to slow down the driven member of the clutch when the clutch is released. Examples of clutch brakes mounted on clutches are shown in Figs. 4, 14, and 16. In each case the brake is so constructed that it is applied when the clutch pedal is fully depressed.

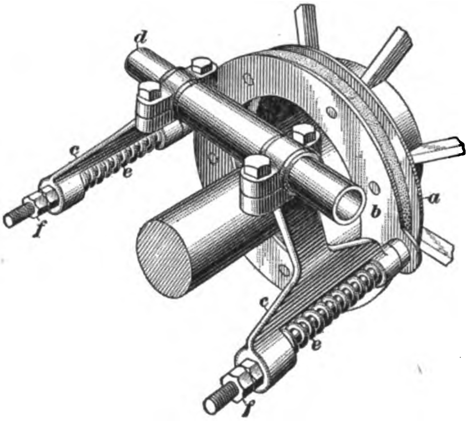

FIG. 27

38. A simple form of clutch brake, slightly different from those already described, is used on the White automobile; a perspective view of the brake is shown in Fig. 27. The movable disk *a* is attached to the inner member of the cone clutch and the stationary disk *b*, which is faced with asbestos fabric, is supported from the frame of the car by the arms *c* and the cross-tube *d*. When the clutch is disengaged, the plate *a* is carried toward the rear by the inner cone and bears against the plate *b*. The stationary plate is held against the movable plate *a* by the springs *e*, thus obtaining the required friction. The adjusting nuts *f* limit the action of the clutch brake. The driven member of the clutch, and consequently the driving gears of the transmission, can be slowed down or stopped entirely by depressing the clutch pedal either partly or fully as desired.

39. In order to obtain the best results from the use of the clutch brake, it is necessary to know when to use it and the extent to which it should be used for different conditions. The transmission gears that are to be meshed when changing speeds must have practically the same circumferential velocities in order to make possible a silent shift; hence, for different conditions the brake must be used in different ways. When starting the car, the driven gears of the transmission are at rest; therefore, the clutch pedal should be fully depressed so as to apply the clutch brake fully and bring the driven member of the clutch and the driving gears of the transmission also at rest.

When changing from a low to a higher gear, the driven gear of the transmission is running slower than the driving gear that is to be meshed with it; hence, it is necessary to slow down the driving gear but not to stop it entirely. This is done by releasing the clutch but not fully depressing the pedal, or, in other words, by partly bringing the clutch brake into operation. Experience with any particular car is required to ascertain exactly how far to depress the clutch pedal in order to obtain the desired result.

When changing gears from a higher to a lower speed, the clutch pedal should be operated so as not to bring the clutch brake into action, because during this operation the speed of the driving gear of the transmission is less than that of the driven gear and any application of the clutch brake will decrease it still further. The speed of the driven member of the clutch and of the driving gear of the transmission can then be allowed to increase with the engine speed while the gears are in neutral until practically equal circumferential velocities of the meshing gears are obtained.

FRICTION MATERIALS FOR CLUTCHES

40. In cone clutches, the outer cone is generally made of gray cast iron, malleable cast iron, or is a steel casting and the inner cone is of aluminum, cast iron, or pressed steel. The inner cone is usually faced with leather or with some kind of asbestos fabric, such as raybestos, multibestos, thermoid, etc. Cork is also often used as a friction material in the form of inserts in the leather facing. Metal-to-metal cone clutches have been used to some extent but these are not employed at present.

When metal is used on leather or asbestos fabric, no lubrication of the rubbing surfaces is required; in fact, the presence of a lubricant between these surfaces is generally injurious and detrimental to the operation of the clutch. However, a small quantity of castor oil or neat's-foot oil is sometimes applied to the leather of a slipping cone clutch for the purpose of putting it in good condition. Before applying this oil, the leather should be thoroughly washed in gasoline and then only a very small quantity of oil used.

The friction disks of multiple-disk clutches, when entirely of metal, as is usually the case, are ordinarily of steel, or one set of disks is of steel and the other set of bronze. In the former case, the friction surfaces, of course, are steel on steel, and in the latter case, bronze on steel. Sometimes, one set of disks is faced with asbestos fabric or provided with cork inserts. The steel used to a considerable extent for the disks of friction clutches is of the same quality as that used in common wood saws and is known as *saw-blade steel.*

In the case of expanding or contracting clutches, both friction surfaces are sometimes steel, or one may be a cast-iron or steel casting and the other brass or bronze.

TRANSMISSION AND CONTROL MECHANISM

(PART 2)

TRANSMISSION MECHANISM

SPEED-CHANGING MECHANISM

PURPOSE

1. Inasmuch as the gasoline engine will give its highest efficiency when working with full charges, it should be operated under that condition as much as possible. Slight changes of speed of the automobile and of the power of the engine can be made by throttling and by manipulating the spark; but for great speed changes, it is necessary to change the gear-ratio between the engine and the driving wheels. The device used for this purpose is properly called a **change-speed gear,** but, popularly, it is known as a **transmission.** As the four-cycle gasoline engine applied to automobiles is irreversible, it is necessary, in order to go backwards, to change the direction of rotation of the driving wheels by bringing into action a mechanism that will do this. This mechanism is called the **reversing gear,** or **reverse** for short, and is incorporated in all transmissions.

2. The change-speed gears in use on pleasure vehicles may be divided into three general classes, depending on the principle on which they operate. These classes are *sliding change-speed gears*, *planetary change-speed gears*, and *friction transmissions*.

Several other types of transmissions have been designed from time to time, but have never attained success commercially.

The speed-change mechanism is usually operated by the driver by means of a lever or a pedal. However, a number of cars are equipped with the *electric gear-shift*, in which the speed-change mechanism is electrically operated, and is controlled by means of push buttons located on or near the steering wheel, or with the *pneumatic gear-shift*, which operates the change-speed mechanism by compressed air.

SLIDING CHANGE-SPEED GEARS

3. Classification.—In the sliding-gear transmission, spur gears are carried on two parallel shafts; one of these is in two parts, a forward or driving part and a rearward or driven part; the other shaft is a *countershaft*, or *jack-shaft*, through which the power is transmitted for certain speeds. The various speeds are obtained by sliding the gears axially on the main shaft and securing the desired speed ratio by bringing them in mesh with the proper gears on the countershaft. For what is known as the *direct drive*, the two parts of the main transmission shaft are locked together, forming a direct drive from the engine to the rear axle. Sliding-gear transmissions are ordinarily designed to give either three speeds forwards and one reverse, or four speeds forwards and one reverse. The former is popularly called a *three-speed transmission*, and the latter a *four-speed transmission*.

4. Sliding change-speed gears are constructed in two general types, one of which is known as the *selective transmission*, and the other as the *progressive transmission*. In the selective transmission, the change can be made from any speed to any other while the car is traveling, as from slow speed to high speed; but in the progressive transmission, the change from slow to high speed, as well as from high to slow speed, must be made step by step through all the speeds.

There are two types of selective and progressive transmissions, namely, the *horizontal* and the *vertical*. In the so-called horizontal transmission, the two shafts on which the change-speed gears are mounted lie in the same horizontal plane, while with the vertical transmission the shafts lie in a vertical plane, one above the other.

5. Vertical Three-Speed Selective Transmission. The most widely used transmission system for pleasure cars is the three-speed transmission of the selective type. An example of this system is the three-speed transmission shown removed from its casing in Figs. 1 to 5, which is used in many Northway unit power plants. In this system the countershaft is mounted below the main shaft. The main shaft consists of the driving part *a*, which carries the pinion *b*, and the driven part *c*, which carries the sliding gears *d* and *e*, and which rotates in a roller bearing mounted within the pinion *b*, and another antifriction bearing at its rear end. The gears *d* and *e* are free to slide axially on the shaft *c*, but are prevented from revolving on it by four splines *f* that fit into corresponding slots in the hubs of the gears. The sliding of the gears is accomplished by the *shifter forks* *g* and *h*, which are operated by the change-speed lever acting through the *shifter rods* *i*

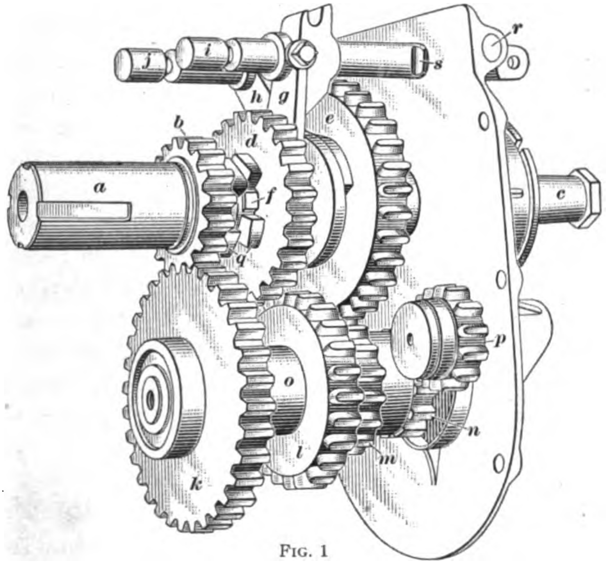

Fig. 1

and *j*, respectively. The gears *k*, *l*, *m*, and *n* are fixed to the countershaft *o* and revolve with it. The idler gear *p* is carried on a short shaft of its own and is brought into use for obtaining the reverse motion. The pinion *b* and the gear *k* are constantly in mesh; hence, the countershaft always revolves when the shaft *a* is in motion. The driving shaft *a* is connected to the driven side of the friction clutch and receives its power from the engine, while the driven shaft *c* is connected to the propeller shaft and drives the differential gear and rear wheels.

6. *First*, or *low*, *speed* is obtained by shifting the gear *e* by means of the rod *j* and the fork *h* until it meshes with the gear *m* on the countershaft, as shown in Fig. 1. When in this position, the pinion *b* drives the gear *k*, together with the shaft *o* and the pinion *m*; the pinion *m* in turn drives the gear *e* and the shaft *c*, which is connected to the propeller shaft. The gear *k* on the countershaft is larger than the pinion *b*, and therefore rotates at a slower speed. The speed of the pinion *m* is, of course, the same as that of *k*. The gear *e*, which is driven by the pinion *m*, is larger than this pinion and consequently rotates at a slower speed, which is the same as that of the shaft *c*. There are, therefore, two steps in the reduction of speed between the driving shaft *a* and the driven shaft *c*. The first reduction of speed is between the pinion *b* and the gear *k*, and the second reduction is between the pinion *m* and the gear *e*. Both the driving shaft *a* and the driven shaft *c* rotate in the same direction.

7. *Second*, or *intermediate*, *speed* is obtained by unmeshing gears *m* and *e* and shifting the gear *d* in mesh with the gear *l* on the countershaft, as shown in Fig. 2. The countershaft is driven at the same speed as before by means of the pinion *b* and the gear *k*. The gear *l* drives the gear *d* on the main shaft *c*. The gear *l* is the same size as the gear *d*; therefore, the latter gear rotates at the same speed as the gear on the countershaft. There is a reduction of speed from the pinion *b* to the gear *k*, but no reduction or increase from the countershaft to the driven shaft *c*. The result is that the propeller shaft rotates at a slower speed than the driving shaft *a*, but the total speed reduction is not so great as in the low speed position.

While the gears *l* and *d* are the same size in the particular transmission illustrated, this is not necessarily the case; sometimes the gear *l* is slightly smaller than the gear *d*, in which case there is a slight speed reduction from the countershaft to the driven shaft *c*. The gear *l* may also be larger than *d*, in which case there is an increase of speed from the countershaft to the driven shaft *c*.

8. In the *third*, or *high*, *speed* position the drive is direct from the shaft *a* to the shaft *c* without going through the intermediary gears on the countershaft. The gears are shown in this position in Fig. 3. This setting is accomplished by sliding the gear *d* forwards so that the clutch jaws *q* at the front end of the gear engage with those on the rear end of the pinion *b*. The transmission of power is now direct from the driving shaft *a* through the jaw clutch to the driven shaft *c*. The pinion *b* is still in mesh with the gear *k*, so that the countershaft revolves, but no power is transmitted through it because

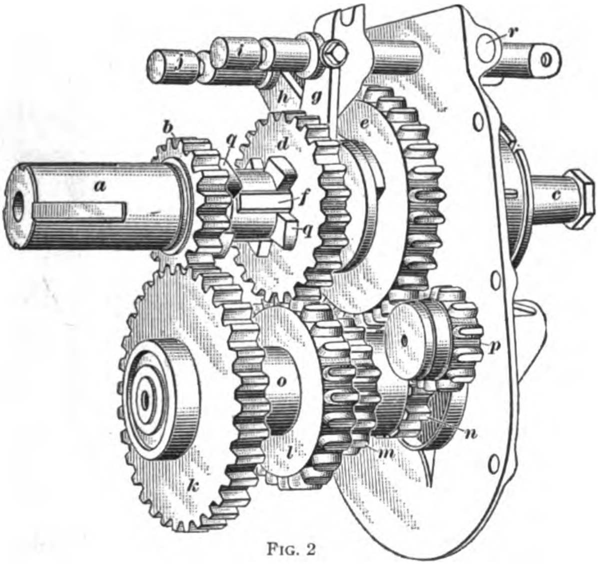

FIG. 2

the gears *l*, *m*, and *p* run freely without meshing with either gear *d* or *e*.

9. The position of the gears in *reverse speed* is shown in Fig. 4. In this speed, the gear *e* is shifted to mesh with the idler pinion *p* and the gear *d* is shifted to a position midway between *k* and *l*. Power is transmitted to the countershaft by means of the pinion *b* and the gear *k*, and through the shaft to the gear *n*, which meshes with the pinion *p*. The gear *n* is small enough in diameter to clear the gear *e*; it drives the gear *e* by means of the idler *p*. The introduction of this idler causes the gear *e* to revolve in the same direction as the gear *n*, which direction is opposite to that of the shaft *a* and the driving pinion *b*. In all the other cases that have been considered, the driving shaft *a* and the driven shaft *c* rotate in the same direction for forward travel of the car.

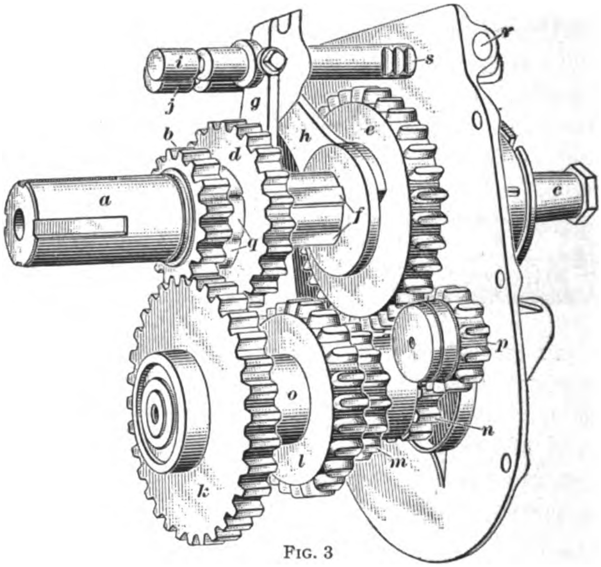

FIG. 3

10. In the *neutral position*, shown in Fig. 5, the gears are set so that there is no connection whatever between the driving shaft *a* and the driven shaft *c*. The shaft *a* can be driven at full speed by the engine and the shaft *c* will remain stationary in this position. To obtain this setting, the gear *e* is shifted to a position midway between the gears *m* and *p*, and the gear *d* is shifted to a position midway between the gears *k* and *l*. The pinion *b* drives the gear *k* as usual, but there is no connection between the countershaft and the shaft *c*; neither is the jaw clutch *q* engaged. The gears are placed in this position when it is desired to allow the engine to run while the car is at a standstill.

11. In order to secure accurate meshing of the gears as well as to hold them in position, the shifting bars for selective change-speed gears are provided with a locking device. This device usually consists of a spring-operated plunger that drops into a slot in the shifting bar for each position of engagement of the gears. In Figs. 1 to 5, the plunger operating on the shifting bar *i* is located beneath the plug *r* in the end member of the housing and when the gears are shifted to neutral or any other regular position, it drops into a **V** slot *s* in the bar *i*. While these locks are not of sufficient strength to

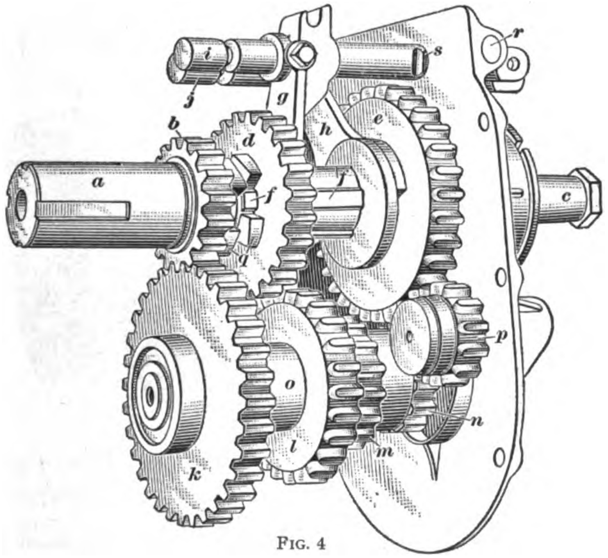

FIG. 4

prevent the gears from being shifted by hand, yet they are strong enough to serve the required purpose.

12. Three-Speed Progressive Transmission.—In the selective transmission just described, the gears can be shifted from any speed to any other speed without going through any intermediate positions. For instance, a change can be made direct from first speed to third or from third to first without passing through second, or it can be made from third to neutral without passing through either first or second. The progressive transmission differs from this, in that in changing from first to third speed or from third to first, it is necessary to pass through second, and in changing from third to neutral, it is also necessary to pass through second speed. In other words, the various positions in the progressive system of transmission must be passed through in a fixed order. This is generally considered a disadvantage; hence, the progressive transmission is not so widely used as the selective.

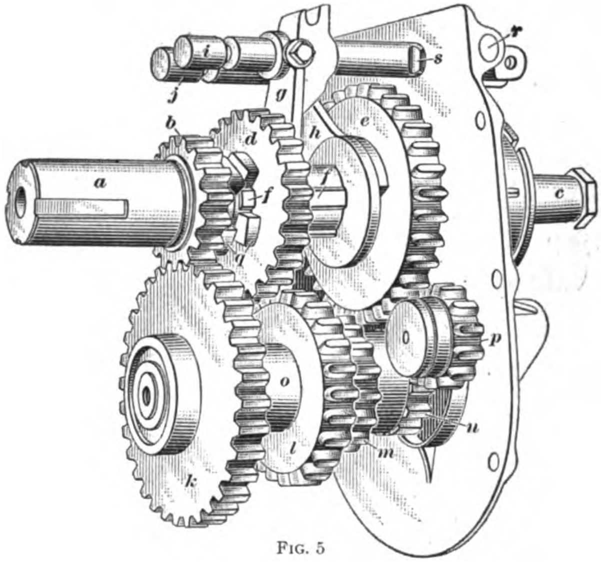

FIG. 5

13. A representative transmission system of the progressive type is the Stevens-Duryea transmission, a top view of which is shown in Fig. 6. This system is of the horizontal type and gives three speeds forwards and one reverse. The gears are shown removed from their casing, and the multiple-disk clutch *a* and universal sliding joint *b* are seen in place to show how the transmission is connected up. The arrangement of the gears is exactly the same as in the selective transmission, except that the two sliding gears *c* and *d* are connected by a sleeve, so as to form one rigid part that is free to slide, but not to rotate, on the shaft *e*. These sliding gears are operated by means of a single lever *f*, which is pivoted near the middle and is in turn operated by the driver of the car through a hand lever and connecting-rod. As in the selective gears shown, the gears on the countershaft *g* are constantly revolving, the countershaft being driven by the driving pinion *h*, which meshes with the gear *i* and which receives power from the engine through the clutch *a*.

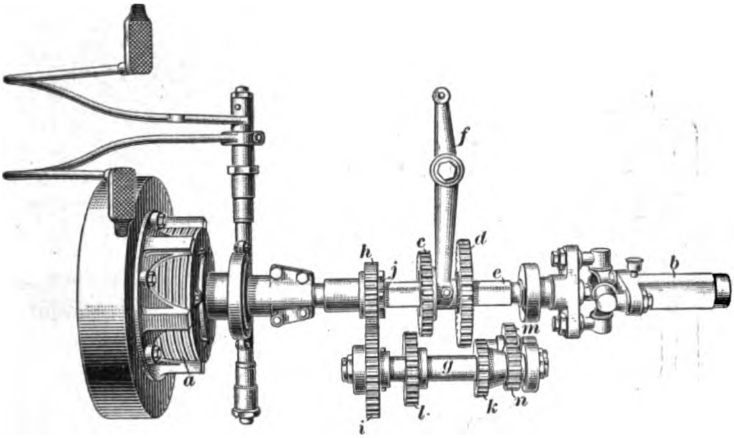

FIG. 6

14. The gears are shown in Fig. 6 in their *neutral position.* The sliding gears *c* and *d* are not in mesh with any gears on the countershaft and the jaw clutch *j* is not engaged; hence, no motion is transmitted from the driving pinion *h* to the driven part *e* of the main shaft. *First speed* is obtained by sliding the gears *c* and *d* to the rear until the gear *d* meshes with the gear *k*, when the required speed reduction between the pinion *h* and the shaft *e* is secured.

For *second speed*, the sliding gears are shifted forwards until the gear *c* meshes with the gear *l*, in which case the speed reduction is not so great as for first speed. The gears are in *high*, or *third*, *speed* when *c* and *d* are shifted still farther forwards and the jaw clutch *j* becomes engaged with corresponding slots in the hub of the gear *c*. Under these conditions, the shaft *e* and the universal sliding joint *b* are driven directly from the pinion *h* and, consequently, they revolve at crankshaft speed when the clutch *a* is fully engaged. The countershaft revolves as usual, but no power is transmitted through it; on account of this fact the gears run more quietly when in high than when in any other speed.

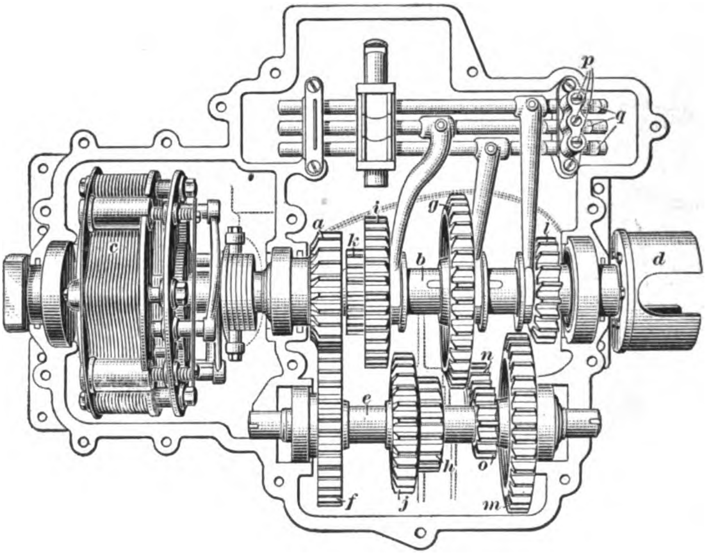

FIG. 7

By shifting the sliding gears completely to the rear, the *reverse speed* is secured. When in this position, the gear *d* meshes with the idler gear *m*, which is revolved by the countershaft through the pinion *n*. The shaft *e* is therefore driven in the same direction as the countershaft, but in the direction opposite to that from which the pinion *h* is driven, thus giving a reverse motion to the propeller shaft.

15. **Four-Speed Selective Change-Speed Mechanism.**—Selective change-speed gears giving four speeds forwards and a reverse are used on a number of the higher-priced cars. In some the direct drive is on third speed and in some it is on fourth speed. In Fig. 7 is shown the Winton four-speed transmission, assembled in the bottom half of the casing. This mechanism belongs to the class in which the clutch is contained in the same case as the change-speed gear, and the direct drive is on third speed. The general make-up and arrangement of the gears is the same as in the three-speed type, except that in the four-speed, there are more sliding gears and, consequently, the shifting mechanism is slightly more complicated.

As in the preceding transmissions illustrated, the driving pinion *a*, which is normally free from the main shaft *b*, receives its power through the clutch *c*. The power is transmitted to the propeller shaft through the coupling *d*. The countershaft *e* is revolved by the gear *f*, which is constantly in mesh with the pinion *a*. This pinion and the gear *f* are called *constant-mesh gears*. Three shifter forks and three shifter rods are used for shifting the gears on the shaft *b*. These are operated by means of the speed-control lever, which has a sidewise motion so that it can be engaged with any one of the rods.

16. In Fig. 7, the gears are shown in the *neutral position*. *First speed forwards* is obtained by shifting the gear *g* forwards until it meshes with gear *h* on the countershaft. The main shaft *b* and the propeller shaft are thus driven at a low rate of speed and in the same direction as the pinion *a*. For *second speed forwards*, the gear *i* is moved toward the rear until it meshes with the gear *j*. *Third speed forwards* is the direct drive, the gear *i* and clutch member *k*, which is in the form of a spur gear, being moved forwards so as to mesh *k* with an internal gear that is contained inside of the pinion *a*, and that serves as the second clutch member. This setting gives a direct drive from the pinion *a* to the coupling *d* without the use of any gears, although, as in the other mechanisms illustrated,

the gears *a* and *f* remain in mesh and the countershaft *e* continues to rotate, but only idly. For *high*, or *fourth*, *speed forwards*, the gear *l* is moved forwards until it meshes with the gear *m* on the countershaft. As the speed ratio between the gears *m* and *l* is greater than that between *f* and *a*, this setting will drive the shaft *b* at a greater speed than that of the pinion *a*; hence, this speed is higher than that obtained on the direct drive.

For the *reverse speed*, the gear *g* is shifted toward the rear so as to mesh with the idler gear *n*. The idler gear is driven by the pinion *o*; hence, when the gears are in this position, the shaft *b* rotates in a direction opposite that of the pinion *a*, and the car is driven backwards.

Plungers for the shifting-bar locking device are located under the plugs *p*. When the gears are in position the plungers drop into the proper slots, some of which are shown at *q*.

17. Hand Gear-Shifting Mechanism.—On automobiles having the steering column on the right side, the hand lever for operating the change-speed gears is most commonly located just outside the driver's seat on the right, with the emergency brake lever to the right of the gear-shift lever. However, on some cars having the steering column on the right, the control levers are located in the center of the car. The objection to the latter arrangement is that the levers must be operated by the left hand, which is generally not so dexterous as the right. Many cars, and the number is increasing, have the steering column located on the left side, when the control levers are placed either on the left of the driver or in the center of the car. The latter location is increasing in popularity, because it permits the levers to be mounted directly over the gear-box and thus does away with superfluous connections, and at the same time it allows the driver to use his right hand in shifting gears.

18. Fig. 8 shows a perspective view of part of the Series Nine Cole chassis fitted with left-hand drive and center control. The gear-shifting lever *a* and the emergency-brake lever *b* are located directly over the transmission case *c*. The brake lever *b* operates in a quadrant *d* and is connected by the usual rods to a set of internal brakes on the hubs of the rear wheels. The speed-change lever *a* operates in an **H** quadrant *e*, which permits a sidewise as well as a forward and backward motion for manipulating the shifter bars. This quadrant rises above the floor board so as to be in plain view of the driver. When the lever is in one slot of the **H** quadrant, it is connected to one of the shifter rods, and when it is moved sidewise to the other slot, it immediately becomes connected to the other rod. Hence, when the lever is moved backwards or forwards in either slot it operates one shifter bar and thus slides the desired gears in mesh and produces the required speed.

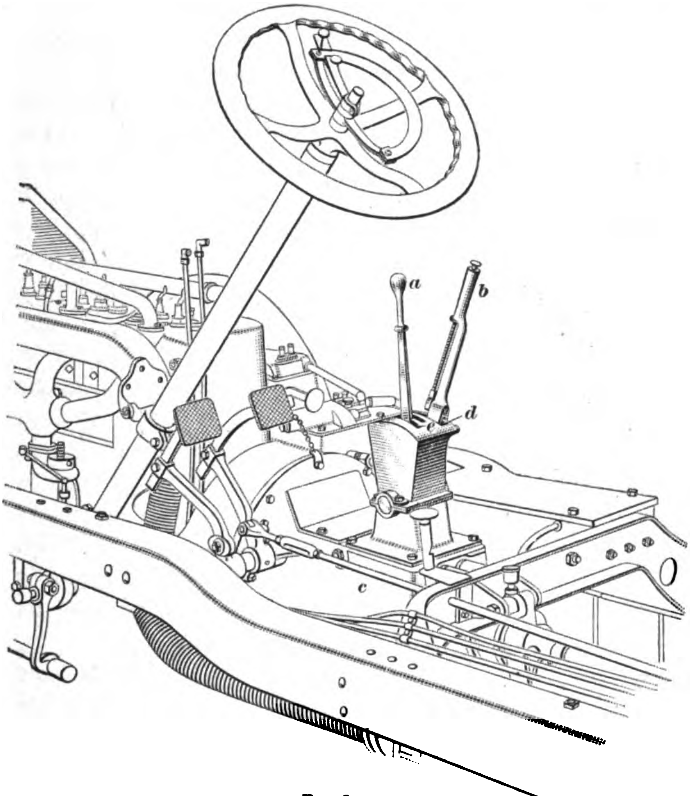

FIG. 8

The same general principle applies to cars having the control levers on the side, except that, of course, the connection between the hand lever and the shifter rods is more extended.

19. There are two general methods by which the control levers in the sliding change-speed gears of the selective type are connected to the shifter bars, or rods. The first is by means of a *sliding shaft*, an example of which is the Pierce-Arrow mechanism, shown in part section in Fig. 9.

In the speed-change mechanism illustrated, the control lever is shown at *a*. Both sliding bars are shown in the end view at *b* and *c*, but only the bar *c* appears in the side view, because *b* lies immediately back of it. The speed-control lever *a* is fastened to a tubular shaft *d* that carries an arm *e* at the end next to the shifting bars. This arm is shown in the side view in engagement with the shifter bar *c*. The tubular shaft *d* can be slid toward the right from the position shown in the end view, so as to disengage the arm *e* from the shifter bar *b* and bring it into engagement with the shifter bar *c*, or as shown in the side view. The control lever *a* moves in slots in a quadrant *f*. These slots are so placed that the lever *a* can be pushed forwards or drawn back only when it is in full engagement with one of the shifter bars. The extent of the movement of the control lever is restricted by the length of the slots in the quadrant. Thus, when the lever is thrown either full forwards or back, the gears with which it is then in connection are set to the proper position for the corresponding speed.

There are two slots in the quadrant in which the control lever moves when shifting the gears. When the lever is near the middle of either slot, the gears are in neutral position. The two slots are connected by an opening—corresponding to the neutral position of the lever—so that the lever can be shifted sidewise to engage either of the sliding bars when the gears are in neutral position. The two slots and the opening between them together appear much like the letter **H**. One of the slots is elongated and is provided with a stop that ordinarily prevents the control lever from going more than the proper distance to set the gears on slow speed forwards. In

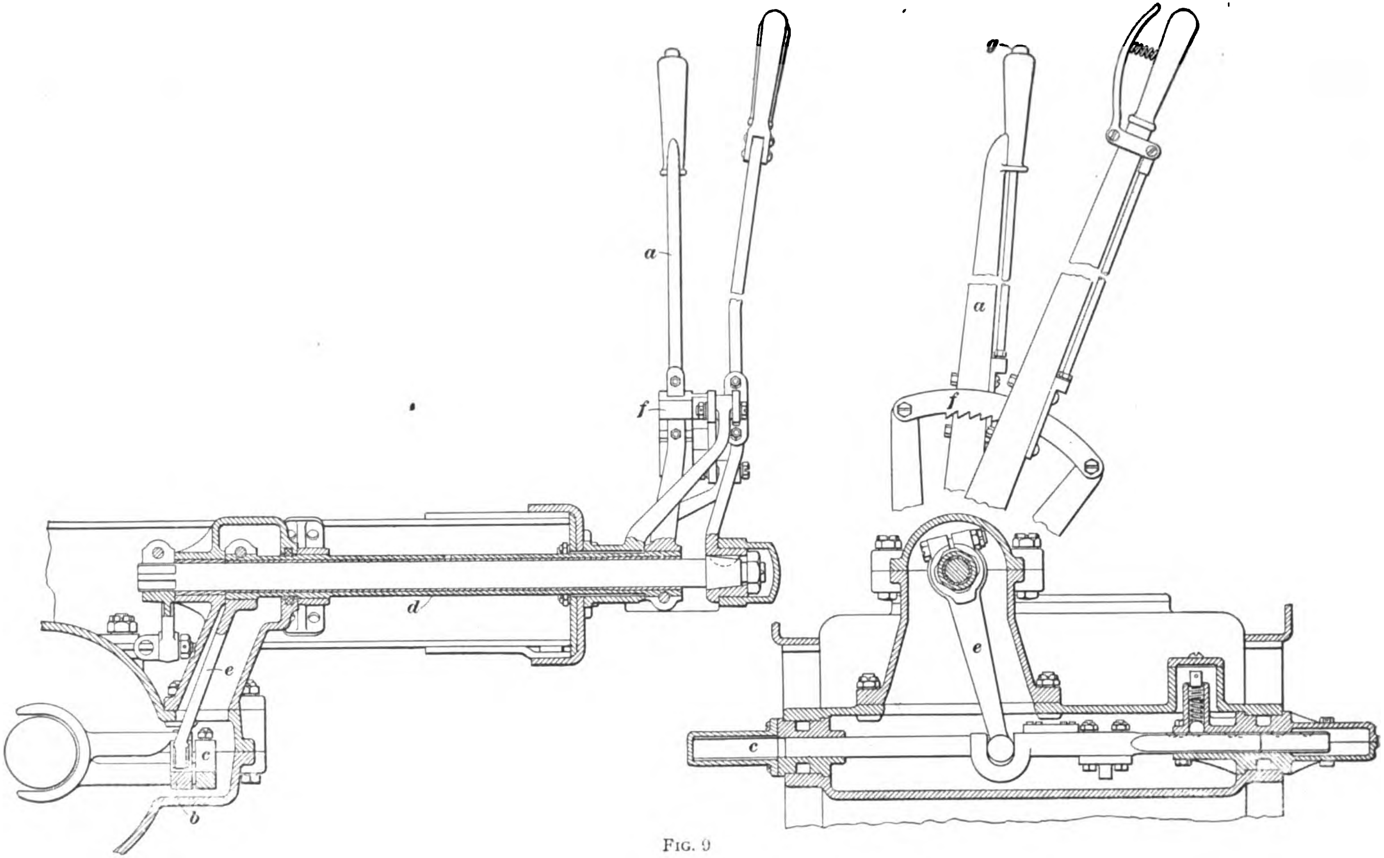

FIG. 9

order to bring the control lever to the reverse position, it is necessary to press down the push button *g* at the top of the control lever. This allows the lever to move far enough to bring the reverse gears into engagement. The stop mentioned is useful, as it prevents the reverse gears from being thrown into action accidentally when shifting the gears during forward travel of the car, but is used in only a few makes of cars.

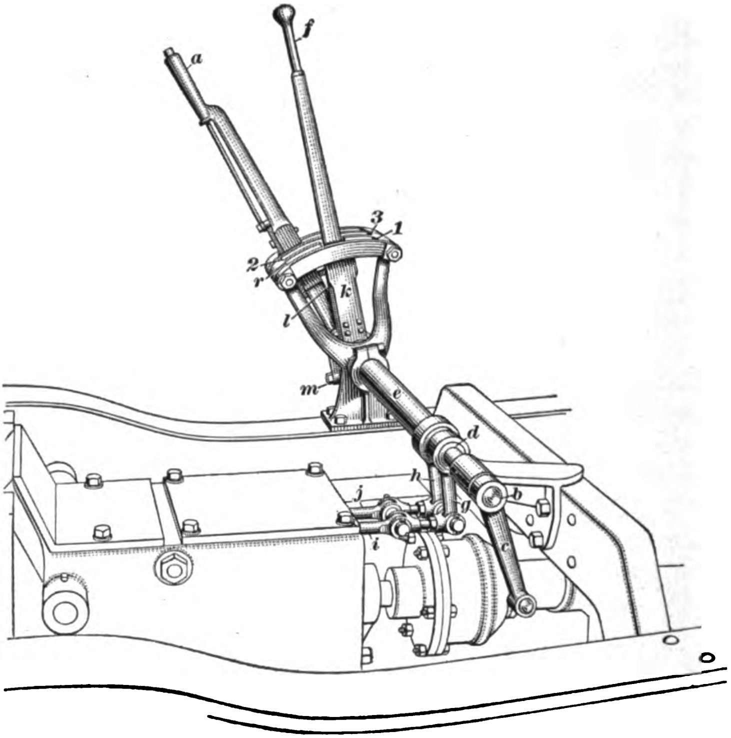

FIG. 10

20. The other method of connecting the control lever with the gears in the selective change-speed mechanism is known as the *swinging-lever type*. An example of this type is found on some models of the Series Eight Cole automobile, the gear-shifting mechanism of which is shown in Fig. 10. The emergency-brake lever *a* operates the shaft *b* and the shaft in turn operates the internal brakes on the hubs of the rear wheels through the arm *c* and the proper connections. Two concentric tubes *d* and *e* enclose the shaft *b* and transmit motion from the change-speed lever *f* through the arms *g* and *h* to the shifter rods *i* and *j*, respectively. These shifter rods, or bars, are the same as those lettered *i* and *j* in Figs. 1 to 5 and by referring to these illustrations in connection with the following, the movements of the gears corresponding to the various movements of the lever *f* can be determined. An arm *k* is attached to the outer end of the tube *e* and a similar arm *l* is secured to the end of the tube *d*. The lever *f* is free to swing sidewise on its pivot *m*, and by swinging it inwards, or toward the car, it may be made to engage between two projections on the arm *k*, and by swinging it outwards it engages between two similar projections on the arm *l*. The movement of the lever *f* is restricted by the slots in the **H** quadrant. When the lever is in the inner slot, it operates the arm *k* and when in the outer slot, it operates the arm *l*. Two flat springs, one on each side of the lever, tend to keep it in a vertical position and hold it upright in the central position in which it is shown, when it is moved to this part of the quadrant.

21. With the control lever *f* in the position shown in Fig. 10, the gears are in the neutral position. First speed is obtained by moving the lever to the rear of the inner slot in the quadrant, or to the point marked *1*. In thus shifting the lever, it engages with the arm *k* and turns the tube *e* so as to shift the bar *j* and throw the slow-speed gear in position. Second speed is obtained by shifting the lever *f* to the forward end of the outer slot, or to the point marked *2*. In making this shift from the low-speed position, the forward movement of the lever in the inner slot disengages the low-speed gear, after which a sidewise motion engages it with the arm *l* and a further forward motion in the outer slot turns the tube *d*, thus shifting the bar *i* and meshing the second-speed gears. Third speed is secured by pulling the lever *f* to the rear end of the outer slot, or to the point marked *3*. In this position the gears are set for direct drive.

During the shift from second speed to third, the tube *d* and shifter bar *i* are again brought into use. In setting for reverse, the lever is brought to the forward end of the inner slot, or to the point marked *r*. In this position, it again engages with the arm *k* and operates the shifter bar *j*, as in the first-speed position.

By passing from one slot to the other, the lever may be brought to any position from any other position. This makes the change-speed gears truly selective.

22. Selective-gear quadrants vary greatly in the arrangement of the different gear positions, thus making it awkward for a driver familiar with one make of car to drive another with the gear positions differently arranged. However, efforts have been made by the Society of Automobile Engineers to remedy this condition by making one arrangement a standard. The preferred arrangements, with the positions marked, for three-speed and four-speed gears of the selective type are shown in Fig. 11. In view (*a*) is seen the arrangement for the three-speed gears, the numbers representing the positions of the lever for the several speeds forward and the letter *R* indicating the reverse position. In (*b*) is presented a quadrant for a four-speed gear-set provided with three shifter bars like that shown in Fig. 7. View (*c*) shows the preferred arrangement of a quadrant for a four-speed gear-set having but two shifter bars, the sliding gears for reverse, first speed, and second speed being operated by the same bar. A gear-set of this type is not truly

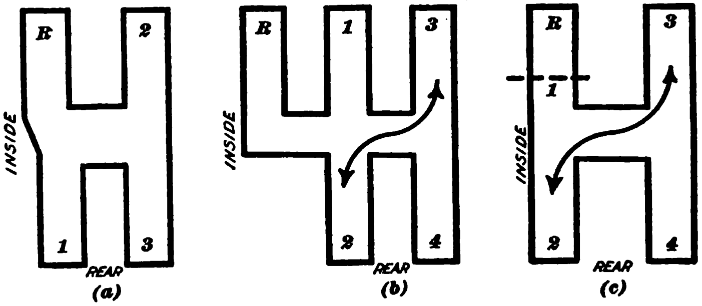

FIG. 11

selective, but is a combination selective and progressive gear-set, because it is obvious that in order to change to the reverse position, it is necessary to go through the first-speed position from any other setting. The dotted line indicates a stop-block that prevents the lever from being accidently thrown into the reverse position. With this type of quadrant a latch must be withdrawn before the gears can be shifted to reverse. The word *inside* represents the side of the quadrant next to the driver, for left-hand drive and center control, or right hand drive and right-hand control, and the word *rear* indicates the end of the quadrant toward the rear of the car.

23. In the progressive type of change-speed mechanism, all the speeds are obtained by a forward and a backward movement of the control lever; no sidewise movement is necessary, because all the sliding gears are shifted by means of a single shifter lever. View (*a*), Fig. 12, shows the arrangement of the control levers on the Stevens-Duryea car, model C-Six, viewed from the right side of the car. These levers are mounted outside of the automobile frame and both swing about the same center. The brake lever *a* may be locked in any position by means of the latch lock *b* that drops into the notches in the quadrant *c*. The latch lock may be disengaged by means of the latch *d*. The brake is applied, through suitable levers and rods, by pressing forwards on the lever *a*.

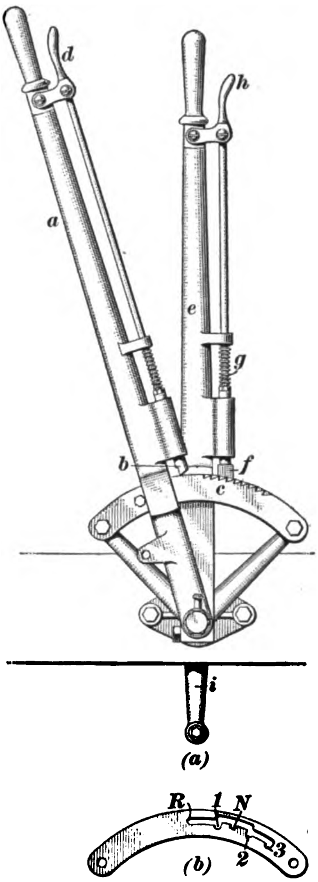

FIG. 12

The lever *e* is the change-speed lever and it operates in a quadrant located immediately to the left of the quadrant *c*, referring to its position in the car. A detailed view of the speed-change quadrant is presented in view (*b*). The lever *e* is provided with a stop *f* that is normally held in the notches in the quadrant by the spring *g*, but that can be disengaged by compressing the latch *h*. The arm *i*, which is operated by a movement of the lever *e*, is connected by means of a rod to

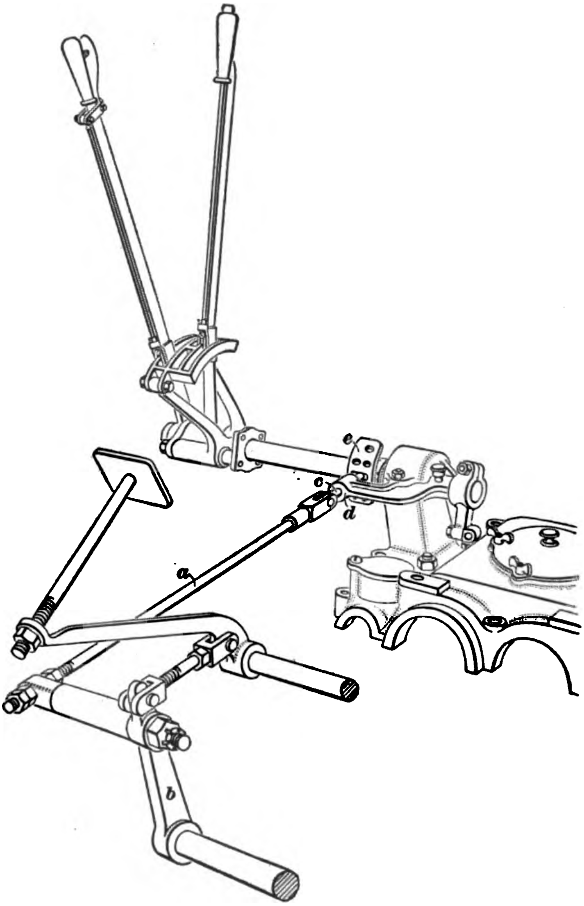

FIG. 13

the shifter lever on the change-speed gears. The various speeds are obtained by moving the lever until the stop drops into the different notches. When the stop is at the extreme rear end *R* of the slot in the quadrant, the reverse gears are thrown in mesh. The first-speed stop is at *1*; the second-speed is at *2*; the third-speed is at *3*; and the gears are in the neutral position when the lever stop *f* is in the notch marked *N*.

24. In a number of automobiles, there is incorporated a device by which the speed-change gears and the clutch-actuating mechanism are interlocked in such a manner that it is impossible to shift the gears without first releasing the clutch, or to engage the clutch unless the gears are in full mesh. With a gear-shifting mechanism provided with such an interlock, the gears are shifted in exactly the same manner as if no interlocking device were fitted. The interlock acts without any special attention from the operator of the car. The advantage of this arrangement is that it prevents injury to the gears from shifting them with the clutch engaged.

The interlocking arrangement incorporated in some models of the Pierce-Arrow car is shown in perspective in Fig. 13. One end of a rod *a* is attached to the arm *b* of the brake-operating mechanism and the other end carries a plunger *c* that is moved forwards or backwards in a guide *d* when the clutch pedal is depressed or released. A sector *e* is carried on the control-lever shaft and it is provided with holes in its surface into which the plunger *c* engages when the control lever is in any of the various speed positions and the clutch pedal is released. When in the neutral position, the plunger engages in a slot running across the face of the sector and parallel with the shaft. By this arrangement the control-lever shaft cannot be rotated, and hence, the gears cannot be shifted unless the clutch pedal is depressed and the plunger *c* withdrawn from the hole or slot in which it is at the moment engaged. Also, the clutch cannot be fully engaged unless the gears are fully meshed and the sector is in one of the positions that will permit the plunger to engage with a hole or the slot and thus allow the clutch spring to act.

PLANETARY CHANGE-SPEED GEARS

25. Definitions.—In the planetary type of change-speed gears, an arrangement of gears, known as an *epicyclic train*, is employed for producing the various speeds. An epicyclic-gear train is a combination of gears in which a gear (or several gears) turns on an axis that itself moves about a fixed axis. On account of the similarity of this motion to that of the planets around the sun, it is commonly called the *sun-and-planet motion*. In a gear-set of this type, the driving member may be a ring or wheel carrying the movable axis or axes, and the driven member a gear on the fixed axis, or the arrangement may be reversed. An epicyclic-gear train may be a combination of both spur and internal gears, when it is known as the *internal-gear type*, or it may be made up of spur gears alone, in which case it is known as the *all-spur type*. The latter type is now used exclusively in pleasure-car change-speed gears; hence, it alone will be dealt with here.

26. Principle of Operation.—A simple epicyclic-gear train of the all-spur type is shown diagrammatically in Fig. 14. An arm *a* joins the two gears *b* and *c* and holds them in mesh. The axis *d* of the gear *b* is fixed, but the arm *a* is free to revolve around this axis and carry the gear *c* bodily with it. Suppose that the gear *b* is held stationary and the arm *a* is turned in the direction of the arrow about the axis *d*. The gear *c* is then carried bodily around the axis *d* and at the same time it rolls on the gear *b* and turns on its own axis *e*.

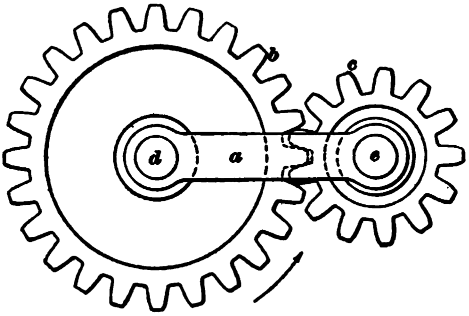

FIG. 14

27. By adding more gears to the simple train shown in Fig. 14 a combination can be obtained whereby the driven member may be made to rotate at different speeds by holding different gears stationary. Fig. 15 shows a *reverted gear-train* such as is utilized in the planetary system of speed-change gears. However, this illustration does not show a complete speed-change mechanism, but simply shows the principle involved. The gears *a* and *b* are free to revolve about the common axis *c*, which is immovable. Meshing with *a* and *b* are two pair of gears consisting of two gears each, *d* and *e*, that are fixed to each other and revolve together. The gears *d* and *e* are mounted on a ring that is free to move; hence, these gears not only turn on their own axes, or centers, but

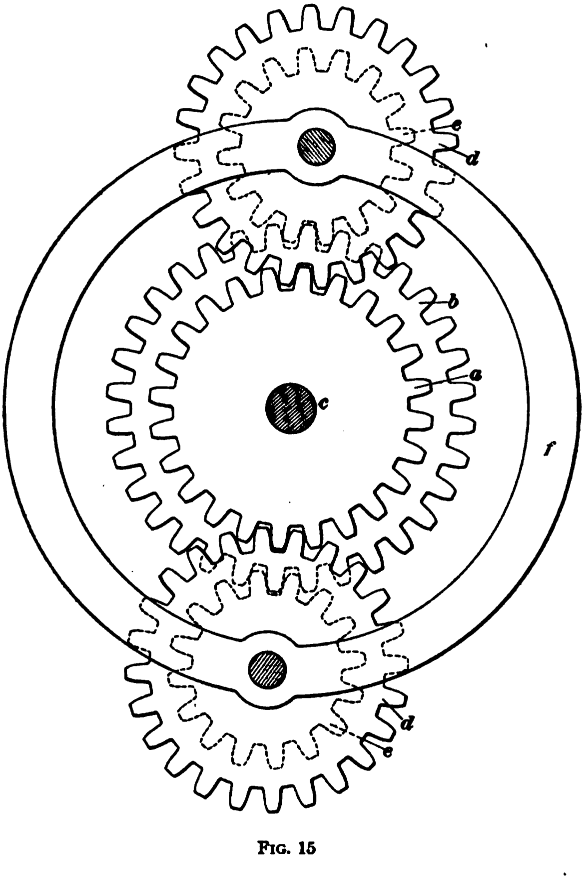

Fig. 15

they can be carried bodily around the gears *a* and *b* by revolving the ring *f*.

With the arrangement of gears shown in the illustration, the following planetary motions may be obtained:

First, assuming that the ring is the driving member and the gear *b* the driven member, a slow speed forwards may be imparted to the gear *b* by holding the gear *a* stationary and revolving the ring. During this operation each gear *d* rolls on the gear *a* so that it turns on its own axis and at the same time moves bodily around the fixed center *c*. Each gear *e*, being fixed to the gears *d*, is carried about with them and being in mesh with the gear *b*, it imparts a certain motion to *b*. Each gear *e* being smaller than *d*, the velocity of its teeth is less; hence, as it moves around the center *c*, the gear *b* is turned slowly in the same direction as the ring *f*. The relative speeds of the gear *b* and the ring depend on the relative sizes of the gears *a* and *d* and the gears *b* and *e*.

Second, assuming that the ring is the driving member and the gear *a* is the driven member, a motion in the opposite direction to that of the ring may be imparted to the gear *a* by holding the gear *b* stationary and revolving the ring. During this operation, each gear *e* rolls on the gear *b*, as the ring is turned, and carries *d* about with it. In this case, as the teeth of the gears *d* have a higher velocity than those of the gears *e*, the gear *a* is slowly turned backwards, or in a direction opposite to that in which the ring revolves.

28. Two-Speed Planetary Transmission.—The representative planetary transmission is the Ford all-spur system, used in the model T car, which is designed to give two speeds forwards and a reverse. The manner in which the reverted epicyclic-gear train is applied to this gear-set is shown in Figs. 16 and 17, Fig. 16 being an external view and part section of the transmission in its case, and Fig. 17 a sectional view of the system removed from its case. Like parts in the two illustrations are lettered the same as far as possible.

The driving member in this case is the engine flywheel *a*. The flywheel carries on studs three clusters of three gears each,

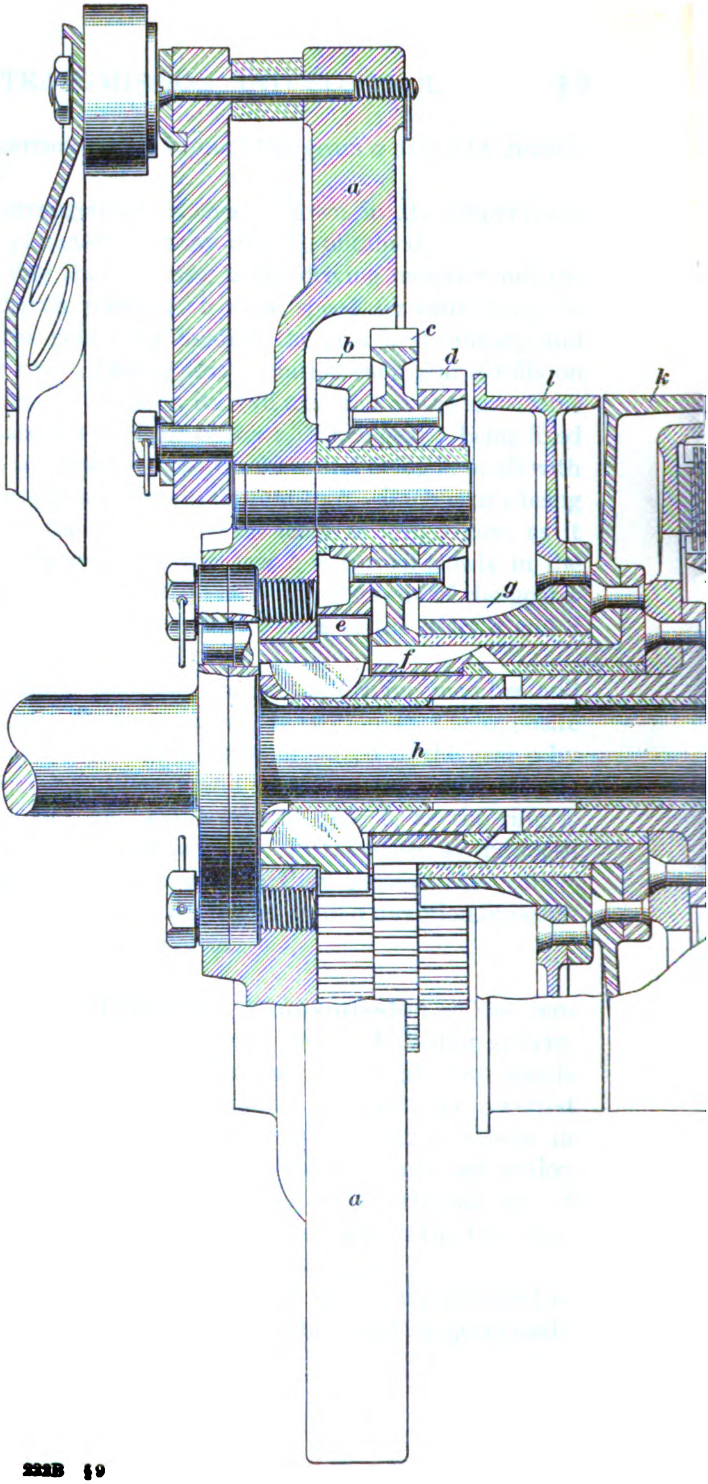
a
b
c
d
l
k
g
e
f
h
a

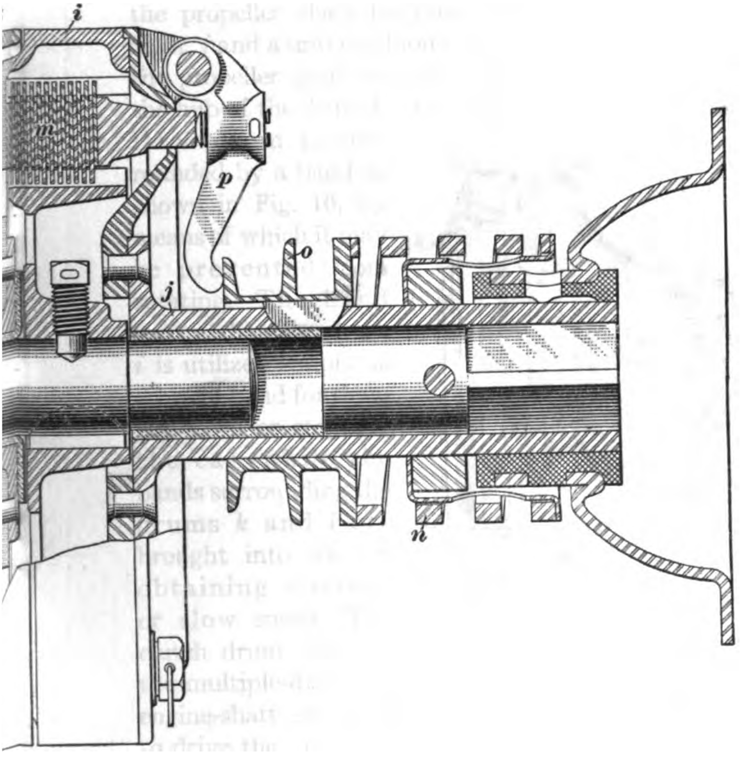

Fig. 17

b, *c*, and *d*; these gears are fixed to each other and are free to turn on the studs. The three groups are arranged at equal intervals around the flywheel and the gears constituting the groups mesh with three other gears *e*, *f*, and *g* that are supported by an extension *h* of the crank-shaft, as seen in Fig. 17. The gear *e* is the driven member and is keyed to a sleeve that forms the hub of the clutch drum *i*. The drum *i* is joined to the propeller shaft by means of a second sleeve, or hollow shaft, *j* and a universal joint; hence, when the gear *e* is revolved, the propeller shaft revolves with it. The gear *f* is formed on the hub of the drum *k*, and the gear *g* on the hub of the drum *l*. Each drum is surrounded by a band as shown in Fig. 16, by means of which it may be prevented from rotating. The band surrounding the drum *i* is utilized simply as a brake band for slowing down or stopping the car, while the bands surrounding the drums *k* and *l* are brought into use for obtaining a reverse or slow speed. The clutch drum contains the multiple-disk clutch *m*, by means of which the drum and engine-shaft extension *h* can be connected when it is desired to drive the propeller shaft at crank-shaft speed.

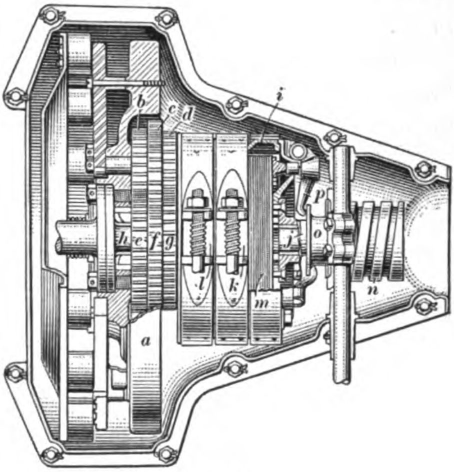

FIG. 16

29. Low speed forwards is obtained in the Ford change-speed gear by tightening the band that surrounds the middle drum *k*, thus preventing the gear *f* from rotating. The three gears *c*, carried around by the flywheel, roll on the gear *f* and turn the gears *b* and *d* with it. Motion is imparted to the gear *e* from *b*, and as *b* has a smaller number of teeth than *c*, this motion is in the same direction that the flywheel revolves, but at a slower speed. The propeller shaft being directly connected to the gear *e*, is, therefore, driven at a slow speed in the direction of rotation of the engine crank-shaft, and a slow speed forwards is imparted to the car. During this operation, the gear *g* and the drum *l* are driven idly by the three gears *d*.

The reverse speed is obtained by releasing the band on the drum *k* and tightening that on the drum *l*. This operation prevents the gear *g* from revolving and causes the three gears *d* to roll about *g*. The gears *b* and *c* are of course carried around with *d*; hence, a reverse motion is imparted to *e*, because the gears *b* have a larger number of teeth than the gears *d*. The propeller shaft is, therefore, rotated in a direction opposite to that in which the flywheel revolves, and the car is driven backwards. During this operation the gear *f* and the drum *k* are driven idly by the three gears *c*.

High speed forwards is obtained by engaging the multiple-disk clutch *m*, thus locking the shaft *h* and the clutch drum *i* together and driving the propeller shaft at the same speed as the engine shaft revolves. The clutch is held in engagement by means of the spring *n*, which surrounds the sleeve *j* and forces the disks together by means of the sleeve *o* and the levers *p*.

When assembled on the car, the various bands and the clutch are operated by a single lever and three pedals, which are connected up through suitable operating mechanism.

FRICTION-GEAR TRANSMISSION

30. The **friction-gear transmission** makes use of a friction disk and a friction wheel running at right angles to each other for changing the speed of the car in relation to the engine speed. The friction units are so arranged that a separate friction clutch is unnecessary; the engine can be disconnected from the transmission mechanism by withdrawing the disk from the wheel and allowing the disk to run idly. With this speed-change gear, an infinite number of speeds may be obtained by varying the point of contact between the friction wheel and the disk.

31. A typical example of the friction-gear transmission is the Cartercar system, which is shown in Fig. 18. In this transmission, the friction disk *a*, which is driven by the engine, drives the fiber-faced wheel *b*, which, in turn, propels the rear axle by means of a chain that is enclosed in an oil-tight case *c*. The disk *a* is connected to the engine by a short shaft containing a sliding connection that allows the disk to be engaged with the friction wheel by a pressure on the pedal *d*. The wheel *b* is mounted on a transverse shaft *e* in such a manner that it can be made to move across the face of the disk *a* from one side to the other and drive the shaft *e* in any position.

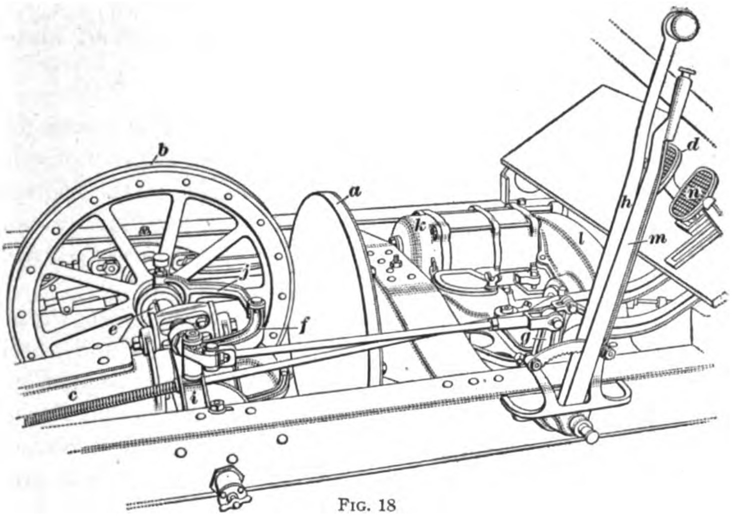

FIG. 18

The friction wheel *b* is shifted by a bell-crank *f* connected to a crank-arm *g* of the control lever *h*. The bell-crank is pivoted to a bracket *i* and carries a drag link *j*, through which the wheel is moved.

As the linear speed of points at different distances from the center of the disk *a* varies from zero at the center to a maximum at the periphery, or outer edge, the rotative speed of the friction wheel depends on its distance from the center of the disk. Thus, to obtain a slow speed, the friction wheel *b* is shifted toward the center of the disk *a* by a rearward movement of the control lever *h*, and to obtain higher speeds it is shifted toward the periphery by a forward movement of the lever. To obtain a reverse, the friction wheel is shifted past the center of the disk *a*, when the direction of rotation of the wheel, and hence of the driving wheels of the car, is reversed. The neutral position is obtained by simply releasing the pedal, when the disk is free to revolve without transmitting motion to the friction wheel. In this car the action of the pedal *d* is the opposite of that of the clutch pedal in the ordinary sliding-gear change-speed mechanism. Depressing the pedal *d* engages the friction disk and wheel and starts the car. A locking device is provided by means of which the friction surfaces can be held in contact without keeping the foot on the pedal.

32. The electric starting motor, which furnishes power for cranking the engine, is shown at *k*, Fig. 18. This motor is connected to the shaft running from the engine to the friction disk by a silent chain that is encased in an oil-tight case *l*. The emergency-brake lever is shown at *m* and the service-brake pedal at *n*. These are operated as on any other car.

Various forms of friction-gear transmissions have from time to time been devised, but that employing the disk and wheel as just described is practically the only one now in use on pleasure vehicles. A system very much the same as that shown in Fig. 18 is used on the Metz car; in this case, however, a double chain drive is employed between the cross-shaft and the rear axle.

ELECTRIC GEAR-SHIFTING MECHANISM

33. The sliding change-speed gears thus far described are designed to be operated manually by a lever. With the **electric gear-shifting mechanism**, the work of changing the speeds is accomplished by means of electromagnets having the form of solenoids with a movable core, instead of by hand. By *solenoid* is meant an electromagnet consisting of a coil of insulated wire wound helically around a cylindrical soft-iron core, which becomes magnetized as soon as an electric current is sent through the coil of wire. The particular form of solenoid used in the electric gear-shift has a hollow cylindrical coil of wire that surrounds a cylindrical iron core free to move in the direction of its length, the coil of wire being stationary. If the iron core is partly withdrawn from the coil and an electric current is sent through the coil, this will attract the iron core and tend to draw it back inside the coil.

The electric gear-shift as applied to the sliding-gear type of transmission, has one solenoid for each speed forwards, and one for the reverse. The operation of the solenoids is controlled by means of a push-button switch, or *selector*, located on the steering wheel, and a *master switch* that is operated by the clutch pedal.

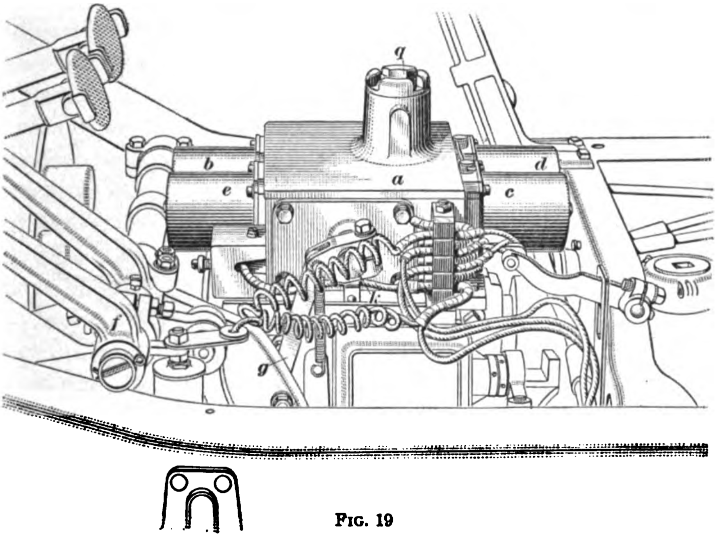

FIG. 19

34. The Vulcan electric gear-shift as applied to the Haynes, models 26 and 27, cars is shown mounted on the chassis in Fig. 19. The shifting mechanism, which is here viewed from the left side of the car, is contained in a separate housing *a* and is located on top of the change-speed gear casing. The transmission on this car is of the selective sliding-gear type, giving three speeds forwards and a reverse; hence, four electromagnets, or solenoids, *b*, *c*, *d*, and *e* are required for manipulating the speed changes. The neutral position of the gears is mechanically obtained by depressing the clutch pedal *f*, which is connected to the shifting mechanism by the link *g*.

As shown in Fig. 20, in which the mechanism is viewed from the right side of the car and with the cover removed, the gears are shifted, just as in the hand-operated mechanism, by means of two shifter bars, one of which is shown at *h*, that are drawn endwise by the magnetizing of the solenoids. When the low-speed solenoid *b* is magnetized, a pull of 150 pounds is exerted on the corresponding shifter bar and it is drawn forwards, shifting the gears through an ordinary shifter fork. As soon as this operation is completed, the current is cut off from the solenoid and the gears remain in mesh as in the hand-operated system, until another change is desired, or until the gears are thrown into neutral by means of the clutch pedal. The action of the other solenoids is similar to that of the low-speed magnet; the solenoid *c* pulls the gears into second speed, *d* pulls them into third, or high, speed, and *e* pulls them into the reverse position.

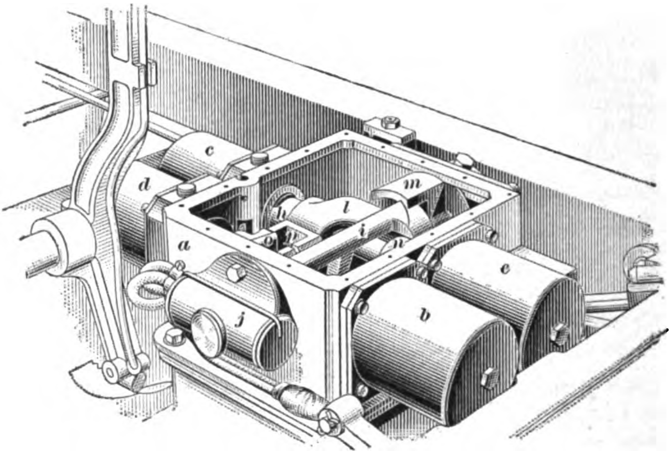

FIG. 20

35. The speed-change gears on the Haynes car are shifted from any position into neutral mechanically by means of the yoke *i* in Fig. 20, which extends crosswise above and below the shifter bars and is pivoted at each end so that it is free to rotate. However, the yoke tends to remain in the central position shown, being restrained by means of a *master lock*, or spring, contained in the casing *j*. Each shifter bar is fitted with two lugs, or stops, one above and one below, one of which always engages with the yoke *i* when a gear-shift is made, pulling it around in a clockwise direction, as viewed in Fig. 20, and against the resistance of the master lock *j*.

Referring to Fig. 19, the shaft *k* carries a latch just inside of the casing *a*, by means of which the yoke *i*, Fig. 20, is turned when the clutch pedal is depressed. For instance, when the gears are shifted to the reverse, the solenoid *e* draws the bar *h* forwards, at the same time engaging the lug *l* with the yoke *i* and pulling it around. The gears can then be thrown into neutral by a pressure on the clutch pedal, which revolves the latch on the shaft *k*, Fig. 19, and thus brings the yoke back to its center position, pulling the bar *h* and the sliding gear with it. Just as the yoke reaches this position, the stationary cam *m* trips the latch, so that the yoke is again free to be rotated by some other lug. The latch, of course, assumes its original position when the clutch pedal is released.

In the case of the second-speed gear-shift, the lug *n*, which extends below the bar *h*, engages with the lower part of the yoke *i* and turns it in the same direction as it was turned by the lug *l*; hence, the action of the latch when the clutch pedal is depressed is identical to that in the case of the reverse gear-shift.

A similar action occurs when the other solenoids, *b* and *d*, are brought into use, the shifter bar in this case being concealed by the casing *a*; one of the lugs, however, is shown at *o*. On account of an interlocking device in the push-button switch, or selector, it is impossible to magnetize more than one solenoid at a time; hence, there can be no conflict in the action of the electromagnets.

36. In the event of a failure of the electric gear-shifting mechanism to work, or if for any other reason it is desired to shift the gears by hand, a control lever may be inserted in the slot *p*, Fig. 20, by removing the cap *q*, Fig. 19, which extends upwards through the floorboards of the car. The lever can then be used like the ordinary control lever for a selective-transmission system.

37. The arrangement of the selector push buttons on the steering wheel of the Haynes is shown in Fig. 21. The selection of the desired gear-change is made with these buttons and each one is plainly marked to show the speed that it controls, as shown. The button that is used for securing first, or low, speed is marked *1*; that used for second speed is marked *2*; that for third, or high, speed is marked *3*; and that for reverse is marked *R*. The neutral position is selected by means of the button marked *N*. The buttons *H* and *S* operate the electric horn and starting motor, respectively.

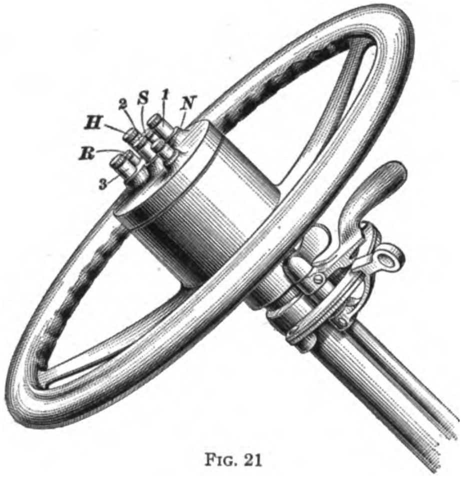

Fig. 21

On some cars, the buttons are arranged in a straight line on one of the spokes of the steering wheel, while in other cases they are arranged on a switch directly beneath the wheel.

Current for magnetizing the solenoids is obtained from the storage battery used in connection with the electric lighting and starting system. The master switch, by means of which the proper solenoid is finally put in electrical connection with the battery, is mechanically operated by the clutch pedal; pushing the pedal all the way down engages this switch and magnetizes the solenoid selected by the selector on the steering wheel. The master switch is located between the clutch shaft and the shifting mechanism. It is made in a variety of forms, but usually consists of a simple knife switch that is engaged by means of a cam that is rocked by the clutch shaft.

38. A simple wiring diagram for the electric gear-shift is shown in Fig. 22, where the solenoids are marked the same as in Figs. 19 and 20. The master switch *r* is common to all the solenoids, but in order that a solenoid may be magnetized it is also necessary that electrical connection be made at the corresponding button. The neutral button *N* is not connected in the circuit, but when pressed, it releases all the other buttons; that is, opens the circuit at each one. The buttons are provided with a mechanical interlock so that one button only can remain in position at a time.

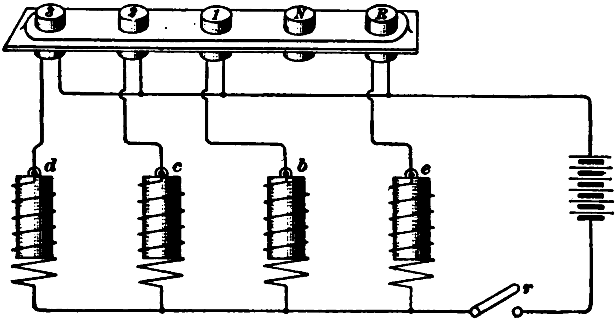

FIG. 22

39. With the engine running and the gears in the neutral position, a shift to first speed is made with the electric gear-shift by pressing down the first-speed button and then closing the master switch by pressing the clutch pedal clear out. The first-speed solenoid becomes magnetized and the gears are drawn into the first-speed position, after which the clutch pedal may be released and the clutch engaged in the usual manner. Any other speed change may be made by pressing down the required button and then pushing down the clutch pedal. Each time a change is made the clutch is first released and then the gears are thrown into neutral by the mechanical connection to the clutch pedal, which has been previously explained; hence, there is no danger of shifting gears with the clutch engaged and thus stripping gears. The gears can be thrown into neutral at any time by pressing in the neutral button and pushing the clutch pedal forwards, although in this operation it is only necessary to push the pedal far enough to mechanically shift the gears, it not being necessary to close the master switch, as there is no neutral solenoid.

40. With the electric gear-shift, the clutch may be released at any time by shoving the pedal forwards part way without disturbing or changing the setting of the speed-change gears. When driving on a certain speed, the driver may at any time select the next speed to which he wishes to change and press down that button. He can then make the change when he desires by simply pressing forwards on the clutch pedal and then releasing it.

PNEUMATIC GEAR-SHIFTING MECHANISM

41. The **pneumatic gear-shifting mechanism,** as the name implies, makes use of compressed air, instead of hand power or electricity, for shifting the speed-change gears. The Gray pneumatic gear-shifting device, which can be applied to many cars that are fitted with a sliding-gear transmission, is shown partly in section in Fig. 23. The air pressure for operating this device is obtained from a double-acting, two-cylinder, air compressor that is located alongside of the engine. The compressed air is stored in a tank located under the body of the car. An air pressure up to 300 pounds per square inch is automatically maintained in the tank.

42. Referring to Fig. 23, the main casting *a* is bored out, forming a cylinder in which a piston *b* works. A sliding distributor valve *c* regulates the admission of the air to the cylinder and the exhaust from it. There is but one intake connection *d*, which is controlled by the valve *e*; this valve is in turn lifted by the bell-crank *f* that is operated by the rings on the distributor valve *c*. A single exhaust passage *g* provides a way of escape for the air from each end of the cylinder.

A selector disk *h* carrying a latch *i* is operated by the piston *b*, being rigidly attached to the piston rod and outside the cylinder *a*. This disk *h* is free to slide endwise on the shaft *j* but is keyed to it so that it can be turned by rotating the shaft. The latch *i* can be turned by the shaft *j* and made to engage with notches in the shifting racks *k* and *l*. The racks *k* are connected to the shifting bars of the regular speed-change mechanism. With the ordinary three-speed gear-set only two of these racks are used, but with a four-speed gear-set all the racks are used. The racks *l* are idler racks, by means of which the motion of the two outer racks *k* can be reversed through connecting pinions, one of which is shown at *m*.

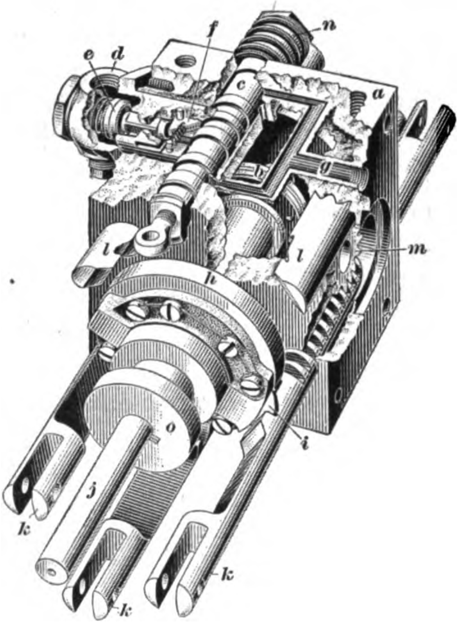

FIG. 23

43. Gear shifting is accomplished by the device shown in Fig. 23, by engaging the selector latch *i* with the notch in the required shifting rack and forcing the rack forwards by the admission of air into the cylinder. The selector shaft *j* is connected to the selector quadrant on the steering column and the desired gear is selected by turning the selector shaft so that the latch *i* engages the rack operating the particular gear selected. The sliding valve *c* is drawn forwards by depressing the clutch pedal to which it is attached by a cable or rod. The valve is moved to its original position by the spring *n* when the clutch pedal is released, after the gears have been shifted.

A shift is made to any speed by first selecting that speed by means of the selector quadrant and then depressing the clutch pedal all the way and releasing it. A half depression of the clutch pedal admits air to the selector end of the cylinder at the instant the clutch is fully disengaged and forces the gears to the neutral position by means of the selector disk *h*. Each shifter rack is made with a shoulder and on this movement of the piston, that rack that is not in the neutral position is shifted back into it by the disk engaging with the shoulder. The full depression of the clutch pedal opens the exhaust passage from the selector end of the cylinder and at the same time admits air into the other end. The piston is then forced forwards carrying with it the particular shifting rack engaged by the selector latch *i*.

44. The advantages of the pneumatic gear-shifting mechanism are practically the same as those of the electric gear-shift. Any gear-shift can be made without removing the hands from the steering wheel. Also, as in the electric gear-shift, the gears are always brought to the neutral position before a shift is made, and, likewise, the clutch must always be disengaged. This obviates the danger of shifting gears with an engaged clutch.

A hand lever is furnished with this gear-shifting device to be used in case the pneumatic mechanism becomes inoperative for any reason. The hand lever is used by connecting it to the collar *o* on the selector shaft and thus shifting the disk *h*.

TWO-SPEED BEVEL-GEAR REAR AXLE

45. In the ordinary rear-axle construction there is a fixed ratio between the speed of the drive shaft and that of the axle. A bevel pinion on the end of the propeller shaft or, in the case where the speed-change gears are located at the rear, on the end of the transmission drive shaft, meshes with the large bevel driving gear on the differential and drives it at a constant speed ratio. The ratio between the speed of the engine and that of the rear wheels when running on direct drive is always the same with this arrangement.

In order to secure more than a single speed ratio on direct drive and thus make a more flexible transmission, the *two-speed direct-drive rear axle* is being used in some cars. This device makes use of two bevel pinions of different sizes that mesh with two bevel driving gears on the differential. Either one of the bevel-gear sets can be brought into use by the driver, so that two distinct gear-ratios are available. This device in no way affects the regular change-speed gears; hence, six different speeds forwards can be obtained with an ordinary three-speed transmission and a two-speed axle, or eight speeds can be obtained with a four-speed gear-set.

46. The two-speed rear axle used on some models of the Cadillac car is shown in perspective in Fig. 24 and in section in Fig. 25. Referring to Fig. 24 the bevel pinions are shown at *a* and *b* in mesh with the bevel driving gears *c* and *d*, respectively. These four gears are always in mesh, as shown, but the driving-mechanism arrangement is such that but one pinion can receive power from the engine at a time. The large gears *c* and *d* are both attached to the differential, and the rear axle can be driven equally well through either one. The low-speed ratio, or that between the gears *b* and *d*, is 3.66 to 1, while the high-speed ratio, or that between the gears *a* and *c*, is 2.5 to 1.

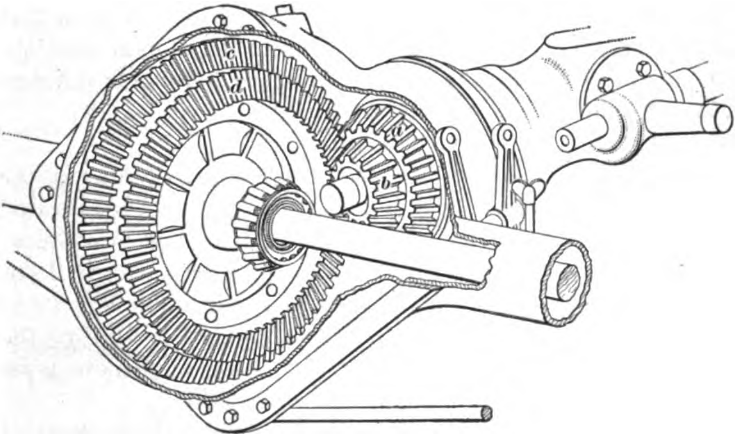

Fig. 24

47. The bevel pinions are driven from the propeller shaft through a jaw clutch *e*, Fig. 25, which can be made to operate only one pinion at a time. This clutch is in the form of an internal gear driven from the propeller shaft and is so arranged that it can be engaged either with the clutch member *f* resembling a spur gear on the end of the hollow shaft *g* carrying the small pinion *b*, or with the clutch member *h* on the end of the sleeve *i* that carries the large pinion *a*. The clutch *e* is free to slide on the extension *j* of the propeller shaft, but is prevented from rotating on it by means of splines. The hollow shaft *g* turns on Hyatt roller bearings *k* that are mounted between this shaft and the shaft *j*, while the outer sleeve *i* turns on Timken roller bearings *l* that are mounted between this sleeve and the housing. For shifting the jaw *e* forwards or backwards a shifting shaft *m* is provided. This shaft carries a yoke *n* that engages with the clutch *e* and transmits the motion from the shifting shaft to the clutch. An ordinary bevel-gear differential *o* is employed for driving the rear axle.

48. The jaw clutch for changing the speed ratio of the driving gears in the Cadillac two-speed rear axle is operated by means of the regular engine-clutch pedal used in conjunction with an electric switch that is located on the right front door of the car. The pedal is connected by suitable levers and rods to the shaft *m*, Fig. 25, and is used for actually shifting the jaw clutch, while the electric switch controls a magnetic latch that does the selecting of the gear combination.

For instance, if it is desired to make use of the high-speed ratio, the switch lever is held forwards and the clutch pedal is depressed. For changing to the low-speed ratio, the switch lever is held back and the clutch pedal depressed. Under the first condition, the jaw clutch is engaged with the clutch member *h* and the differential is driven through the pinion *a* and the bevel gear *c*, while under the second condition, the jaw engages with the clutch member *f* and the small pinion *b* and the bevel gear *d* are brought into use. Because of the construction of the jaw clutch, it is impossible to drive both bevel pinions at the same time.

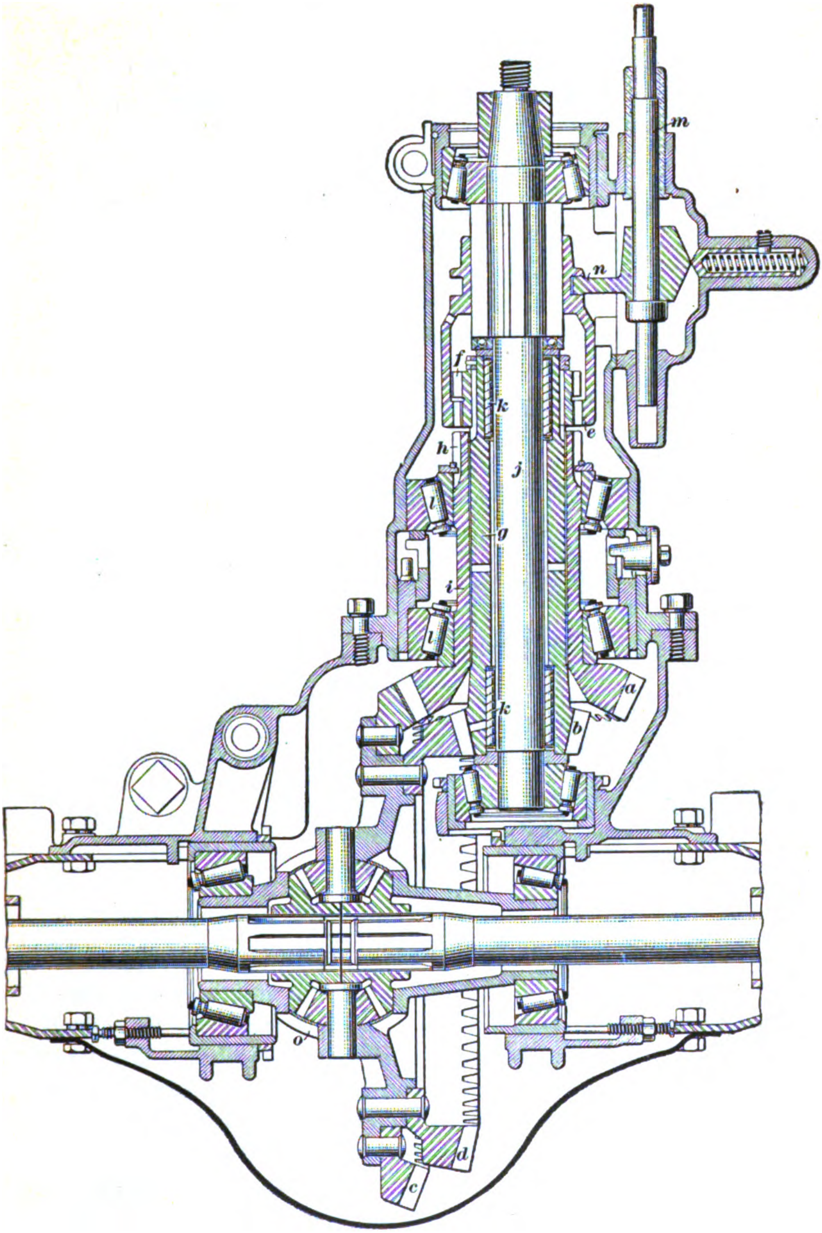

FIG. 25

POWER TRANSMISSION DETAILS

UNIVERSAL JOINTS

49. Main-Drive Couplings.—The universal joint, or coupling, is a coupling used to connect two shafts, the center lines of which are in the same plane, but which make an angle with each other. In an automobile fitted with a shaft-drive rear axle, one or more universal joints must be provided between the engine and the rear axle, in order to make up for lack of alinement between the engine and the axle, due to construction, and also for disturbance of alinement due to play of the springs.

In addition to providing for lack of alinement, it is necessary on a propeller-shaft drive to make provision for any variation in the distance between the change-speed gears and the rear axle or between the clutch and the change-speed gears, as the case might be, occasioned by the play of the rear springs. In practice, this is allowed for either by constructing the universal joint so that it permits a certain *slip* within itself, or by providing the joint with a sliding connection, or *slip sleeve*.

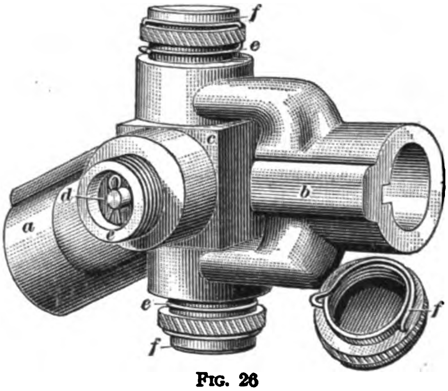

FIG. 26

50. One of the most widely used types of universal joints is the *cross type*, one form of which, as made by the Blood Brothers Machine Company, is shown in Fig. 26. The joint consists of two forks *a* and *b*, and a cross formed of two members or pins, one passing through a hole crosswise in the enlarged portion of the other, and both passing through a *center block c*. One of the pins is shown at *d*. The pins turn in bushings *e*, which are of hardened steel, one end being forced into the holes in the forks while the other projects outwardly to form a longer bearing surface, and is threaded for the grease caps *f*. The center block *c* is a steel cube that fits between the forks and serves to center them and keep them in adjustment. The forks *a* and *b* are intended to be keyed or brazed to the ends of the shafts that they connect, or one fork may be provided with a sliding joint that allows endwise motion of the propeller shaft. The fork *a* is free to turn on the cross-pin *d*, and the fork *b* on the pin at right angles to *d*, thus forming a flexible coupling that may be used to connect two shafts that make an angle with each other.

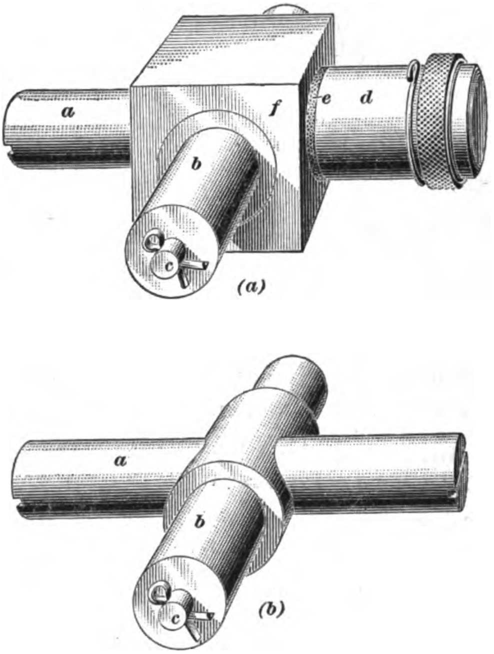

FIG. 27

51. The method of assembling the pins and center block in the universal joint just described is shown in Fig. 27. The pin *a* passes through a hole in the pin *b*, which is enlarged in the middle as shown in view (*b*). This prevents the enlarged pin from moving endwise. The smaller pin *a* is locked by a third pin *c*, which passes longitudinally through the center of *b* and crosswise through *a*. A bushing with its grease cap is shown in place at *d*, view (*a*). A felt washer *e* is placed between the bushing *d* and the center block *f* and prevents the oil or grease from coming out and the dust from getting in.

The joint can be disassembled by taking off the grease caps and then withdrawing the pins *c* and *a*. In order to take out the enlarged pin, one of the steel bushings must be removed.

52. A Spicer universal joint, which is of the *ring type*, is shown partly disassembled in Fig. 28. The four bearing pins are carried on a *journal piece*, or *ring*, *a* that serves to join the forks *b* and *c*. Each journal turns in a hardened-steel bushing *d*. When assembled, the casing *e* is bolted to the flange *f* and the casing *g* fits over the end of the casing *e*. The casing *g* is held in place by means of a clamp that is screwed on the end of the fork *b*. The joint is lubricated through a hole that is normally closed by a screw *h*. A sliding connection may be attached to the yoke *b*, in order to provide for any endwise motion.

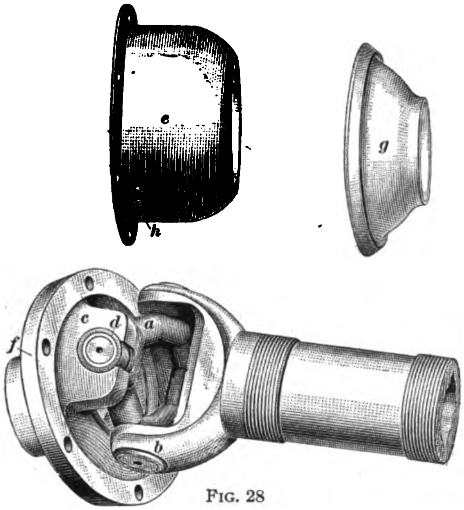

FIG. 28

53. A universal joint of the *roller type*, such as is used in some models of the Peerless car, is shown in Fig. 29. A cross *a* on the end of the propeller shaft carries two rollers *b*, which roll in steel yokes *c* in the other half of the joint. The cross and rollers are shown withdrawn from the yoke. The joint is normally protected from dust by a telescoping leather and aluminum cover, which also acts as a grease retainer. The yoke is made long enough to provide for any necessary endwise slippage.

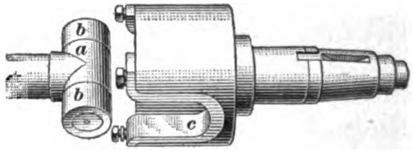

FIG. 29

54. A type of universal joint that is widely used is known as the *block-and-trunnion type*. One member of this joint consists of a slotted jaw *a*, Fig. 30, that contains a square hole *b* in which the squared end of the shaft fits. The second member is a **T** head attached to the end of the other shaft. This head consists of the rounded center piece *c*, carrying two arms upon which the bronze or steel blocks *d* are free to turn. When assembled, the blocks are inserted in the jaws of the member *a* where they are free to slide and permit the desired universal motion. This joint also acts as a slip joint, taking care of any variation of distance occasioned by the jouncing of the automobile on rough roads. The joint is enclosed in a pressed-steel casing *e* that is fastened to the member *a* and that contains plugs *f* through which grease can be injected for lubrication. A helical spring is usually placed between the face of the center-piece *c* and the member *a*, in order to give a cushioning effect. Generally, the head *c* is attached to the end of the propeller shaft and the member *a* to the transmission shaft or differential pinion shaft. A leather boot is usually fitted over the end of the joint to serve as a protection from dust and to help contain the lubricant.

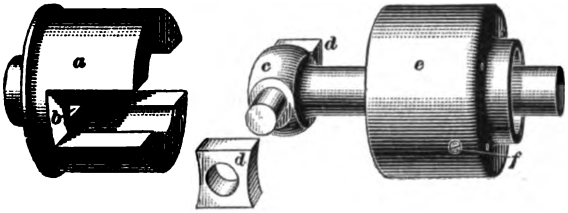

FIG. 30

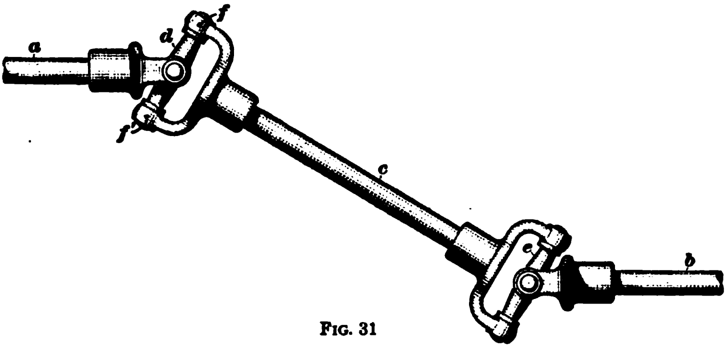

FIG. 31

55. A single universal joint of any type has the peculiarity of not transmitting motion through an angle with a uniform speed. For instance, suppose that in Fig. 31 the shaft *a* represents the main-drive shaft from the transmission and the shaft *b*, the shaft driving the rear axle, the two being connected by the propeller shaft *c*, assuming the change-speed gears to be located at the forward end of the propeller shaft. The angle through which the motion is transmitted is made large, in order to show clearly the relative positions of the joints.

Considering only the universal joint connecting the driving shaft *a* and the propeller shaft *c*, if the shaft *a* rotates at a uniform speed, the shaft *c* will not rotate uniformly, but its speed will increase and then decrease four times during each revolution. This alternate increasing and decreasing of the driven shaft is due to the alternate increasing and decreasing of the radii through which the forks of the joint revolve. For instance, in the position shown in Fig. 31, a point *f* is at a certain perpendicular distance from the center line of the driving shaft *a*, but this distance gradually increases as the shaft *c* turns through the next quarter of a revolution. The linear velocity, therefore, of the point *f* also increases, provided that the speed of the driving shaft *a* remains uniform. During the second quarter of a revolution, the speed of the point *f* decreases until the point reaches the position marked *f'*, after which the speed again increases for a quarter of a revolution. On the fourth quarter of a revolution, the speed of the point *f* decreases until it reaches the position shown in the illustration. The speed of the shaft *c* varies with that of the point *f*, which is fixed with reference to *c*; hence, the driven shaft *c* will not rotate uniformly if the driving shaft *a* moves at a uniform speed.

56. By the proper use of a universal joint at each end of the propeller shaft, however, the shaft *b* can be made to rotate at the same speed as the shaft *a* during all parts of a revolution. In other words, the connection between the shafts *b* and *c* can be made to counteract the variable speed of the shaft *c* as produced by the connection between the shafts *c* and *a*. In order to do this, it is only necessary that the forks on the shaft *c* shall lie in the same plane. This may be otherwise expressed by saying that the shaft *c* must have such a form that if it is removed with the attached forks from the crosses *d* and *e* and placed on the floor, it will lie flat. It is also required that the shafts *a* and *b* make equal angles with the intermediate, or propeller, shaft *c*. This, of course, is the case when the shafts *a* and *b* are parallel, as shown in the illustration.

57. Magneto-Shaft Couplings.—The couplings used for connecting up magnetos and other auxiliary apparatus are usually made with a certain degree of flexibility, in order to provide for defects in shaft alinement; hence, these are in reality a form of universal joint. Several varieties of magneto-shaft couplings are in use, the prime object in each case being to secure silence in running combined with flexibility.

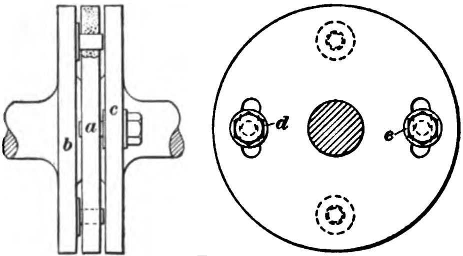

FIG. 32

Leather and rubber are used in various ways in order to secure the necessary requirements. A common form uses a leather disk as part of the drive, and thus obtains the desired flexibility. In some couplings, as, for instance, in that used in the Stevens-Duryea car and shown in Fig. 32, a leather disk *a* is placed between the two shaft flanges *b* and *c*, and each flange is connected to the leather at two points, as shown. The power is transmitted through the leather disk itself, which therefore gives a slight flexibility and takes care of any change of alinement that may occur in the shafts. The magneto timing in this particular case may be adjusted without taking the coupling apart by loosening the nuts *d* and *e* and turning the flange *c*, in which slots instead of holes are provided.

In the magneto coupling of the Velie car, a rubber disk is carried between the shaft flanges, giving the coupling the necessary silence and play. The drive is direct from one metal disk to the other, the rubber disk taking no part in transmitting the power. In some cases, a leather disk or washer is used in the same way.

58. Another form of magneto-shaft coupling is that employing internal and external gears, such as is used on some Lozier cars. This coupling is shown in Fig. 33. The teeth of the internal gear *a* mesh with those of the gear *b* and the power is transmitted by them. The internal gear *a* is attached to the drive shaft and the gear *b* is secured to the magneto shaft. Timing adjustment of the magneto is made by slipping the gear *b* out and turning it until the meshing is changed a tooth or more, as required. The magneto coupling of the Willys-Knight car is of the form shown in Fig. 33, but differs from that of the Lozier in that the inner gear-wheel is made of leather.

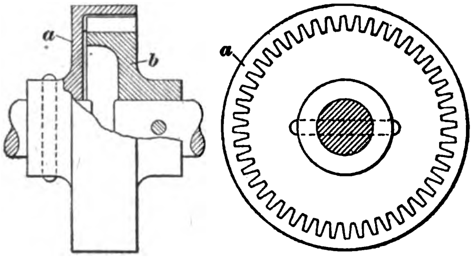

Fig. 33

In some couplings, a collar carrying two or more arms is keyed to the magneto shaft. The arms of the collar engage with slots in a fiber disk that is keyed to the driving shaft.

59. The Bosch magneto coupling, shown in Fig. 34, makes use of a laminated steel spring for securing the desired flexibility. The driving member of this coupling consists of a body *a*, view (*a*), that carries a flat laminated steel spring *b* made up of a large number of fine spring-steel plates, or leaves. The driven member, which is presented in detail in view (*b*), is a cone-shaped hub *c* that is bolted to a ring *d* having two fiber-lined slots *e* diametrically opposite each other. When assembled, as in view (*a*), the part *c* is attached to the armature shaft of the magneto and the flange *a* is secured to the driving shaft, the ends of the spring carried by *a* being engaged in the slots *e* in the driven member. The drive is through the laminated spring, which gives it the required flexibility. Adjustment for timing the magneto is had by means of three taper-headed bolts *f* that are held in place in the part *d* by means of a circular groove, into which the heads fit. The ring *d* can be turned relative to the part *c* and hence to the magneto armature, by loosening the nuts on the three bolts. The bolts may be removed through a slot *g* in the ring *d*.

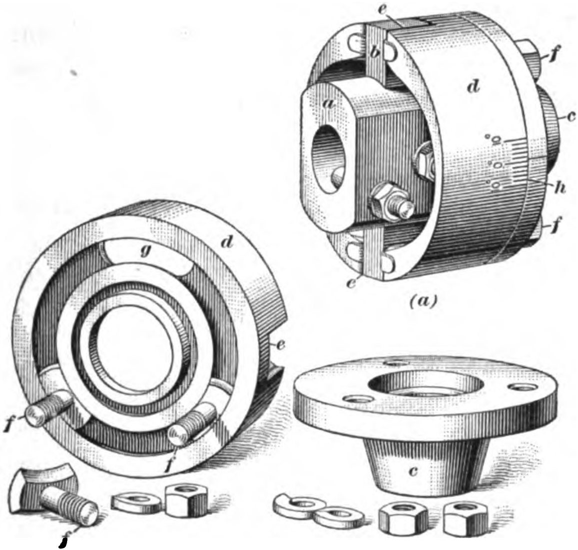

(a)

(b)

FIG. 34

A distinctive feature of the Bosch coupling is the graduated scale shown at *h*, by means of which the setting of the magneto armature may be accurately regulated.

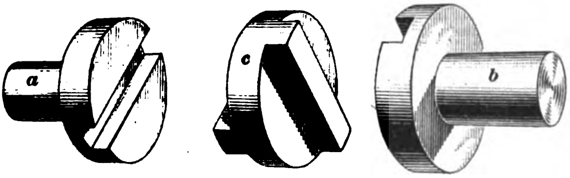

FIG. 35

60. The coupling illustrated in Fig. 35 is known as the *Oldham coupling* and was formerly very popular as a magneto connection. It is still used to a large extent, but is liable to develop a knock if not closely engaged. It consists of three members, shown separated in order to make the construction clear. Both the driving member *a* and the driven member *b* have a groove cut across the face of the flange, and the connecting member *c* has a rectangular projection on each face, the two projections being at right angles to each other. The projections fit loosely into the grooves of the driving and driven members. The Oldham coupling can be employed only where difference of alinement is very small.

DIFFERENTIAL GEARS

61. Differential gears are composed of a set of four or more gears attached to the ends of two shafts that come together and are usually in a straight line, so that both will rotate in the same direction; but if either meets with extra resistance, it may rotate more slowly than the other or may stop altogether. In automobiles, these gears are used for transmitting power to the two halves of the rear-axle shaft in the case of shaft-driven cars, or to the countershaft in the case of double-chain-driven cars. Differential gears are of two general types, depending on the kind of gears used in their construction, namely, the *bevel-gear differential* and the *spur-gear differential*.

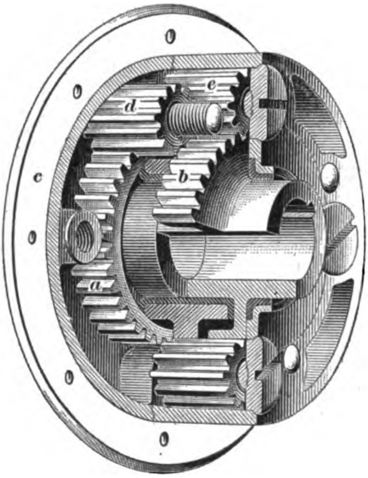

FIG. 36

62. In Fig. 36 is shown a spur-gear differential, the ends of the two shafts of which carry the gears *a* and *b*. The flange *c* is a part of the case to which the bevel driving gear for transmitting power to the differential is fastened. The case carries a series of small gears *d* and *e*, arranged in four pair, each gear being mounted on its own axle. The two gears of each pair mesh together, and one is in mesh with the gear *a* while the other meshes with the gear *b*. By this arrangement, both gears *a* and *b* are drawn in one direction, and yet they may turn with respect to each other when the resistance to the turning of one is greater than that of the other. When the resistance to the movement of gears *a* and *b* is the same, the four pair of small gears *d* and *e* do not turn on their axles but simply carry the gears *a* and *b* around together.

63. In most cases the differential of an automobile is driven from the propeller shaft by means of a bevel gear and pinion. The worm-gear drive is also used successfully. A third type of gearing, which embodies a combination of the other two, is shown in Fig. 37. This type is known as the *worm-bevel drive* and the example shown is that used on some models of the Packard car. When assembled in the car, the pinion *a* is keyed to the drive shaft of the speed-change gears, which in this car are located at the rear axle, and the large gear *b* is bolted to the differentialncase. The gear-teeth are cut at an angle so that one set of teeth is constantly meshing while the next set is becoming disengaged, thus affording a continuous contact in the same respect that it is accomplished with the worm-drive, although not to the same extent. The chief advantage claimed for the so-called worm-bevel drive is its quietness, which is due to the fact that there is practically no backlash, or looseness, between the teeth with this design. One set of teeth is constantly meshing while the next is becoming disengaged, thus affording a continuous contact similar to that accomplished by the worm and worm-gear drive.

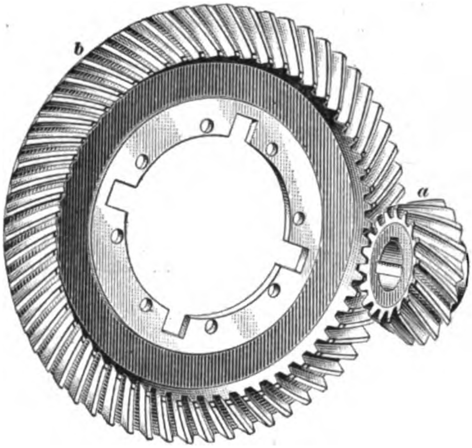

Fig. 37

CONTROL MECHANISMS

STEERING MECHANISMS

ARRANGEMENT OF STEERING CONNECTIONS

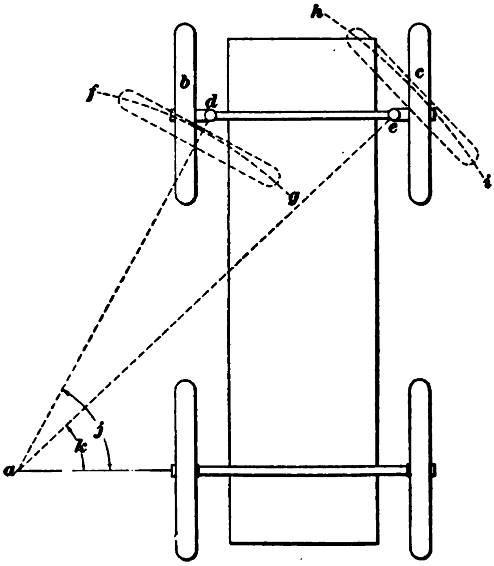

FIG. 38

64. When a car is traveling straight ahead, the wheels stand in the position shown by the full lines in Fig. 38, which is a diagrammatic outline of a top view of the frame, axles, and wheels of an automobile. The axles of the wheels appear to be parallel to each other when looked at from above, as in this view. If the car is to turn a curve whose center is at *a*, the front wheels *b* and *c* must be swiveled about the more or less vertical pivots *d* and *e* of their respective knuckle joints. When turning toward the left, as indicated in the figure, the left-hand front wheel *b* must swivel through a greater angle than the right-hand front wheel, which is at the outer side of the curve along which the car is traveling. The path that the left-hand wheel follows is indicated by the arc *f g* whose center is at *a*, and the path of the right-hand wheel is along the arc *h i*, whose center is also at *a*. In order that the front wheels may have a true rolling motion on the ground, it is necessary for them to swivel to such an extent that their axes, if extended, will intersect on an extension of the rear axle, as shown. The lines *a d* and *a e* represent extensions of the axes of the front wheels. The angle through which the left-hand wheel must be swiveled is shown at *j*, and that through which the right-hand wheel must be swiveled, at *k*. It can be readily seen that the arc *j* for the left-hand, or inside, wheel is larger than the arc *k* for the outside wheel *c*.

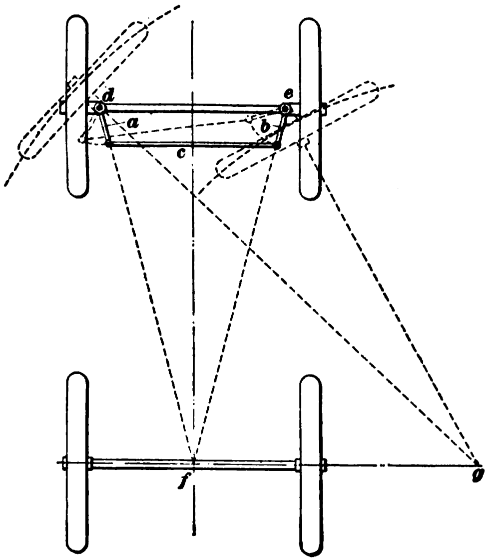

FIG. 39

65. One of the two methods of connecting wheels together to fulfil the conditions just mentioned is shown in Fig. 39. The full lines indicate the position of the steering mechanism for the car to go straight ahead. The arms *a* and *b* of the steering knuckles are connected by the distance rod *c*. These arms *a* and *b* stand in such a position when the car is going straight ahead that if a line is drawn through the center of the swivel pin *d* of one of the knuckle joints and also through the center of the pin connecting that arm to the distance rod, and another line is similarly drawn through the swivel pin *e* and the pin connecting the corresponding arm to the distance rod, these two lines will intersect each other on or near the center line of the axis common to the rear wheels, as indicated at *f*. The length of the distance-rod arms *a* and *b* on the steering knuckles is made such that when the wheels are swung around to turn a curve, the wheels will take positions in which their axes, if extended, would intersect on or near an extension of the center line of the rear axle. The intersection for this position is shown at *g*.

If the steering mechanism were mathematically correct in its operation, then, for any position of the swiveled road wheels, the intersection of the extended axes of the front wheels would lie exactly on the extension of the rear axle. The mechanism shown, however, does not exactly give this result, but one that is near enough for all practical purposes.

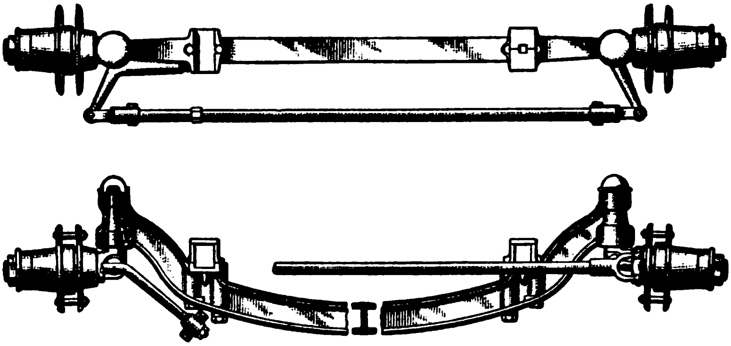

FIG. 40

66. The second method of connecting the front wheels together is by placing the distance rod in front of the front axle with the arms of the knuckles extending forwards to engage with it, as shown in Fig. 40. In this illustration, it is assumed that the axle is viewed from the front. In this case, the distance between the ends of the steering-knuckle arms is greater than the distance between the steering-knuckle pins. The same condition exists as to the lines through the steering-knuckle pivots and connections of the distance rod intersecting at or near the center of the rear axle.

STEERING GEARS

67. Classification.—*Steering gears* may be broadly divided into *tiller steering gears* and *wheel steering gears*. In a **tiller steering gear,** steering is effected by moving by hand a long lever, which in turn is connected by suitable means to one of the steering knuckles; this form of steering gear is now practically obsolete, being used only on some light electric vehicles. In a **wheel steering gear,** as implied by the name, steering is effected by turning a wheel, ranging in modern cars between 16 and 20 inches in diameter.

Steering gears may also be classified as *reversible* and *irreversible steering gears*. When an obstruction striking one of the road wheels will cause the hand steering wheel to rotate and thus deflect the car from its direction of travel, unless the steering wheel is very firmly gripped by the hands of the driver, the steering gear is called a **reversible steering gear.** It is evident that the reason for the name is that it is possible to rotate the hand wheel by force applied to one or both of the road wheels. A steering gear that cannot readily be reversed in this manner is called an **irreversible steering gear.** While none of the steering gears in actual use fully possess this property of irreversibility when in good working order, they are usually referred to as being irreversible when but little effort at the hand wheel is required to keep the car from being deflected from its path when the road wheels strike an obstruction.

68. Various methods are employed for connecting the lower end of the inclined shaft that carries the steering wheel to the reach rod, in order to transmit the required motion to the steering knuckles. In every case, a turn of the wheel rotates a short arm that in turn rotates the steering knuckles through the reach rod. The steering mechanism at the bottom of the inclined shaft usually consists of a worm and complete worm-wheel or a worm and sector, although some form of screw-and-nut or pinion-and-gear connection is also sometimes used. In one car, the lower end of the shaft is connected directly to the reach rod by a short crank-arm while a planetary gear-set is provided at the top for transmitting the movement from the wheel to the shaft.

69. Worm-and-Worm-Wheel Steering Gear.—The most popular type of steering gear is that employing a worm and worm-wheel. The Gemmer steering gear, which is an example of this type, is shown in Fig. 41. Part of the steering wheel and column is cut away, exposing to view the interior arrangement. Within the stationary housing *a* is the steering shaft, or mast, *b*, carrying at its upper end the steering wheel *c* and at its lower end the worm *d*. The worm is supported at its top and bottom by two ball thrust bearings *e*, the mast being also provided near the top with a spring bushing *f*, in order to prevent rattling.

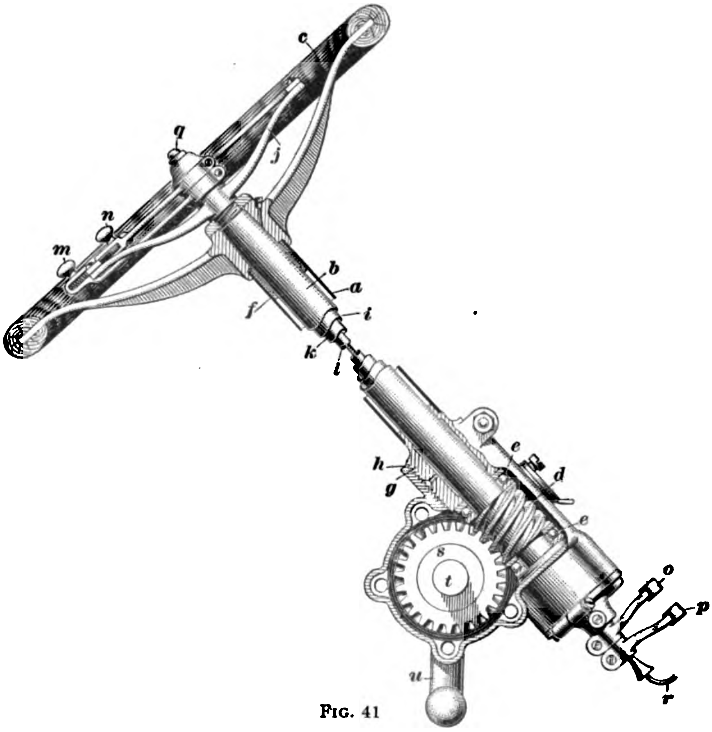

FIG. 41

The thrust bearings can be adjusted by means of the adjusting nut *g* that screws into the housing *h*. A second stationary tube *i* is located inside of the mast *b*; its function is to carry the quadrant *j* at the top of the mast, or shaft. This tube contains two other tubes, *k* and *l*, by means of which motion is transmitted from the throttle and spark levers, *m* and *n*, to the arms *o* and *p*, respectively. In this particular case an electric-horn push button *q* is located in the center of the steering wheel and is wired to the horn through the inner tube *l* by means of the wire *r*.

When the steering wheel is rotated, the mast *b* transmits the motion to the worm *d* and this, being in mesh with the worm-wheel *s* causes that wheel to turn. The shaft *t*, which carries the short arm *u*, is integral with the worm-wheel *s* and, hence, rotates with any motion of the steering wheel and in turn causes the steering knuckles to be rotated by the reach rod, which, however is not shown in the illustration. The steering mechanism is so constructed that a turn of the steering wheel right-handed swings the front wheels to the right and steers the car in that direction. A turn of the steering wheel to the left steers the car to the left.

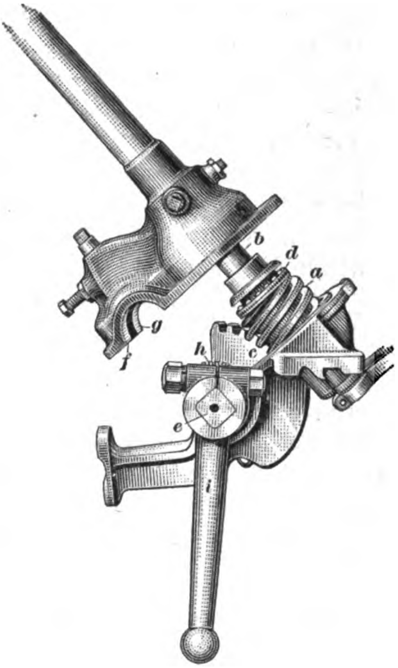

FIG. 42

Adjustment of the steering gear for wear is made by changing the position of the crank-arm *u* in relation to the worm-wheel *s*; when the worm-wheel has worn appreciably in one place, an unworn portion can be brought into mesh with the worm by turning the arm through 90° on the squared end of the worm-wheel shaft. This steering gear is of the irreversible type.

70. Worm-and-Sector Steering Gear.—In the worm-and-sector steering gear, a worm on the lower end of the steering shaft, or mast, meshes with a sector of a worm-wheel instead of with a complete wheel. An example of this type is that used on the Cadillac automobile, which is shown in Fig. 42 with the two parts of the housing separated. The worm *a* is carried on the lower end of the steering shaft *b*, as in the worm-and-wheel type, but in this case it meshes with a sector *c*. The worm is fitted with two thrust bearings, one of which is shown at *d*, that are made adjustable in the direction of the steering shaft *b*. The sector shaft *e* is carried on two bearings, the caps of which are shown at *f* and *g*, and is made adjustable by means of two eccentric bearing bushings that can be turned to any position, thus moving the sector closer to or further from the worm, as desired. The eccentric bushings can be locked in any position by means of teeth *h* cut in their periphery and a locking pin that screws into the casing and meshes with the teeth. The eccentric bushing is a common form of adjustment in this type of steering mechanism. The arm *i* is the crank-arm by means of which the reach rod is shifted; it is clamped to the squared end of the shaft *e*, as shown. This is also a form of irreversible steering gear.

71. A feature of one model of the Cadillac worm-and-sector steering gear is that the steering wheel is hinged in front so that it can be dropped downwards, thus facilitating entrance and exit on the driver's side of the car. However, practically all other steering gears are provided with a steering wheel that is fixed permanently to the steering shaft and cannot be dropped.

72. Screw-and-Nut Type Steering Gear.—An irreversible steering gear of the screw-and-nut type, as used on the Pierce-Arrow automobile, is shown in Fig. 43. View (*a*) is a vertical section of the steering column and wheel and view (*b*) is a sectional view through the plane *x y*. In this device, a multiple threaded screw *a*, confined endwise by ball thrust bearings *b* and *c*, is attached to the lower end of the steering shaft *d* and actuates a nut *e*. The nut is provided with projections, or trunnions, carrying blocks *f* that rest in slots of a forked lever *g*. The lever *g* is keyed and pinned to a spindle *h* that carries the reach-rod crank-arm *i*. Rotation of the steering wheel *j* causes the nut *e* to travel up or down, thus swinging the lever *g* and actuating the crank-arm and reach rod through the spindle *h*.

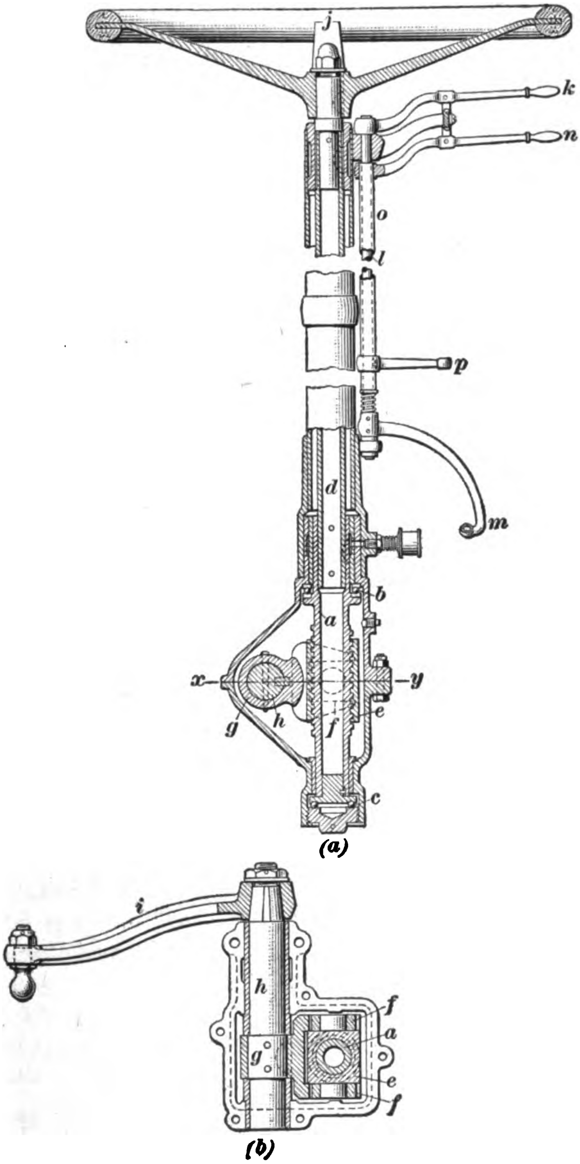

FIG. 43

The steering gear shown is an example of one with the shafts for operating the throttle and spark advance located outside of the steering column. The lever *k* operates the throttle by means of the shaft *l* and arm *m*, and the lever *n* is connected to the spark advance mechanism through the tube *o* and the arm *p*. These levers and connections are carried on the outside of the steering column by suitable brackets.

73. Fig. 44 shows the mechanism of the Jacox screw-and-nut type steering gear, which makes use of a right-and-left threaded screw and two half nuts instead of a single nut. The screw *a*, which is attached to the lower end of the shaft that carries the steering wheel, has two threads cut over each other—one right-handed and one left-handed. The half nuts *b* and *c* surround the screw, one meshing with the right-hand thread and the other with the left-hand thread so that one slides up and the other slides down within the gear housing *d* when the screw is rotated. To the lower end of each of these half nuts is pinned a hardened-steel block *e* that bears on a roller *f* at each end of a rocker *g*. The rocker is mounted on a horizontal shaft *h* that also carries the reach-rod crank-arm.

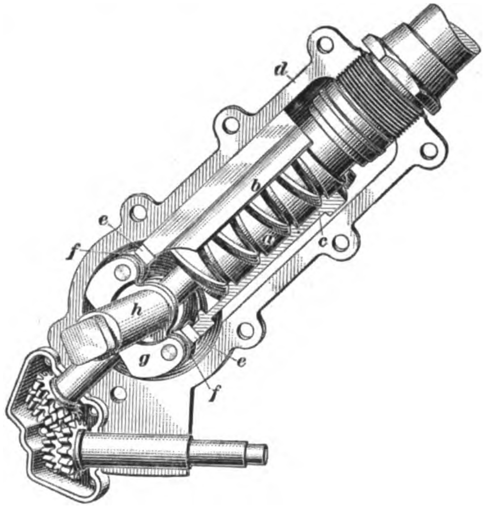

FIG. 44

When the steering wheel is rotated so as to cause the half nut *b* to travel upwards and the half nut *c* downwards, the bearing block *e* under *c* presses downwards against its roller and turns the rocker *g*. Motion is thereby imparted to the shaft *h* and to the reach rod, by means of which the front wheels are swung in the direction desired.

The bevel pinions at the lower end of the steering mechanism connect the shafts belonging to the mechanism for operating the throttle and spark advance.

74. Bevel-Pinion-and-Sector Steering Gear.—The Reo steering gear, shown in Fig. 45, is an example of the bevel-pinion-and-sector type and belongs to the reversible class. Because of the nature of its construction, this mechanism transmits a shock from the front road wheels to the steering wheel much more readily than the gears previously described. On cars equipped with reversible steering gears it is good practice to have the steering knuckle pins set so that practically no motion can be transmitted from the road wheels to the steering mechanism. This may be accomplished by inclining either the knuckle pivot pin or the wheel spindle, or both, so as to bring the pivot pin in line, or nearly in line, with the point where the wheel touches the ground.

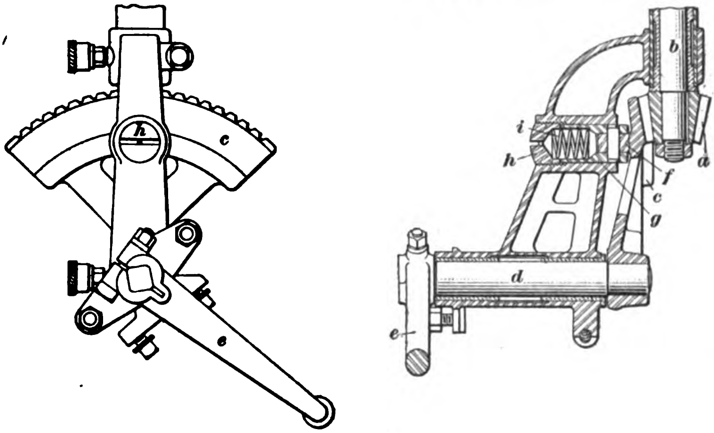

FIG. 45

75. Referring to Fig. 45, a bevel pinion *a* is keyed to the steering shaft *b* and meshes with a sector *c* of a bevel gear. The sector is mounted on a short shaft *d* that also carries the reach-rod arm *e*. A movement of the steering wheel rotates the pinion and this in turn rotates the sector and transmits the motion to the crank-arm, which is connected to the steering knuckle pins in the usual manner. The thrust of the bevel-gear sector is taken by a roller *f* that is carried by a plunger *g*. Adjustment of the sector is had by means of a screw *h* that is used for adjusting the position of the plunger *g*. A spring *i* is located within the screw and plunger, which are made hollow. This spring always keeps the roller in contact with the sector.

76. Planetary Type of Steering Gear.—In the planetary type of steering gear, which is used on the model T Ford car, the gearing is located at the top of the steering column. The inclined steering shaft is connected directly to the reach rod by a crank-arm that is keyed to its lower end. However, the steering wheel is not fitted to the upper end of this shaft as in the gears previously described, but is connected to it through a small planetary gear-set. The arrangement of the gears of this set is shown diagrammatically in Fig. 46. The internal gear *a* is stationary, being brazed to the outside tube of the steering column. Meshing with this gear are the three planetary gears *b* that are mounted on pins carried by the head of the steering shaft. The small spur gear *c* is integral with a short shaft that has a bearing in the steering shaft and that carries the steering wheel. This gear meshes with the three planetary gears *b*.

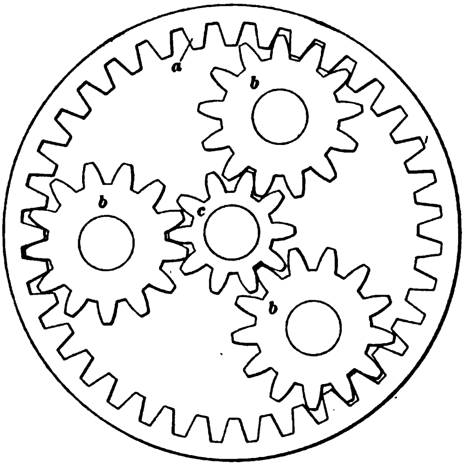

Fig. 46

When the center gear *c* is turned by the steering wheel, motion is imported to the planetary gears *b* and they are rolled around the stationary gear *a* in the same direction in which the center gear is turned. The planetary gears *b* are thus carried bodily around and as their pins, or studs, are attached to the upper end of the steering shaft, they turn that shaft with them. A movement, therefore, of the steering wheel, turns the inclined shaft and swings the reach-rod arm, imparting motion to the steering knuckles in the usual manner.

The planetary steering gear is of the reversible type, as motion can be imparted to the steering wheel by moving the front wheels.

BRAKE MECHANISM

CONTRACTING AND EXPANDING BRAKES

77. The brakes used in automobile practice consist of a cylindrical member, or *brake drum*, attached to some rotating part, and a contracting or expanding member, or *brake band*, supported by some fixed part of the car. The brake band is applied by levers operated from a pedal or hand-brake lever. If the band is of the contracting type and is applied to the outside of the drum, the brakes are called **contracting brakes**; if it is an expanding band and is applied to the inside of the drum, they are called **expanding brakes.** It is the usual practice to fit two entirely separate sets of brakes to automobiles. The one brake system is used in ordinary service, and is therefore called the **service brake.** The second brake system is intended for emergency use, and hence the term **emergency brake** is applied to it.

It was formerly the common practice to place the service brake on some rotating part of the speed-changing mechanism, or on a drum placed directly on the propeller shaft, and to apply the emergency brakes to a drum fastened to each rear wheel. The present tendency is to apply both sets of brakes to drums bolted to the rear-wheel hubs, making the one set contracting and the other expanding. Either the service brake may be of the contracting type and the emergency brake of the expanding type, or the opposite may be true. There is no fixed rule governing the type of either set of brakes. In a few cars, however, both sets of brakes are of the expanding type and are located side by side within a single brake drum.

78. The most common form of hub brake consists of a contracting brake, operated by means of a bell-crank, and an expanding brake, operated by means of a cam. An example of this form is found in some designs of the Timken-Detroit rear axles, and is shown in Fig. 47. In order to show the details of the operating mechanism the brake drum is omitted from the illustration.

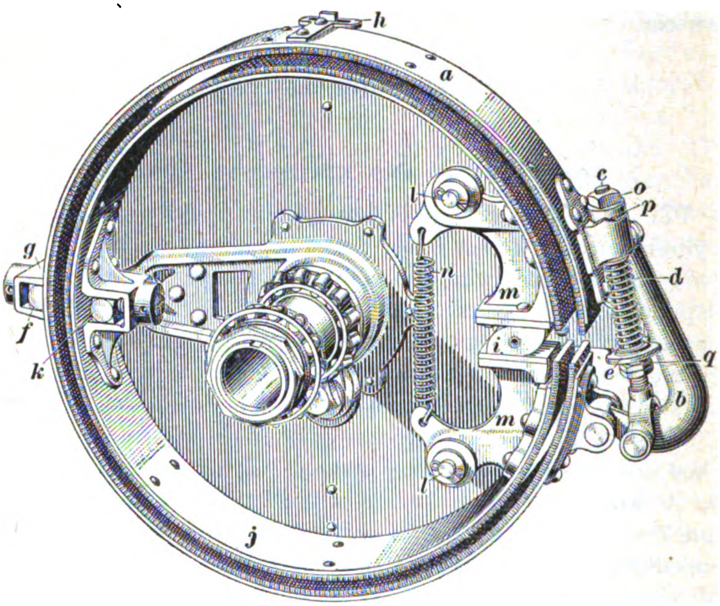

FIG. 47

The contracting band *a* is lined with wire-woven asbestos fabric. It is attached at one end to the short arm of a bell-crank *b*, and at the other end it connects through a short link *c* to the fulcrum of the bell-crank. The long arm of the bell-crank may be connected by rods and levers to either a pedal or a hand lever, and the brake is then applied by exerting a pull in the proper direction on this arm. When the brake pedal or lever is released, the elasticity of the steel band *a* draws it away from the drum. In addition to this, a releasing spring *d* is provided. This spring seats on a stop *e* that is stationary, so that when the brake is applied, the spring is compressed. When the brake is released, the spring expands and helps to expand the band *a*. On the side of the brake opposite the operating mechanism, there is a support *f* that helps to carry the band by means of a bracket *g*. Between the support and the outer part of the bracket, there are two springs that tend to keep the brakes from rubbing on the drums when not in use. The action of these springs can be limited by means of an adjusting screw. Two supports *h*, one located on top and the other on the bottom of the band *a*, preserve the brakes in their correct alinement.

79. In the cam-operated expanding brake shown in Fig. 47, the double cam *i* acts on bearing surfaces carried on the ends of the asbestos-lined band *j*. The band *j* is supported at *k* in the same manner that the band *a* is supported at *f*. Two stops *l*, which are pins secured to the axle housing and passing through slotted holes in the brackets *m*, hold the expanding band in sidewise alinement. The spring *n* is the releasing spring and holds the ends of the band in contact with the cam *i*. The supports *f* and *k* are carried on an extension of the axle housing.

80. Adjustment of the contracting brake is made by means of the nut *o*, Fig. 47, on the end of the link *c*. This nut is provided with a notch *p* that fits over a corresponding projection on the supporting bracket; hence, the least adjustment that can be made is one-half of a turn of the nut. The adjusting nuts at *q* are used for centering the band on the brake drum, the nut *o* taking care of the actual adjustment.

The expanding brake is adjusted by lengthening or shortening the brake rod by means of a suitable turnbuckle.

81. The Stevens-Duryea brake, shown in Fig. 48, is an example of a **hinged contracting brake** and a **toggle expanding brake.** The contracting brake band *a*, which is shown in detail in view (*b*), is in two parts hinged at *b*. This brake is applied in much the same fashion as that shown in Fig. 47, that is, by means of a bell-crank *c*. The releasing spring is shown at *d*. An adjustment *e* is provided for adjusting the clearance of the brake shoes *a* from the drum, which is not shown in this illustration.

The expanding band *f*, which is shown separately in view (*c*), is operated by a togglejoint consisting of three members *g*, *h*, and *i*. A force applied to the member *g* tends to bring the members *h* and *i* in line and thus to expand the band *f* and force it against the drum. The toggle is operated through the crank *j*, which is carried on the extension *k*, view (*a*), of the axle tube. Two releasing springs *l* are also anchored on the flange *k*. The position of the band *f* is adjusted by the nuts *m* and *n*.

The contracting band *a* is supported at *b* and the expanding band at *o*, both being carried by the flange *k*. In this brake, the expanding member is not faced, affording an example of a metal-to-metal brake.

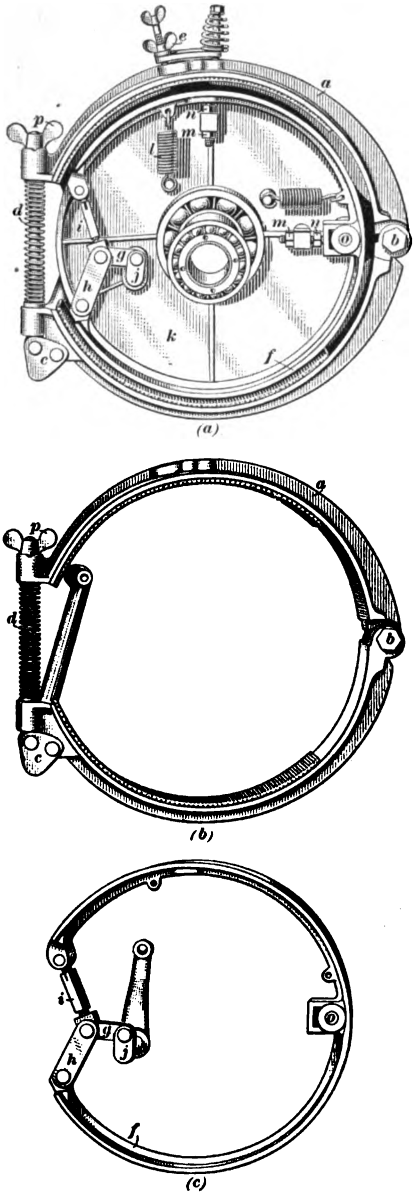

Fig. 48

The contracting brake is adjusted for tightness by the winged nut *p*, and the expanding brake is adjusted by turning the small turnbuckle *i* of the togglejoint.

82. Some hub brakes, both of the contracting and of the expanding types, are operated by means of short double-armed levers. The Premier brake, in which both of the bands are operated in this manner, is shown in Fig. 49.

Each end of the external-brake band *a* is attached by pins *b* and *c* to a short lever keyed at its center to the brake shaft *c*. This shaft is free to turn in a stationary bearing *e* that forms part of the rear-axle housing. It will be seen that if the shaft *d* is turned, as, by pushing the emergency-brake lever forwards, so that the pin *c* will move upwards and the pin *b* downwards, the brake band will be shortened and contracted on the drum. The brake band *a* is confined sidewise by hooks *f*, and its clearance from the drum is adjusted by the screw *g*.

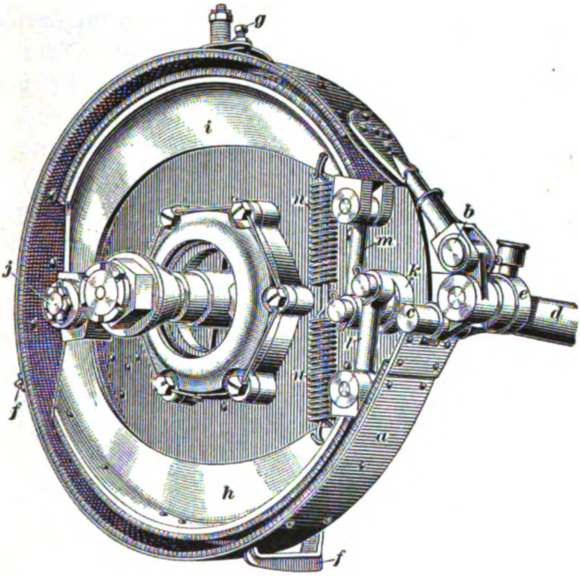

FIG. 49

The internal brake consists of two shoes *h* and *i* pivoted at *j* to the rear-axle housing. These shoes can be pressed outwards against the inside of the brake drum by pulling forwards on a lever arm attached to the short shaft carrying the lever *k*, from the ends of which extend the links *l* and *m* to the free ends of the brake shoes. The helical springs *n* help to release the internal shoes from the drum and to hold them in position.

Both of the brakes here shown are lined with asbestos fabric. They are truly *double acting*, by which is meant that they work equally as well when backing the car as when going ahead. This is not true of brakes where the force exerted by the operating mechanism is greater on one end of the band than on the other, as, for instance, where one end of the band is anchored to the axle housing.

Adjustment of the Premier brakes is made by turning the brake rods under the floor-boards of the car. These rods are equipped with right-and-left-hand threads and locknuts.

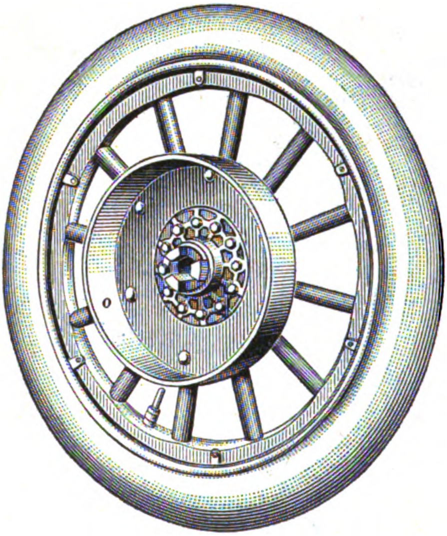

FIG. 50

83. In Fig. 50 is shown the Premier rear wheel and brake drum removed from the axle. When assembled, the drum *o* is interposed between the linings of the band *a* and the shoes *h* and *i*, Fig. 49. This is the form of drum used on all hub brakes; one surface of the drum makes contact with each brake.

84. A form of bell-crank operating mechanism that makes possible a double-acting brake is shown in Fig. 51. The characteristic feature of this brake is the use of the slotted links *a* connecting one end of the brake band *b* with the link *c*. The mechanism is supported by a stationary bearing *d* that is part of the axle housing. The link *c* is free to pass through the pin *e* so that a pull on the rod *f* draws the band *b* tightly about the drum *g*. The brake is shown in its engaged position with the drum moving in the direction indicated by the arrow, or right-handed. The brake operates just as efficiently with the drum moving in the opposite direction, because either end of the band is free to wrap itself around the drum, or cling to it; hence, the brake is truly double acting.

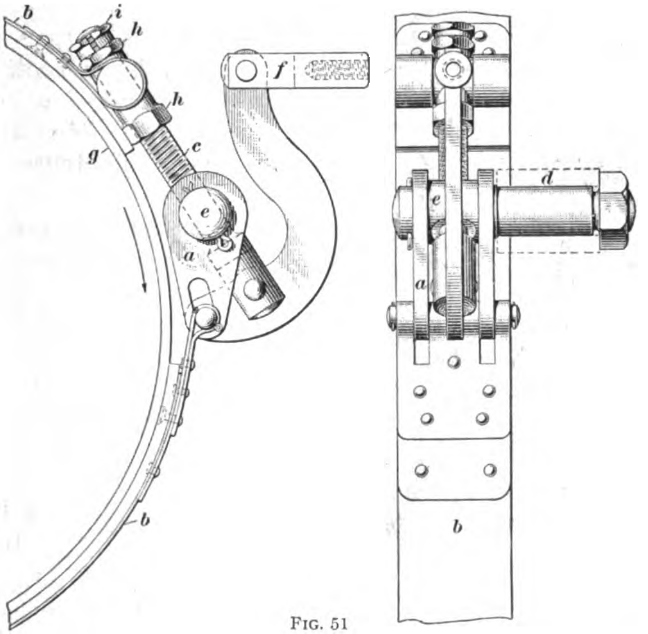

FIG. 51

This brake is adjusted for tightness by means of the adjusting nuts *h* and the locknut *i*. The brake shown is known as the Raymond double-acting brake.

85. An example of a service brake applied to a drum on the main shaft of the transmission is found in the Mercer car, and is shown in Fig. 52. The brake consists of two shoes *a* and *b* that are lined with asbestos fabric and surround a drum *c* on the shaft *d*. The brake is located close up to the transmission casing *e* and the actuating mechanism is supported by that casing. The shaft *f* carries two screws, one right-handed and the other left-handed, that turn inside of the nuts *g*. When the shaft is rotated in the proper direction, the nuts move toward each other and tighten the shoes by means of the lugs ***h*** that impinge on the shoes. The releasing spring ***i*** aids in separating the shoes when the brake is released.

In the Mercer car, this brake is operated by a pedal. The advantage claimed for it is that the same braking force is always applied to both rear wheels. On some transmission contracting brakes, a bell-crank is used as in some hub brakes.

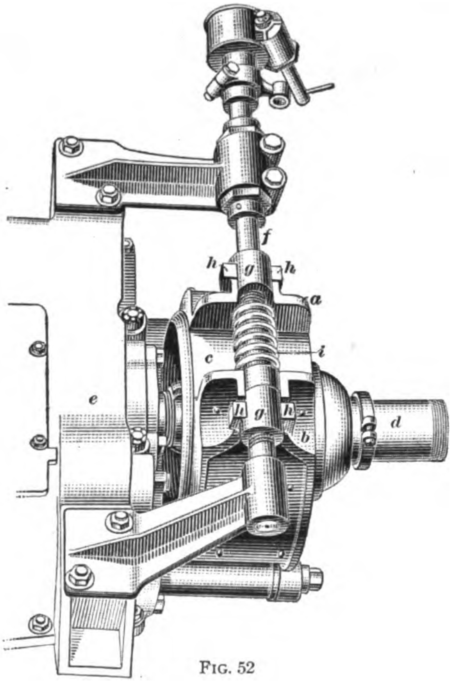

FIG. 52

BRAKE EQUALIZERS

86. Unless some means are provided for keeping the tension equal in the two rods that connect to the shoes of a pair of hub brakes, one of the shoes, when applying the brakes, will bear against its drum harder than the other if the adjustment is not perfectly the same for each brake. Such adjustment is difficult to obtain, and even then it will not generally continue as the brakes wear in service. When one hub brake grips harder than its mate, there is a tendency to slew the car around toward the side whose brake has the weaker grip.

Various forms of **brake equalizers** are used to obtain equal force of application for a pair of hub brakes. Probably the simplest form of equalizer is a bar *a*, Fig. 53, extending across the car, and having a connection at each end to one of the tension rods *b* that runs back to the brake shoes; also, a connection at the middle of the bar to the rod *c* that connects to the brake pedal or hand lever by means of which the driver applies the brakes. The pull on the rods leading from the brake shoes will, of course, be the same in each with this arrangement.

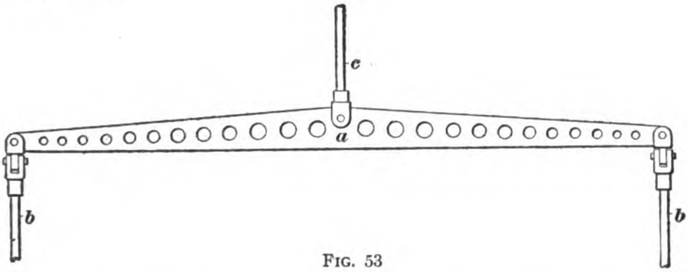

FIG. 53

87. Another device consists of separate crank-shafts, one for each brake shoe, placed in line with each other across the length of the car. The crank-levers at the outer ends of the shafts are connected to the tension rods that run back to the brakes, and the crank-levers at the adjacent inner ends of the divided shaft are connected to a short equalizer bar in the same manner as just described when the bar extends completely across the car.

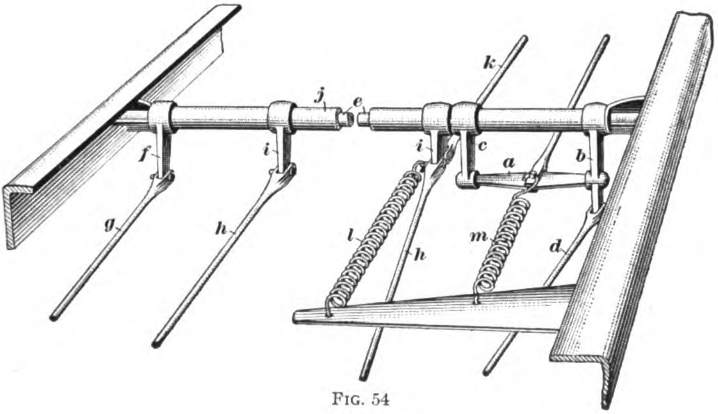

FIG. 54

An arrangement of this kind as used in some Overland cars, is shown in Fig. 54. The middle of the short equalizer bar *a* is joined to the service-brake rod that runs forwards to the operating pedal. The ends of the bar are joined to two separate cranks *b* and *c*, one of which is also connected to one of the service brakes by a rod *d*. The other crank *c* is carried by the shaft *e* that extends across the car and carries at its outer end a second crank *f*, which in turn is connected to the second service brake by a tension rod *g*. Thus, the pressure on the service brakes is equalized by the bar *a*. The emergency brakes are not provided with an equalizer. These are operated through the rods *h* and the cranks *i*, which are mounted on a tube *j*. The tube is rotated by a hand lever through one of the cranks and the rod *k*. The springs *l* and *m* aid in releasing the brakes.

In other equalizers of this type the rod *d* is joined to a separate crank that is connected by a short shaft to the equalizer crank *b*.

88. Even with a brake equalizer of the most effective form, the resistance that a pair of hub brakes offers to the rotation of the wheels is not the same, unless the coefficient of friction between the rubbing surfaces of the brake shoe and drum is the same in each case. Thus, if one brake is dry and the other oily, they will not grip the wheels so as to resist the rotation of each wheel with equal force, even though the pressure of the shoe against the drum is the same for each brake.

BEARINGS AND LUBRICATION
(PART 1)

BEARINGS

PLAIN BEARINGS

DEFINITIONS

1. The oldest and simplest form of bearing that is widely used in automobile practice, not only in the engine, but also in parts of the running gear, is that known as a **plain bearing.** Such a bearing consists essentially of two parts, namely, a member, called the *journal*, having a surface that fits freely a corresponding hole in another member, called the *box*. One of these two members is stationary and the other is free to revolve or to slide in the direction of its axis.

Plain bearings are of two general types: *non-adjustable* and *adjustable*. There are two classes of non-adjustable bearings, namely, those having a *bushed box*, that is, a box fitted with a removable solid bushing or liner, and those having no bushing. In adjustable bearings, the box is divided into two parts; such division is made for convenience in assembling the bearing and taking it apart, and also for making adjustments to take up wear and to secure a proper fit between the journal and the box. A lining is very often used between the journal and the main body of the box. The object of using the lining is to provide a more suitable material for the journal to rub against than that which is used for the supporting parts or frame of the machine, or to provide a ready means of replacing a worn part. This lining is made in two parts to suit the two parts of the box; when the lining is made separate from the box and is readily removable, its two parts are spoken of as the *bearing brasses*. This term, however, does not necessarily mean that the lining is made of brass.

Although, in most bearings used in automobile work, the journal rotates in the box, as, for instance, in the crank-shaft and cam-shaft bearings of the engine, there are others in which the moving member slides back and forth in the box, as, for instance, the valve stems and valve lifters of the engine and the sliding gears of the transmission.

NON-ADJUSTABLE PLAIN BEARINGS

2. The class of non-adjustable plain bearings in which no bushings are used is confined in automobile work chiefly to joints on the brake connections, the transmission rods, the tie-rod joining the steering knuckles, and in similar places where there is very little movement and hence little wear.

The form that these bearings usually take in automobile work in the places referred to is known as the *yoke-and-eye rod*, of which the yoke is made either *adjustable* or *plain*. The proportions of yoke-and-eye-rod bearings have been standardized by the Society of Automobile Engineers, and their recommendation is now largely followed by manufacturers.

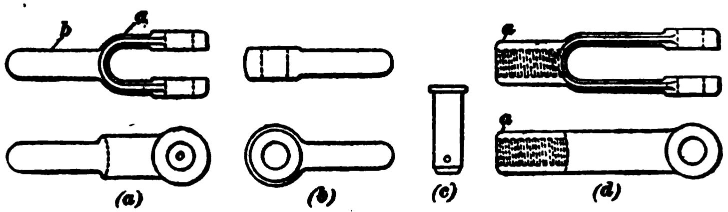

FIG. 1

3. Fig. 1 (*a*) shows a **plain yoke end** consisting of a fork *a* and a circular stem *b*. A hole *c* is drilled through each jaw of the fork. The stem *b* is welded to the rod to which the yoke end is to be applied, the yoke end being made from drop-forged steel. The eye-rod end is shown in (*b*); it fits between the jaws of the yoke end and has drilled through it a hole of the same size as that in the fork jaws. The yoke end and eye-rod end are connected by passing through them a pin like that shown in (*c*); this pin has an enlarged head at one end and drilled through it at the other end is a hole through which is passed a cotter pin when the yoke-and-eye-rod ends are assembled.

An **adjustable yoke end** is shown in Fig. 1 (*d*). The cylindrical stem *a* of this yoke end is larger than that of the plain yoke end, and it has a central hole drilled through it and tapped out. The yoke end is attached to its rod by screwing it on, and the length of the rod may be adjusted to a slight extent by screwing the yoke end to the right or to the left.

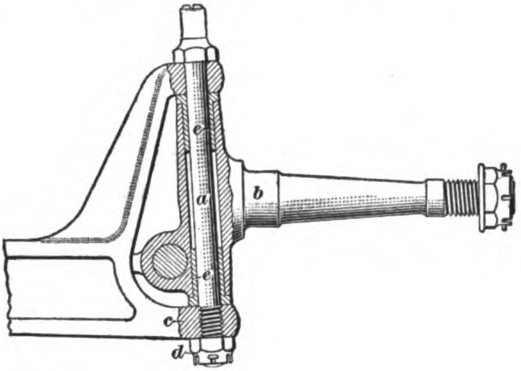

FIG. 2

In yoke ends and eye-rod ends, the holes may be considered to be the boxes, and the pin to be the journal, of the bearing; motion can occur only in a plane at right angles to the joint pin.

4. A **non-adjustable bushed bearing** is shown in Fig. 2, which illustrates one front-axle end and steering knuckle of the Ford car, model T. The spindle bolt *a* upon which the steering knuckle *b* turns is stationary in the axle end, being screwed into the lower jaw *c* and locked by a locknut *d* and a

cotter pin. The steering knuckle is fitted with two removable bushings *e*, which are pressed into it, and on the inside of these bushings is a close working fit on the spindle bolt. This bolt in this case forms the journal of a bearing and is stationary; the steering knuckle, with its two bushings, forms the box of the bearing and is movable.

The object in bushing a plain non-adjustable bearing is to permit an easy restoration of a proper working fit between the journal and the box by substituting new bushings and perhaps a new journal for the old and worn-out bushings and journal.

5. Bushed plain non-adjustable bearings have been used on rear axles for the driving pinion shaft and also for the driving shafts; they have also been used for the end bearings of crank-shafts, although their use for this purpose is now uncommon. The cam-shafts and pump and magneto shafts of engines very frequently run in bushed boxes.

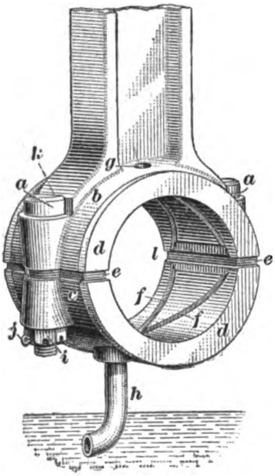

FIG. 3

ADJUSTABLE PLAIN BEARINGS

6. A typical **adjustable plain bearing** is shown in Fig. 3, which illustrates the crankpin end of the connecting-rod used in some Northway motors. The connecting-rod is made of drop-forged steel; its large end is bored out cylindrical, the holes for the bolts *a* are drilled, and the forging is then sawed apart. The box is thus formed by the connecting-rod *b* and the cap *c*, and is lined with removable bearing-metal brasses *d* that have a flange at each end to confine them sidewise. Thin strips of sheet metal, called *shims*, are placed between the connecting-rod part of the box and the cap, as shown at *e*. In order that oil may be properly distributed all over the bearing, oil grooves *f* are cut into the brasses, as shown. These oil grooves communicate, in the upper brass, with the oil hole *g*, through which oil splashed up by the connecting-rod when in motion enters this brass; the oil grooves in the cap communicate with the oil scoop *h*, which in this particular case is a piece of copper tubing. The oil scoop, as the crank nears the bottom dead center, dips into oil contained in a trough beneath the crank and not only scoops up oil that passes upwards to the oil grooves of the lower brass *d*, but also splashes the oil all over the inside of the crank-case, thereby lubricating the pistons, wristpins, cam-shaft, and main bearings.

In automobile-engine work, it is now the common practice to lock positively all nuts on bolts that hold the two parts of bearings together. In this instance, locking is done by slotting the nuts *i* and passing a cotter pin *j* through the bolt and a pair of opposite slots in the nut; the slotted nuts are spoken of as *castellated nuts*. To prevent the bolts from turning while screwing the nuts on or off, the head of each bolt, in this case, is flattened on one side, and made to bear against a flat surface formed on the connecting-rod, as shown at *k*.

The two brasses of adjustable plain bearings are usually *relieved* where they butt against the shims; that is, part of the bearing surface is cut away, for instance as shown at *l*. Thus there is formed a pocket that greatly assists in distributing the oil evenly all over the brasses and journal; furthermore, as experience has shown, a bearing having brasses thus relieved is less liable to be damaged by heating due to friction than one whose brasses are not relieved.

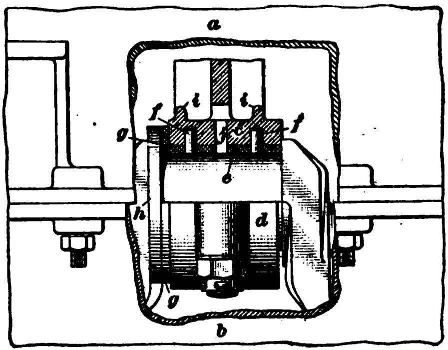

FIG. 4

7. In Fig. 4 is shown, partly in section, a common construction of a plain adjustable main bearing for an automobile-engine crank-shaft. In order to show the bearing, part of the walls of the upper crank-case *a* and the lower crank-case *b* are broken away. The upper half *c* of the box, following the most usual construction, is cast in one with the upper crank-case; the lower half of the box, or the cap *d*, is separate and is bolted on by a bolt at each side fitted with a castellated nut that is secured by a cotter pin. Each half of the box is fitted with a removable brass, or liner, the upper one being shown in section at *e*; in this particular case, each liner is prevented from shifting by dowel-pins *f*.

The particular bearing here shown is the forward one of the two middle bearings of the four-bearing crank-shaft of a six-cylinder engine. It will be noticed that one side of each liner has formed on it a flange *g* that bears against a flange *h* of the crank-shaft. The second middle bearing has a similar flange on its liners, but on the side opposite where the flange is located on the bearing shown, and bearing against it is a crank-shaft flange similar to *h*. The crank-shaft is thus confined longitudinally. In practice, the distance between the flanges of the brasses is made a little larger than the distance between the flanges of the crank-shaft, thus permitting a little end motion of the crank-shaft to and fro, which motion greatly assists the oil distribution over the bearing and also tends to prevent it from wearing in ridges.

A great many manufacturers of automobile engines make their main bearing brasses with a flange on each side of the bearing, and omit dowel-pins, which are then not needed.

Where splash lubrication is relied on for oiling the main bearing, an oil pocket is usually formed on top of the upper half of the box; some of the oil splashed up by the connecting-rods finds its way into these pockets and is conducted to the liners and journal by an oil hole. In the illustration, the pocket is formed by two ribs *i*; the oil hole is shown at *j*.

When a main bearing is very long, as is always the case with the rear main crank-shaft bearing, there may be as many as three oil holes leading from the oil pocket to the inside. One oil hole is then placed at the middle of the bearing, and the other two are located about one-sixth the length of the bearing from its ends.

8. In some cases, one part of the main crank-shaft bearings of automobile engines is not cast integral with the crank-case, but is entirely separate therefrom and bolted in place to a partition placed crosswise and cast integral with the crank-case. An example of this kind of construction is found in the engine of the Rambler "Cross Country" car, and is illustrated in Fig. 5, the box being entirely removed from the crank-case and shown separated. The box is in two halves *a* and *b*, each of which has a rectangular opening to receive, respectively, the upper brass *c* and the lower brass *d*. When assembled over the crank-shaft journal, the two halves of the box are bolted to a cross-partition of the crank-case. The two brasses are adjustable in respect to the journal, each brass having an inclined face, as *c'*, for instance, against which bears one face of a wedge *e*, the other face of the wedge having a bearing in the box. Each wedge has two studs; by turning the nuts *f* the brasses can be brought closer together or slackened. The method provided for the adjustment of the boxes shown in Fig. 5 is very convenient, but it is very rarely encountered in practice. In nearly all cases where adjustable plain bearings formed separate from the crank-case are employed, adjustment is made by placing shims between the brasses or by removing shims. The two halves of the box are then rigidly bolted together, so that they virtually form a solid box.

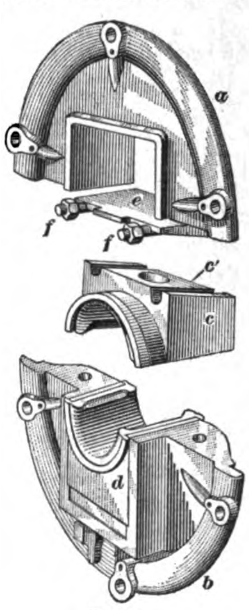

FIG. 5

SWIVEL BEARINGS

9. There are a number of places about an automobile where the yoke-and-eye-rod bearing, described in Art. 3, cannot be used, because it permits of motion in only one plane. Where the bearing is required to permit motion in different directions, a **swivel bearing** is used. The most prominent example of parts requiring a swivel bearing is the reach rod running from the steering-gear arm to the steering-knuckle arm; the first arm swings in a vertical plane and the second arm in a plane that is practically horizontal. Other examples are found in the control rods joining the throttle lever to the carbureter throttle, and the spark lever to the spark-advance-and-retard mechanism. In some cases, swivel bearings are also found on brake connections, and quite frequently on radius rods for rear axles, and to a slight extent, on front-axle radius rods. The case last mentioned is virtually confined to the model T Ford car, which uses a cross-spring in front and hence needs radius rods for the front axle.

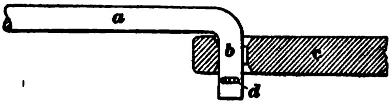

FIG. 6

10. The simplest form of swivel bearing is that shown in Fig. 6, which bearing is used considerably in popular-priced cars, on account of its low cost, for throttle and spark control rods. The round control rod *a* is bent at right angles at each end, the bent end *b* forming a journal that has a bearing in a hole drilled in the end of the lever *c*, which may be the carbureter throttle lever, a lever on the timer, the lever on the magneto breaker box, etc. To permit a limited motion in all directions, the hole in *c* is drilled somewhat larger than the end *b* and is *countersunk* at both sides; that is, tapered, as shown. The joint is prevented from coming apart by a cotter pin *d* passed through the end *b*. Sometimes a washer is placed on both sides of the lever *c* and around the journal *b*. The form of swivel bearing here illustrated is non-adjustable for wear; consequently, when wear occurs there will be considerable lost motion between the throttle lever or spark lever and the carbureter throttle lever or timer lever or magneto breaker-box lever that cannot be taken up without using control rods larger in

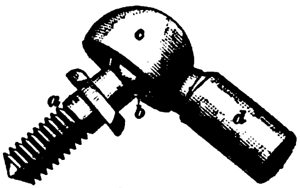

FIG. 7

diameter and reaming out the holes in the levers to which the control rods connect.

11. A form of swivel bearing for carbureter and spark control better than that shown in Fig. 6 is illustrated in Fig. 7. It is known as a *non-adjustable ball-and-socket ball joint*, and is usually made of brass. The stud *a* is fastened to the carbureter throttle lever or any similar lever, and carries a ball *b* on its end. This ball is inserted into a socket *c* having a lug *d* that is tapped out to receive the threaded control rod. The ball is prevented from coming out of the socket by spinning, or peening, the metal around the mouth of the socket down on the ball. When this swivel bearing has worn to an objectionable extent, it is supposed to be replaced with a new one.

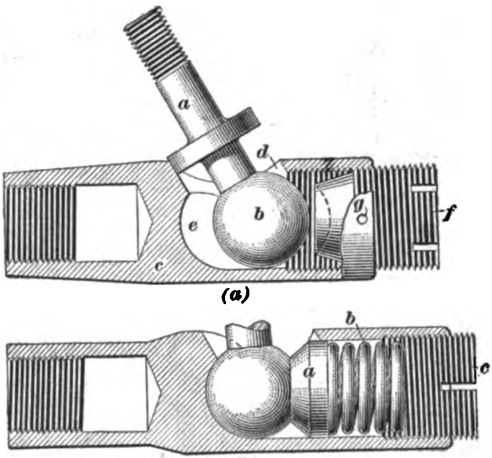

(a)

(b)

FIG. 8

12. An *adjustable ball-and-socket joint* that is used for control rods, and also occasionally for steering-gear reach rods, is shown in section, partly disassembled, in Fig. 8 (*a*). The stud *a*, with its ball *b*, is fitted to the end of the lever that is to be moved by the control rod; the socket *c* is screwed to the end of the control rod and locked with a locknut. The ball is inserted through an opening *d* in the socket and has a bearing against the spherical end *e* of the axial hole in the socket and the spherical end of the adjusting screw *f*. The outer end of the adjusting screw has three radial slots cut across it; a cotter pin passed through the hole *g* in the socket and one of the slots locks the adjusting screw, which can be turned by one-sixth of a turn in adjusting the bearing.

13. In Fig. 8 (*b*) is shown a *self-adjusting ball-and-socket joint* in which all wear is taken up automatically. This form of joint greatly resembles the one shown in (*a*). It has a follower *a* hollowed out to fit the ball, and a strong helical spring *b* is placed between this follower and the adjusting screw *c*. The spring always keeps the follower in contact with the ball and the latter in contact with the spherical part of the socket. The adjusting screw is kept locked by a cotter pin passed through a hole in the socket and one of the slots in the outer end of the screw. This form of ball-and-socket joint is largely used for the steering-gear reach rod, there being one at each end.

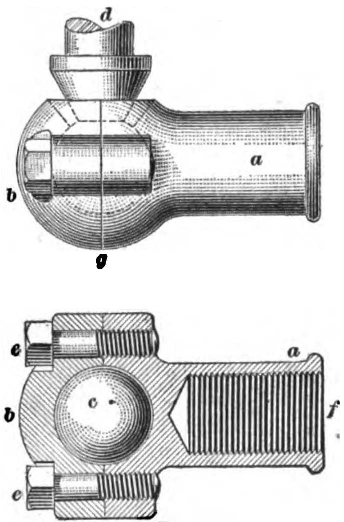

FIG. 9

14. In some self-adjusting ball-and-socket joints, there is a follower on each side of the ball and a strong helical spring behind each follower. Such a joint is sometimes used on the steering-knuckle steering arm, in which case it acts as a shock absorber, preventing road shocks from being transmitted to the steering gear.

In the smaller sizes, say for ¼-inch control rods, self-adjusting ball-and-socket joints are used for carbureter and spark advance connections on most of the higher-priced cars. Ball-and-socket joints as described in Arts. **12** and **13** are usually made of steel and are generally case-hardened.

15. An adjustable ball-and-socket joint that is often employed for hinging radius rods to the frame of the car is shown in Fig. 9. The socket is made in two parts *a* and *b*, each of which has a hemispherical depression machined therein to fit the ball *c* formed on the one end of the stud *d*, which is fastened to the side member of the frame of the car. The two halves of the socket are held together either by capscrews *e* or by stud bolts and nuts. Adjustment is made either by placing shims between the two halves of the socket or by filing the joint *g* so as to let the two halves come closer to the ball. The part *a* of the socket is usually threaded, as shown at *f*, to receive the radius rod, which then can be adjusted for length by screwing it into or out of the socket. When adjusted for length, the radius rod and the socket are locked together by setting a locknut tightly against the socket. In some cases the radius rod is not adjustable for length, but is brazed into the one part of the socket; or, one part of the socket is formed integral with the radius rod.

PLAIN THRUST BEARINGS

16. A bearing so constructed as to resist a thrust in the direction of the length of its journal is called a **thrust bearing.** In its simplest form, it consists of a shoulder of some part fastened to the shaft butting against a corresponding shoulder of the box, although a hardened-steel washer or a fiber washer may be interposed between the two shoulders for the purpose of reducing friction and preventing the cutting of the shoulders under a great thrust. A bearing thus constructed is called a ***plain thrust bearing***, and in automobile work is usually found in steering knuckles. However, in the model T Ford car, a plain thrust bearing is used at both sides of the differential housing inside the rear-axle tube, a fiber washer being interposed between each side of the differential housing and a flange of the axle housings, in which are placed the inner roller bearings on which the inner ends of the two halves of the axle shaft rotates. These bearings take the endwise thrust produced by the action of the large bevel gear and pinion, and by the side pressure on the wheels when turning corners.

In front axles, the weight of the car rests on the steering knuckles, the thrust being in line with the steering spindle bolt. This thrust is resisted by the one end of the steering knuckle butting against a jaw of the front axle, a washer of hardened steel, and sometimes several washers, being interposed between the two surfaces taking the thrust when a plain thrust bearing is employed.

MATERIALS FOR PLAIN BEARINGS

17. In automobile work, the journal of bearings as a general rule is of steel; often it is hardened and tempered, or *heat-treated*, as it is called, and finished by grinding in a grinding machine, which process makes the journal truly round, accurately to size, and very smooth. The metals used in the box are cast iron, hardened steel, phosphor-bronze, white brass, Babbitt, and, for bearings on which the load is very light, brass.

18. Cast iron, when copiously lubricated at all times, makes an excellent bearing material, especially when the journal is of hardened steel. It is open to the objection, however, that if the oil film between the cast-iron box and the steel journal is broken, owing to lack of sufficient lubrication, the cast iron will seize on the journal and both the box and the journal will be badly torn. For this reason, when cast iron is used, it is employed only in relatively unimportant bearings, where a plentiful supply of lubricant can be given; for instance, it is used in the engine of the model T Ford car for the cam-shaft boxes.

19. Hardened-steel boxes in the form of solid bushings are generally used in conjunction with hardened-steel journals. Both bushings and journals are usually ground after hardening to make them truly cylindrical. Boxes of this kind are sometimes found in very high-grade engines in the wristpin end of the connecting-rods, and in high-grade front axles in the ends of the jaws through which passes the hardened and ground spindle bolt of the steering knuckles. When well lubricated, hardened-steel boxes working in conjunction with hardened-steel journals will wear exceedingly well under pressures that would simply crush other kinds of boxes; even when indifferently lubricated, the wear is very small. This renders their use advisable for inaccessible places, and places in which lack of room demands a non-adjustable plain bearing of very great durability. The only reason against a more general adoption of hardened-steel boxes in places where they can be used is their high first cost.

20. **Phosphor-bronze,** made according to the specifications of the Society of Automobile Engineers, is an alloy containing approximately 80 per cent. of copper, 10 per cent. of lead, 10 per cent. of tin, and a quantity of phosphorus not exceeding one-quarter of 1 per cent., nor less than five one-hundredths of 1 per cent. This bearing metal stands up very well under heavy loads and lasts well even under scanty lubrication. In automobile engines, it is used considerably for both cam-shaft and wristpin bearings and in other places where it may be in contact with a hardened-steel journal. The use of phosphor-bronze boxes in connection with soft-steel journals is inadvisable, owing to the rapid wear of the soft steel, even under ample lubrication, when this combination of box and journal exists.

21. **White brass** is an alloy that contains from 3 to 6 per cent. of copper, not less than 65 per cent. of tin, and from 28 to 30 per cent. of zinc. This alloy is often used for main crank-shaft bearings and for connecting-rod crank-pin bearings, giving excellent results in conjunction with soft-steel journals when generously lubricated at all times.

22. **Babbitt** is a trade name that covers a large range of alloys made by melting together different proportions of tin, copper, antimony, and lead. It is a very soft bearing metal, has a low melting point, and can easily be fused in an iron ladle by an ordinary fire. Babbitt is relatively cheap and quite a good antifriction metal, for which reason the better grades of it are very extensively used in automobile engines for the crankshaft and the crankpin end of the connecting-rods, where the pressure on each bearing is relatively low. None of the Babbitt metals are suitable for wristpin bearings, because owing to their small size, the bearing pressure is very high.

For a high-grade Babbitt metal, the specifications of the Society of Automobile Engineers demand 84 per cent. of tin, 9 per cent. of antimony, and 7 per oent. of copper.

Die-cast Babbitt bearing brasses are now in extensive use; these brasses are cast in steel molds from which the air has been partly exhausted, or into which the molten metal is forced under pressure. Such brasses are interchangeable and are cast so close to the correct shape that they require no machine work or hand fitting to the boxes; hence, their replacement when badly worn is an easy matter.

23. **Brass** is not used as a bearing metal in engines, transmissions, axles, etc.; when serving as a bearing metal, its use is generally incidental to the part forming the box being made of one of the many alloys containing copper, tin, zinc, and lead that are usually spoken of as brass. Thus, the bearing boxes for the carbureter throttle valve stem are usually of brass, because the carbureter body is made of brass.

ANTIFRICTION BEARINGS

CLASSIFICATION

24. In all plain bearings the bearing surfaces of the box and the journal, when either is in motion, slide upon each other. Experience has shown that the resistance to sliding, that is, *sliding friction*, is very much greater than if rotating members of a bearing can roll upon each other; in other words, *rolling friction* is very much smaller than sliding friction under the same conditions. Bearings constructed so as to have rolling friction between the journal and the box are called **antifriction bearings.** Such bearings are divided into two general classes, in accordance with the means employed to substitute rolling friction for sliding friction, namely, *roller bearings* and *ball bearings.*

25. **Roller bearings** may be divided into *straight roller bearings* and *tapered roller bearings.* Straight roller bearings may be subdivided into *flexible roller bearings* and *solid roller bearings*, according to whether the rollers are flexible in construction or solid. In both types, the rollers are cylindrical, or *straight*, in machine-shop parlance. Flexible, and also solid straight, roller bearings are generally adapted for radial loads only, that is, loads acting at right angles to the center line, or *axis*, of the journal; by forming the rollers with a shoulder they can be made to carry axial, or thrust, loads, that is, loads acting in the direction of the axis of the journal. Straight roller thrust bearings, while in existence, are not used in automobile work. Tapered roller bearings have rollers that are frustums of cones and are so mounted upon hardened and ground steel bushings, called *races*, that the center lines of all the rollers lie on the surface of a right cone whose axis coincides with the axis of the journal; when this condition is fulfilled, the rollers will have a true rolling motion. A tapered roller bearing can carry both radial and axial loads.

26. Ball bearings used in automobile work can be divided into three general classes, namely, *radial ball bearings*, *radial-and-thrust ball bearings*, and *axial*, or *thrust*, *ball bearings*. Radial ball bearings, as implied by the name, are intended for radial loads, which means loads at right angles to the shaft, although they can generally resist a slight thrust load. Radial-and-thrust ball bearings can take radial and thrust loads with equal facility; they differ from combination radial-and-thrust bearings in that the two kinds of load are borne by a single bearing. Ball thrust bearings are intended entirely for axial loads, that is, thrusts in the direction of the center line of the shaft.

All ball bearings consist of at least three elements, which are the *inner race*, the *balls*, and the *outer race*. The inner race is attached to the shaft and forms the journal; the outer race is attached to the bearing housing and serves as the box; and the balls provide for rolling friction.

27. Antifriction bearings are used in automobile work for the front wheels, the rear axle and the transmission, as well as for dynamo armatures, electric starting motor armatures, magneto armatures, fans, etc., and in a very few cases they are employed for main bearings of crank-shafts.

STRAIGHT ROLLER BEARINGS

28. Flexible roller bearings are made in two styles, which are known as the standard Hyatt roller bearing and the high-duty Hyatt roller bearing. Both types of bearing embody the principle of a flexible roller, but the first type named is intended for light radial loads, while the second type is used for heavy radial loads.

29. *A standard Hyatt roller bearing* is shown disassembled in Fig. 10. The rollers *a* are wound helically from flat steel and are ground cylindrical after hardening. They are set in a cage *b* made of two washers properly spaced by ribs *c*, to which the washers are securely riveted. Projections *d* on each washer enter the ends of the rollers and thus prevent them from falling out of the cage. The rollers are sometimes run directly on the journal and the box of the bearing; in better work, both the journal and the box are protected by removable liners. A liner for the journal is shown at *e*, and a liner for the box at *f*. These liners are formed from soft-sheet steel, and since they are split as shown, they are easily forced into place or removed when worn enough to need replacement. The outer liner should be held from turning in the box by making the conical projection *g* enter a hole drilled for this purpose into the box. A liner for the journal is often omitted; when the metal of the journal is very soft, however, a case-hardened steel liner is necessary. This liner may have the form shown in *e* or it may be in the form of a solid bushing that is pressed on the journal. Likewise, the outer liner may be in the form of a solid bushing.

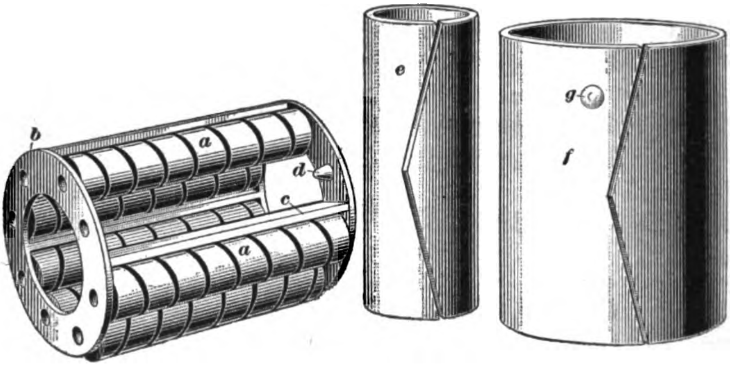

Fig. 10

30. The ***high-duty Hyatt roller bearing*** differs from the standard bearing in that another brand of steel is used for the rollers, making them suitable for higher loads, and also in that a somewhat different form of cage is used, as shown in Fig. 11. It also differs from the standard bearing in that the liners, if any are used, are made in the form of thick, solid bushings that have been carefully ground inside and outside after hardening. Liners are used only when the journal and the box are of soft material. When the box is of hardened steel, no outer liner is used, and when the journal is of hardened steel no inner liner is employed. The liners are often called the *inner* and *outer races*.

The cage of this high-duty bearing is made of two washers *a* properly spaced by distance rods *b*, there being a distance rod between each pair of rollers, so that they can never come in contact with each other. In the standard bearing cage, as reference to Fig. 10 will show, there are two rollers between each pair of distance ribs, at *c*; consequently, the two rollers of each nest will be in contact when the journal is rotating.

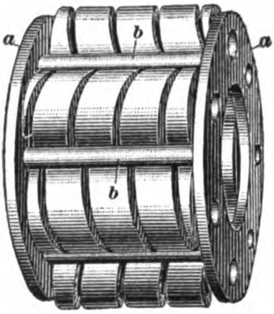

FIG. 11

When either an inner or an outer race, or both, are used, the race or races are supposed to be held from rotating on their seats either by pressing them tightly into place or by locking them in some convenient manner.

31. The object in putting the rollers in a cage in any roller bearing is to prevent them from twisting out of position, as they can be in contact with the journal or the box throughout their whole length only when the center line of each roller is in the same plane with the center line of the bearing.

32. In Fig. 12 is shown a *Norma roller bearing*, in which a series of cylindrical rollers *a* run between a cylindrical inner race *b* and a slightly curved outer race *c*. This curved bearing face of the outer race permits this form of bearing to undergo slight errors of alinement without undue stresses on the rollers or races; such errors may result from faulty mounting of the races or from bending the shaft on which the inner race is mounted. The rollers are caged between two rings *d* and *e* and are mounted on pivot pins *f* fastened to these two rings. A locking ring *g* locks the cage together, it being slotted, as shown at *g'*, to pass over a groove *f'* turned in each pivot pin. The rollers and races are of hardened and ground steel.

The Norma bearing differs from the Hyatt bearing chiefly in that the rollers are in the form of solid bushings.

33. Neither the Hyatt nor the Norma roller bearing, nor any other bearing of this type, is suitable for any other than a radial load. When an axial or a thrust load comes on such a bearing, this load must be taken by a separate thrust bearing of either the plain or the antifriction type. By using a special form of roller, however, in conjunction with a special form of race, a cylindrical roller bearing can be made to carry an axial load in one direction. The *Bower roller bearing*, which is shown in Fig. 13, is a bearing capable of carrying both radial and axial loads.

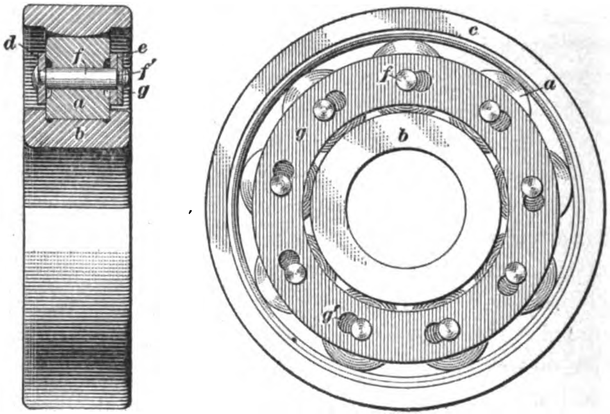

FIG. 12

In view (*a*) one of the rollers of the Bower bearing is shown in perspective. It consists of a cylindrical part *a* that carries the radial load, an enlarged part *b* in the form of two frustums of cones, and two pivots *c* that pass through holes in the side rings of the cage when the bearing is assembled and thus confine each roller.

A section through a Bower bearing is shown in (*b*). The outer race *a* has an enlarged bore at one side and a conical shoulder *b*; the inner race *c* is grooved and has a conical shoulder *d*. A thrust load in the direction of the arrow *e* is taken by the shoulders *b* and *d* of the inner and outer races and the conical surfaces of the enlarged end of the roller.

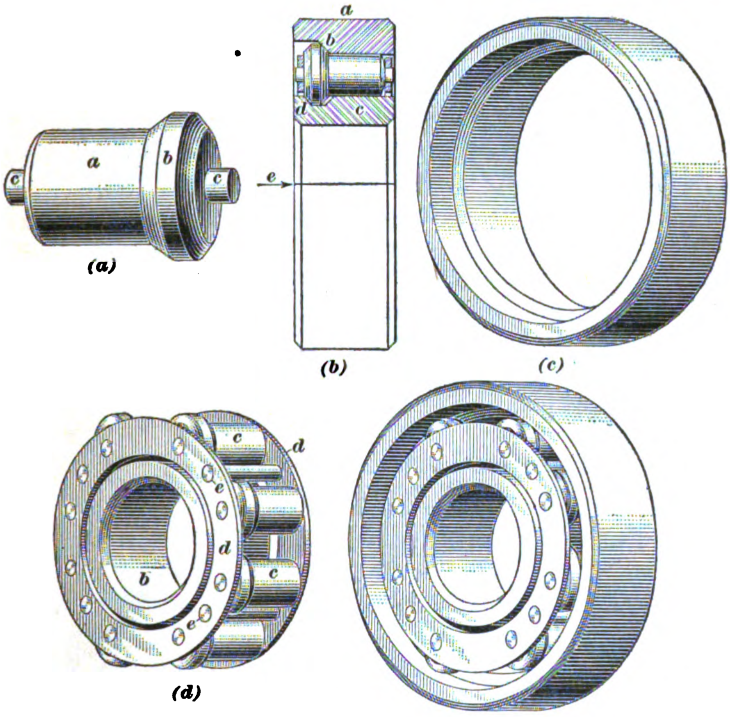

(*a*) (*b*) (*c*) (*d*) (*e*)

FIG. 13

In view (*c*), the outer race *a* is shown in perspective, and in view (*d*) the inner race *b* and the rollers *c* in their cage are shown assembled. The cage is composed of two rings *d* properly spaced and held together by the distance pieces *e*. The complete assembled bearing is shown at (*e*).

Like all other cylindrical roller bearings, the Bower bearing is non-adjustable radially, excellence of material and workmanship being relied on to prevent undue wear and subsequent looseness. Replacement of worn parts is easily effected.

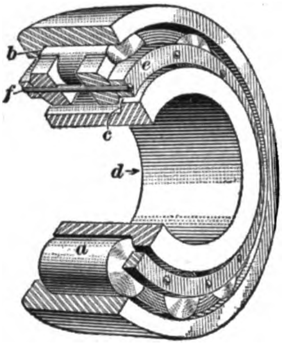

FIG. 14

34. The *Standard roller bearing*, shown in perspective and partly in section in Fig. 14, employs cylindrical rollers *a* with conical ends. The outer race is formed with a conical shoulder *b*, and the inner race has a conical shoulder *c*. The radial load is carried by the cylindrical part of the rollers and races, and an axial load in the direction of the arrow *d* is carried by the shoulders *b* and *c* and the conical ends of the rollers. The rollers are confined by being set in pockets formed in the cage *e*, which is composed of rings held together by rivets *f*.

TAPERED ROLLER BEARINGS

35. A **tapered roller bearing,** as implied by the name, employs tapered rollers, that is, rollers that are frustums of cones, running in contact with tapered inner and outer races. The most widely used bearing of this form, in automobile work, is the *Timken roller bearing*, which is shown in Fig. 15. In (*a*) is shown a section through the inner and outer race with a roller *a* between the conical (tapered) surfaces of the inner race *b* and the outer race *c*. The inner race is cylindrical on its inside, and the outer race on its outside. The inner race has two ribs with conical sides, the rib *d* entering a corresponding groove *e* in the small end of the roller *a*. The conical face of the rib *f* bears against the conical large end of the roller, as shown. The ribs *d* and *f*, in conjunction with a cage in which the rollers are set, hold the rollers in proper alinement with the races. The cage is shown separately at (*b*); it is pressed in one piece from sheet steel into the form shown. The inner race is shown in perspective in view (*c*), and assembled with the cage and rollers, in (*d*). When thus assembled, the inner race, cage, and rollers cannot separate. The outer race is shown separately in (*e*), and the whole bearing assembled in (*f*).

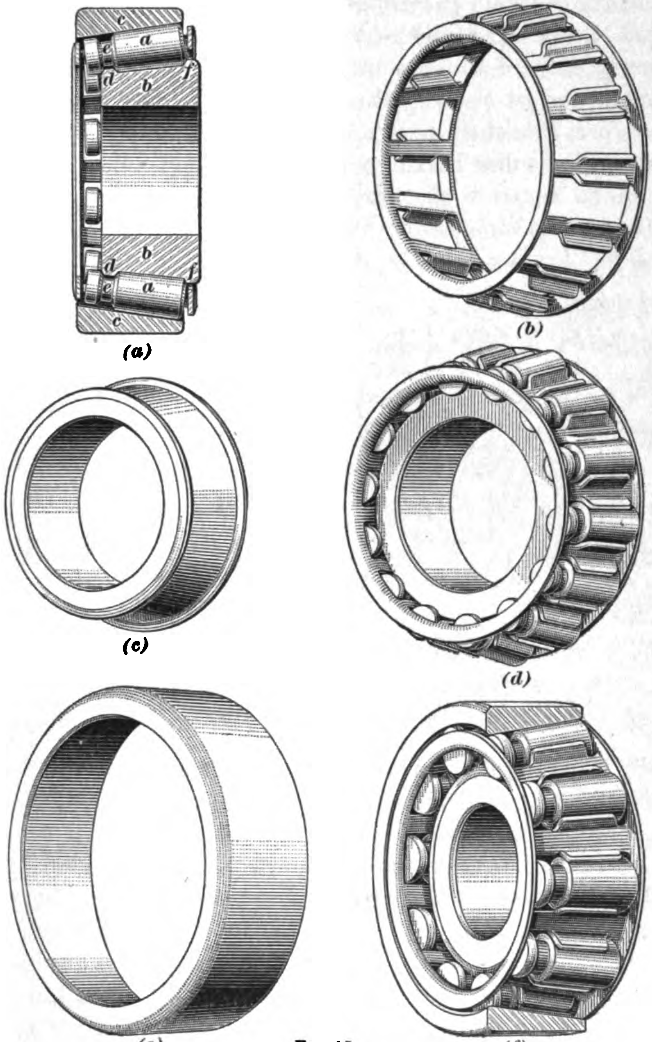

(a) (b) (c) (d) (e) FIG. 15 (f)

The outer and inner races have their bearing surfaces formed as frustums of cones whose apexes coincide and lie on the center line of the journal; the center lines of the rollers lie on the surface of a cone whose apex coincides with that of the inner and outer races, and consequently the rollers have a true rolling motion. As in cylindrical roller bearings, the cage for the rollers prevents their sidewise displacement.

A tapered roller bearing carries radial and axial loads, and any radial looseness due to wear is readily taken up by forcing the inner race farther into the outer race. This form of bearing is always mounted so as to permit this operation to be easily done. The races and rollers are made of hardened steel and are very accurately ground after hardening. Tapered roller bearings are largely used in the construction of rear axles.

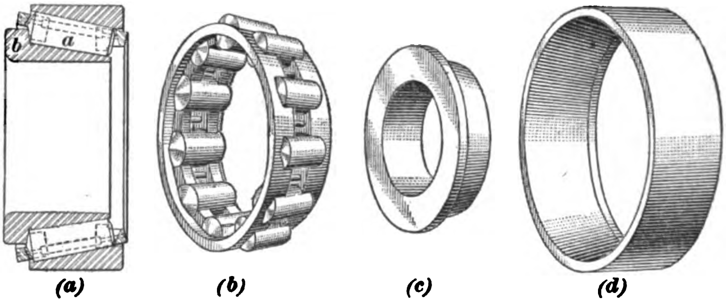

FIG. 16

36. The improved *Grant roller bearing*, made by the Standard Roller Bearing Company, is shown in Fig. 16. The tapered rollers *a*, as shown in the sectional view (*a*), are not grooved and their conical large end bears against a conical shoulder *b* of the inner race. The outer race is tapered inside and cylindrical outside. The rollers are set in pockets formed in a two-part steel cage, the two parts of which are held in place by stayrods, after the rollers have been assembled into the cage, as shown in view (*b*). A perspective view of the inner race is shown in (*c*), and of the outer race in (*d*). This roller bearing consists of three separate structures, namely, the inner race, the outer race, and the cage with its rollers.

RADIAL BALL BEARINGS

37. Radial ball bearings are divided into two general types: the *full ball bearing* and the *silent ball bearing*. Each type may have a single row of balls, when it is called a *single-row ball bearing*, or it may have several rows of balls, when it is called a *multiple row-ball bearing*. In present automobile work, a radial ball bearing with more than two rows of balls is hardly ever found. Radial ball bearings are often spoken of as *annular ball bearings*, there being an annular space between the inner and the outer race, which space contains the balls.

38. A full-type annular ball bearing with a single row of balls, as made by the Standard Roller Bearing Company, is shown in Fig. 17 (*a*), in which illustration part of the outer race *a* is cut away in order to show the assembly. The outer race *a* and the inner race *b* are grooved to a larger radius than that of the balls *c* in order that the balls may be in contact with each race at a single point in the same plane as the centers of the balls. The balls are introduced between the races through a slot in the outer race, which slot cannot be seen in view (*a*), but is indicated at *d* in the cross-section shown in (*b*).

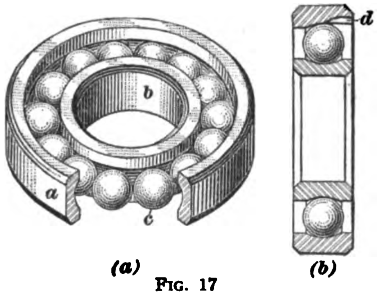

FIG. 17

39. In all full-type annular ball bearings, which derive their name from the fact that the annular space between the two races is filled with balls, some means must be provided for getting the balls into place. In some bearings of this type the outer race is slotted and the slot left open; in others the slot is closed by a filling piece; and in yet another form the balls are introduced through a radial hole in the outer race, which hole is afterwards closed by a hardened-steel plug that is prevented from coming out by the housing into which the outer race is forced. In still another form of annular bearing of the full type, the outer race is made cylindrical, only the inner race being grooved; consequently, the outer race can be slipped in place after all the balls are placed in the groove of the inner race. This form of bearing, which was used at one time in the engines and also in the rear axles of White cars, is not a self-contained unit; that is, the inner and outer races and balls will easily come apart when either race is removed from its seat.

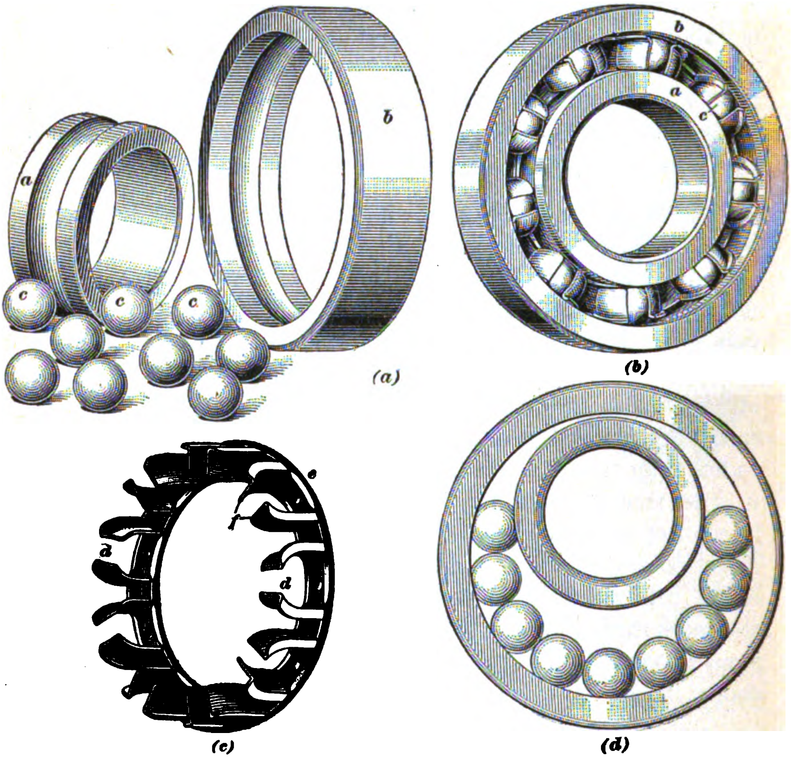

FIG. 18

40. Annular ball bearings of the silent type have their balls set in cages, so that they cannot come in contact with each other. They derive their name from the absence of the clicking sound, caused by the balls striking against each other, that is found in ball bearings of the full type. Silent-type annular bearings are made by many different firms, the various makes differing from each other chiefly in the form of cage that is employed.

41. Fig. 18 illustrates the silent annular bearing made by the Hess-Bright Company and known as the *H B—D W F bearing*. In view (*a*) is shown the bearing before it is assembled, and in (*b*), the completely assembled bearing. View (*c*) shows the cage that confines the balls. The same parts are lettered alike in these views. The bearing is of the single-row type. The inner race *a* is cylindrical inside and is grooved outside to a radius equal to the ball diameter, as is also the outer race *b*. The balls *c* are set in pockets *d* of the cage *e*. This bearing is distinguished from many other silent types of ball bearings in that the balls can be and are introduced between the races without either one of them having a filler slot; that is, the grooves of the races are continuous. The pockets in the cage *e* consist of **U**-shaped sheet-brass stampings, the legs *f* of which are substantially straight and parallel before assembly of the bearing.

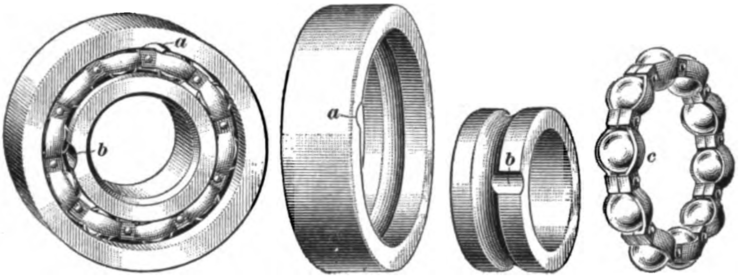

(*a*) (*b*)

Fig. 19

To assemble the bearing, the inner race is inserted eccentrically in the outer race and the proper number of balls are dropped between the races, as is indicated in (*d*). The balls are then spaced equidistantly, and the cage is put in place so that a ball sits in each pocket. The free ends of the legs *f* are then bent over the balls, which operation assembles the bearing into a unit of which the component parts cannot come apart.

42. Whether or not an annular silent type ball bearing that forms a unit when assembled must have filler slots cut in the races is determined solely by the number of balls the manufacturer has decided to use between the races. When a large number of balls are used, the bearing must have filler slots in its races; sometimes the outer race has a filler slot, sometimes the inner race has such a slot, and sometimes both races have these slots. An example of the latter type is the *New Departure single-row annular ball bearing*, which is shown assembled in Fig. 19 (*a*) and disassembled in (*b*). In the illustration the filler slot for the outer race is shown at *a* and the filler slot for the inner race at *b*. The ball cage, or separator, *c* containing the balls is made in two halves and of sheet steel; the two halves are riveted together after the bearing has been assembled.

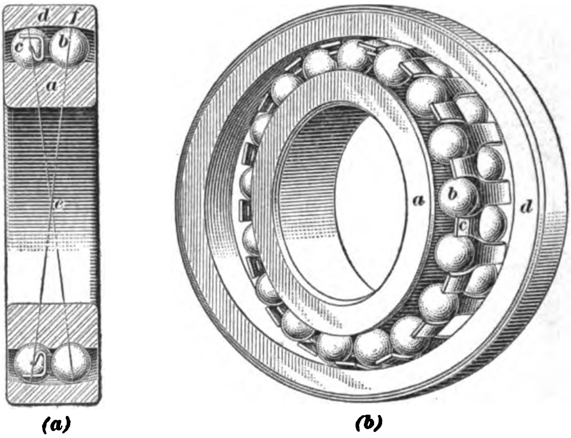

(a) (b)

Fig. 20

43. It is possible to design an annular ball bearing in such a manner that it can be entirely filled with balls or be made of the silent type, just as is desired, without having filler slots in either race; such a bearing, however, will not be a unit when assembled. A well-known example of this form of bearing is the *S K F double-row self-alining ball bearing* shown in section in Fig. 20 (*a*) and partly assembled in (*b*). In both views, the same parts are lettered alike. The inner race *a* has two grooves side by side and so spaced that the balls *b* of the two rows lie staggered in the pockets of the cage *c*. This feature can be clearly seen in view (*b*). A curvature having a radius *e f* struck from the center *e* of the bearing is given to the outer race *d*, and as a consequence the inner race, which is rigidly mounted on the shaft to which it is applied, can rock slightly in reference to the outer race under any springing of the shaft

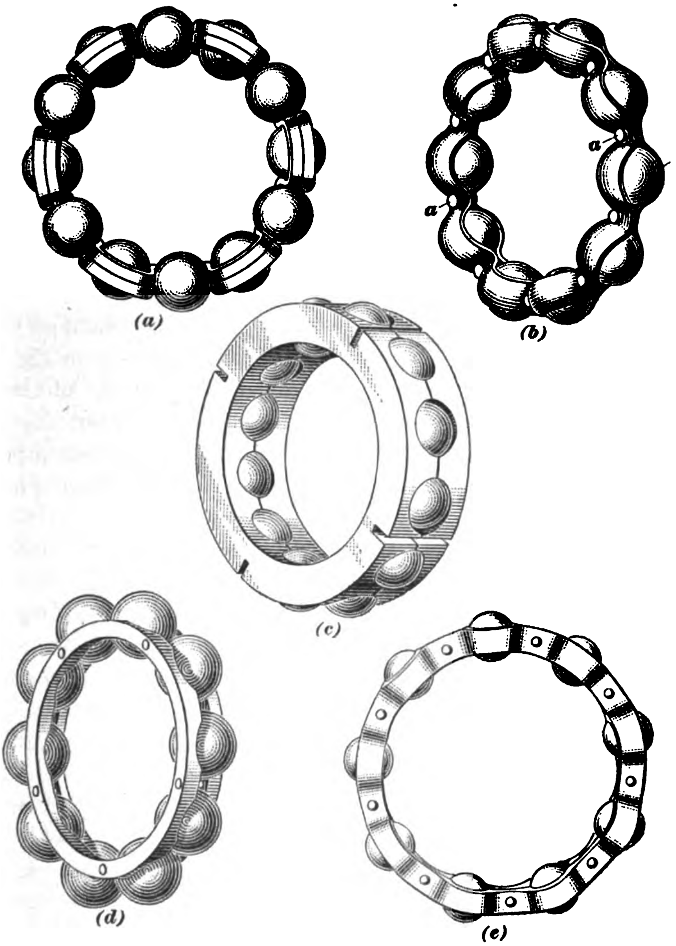

FIG. 21

without cramping the balls in any way. The cage *c* is formed from sheet steel. View (*b*) indicates how the bearing is assembled and shows that the outer race is free from the balls and the inner race when the bearing is not attached to a shaft and housing.

44. In some radial ball bearings, as, for instance, in those made by Fichtel and Sachs, and known as the *F. & S. ball bearings*, self-alinement is secured by making the outer surface of the outer race part of a sphere and seating it in a spherical seat.

45. Various forms of ball cages are used for silent annular bearings by different makers. Some of these cages have already been shown in connection with several bearings illustrated and described; several other cages are shown in Fig. 21. In order to illustrate these cages clearly, they are all shown assembled with the balls in place but removed from the two races; it must be distinctly understood that in the actual bearing the cages are assembled after the balls have been placed into the races.

Three different forms of cages used in the F. & S. annular bearings are illustrated in views (*a*), (*b*), and (*c*). The one shown at (*a*) is known as a *ribbon cage* or a *ribbon separator*, the term ball separator being sometimes used instead of the term ball cage. This ribbon cage is stamped from sheet steel and is stiffened by ribs. The sheet metal cage at (*b*) is made from two like rings pressed into shape and united by rivets ***a*** when the bearing is assembled. The so-called *solid cage* at (*c*) is machined from solid metal in two halves, with pockets to receive the balls, which also are machined out of the solid; the two halves are fastened together rigidly when assembling the bearing. The ball cage used in the *R. I. V. annular bearings* is shown in (*d*). It greatly resembles the cage shown in (*c*), and is also machined from the solid in two halves that are riveted together when the bearing is assembled. The cage shown in (*e*), which also is made in two halves pressed from sheet metal and riveted together when assembling the bearing, is used in the annular ball bearings made by the Standard

Roller Bearing Company. This cage differs from the one shown in view (*b*) only in that it contains fewer balls, comparing bearings of the same dimensions of the two makes, because the bearing in which it is used has no filler slots in either race.

46. Although annular ball bearings are designed primarily to carry a radial load, they can safely carry an axial load equal to about one-tenth the safe radial load. When the axial load becomes greater than is safe, this load is taken by a separate thrust bearing, which may be combined into a single unit with the radial bearing, but more frequently is entirely separate.

47. The annular type of ball bearings was developed in Europe, where the metric system of measurements is in common use, and hence was made in sizes measured in millimeters. When the manufacture of these bearings was taken up in the United States, the American makers adopted these same measurements in order that their bearings would interchange with the imported bearings, which accounts for the fact that to this day the dimensions of annular ball bearings are expressed in millimeters instead of inches.

The manufacture of single-row annular ball bearings is standardized to a large degree, so that bearings made by different manufacturers, but having the same trade number, will interchange perfectly. The single-row annular bearings in most common use are made in five series, in both the full and silent types. These wires are as follows:

1. *Medium and Heavy Series, Narrow Type.*—Bearings of this series are designated by numbers that identify them, and are below 100.
2. *Light Series, Narrow Type.*—The identification numbers begin with 100 and are below 200.
3. *Light Series, Wide Type.*—The identification numbers begin with 200 and are below 300.
4. *Medium Series, Wide Type.*—The identification numbers begin with 300 and are below 400.
5. *Heavy Series, Wide Type.*—The identification numbers begin with 400 and are below 500.

The identification number is usually stamped on one of the races, and sometimes on both, and even on the ball cage. When this number is known, the series is also known; thus, if an annular ball bearing is stamped 308, it belongs to the medium series, wide type.

TABLE I

SINGLE-ROW ANNULAR BALL BEARINGS, MEDIUM AND HEAVY SERIES, NARROW TYPE

No. of Bearing	Inside Diameter		Outside Diameter		Width	
	Inches	Millimeters	Inches	Millimeters	Inches	Millimeters
1	.4724	12	1.4567	37	.3543	9
2	.5905	15	1.5748	40	.3543	9
3	.7874	20	2.0472	52	.3937	10
4	.9843	25	2.4409	62	.4724	12
5	1.1811	30	2.8346	72	.5118	13
6	1.3780	35	3.1496	80	.5512	14
7	1.5748	40	3.5433	90	.6299	16
8	1.7717	45	3.9370	100	.6693	17
9	1.9685	50	4.3307	110	.7480	19
10	2.1653	55	4.6063	117	.7480	19
11	2.3622	60	5.0000	127	.7874	20
12	2.5591	65	5.3937	137	.8661	22
13	2.7559	70	5.7874	147	.9449	24
14	2.9528	75	6.1811	159	.9843	25
15	3.1496	80	6.6141	168	1.0630	27
52	.7874	20	2.5591	65	.5512	14
53	.8661	22	2.8346	72	.6299	16
54	.9843	25	3.1496	80	.6693	17
55	1.0630	27	3.4645	88	.7480	19
56	1.1811	30	3.7402	95	.7874	20
57	1.3780	35	4.0551	103	.8661	22

The identification numbers and sizes of the most common single-row annular ball bearings are given in Tables I to V, the sizes being given in both millimeters and inches.

48. Although the practice of designating annular single-row ball bearings by the numbers here given is commonly followed, there are exceptions. Thus, the New Departure bearings of this type have the figure 1 prefixed to the trade numbers given in Tables I to V. For instance, the New Departure bearing having the number 1404 has an inside diameter of 20 millimeters, an outside diameter of 72 milli-

TABLE II

SINGLE-ROW ANNULAR BALL BEARINGS, LIGHT SERIES, NARROW TYPE

No. of Bearing	Inside Diameter		Outside Diameter		Width	
	Inches	Millimeters	Inches	Millimeters	Inches	Millimeters
102	.3937	10	1.2598	32	.3543	9
103	.5905	15	1.4567	37	.3543	9
104	.7874	20	1.6535	42	.3543	9
105	.9843	25	2.0472	52	.3543	9
106	1.1811	30	2.4409	62	.3937	10
107	1.3780	35	2.7559	70	.3937	10
108	1.5748	40	3.1496	80	.4331	11
109	1.7717	45	3.3465	85	.4331	11
110	1.9685	50	3.5433	90	.4331	11
111	2.1653	55	3.9370	100	.4724	12
112	2.3622	60	4.1339	105	.4724	12
113	2.5591	65	4.5275	115	.5512	14
114	2.7559	70	4.7245	120	.5512	14
115	2.9528	75	5.1182	130	.6299	16
116	3.1496	80	5.3149	135	.6299	16
117	3.3465	85	5.7086	145	.7087	18
118	3.5433	90	5.9056	150	.7087	18
119	3.7402	95	6.2992	160	.7874	20
120	3.9370	100	6.4960	165	.7874	20
121	4.1339	105	7.0867	180	.8661	22
122	4.3307	110	7.2834	185	.8661	22

meters, and a width of 19 millimeters, which are the same dimensions as those of bearing No. 404 in Table V. No confusion arises in practice from these differences of numbering when a bearing is to be replaced by one of the same number

TABLE III

SINGLE-ROW ANNULAR BALL BEARINGS, LIGHT SERIES, WIDE TYPE

No. of Bearing	Inside Diameter		Outside Diameter		Width	
	Inches	Millimeters	Inches	Millimeters	Inches	Millimeters
204	.7874	20	1.8504	47	.5512	14
205	.9843	25	2.0472	52	.5905	15
206	1.1811	30	2.4409	62	.6299	16
207	1.3780	35	2.8346	72	.6693	17
208	1.5748	40	3.1496	80	.7087	18
209	1.7717	45	3.3465	85	.7480	19
210	1.9685	50	3.5433	90	.7874	20
211	2.1653	55	3.9370	100	.8268	21
212	2.3622	60	4.3307	110	.8661	22
213	2.5591	65	4.7244	120	.9055	23
214	2.7559	70	4.9213	125	.9449	24
215	2.9528	75	5.1181	130	.9843	25
216	3.1496	80	5.5118	140	1.0236	26
217	3.3465	85	5.9055	150	1.1024	28
218	3.5433	90	6.2992	160	1.1811	30
219	3.7402	95	6.6929	170	1.2598	32
220	3.9370	100	7.0866	180	1.3386	34
221	4.1339	105	7.4803	190	1.4173	36
222	4.3307	110	7.8740	200	1.4961	38

and of the same make; when it is to be replaced by one of a different make, either the maker or his catalog is consulted for the trade order number.

It must not be inferred that only the bearings given in Tables I to V are manufactured; smaller or larger bearings can be obtained in the five series, either on regular or special order, and special sizes to suit special conditions are also manufactured.

TABLE IV

SINGLE-ROW ANNULAR BALL BEARINGS, MEDIUM SERIES, WIDE TYPE

No. of Bearing	Inside Diameter		Outside Diameter		Width	
	Inches	Millimeters	Inches	Millimeters	Inches	Millimeters
300	.3937	10	1.3780	35	.4331	11
301	.4724	12	1.4567	37	.4724	12
302	.5906	15	1.6535	42	.5118	13
303	.6693	17	1.8504	47	.5512	14
304	.7874	20	2.0472	52	.5905	15
305	.9843	25	2.4409	62	.6693	17
306	1.1811	30	2.8346	72	.7480	19
307	1.3780	35	3.1496	80	.8268	21
308	1.5748	40	3.5433	90	.9055	23
309	1.7717	45	3.9370	100	.9843	25
310	1.9685	50	4.3307	110	1.0630	27
311	2.1653	55	4.7244	120	1.1417	29
312	2.3622	60	5.1181	130	1.2205	31
313	2.5591	65	5.5118	140	1.2992	33
314	2.7559	70	5.9055	150	1.3780	35
315	2.9528	75	6.2992	160	1.4567	37
316	3.1496	80	6.6929	170	1.5354	39
317	3.3465	85	7.0867	180	1.6142	41
318	3.5433	90	7.4803	190	1.6929	43
319	3.7402	95	7.8741	200	1.7717	45
320	3.9370	100	8.4646	215	1.8504	47
321	4.1339	105	8.8583	225	1.9291	49
322	4.3307	110	9.4488	240	1.9685	50

Neither does each manufacturer necessarily make all five series of annular single-row ball bearings.

In a very few instances, automobile manufacturers have made their own annular bearings to their own standards; such bearings, for replacement purpose, must as a general rule be obtained from the proper automobile manufacturer.

49. All annular ball bearings are non-adjustable; they are properly assembled at the factory and are intended to be replaced with new ones when worn to an objectionable degree. In many cases, worn annular ball bearings can be repaired, however, at small cost, either at the factory where they were made or at establishments specializing on this class of repair work. The repair is effected by regrinding both races and

TABLE V

SINGLE-ROW ANNULAR BALL BEARINGS, HEAVY SERIES, WIDE TYPE

No. of Bearing	Inside Diameter		Outside Diameter		Width	
	Inches	Millimeters	Inches	Millimeters	Inches	Millimeters
403	.6693	17	2.4409	62	.6693	17
404	.7874	20	2.8346	72	.7480	19
405	.9843	25	3.1496	80	.8268	21
406	1.1811	30	3.5433	90	.9055	23
407	1.3780	35	3.9370	100	.9843	25
408	1.5748	40	4.3307	110	1.0630	27
409	1.7717	45	4.7245	120	1.1417	29
410	1.9685	50	5.1181	130	1.2205	31
411	2.1653	55	5.5119	140	1.2992	33
412	2.3622	60	5.9055	150	1.3780	35
413	2.5591	65	6.2992	160	1.4567	37
414	2.7559	70	7.0867	180	1.6535	42
416	3.1496	80	7.8740	200	1.8898	48
418	3.5433	90	8.8583	225	2.1260	54
420	3.9370	100	10.4331	265	2.3622	60

substituting larger balls; owing to the special machinery and the high degree of workmanship required, this work cannot be done in garages or ordinary machine shops, but must be done by specialists.

The great success that has been obtained with annular bearings is in a large degree to be attributed to their non-adjustability, which feature prevents their overloading by a wrong adjustment.

RADIAL-AND-THRUST BALL BEARINGS

50. The earliest form of ball bearing suitable for combined radial and thrust loads was developed in the early days of the bicycle industry, and from the form of its races it is called the *cup-and-cone ball bearing.* Such a bearing is shown in cross-section in Fig. 22, the one illustrated being the inside front-wheel bearing used in the Maxwell "25" car. Bearings of the type illustrated are not regularly on the market, but are either made by the automobile manufacturer himself or to his order.

The *cup a* forming the outer race is so shaped that it comes in contact with each ball at two points, as at *b* and *c*; the *cone d* forms the inner race and is in contact with each ball at a point. There are thus three points of contact for each ball, whence the name *three-point ball bearing* is derived. A groove is turned in the outer race, into which is sprung a split retainer ring *e*, the purpose of which is to retain the balls in the cup when the cone is removed. This bearing can carry a thrust load in only one direction, which is indicated by the arrow *f*. The cone in this particular case is the stationary member of the bearing, and the cup the movable member; but in other cases the cup is the stationary member.

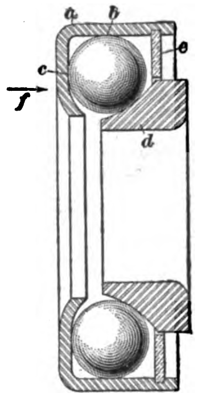

FIG. 22

With the ordinary cup-and-cone ball bearing, it is customary to fill the space between the cup and the cone with as many balls as it will hold; that is, to make it a full-type bearing.

51. The application of the cup-and-cone type of bearing to the front wheel of the Maxwell "25" car is shown in Fig. 23, in which *a* is the steering-knuckle spindle formed integral with the steering knuckle. The inside bearing is shown at *b* and the outside bearing at *c*. The cups of both bearings are pressed into the hub *d* of the front wheel; the cone of the inside bearing is pressed on the spindle *a* against a shoulder formed thereon. The cone *e* of the outside bearing is threaded internally to fit a thread of the spindle, and by turning it in or out the two bearings are adjusted. After adjustment the cone *e* is locked in place by a locknut *f* of the castellated type and a washer *g*. This washer is prevented from rotating by a lug that is formed integral with it entering a longitudinal slot cut into the threaded part of the spindle. Rotation of the cone *e* while setting up the locknut is thus prevented by this washer *g*. The castellated locknut *f* is positively locked to the spindle by the cotter pin *h* passing through a slot of the nut and through the spindle. The steering knuckle shown is of the reversed Elliott type, that is, the spindle and yoke are one piece and the end of the axle bar is pivoted in the yoke.

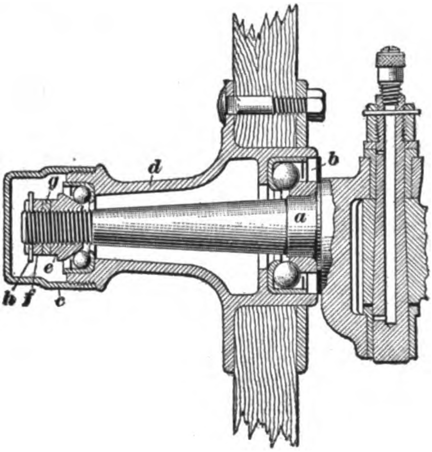

FIG. 23

On first thought it would appear that the wear of the cups, cones, and balls could be readily compensated for in cup-and-cone ball bearings by adjusting the one cone. This is not possible, however, except to a very slight degree, because the cones wear out of round, a groove being formed on the loaded side, which groove is deepest at the point where the load is greatest.

A pair of cup-and-cone ball bearings combined, as in Fig. 23, gives an assembly that will resist thrust in opposite directions.

52. A radial-and-thrust ball bearing made by the New Departure Manufacturing Company under the name of the *Radax ball bearing*, which takes thrust loads in only one direction, is shown in Fig. 24. The bearing is of the two-point contact, silent type, being fitted with a ball separator. In (*a*) the bearing is shown in section, the balls being in contact with the inner race *a* at *b*, and with the outer race *c* at *d*. At *e* the separator is shown in section. The races are so made that the two points of contact of each ball lie on a cone whose apex is on the center line of the journal; under this condition the balls have a true rolling motion. In view (*b*) are shown in perspective the inner race *a* and the outer race *c* and also the separator *e* with the balls in place. The separator is made of steel and in two parts, which are riveted together after the balls and separator have been assembled over the inner race; the separator, balls, and inner race are then a unit. In (*c*) the bearing is shown completely assembled.

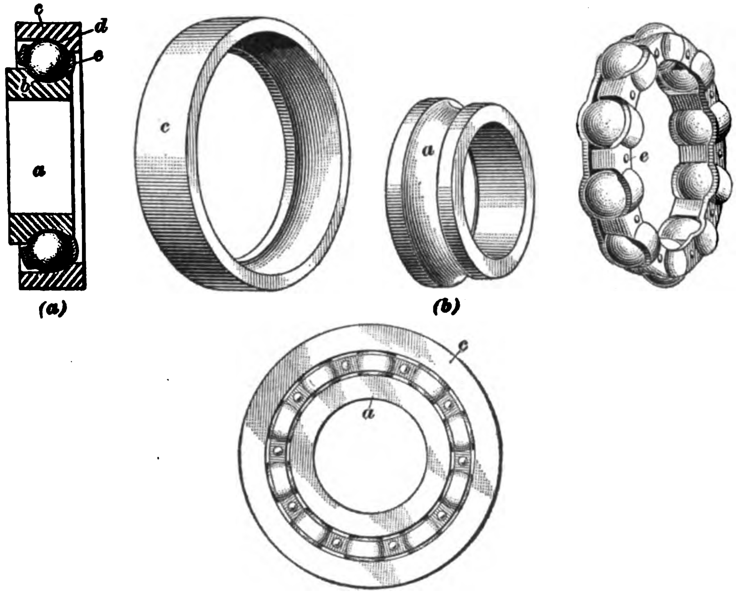

(a) (b)

(c)

Fig. 24

Radax bearings are made to interchange with standard radial annular bearings.

53. The *New Departure double-row ball bearing* shown in Fig. 25 is intended for combined radial and thrust loads, and can take thrusts in opposite directions. It greatly resembles two Radax bearings assembled back to back into a single structure. In (*a*) the bearing is shown in perspective, but partly in section, and in (*b*) the complete assembled bearing is shown. In (*c*) a cross-section of the bearing is given. The same parts are lettered alike in the three views. The inner race *a* is solid and has two grooves, or raceways, so laid out that each ball makes contact with it at only one point. There are two separate outer races *b* and *c*, which are also made so that each ball touches them at only one point; hence, each inner and outer raceway, together with their balls, form a two-point bearing. The balls are placed in a manganese-bronze separator *d* made in two halves. The whole bearing is assembled into a single unit by spinning a steel shell *e* over the outer races. After the shell has been spun over, its outside is ground perfectly concentric with the bore of the bearing. It is obvious that this double-row bearing is non-adjustable, although the wear may be taken up by putting in larger balls. The success obtained in practice from this form of bearing is largely due to its non-adjustability.

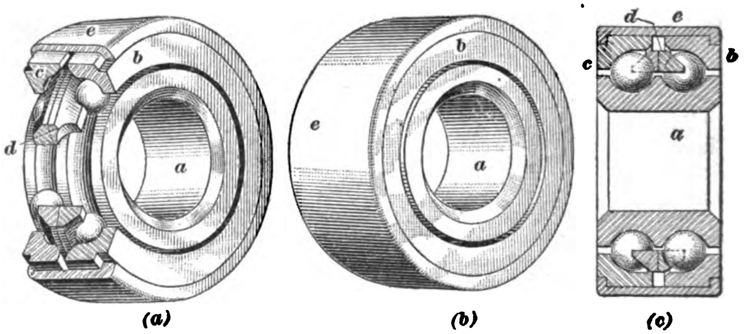

(a) (b) (c)

FIG. 25

New Departure double-row ball bearings are made to the same dimensions, so far as inside and outside diameters are concerned, as standard radial annular ball bearings; they are much wider, however.

BALL THRUST BEARINGS

54. In automobile work are used two forms of ball thrust bearings that may be classified as *plain* and *self-alining thrust bearings*. Either class may belong to the silent or the full type of bearing.

55. A plain ball thrust bearing of the silent type, as made by the Standard Roller Bearing Company, is shown completely disassembled in Fig. 26 (*a*). It consists of two grooved hardened-steel races *a* and *b*, between which is placed the ball cage *c* containing the balls. In the full type, no cage is employed. Both the full and silent types are sometimes assembled with a retaining band *d* around them, as shown in view (*b*), so that the races and balls cannot come apart when the bearing is removed from its place. In the plain ball thrust bearing, careful machining of the seats for the two races is relied on to distribute the thrust load evenly over all the balls; it is evident, however, that the slightest springing of shaft or housing will throw all the load on one or two balls.

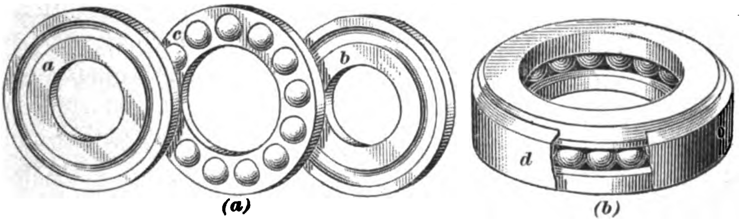

(*a*) (*b*)

FIG. 26

56. Self-alining ball thrust bearings are so constructed that they will automatically adjust themselves in such a manner that the thrust load at all times is carried by all the balls.

Three constructions are in use for making a ball thrust bearing self-alining. In one, shown in Fig. 27 (*a*), a *leveling*, or *radius, washer a* is placed on one side of a plain ball thrust bearing. One side of the radius washer is flat, and the other side is curved, so as to form part of the surface of a sphere. This curved side of the radius washer is placed against a similarly curved seat; hence, the whole bearing can rock slightly to accommodate itself to any disalinement.

In one form of a Hess-Bright self-alining thrust bearing, shown partly in section in (*b*), one race *a* has a flat outer surface and the other race *b*, a curved outer surface forming part of the surface of a sphere whose center is on the center line of the bearing. A radius washer *c* having a curved inner surface and a flat outer surface fits against the race *b*. The balls are set in a cage *d*, this bearing being of the silent type. A retainer band placed on the outside allows the bearing to be readily handled. In (*c*) the two races *a* and *b* and the ball cage *d*, with its balls, are shown separately. The type of self-alining thrust bearing

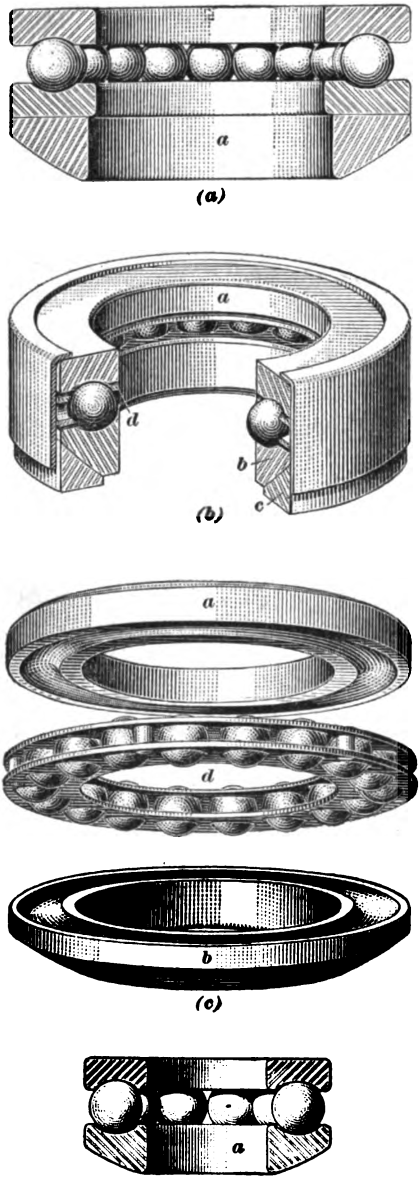

(*d*)
FIG. 27

shown in (*b*) and (*c*) is placed between flat shoulders, or seats, at the point where it is applied.

In (*d*) is shown in cross-section a full type of self-alining thrust bearing, as used occasionally around the pivot pins of steering knuckles. Here, the one race *a* is curved on its outer surface to fit a spherical seat.

All self-alining thrust bearings are made a very loose fit over the shaft they surround.

57. Ball thrust bearings, when employed in automobile work, are found at one or both sides of the differential in rear axles, on the driving pinion shaft of the rear axle, at the clutch releasing collar, in steering knuckles, and in steering gears; in short, they are found wherever a heavy thrust is to be resisted by a rotating member of a car.

Ball thrust bearings are often employed in conjunction with either radial ball bearings or cylindrical roller bearings and in places where both a radial and a thrust load are to be carried by a rotating member. They are not employed as a general rule in conjunction with tapered roller bearings or cup-and-cone type of ball bearings, as both of these classes can carry thrust loads.

BEARINGS AND LUBRICATION

(PART 2)

LUBRICATION

LUBRICANTS

DEFINITIONS

1. Lubrication consists in introducing some substance, either liquid or solid, between two rubbing surfaces, to reduce the friction and the wear that otherwise would occur. No matter how smooth a metallic surface may appear to the sight or to the touch, it is in reality covered with very minute projections or ridges and hollows. These are readily seen under a microscope. Hence, when two clean metallic surfaces are placed together and one is made to slide or roll upon the other, these little ridges engage one another, or interlock, with the result that some of the projections are torn loose from each piece. It is this tearing away or abrading of the metal that causes wear, and the resistance thus offered is known as *friction*.

When a lubricating substance, or *lubricant*, is put between the two surfaces, it fills the little hollows and forms a thin film, or layer, that prevents the metals from actually touching each other except at the points of the highest ridges. As a result there is less wear, as a smaller number of ridges are torn loose, and this means less friction also.

The lubricants used in automobile practice are oils, greases, graphite, mica, French chalk, etc. Oil is a *liquid* lubricant;

grease is a *semiliquid* lubricating substance; graphite, mica, French chalk, etc. are *solid* lubricants.

2. Oil is used for the lubrication of the engine and miscellaneous small bearings outside the engine, it being customary to use an engine oil suitable for the cylinders for the lubrication of all the engine bearings and also for all other small bearings around the car where oil is called for. An oil suitable for cylinder lubrication of gasoline engines is known as a *gas-engine cylinder oil;* cylinder oils suitable for steam engines are utterly unsuited for gasoline engine cylinders, but are often employed to advantage for transmissions and rear axles for lubricating their gears and antifriction bearings. All automobile cylinder oils are of mineral origin, having been distilled from crude oil.

Grease is used for bearings where the pressure due to the load is relatively high, such as the spring shackle bolts, steering-knuckle pivot pins, brake connections, etc. It is also used to lubricate the antifriction bearings of front wheels and of the rear wheels of three-quarter and full-floating rear axles, it being the usual practice to pack the hubs full with a suitable grease. Some quite fluid greases are used for lubricating transmissions and rear axles; the transmission case or differential housing is then partly filled with grease.

Graphite, as well as mica in the powdered form, is mixed with oil or grease to render it more unctuous. Flake graphite is generally considered to be unsuitable for cylinder lubrication, as it does not stay in suspension in oil but settles to the bottom. So-called *deflocculated graphite,* sold under the trade name of *Oildag*, however, is in so finely divided a state that it stays mixed almost indefinitely with gas-engine cylinder oil; this mixture is occasionally used for automobile-engine lubrication. There is also a very finely ground dry graphite on the market that stays mixed with cylinder oil for quite some time. Instead of mixing graphite with the cylinder oil, the graphite may be, and is, introduced occasionally directly into the cylinders, being fed in a finely powdered form into the intake manifold, whence the fresh charges passing through this manifold carry the graphite along to the cylinders.

Dry graphite, French chalk, talc, and soapstone, in powdered form, are used as a lubricant between inner tubes and casings of tires and are applied to rims to prevent tires sticking to them.

AUTOMOBILE-ENGINE CYLINDER OILS

3. There are four properties that a good automobile-engine cylinder oil should possess:

1. It should have as high a fire test as possible; that is, the temperature at which it gives off inflammable vapor should be as high as possible. In the best automobile-engine cylinder oils this temperature will be from 450° F. upwards, which is none too great considering the temperatures to which the oil is subjected when exposed to the burning charge in the cylinder.

2. As the oil is vaporized by the heat, it should leave as little residue as possible. Any cylinder oil will leave some carbon deposit, which gradually accumulates on the inner walls of the combustion chamber and on the piston head and valves, but it is desirable that this accumulation should be prevented as far as practicable. If it becomes thick, especially if the compression is high or if the form of the combustion chamber is such that sharp corners are exposed to the heat of the flame, particles of the unburned carbon clinging to the walls or elsewhere may become heated to such a degree as to ignite the charge spontaneously before compression is complete.

3. The oil must have good lubricating qualities, which may generally be taken to mean that it has sufficient viscosity; in other words, that it is not excessively thin. On the other hand, however, the cylinder oil should not be very thick, else it will not satisfactorily lubricate the bearings of the crank-shaft and connecting-rods.

4. Oil used for lubricating any part on automobiles should contain no acid. The presence of any acid is dangerous to the metal parts, as it attacks and corrodes them. The corroding action of an acid is especially objectionable when ball bearings are used. The surfaces of the balls and the races on which they are run must be exceedingly smooth in order to give good

service. If these surfaces are injured by corrosion, the life of the ball bearings will be greatly shortened.

4. For ordinary water-cooled engines, some engine makers recommend the grade of cylinder oil known as *heavy* for summer use. In weather cold enough to cause this oil to stiffen, the next lighter grade, or *medium*, may be employed. In cold weather it is the custom to use a special oil that will not become too thick at low temperatures. Other engine makers recommend that the same kind of oil be used all the year around. On account of this difference of opinion, it is advisable, when in doubt as to what grade of oil to use, to inquire of the manufacturer of the car or the engine, who usually will be glad to advise what brand of oil he recommends for his engines. This information is also often given in the instruction books furnished by many car manufacturers.

For air-cooled cylinders, only the heaviest oil obtainable and with the highest possible fire test should be used. Many oil refineries make a special oil suitable for air-cooled engines, which is put up in tin cans plainly marked to that effect. Oil suitable for water-cooled engines does not have a sufficiently high fire test to permit its use in air-cooled engine cylinders, where the cylinder temperature is very high.

5. If an automobile-engine cylinder oil is light or thin, more of it must be used than of a heavy oil to accomplish the same result, as the light oil is more easily decomposed by the heat in the cylinder than is the heavy oil. The object is to feed enough oil to insure perfect freedom of running and little wear of the piston and rings. At the same time, it is well to avoid the use of more oil than is necessary, as this will result in the formation of carbon deposits from the burned oil, and a consequent tendency to preignition, clogging of the valves, sooting of the spark plugs, etc. In any case, only a high grade of mineral cylinder oil should be used, as the troubles that follow the use of an inferior oil will more than offset the slight saving in cost.

Some manufacturers of automobiles sell oils, marked with their own labels, that they recommend for use in their engines.

These oils may generally be used with confidence in any engine of about the same character as that for which they are put up.

6. As an example of what are considered suitable oils for automobile engine use, the specifications of the Cadillac Motor Car Company are here quoted:

> For use in winter, oil should have a specific gravity of 30° Baumé or higher, that is, between 30° and 32°; flash test should be 415° F. or higher; fire test should be 470° F. or higher; viscosity should be 90 or higher at 212° F. (Tagliabue viscosimeter); cold test 20° F.
>
> For summer, the oil should have a specific gravity of 29° Baumé or higher; flash test should be 435° F. or higher; fire test should be 480° F. or higher; viscosity should be 100 or higher at 212° F.; cold test should be 30° or higher.
>
> Light, well-filtered oil is preferable. Dark oils usually contain more carbon than light oils.

The Society of Automobile Engineers has drawn up the following specifications for a light automobile-engine oil:

> Oil for this purpose must be a pure mineral oil, no addition or adulterant of any kind being permitted. The following characteristics are desired: specific gravity, 28° to 32° Baumé; flash point, not less than 400° F.; fire test, not less than 450° F.; viscosity at 100° F., Saybolt viscosimeter, not over 300 seconds; viscosity at 210° F., Saybolt viscosimeter, 40 to 50 seconds; viscosity at 210° F., Tagliabue viscosimeter, 60 to 65 seconds; carbon residue, not over .5 per cent.

7. When an oil is heated, a temperature is reached at which the vapors given off can be ignited with a lighted match or any other flame. When these vapors ignite in flashes showing a slight bluish flame, the temperature at which this occurs is the **flash point,** or **flash test,** of the oil. When the oil is heated more, a temperature is reached at which the vapors burn steadily; the temperature at which this occurs is the **fire point,** or **fire test,** of the oil.

The **cold test** of an oil is the temperature at which it will not flow freely from a vessel.

8. The **viscosity** of oils is the degree of fluidity of an oil; it is measured by an instrument called a **viscosimeter.** The two viscosimeters in most common use are the Saybolt and the Tagliabue instruments. Both of these, in conjunction with a stop-watch, give the time required for a certain quantity of oil at a known temperature to flow through a nozzle of a given size.

The Saybolt viscosimeter is used only by the Standard Oil Company, and by nobody else; when it is used it expresses the viscosity by the number of seconds it takes 60 cubic centimeters (3.66 cubic inches) of the oil to pass through the measuring nozzle of the instrument. Thus, if it takes 45 seconds to discharge 60 cubic centimeters of oil having a temperature of 210° F., the viscosity is *45 at 210° F. on the Saybolt instrument.*

The Tagliabue viscosimeter is used by independent oil refiners. The viscosity of oil tested by it is indicated, in practice, in two ways. In the one case, the viscosity is taken as twice the number of seconds it takes 50 cubic centimeters (3.05 cubic inches) to pass through the measuring nozzle; thus, if a sample of oil tested at 210° F. takes 45 seconds to pass 50 cubic centimeters through the nozzle, the viscosity is *90 at 210° F. on the Tagliabue instrument.* In the other case, the viscosity is expressed directly as the number of seconds it takes 50 cubic centimeters to pass the nozzle; thus, taking the same case as before, the viscosity is *45 seconds at 210° F. on the Tagliabue instrument.*

The different viscosimeters in use do not register viscosity alike; consequently, when the viscosity of an oil is given, it must be known with what instrument it was measured.

9. There are no simple tests by which an automobile owner or driver can determine for himself whether or not oil that has been or is to be purchased is of a high grade or not. In practice, the recommendation of the manufacturers is generally followed to advantage; in the absence of that, the quality of an oil can usually be gauged quite accurately by its price. If the price of a cylinder oil is abnormally low in comparison with what is asked for well-known standard brands of oil, the quality of that oil, as a general rule, is also low.

AUTOMOBILE GREASES

10. The greases used in automobile work are made in different consistencies to suit different climatic conditions and service. As a general rule, each brand of grease is made in three consistencies, often known as *hard*, *medium*, and *light grease*, although some makers manufacture five consistencies and give each an identification number. A distinction is usually made between *cup greases*, which are intended to be used in compression grease cups, and *transmission greases*, which are often called *non-fluid oils*. Transmission greases are very soft and fluid and, as implied by their name, are intended to be used in automobile transmissions and rear-axle housings to furnish a suitable lubricant for their gears and bearings; they are entirely too fluid to be used in grease cups.

The viscosity of many cup greases is greatly affected by the temperature to which they are subjected, the greases becoming more fluid as the temperature rises and less fluid as it becomes lower. With such greases, a hard grade should be employed in summer, a medium grade in the spring and fall of the year, and a light grade in winter, in order that the grease may be fed freely from the grease cups. Some cup greases are affected but little by temperature changes, and then the same grade may be used all the year around.

Greases are manufactured in different consistencies, not only to suit different climatic conditions, but chiefly to suit different pressures on the bearings they lubricate. A hard grease is suitable for high pressures and a light grease for low pressures.

11. Flake graphite, and also ground mica, are sometimes added to greases to increase their lubricating qualities. Graphite greases are made in various consistencies and are quite frequently employed for grease cups; mica greases are seldom used in automobile work. A graphite grease mixed with cedar sawdust is sometimes employed in sliding-gear transmissions that have become unduly noisy from abnormal wear of the gears; the sawdust seems to act as a cushion between the teeth, deadening the noise. As in the better grade of modern cars the wear of gear-teeth and transmission bearings is quite slight, the use of combined grease and sawdust in transmissions is uncommon at present.

The use of grease in transmissions and rear axles is not as common now as formerly, many automobile manufacturers recommending the use of a heavy, steam-engine cylinder oil instead. Ordinary, cheap, steam-engine cylinder oil is of little value as a lubricant for transmissions and rear axles; best results are usually obtained from a cylinder oil suitable for superheated steam and having a fire test of about 600° F.

12. Some transmission greases are of a fibrous nature and cling to the gears with great tenacity; better results are usually obtained from such greases than from greases that are so fluid that they will drip at once from the gears. Greases that are so heavy that the gears simply cut a path through them are of no value in transmissions, etc.; by mixing them with gas-engine cylinder oil, however, their consistency can often be reduced so that they will give satisfactory service. A transmission grease that is too light to cling to the gear-teeth can be thickened by mixing it very thoroughly with a sufficient quantity of heavy cup grease. As a general rule, however, it will be more satisfactory to use a transmission grease of the right consistency than to attempt to obtain it by mixing as just described.

ENGINE LUBRICATION SYSTEMS

CLASSIFICATION

13. The many different systems by which the moving parts of automobile engines are supplied constantly with oil while the engine is at work can be broadly divided into *splash lubrication systems*, *pressure-feed lubrication systems*, and *combined splash-and-pressure-feed lubrication systems.*

14. In a **splash lubrication system,** the lower part of the crank-case contains cylinder oil into which the lower end of the connecting-rods dip at every revolution, churning the oil into a dense mist and throwing it all over the internal surfaces of the engine. There are three general divisions of this lubrication system in existence.

The simplest one is the *variable-level splash system.* In this, oil is poured periodically by hand into the lower crank-case, and consequently the oil level is continually changing between fillings. Owing to the constant attention required this system is now obsolete.

The second general division is known as the *automatic constant-level splash system.* As implied by the name, the supply of oil into which the connecting-rods dip is maintained automatically at a constant, or virtually constant, level by oil taken from a separate oil reservoir, which most commonly is incorporated in the crank-case.

The third general division is known as the *self-adjusting level splash system.* In this system, as usually carried out in practice, oil is continually pumped into movable troughs under the connecting-rods, the troughs being interconnected with the throttle valve in such a manner as to bring the oil closer to the connecting-rods when the throttle valve is opened.

15. The constant-level splash system is divided into three general classes, in accordance with the manner in which the oil is kept at a constant level. The first class is known as the *vacuum-feed constant-level splash system.* In this, the oil is contained in an air-tight reservoir located so that its bottom is higher than the crank-case oil level. A slight vacuum exists above the oil in the reservoir, which is partly decreased whenever the oil level in the crank-case drops a certain amount, thus permitting oil to flow from the reservoir to the crank-case, until the sealing of the outflow pipes arrests the flow of oil from the reservoir. This system has been used in numerous E. M. F., Flanders, and Studebaker cars, and gives good results when care is taken to have the oil reservoir air-tight.

The second class is known as the *circulating constant-level splash system.* In this, the oil is transferred from a reservoir, in much larger quantities than is needed, into troughs placed beneath the connecting-rods, from which troughs the oil overflows back to the reservoir, whence it is sent back to the troughs again. The oil is thus continually circulated. In some circulating constant-level splash systems, individual troughs are used, one being placed under each connecting-rod; the oil reservoir is then in the bottom of the crank-case and is open at the top. In other systems, the oil reservoir, when in the bottom of the crank-case, is closed on top by a horizontal partition in which the troughs are formed, each trough having an overflow through which surplus oil flows back to the reservoir.

The third class of splash lubrication system is spoken of as the *non-circulating constant-level system*. In this system, oil is taken from a reservoir by a pump and delivered, in the right quantity, to troughs into which the ends of the connecting-rods dip. The oil reservoir may form part of the crank-case or be entirely separate from it; the delivery of the pump is usually adjustable, and fresh oil is delivered to the splash troughs at all times, in which respect this system differs from the circulating system.

16. In a **pressure-feed lubrication system,** as implied by the name, the oil is supplied to the rubbing surfaces under pressure. In the strictest sense, the oil would be supplied to all rubbing surfaces under pressure; as carried out, however, oil under pressure is usually supplied only to the crank-shaft main bearings, crankpins, wristpins, and timing gearing. The oil thrown off from the crank-pins is usually relied upon to lubricate the cam-shafts, cylinders, and other rubbing surfaces.

Pressure-feed lubrication systems are divided into two classes, the first one of which may be called a *low-pressure lubrication system*. In one subdivision of this class, oil lying in the bottom of the crank-case is pumped continually into an elevated tank, whence it flows under the low pressure due to the elevation of the tank through individual pipes to the various bearings, whence it drains to the bottom of the crank-case and is pumped back again to the tank. This is also known as the *De Dion oiling system*, and was used for a long time, among others, on the engines of the Pierce-Arrow cars. In another subdivision, no pump is employed. The oil is contained in an elevated tank and passes through adjustable sight-feeds and individual pipes to the various bearings, in some cases only under the influence of gravity, but in others under a slight pressure derived by connecting the top of the oil tank with the exhaust pipe of the engine; the used oil is not returned to the tank. In yet another subdivision, used in some models of the Hupmobile car, the flywheel of the engine dips into oil in the reservoir and carries it to an elevated point, whence the oil flows, partly by gravity and partly by pressure due to centrifugal force, to the bearings and cylinders.

In the *high-pressure lubrication system*, oil is taken from a reservoir, usually in the bottom of the crank-case, and delivered by a pump or pumps under pressure ranging from 3 to 15 pounds per square inch to the various bearings; in racing cars much greater oil pressures are often used. In present-day practice, a single pump is employed, which discharges into a manifold from which branch pipes lead to the various bearings; individual pumps for each bearing have been employed, however, in many cars.

17. In **combined splash-and-pressure feed lubrication systems,** many different combinations of the various forms of splash and pressure systems are possible and have been used. A common form employs pressure feed to the main crank-shaft bearings, the overflow from these bearings flowing into troughs below the connecting-rods, from which the crankpins, wristpins, cylinders, etc. are lubricated by splash lubrication. In another system, oil is supplied only to the cylinders under pressure; all the bearings are lubricated by the splash system. Other combinations than those enumerated here may be used.

SPLASH LUBRICATION SYSTEMS

18. In Fig. 1 there is shown, partly in section, the crankcase *a* and oil reservoir *b* of the engine used in the Studebaker "20" car, in which a vacuum-feed, constant-level splash lubrication system is employed. The oil reservoir is filled through a removable cap *c*; the bottom of the reservoir is

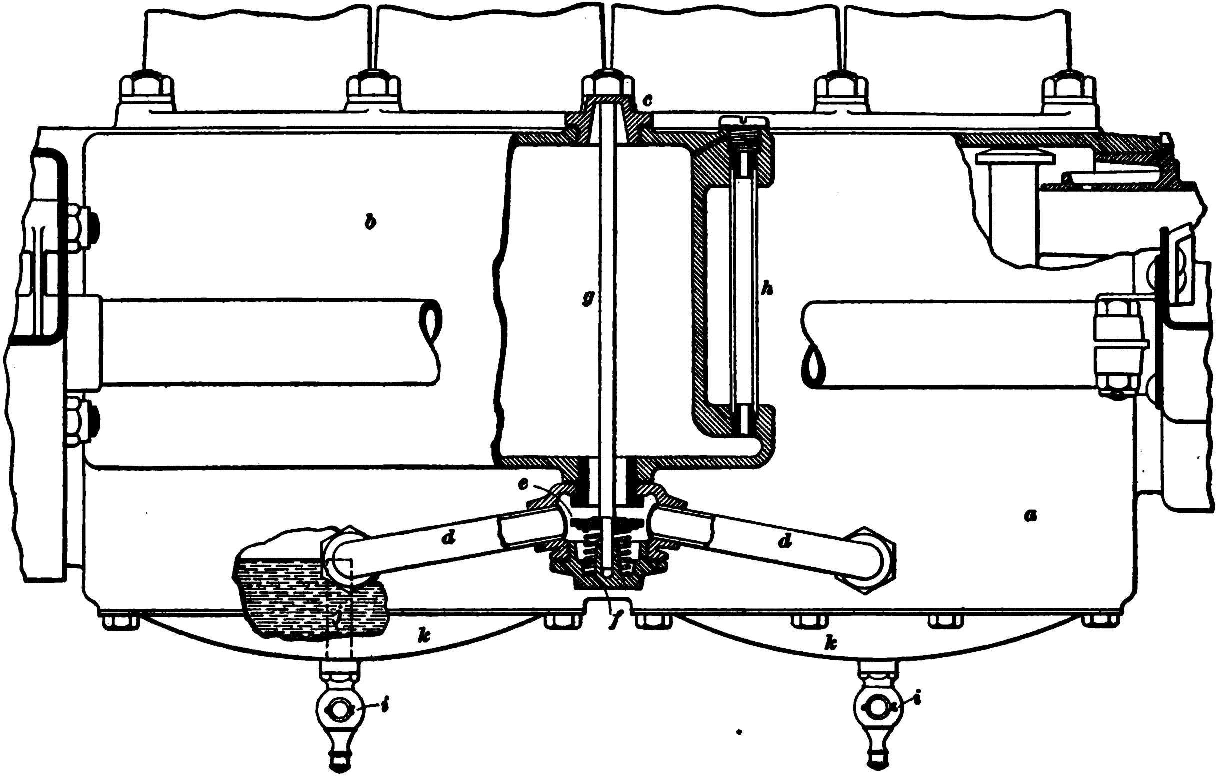

Fig. 1

connected by two pipes *d* to points near the bottom of the crank-case. A check-valve *e* fitted with a spring *f* on its under side, and a long stem *g* is raised by its spring when the cap *c* is unscrewed from the reservoir, and thus shuts off the reservoir from the crank-case while the former is being filled with oil. The act of replacing the cap *c* opens the check-valve *e*. The oil reservoir is fitted with a gauge glass *h*, which shows the height of oil in the reservoir.

The action of the vacuum feed is as follows: Normally, with the engine at rest, oil has flowed from the reservoir *b* into the two compartments of the crank-case until the oil level just covers the outlets of the pipes *d*. The oil reservoir being air-tight, a partial vacuum is formed above the oil in this reservoir through the oil flowing therefrom. As soon as the outflowing oil covers the outlets of the pipes *d*, the flow of oil from the reservoir stops, the partial vacuum above the oil now being great enough to prevent oil from flowing from the reservoir. When the engine is started, the connecting-rods dip into the oil in the two compartments of the crank-case, there being one oil compartment for each two cylinders, and splash oil all over the inside of the engine. Consequently, the oil level in the two compartments falls below the outlets of the pipes *d*, and air will bubble through the oil in these pipes and the oil in the reservoir to the upper part of the latter, thereby lowering the vacuum until the pressure of the atmosphere is insufficient to hold the oil back. Oil now flows into the crank-case compartments until the outlet ends of the pipes are sealed once more, when the flow of oil from the reservoir stops again. This cycle of operations is repeated over and over again, whenever the oil level in the crank-case falls below the outlets of the oil pipes *d*.

As the operation of the vacuum feed depends entirely on the maintenance of a vacuum in the reservoir, the greatest of care must be exercised to have the filler cap and also the gauge glass fittings make air-tight joints.

Two drain cocks *i* with extension pipes *j* are used for bringing the oil to its proper level, which is even with the open end of the extension pipes. If it is desired to entirely drain the two oil

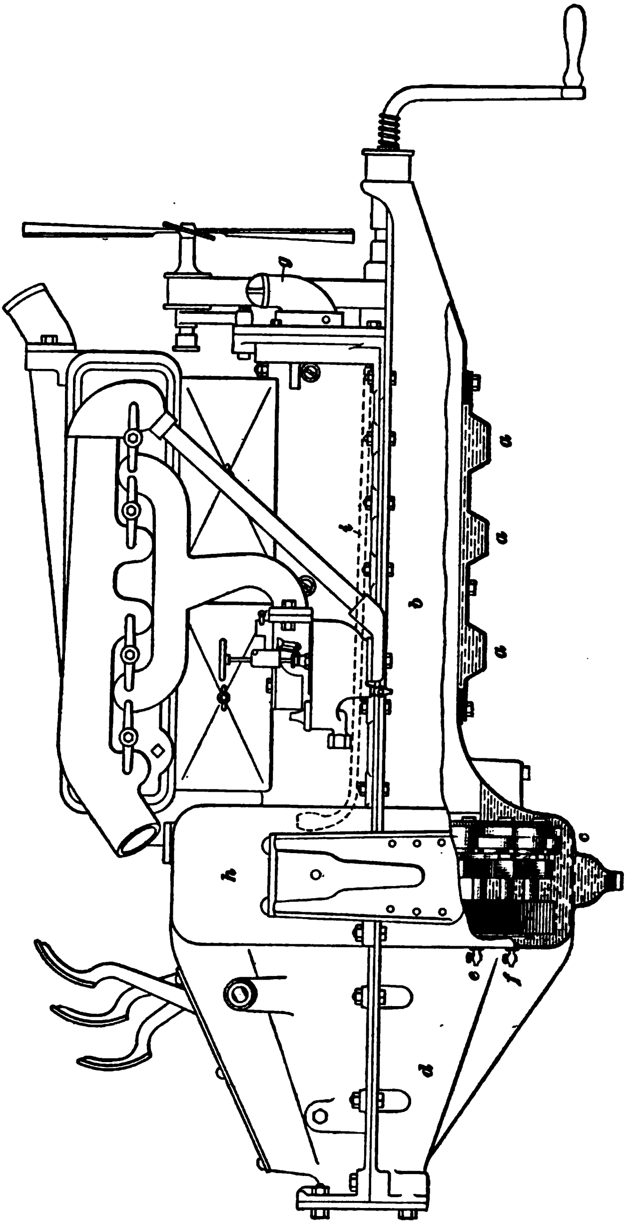

FIG. 2

compartments, the two cocks with their extension pipes must be completely unscrewed from the bottom covers *k* of the oil compartments.

19. The oiling system used in the engine of the Ford, model T, automobile is the simplest form of a circulating constant-level splash system, and is characterized by the absence of a pump for circulating the oil; it is shown in Fig. 2. There are three troughs *a* formed in a removable plate at the bottom of the crank-case *b*; in the earlier model T engine these troughs were formed directly in the crank-case. The connecting-rods of the first, second, and third cylinders dip into oil with which these troughs are continually being filled, splashing this over the cylinders and bearings. To the rear of the lower crank-case *b* is the lower flywheel and magneto housing *c*, and to the rear of this the lower clutch and transmission housing *d*, both of which are in one piece with the lower crank-case. The lower housing *c* forms the oil reservoir, which is supposed to be filled with oil to the level of the upper gauge cock *e*, and to be refilled as soon as the oil level has dropped below the level of the lower gauge cock *f*. This oil reservoir is filled by pouring oil through the crank-case breather pipe *g*, whence it flows along the bottom of the crank-case *b* to the reservoir *c*. The cap shown covering the breather pipe has openings in it communicating with the atmosphere; these openings cannot be seen in the illustration. The flywheel, with the horseshoe-shaped magnets of the magneto that are attached to it, dips into the oil in the housing *c*, and when the engine is running throws oil into the upper flywheel housing *h*. Some of the oil drops by gravity into the funnel-shaped opening of the oil circulation pipe *i*, shown in dotted lines, which leads to the timing gears at the forward end of the engine, whence it drops to the forward end of the lower crank-case and in flowing back to the reservoir *c* keeps the three troughs *a* filled. The fourth cylinder, together with its working parts, is lubricated by splash directly from the reservoir *c*. Some of the oil thrown into the upper flywheel housing *h* flows to the rear, oiling the transmission and universal

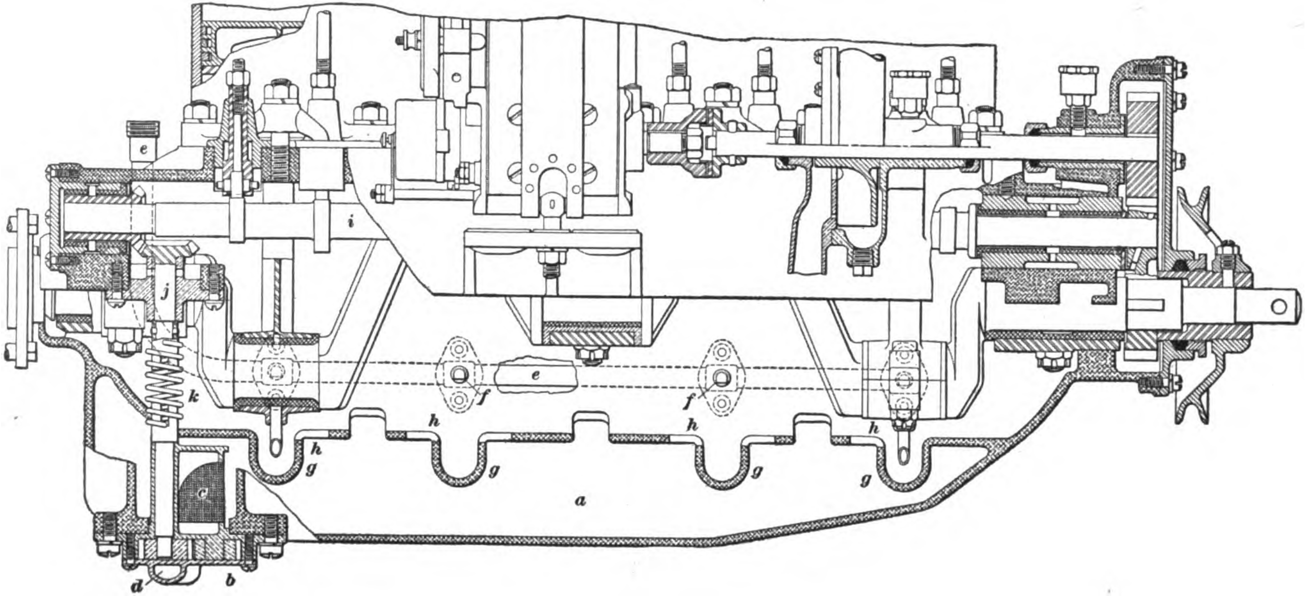

FIG. 3

joint of the driving shaft, returning along the sloping bottom of the transmission housing *d* to the reservoir *c*.

20. The circulating constant-level splash oiling system used in the engines of some Buick automobiles is shown in Fig. 3. In this lubrication system, a gear-pump is employed for circulating the oil. The oil reservoir *a* is formed in the lower crank-case and has fitted to it, at its rear end, the oil pump *b*. The oil in the reservoir flows to the oil pump through a screen *c*, whereby it is strained, and is pumped through a pipe (not shown) connected to the passage *d* of the oil pump to a sight feed and then flows through the pipe *e*, which is on the outside of the left side of the crank-case, and four nozzles *f*, to the four oil troughs *g*. These oil troughs are formed in a horizontal partition and are located directly beneath the connecting-rods. The oil in the troughs is kept at a constant level by the oil pump delivering a larger quantity than is needed; the excess oil overflows the troughs through the openings *h* and drains back into the reservoir *a* to be circulated again. The oil pump in this case is driven from the engine cam-shaft *i* by bevel gears. The driving shaft *j* of the oil pump is made in two parts that are connected by a helical spring *k*, which acts as a universal joint and hence takes care of any lack of alinement between the two parts of the shaft. The driving shaft is made in two parts to permit quick and easy removal of the oil pump. The timing gears are lubricated by splash from the crank-case.

21. In Fig. 4 is shown the circulating constant-level splash lubrication system used in the engine of the model 35 Studebaker car. The system here shown differs from that used in the Buick engine, and described in Art. **20**, in that a plunger pump is used instead of a gear-pump and, further, in that a separate oil lead keeps the timing and magneto gears flooded with oil. Another point of difference is that the pump sprays oil directly on the lower ends of the connecting-rods, instead of delivering the oil into the troughs under them. Referring to the illustration, the oil reservoir *a* is in the base of the lower crank-case *b*, and the four oil troughs *c* are in a horizontal partition in the lower crank-case. Overflow holes are provided alongside of each trough, through which all excess oil drains back to the oil reservoir. The plunger pump *d* is operated by an eccentric on the cam-shaft, and takes its oil supply through the pipe *e* from the bottom of the oil gauge *f*, which shows the height of the oil in the reservoir. The pump has two oil delivery pipes; the pipe *g* leads to the sight-feed glass *h* on the dashboard of the car, whence the oil flows by gravity through the pipe *i* to the magneto driving gears and timing gears. The second oil delivery pipe *j* connects to an oil distributing pipe placed horizontally inside of the crank-case and which has four holes *k* in line with the crankpins; the oil is squirted under pressure over the crankpin bearings. All excess oil drains back to the four troughs, into which dip splashers at the end of the connecting-rods.

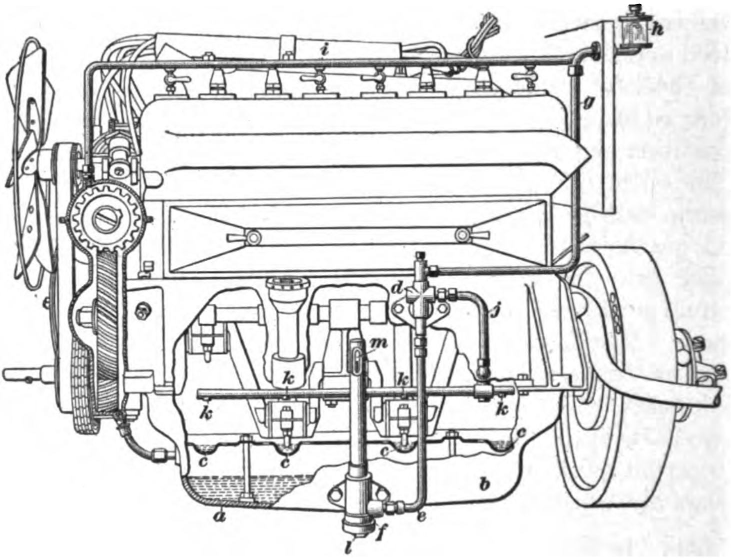

FIG. 4

22. In some circulating constant-level splash systems, oil is pumped to one or more bearings in addition to, perhaps, the timing gearing and other bearings, but the oil does not circulate through these bearings under pressure, and hence such systems are not classified as combined pressure-feed and splash systems. Sometimes more than one oil pump is used; thus in the Continental, model C engines, two plunger oil pumps are fitted, one of which pumps oil over the timing gears; whence it flows to the two forward splash troughs, while the second pumps oil to the rear main crank-shaft bearing, whence the oil flows to the two rear splash troughs. In Rutenber engines, the oil is forced by a single pump of the gear-type into

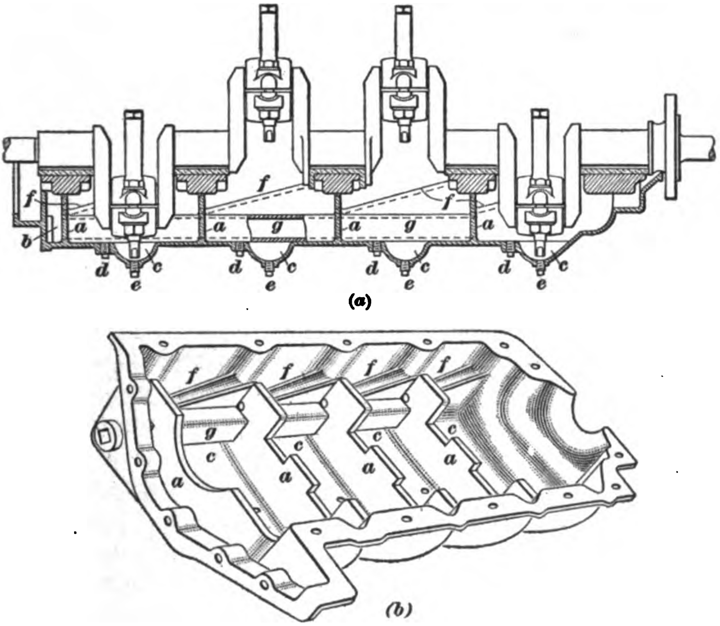

(a)

(b)

Fig. 5

a distributing pipe having holes that direct streams of oil to all the crank-shaft bearings, the oil draining to splash troughs and through overflow openings back to the reservoir in the bottom of the lower crank-case, whence it is circulated again. The oil does not pass into and through any bearings under pressure, however, but is merely directed to them in a positive manner. Splashers at the lower end of the connecting-rods dip into the splash troughs, splashing oil all over the inside of the engine.

23. A non-circulating, constant-level splash lubrication system is used in the four-cylinder engine of the Cadillac cars, in the four- and six-cylinder Northway engines, and in others. In Fig. 5 (*a*), a cross-sectional view of the lower crank-case and part of the upper crank-case of the Cadillac engine, with the crank-shaft and part of the connecting-rod in position, is shown. View (*b*) is a perspective of the lower crank-case removed from the engine. Like parts are lettered the same in both views, and both illustrations should be referred to in reading the description. The lower crank-case is divided by four partitions *a* into four compartments, one beneath each connecting-rod; at the front of the crank-case is a fifth compartment *b* which may be called the *oil equalizing well.* Splash troughs *c*, into which scoops at the lower ends of the connecting-rods dip, are formed in the bottom of the crank-case. These splash troughs are supposed to be practically full while the engine is at rest; any excess oil can be drained off by removing the drain plugs *d*. The splash troughs themselves can be drained by taking out the drain plugs *e*. On the right-hand side of the upper crank-case, and cast integral with it, is an oil reservoir fitted with two plunger pumps. One of the oil pumps forces oil from the reservoir to a sight-feed glass on the dashboard, whence the oil flows by gravity to the suction side of the second oil pump, which pumps the oil into a distributing pipe that supplies the lower crank-case with oil.

The four partitions *a* act as baffle plates that prevent the oil in the lower crank-case from flowing forwards or rearwards in a body and piling up at the front or rear end of the crank-case when the car is descending or ascending a hill. To prevent the oil in the crank-case from gradually piling up in the front or rear compartment, an automatic oil equalizing system is fitted, which consists of four troughs *f* sloping downwards and forwards, and an equalizing passage *g* that connects the oil-equalizing well *b* with the rear compartment. The sloping troughs *f* are on the right-hand side of the crank-case, and the lower end of each of these troughs opens into the oil compartment just forwards of it; thus, the sloping trough in the oil compartment nearest the front connects to the oil-equalizing well *b*. The excess oil thrown up by the connecting-rods drains down the right-hand side of the crank-case into the sloping troughs *f*, and thus gradually travels from the rear compartment to the front compartment and thence to the oil-equalizing well *b*, whence it flows through the equalizing passage *g* to the rear compartment again. The oil is thus prevented from piling up in front.

While the oil circulates from one compartment to the other in this system just described, it is not a circulating system, there being no oil returned to the reservoir. The pumps only handle enough oil to compensate for the oil used and they always handle clean oil.

24. When six-cylinder engines are fitted with a non-circulating constant-level splash lubrication system and inclined troughs are used for circulating the oil from one compartment to the other, the troughs of the first three oil compartments may slope forwards and those of the last three oil compartments slope rearwards. An equalizing passage will then lead from the first compartment of the crank-case to the fourth oil compartment, and another equalizing passage from the sixth compartment of the crank-case forwards to the third oil compartment. This system is used in some six-cylinder Northway motors.

Some engines using the non-circulating constant-level splash oiling system use only one oil pump, which usually discharges into a sight-feed glass on the dashboard or cowlboard; the oil then flows to the splash troughs by gravity.

25. An example of a self-adjusting-level splash lubrication system is found in the engine of the model 72 Lozier car. A top view of the crank-case of this engine is shown in Fig. 6 (*a*); in (*b*), a part sectional side view of the same crank-case is presented; and in (*c*), (*d*), and (*e*), one of the oil troughs is shown in section in several positions and to a greatly enlarged scale.

The bottom of the lower crank-case forms an oil reservoir *a* that is almost entirely closed on top by a horizontal partition *b*, which contains an oil gutter *c* along which all excess oil coming from the oil troughs *d* flows back to the rear of the reservoir.

The six oil troughs *d*, into which scoops on the ends of the connecting-rods dip, are located above the partition *b*, and are hung on trunnions *e* at the right and left of the crank-case, on which they can rock to and fro. Each oil trough has a crank-arm *f*; the six crank-arms are all pivoted to a bar *g*, which in turn is connected to the foot throttle lever, or accelerator, so that any motion of the carbureter throttle, either by the hand throttle lever or the accelerator, moves the bar *g* forwards or backwards, thus turning each trough a corresponding amount. A gear-pump, which is not shown, forces oil in large quantities through the stand pipes *h* into the several oil troughs, which

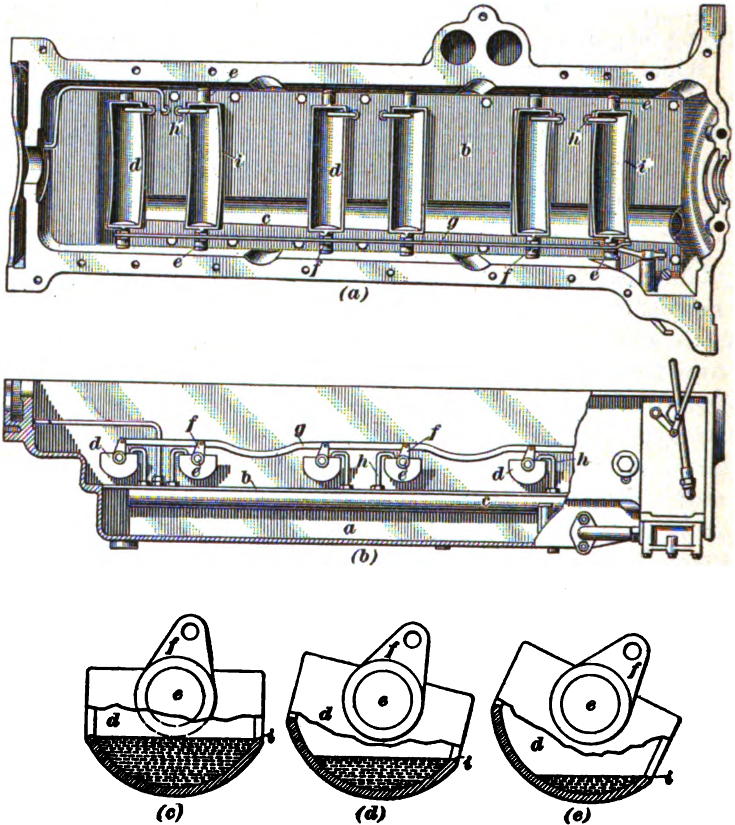

FIG. 6

are thus kept continually filled, the oil overflowing the troughs and returning to the reservoir.

With the throttle wide open, the engine is under a heavy load and should receive the most oil; under this condition, the oil troughs are in the position shown in (*c*), where they contain the greatest quantity of oil. With the throttle moved to its half-open position, the load is lighter and less oil is required; the partial closing of the throttle has tilted the six troughs to the position shown in (*d*). In tilting the troughs, the oil therein overflows the lower edge *i* of the troughs until the oil level is at this edge. The oil level now is farther away from the crank-shaft, and consequently the scoops on the ends of the connecting-rods do not dip so far into the oil in the troughs, and hence less oil is splashed to the working parts of the engine. Still less oil is splashed when the throttle is almost entirely closed, when the troughs are in the position shown in (*e*).

26. A number of the Knight sleeve-valve engines used in various cars employ an adjustable-level oiling system with tilting oil troughs. The oil troughs are not tilted sidewise, however, as in the Lozier engine, but are tilted endwise; or in other words, they are brought bodily nearer to the crank-shaft when more oil is needed. The troughs are connected to the accelerator.

PRESSURE-FEED LUBRICATION SYSTEMS

27. Low-Pressure Lubrication Systems.—The several forms of lubrication systems in which oil from an elevated tank separate from the engine is discharged under a very low pressure to the bearings, are now little used. As an example of such a lubrication system, that used for a number of years on the Pierce-Arrow car engines is shown in Fig. 7. An oil-pump *a* of the gear-type draws oil from the bottom of the crank-case *b* and discharges it through a pipe into the oil reservoir *c*, which is made from sheet brass. This reservoir is located to one side and slightly above the cylinders; its nearness to the cylinders insures that the oil remains fluid even in the coldest weather. From the bottom of the oil reservoir, seven oil pipes *d*

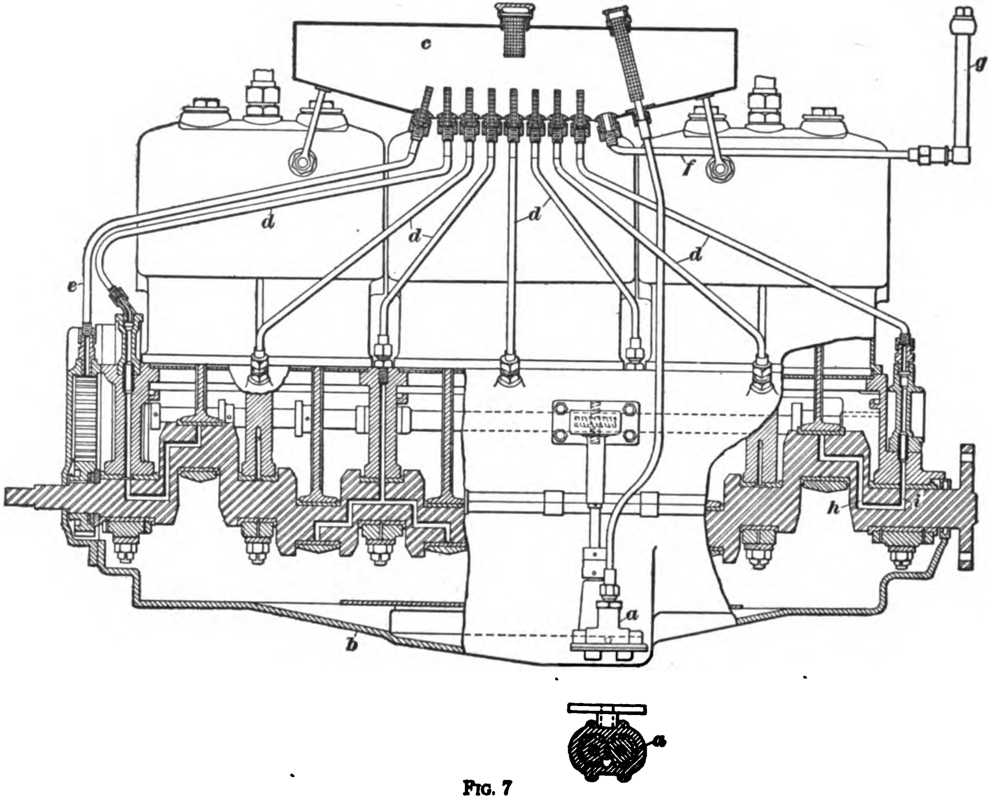

FIG. 7

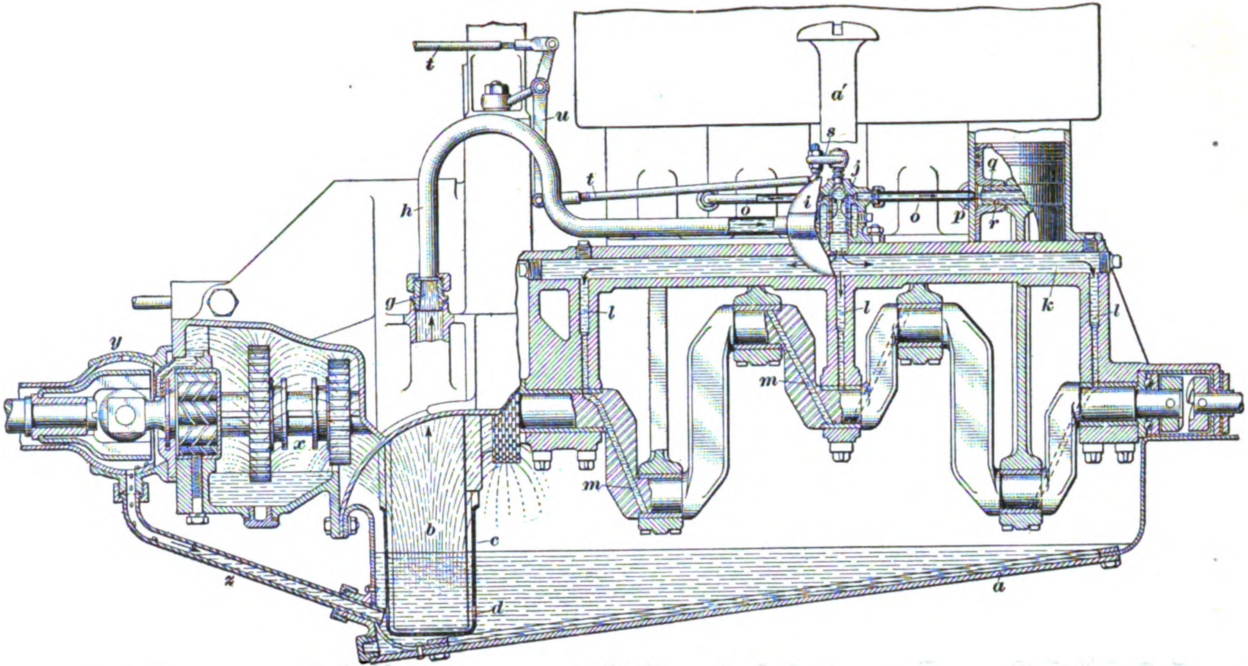

FIG. 8

lead to the seven main bearings of the crank-shaft, the engine shown having six cylinders; an eighth oil pipe *e* leads to the timing gears, and a ninth oil pipe *f* leads to a gauge *g* on the dashboard, which shows the amount of oil in the reservoir. With the engine standing, the reservoir empties itself very quickly, the oil draining back into the bottom of the crank-case; after running a few minutes, however, the pump when in order will partly fill the reservoir and the gauge *g* will show oil, and thereby indicate the proper working of the oil pump. The oil flows to the main bearings and timer gears only under the pressure due to the elevation of the oil reservoir, and is conveyed from the main bearings to the crankpins through passages *h* drilled in the crank-shaft. The oil enters the crank-shaft through a radial hole *i* in the journals, registering once at each revolution with a radial hole in the main bearing brasses, to which holes the oil pipes *d* are connected.

Each oil pipe is fitted with a removable wire gauze strainer. The oil thrown off from the crankpins is depended on to lubricate the cylinders, pistons, piston pins, cam-shaft bearings, cams, valve lifters, and other parts inside the crank-case. The bottom of the oil reservoir slopes upwards at an angle of 25° at the front and rear; this insures that the oil level over all the inlets of the oil pipes will be practically equal, irrespective of the grade of the road.

28. The low-pressure engine oiling system of the "32" Hupmobile car is shown in Figs. 8 and 9, Fig. 8 being a right-hand side view of the unit power plant, partly in section, and Fig. 9 a cross-section taken between the second and third cylinders, looking toward the rear, with part of the third cylinder broken away, and in some respects drawn in a conventional manner. The same parts are lettered alike in both illustrations, and both should be referred to in reading the description. The lower crank-case *a* is constructed so that its bottom slopes to the rear, and its lower part serves as an oil reservoir, which is normally filled with oil to the level shown. On a level road, the ends of the connecting-rods do not dip into the oil, but on steep descents the first connecting-rod may do so, although the resulting splashing of the oil is not depended on in any way to assist lubrication. The lower part of the flywheel *b* is enclosed in a closely fitting oil pan *c* made from sheet metal, to which the oil in the reservoir has access through the holes *d*. As the flywheel revolves in the direction of the arrow *e*, some of the oil adheres to the flywheel rim and is carried around with it. On the right-hand side of the upper crank-case and where it

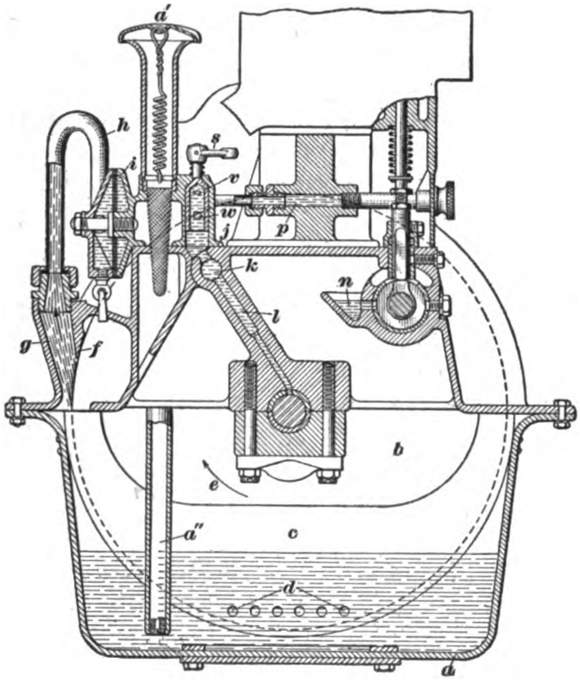

FIG. 9

surrounds the flywheel, a horizontal rib *f* is formed, which is machined so as to just clear the flywheel rim. This rib *f* scrapes off most of the oil from the flywheel rim and forces it to enter the passage *g*, from which an oil pipe *h* conveys it to a strainer *i*; the oil passes from the strainer to a regulating valve *j* and thence into a horizontal passage *k*, from which it passes to the three main bearings through passages *l*. Diagonal holes *m* leading to the crankpins are drilled in the crank-shaft so as to register once each revolution with the passages *l*. The main bearings and crankpins are thus lubricated under a slight pressure, and the oil spray thrown off from the bearings is depended on ordinarily to oil the cylinders, piston pins, valve lifters, cam-shaft, etc. The cam-shaft bearings are oiled by oil thrown off the connecting-rods and main bearings and caught in oil pockets *n* formed in the upper crank-case.

Two oil pipes *o* lead from the regulating valve *j* to passages *p*, one being between the first and second cylinders, and the other between the third and fourth cylinders. The two passages *p* open into the four cylinders and are so located that with the pistons near the bottom of their stroke, they register with a wide groove turned in the pistons at the piston pins. The oil coming through the passages *p* thus can flow around the piston and also into the hollow piston pins *q*, and, through the holes *r* in them, lubricate their bearings in the piston. In this particular engine the piston pin is rigidly attached to the connecting-rod, and is loose in the piston.

29. The regulating valve *j* is in the form of a hollow cylinder closed at one end and carrying a crank-arm *s*, which is connected to the accelerator pedal by rods *t* and a lever *u*; any movement of the accelerator, and hence of the throttle, partly rotates the regulating valve in its casing. The regulating valve has ports *v* and *w* in it, which come into register with similar ports in its casing. The ports *v* connect with the oil pipes *o* and passages *p* leading to the cylinder; the ports *w* connect with the oil passage *k*, from which the oil flows to all the crank-shaft bearings.

The object of the regulating valve is to supply oil in proportion to the load on the engine. It is connected to the accelerator in such a manner that when the throttle is about one-quarter open, the ports *w* in the regulating valve begin to open the ports in the casing of the valve, and oil begins to flow into the passage *k*. As the throttle is opened farther, the ports *w* open farther, and more oil passes into the passage *k*. When the throttle is about half open, the ports *v* begin to open the corresponding ports of the casing, and oil now flows to the oil pipes *o* and passages *p* and thence to the pistons and piston pins.

The transmission *x* and universal joint *y* run in oil that is thrown up by the flywheel against the upper flywheel casing and trickles down the upper transmission casing. All excess oil drains back from the universal-joint housing to the oil reservoir through the pipe *z*. The oil supply in the oil reservoir is replenished through the breather pipe a'; an oil gauge inside the tube a'' indicates the oil level in the reservoir.

30. High-Pressure Lubrication Systems.—Several American cars employ a pressure-feed oiling system in which the oil under quite a high pressure is delivered to the various crank-shaft bearings, and the oil thrown off these bearings in the form of a fine mist is relied on to lubricate the cylinders and various minor parts of the engine. Among the cars employing this system may be mentioned the Marmon car and late models of the Pierce-Arrow automobile.

The pressure-feed lubrication system of the Pierce-Arrow engine is shown in Fig. 10. The bottom of the lower crank-case forms an oil reservoir *a*, from which the oil is taken through a strainer by an oil pump *b* of the gear-type and discharged through the pipe *c* into a second oil strainer *d*, from which the oil passes through a pipe *e* into a distributing manifold *f*. This manifold, through distributing pipes, is connected to the forward bearing *g*, the middle bearing *h*, and the rear bearing *i* of the crank-shaft, which in the engine shown has seven main bearings. A pipe *j* leads from the manifold *f* to the timing gears *k*, and a pipe *l* leads to a pressure gauge *m* placed on the dashboard. The crank-shaft is drilled with radial holes *n* and axial holes *o* through the various journals; holes *p* in the crank-webs connect the axial holes *o*. From each crankpin end of the connecting-rods an oil tube *q* leads to the piston pins *r*. The excess oil drains back to the oil reservoir and is pumped back to the oil-distributing system. The oil reservoir is supposed to be kept filled to the level of the test cock *s*; it is filled through the funnel *t* and drained through the drain cock *u*.

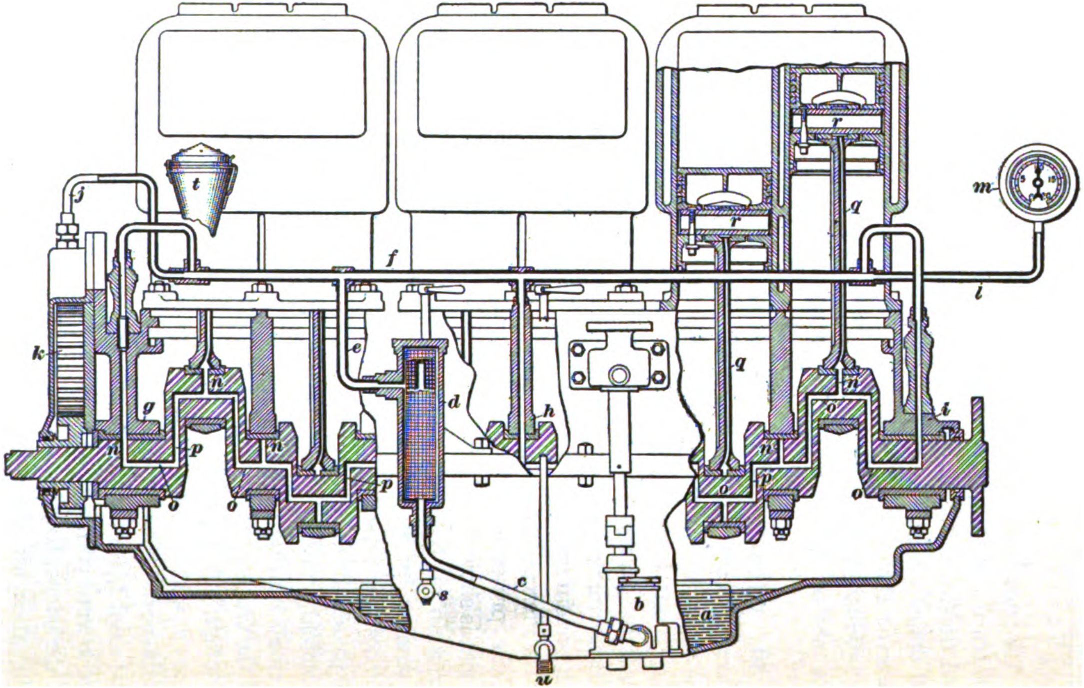

FIG. 10

31. In most pressure-feed lubrication systems of the high-pressure type and using a single pump, a *relief valve* is fitted; this valve can be adjusted by hand to any pressure that will produce satisfactory lubrication. Thus, if the engine smokes continually it is getting too much oil; the obvious remedy is to reduce the pressure in the oiling system until smoking ceases, which is done by adjusting the relief valve to open at a lower pressure. The relief valve acts by discharging some oil from the delivery side of the oil pump back to the suction side. In high-pressure lubrication systems in which an individual pump is used for each oil pipe, no relief valve is needed, as the delivery of each pump is made adjustable; this system is now quite rare in American practice.

COMBINED SPLASH AND PRESSURE-FEED LUBRICATION SYSTEM

32. Lubrication systems making use of both splash and pressure feed were very popular at one time, but have been largely superseded by the constant-level splash system. Where a combination system is used, many different combinations are possible. Thus, in the model 69 Overland car, a pressure-feed system is employed for the cylinders and timing gears, and splash lubrication is used for the crank-shaft and cam-shaft bearings and all other parts inside the engine. In the engines of many Stevens-Duryea cars, pressure-feed by individual plunger oil pumps is adopted for the main bearings of the crank-shaft, and splash lubrication for all other parts of the engine.

33. An external right-hand view and a cross-sectional view of the engine of the model 69 Overland car are shown in Fig. 11. The lower crank-case *a* is divided into two oil compartments by a crosswise partition near its middle, the forward compartment serving as a common splash trough for the connecting-rods of the first and second cylinders; the rear compartment serves the same purpose for the third and fourth cylinders. Each compartment has a *telltale cock b* carrying a stand pipe *c*; if oil does not issue from the telltale cock when opened, oil must be added until it does flow. When oil flows from the cock in a stream, the oil level is too high and the cock must be left open until the flow of oil ceases, which occurs when the oil level is even

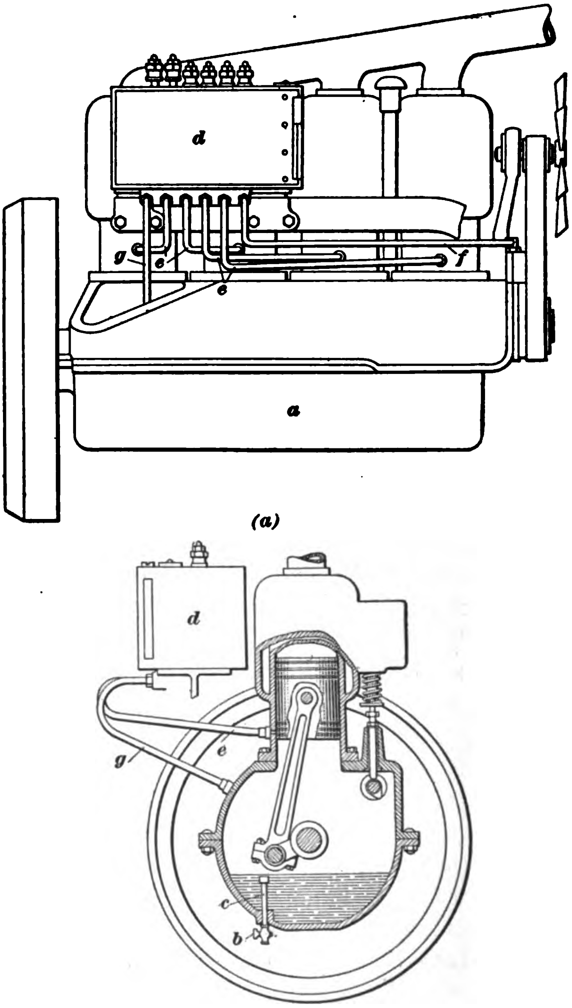

(a)

(b)

FIG. 11

with the top of the stand pipe *c*. A mechanical oiler *d*, which also forms the oil reservoir for the pressure-feed system, is fitted at the right of the engine and with its top about level with the top of the cylinders; owing to its being so near to the cylinders, the oil it contains is kept fluid even in the coldest weather while the engine is running. Inside the oiler *d* are six separate oil pumps, the delivery of each of which can be adjusted independently of the others. The oil delivery pipes *e* convey oil under pressure to the four cylinders; the oil pipe *f* carries oil to the timing gears, and the oil pipe *g* to the rear compartment of the crank-case. Oil from the timing-gear case flows to the forward compartment.

Oil under pressure enters at one side of each cylinder and is distributed over the cylinder walls by three oil grooves turned in each piston near its lower end. The six oil pumps are intended to be adjusted by trial so as to supply just the same amount of oil as is used up. If the cylinders receive too much oil, as evidenced by gray smoke at the exhaust pipe and a very oily combustion chamber, the oil supply to the cylinders is cut down until smoke does not form; after the four oil pumps for the cylinders have once been adjusted, the adjustment for a constant level in the oil compartments is made by adjusting the stroke of the two plunger oil pumps serving the oil pipes *f* and *g*.

LUBRICATING DEVICES

OIL PUMPS

34. The oil pumps used with engine-lubrication systems can be divided into three general classes, which are *gear-pumps*, *plunger force pumps*, and *lifting pumps*. Other classes of pumps have been used in some rare cases, but, broadly speaking, the three classes enumerated cover the oil pumps in actual use.

A **gear-pump** consists of two spur gears in a suitable housing and driven by the engine; this form of pump is probably more widely used than any other in lubrication systems employing a single pump, on account of its simplicity and reliability of action.

In **plunger force pumps,** some rotating part of the engine through an eccentric or a cam actuates a plunger fitting closely in a barrel, and moving to and fro. Oil flows into the barrel on the outward motion of the plunger and is discharged on the inward motion. There are two general classes of plunger force pumps for lubrication systems, which are the *single-valve* class and the *two-valve* class. In the single-valve plunger force pump, only the discharge is controlled by a valve; in the two-valve class, the inlet and the discharge are each controlled by a valve.

In **lifting pumps,** oil flows into the barrel on the outward stroke of a piston, and is also discharged on the same stroke; on the inward stroke, oil passes from one side of the piston to the other through a valve in the piston itself.

35. Oil pumps used in automobile engines are often so constructed that the quantity of oil delivered may be varied. When a circulating constant-level splash system is employed, there is no need for an adjustable oil pump; with a constant-level non-circulating splash system, an adjustable oil pump is usually employed. In high-pressure lubricating systems, it is generally considered advisable to control the oil delivery in some manner.

When a gear-pump is employed, its oil delivery is controlled by a relief valve capable of being set at different pressures, and permitting some oil to flow back from the delivery side to the suction side. With plunger force pumps and lifting pumps, which are incorporated in, and are positively driven from, the engine, the most obvious way of varying the oil delivery is to provide means for varying the length of the stroke. At one time, it was common practice to combine the oil reservoir and a number of oil pumps into a structure called a *mechanical lubricator*, which was entirely separate from the engine; the pumps were then actuated from a shaft that derived its motion through being belted to some rotating part of the engine. In that case, in addition to providing means for adjusting the length of the stroke of each pump, it was possible to vary the quantity of oil delivered in a given period of time by making the pumps run faster or slower in relation to the engine speed; this was done by changing the size of the driving or driven pulleys, or of both, as was most convenient. Separate mechanical lubricators are virtually obsolete at present; in modern automobile practice, the lubrication system forms an integral part of the engine.

36. In Fig. 12 is shown a top view, with the cover removed, of the gear oil pump used in the engine of the Chalmers "36" car. There are two meshing spur gears *a* and *b* on shafts having bearings in the housing *c*; the gear *a* is driven from the engine in the direction of the arrow marked on it and drives the gear *b*. The housing *c* closely fits one-half the circumference of each gear, and in conjunction with the two gears forms an inlet chamber at *d* and an outlet chamber at *e*. The oil inlet to the pump is at *f* and communicates through a port *g* with the inlet chamber *d*; the port *h* in the outlet chamber *e* communicates with the oil outlet *i*, from which a pipe leads to a sight-feed glass on the dashboard of the car.

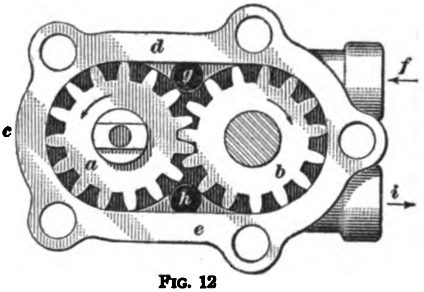

FIG. 12

Rotation of the gears in the direction of the arrows marked on them takes oil from the inlet chamber and carries it around the semicircular parts of the housing to the outlet chamber, whence the oil passes to the sight-feed glass and thence to the engine.

37. In Fig. 13 is shown a section through the mechanical lubricator used on the model 69 Overland car, in which six individual pumps are used; the section shows one of these pumps, which are plunger force pumps employing a single valve. The pump consists of a cylindrical plunger *a* that closely fits the pump cylinder *b*, in the lower end of which there is a delivery check-valve *c* that opens toward the engine and is held to its seat by a small spring *d*. Two small holes *e* admit oil to the pump cylinder when the plunger *a* is near the top of its stroke. The plunger is actuated by an eccentric *f* on a shaft *g* that is rotated by the engine, and, in this case, carries six eccentrics for driving the six pumps. A yoke *h* is attached to the plunger *a* and passes through the cover *i* of the lubricator; a spring *j* holds the yoke in contact with the eccentric *f*, and, as the eccentric revolves forces the plunger downwards. The upper end of the yoke *h* is threaded and is provided with an adjustment nut *k* and locknut *l* by means of which the quantity of oil discharged is regulated.

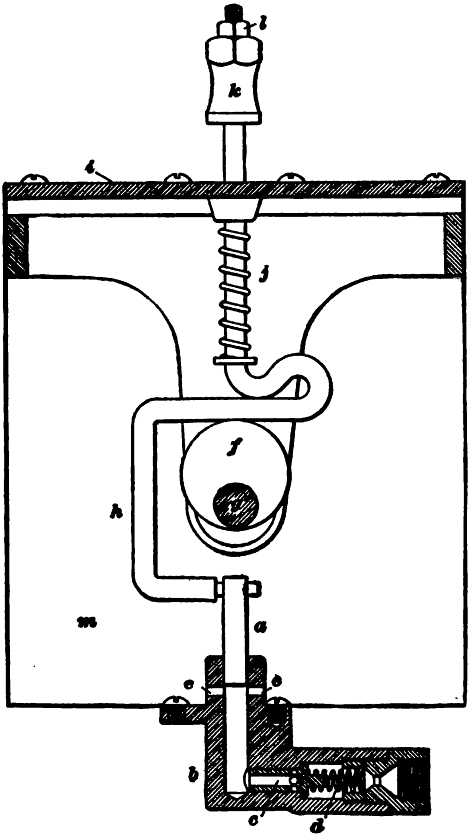

FIG. 13

The action of the pump is as follows: When the plunger *a* is near the top of its stroke, the holes *e* are uncovered and oil from the reservoir *m* flows into, and fills, the pump cylinder *b*. As the eccentric revolves from the position shown, the spring *j* forces the plunger *a* downwards, thus closing the ports *e*. As the plunger continues to descend, it pushes the oil in the pump cylinder ahead, thereby opening the check-valve *c* and discharging the oil toward the engine. As soon as the eccentric *f* lifts the yoke *h* and plunger *a*, the check-valve *c* is closed by the spring *d* and as soon as the ports *e* are uncovered the cylinder of the pump again fills with oil.

The delivery of oil is directly proportional to the distance the plunger *a* travels; by screwing down the nuts *k* and *l* the nut *k* comes in contact with the cover *i* before the eccentric *f* has reached the lowest point during its rotation, and the travel of the plunger is hence shortened and the oil delivery reduced. Conversely, by screwing the nuts *k* and *l* upwards, the travel of the plunger is lengthened and the oil delivery is correspondingly increased.

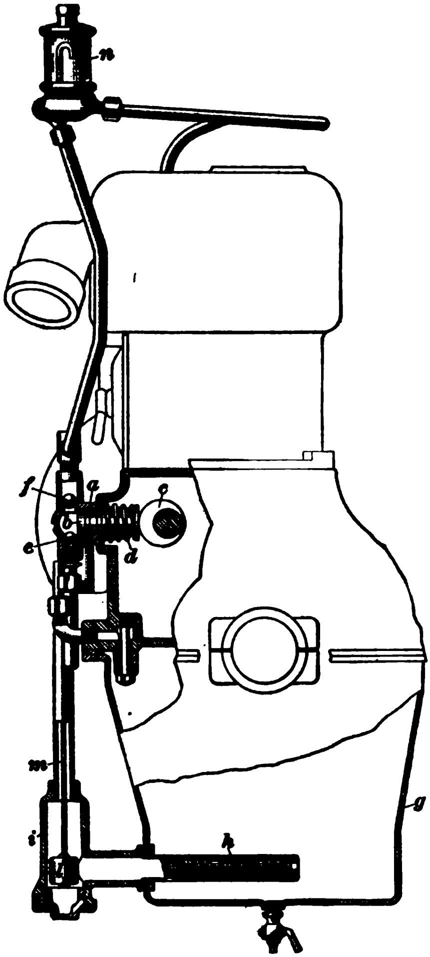

FIG. 14

38. Plunger force pumps with two valves may or may not have an adjustable stroke. That used in the Studebaker "35" engine, which has a circulating constant-level splash lubrication system is of the non-adjustable type; it is shown in section in Fig. 14. It consists of a horizontal cylinder *a* bored to closely fit the plunger *b*, which is pushed inwards by an eccentric *c* on the cam-shaft and outwards by a spring *d*. A ball check valve *e* is placed on the suction side of the pump and a similar check-valve *f* on the delivery side.

The action of the pump is as follows: On the outward stroke of the plunger, the check-valve *f* is closed and a partial vacuum forms in the pump cylinder. In consequence, the atmospheric pressure on the oil in the reservoir *g* forces oil up the suction pipe joining the oil reservoir and the suction side of the pump cylinder; the oil lifts the suction check-valve *e* and fills the pump cylinder. The suction pipe is shown at *e*, Fig. 4. On the next, or inwards, stroke of the pump plunger, the suction valve *e*, Fig. 14, closes and the oil in the pump cylinder lifts the delivery check-valve *f* and passes to its destination.

39. While the plunger pump described in Art. **38** is placed in a horizontal position, the more common practice is to place such pumps vertically, and directly into the oil reservoir in the bottom of the lower crank-case; the suction valve is then submerged in oil at all times as long as there is any oil in the reservoir, which insures a prompt action of the pump as soon as the engine starts. If a plunger pump is some distance above the oil reservoir, the oil may leak out of the suction pipe; it then becomes necessary to *prime* the pump in order to make it pump oil; that is, the pump and suction pipe must be filled with oil by hand.

40. An adjustable-stroke plunger pump of the vertical type with two valves is used in the Northway, model 31, unit-power plant, and is shown in Fig. 15, together with its actuating mechanism. The plunger *a* is actuated by the spring *b* in an upward direction, and is pushed downwards by the follower rod *c*, which is pushed down by the eccentric *d* on the shaft *e*. This shaft *e* carries a worm-wheel *f*, which engages a worm *g* on the cam-shaft *h* of the engine, and hence is rotated by the engine. In this particular case, the worm-wheel *f* and worm *g* are so proportioned that twenty-five revolutions of the cam-shaft produce one revolution of the shaft *e*, which means one suction stroke and one delivery stroke of the plunger *a*. This plunger has an enlarged head, as shown, which bears at the upper limit of the plunger travel against the adjusting screw *i*. Screwing the adjusting screw down reduces the plunger travel and hence the oil delivery; screwing the same screw upwards increases the oil delivery. The suction valve *j* is always submerged in oil; the delivery valve *k* opens toward the passage *l*, which in turn connects with the passage *m* from which the oil passes through a pipe to a sight-feed glass and thence back to the engine.

The pump has an adjustable stroke because it is used with a non-circulating constant-level splash lubrication system.

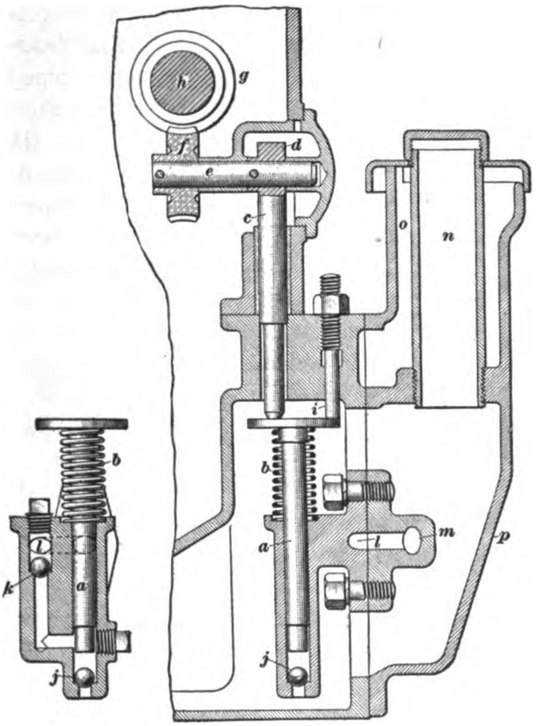

Fig. 15

The oil reservoir is filled through the filler pipe *n*, which is placed in the center of the breather pipe *o*. The whole oil pump is attached to the combined oil-pump cover *p* and breather pipe, and can be removed bodily for inspection by taking off the cover *p*, which is bolted to the outside of the lower crank-case.

41. A lifting oil pump is employed in the engine of the Maxwell "25" car, and is shown in cross-section in Fig. 16. The pump consists of a body *a* in which a cylindrical bucket *b* moves up and down. This bucket is fitted at its lower end with an upwardly opening ball check-valve *c*, which is prevented from being lost out of the barrel by a cross-pin *d*. An upwardly opening ball check-valve *e* is also placed at the bottom of the pump body *a*. The suction pipe *f* connects to the bottom of the oil reservoir. The pump bucket is driven from the forward end of the cam-shaft by a crankpin *g* and connecting-rod *h*, the crankpin *g* being mounted $\frac{3}{16}$ inch from the center on the head *i* of the capscrew fastening the timing gear to the cam-shaft, so that the bucket has a stroke of $\frac{3}{8}$ inch. On the upward stroke of the bucket *b*, the check-valve *c* is seated, but the check-valve *e* is open, and oil passes from the oil reservoir into the pump. As soon as the downward stroke of the bucket begins, the suction check-valve *e* seats itself and the delivery check-valve *c* opens, so that the oil in the pump can pass to the inside of the plunger and into the upper part of the pump body below the surface *j*. On the next upward stroke, oil above the bucket is discharged, flowing over the surface *j* to the timing gears of the engine.

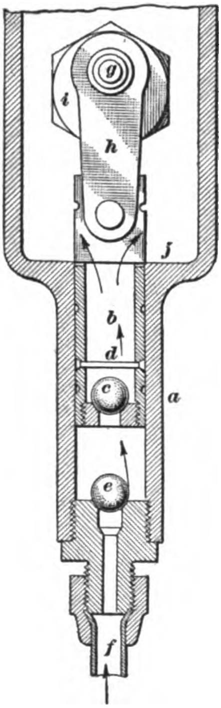

FIG. 16

OIL RELIEF VALVES

42. Forced-feed lubrication systems of the high-pressure type fitted with a single pump are usually also fitted with an oil relief valve. This serves not only as a safety valve and prevents the breaking of any part in case the oil delivery pipes should get blocked in some manner, but it also permits the adjusting of the oil pressure so as to supply the correct amount of oil to the engine.

The Marmon "32" car uses a high-pressure lubrication system in its engines, some of which are fitted with the oil relief valve shown in Fig. 17. In this system, an engine-driven gear-pump takes oil, through the suction pipe *a*, from the reservoir in the bottom of the lower crank-case and discharges it, from its discharge chamber *b*, through the discharge pipe *c* to the main bearings. An opening at the top of the discharge chamber *b* communicates with the suction side of the oil pump; this opening is normally closed by a ball valve *d* that is held to its seat by a helical spring *e*. The tension of the spring can be changed by means of the adjusting screw *f*, which can be locked by the locknut *g*. The pressure at which the ball valve *d* opens depends on the tension of the spring *e*. As soon as the pressure in the oil delivery pipes reaches that for which the relief valve is set, the valve opens and lets oil escape back to the suction side of the pump.

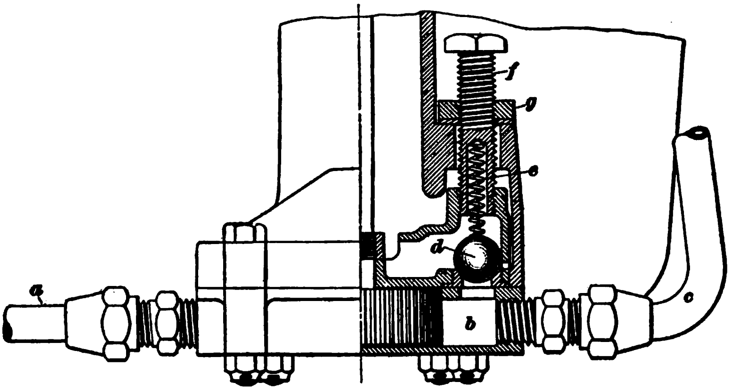

FIG. 17

Some oil relief valves employ a poppet valve instead of a ball valve.

OIL STRAINERS

43. Practically all circulating constant-level splash oiling systems, pressure-feed oiling systems, and combinations of the two systems that employ a pump for circulating the oil, are fitted with a fine-mesh wire strainer on the intake side of the pump. This strainer is intended to remove metal particles worn off the rubbing surfaces, carbon, and similar foreign substances from the oil before it is delivered to the splash troughs or bearings. Some manufacturers screen the oil again after it leaves the pump; an example of this is shown at *d*, Fig. 10.

Oil strainers used in connection with oil pumps are made in different ways; as a general rule, they are easily removable for inspection, cleaning, or replacement. One way in which this may be accomplished is illustrated in Fig. 18, which shows the mounting of the oil strainer on the suction side of the oil pump of the Pierce-Arrow oiling system that is shown in Fig. 10. The strainer *a*, which is made of wire gauze and is cylindrical in form, is attached at one end to the removable plug *b* and at the other end to the inlet pipe *c* of the oil pump. This inlet pipe is perforated, is attached to the plug *b*, and is loose in the inlet passage to the pump. Consequently, the plug *b* with the strainer *a* and pipe *c* can be removed as a unit. Obviously, the oil must be drained from the oil reservoir before the strainer is removed.

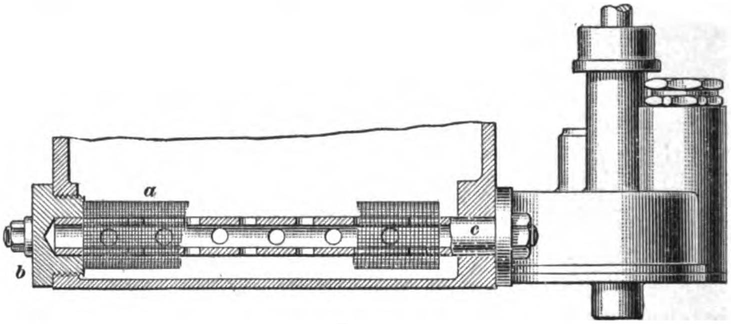

FIG. 18

Another way of making an oil strainer is shown at *h*, Fig. 14. Sometimes an oil strainer forms part of the oil pump, and is then exposed by removing the pump; an example of this construction has been shown at *c*, Fig. 3.

44. To insure that only clean oil can enter the oil reservoir of the engine-lubrication system, a number of manufacturers place an oil strainer of fine-mesh wire gauze in the filler opening of the oil reservoir, which opening in many cases also serves as the crank-case breather pipe.

OIL-LEVEL GAUGES

45. For the purpose of showing the height of the oil in the oil reservoir of automobile engines, *oil-level indicators*, which are often called *oil gauges*, are frequently fitted. There are four types of such indicators, which are *gauge cocks*, *glass oil gauges*, *float oil gauges*, and *transferring oil gauges*.

46. **Gauge cocks** are cocks screwed into the oil reservoir at different heights; an example of this method of finding the oil level is given in Fig. 2, where gauge cocks are shown at *e* and *f*. If oil does not come from the upper gauge cock but comes from the lower cock when these cocks are opened in succession, it shows that the oil level is above the level of the lower cock but below the level of the upper cock.

47. **Glass oil gauges** were commonly used on cars in which the oil reservoir was entirely separate from the engine; sometimes they were incorporated in the reservoir, and occasionally they were separate therefrom and mounted on the dashboard. An example of the last-named practice is found at *g*, Fig. 7. A glass oil-level gauge consists simply of a glass tube partly enclosed in a metal shield for protection, the tube being connected at the bottom to the bottom of the oil reservoir and placed at the same level; the glass tube is open at the top, generally through a small hole in the cap of the metal shield. Glass oil gauges are rarely applied to oil reservoirs found in the bottom of the lower crank-case, on account of the difficulty of observing their indication in that location, because the bottom of the engine, when installed in the car, is generally enclosed by a sod pan, and the gauge is too far down to be easily read from the top when the hood enclosing the upper part of the engine is lifted.

48. A **float oil-level gauge** is most commonly used. It consists of a cork, or hollow metal, float that floats in a fairly large vertical tube attached to the bottom of the oil reservoir. A wire stem is attached to the upper end of the float, and the end of the wire by its position on a graduated scale, or in a glass tube, indicates thereon the oil level in the reservoir. The object of attaching a long vertical stem to the float is to permit readings to be taken at a level in plain sight of the observer. A float oil gauge is shown in Fig. 4, where *l* is the float chamber and *m* the glass tube. A cross-section of the float chamber *l*, Fig. 4, is shown at *i*, Fig. 14, where the float *l* and stem *m* are exposed to view.

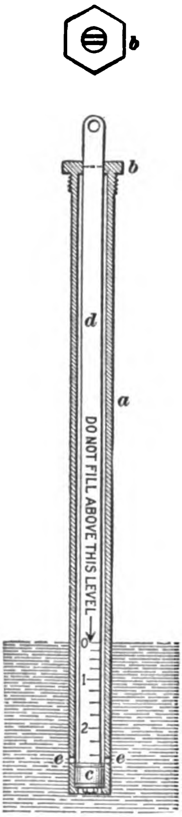

Fig. 19

49. **A transferring oil gauge** derives its name from the fact that it indicates the oil level in the oil reservoir by transferring a column of oil from the reservoir to a higher level where its height can be plainly seen. This form of an oil gauge is attached to the engine of the Hupmobile "32" car, and is shown in Fig. 19. It consists of a cylindrical tube *a*, the head *b* of which is screwed into a vertical hole of the upper crank-case, and a movable, closely fitting piston *c* attached to a flat stem *d*. The tube *a* reaches down into the oil reservoir; when the piston *c* is pushed to the bottom it uncovers holes *e* through which oil enters the tube and fills it to the same level as exists in the reservoir. The flat stem *d* passes through a rectangular slot in the head *b* and is a rather loose fit therein; the stem is graduated at the bottom, as shown, the figures indicating in gallons the amount of oil that should be added to bring the oil to the correct level in the reservoir. To use the gauge, the stem is slowly pulled upwards; the first upward motion closes the holes *e* and the oil in the tube is then lifted. As soon as oil appears at the slot in the head *b*, the graduation on the stem is read at the level of the upper surface of the head *b*.

This particular oil gauge differs from other forms in that it does not show how much oil is in the reservoir, but how much is to be added to the reservoir. A gauge of this kind can be graduated, however, to show the depth of oil in the reservoir.

OIL SIGHT-FEED GLASSES

50. The great majority of constant-level splash lubrication systems that employ an oil pump or oil pumps are provided with a device placed where it is easily observed by the driver, and which shows whether the pump or pumps are working properly. This device is spoken of as an *oil sight-feed glass;* it derives its name from the fact that it permits the stream of oil coming from the pump or pumps to be observed through a glass window or a glass tube.

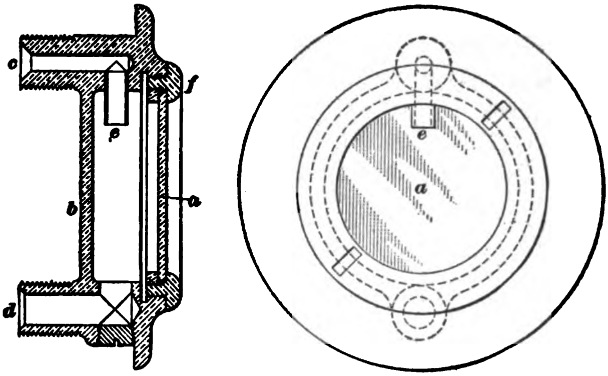

FIG. 20

Fig. 20 shows an oil sight-feed glass in which the oil is observed through a circular glass window, or *bull's eye*, *a*. This device consists of a brass body *b* circular in cross-section and provided with an oil inlet *c* and oil outlet *d*. A pipe is connected from the delivery side of the oil pump to the oil inlet *c*; a much larger pipe is connected to the oil outlet *d* and conveys the oil to the engine. The oil inlet *c* connects with a downwardly pointing nozzle *e*. The glass window *a* is set into a ring *f* that is screwed to the body, as shown.

In a circulating constant-level splash oiling system, the proper working of the oil pump is indicated by a continual stream of oil issuing downwards from the nozzle *e*; in a non-circulating constant-level splash oiling system an intermittent stream issues from the nozzle *e*.

The oil outlet *d* is made much larger than the oil inlet *c* in order that the oil may flow away freely to the engine; the inflow of oil is positive, while the outflow is only under the influence of gravity.

51. Oil sight-feed glasses in which the flow of oil is observed through a glass tube do not differ in principle from the one described in Art. **50.** As a general rule, the oil inlet and oil outlet are at the same level; the oil inlet is fitted with a vertical tube bent downwards on top and pointing toward the outlet opening. A glass tube surrounds the vertical tube and is closed on top by a metal cap. Such a sight-feed glass is shown at *h*, Fig. 4, and at *n*, Fig. 14.

Forced-feed lubrication systems of the high-pressure type are not fitted with oil sight-feed glasses but with pressure gauges.

OIL AND GREASE CUPS

52. On unimportant movable joints that require oil only occasionally, oil cups are used to some extent. An **oil cup,** as used in automobile work, is not a device that holds a quantity of oil that is gradually fed out, but is a quickly opened covering of suitable form applied to the outer end of an oil hole; it permits the ready introduction of the spout of an oil can and is readily closed to keep dirt out of the oil hole.

Three common forms of oil cups are shown in Fig. 21. All three are threaded at their lower end to permit their being attached to the oil hole to which they are applied. The one shown in (*a*) has a nurled sleeve *a* with an oblong hole *b*; the sleeve *a* can be turned so that its hole *b* registers with a similar hole in the hollow stationary body *c* of the oil cup. When the two holes register, oil is introduced with an oil can; after this has been done the sleeve *a* is supposed to be turned until the hole in the body is covered by the sleeve, thus keeping out dirt. The oil cup shown in (*b*) has a cover *a* attached to a spring *b* fastened to the body *c* of the cup. To open the cup, the cover is pulled into the position shown; after the oil has been introduced the cover snaps back on the body when released, thus closing the cup. The oil cup shown in (*c*) has a central hollow sleeve *a* that when pulled up against the resistance of a helical spring inside of it, exposes the hole *b*, through which oil can be introduced. As soon as the sleeve *a* is released, the spring pulls down the sleeve until its head is in contact with the upper edge of the body *c*, thereby closing the cup.

53. **Grease cups** are receptacles for grease that are applied to various important joints requiring grease lubrication, such as the various steering-knuckle pins, spring-shackle bolts, etc., and are so constructed that the grease they contain is easily forced out of them to the bearing to be lubricated. There are two kinds of grease cups in use, known as plain grease cups and automatic grease cups. *Plain grease cups* are used for the intermittent feeding of grease; *automatic grease cups* are used for continuously feeding grease, but are not regularly employed in automobile work.

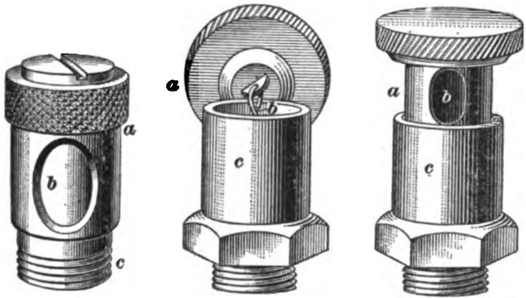

(a) (b) (c)

FIG. 21

54. A very simple plain grease cup extensively used on automobiles is shown in Fig. 22. The cap *a* is unscrewed from the body *b*, nearly filled with a suitable grease, and screwed on again to about the position shown in the figure. The body *b* is permanently screwed into a hole that runs to the bearing surfaces. The pressure of the cap *a* upon the grease is sufficient to feed the grease to the bearing. The cap should be given a turn or two each time the automobile has run a certain distance. When the cap is screwed down as far as it will go, it should be removed, refilled, and replaced.

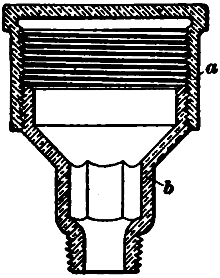

FIG. 22

The plain grease cup shown in Fig. 23 has at *b* a packing of leather or other suitable material that is held in position by the threaded piece *a*, which should be tight enough to make the packing fit close to the cap thread. Dust is less liable to enter this cup than the one shown in Fig. 22; also, its cap is less liable to jar loose.

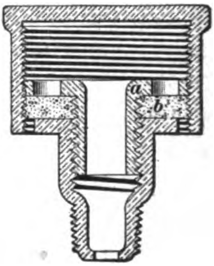

FIG. 23

In Fig. 24 a ratchet grease cup is shown. It is provided with a bottom piece *a* that cannot rotate, but can move up and down. The spring *b* presses the piece *a* up against the lower edge of the cap *d*, and when the projection *c* corresponds with the notch in the lower edge of the cap, the latter is usually held so tight that it will not be unscrewed by vibration; nevertheless, it can be readily turned by hand. This grease cup is suitable for use on moving or jarring parts of an automobile, as the construction tends to prevent the unscrewing and loss of the cap.

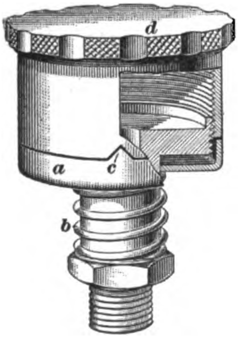

FIG. 24

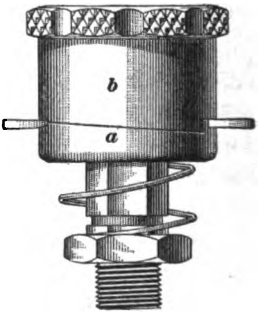

FIG. 25

In another widely used form of a ratchet grease cup, which is shown in Fig. 25, the piece *a* pressed upwards against the lower edge of the cap *b* has two projections resembling sawteeth, and the cap has two notches to fit these projections. The two projections slant in such a direction that the cap can be turned down easily, but cannot be turned up unless the piece *a* is first pressed out of engagement with the edge of the cap *b*. With this construction, it is practically impossible for the cap to unscrew under vibration.

55. While most plain grease cups force the grease by screwing down the cap, as for instance those shown in Figs. 22 to 25, there is another kind used to some extent, one of which kind is shown in Fig. 26, in which a piston is placed on top of grease contained in the cylindrical solid body *a* of the cup. A threaded stem *b* attached to the piston passes through a threaded hole in the removable grease-cup cover *c*, and is fitted with a handle *d* by means of which the stem can be turned, and hence the piston can be moved in or out. To fill the cup, the cover *c* is unscrewed and the piston pulled out of the body *a*.

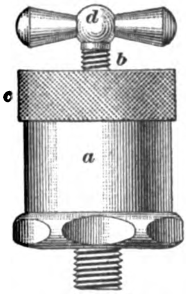

FIG. 26

Grease cups are made of polished, nickel-plated, or rough brass, or of steel. The threads on the shanks are usually standard iron-pipe threads, varying in size from $\frac{1}{8}$ to $\frac{1}{4}$ inch. Grease cups of large size with shanks threaded larger than $\frac{1}{4}$-inch pipe thread are on the market but are hardly ever used in automobile work; in fact, grease cups with a shank larger than $\frac{1}{8}$-inch pipe thread are quite rare. The capacity of grease cups used in automobile work ranges from $\frac{1}{8}$ ounce to $\frac{1}{2}$ ounce of grease, generally speaking.

AUTOMOBILE TIRES

(PART 1)

TIRE CONSTRUCTION AND APPLICATION

TYPES OF TIRES AND RIMS

PNEUMATIC TIRES

1. **Introduction.**—As the name implies, the **pneumatic tire** consists of a hollow combination rubber-and-fabric exterior filled with air under pressure. It is particularly adapted to the pleasure automobile because of its resiliency, which enables it to absorb the shocks caused by the unevenness of the road surface. No material has as yet been discovered that will satisfactorily take the place of the rubber tire containing compressed air, and hence practically all pleasure cars are equipped with pneumatic tires. **Solid tires,** made of rubber and solid in structure, are used on motor buggies and on nearly all commercial vehicles, where ease of riding is not of prime importance. Another form of tire, known as the **cushion tire,** has been used to a limited extent. It is made of fairly soft rubber in a variety of shapes intended to give a cushion effect.

Pneumatic tires are divided into two subclasses; namely, *single-tube tires* and *double-tube tires*.

2. **Single-Tube Tires.**—Single-tube tires resemble an endless ring of ordinary rubber hose, the inside being filled with air under pressure. While widely used on automobile wheels in

the early days of the automobile industry, their inherent defects have caused a gradual passing away, until single-tube tires are not used on modern automobiles.

A cross-section of a single-tube pneumatic tire in place on the wheel rim is shown in Fig. 1. The tire *a* is made up of several layers, or plies, of cotton or linen fabric of very open weave embedded in the rubber. The latter forms the air-tight, waterproof portion, and, externally, the wearing surface of the tire. The fabric is shown in four concentric dotted circles in the figure. For mechanically fastening the tire to the wheel rim *b*, a number of *tire lugs* *c* are provided. These lugs project through the wheel rim and are tapped to receive a lug screw *d*, which holds in place a clamp *e* that bears against the wheel rim and holds the tire in place.

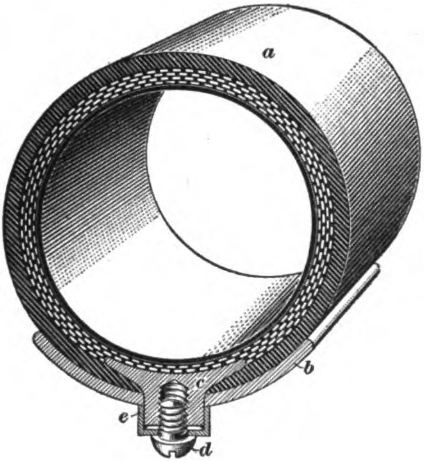

Fig. 1

Instead of using the method of fastening just described, some makers of single-tube tires use studs that are permanently fastened to the lugs; these are then wholly inside the tire, and the tire is fastened to the rim by means of clamps and nuts attached to the studs. Single-tube tires thus attached are intended for use on wire wheels, and cannot be readily used on artillery wheels. Single-tube tires made to be attached as shown in Fig. 1 can be applied to either wire wheels or artillery wheels, provided screws of sufficient length are used.

Single-tube tires are made with either five or eight tire lugs.

3. **Classification of Double-Tube Tires.**—The form of pneumatic tire that is commonly used on pleasure cars is the

double-tube tire. This tire consists of two parts; namely, an outer part composed of rubber and fabric, and called a *casing*, or *shoe*, and an inner part in the form of a hollow cylindrical ring made of soft rubber, and called an *inner tube*, or simply a *tube*.

Double-tube pneumatic tires may be divided into three types in accordance with the manner in which they are fastened to the rim of the wheel. Thus classified, the three types are the *regular clincher tire*, the *mechanically fastened tire*, and the *quick-detachable tire*.

4. **Regular clincher tires** are tires that are fastened to a one-piece rim chiefly by the pressure of the contained air, sometimes aided by a few special clamps.

Mechanically fastened tires are tires that are held to the rim by mechanical means.

Quick-detachable tires are tires that are held in place by specially constructed rims and are put on or removed by first removing the detachable portion of the rim. They are made in two forms; namely, the *quick-detachable clincher tire* and the *quick-detachable straight-side tire*, also known as the *Dunlop tire*.

5. **Regular Clincher Tires.**—The oldest form of double-tube tire is the **regular clincher type,** which is made to fit one-piece clincher rims. The tire is held in place chiefly by *beads* that fit snugly in place under the *clincher*, or *bent-up portion*, of the rim. The beads on a regular clincher tire are soft; that is, they are made of rubber and fabric only, so as to be flexible enough to slip over the rim flange. On the larger tires of this type, tire lugs, or clamps, are used to aid in holding the tire on the rim.

6. In Fig. 2 is shown a short section of a double-tube pneumatic tire of the regular clincher type in place on the wheel rim. The casing, or shoe, *a* of the tire, instead of being completely tubular, is open along the side next to the rim *b*. The middle of the rim is nearly flat and the edges are curved inwards toward each other, as at *c*, so as to form a clinch on each side for holding the tire casing in place. The casing is formed with beads *d* that fit into the clinches of the rim. An inner

tube *e* of soft elastic rubber is placed inside the casing. This inner tube retains the air in the tire. It is provided with a valve through which air can be forced into the tube by means of a pump or some other device, and the valve can be opened to allow the escape of air from the tube when it is to be deflated. This air valve is not shown in Fig. 2. The pressure of the compressed air forces the beads of the casing into the clinches of the rim and retains them there so that the tire is held in place when fully inflated.

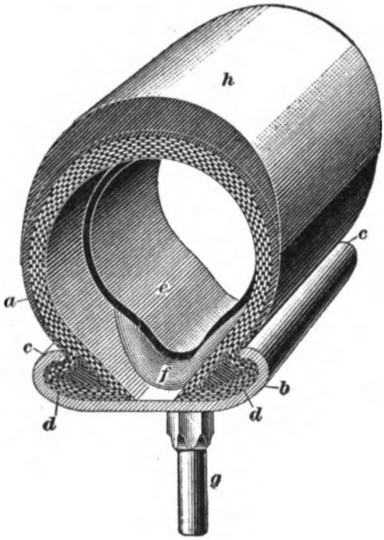

FIG. 2

In order to secure the tire more firmly to the rim, that is, so that it will not be thrown out when a side pressure is exerted upon it, as when a car is turning a curve at high speed, devices variously called *tire lugs*, *clamps*, *clips*, or *security bolts*, of which the head of one is partly shown at *f*, are provided. The head *f* of the tire lug is shaped to conform to that part of the casing with which it is in contact. A bolt extends from the head of the lug inwards toward the center of the wheel, and is threaded to receive a nut *g*, which is used to draw the head of the clamp down tight against the inside of the casing. In the smaller tire sizes in which the regular clincher tire is usually made, tire lugs are generally dispensed with and the bead alone is depended on to hold the tire in place.

The thickest portion *h* of the tire is called the *tread*. It is the part that comes in contact with the roadway when the tire is in use. One or two strips of fabric, called *breaker strips*, are generally placed between the tread and the main portion of the fabric. These strips strengthen the casing, and in case of great wear become exposed and thus indicate the necessity of repair.

When an ordinary clincher tire of the form just described is being placed upon the wheel rim or removed from it, the beads of the tire must be lifted over the clincher portion of the rim. The outside diameter of the clinch is larger, of course, than the inside diameter of the bead of the casing. The bead must therefore be elastic enough to stretch sufficiently to pass over the clinch. In the tire shown in Fig. 2, each bead has a rubber filling that is elastic enough to allow the tire to expand as just described.

7. Mechanically Fastened Tires.—The *Fisk bolted-on tire*, a short section of which is shown in Fig. 3, is an example of a mechanically fastened double-tube pneumatic tire. The rim *a* of the wheel is made of a flat strip of steel. The part of the tire casing in contact with the rim is also made flat. Two retaining rings *b*, held in place by means of bolts that extend from side to side through the tire just outside the wheel rim, are provided to hold the tire in place. The head of one of the bolts is shown at *c*, and the nut on it at *d*. The head fits over the side of the wheel rim *a* and retaining ring *b*, and a clamp *e* just under the nut *d* fits the wheel rim and ring on the opposite side. The tire casing is split circumferentially at *f* in a plane perpendicular to the axis of the wheel.

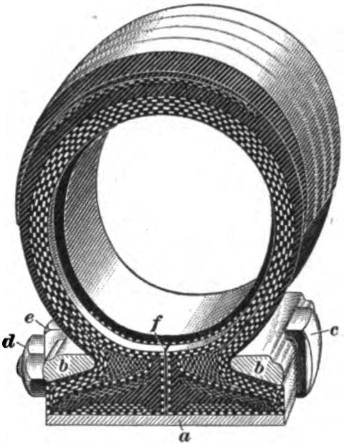

FIG. 3

8. Quick-Detachable Clincher Tires.—The standard form of double-tube tire, which is used much more extensively than the regular soft bead clincher type, is the quick-detachable clincher tire. The only difference between this form of tire and the regular clincher type is in the construction of the bead. In the quick-detachable type, the bead is made stiff and inextensible, and the tire is put on, or removed from, the rim by removing a detachable ring that forms one of the clinches, instead of by stretching the bead over the edge of the clinch.

9. A short piece of a quick-detachable clincher tire, in place on one form of a Firestone quick-detachable rim, is shown in Fig. 4. The beads *a*, which are much stiffer than in the regular clincher tire, fit into two clinches *b* and *c* that hold the tire in place. The one clinch *b* is an integral part of the rim, but the other clinch *c* is a solid ring that is detachable. The retaining ring *c* can be removed by pressing it in toward the center of the rim after the tire has been deflated, and then removing the split ring *d* from the groove of the wheel rim into which it fits. The split ring can be pried out of the groove by a screwdriver, or similar tool, placed in a notch *e* cut in the side of the wheel rim. The ring *d* is prevented from sliding around the rim by a pin *f* that is attached rigidly to the ring and that fits in a second notch in the rim. After removing the rings *c* and *d*, the complete tire can be slipped off sidewise from the wheel rim. When being removed, the tire should first be taken off at the side opposite the air valve.

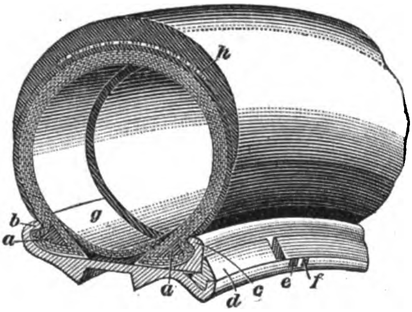

Fig. 4

A loose protective flap *g* in the shape of a channel ring is furnished by some tire makers. This flap is placed between the edges of the casing to form a close joint and a smooth surface for the inner tube to bear against. The flap is generally made of rubber strengthened by embedded woven fabric. A breaker strip *h* is placed on the inside of the tread of the tire to strengthen it. No tire lugs, or clamps, are required for a tire of this type.

10. In connection with quick-detachable clincher tires, it is to be noted that such a tire cannot be applied to a regular one-piece clincher rim. A regular clincher tire can be applied to a rim designed for a quick-detachable clincher tire of the same size, but it is not advisable to do this because quick-detachable clincher rims are usually not drilled for tire lugs, or security bolts, and hence the tire is liable to be torn off the rim while rounding corners if it is not fully inflated.

11. Quick-Detachable Straight-Side Tires.—One of the first quick-detachable tires to be placed on the market, and one that is quite extensively used, is the *quick-detachable straight-side tire*, or *Dunlop tire*. A section of such a tire mounted on the wheel rim is shown in Fig. 5. This tire is not provided with beads, as are the regular clincher and quick-detachable clincher tires; but is built with straight sides and is held in place by solid retaining rings *a* that conform in shape to the sides of the tire. In order to prevent the inner edges of the straight-side casing from expanding appreciably in diameter when the tire is inflated, endless wires *b* are embedded in the hard-rubber base. These wires form a ring that will not expand, and hence a tire of this kind cannot be put on or removed over a clinch. A quick-detachable straight-side tire is removed in the same manner as a quick-detachable clincher tire.

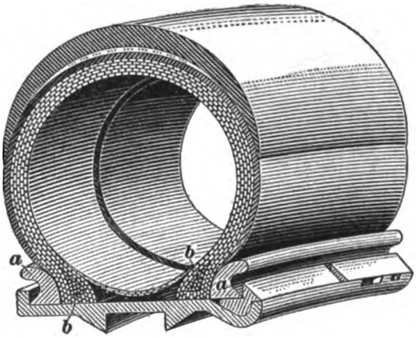

FIG. 5

An ordinary quick-detachable clincher tire can be used on a rim of the type shown in Fig. 5 by simply reversing the rings *a*, thus forming clinches.

12. Detachable-Tread Tire.—In order to provide means for readily replacing the worn tread of a pneumatic tire, a type of tire in which the casing is made up of two distinct and separate parts has been designed. An example of such a tire is the Goodyear *detachable-tread tire*, the two-part casing of which is shown in Fig. 6. This casing is made up of the tread *a* and the carcass *b*, which is the fabric portion of the tire. In view (*a*) the tread is shown in place on the carcass, and in view (*b*) it is shown removed.

The detachable tread *a* is of regulation thickness and in addition has two plies of fabric *c* at the base. It is held in place, when assembled, as shown in (*a*), simply by the friction between the two parts resulting from the pressure of the air in the tire. The sides of the tread are provided with two non-stretchable beads *d*, which hold it snugly to the sides of the carcass. Instead of being made exactly round to fit the carcass perfectly, the inside of the tread is made slightly flat on top so as to form two air chambers *e* and *f*, one on each side of the point where the tread comes in contact with the road surface. It has been found from experience that this construction prevents a certain amount of wear that would otherwise be caused by the friction between the two parts.

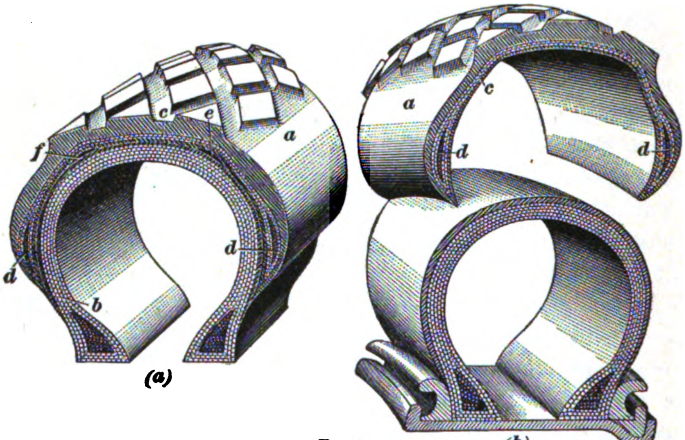

(*a*) (*b*)

FIG. 6

13. With the detachable-tread tire, if either part becomes worn it can be replaced without buying a complete casing. The carcass is held to the rim in the usual manner; the one shown in Fig. 6 is of the quick-detachable straight-side type.

DEMOUNTABLE AND QUICK-DETACHABLE RIMS

14. Explanation of Terms.—A rim so constructed that it can be easily removed from the wheel, thus affording a ready means for changing tires on the road, is called a *demountable rim.* By having the rim demountable, a complete spare tire can be carried inflated on an extra rim, so that the arduous work of changing the tire on the rim on the road and inflating it is eliminated. If the demountable rim and its fastenings are of proper form and in good condition, they can be quickly removed; an inflated spare tire with its rim can then be substituted in much less time than is ordinarily required for putting on a tire, together with its inner tube, and then inflating it.

A *quick-detachable rim* is one that permits the removal of the tire from its rim without the physical effort required to stretch it over a clinch, as in the regular clincher type.

A *quick-detachable demountable rim* is a demountable rim that is fitted with some form of quick-detachable device. With this type of rim, the rim and tire can first be removed from the wheel, after which the tire can readily be removed from the rim by means of the quick-detachable appliance, or the tire can be removed without removing the entire rim.

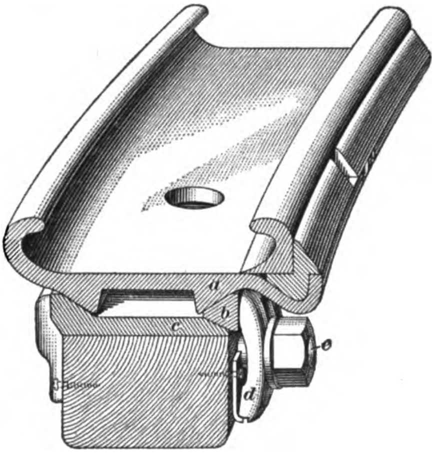

FIG. 7

15. Types of Demountable Rims.—Various methods for securing demountable rims to the felloe of the wheel, so that they can be readily detached, have been devised. A form of demountable rim that is widely used is that shown in Fig. 7, which shows a short section of one form of the Firestone quick-detachable demountable rim. The rim *a* is held in place by a wedge-shaped clamping ring *b* that fits between the beveled edge of the rim and the beveled edge of the felloe band *c*. This ring, and consequently the rim, can be removed by removing six rim clamps *d*, which are held in place by hexagonal nuts on bolts *e* having specially shaped heads.

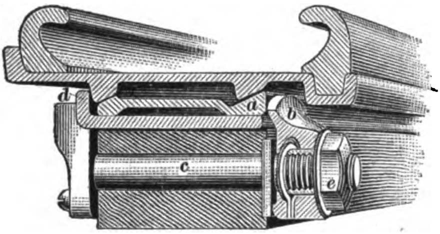

FIG. 8

16. A cross-section of the Stanweld demountable rim number 40, which is similar in principle to the Firestone, is shown in Fig. 8. An adjusting ring *a*, having two beveled surfaces, is held in place by six clamps *b*. The clamp bolts *c* extend through the felloe and butt against the felloe band *d* by means of specially shaped heads. The clamps *b* are supported by the clamp-bolt nuts *e* in such a manner that they are free to adjust themselves to position at all times. The adjusting ring *a* is a band of spring steel and is transversely split. It is easily removed or applied with the hands when the clamps are unlocked.

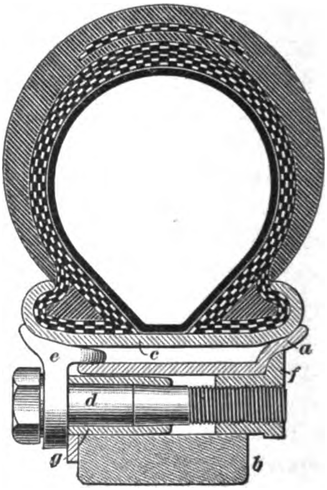

FIG. 9

17. An example of a *bolted-on demountable rim* is shown in Fig. 9, which is a sectional view of the Baker bolted-on rim applied to a tire. A felloe band *a* is shrunk on the wooden felloe *b* of the wheel and the rim *c* is held in place by six bolts *d* that support the same number of wedges *e*. The nuts *f* are fixed in the felloe and the bolts are screwed into them when the rim is assembled. A sleeve *g* forces the wedge *e* out when the bolt is unscrewed. The sleeve is crimped into a groove in the bolt. The rim *c* has integral clinches like a regular clincher rim, but it is split transversely so that the circumference can be reduced when the tire is put on or taken off. When assembled, the ends of the rim are bound together by means of an anchor plate and four stud bolts.

18. Fig. 10 shows the construction of the Booth demountable rim, which differs from the more common forms previously described in that a special locking device is used. Three of the locking devices are arranged at equal intervals around the channel-shaped wheel rim *a*. By means of these devices, the cleats *b*, which are attached to the demountable rim *c*, may be locked in place on the solid rim *a*, thus holding the demountable rim *c* on the wheel.

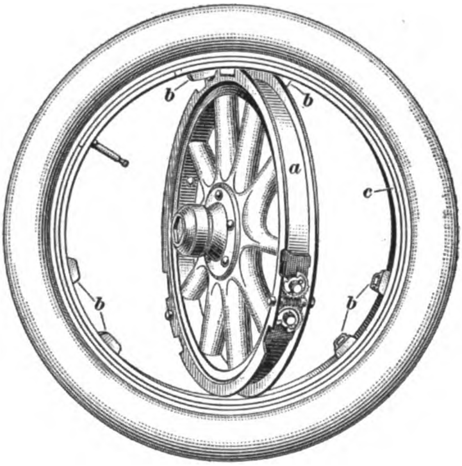

FIG. 10

19. The locking device used on the Booth demountable rim is shown in detail in Fig. 11 in both the unlocked and the locked positions. When in the unlocked position, as shown in view (*a*), the cleats *a* are free to be slid off of the wheel rim *b*, and, therefore, the demountable rim and tire can be removed. The demountable rim is locked in place on the wheel rim *b* by turning a worm-screw *c*, which meshes with two worm-gears *d* that in turn engage with projections on the cleats *a*. Turning the screw *c* in a right-handed direction revolves the gears *d* in such a way as to draw the cleats *a* on the rim *b* and lock the demountable rim in position, as shown in view (*b*). This device, being a worm-and-gear combination, is self-locking.

20. Demountable rims varying somewhat in design from those just described are also used, but the most common types are those that make use of bolts, as shown in Figs. 7, 8, and 9. As a general thing the method of removing a demountable rim is comparatively simple, so that it can usually be ascertained upon a brief examination.

21. Forms of Quick-Detachable Locking Devices. Several forms of quick-detachable mountings for tires are used, each with its distinctive method of removal and replacement. A common form of rim is that in which the inner retaining ring is secured in place by means of a locking ring, as shown in Figs. 4 and 5. In some rims of this type, the locking ring is made with an **L**-shaped cross-section, but it is applied in the same manner as the one referred to.

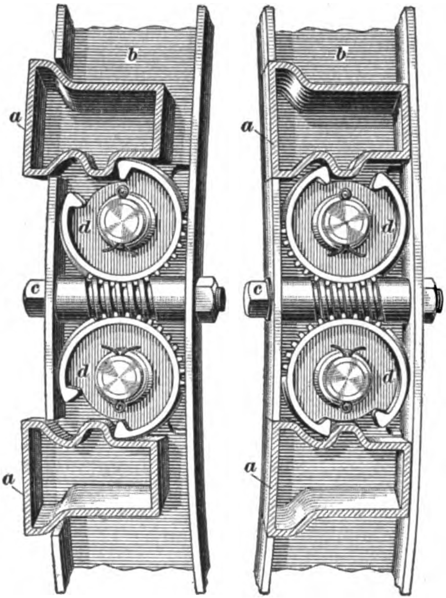

(a) FIG. 11 (b)

22. Another common form of quick-detachable rim is that in which a single side ring may be expanded and removed without the use of a locking ring, an example of which is the Stanweld rim shown in Fig. 8. Two detailed views of the locking device used on this rim are shown in Fig. 12. The outer side ring *a* of the rim is split transversely, and on either end is an **L**-shaped lug *b* that projects through a slot made in the bottom of the groove into which the ring locks. The lock consists of a cam *c* operated by a lever, both being fastened to the rim base *d*. When the side ring is locked, as shown in view (*a*), the wide portions of the cam *c* extend into the slots of both lugs *b* that are on the ends of the ring. When in the locked position, the cam-lever is held in place by means of a small projection on the lever that catches in a corresponding depression in the rim base.

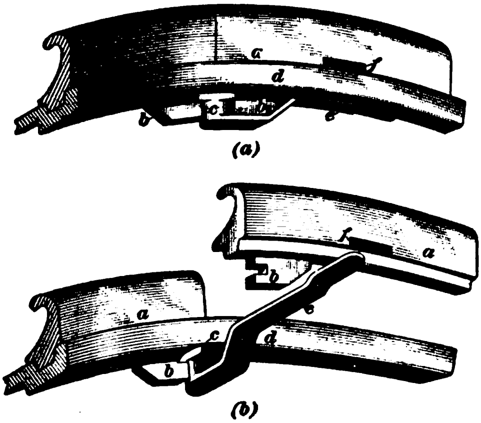

(a)

(b)

Fig. 12

The lock is disengaged by inserting a screwdriver between the cam-lever and the rim base and swinging the lever out until the cam is released from the lugs, as shown in view (*b*). A slot *e* in the lever allows the screw driver to be easily engaged with it during this operation. The side ring *a* is removed by inserting a screwdriver in a slot *f* and prying the ring off over the edge of the rim, when it can be taken off with the hands.

23. In the Standard Universal rim, a removable side ring like that shown in Fig. 12 is used, but it is held in place by means of a **T** bolt and cap instead of by a special latch as on the Stanweld. The head of the bolt extends into the slots in the lugs, and the cap, through which the bolt extends, is fitted over the two lugs, thus clamping the whole together when the nut is applied to the end of the bolt. The tire is detached by removing the nut, cap, and **T** bolt; and prying the ring from the groove in the rim.

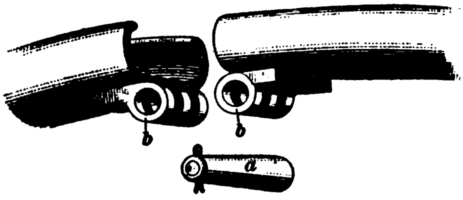

Fig. 13

24. Transversely Split Rims.—In order to facilitate the removal of the tire, some demountable rims are split transversely instead of being fitted with a quick-detachable device. A rim of this type can be sprung together after it has been demounted and the tire can then be removed or put on.

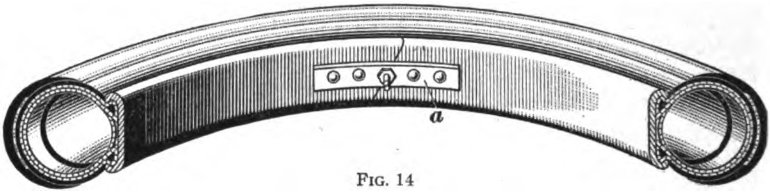

FIG. 14

The ends of transversely split rims are locked together in a variety of ways. In the Booth split rim a taper pin is used, as shown in Fig. 13. When mounted on the wheel, the ends of the rim are held together by a taper pin *a* that passes through brackets *b* on the ends of the rim. The tire is removed by first demounting the rim and then taking out the taper pin. The one end of the rim can then be pressed down and sidewise, thus contracting its circumference and permitting the tire to be detached.

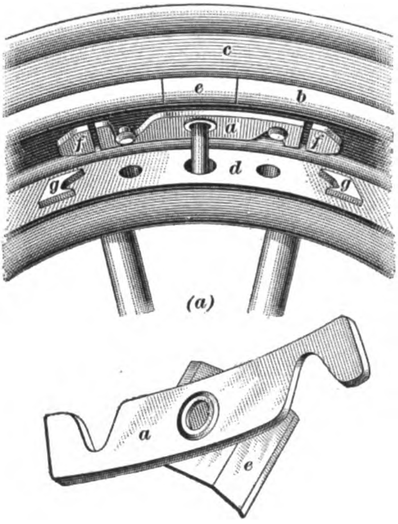

(a)

(b)

FIG. 15

25. The Baker bolted-on demountable rim makes use of an anchor plate for locking the ends of the rim in position, as shown in Fig. 14. The rim is split diagonally at the valve stem and the ends are held together by a plate *a*, which fits over four studs carried by the rim. A fifth hole in the plate allows the valve stem to pass through. The tire may be removed after the rim has been demounted, by taking off the anchor plate and bringing the two short sides of the rim together, thus reducing its circumference.

26. A different form of locking device for a transversely split rim is shown in Fig. 15, which shows the device applied to the Detroit demountable rim. A latch, or cross-tree, *a* is used to lock the ends of the rim in place, as shown in view (*a*), in which view the demountable rim *b* with the tire *c* is in position to be placed on the wheel rim *d*. When locked, the latch *a* engages with two buttons on the inside of the rim. The openings for the buttons are cut at an angle so that as the latch is turned to be locked in place, the rim is expanded. Dirt and water are prevented from entering the tire casing by a small filler segment *e* that is secured to the locking cross-tree. When assembled, the tire-valve stem extends through the center of the latch and the filler segment. A detail of the latch and segment is shown in view (*b*).

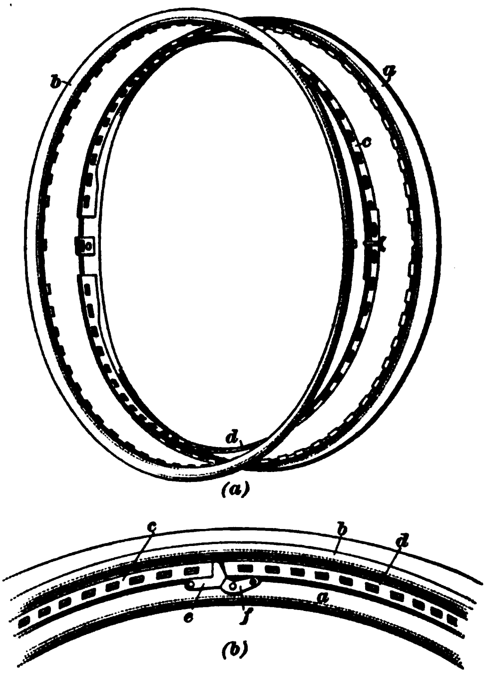

FIG. 16

The demountable rim is prevented from slipping around the wheel rim by blocks *f* and *g* that engage with each other when the rims are assembled. An expanding tool that is furnished with the rim may be used for expanding the rim to remove the filler segment if it should become rusted.

27. Circumferentially Split Rims.—An example of a demountable rim that is split circumferentially is the Stanweld rim, number 30, which is shown in Fig. 16. The sections of the rim are shown in detail in view (*a*). The base of the rim is in two sections *a* and *b* that can be locked together by two semicircular locking rings *c* and *d*, which are shown tied together in order to show their construction. Each section of the rim has a series of lugs that can be made to engage with the slots in the locking rings and hold the rim together. One end of each locking ring is securely riveted to the wide section *a* and the free ends may be locked by means of a swinging latch when assembled, as shown in view (*b*), in which the various parts are lettered the same as in view (*a*). The latch consists of the main latch *e* and a cam-latch *f* that is used for locking in place the main latch.

The tire is removed from the rim by first opening the cam-latch *f* and then the rim latch *e* with a screwdriver, small punch, or similar tool, and prying the locking rings from the lugs, beginning at the free ends and working toward the riveted ends. The two sections of the rim can then be removed, one at a time. When locking the rim, the reverse operation is gone through.

AIR VALVES, LUGS, AND INNER TUBES

28. Tire Air Valves.—In the United States, the kind of check-valve in universal use for admitting air under pressure to a single-tube automobile tire or inner tube and retaining it therein, is that known commercially as the **Schrader valve.** The one made for inner tubes is illustrated partly in section in Fig. 17 (*a*). In (*b*) the air check, which is known commercially as the *valve insides*, is shown to an enlarged scale.

Referring to view (*a*), the stem head *a* is placed inside the inner tube, and a metal washer *b* is clamped down against the tube by means of the nut *c*, which fits on the threaded body of the hollow stem *d*. Between *b* and *c* is a guard, or spreader, *e*, called the *bridge clip*, that prevents the inner tube from coming into contact with the nut *c*. This guard also fits against the side of the shoe, so as to make a tight joint for the bearing surface of the inflated inner tube. The stem *d* is flattened on two opposite sides, as shown at *f*, so that it can be held with a wrench to prevent its twisting around while tightening the nuts.

The nut *g*, when tightened, presses the leather washer *h* against the felloe. The end *j* of the hole *i* is threaded to receive the valve insides.

The outside of the valve stem receives a small cap *k*, which protects the valve from dust and other foreign matter. At the same time, loss of air from the inner tube, in case the air check-valve should leak, is prevented by the rubber packing disk, or washer, *l*, which bears against the end of the valve stem when the cap is screwed in place. A large dust cap *m* screws over the larger portion of the stem against a leather washer *n*, and thus forms a protection for the entire end of the stem.

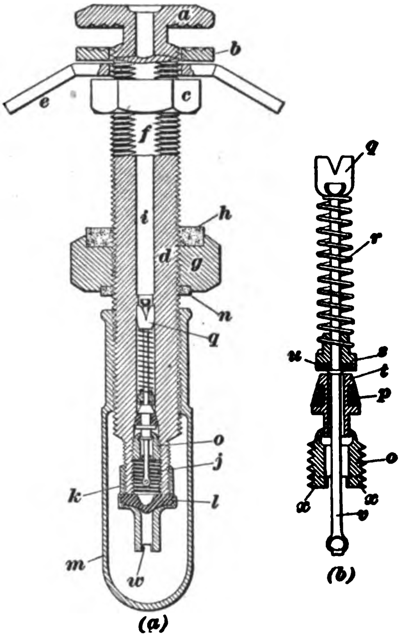

FIG. 17

29. When the threaded piece *o* is screwed down to the proper position, as shown in Fig. 17 (*a*), the conical rubber packing ring *p*, view (*b*), presses against a corresponding coned surface in the hole through the stem, making an air-tight joint. At the same time, a thin brass cup-shaped piece *q* bears against a square shoulder farther down in the hole, so as to compress the coiled expansion spring *r*, and thus force the valve *s* up toward the valve seat *t*. The valve *s* is provided with a soft-rubber valve disk *u*, against which the comparatively sharp edge of the valve seat *t* bears when the valve is closed. When air is passing through the valve into the inner tube of the tire, the valve *s*, together with its rubber disk *u*, is forced away from the valve seat *t* by the pressure of the air against the valve disk.

When it is desired to allow the air to escape, the valve can be opened against the pressure of the air in the inflated tube by pressing against the end of the solid stem *v*. The only part rigidly attached to this stem is the valve *s*, so that when the stem *v* is pushed in against the coiled spring *r*, the valve *s* is forced away from the valve seat *t*. As soon as the valve and seat are separated, the air can escape.

30. In order to provide a ready means of screwing the valve into place and removing it, the small cap *k* has a slot *w* across an extension of its outer end and the end of the part *o* is cut away so as to leave projections *x*, over which the slot *w* fits. The two parts together thus operate as a screwdriver and a slotted screw head. The stem-like extension of the cap *k*, across which the slot *w* is cut, fits loosely into the end of the valve stem, and can therefore be readily inserted to screw the valve into place. The rubber packing *l* in the small cap has a depression on the side next to the valve, in order to prevent it from striking the end of the small stem *v* in case the latter happens to project beyond the end of the main valve stem *d*. The rubber packing is correspondingly crowned on the side opposite the depression so as to secure sufficient thickness of material. The small solid valve stem is flattened at both ends so that the parts of the valve will not fall apart when removed from the main valve stem.

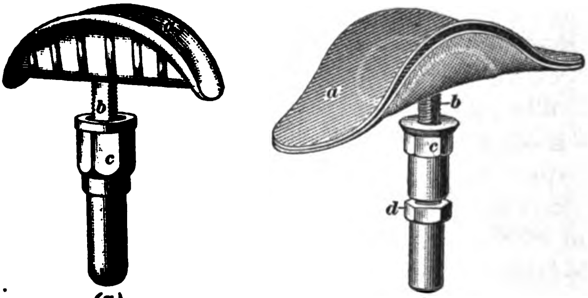

(a)

FIG. 18

(b)

On examining a leaky air valve, it is sometimes found that the leak is due to the packing ring *p* being put on incorrectly when the valve insides were assembled. The obvious remedy of this is to remove the ring and replace it so that its conical surface coincides with the surface of the valve seat *t*.

Schrader valves are made with different lengths of stems to suit different sizes of inner tubes and thicknesses of wheel felloes.

31. Tire Lugs.—Two forms of devices for fastening an ordinary, or regular, clincher tire on the wheel rim are illustrated in Fig. 18. The lug shown in view (*a*) has a rubber-covered head, or spreader, *a*, inside of which is a piece of metal formed to a suitable shape, and to which is attached the threaded stem *b*. The nut *c* is made cap-shaped to protect the stem. A leather washer is usually placed between the nut and the felloe of the wheel, in order both to make a tight joint and to reduce the liability of the nut to work loose.

In view (*b*), the head *a*, which fits inside the shoe between it and the inner tube, is covered with canvas on the side that comes against the shoe and with leather on the other side. The metal portion of the head lies between the leather and the canvas. The stem *b* has the same form as the stem of the lug just described and passes completely through the nut *c*. A locknut *d* is also placed on the stem, and it is screwed down against the nut *c* in order to lock this nut in place after it has been sufficiently tightened. The locknut *d* is cap-shaped and is closed at the end to protect the stem.

In order to eliminate the necessity of using a wrench for tightening the tire lugs, a wing nut, or thumb nut, is sometimes used on lug stems.

32. The head of a tire lug, clip, or clamp must be of such form as to fit closely and smoothly against the inside of the tire casing. It should also fit against the wheel rim in the same manner when the latter is not completely covered by the casing; otherwise, a hole will be blown through the inner tube or the tubes will be locally stretched and permanently distorted around the head of the lug. The excessive local stretching will weaken the rubber and ultimately will likely cause a hole, which may not occur, however, until the tube has been removed, put in a casing, and inflated again.

Tire clamps, or lugs, are usually omitted on regular clincher tires of the smaller sizes, say up to and including 3½ inches diameter of cross-section, in which case the friction of the bead in the rim is depended on to keep the tire from creeping around the rim. The tires seem to be very effectively held in this manner as long as they are fully inflated. However, if the tire on a rear wheel is run after it has become partly deflated, it is liable to creep around on the rim. When this creeping occurs, there is danger of shearing or of tearing the valve from the inner tube.

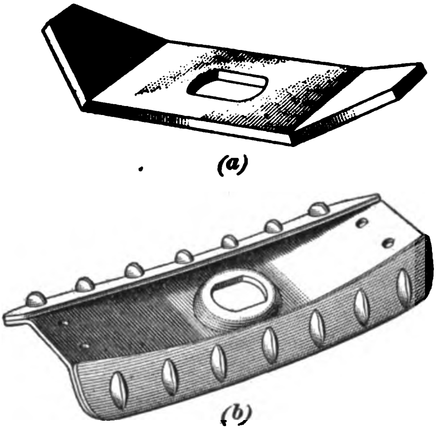
(a)

(b)

FIG. 19

If tire clamps are not used on a rim that has holes for them, the holes should be tightly plugged. The plugs used for this purpose must be smoothed down flush with the rim where the tire bears against it.

Tire clamps serve to prevent the shoe from being pulled from the rim when turning curves, and also to prevent it from creeping around on the rim. The results of leaving clamps off seem to indicate that they are not actually necessary except when the tire becomes deflated.

33. Bridge Clips.—Several forms of bridge clips are used with Schrader valves in order to protect the inner tube at the point where the valve stem is attached, and also to prevent creeping of the tire on the rim. The clip is a large, specially shaped washer, resembling the head of a tire lug, that surrounds the valve stem close to the inner tube, as shown at *e* in Fig. 17 (*a*). A detailed view of this clip is shown in Fig. 19 (*a*). This is a very common form of bridge clip. A much larger clip than this is the Michelin bridge clip shown in view (*b*). It is shaped to conform approximately to the shape of the inner tube and is provided with short projections along each side that tend to prevent it from slipping around the tire and thus to relieve the valve stem of a certain amount of strain.

Another form of bridge clip, applied to an inner tube, is shown in Fig. 20. The metal clip *a* is supported by a nut *b* on the valve stem and a metal washer next to the tube. The inner tube is reinforced at this point by an additional thickness of rubber that is cemented on.

A clip made up like the tire-lug head shown in Fig. 18 (*a*) is largely used. Any form of bridge clip can be used on any type of double-tube tire, although some tire companies recommend special clips for different types of tires. For instance, the Diamond Rubber Company furnishes a special clip to be used with their quick-detachable and regular clincher tires, while the clip shown in Fig. 18 (*a*) is to be used with straight-side tires. Attention is called to the fact that the proper size bridge clip must always be used, because one made for instance for a 5-inch tire will not fit a 2½-inch tire, and vice versa.

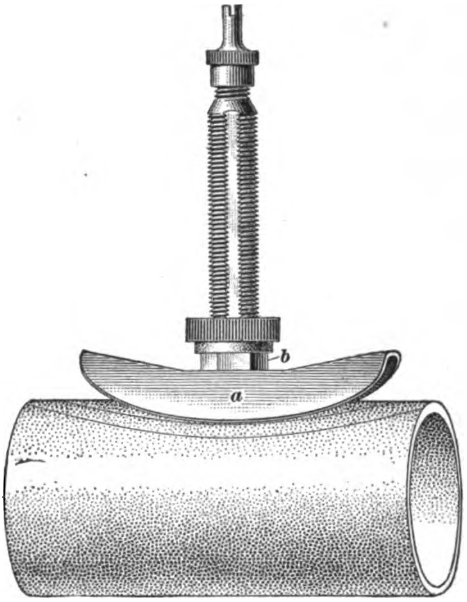

FIG. 20

34. Designation of Tire Sizes.—The size of an American pneumatic tire is designated by first giving, in inches, its outside diameter over the tread and then the diameter of the circle that closely conforms to the outside cross-section of the tire. Thus, when speaking of a 32″×4″ tire, it means that the tire has an outside diameter of 32 inches and that a circle 4 inches in diameter will approximate the external outline of the cross-section.

Tires are made in certain standard sizes that are agreed on by tire makers; these sizes are changed, however, from time to time, as occasion demands. Tires are also made to suit the wheel rims of foreign cars, in which case their size is stated in millimeters. The millimeter is $\frac{1}{1000}$ meter, the length of the meter being 39.37 inches, nearly.

35. Oversize Tires.—Double-tube tires larger than the standard sizes are sometimes used in order to increase the cross-section of a tire air cushion, as well as to give a heavier and more wear-resisting tread. These are known as *oversize tires* and are applied without changing rims. They are ½ inch larger in cross-section and 1 inch larger in diameter than the uniform sizes with which they interchange. For instance, the oversize tire for a 32″×4″ rim is 33″×4½″.

As a general thing, it is advisable to use the corresponding size of inner tube with any casing, although the Goodyear Tire and Rubber Company has on the market an inner tube constructed especially to be used with a larger sized casing, at least in the smaller sizes; this practice is uncommon, however. With this special tube, an oversize casing can be fitted to a rim and the standard-sized inner tube retained. Thus, an inner tube intended for a 32″×3½″ casing can be used in a 33″×4″ casing. However, unless special provision is made it is not advisable to make a practice of using an inner tube smaller than is intended for a casing. An inner tube larger than the proper size for a casing can also be used temporarily, as in an emergency. A tube that is too large, however, wrinkles in the casing and is liable to chafe through quickly or crack at the short bends of the wrinkles.

Standard sizes of tires can always be recognized by the fact that the tread diameter is given in even inches; oversize tires have the tread diameter in odd inches. Thus, a 36″×4″ tire is a standard size, while a 37″×4½″ tire is an oversize tire. The use of oversize tires is advisable when standard size tires on a car are overloaded and hence wear out faster than they should.

36. Permanent Tire Treads.—The tread of tires is made in various contours, the most common one being the *plain tread*, shown in Figs. 2 to 5. *Raised treads* of various forms are also used extensively for the purpose of giving protection against side slipping; some of the most common examples are shown in Fig. 21. In view (*a*) is shown the *Bailey tread*, in which conical rubber studs project from the tire. The *Goodrich safety tread* is shown in view (*b*). The raised cross-bars tend to prevent fore-and-aft spinning of the driving wheels, while the longitudinal bars tend to prevent side slipping. The *Firestone non-skid tread*, view (*c*), consists of raised rubber letters that grip the road and prevent slipping. Permanently attached tire treads are sometimes made of leather and studded

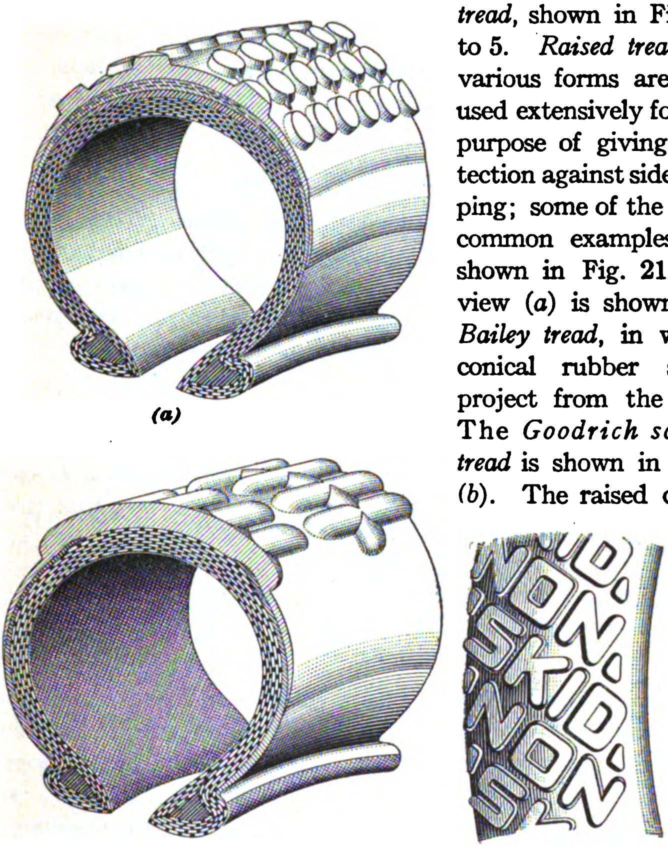

(a)

(b)

(c)

Fig. 21

with steel rivets or studs placed in a manner similar to that shown in Fig. 21 (*a*). Many forms of tire treads other than those mentioned are on the market, each designed with a view to prevent slipping and each having its peculiar advantages.

TIRE MAINTENANCE

INFLATION OF TIRES

37. Loads and Air Pressure for Tires.—There seems to be no very close agreement either among the manufacturers or the users of tires as to just what maximum load a tire can carry or what should be the pressure of inflation. This condition is probably due to the fact that tires of the same size are made of different thicknesses by tire makers, and also that the most suitable inflation pressure depends to some extent on the nature of the road over which the car is run. It is always safe to assume, however, that a tire will not show appreciable bulging between the wheel rim and the roadway if it is properly inflated. In any case, it is not possible to formulate a general statement as to just how slight, according to actual measurement, this bulging should be. A thin, flexible tire will naturally bulge more than a heavy, stiff one, provided both are inflated to the same pressure.

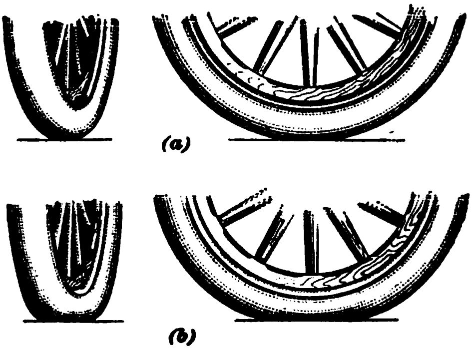

FIG. 22

The lower part of a wheel with a properly inflated tire is shown in Fig. 22 (*a*), and a *soft tire*, as one not inflated hard enough is called, is shown in (*b*).

38. One of the most important things in the care of automobile tires is to keep them properly inflated. The only practical way to determine whether a tire is sufficiently inflated is to use a pressure gauge. Furthermore, if the bad results of under inflation are to be avoided, it is not enough to test the pressure at long and varying intervals but a regular and frequent test should be made, say, twice a week.

Fixed rules are used by some manufacturers for determining the proper air pressure for different sized tires. For instance, the Diamond Rubber Company uses the rule that the required air pressure per square inch equals the diameter of the cross-section of the tire multiplied by 18. Thus, a 36″×4″ tire requires an inflation pressure of $4 \times 18 = 72$ pounds per square inch, by this rule. Other manufacturers use different constants varying from 15 to 21, while in still other cases no definite rule is followed, tables being compiled from experience.

39. Table I gives the inflation pressures recommended by the Firestone Tire and Rubber Company, as well as the safe load for front and rear wheels on a car without passengers.

40. If an automobile is run at high speed for any length of time, the tires will be heated considerably and the air pressure within them will thus be slightly increased. Although this increase of pressure does not endanger a new tire of good quality, it will do harm to an old tire that has become weakened by long use. It is therefore advisable to reduce the air pressure in such tires by slightly opening the tire air valve.

41. Methods of Inflating Tires.—The means used for inflating pneumatic tires may be classified under four general heads; namely, *hand-operated tire air pumps; engine-driven tire air pumps; spark-plug tire air pumps;* and *storage tanks* containing compressed air or carbonic-acid gas.

TABLE I

LOAD AND AIR PRESSURE FOR PNEUMATIC TIRES

Size of Tire Inches	Air Pressure Pounds per Square Inch	Load per Wheel Pounds	
		Rear	Front
28×3	50	350	450
30×3	50	375	475
32×3	50	375	475
34×3	50	400	500
36×3	50	425	525
29×3½	60	450	550
30×3½	60	475	575
31×3½	60	500	600
32×3½	60	525	625
33×3½	60	550	650
34×3½	60	575	675
36×3½	60	625	700
30×4	70	550	700
31×4	70	575	725
32×4	70	600	750
33×4	70	625	775
34×4	70	650	800
35×4	70	675	825
36×4	70	700	850
37×4	70	725	875
38×4	70	750	900
40×4	70	800	950
42×4	70	850	1,000
32×4½	80	800	1,000
33×4½	80	850	1,050
34×4½	80	900	1,100
35×4½	80	950	1,150
36×4½	80	1,000	1,200
37×4½	80	1,050	1,250
38×4½	80	1,100	1,300
40×4½	80	1,200	1,400
42×4½	80	1,300	1,500
33×5	90	950	1,200
34×5	90	1,000	1,250
35×5	90	1,050	1,300
36×5	90	1,100	1,350
37×5	90	1,150	1,400
38×5	90	1,200	1,450
39×5	90	1,250	1,500
41×5	90	1,350	1,600
43×5	90	1,450	1,700
36×5½	95	1,250	1,500
37×5½	95	1,300	1,550
38×5½	95	1,350	1,600
40×5½	95	1,450	1,700
37×6	100	1,350	1,600
39×6	100	1,450	1,700
41×6	100	1,550	1,800

HAND-OPERATED TIRE PUMPS

42. Classes of Hand-Operated Pumps.—While tire inflation by hand-operated means has largely given way to inflation by power-driven pumps, yet the hand pump will doubtless always be used more or less, especially for inflating the smaller-sized tires.

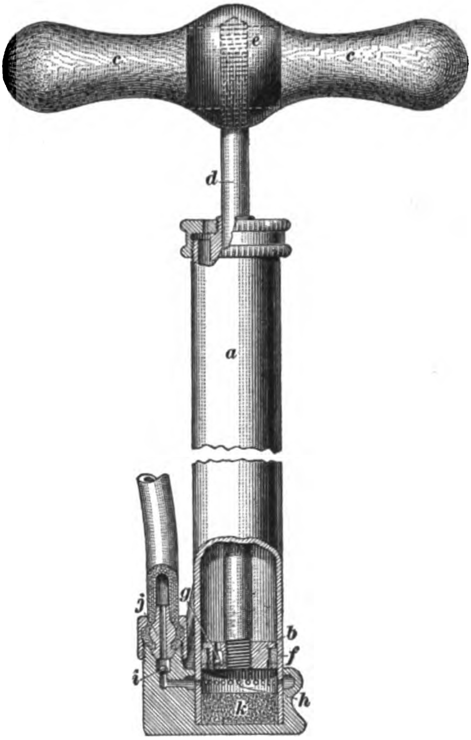

Fig. 23

Hand-operated tire pumps are made *single acting*, compressing the air on the downward stroke only, or *double acting*, compressing the air on both the upward and the downward stroke. Double-acting pumps usually compress the air in two stages; that is, the air is partly compressed on the one stroke and fully compressed on the next stroke. Such pumps are called *double-acting compound tire pumps*.

43. Single Acting Hand-Operated Pumps.—A single-acting tire air pump of simple construction is shown in Fig. 23, which is a sectional view of the Pitner single-acting pump. This pump consists essentially of a barrel *a* and a piston *b* that is actuated by hand by the wooden handle *c* and the piston rod *d*. The wooden handle is first driven into a brass collar *e*, after which the rod is screwed through both. The piston *b* is made air-tight by means of a leather piston ring *f* that fits in a groove around the piston. An air space behind the leather ring provides an air cushion that presses the ring against the barrel of the pump.

Air is taken into the barrel of the pump on the upward stroke of the piston. During this stroke ports *g* in the piston are open and air flows through holes in the cap around the piston rod and into the lower part of the barrel through the ports *g*. On the downward stroke of the piston, the ports *g* are closed by ball checks and the air contained in the lower half of the pump is forced out through small holes *h*, past the ball check-valve *i*, and into the tire hose connection *j*. The check-valve *i* prevents air from entering the pump from the tire on the upward stroke of the piston.

44. The pump shown in Fig. 23 is so designed that as soon as the piston passes the small holes *h* at the base of the pump no more air can escape and thus a small air cushion is formed, which prevents the piston from striking the bottom with a sudden jar. A felt pad *k* is placed below the air cushion to absorb surplus oil and keep it out of tires. An extension, which is not shown, is placed on the base to receive the foot of the operator in order to hold the pump while it is being operated.

45. Single-acting tire pumps are also made in forms differing somewhat from that shown in Fig. 23, but the principle of operation is, of course, the same. Most pumps make use of cup-shaped leather washers instead of leather piston rings for making them air-tight. Such pumps depend on the collapsing of the cup leather for admitting air to the barrel, and hence are not provided with ports and check-valves in the piston.

46. Double-Acting Hand-Operated Pump.—A typical double-acting tire pump is shown in Fig. 24, which is a sectional view of a pump manufactured by the Judd & Leland Manufacturing Company. In order to make this pump double acting, it has two barrels *a* and *b*, each of which is provided with a piston and piston rod. The barrels are connected at the bottom by an air passage *c*, but they are not connected at the top. The inlet is near the top of the larger barrel *a* through two holes, one of which is shown at *d*, and the outlet is from two holes located near the top of the smaller barrel *b*. The outlets connect with the tire hose by means of a passage represented by the dotted lines *e* in the bracket *f*. A stuffingbox *g* that surrounds the piston rod in the upper end of the smaller barrel prevents air from escaping at that point. Each piston is provided with a cup-shaped leather washer; the leather in the larger barrel is placed so that the piston operates on its downward stroke, while the leather in the smaller piston forms an air-tight plunger on its upward stroke. Both pistons are operated by one handle *h*.

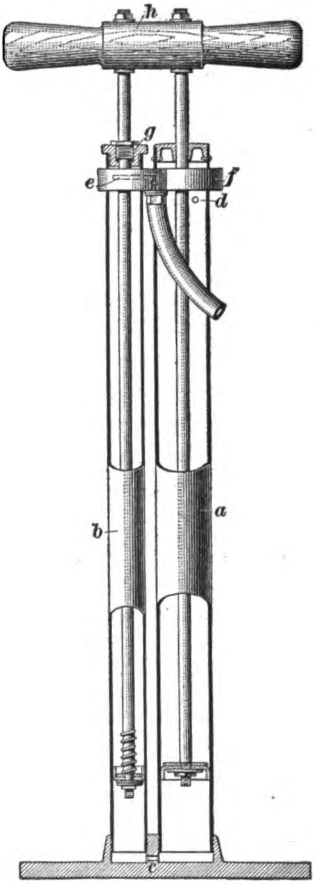

FIG. 24

47. Being a double-acting pump, air is discharged from the outlet during both the downward and upward strokes of the pistons. During the downward stroke, air is drawn in at the upper end of the larger barrel *a* and fills the space above the piston. At the same time the air that was already in the larger barrel beneath the piston and in the smaller barrel *b*, is forced past the smaller piston and into the air hose and tire by way of the outlet passage *e*. The air that remains in the smaller barrel at the end of this stroke is compressed to a certain extent.

During the second, or upward, stroke the air remaining in the smaller barrel *b* is forced out and into the tire by the smaller piston. This air has been previously compressed; hence, on this stroke the pump is a true compound pump. On the downward stroke, however, the air that is forced out has not been precompressed. Besides forcing the air out during its upward stroke, the smaller piston also draws air into the pump through the holes *d* and past the larger piston, so that both barrels are filled with air at the end of this stroke and are ready for the descent of the pistons on their downward stroke, which has been explained.

The successful operation of this type of tire pump depends on the condition of the cup leathers, which must be soft and pliable. When operating properly, air cannot be forced upwards past the larger piston or downwards past the smaller one, but when air is forced in the opposite directions the cup leather collapses and allows it to pass. This action of the cup leathers makes separate check-valves unnecessary.

48. Hand pumps are made with as many as three or four barrels, three barrels being quite common. Such pumps are always double acting and usually compound as well. A tire can doubtless be filled more quickly with a double-acting compound pump, but many drivers prefer the more simple single-acting pump because all of the work is done on the downward stroke. The greater ease with which this pump can be used makes up for the longer time required to inflate a tire.

ENGINE-DRIVEN TIRE PUMPS

49. Application.—Many makes of automobiles are now equipped with power-driven tire pumps that are driven from some part of the engine. Where such a pump is not a part of the regular equipment, provision is made in some cases for its installation. The engine-driven tire pump is simply a small single-acting air compressor, having from one to four cylinders, that is connected to some moving part such as the magneto or water-pump shaft, or the transmission shaft, by means of a metal clutch or by sliding gears. By the use of such a pump, an average sized tire can be inflated in from 1 to 5 minutes and without the arduous labor necessitated by the hand pump.

50. Single-Cylinder Engine-Driven Pumps.—An example of a single-cylinder engine-driven tire pump is given in Fig. 25, (*a*) being an external side view and (*b*), a vertical section. This pump is used on many Pierce-Arrow automobiles. It belongs to the class that makes use of but one valve, the air being admitted through small ports. The tire pump is driven from the transmission countershaft by means of a jaw clutch, one member of which is free to slide on the tire-pump shaft *a*.

The piston and connecting-rod of the tire pump are constructed similarly to those of the gasoline engine. Near the completion of the downward stroke of the piston, the inlet ports *b* are uncovered and fresh air is drawn into the cylinder. On the upward stroke of the piston, the check-valve *c* is lifted off its seat and the air is forced out through the tire hose connection *d*. The cylinder of the pump is air-cooled, being surrounded

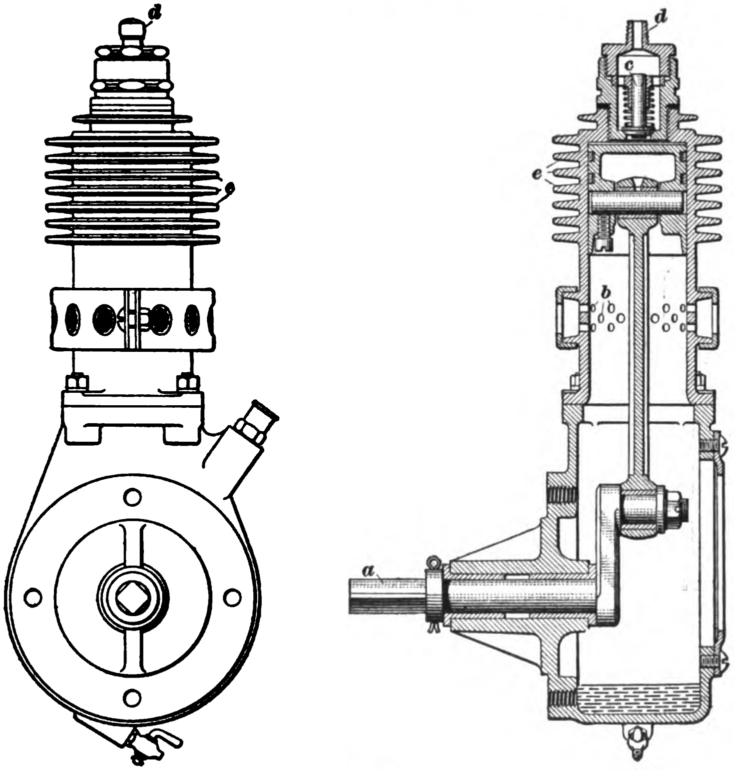

(a) FIG. 25 (b)

by flanges *e* for the purpose of increasing the radiating surface. The moving parts are lubricated by the splash system.

This pump will work most efficiently when run at 300 revolutions per minute. It is started and stopped by a lever, by means of which the jaw clutch can be engaged or disengaged. The pump should be put into action with the engine running slowly and should not be run at a greater speed than just given; otherwise, it will waste power by heating.

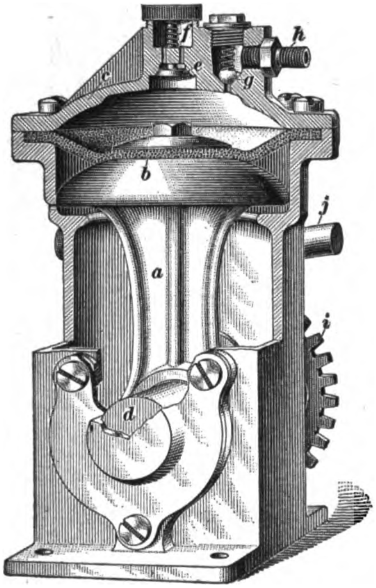

FIG. 26

51. Diaphragm Tire Pump.—A single-cylinder tire pump of peculiar construction is shown in Fig. 26, which is a part sectional view of the Taylor "Noil" diaphragm pump. This pump is so constructed that it is impossible for lubricating oil to become mixed with the air that is being forced into the tire, hence, the name Noil. The ordinary reciprocating piston is not used in this pump but, instead, the upper end of the connecting-rod *a* terminates in a large, mushroom-shaped disk, to which is secured the soft rubber diaphragm *b*. This diaphragm is also secured to the body of the pump by being clamped between it and the head, or cap *c*, thus completely separating the lower portion of the pump from the upper portion, where the air is compressed.

The connecting-rod is reciprocated by means of an eccentric on the shaft *d*. On the downward movement of the connecting-rod and diaphragm, the inlet valve *e*, which is supported by a bronze spring *f*, is drawn open and air drawn into the pump. On the upward stroke, the diaphragm forces the air out past the ball check-valve *g* and by way of the tire hose connection ***h***, to the tire.

The Taylor Noil pump can be driven from any exposed moving shaft but is usually driven from either the magneto or the water-pump shaft. The sliding gear *i* is operated by a lever *j*, by which it can be thrown in and out of mesh with a gear on the revolving shaft. This pump operates most efficiently at a speed of about 600 revolutions per minute. Flanges on the cover of the pump help to radiate the heat resulting from the compression of the air.

52. Multiple-Cylinder Tire Pumps.—The most common form of multiple-cylinder tire pump is air cooled and has the cylinders cast in one piece. Usually the pump has either two or four cylinders arranged vertically, although an exception to this rule is the Abbell pump, which has three cylinders arranged horizontally. The pistons are driven either by cranks or by eccentrics, the lower ends of the connecting-rods forming the straps. In some pumps the pistons are plain and carry no rings, while in other cases they are provided with rings like gasoline-engine pistons. Pump cylinders are sometimes surrounded by a water-jacket and cooled by water, although this is usually deemed an unnecessary refinement.

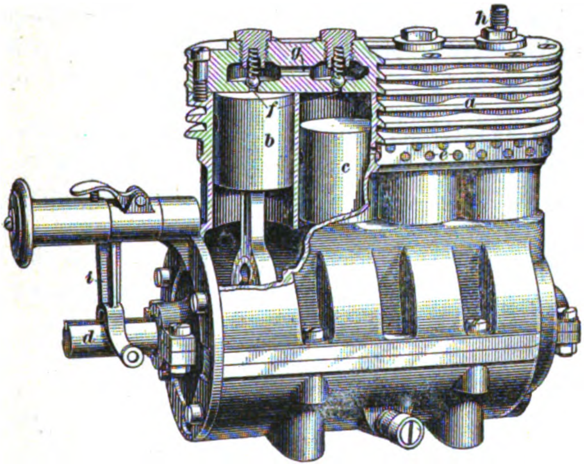

FIG. 27

53. Fig. 27 shows a part sectional view of the Stewart four-cylinder air pump. The four cylinders are cast in one piece and are air cooled, being provided with horizontal flanges *a* for increasing the heat radiating surface. The four pistons, two of which are shown at *b* and *c*, are driven by eccentrics from the shaft *d*. The pistons are perfectly smooth, being simply small cylindrical pieces that have been ground accurately to size. The crank-case is divided horizontally in line with the shaft *d*, the upper half being cast integral with the cylinders. The air inlets *e* are screened. The outlets *f* are provided with ball check-valves and all open into a common passage *g*, from which the air-hose connection *h* on top of the forward cylinder leads. The mechanism *i*, located at one end of the pump, is for the purpose of connecting it to or disconnecting it from the driving shaft.

54. In operation, the action of the pump is the same as that of the Pierce-Arrow single-cylinder pump. On the downward stroke of the piston, the inlet ports *e* are uncovered and air rushes into the cylinder. On the upward stroke, the piston compresses the air and forces it out past the ball check-valve into the outlet passage *g*, thence to the tire connection and the tire.

SPARK-PLUG TIRE PUMPS

55. Tire pumps operated by the alternate compression and suction in the engine cylinder are made up in slightly different forms but operate on the same general principle. They are made to screw into the spark-plug hole of a cylinder, so that, when it is desired to inflate a tire, a spark plug is removed from one of the cylinders, the pump is screwed in its hole, and the motor is run idly on the remaining cylinders.

56. An example of the spark-plug tire pump is the Dewey pump, shown in section in Fig. 28. A differential, or double, piston is utilized, consisting of a large piston *a* that works in the outer cylinder *b*, and a smaller piston *c* that works in an inner cylinder *d*, the two pistons being connected by means of a hollow rod *e*. The pressure in the engine cylinder to which the pump is attached forces the larger piston *a* upwards during the compression stroke in that cylinder. The pressure that is developed during this stroke varies from 50 to 75 pounds per square inch, depending on the compression pressure of the engine. This pressure per square inch is increased by the use of the double piston; hence, the smaller piston *c* is capable of pumping air into the tire at a much higher pressure per square inch than is developed at the larger piston *a*.

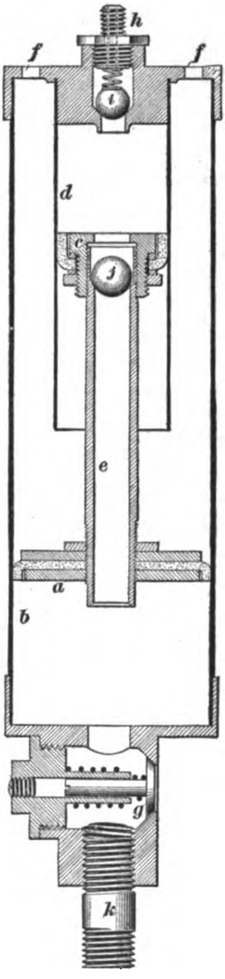

FIG. 28

57. The operation of the spark-plug tire pump is comparatively simple. On the downward stroke of the engine piston (either the suction or the working stroke), a partial vacuum is formed in the pump cylinder *b* beneath the larger plunger *a* and the pump pistons are forced downwards by atmospheric pressure through the openings *f* in the top of the pump cylinder. At, or about, the time that the pump plunger *a* reaches the bottom of its stroke, the breather valve *g* opens and allows fresh air to be drawn into the engine cylinder. This fresh air from the engine cylinder flows through the hollow rod *e* into the space in the inner cylinder *d* above the small plunger *c*, at the beginning of the compression stroke of the engine piston. The plungers are forced upwards during this stroke and the air in the inner cylinder is pumped into the tire by way of the tire hose connection *h*. A ball check-valve *i* prevents air from flowing back into the pump from the tire, and a similar check-valve *j* prevents air from flowing from the inner cylinder back into the outer one. The pistons of the pump are fitted with cup-shaped leather plungers, as shown. Different sized nipples *k* can be secured from the makers of this pump to correspond to the different sizes of spark plugs.

It is claimed by the makers of the Dewey pump that no gasoline vapor from the engine cylinder reaches the pump on account of the amount of pure air taken in through the breather valve.

INFLATION FROM STORAGE TANKS

58. Storage tanks containing compressed air are usually found in all the better garages in the large cities. The air is pumped into the storage tank by an air compressor, which may be belt driven, or driven by a gasoline engine, or by an electric motor.

There are on the market small storage tanks for tire inflation that may be carried in the automobile. Such tanks, when empty, may be exchanged for full ones at various supply depots throughout the country. If cost is no consideration, the use of portable storage tanks is ideal for ease of inflation. However, as the air or carbonic-acid gas is stored in the tank under great pressure, extreme care must be exercised not to inflate the tires too much. It is advisable always to use a tire pressure gauge when inflating from a storage tank. Each portable tank will usually inflate from two to twenty-five tires with one filling, depending on the size of the tires.

The Prest-o-Tire tanks, which are of this type, are each charged with 5 pounds of liquid carbonic gas at a pressure of 900 pounds per square inch. If this gas is allowed to escape too rapidly the rapid decrease in pressure causes it to freeze, forming a snowy substance.

PUMP CONNECTIONS AND PRESSURE GAUGES

59. Tire Pumps Fitted With Gauges.—There are on the market tire air pumps that have a pressure gauge incorporated to indicate the pressure within the tire. When such a pump is used, the hose connection to the tire air valve must be constructed so that the tire air check-valve can be pushed and held off its seat. If this kind of a connection is not used, the pressure gauge will register the pressure to which the pump compresses air, instead of the pressure existing in the tire.

60. Pump Connections to Tire Air Valves.—In Fig. 29 are shown two common types of air-pump connections. The one shown in (*a*), known as the *Perfection coupling*, has the outer casing *a* threaded internally to fit the outside thread at the end of Schrader valve stems. A fiber washer *b* makes a tight joint against the end of the valve stem and also against the end of the air barrel *c*, to which the hose leading to the source of air supply is attached. Owing to the construction, the outer casing *a* and its locknut *d* can turn freely on the air barrel, so that the hose will remain stationary while attaching or detaching the connection to the tire valve stem.

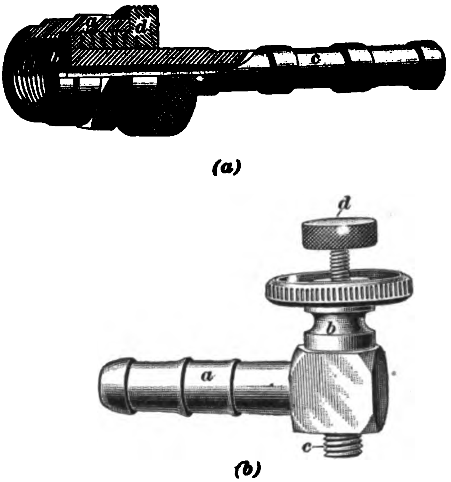

(*a*)

(*b*)

Fig. 29

The form of connection shown in (*b*), known as the *Keno Number 3* coupling, carries the hose, attached to the nipple *a*, at right angles to the tire valve stem. The connector *b* is threaded at *c* to fit the inside thread at the end of Schrader valve stems. A small screw *d* passes through the center of the connector *b*. When this is screwed in, it opens the air check-valve of the tire valve stem, thus adapting this connection to tire pumps fitted with a pressure gauge.

Most pump connections can be obtained with or without a central teat or screw for holding the air check-valve open. The nipples of pump couplings are made to fit tire-pump hose having an internal diameter of $\frac{3}{16}$ inch; larger pump hose is on the market, but is used only in connection with large compressed-air storage tanks.

61. While the Schrader valve stem is today the standard device used on American inner tubes, there are in use many foreign inner tubes having tire air valves that differ from the Schrader valve stem. The foreign valve stems mostly used are the *Michelin* and the *English Dunlop*.

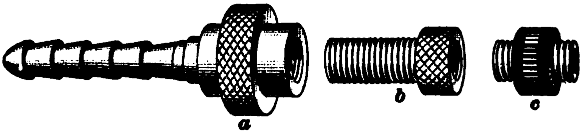

FIG. 30

To permit the same air hose to be attached to any one of the three tire valve stems mentioned, the form of connection shown in Fig. 30 has been placed on the market. In this type of connection, the casing *a* is threaded internally to fit the outside thread of the Michelin tire valve stem; the adapter *b* is threaded externally to fit the casing *a*, and internally to fit the outside thread of the English Dunlop tire valve stem; and the adapter *c* is threaded at one end to fit the internal thread of the adapter *b*, and at the other end to fit the internal thread at the end of the Schrader tire-valve stem.

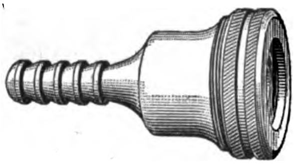

FIG. 31

62. A connection known as the *universal pump connection*, which may be fitted to any valve, is shown in Fig. 31. It is attached to the tire valve by simply pressing it on, when a rubber washer holds it firmly to the valve stem. It is removed by pulling it off. The rubber washer can be replaced by a new one when it is worn out.

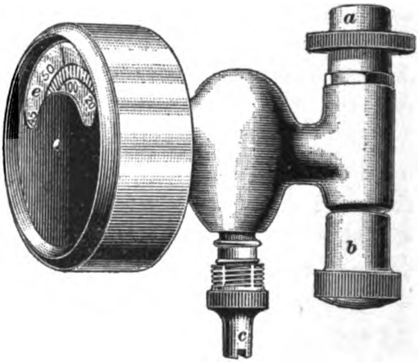

FIG. 32

63. Tire Pressure Gauges.—As insufficient inflation is the most prolific source of tire troubles, and as not even an expert tire man can tell by observation or by feeling a tire whether or not it is properly inflated, a tire pressure gauge should be used not only when inflating tires, but also for periodically testing the inflation pressure.

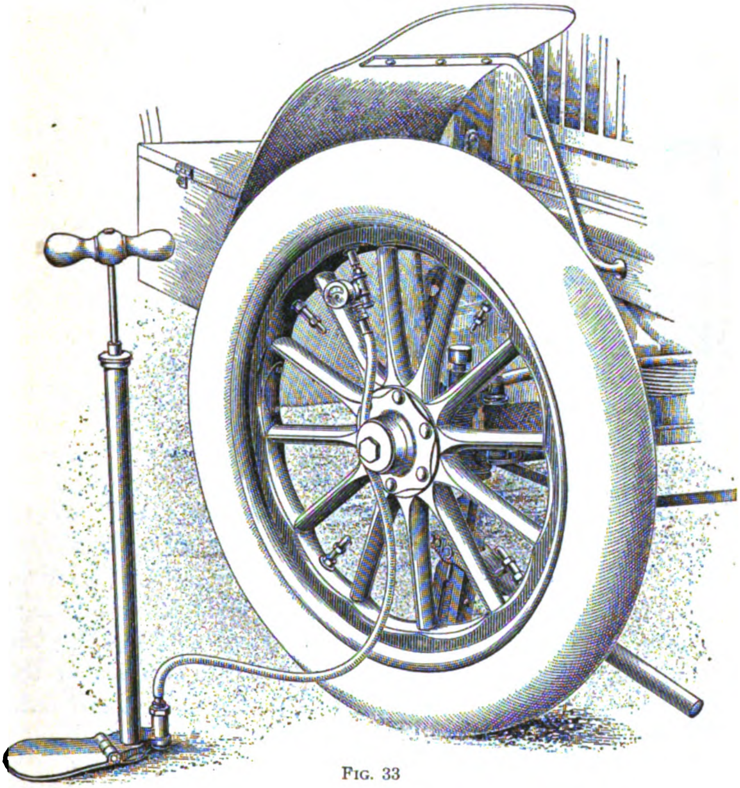

FIG. 33

64. There are several reliable tire pressure gauges on the market. One type of gauge is shown separately in Fig. 32, and in Fig. 33 this same gauge is shown attached to a tire valve and pump. Referring to Fig. 32, the knurled nut *a*, threaded inside to fit the outside thread of Schrader valve stems, is used for connecting the gauge to the tire-valve stem. The hose from the inflating pump is attached to the lower middle part of the gauge after the cap *c*, which is the same as that used on the valve stem of the tire, is removed. By screwing in the knurled head *b* after the gauge has been attached to the tire valve, the small air valve in the valve stem of the tire is forced from its seat. The air valve, which then operates as a check-valve, is in the part of the gauge immediately above the cap *c*. An indicating hand moves over the dial *e* in the cylindrical part of the gauge shown at the left-hand side. The dial is graduated to indicate the air pressure in pounds per square inch.

FIG. 34

65. Tire pressure gauges that are less expensive than that shown in Fig. 32 are on the market. Some of these operate on the same principle but are not provided with a device for forcing the small air valve in the valve stem from its seat. A pump connection like that shown in Fig. 29 (*b*) should be used in such a case.

66. Another simple form of tire pressure gauge is the *Schrader Universal tire pressure gauge*, shown in Fig. 34. A tire is tested by this gauge by simply holding the bottom *a*, in which there is an opening, to the tire valve. The air enters the air chamber in the gauge and forces the indicating sleeve *b* out; the pressure in the tire is read on the sleeve. The indicating sleeve remains at the point to which it has been forced by the air pressure until pushed back in place.

TIRE PROTECTORS AND ANTISKID DEVICES

67. **Detachable Tire Protectors.**—Ever since the advent of the pneumatic tire, inventors have been devising means of protecting it from puncture and at the same time rendering it less liable to side slip. In some cases, the devices have assumed the form of permanent tire treads; in other cases, they have taken the form of detachable protectors that are made in various styles and attached to the tire in a variety of ways.

A typical detachable tire protector, known as the *Woodworth tread*, is shown in Fig. 35. This protector is a steel-studded leather cover that is shaped to fit the tread of a tire and is held on by means of coil springs along each side. Some of the earlier Woodworth treads were held on by means of an endless crimped wire ring. The tread consists of an outer layer of leather, a middle layer of canvas, and an inner layer of thin leather. The studs on the middle portion have heads about $\frac{3}{16}$ inch thick; in addition to these studs there are two rows of thin head rivets on each side. The protector is applied while the tire is deflated and is intended to be held in place by friction when the tire is pumped up.

Although tire protectors undoubtedly reduce the liability of puncture and skidding, they slightly reduce the resilience of the tire and the speed of the automobile.

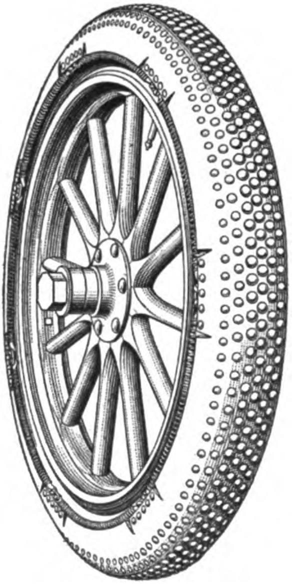

FIG. 35

68. Innerliners.—Inside tire protectors, made up of fabric and rubber and inserted between the tire casing and the inner tube, are sometimes used to reinforce tire casings. These find their best application in worn or injured casings, but they may also be used in new tires, although it is claimed by some that in new tires their advantage is offset by the extra heat and wear that they cause and by their added weight. Several forms of innerliners are on the market.

69. The *Interlock inner tire*, shown at *a* in Fig. 36, is an endless inside casing molded to fit the various sizes of tires. It fits between the regular tire casing *b* and the inner tube *c*, lapping over, or interlocking, on the inside, or next to the rim as shown at *d*.

Another form of innerliner is shown in Fig. 37 (*a*), which is a view of the *K and W Patent Reliner*. Instead of being endless like the Interlock, this reliner is split transversely. Innerliners of this form are held in place between the tire casing and the inner tube by a coating of cement, which may be put on at the factory or when the reliner is applied. They come from the factory rolled up as shown in view (*b*).

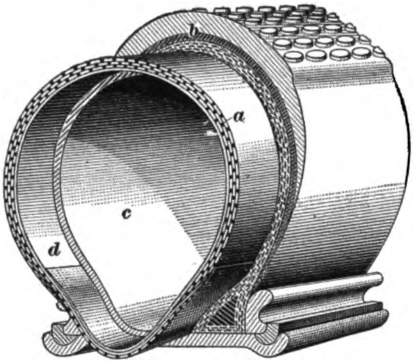

Fig. 36

A third form of innerliner is the endless type that does not overlap along the edge. An example of this form is shown in cross-section *a* in Fig. 38; this particular reliner is sold under the trade name of *Innershu*. It is similar to the Interlock in that it is endless like a tire casing but it has no overlapping flaps; the edges simply taper off at the edge of the casing.

70. Tire Chains.—In Fig. 39 is shown the Weed antiskid tire chain, which is the form of chain that is used exclusively to prevent tires from skidding. However, such a device will not protect them from puncture. The complete chain consists of two circumferential chains, one of which is shown at *a*, which

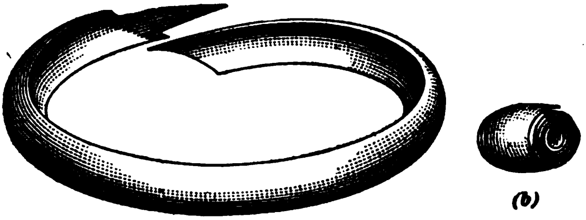

(b)

(a)

Fig. 37

pass around the wheel just outside the rim, and are connected together by numerous cross-chains that pass over the tread of the tire. The ends of the circumferential chains are fastened together by means of very simple fasteners, as shown at *b*, one of which is provided in each chain. Both fasteners lie between the same pair of cross-chains. To put the chain in place, the wheel is jacked up or the chain is stretched out on the ground, or floor, either in front of or behind the wheel, and the wheel run on it. The chain can then be brought over the wheel and fastened in place. To remove the chain, the fasteners are opened and the chain permitted to drop to the ground, after which the wheel is run from it.

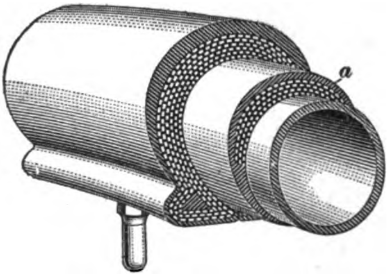

FIG. 38

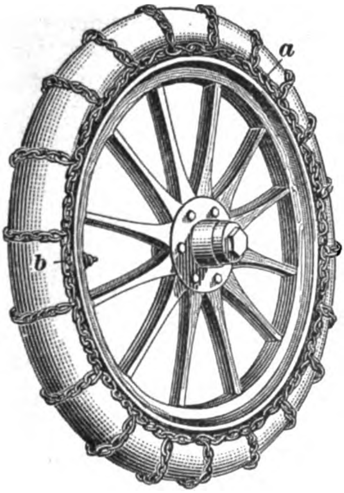

FIG. 39

71. Mud-Hooks.—If an automobile is running on very wet and muddy roads that are not macadamized, the tire chains sometimes do not give sufficient grip to drive the car, in which event the driving wheels spin around and the chains dig into the roadway until the axle or some other part of the car rests on it.

For running on extremely soft mud roads, a mud-hook of the form shown in Fig. 40 will be found very useful. When properly placed, this type of mud-hook projects far enough from the tire to get a good grip on the mud. It is advisable to put at least four hooks on each driving wheel, placing them at equal distances around the wheel. If only one mud-hook is used on each wheel, as is sometimes recommended, it will grip the road until the rotation of the wheel lifts it from the roadway. If the engine is then pulling hard and the clutch is in full engagement, as is the ordinary condition of operation under the circumstances, the driving wheels will spin around until the hooks, one on each driving wheel, come into contact with the roadway again. This will suddenly stop the rotation of the wheels and cause excessive stresses on the transmission system, especially if the clutch is one that holds very tight when in full engagement. The use of four mud-hooks on each wheel will prevent spinning to a great extent and thus prevent any great stresses on the engine.

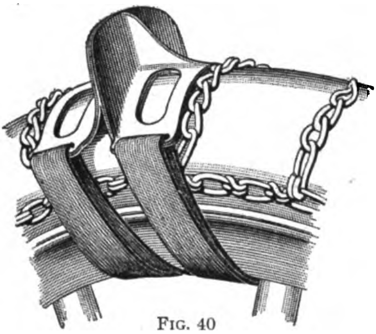

FIG. 40

AUTOMOBILE TIRES

(PART 2)

TIRE DETERIORATION AND REPAIRS

TIRE DETERIORATION

CAUSES OF TIRE FAILURE

1. Under-Inflation.—If an automobile tire is not sufficiently inflated to keep it nearly round when carrying the weight of the car and the passengers, it is subject to rapid wear both alongside the bead at the rim of the wheel, called *rim cutting*, and throughout the body of the tire. The excessive bending of a tire that is not fully inflated has a tendency to cause excessive heating, to separate the layers of fabric, and to work the rubber tread loose from the carcass.

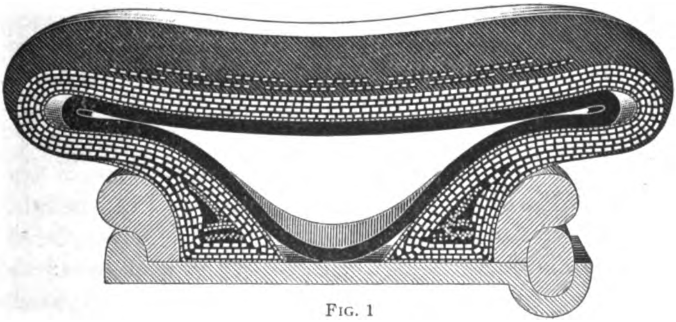

FIG. 1

If a tire is extremely soft on account of complete or nearly complete deflation, it flattens at the bottom where it rests on the roadway, taking a form similar to that shown in Fig. 1. All the load is then practically carried by the clinch of the rim or by the retaining rings or flanges, as the case may be. The result is that the casing is injured by rim cutting where the clinch or retaining rings bear on it, and the inner tube may be cut through in places where it is pressed together just over the clinch or retaining rings. In addition to this, the heads of the tire lugs in a plain clincher type, as well as the valve stem end inside the rubber tube, are liable to be injured, especially if the roadway is very uneven or rocky.

A tire that has become deflated on account of leakage at the valve, a puncture, or a blow-out should never be run. If no spare tire is available, the rim may be wrapped with rope or the car may even be run on the bare wheel rim. While this may spoil the rim, wheel rims are very cheap in comparison to tires.

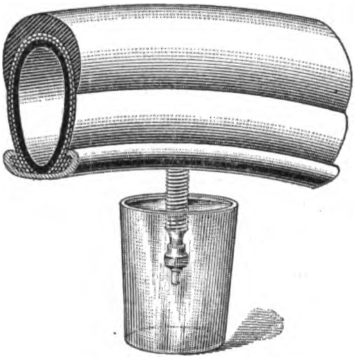

FIG. 2

2. It frequently happens that a tire becomes soft on account of leakage through the air valve and also past the cap that screws on the valve stem. A test for such leakage can be made by immersing the end of the valve stem in water contained in a glass or some other vessel, as illustrated in Fig. 2. The leak is manifested by air bubbles issuing from the end of the valve stem. A little saliva placed on the end of the valve stem will indicate a leak in the air valve after the cap is removed from the stem. If leakage occurs when the cap is in place, it is of course an indication that both the valve and the cap leak. The repair of either one of these parts will generally stop the leak.

A leak through the cap of the valve stem is almost invariably due to deterioration of the small rubber disk packing in the cap, the disks being cut through or wrinkled on account of screwing the cap into place. The simplest remedy for such a leak is to use a new packing disk in the cap.

About the only satisfactory remedy for a leaky tire air check-valve is to replace it with a complete new one. Air check-valves are so inexpensive that it is about as cheap to put in a new one as it is to purchase and carry any of the extra rubber parts. About the only rubber part that can be removed from the air valve and replaced by a new one is the cone-shaped piece of rubber that fits against the end of the valve stem to make an air-tight joint. It is practically impossible to renew the rubber valve seat satisfactorily.

3. The tool shown in Fig. 3 is intended for smoothing and dressing up battered valve stems of inner tubes. The tap *a* is used for cleaning up the thread inside the tubular valve stem; the die *b* for recutting the outside thread on the valve stem; and the facing cutter *c* for smoothing off the end of the valve stem where the rubber packing disk presses against it. The tubular part above *c* slips freely over the end of the valve stem to hold the tool in place when smoothing the end of the stem. The slotted end *d* is used to remove the small air valve from the hollow valve stem and to screw the valve into it.

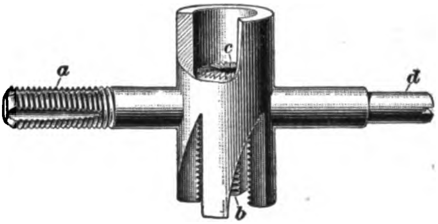

Fig. 3

4. One effect of driving a car with a soft tire is clearly shown in Fig. 4, which illustration has been made from an actual tire, and shows a part of the tire on which the tread has torn loose from the carcass. The only way that such an injury can be repaired is by retreading the tire; since, however, the tearing loose of the tread due to running the tire soft is usually accompanied by serious injury to the tire fabric, it is an open question whether or not it will pay to retread the tire. The advice of an expert tire repairman should be sought and taken.

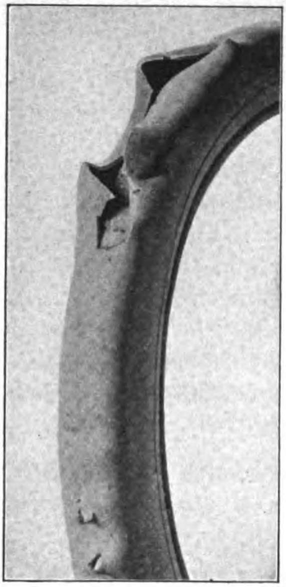

FIG. 4

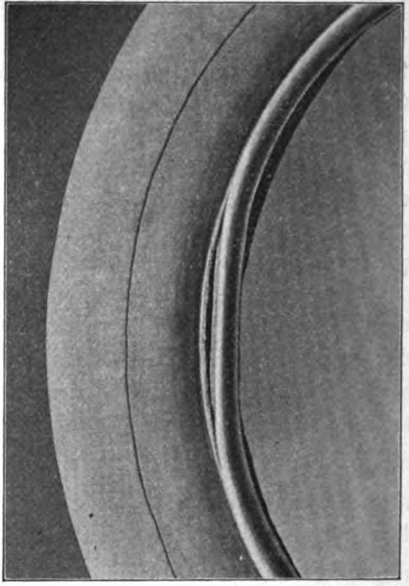

FIG. 5

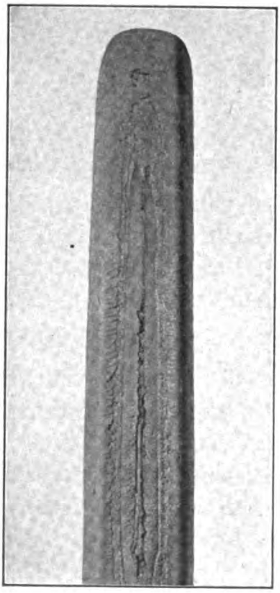

FIG. 6

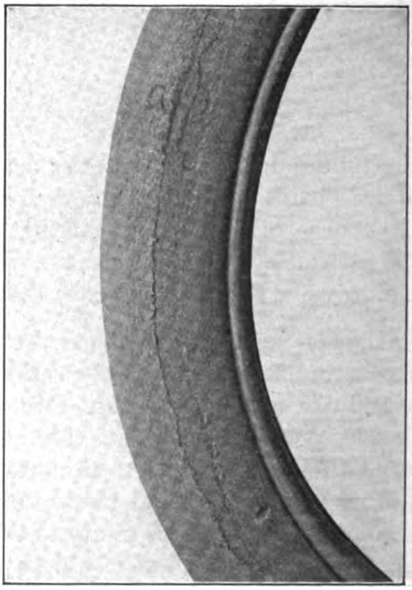

FIG. 7

An example of rim cutting is shown in Fig. 5. Here the side walls of the tire are broken next to the beads. If the damaged part is small, a repair can be made.

5. Improper Driving.—Either skidding the wheels on a dry road by a too powerful application of the brakes or causing the wheels to spin by starting the car too suddenly, is extremely injurious to the tires, because the abrasion of the tires against the road cuts and tears away the tread of the shoe. If the brakes are applied so hard as to prevent the wheel from turning when the car is traveling at considerable speed, the heat due to the sliding of the tire on the road will melt the rubber, and the destruction of the tire will then be exceedingly rapid. The result of thus locking the rear wheels and causing them to slide is shown in Fig. 6, where the casing is shown worn through the tread and part of the carcass.

Continued driving in street-car tracks or wheel ruts will wear off the sides of the tire throughout its entire circumference. A section of a tire that is rut worn is shown in Fig. 7; the exposed tire fabric can be clearly seen.

Turning a corner at high speed causes an excessive side pressure on the tires. This, of course, has a tendency to tear the bead loose from the other portion of the tire. The side pressure may be sufficient to pull the tire from the rim, to bend the axle, or to break the wheel. Sharp corners should be turned at slow speed.

6. Pulling Loose of Tire Fabric.—A tire shoe sometimes fails because the fabric pulls loose along the outside of the shoe just above the angle between the bead and the main body of the tire. When the fabric thus pulls loose a large blow-out of the inner tube generally follows. Unless closely looked for, defects of this kind are sometimes difficult to locate, because as soon as the tire is deflated the torn part of the fabric will spring back against the body of the tire. The fault can be readily detected by bending the bead of the tire down by hand while the tire is off the wheel.

7. Chafing of Inner Tube.—Chafing of the inner tube is a frequent source of tire trouble. The chafing ultimately rubs a hole completely through the tube, so that it becomes deflated. The best, and probably the only way to prevent a tube from chafing is to use a liberal quantity of some such substance as talcum powder, French chalk, graphite, or powdered soapstone. The inner tube should fit the shoe properly; under no condition should it be too large.

8. **Blisters.**—Blisters, which frequently form on the tire shoe, are due to various causes. If a tire is faulty, the kneading action created by rolling over the road sometimes works the outer coating of rubber, that is, the tread, loose from the outer layer of fabric. Another cause of a blister is a cut through the tread. Sand and mud work in through this cut and gradually tear the rubber from the fabric. A blister formed in this manner is always solid because it is filled with mud and sand. Blisters on a tire shoe cannot be remedied very well outside of a tire-repair shop.

9. **Non-Parallelism of Wheels.**—Improper alinement of the wheels, especially of the front wheels, is a common source of undue tire wear, because then the tires, instead of rolling over the road, will roll and slide at the same time. The effect is to grind off the tread and ruin the tire. The appearance of a front-wheel tire injured from this cause is shown in Fig. 8. If it is thought that front wheels are out of alinement, they can be tested by measuring the distance between the two wheels with a stick, both ahead of and behind the axle. The remedy is to correct the disalinement and have the tires retreaded if they are still in a condition to warrant the expense.

Improper rear-wheel alinement is confined to cars of the chain-driven type, and can always be traced to a bent axle.

10. **Improperly Fitted Tire Chains.**—In order to prevent undue wear from tire chains, they should be adjusted to the tires loosely so that they strike the ground ahead of the tire. If adjusted too tightly they bind and tear the tire as shown in Fig. 9. Worn chains that are reversed will give a similar effect, the sharp edges cutting the tire in a manner similar to tight chains.

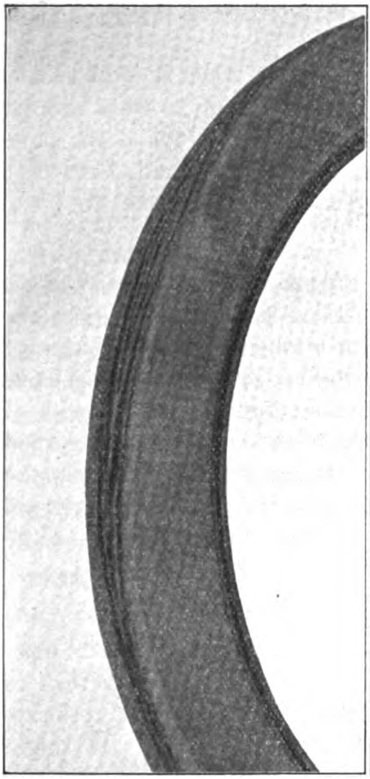

FIG. 8

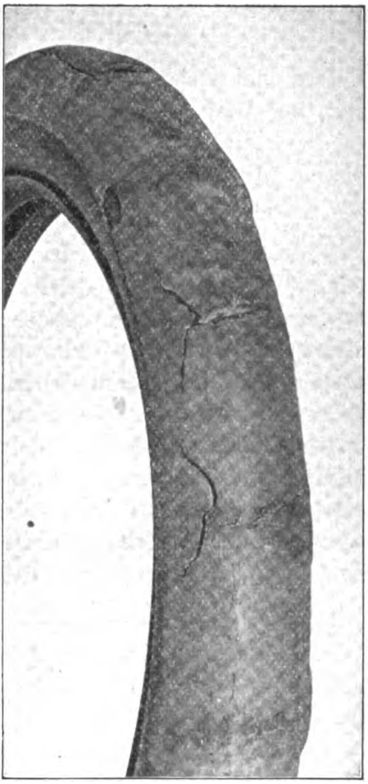

FIG. 9

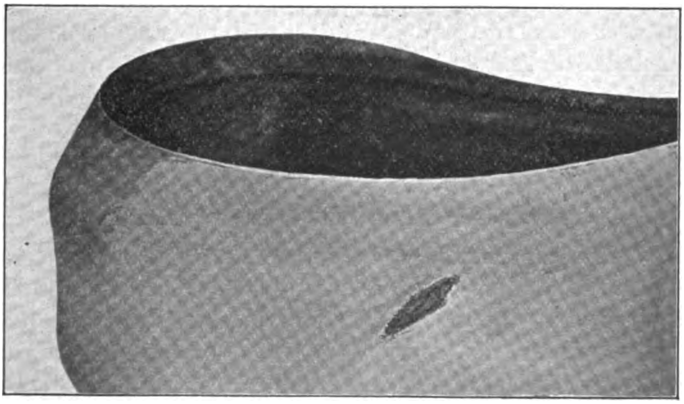

FIG. 10

Tire chains should not be used except when it is necessary and then they should be fitted loosely enough to work around the tires, and thus not press into the tread always at the same places. Under no consideration should tire chains be tied to the spokes of the wheel; they must be left free to creep around the tire.

11. **Stone Bruises.**—A tire running over a heavy stone or similar obstacle may cause a blow-out immediately or the injury may not become known for a long time, but a blow-out sooner or later is practically inevitable. The bruise may leave no mark on the outside of the tread but the fabric inside is broken as shown in Fig. 10, which shows the casing turned inside out. The result of a stone bruise is that ultimately the pressure in the inner tube causes a rupture at the bruised and hence weakened part of the tire, followed by a rupture of the inner tube; such a rupture is called a *blow-out.*

12. **Additional Causes of Undue Tire Wear.**—Aside from the various causes just given there are several other causes that may produce a rapid wear of tires. Permitting tires to stand on an oil-soaked floor will cause the rubber to deteriorate rapidly, because oil has the effect of rotting rubber. Letting a car stand for months unused on inflated tires will stretch the fabric of the tires locally; the car should be placed on props when laid up.

One rear-wheel tire may wear faster than the other on account of the brake on that wheel taking hold better. This may cause one tire to slip on the road while the other wheel holds but little, and hence its tire is but little retarded.

PRESERVATION OF TIRES IN STORAGE

13. If an automobile is to be laid up for some time, say a week or so, it is an excellent plan to take the weight off the tires by putting the machine on four blocks or jacks; in fact, many owners do this every time they come in from a run. In this way, the fabric of the tires is relieved of local stresses and the life of the tires is increased. There is no need of

deflating the tires when the machine is laid up for only a short time.

If an automobile is to be laid up for a long time, say for the winter, it is advisable to remove the tires and inner tubes from the rims. The casings should then be thoroughly cleaned and carefully examined both inside and outside, and all needed repairs made at a properly equipped tire-repair establishment, unless, of course, the operator has the facilities and is capable of making the repairs himself. After removing all rust and dents, the rims should be painted. Various prepared rim paints are on the market, or an excellent rim paint may be made by mixing dry flake graphite with shellac. The tires may then be replaced on the rims after the paint has dried, and slightly inflated. The weight should be taken off the tires by placing four blocks or jacks under the axles; also, the place in which the machine is stored should be dry and not subject to extremes of temperature.

If a machine must be stored in a damp or a very hot or very cold place for a long time, it is advisable to remove all tires to a dry place that has a fairly even temperature. The tubes and cases may be wrapped separately and stored in some cool, dark, dry place.

The greatest enemies of tires and tubes in storage are intense light, exposure to heat in excess of 75° F., and dampness. Guarding against these by selecting a proper place for storage will obviously prolong the life of the tires.

Inner tubes are stored best when slightly inflated, using just enough air in them to retain their circular form. If they are folded, cracks are liable to develop in the folds of old tubes.

ROADSIDE TIRE REPAIRS

TIRE TOOLS

14. **Tire Irons.**—Several tools are required to remove and replace a regular clincher tire with rapidity and ease. For tires up to, say, 3½ inches in cross-section, a pair of tools

of the form shown in Fig. 11 or a pair of tools of the form shown in Fig. 12 may be used. Both tools are called **tire irons.** That shown in Fig. 11 is the *Standard* while that shown in Fig. 12 goes by the trade name of *Eureka*. The latter consists of a handle *a* and tapering blade *b* with rounded corners. This tool is sometimes called a *tire prodder.*

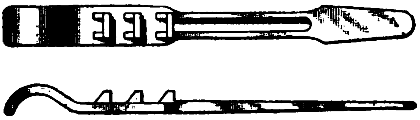

FIG. 11

In the absence of regular tire irons, the two halves of a broken spring leaf make an excellent substitute. Care should be taken, however, to round the edges with a fine file or by grinding, so that there will be no sharp edge to cut the tire or tube.

FIG. 12

15. Detaching Tools.—Although the largest tires can be handled with a pair of tire prodders, or tire irons, the labor of detaching and attaching clincher tires can be lightened by the aid of various other tire tools. Thus, if the casing of a clincher tire is very stiff or adheres to the wheel rim so tightly at the bead that the ordinary tire prodder cannot be inserted between the bead and the clinch of the rim without great difficulty, a *detaching tool* of the form shown in Fig. 13 can be used to force the shoe loose from the rim. This tool is known as the *Springfield tire tool.* The handle, or hand grip, *a* has two arms, one of which extends outwards and toward the left, as shown at *b*, and carries at the end a wooden roller *c* that bears against the spoke *d* of the wheel when the tool is in use. The arm *b* is offset to clear the spoke. The other arm *e* of the handle has passing through it a push piece *f* that bears against the casing just outside the bead. When the handle *a* is pulled away from the wheel, the pusher *f* forces the bead out of the clinch of the wheel rim.

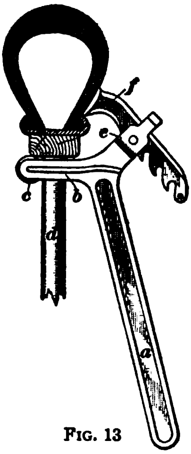

FIG. 13

In Fig. 14 is shown what is known in the trade as the *Continental tire tool,* together with the method of applying it to force the bead of a tire away from the rim to permit insertion of the tire irons.

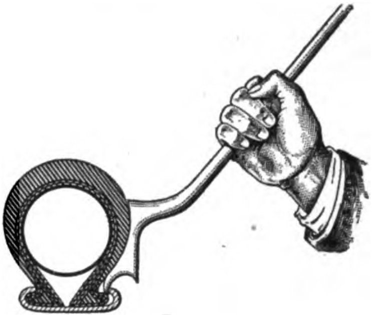

FIG. 14

16. Tire Fork.—Ordinarily, one of the hardest parts of the work in removing a regular clincher tire or replacing it is the lifting of the shoe to permit the removal or insertion of the tire lugs and the inner-tube valve stem. This task is rendered comparatively easy, however, if a properly shaped lever is at hand. There are many tools for this purpose on the market, a very convenient one being the *Michelin tire fork* shown in Fig. 15. The tire fork is applied by inserting the prongs of the fork between the bead of the tire and the clinch of the rim, one prong on each side of the valve stem, and thus lifting the shoe while the stem is being removed from the wheel.

17. Quick-Detachable Tire Tools.—Various forms of tools designed to accomplish the easy removal of quick-detachable tires from their rims are sold in the market. A common tool, which goes by the trade name of *Bryant tire tool,* is shown in Fig. 16 (*a*). This tool is used for forcing back the removable clinch, or flange, of the rim while the locking ring is being removed by a screwdriver or some other tool, as shown in (*b*). It is essential that a tool for this purpose be self-locking so that the clinch will remain back while the locking ring is being removed. The one illustrated automatically locks itself when on the full inthrow as shown. Others are constructed on the

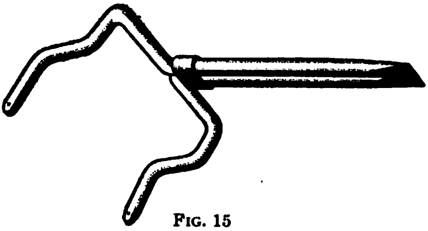

FIG. 15

principle of the screw, ratchet, or togglejoint, all of which are self-locking.

A tool of the form shown may also be used for forcing the rusted bead of a tire away from the rim, on either a quick-detachable clincher tire or a regular clincher tire.

HANDLING OF CLINCHER TIRES

18. Removing the Inner Tube.—One of the most important things to bear in mind when removing or replacing a tire is that the inner tube must be handled with great care. This tube is made of rubber without any strengthening fabric, and may therefore be easily punctured, cut, or torn either by the tools used or by some of the parts that attach the outer shoe to the rim of the wheel. Care must also be taken that the inner tube is not left pinched between any of the clamps, between the air valve and the outer shoe of the tire, or between the different parts of the outer shoe. The tools used for removing and replacing should never have sharp edges or corners, because they will be liable to injure both the inner tube and the shoe.

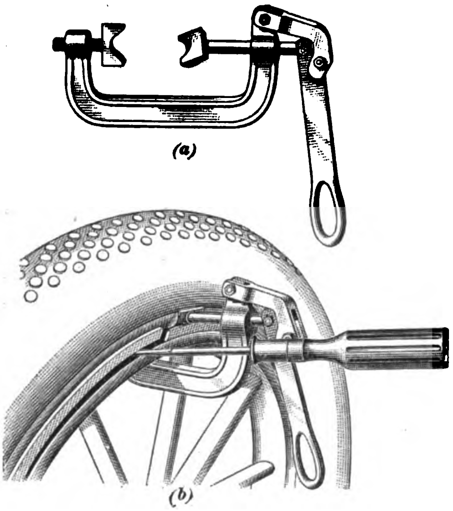

Fig. 16

The ordinary clincher tire used on a solid wheel rim probably requires more skill and care for its handling than any other form of tire. This type of tire is still being used on a large number of old cars and on some new smaller cars, notably the Ford Model T, hence, the method of handling it will be given somewhat in detail, especially as the instructions may also be largely applied to quick-detachable tires.

19. In order to remove a tire, first jack up the wheel so as to relieve the tire of its load; then deflate the tire, if deflation has not already occurred, either by pressing inwards on the small solid valve stem that appears in the middle of the valve, or preferably by removing the valve insides.

Next, unscrew the large nut from the large tubular stem of the valve, and push the stem in through the wheel rim. If the stem sticks in the wheel rim, it can be forced in by pressing with a piece of wood against the valve stem. In case tire lugs are used, their nuts should be loosened and the lugs should be pressed inwards in the same manner as was done with the valve. After this is done, insert the thin point of one of the tire prodders between the tire and one edge of the rim, as illustrated in Fig. 17, pushing the tire over with the hand or foot. In case no tire prodder is at hand, the tire can be loosened by placing a rounded block of wood against the side of the shoe and striking the block with a hammer.

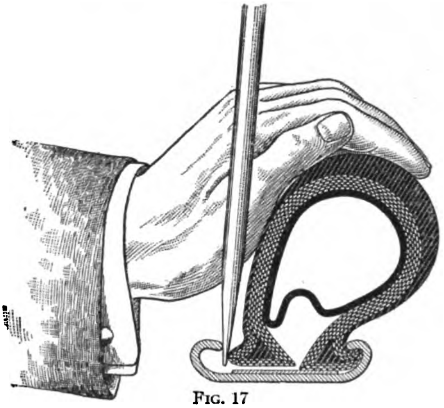
FIG. 17

Next, insert both prodders about 1 foot apart under the bead of the tire on the side of the wheel opposite the valve of the inner tube. Bring the handles of the tools toward the hub of the wheel so as to pry the bead out of the rim, as shown in Fig. 18, moving the tools nearer together if necessary. In case the tire is very stiff, one of the tools can be held by one's knee or foot, so as to keep the

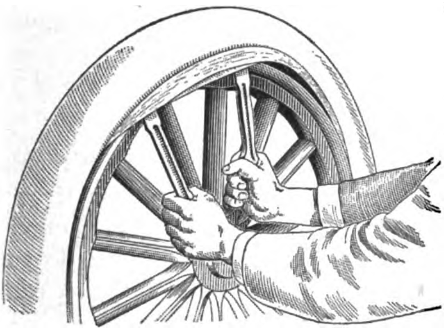
FIG. 18

bead out, and the other tool worked along by hand away from the first tool until enough of the bead is removed to remain out of its own accord. The remainder of the bead can then be worked off with one of the tools or by hand.

After removing one side of the tire from the rim, grasp the edge of the tire with one hand at the point farthest from the valve stem of the inner tube, and pull the tire out from the rim far enough to insert the other hand to pull out the inner tube. The inner tube should be removed carefully on account of its weakness. If it sticks to the casing, it should not be pulled very hard. The tube sometimes adheres tightly to the casing on account of having been heated by fast running, or because some cement on a patch has been allowed to get between them. If the inner tube sticks so tightly that it cannot be safely pulled out, it can be loosened with a little gasoline. The tube should be removed as soon as possible after the gasoline has been put in, so that the latter will not have time to act sufficiently on the rubber to injure it seriously. The gasoline

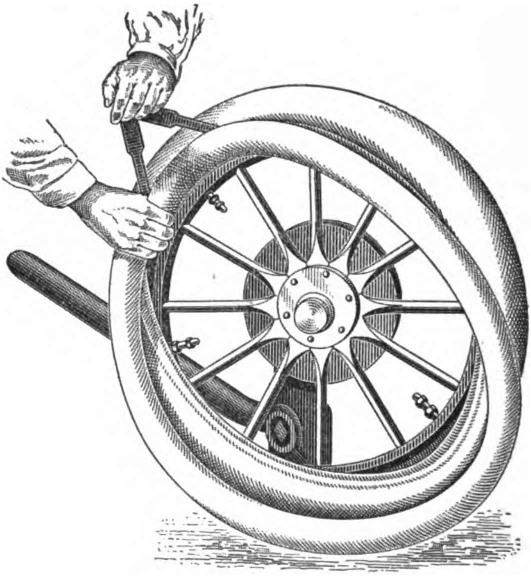

FIG. 19

will generally leave the tube somewhat sticky. After all the inner tube except the portion just at the valve stem has been removed, the two tire prodders can be inserted as far as possible under the shoe, one tool on each side of the valve stem and between the casing and inner tube. The outer ends or handles of the tools can then be brought together as in Fig. 19, and the tire lifted up with one hand on the tools while the valve stem is removed from the rim with the other hand.

20. A good plan in case the puncture can be located before the inner tube is completely removed from the shoe is to mark the tube where it is punctured and then inspect the shoe in the neighborhood corresponding to the puncture in the tube for the purpose of locating a tack or nail that may have caused the trouble. This inspection can be made by rubbing the hand around the inside of the shoe. If this is not done, another tube that is put into the shoe will be immediately punctured by the tack or nail still remaining in the shoe. If a nail or a piece of wire is found sticking through the casing for some distance, the tube should be inspected for two holes, opposite each other, caused by the nail piercing both sides of the tube.

A small hole can be located by inflating the tube and then immersing it in water. However, the tube should not be inflated enough to stretch it much; if inflated too much it will suddenly expand at one point and is liable to burst if not caught quickly in the hand. It may be necessary to stretch the tube by hand in order to open the hole so that air will escape.

Before putting in another tube, the inside of the shoe should be cleaned so as to remove all loose dirt and sand. Both the tube and the inside of the shoe should be liberally coated with talcum powder, French chalk, powdered soapstone, or flake graphite, before putting them together, and the inner tube should be deflated as nearly as possible. This can be done by rolling up the tube, beginning at the part farthest from the air valve, which must be either pressed down during the operation or removed in order to let the air escape.

21. Removing a Clincher Casing From Rim.—If the casing, or shoe, of a clincher tire is to be completely removed from the wheel, the tire clamps, provided any are used, must be taken out after removing the inner tube. The clamps can be removed after prying the tire away from the rim, as when removing the valve stem of the inner tube. The complete removal of the shoe is then generally easily accomplished.

22. Care of Rims.—If a tire that has been in place for some time is removed, it will be found that the rim is more or less rusted. The rim should therefore be cleaned and smoothed before the tire is put on again. The rust can be removed by scraping. Especial care must be taken to see that the clincher part of the rim, into which the shoe bead fits, is thoroughly clean. Rust collecting under the clinch may prevent the bead from going entirely into the proper position. After the rust is scraped off, the rim should be smoothed with a fine file. Emery cloth can also be used to advantage for smoothing the rim.

The edge of the rim that bears against the tire just outside of the bead should be carefully smoothed so that it will not cut into the tire. When the rim is very rough in the middle, and the form of the shoe is such that the inner tube bears against this portion of the rim, a piece of ordinary cotton tape may be wrapped circumferentially around the rim so that the inner tube will bear against it. The end of the tape can be secured with a small quantity of rubber cement. A protective paint should be put on the rim to prevent it from rusting.

23. Replacing a Shoe.—A new shoe and inner tube can be put on in two ways. One way is to put the tube inside the casing first, and then put them both on together; the other way is to put one bead of the casing on the rim first, and then put the inner tube in place, as when putting a new tube in a tire that has had only one side removed from the wheel. It is probably better for the novice to adopt the latter method, because there is less danger of injuring the inner tube than when both parts are put on together. Putting the first bead of the shoe on the rim is generally a simple operation. New shoes are usually painted inside with talcum or some other similar substance, so that it may not be necessary to put in any talcum powder, French chalk, powdered soapstone, or flake graphite, when putting in the tube.

24. Inserting an Inner Tube.—To insert an inner tube, first lift the shoe at the opening in the rim through which the air valve passes in the same manner that it was lifted to remove the valve of the old tube. Then insert the valve of a new tube in the hole through the rim, and work in the remainder of the tube by hand, taking care not to twist it. As soon as the inner tube has been put in the shoe it should be inflated slightly.

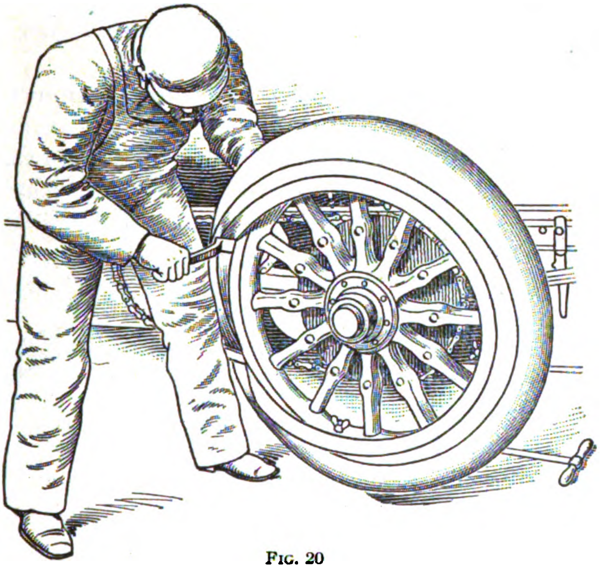

FIG. 20

This inflation should be only enough to give the tube its circular form as nearly as possible. Then force the bead back into the rim, using the tools in the manner illustrated in Fig. 20. The tool must not be inserted far enough to catch and pinch the inner tube. The air valve should be pushed from the wheel center outwards while forcing the tire in place near it.

The tire can sometimes be replaced more rapidly and easily by sitting down opposite the wheel and pressing against the side of the tire at the bottom of the wheel with both feet, at the same time striking the inner side of the bead of the tire lightly with the hammer. As soon as the tire is in place, the valve stem should be pushed in to see that the tube is not caught under it. The inner tube can then be inflated up to about full pressure. The nut on the valve stem should then be tightened almost as tight as it is to be finally, after which the tire may be fully inflated and then the nut fully tightened. After the car has been run a day or two, the nut should be tightened once more.

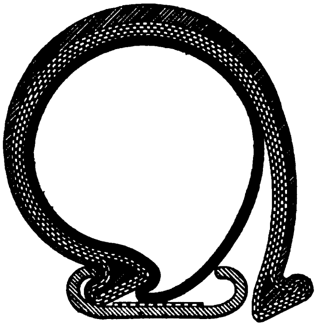

Fig. 21

25. Pinching Inner Tubes. If proper care is not exercised in putting a tire in place, an inner tube is liable to become pinched, and hence injured, or a valve stem may become caught. Two conditions that may cause injury to an inner tube are shown in Figs. 21 and 22.

In Fig. 21, a part of the inner tube is shown caught under the edge of the tire on the side that is on the rim, while the other edge of the tire is free from the rim. This condition may occur when the shoe and the inner tube are put together before placing them on the wheel rim; or, it may be the result of improper handling of the tire tools, especially the prodders, by means of which the tube may be pushed under the shoe. It is not likely to occur, however, if the tube is properly inflated.

In Fig. 22, a part of the inner tube is shown pinched under the valve stem. The operator should always pass his hand around the inner tube after it has been inserted and is slightly inflated, in order to straighten it out before putting the second bead of the tire shoe in place.

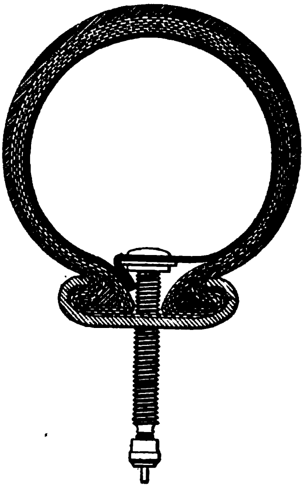

Fig. 22

HANDLING OF QUICK-DETACHABLE TIRES

26. Removing the Tire From Rim.—Tires mounted on quick-detachable demountable rims can usually be removed from the rim before demounting the rim from the wheel as well as after it has been demounted. The operation is the same in each case, except, of course, in the first case the wheel is in a vertical position while in the second it is generally lying flat.

The method of removing a Firestone quick-detachable tire without demounting the rim is shown in Figs. 23 to 28. The wheel being jacked up, first deflate the tire and push the valve stem into the tire as far as it will go in order to release the pressure of the bridge clip. Next, push the side ring inwards, as shown in Fig. 23, until the locking ring *a* is free to be pried out and then place a nut *b*, or other small object, between the two rings, thus holding the clincher ring back. The locking ring can then be pried out of its groove by a screwdriver inserted in the slot near the end of the ring and removed with the hands, as shown in Fig. 24.

FIG. 23

FIG. 24

After the locking ring has been sprung out of its groove, the side ring can be taken off, as shown in Fig. 25. The tire should then be removed by swinging it out sidewise, Fig. 26, commencing on the side of the wheel opposite from the valve and lifting it out at the valve so as not to injure the valve stem. After the tire has been detached from the rim, the inner tube may be removed from the casing.

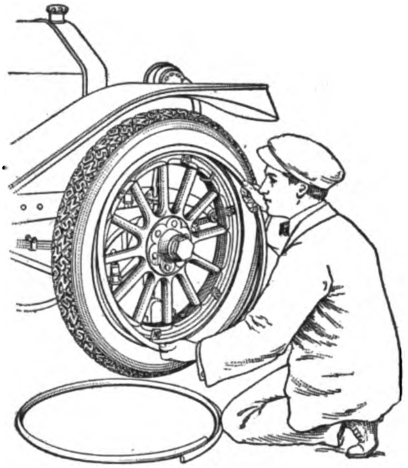

FIG. 25

A quick-detachable tire is replaced on the rim by simply reversing the operations necessary for its removal, care being taken not to damage the valve stem in the inner tube.

27. Demounting the Rim From Wheel.—The method of demounting any particular make of demountable rim from the wheel is usually self-evident and can generally be ascertained after a few minutes' examination. The work necessary to remove a rim, of course, depends on the manner in which it is held on the wheel, but in most cases it consists in loosening a number of nuts and clamps.

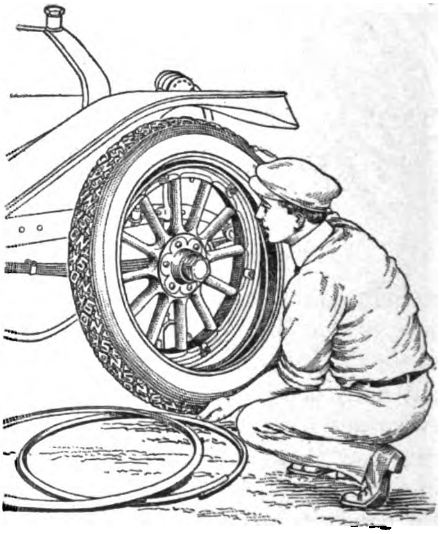

FIG. 26

Fig. 27 shows the first operation necessary in removing a Firestone rim, with the tire attached, from the wheel rim. The six clamp nuts *a* are loosened and the clamps *b* are slipped back so as to clear the rim and clamping ring. The nuts should be tightened sufficiently to hold them in that position; or, the clamps may be removed entirely, if this is considered more convenient. The rim can then be lifted from the wheel as in Fig. 28, care being taken to have the tire air valve *a* at the top so that it will be lifted out last. In many cases the dust cap must be removed from the tire air valve, before the rim can be taken off the wheel.

FIG. 27

28. When mounting a demountable rim on the wheel, turn the wheel so that the valve hole in the felloe is at the top. The valve stem may then be inserted and the lower part of the rim swung into place. The clamps should be tightened by first giving each nut one or two turns with the wrench and then going around the wheel again, tightening up fully each nut.

FIG. 28

ROADSIDE INNER-TUBE REPAIRS

29. Cement Patches.—Although it is not generally advisable to attempt to repair a puncture of the inner tube on the road, it may be done in case of necessity. Tire patches for such repairs are obtainable in the market, and they are put on with proper repair cement. The patch should be large enough to extend 1 inch or more beyond the hole on all sides.

Before putting on a patch, the part of the tire that is to be patched should be carefully cleaned by rubbing coarse emery cloth or sandpaper over it. Clean gasoline is then used to clean the tube in this locality. No water or other moisture should be allowed on the parts to be repaired.

After cleaning, the rubber cement is spread thinly over both the patch and the part of the tube that is to be repaired. The cement should be allowed to dry until it becomes thick in consistency, or *tacky*, as it is called, which means that it is very sticky when one's finger is applied to it. Some cements require an application of acid or so-called *acid-cure solution* and do not have to dry to the same extent.

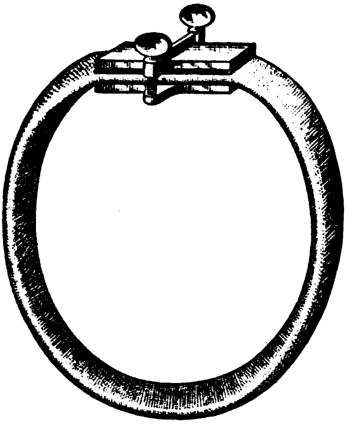

FIG. 29

The patch is then laid on, but care must be taken not to enclose a bubble of air under it. Probably as good a way as any is first to put down one corner of the patch while holding the rest up from the tube, and then to bring the patch down gradually, as would be done if it were rolled down with a cylindrical tool. After the patch is in place, it should be held down hard against the tube. This can be done by laying the tube on a flat surface and then placing a weight on the top of the patch, or a clamp like that shown in Fig. 29 may be used to hold the patch and the tube together. If the clamp is used, one of its inner faces should be covered with thick felt or thick cloth so as not to injure the tube. The length of time required for the cement to set depends on the kind that is used. Ordinary cement will probably require at least 10 minutes.

A patch put on in this manner will not hold nearly so well as a properly vulcanized repair, because the heat due to running the car at high speed will soften the cement and the bending of the tire will aid in working the patch loose. A patch put on with cement will hold better in cold weather than in warm weather.

30. No-Cement Patches.—A quick repair of a puncture of an inner tube can be made by means of the *no-cement patch*, or the *self-cementing patch*, which can be applied to the tube without either cement or acid. When using a patch of this kind, it is only necessary to buff the tube around the puncture with emery cloth and clean with gasoline. The linen cover may then be removed from the patch and the gum side moistened with gasoline, after which the patch may be applied to the tube. It should be pressed down firmly and kept under a weight for a few minutes, when the tube can again be put in service. Various sizes of no-cement patches can be obtained and the one best suited for any particular puncture used.

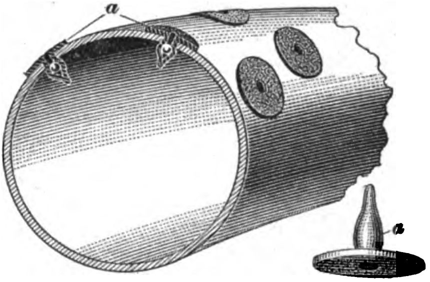

FIG. 30

31. Self-Vulcanizing Rubber and Puncture Plugs.—Punctures in inner tubes can also be repaired by making use of *self-vulcanizing*, or *self-curing*, *rubber*, also sometimes called *self-curing cement*. This is a plastic rubber, sold under various brand names, such as Michelin Mastic, Goodrich Plastic, U. S. Heal-a-Cut, etc. It is applied to a puncture by rolling a small piece between the thumb and forefinger until it takes the shape of a collar button and then forcing the neck of the button through the hole in the tube, which has been thoroughly cleaned around the hole beforehand, and coated with one or more coats of patching, or self-vulcanizing, cement. Full directions for the use of the various plastic rubbers are given on the cans in which they are sold, and these directions should be followed carefully in each case.

Various forms of inner-tube plugs are also used for repairing small punctures caused by nails or similar objects. One form of puncture plug, namely, the Goodrich Permanent Puncture Plug, is shown in detail and applied to an inner tube in Fig. 30. It is simply a soft rubber plug *a*, shaped like a collar button, the stem of which contains a ball. To mend a puncture, the neck of the button is slipped through the hole in the tire, and the ball prevents the plug from coming out. Several of the plugs are shown applied to an inner tube.

32. Splicing Inner Tubes.—Sometimes an inner tube will become so badly worn or ruptured at some point that it is impossible to repair it in the usual manner by means of patches and cement. In such a case a repair can be made by removing the damaged portion of the tube and putting in a new section by means of splicing. The process of making a splice is more difficult than that of making an ordinary repair and, hence, requires the services of an experienced repairman.

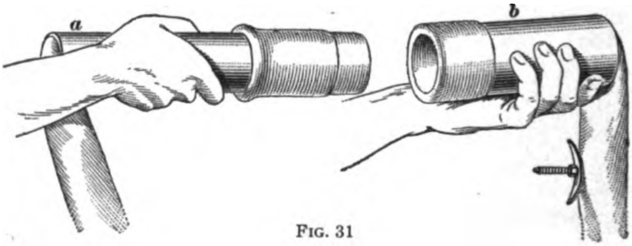

FIG. 31

33. Splices are of two kinds, namely, the vulcanized splice and the cold, or acid-cured, splice. The former is made only in the manufacturing plants where the necessary facilities are at hand, but the latter, or acid-cured, splice can be made with a few tools by a repairman. In making an acid-cured splice, the ends of the tube are brought together by means of two cylinders, called *splicers*, through which the tube ends extend, as shown in Fig. 31. The tube ends are turned back over the ends of the splicers, that on the smaller cylinder *a* being doubled back on itself, as shown. The ends of the tube are tapered with a sharp knife and the surface roughened in the same manner as when preparing for a patch. The surface of the tube ends is then cemented and allowed to dry and the end of the smaller splicer is inserted into the larger one *b* until the end of the tube on the smaller splicer butts against the tube end on the larger splicer. The curing solution is now applied and the splice immediately made by drawing the end of the turned back tube on *b* over the end of the tube on the smaller splicer *a* and wrapping tightly with a rubber band. The rubber band should be kept on 15 or 20 minutes, when the tube will be ready for service.

34. Leaks in spliced joints in inner tubes are repaired in accordance with the kind of splice. For instance, if a splice that has been vulcanized leaks, it can be repaired by vulcanizing, but an acid-cured splice must be taken apart, if possible, and made over again. If this cannot be done, a new section must be spliced into the tube, cutting out the part containing the defective splice.

ROADSIDE REPAIRS TO CASINGS

35. Inside Casing Patches.—If a tire casing is cut through so as to make a hole of considerable size, the inner tube may be prevented from blowing out through the hole by putting some kind of a patch on the inside of the shoe. Patches for this purpose, known as **inner-shoe patches,** or **sleeves,** can be obtained in many styles. They are usually made of rubber-filled fabric.

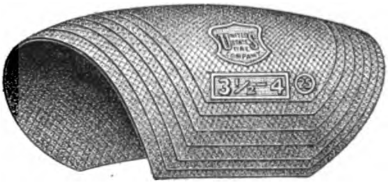

FIG. 32

One style of patch is shown in Fig. 32. This patch is composed of several plies of fabric, shaped to fit the different-sized casings. The patch is built up in such a manner that the outside layer of fabric is smaller than the inside layer; hence, the edge of the patch is quite thin, thus making a smooth joint with the inner tube. This style of patch is held in place by cement.

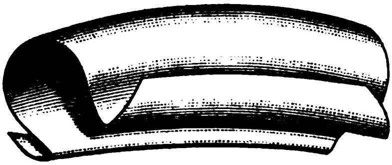

FIG. 33

A common form of inside patch is shown in Fig. 33. This patch is vulcanized and molded to shape and the outside ply of fabric is made extra wide so that it can be inserted between the beads of the tire and the clinches of the rim. Other patches of this form have metal clinches that are attached to each side of the patch.

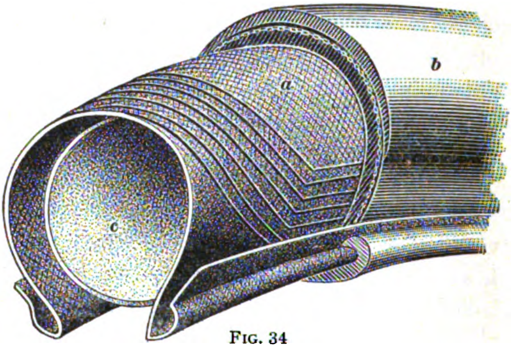

FIG. 34

A patch in place inside of a casing is shown in Fig. 34. The patch *a* fits between the casing *b* and the inner tube *c*; the flaps on each side help to hold the patch in place.

36. Outside Casing Protectors.—If the cut in the shoe is so large that there is danger of the shoe tearing open when inflated, it is advisable to put an outside protector patch over the tire. Protector patches, also called *manchons*, made for this purpose, are on the market. One form of patch is provided with eyelets and a lace, so that it can be laced into place, as illustrated in Fig. 35. This patch is made of mineral chrome leather, and the laces are of rawhide. Probably the best protector is made of rubber and woven fabric, in a manner somewhat similar to the tire shoe. It is also usually held in place by rawhide laces.

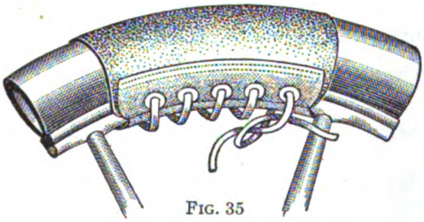

FIG. 35

A leather emergency patch that is attached to the clincher rim or clincher side rings by a patent clip device is shown in place on a tire in Fig. 36. The patch *a* is held in place by the clips *b*. This patch is manufactured by the 20th Century Tire Protector Company. In order to secure the most satisfactory service from outside patches of the type shown in Fig. 36, it is necessary that the correct size to fit the tire be used.

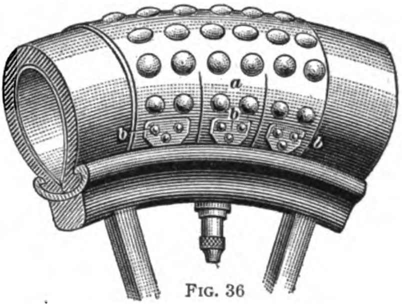

FIG. 36

37. A fairly good protector patch for temporary use can be made from a section of an old tire shoe. The beads should be cut off if the old tire is of the clincher type. Holes can then be punched for the lacing.

If the cut in the casing is comparatively small and deep, as when made by a small piece of glass, it should be probed with the blunt end of some small instrument as soon as it is discovered, in order to ascertain whether or not the glass still remains in it. Frequently, a small piece of glass will embed itself in the rubber near the surface of the tread as the wheel passes over it, and then gradually work its way through the shoe and puncture the inner tube as the wheel travels along the road. The glass should be removed immediately.

38. Cuts and Blisters.—Cuts of any kind, as well as blisters, on the tire shoe should be repaired at the earliest possible moment. If the cut is left open, a sand blister, also called a *mud boil*, is almost certain to form. Although it is hardly possible to make a durable repair of a cut while on the road, it can be remedied to some extent. If the cut is small, it can be temporarily repaired by filling it with rubber cement and then binding a piece of adhesive tape around the tire over it. If the cut is rather large and deep, it may be protected by forcing a piece of rubber patch into it and then cementing this patch in place. After the cement has set, the patch can be trimmed down smooth with the surface of the tire, and the tire then wrapped with tire tape. Neither repair is permanent, and hence a vulcanized repair should be made as soon as possible.

39. The various kinds of plastic rubber mentioned in connection with the repair of inner tubes are also used for filling small cuts in casings. These rubber preparations are self-drying and self-curing, and if a cut is filled at night, the tire may be safely used by morning. These plastic rubber preparations prevent the exposure of the tire fabric to the disintegrating effects of moisture and grit, and prevent the formation of sand blisters.

CARRYING INNER TUBES

40. In order to carry an inner tube so that it will not be abraded and cut, it should be fully deflated and then closely folded or rolled and put into a casing, or box. It can be deflated by rolling it up while the valve insides is removed, replacing this after the tube has been fully deflated. The successive steps of folding a tire into a bundle are illustrated in Fig. 37. It is best to cover the valve stem with an ordinary rubber finger cap, or with a cap of some other material, such as chamois skin or cloth. Two of the views of the illustration show the valve stem covered in this manner. An oilcloth bag makes a suitable covering for the entire tube after it is folded. The tube should by no means be carried loose among tools, nor should it be placed where oil or gasoline can get on it.

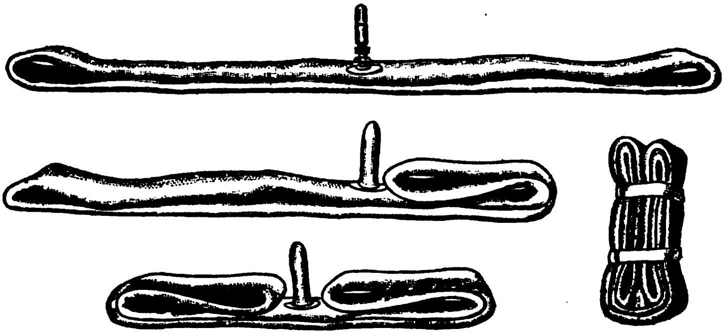

FIG. 37

VULCANIZED TIRE REPAIRS

PORTABLE VULCANIZERS

41. The process of vulcanizing rubber, as already referred to in connection with patching inner tubes and shoes, consists in heating the rubber to a temperature sufficient to make it change from either the gummy or the plastic state, as the composition may be, to the condition that is found in a new tire casing, or tube. In other words, in reference to tire work, **vulcanization** is the process of heating crude rubber and sulphur in combination until the mass has been brought to a state in which it is both elastic and durable.

This process is employed in both the manufacture and repair of automobile tires, but it is with the latter only that the automobile owner, driver, or repairman is interested and it alone will be dealt with here.

In the repair of tires, a patch on the inner tube or the rubber reinforcement in a cut or blow-out in a casing is vulcanized in order to make the repair a permanent part of the tire. The heat for the vulcanizing apparatus, or vulcanizer, is generally supplied by electricity, steam, or gas. The temperature to which the rubber is raised by the vulcanizer should probably never exceed 250° to 275° F.

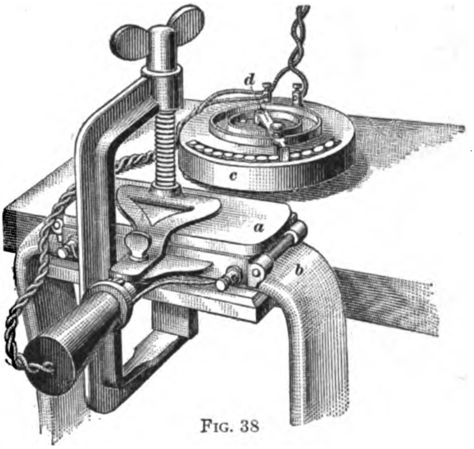

FIG. 38

42. Various forms of small portable vulcanizers that can be used by the automobile owner or driver for repairing tires on the road or in the garage are found on the market. One of the most popular forms is the **electric vulcanizer,** an example of which is the Shaler, type B, shown in Fig. 38. The vulcanizer *a* is shown clamped in place on the inner tube *b*, in which a puncture repair is being vulcanized. This vulcanizer may be operated by either direct or alternating current. The temperature is controlled by a rheostat *c*, by means of which the resistance to the passage of the current can be regulated by shifting a lever *d*. The current coming to the vulcanizer passes through the rheostat and then through the resistance coils of the vulcanizer, thus producing the required temperature for the vulcanizing process.

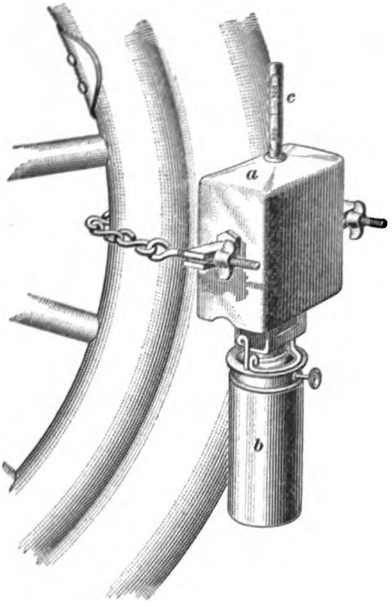

Fig. 39

43. The vulcanizer shown is made with one side flat and the other side concave. The flat side is to be applied to inner tubes and the concave side to tire casings. Casings may be vulcanized by simply clamping on the vulcanizer without removing the tire from the wheel. A thermometer is provided to indicate the temperature of the interior of the vulcanizer. The advice of the manufacturers of the apparatus as to what temperature should be used when vulcanizing should be followed as closely as possible.

44. The first vulcanizers used for preparing rubber were **steam-heated vulcanizers.** These were of the large stationary form and steam was used because the temperature could be controlled readily by regulating the fire under the boiler. This type of vulcanizer is now used almost exclusively in repair shops and large garages where a considerable amount of tire repairing is done. Pressure gauges instead of thermometers are used for determining the temperature in the large vulcanizers, the steam being kept at the pressure corresponding to the required temperature during the process.

Small steam-heated portable vulcanizers are sometimes used in the same manner as portable electric vulcanizers for making small repairs on the road or in the garage. The steam is generated by means of a gasoline, or alcohol, lamp. Such a portable vulcanizer is shown in Fig. 39 clamped to a tire casing in the proper position for use. The body *a* of the vulcanizer contains water which is heated by the alcohol lamp *b*. A thermometer *c*, fixed in the body of the instrument, indicates the temperature of the steam. The surface of the vulcanizer that is to be used in vulcanizing tire casings is concave while the opposite surface, or the one to be used on inner tubes, is flat.

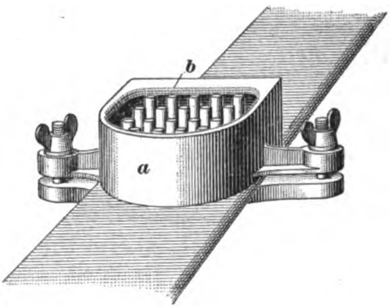

FIG. 40

45. The Adamson vulcanizer, which is of the **gasoline-heated type,** is shown in Fig. 40. When vulcanizing an inner tube, the vulcanizer is laid flat as shown, gasoline is poured into the body *a* and lighted, and the vulcanizing process begins. In vulcanizing a casing, the vulcanizer is clamped to the casing in a vertical position with the cup *b* at the bottom. The gasoline is then poured into the cup and lighted.

REPAIR OF INNER TUBES AND CASINGS

46. Vulcanizing Inner Tubes.—When vulcanizing, extreme care must be taken not to raise the temperature of the rubber above a certain maximum. If the rubber is overheated, it will become weak, will lose its elasticity, and will be almost certain to crack when bent short. The temperature of the vulcanizer should naturally be somewhat higher than that required in the rubber for vulcanizing it, because there is some loss of heat between the vulcanizer and the tube or casing. It is advisable to lay an inner tube on a piece of soft material, such as thick felt, in order that it may have an even contact or pressure against the vulcanizer, especially when putting on a large patch.

47. On account of the great danger of injuring the rubber tube by overheating, a person learning to use a vulcanizer should experiment on some worthless tubing. He should take care not to overheat the tubing at the first trials, and should then increase the temperature in successive trials until he finds the lowest temperature at which the rubber is vulcanized so that the patch will hold in place firmly and cannot be pulled off by hand, as when put on with tire cement but not vulcanized. The length of time required to vulcanize an inner tube after the vulcanizer has become thoroughly heated varies with the thickness of both the tube and the patch, but it does not generally require more than 15 or 20 minutes. It is necessary to bring the temperature up to a certain mark before vulcanizing will occur. Therefore, there is no need of trying to produce a successful piece of work by using a low temperature and continuing the process for a long period. Dealers in automobile supplies can generally furnish sheet rubber of the proper nature for making patches that are to be vulcanized.

48. The most important thing in the preparation of an inner tube for vulcanizing is cleanliness. It is absolutely necessary that the inner tube that is to be repaired be thoroughly cleaned of all bloom or talc around the hole or puncture before the vulcanizing cement is applied if a good job is desired. Ordinary rubber cement is useless for making vulcanized repairs; regular vulcanizing cement must be used.

When a hole or slit in an inner tube is to be mended by vulcanization, a piece of prepared rubber, called *inner-tube stock*, should be placed inside of the tube, over the hole, and vulcanized. The tube should be prepared for the job by first roughening, as far as possible, the inner surface for a space of from 1 inch to 2 inches around the hole with a piece of emery cloth or sandpaper. It should then be washed thoroughly by inserting a piece of cloth or a small brush saturated with gasoline. A thin coat of vulcanizing cement can now be applied and allowed to dry for a couple of minutes, or until it is quite sticky, after which a second coat may be put on, when the tube will be ready for the patch of repair rubber.

A piece of the prepared rubber is cut about ½ inch larger than the hole and a piece of paper is stuck to the back or some talc is put on. The rubber is then inserted in the hole in the tube with the clean side next to the tube and carefully pressed down, so that the patch and the tube will be in intimate contact before vulcanizing. Sometimes a roller tool consisting of a comparatively small round-edged roller in the end of a handle is used for this purpose. The hole or slit can now be filled with a piece of the prepared rubber, and the job will be ready for the vulcanizer. A piece of waxed paper should be placed between the vulcanizer and the inner tube in order to prevent their sticking together.

49. An inner tube may be vulcanized in the garage by hanging it across a board about 6 inches wide that is supported at only one end and placing the vulcanizer directly on the injured place and clamping it on. On the road, the tube can be strapped lengthwise on an inflated tire and the vulcanizer applied. The exact length of time necessary for vulcanization depends on the job and on the kind of vulcanizer used; the instructions of the maker of the vulcanizing apparatus should be most carefully followed in regard to this.

50. When only a very small puncture in an inner tube is vulcanized, a small piece of prepared rubber is first inserted in the hole after the damaged part has been thoroughly cleaned and coated with vulcanizing cement.

Two layers of prepared rubber are then applied over the puncture, the first being about ⅛ inch larger than the hole and the second about ½ inch larger. The vulcanizer can now be applied after covering the repair with waxed paper.

51. Vulcanizing Tire Casings.—Small cuts in a tire casing, if they do not extend clear through the shoe, can usually be vulcanized without removing the tire from the wheel. The cut is prepared for vulcanizing by first washing it out thoroughly with gasoline and then roughening the rubber around the edge with a rasp or wire brush. The surface of the rubber should then be coated with vulcanizing cement and a piece of inner-tube stock forced into the cut after the cement has dried. After bringing the vulcanizer up to the required temperature, it can be clamped on the tire and the actual vulcanizing process begun. Before clamping on the apparatus, however, powdered talc should be sprinkled on the surface of the tire around the damaged spot to prevent the vulcanizer from sticking. The time required for vulcanizing a cut in a casing varies from 30 to 60 minutes, depending on the depth of the cut.

52. In the case of a ragged cut or a tear, the loose rubber should be cut away, leaving a clean hole in the tread. This should then be coated with vulcanizing cement and a single piece of inner-tube stock cut to size inserted, placing over this two or three layers of tread stock. The prepared rubber, known as *tread stock*, and which is suitable for treads, is not suitable for inner-tube repairs.

53. The size of blow-out that can be repaired successfully depends on the size of vulcanizer available. The first thing to do in the repair of a very small blow-out, as in any other tire repair, is to clean the inside of the tire thoroughly with gasoline and coarse sandpaper for about 3 inches on each side of the hole. At least two coats of cement should then be applied and let dry until the gasoline has all evaporated and a smooth surface is obtained on the canvas. A piece of prepared rubber at least 1 inch larger than the hole should be stuck to the inside of the casing, and over this three layers of blow-out canvas applied. The first layer of canvas should be 1 inch larger than the layer of rubber and each succeeding layer ½ inch larger all around than the one before it. After the patches are put in place, they should be covered with waxed paper and the inner tube inserted and inflated slightly. The cut on the outside of the tire can then be prepared like an ordinary cut or tear, and the vulcanizer applied. The time required for vulcanizing such a repair is usually from 40 minutes to 1 hour. Large blow-outs can only be repaired successfully at a regular properly equipped tire-repair station.

54. A sand blister is prepared for vulcanizing by cutting half way around the blister with a sharp knife, cutting through the rubber to the canvas on the side of the blister away from the tread of the tire. The flap thus formed should be turned back and pinned down and all dirt removed from under it. Then the cut should be cleaned and cemented with vulcanizing cement as for an ordinary casing cut. Next, a strip of inner-tube stock as wide as the tire rubber is thick should be stuck on the edge of the flap and a thin sheet of the same prepared rubber the exact size of the cavity laid on the canvas and pressed down. The flap can now be laid back in place and the repair vulcanized, the time allowed depending on the particular vulcanizer used. Care should be taken that the hole, through which the dirt entered, is stopped up.

55. A rim-cut tire shoe can often be repaired in such a manner by an expert tire repairman that it will give long service, provided the tire is otherwise good. Repair is made by vulcanizing strips of fabric over the bead and up from the bead on both the inside and the outside of the casing. However, on account of the increased thickness due to the repair, it is sometimes difficult to get the bead into the clinch.

56. When a tire shoe has been in use until the rubber tread has worn off enough for the fabric to show in places, the tire shoe, if the fabric is still in good condition, can often be repaired to advantage by retreading it.

Two methods of retreading a casing are in use; the preliminary work in both methods consists in removing all the old tread from the casing, cleaning the exposed fabric of all dirt and washing it with gasoline, and then applying vulcanizing cement to the fabric. When this cement has dried to the proper consistency, a so-called *tread band*, made in the right shape of rubber in a semivulcanized state, as regularly furnished for this purpose by tire manufacturers, is applied.

The casing, in one process, is then enclosed in a cast-iron mold of the required shape and entirely surrounding the tire, a circular spring or other type of metal core being placed inside the casing. The mold with the enclosed casing is then placed in a steam kettle and heated by steam until the rubber is vulcanized. A tread produced as just explained is called a *molded tread.*

In the other method, an air bag, which is simply a heavy inner tube made expressly for repair work of this kind, or a helical spring of the right size and length, is placed inside the casing, and the semivulcanized tread band is secured to the shoe by tightly wrapping long strips of muslin around the casing. The shoe is then placed in a steam kettle and vulcanized in direct contact with the steam; a tread thus produced is called a *hand-wrapped tread.*

Many tire repairmen prefer to build up new treads from sheet rubber instead of using a semivulcanized tread band.

57. Another method of retreading that is coming into extensive use also uses tread bands, but instead of being semivulcanized, these are fully vulcanized and are made with various anti-skid projections. The application of one of these anti-skid tread bands depends on the condition of the old tread. If this is merely worn down but not torn loose in any way from the carcass, it is thoroughly cleaned and roughened up, and then given several coats of a heavy vulcanizing cement, as is also done to the inside of the tread band, which is applied by stretching it over the tire. If the tread has torn loose from the carcass, all the old tread is removed; the carcass is then thoroughly cleaned and roughened up, treated to several coats of vulcanizing cement, and several layers of rubber called *cushion stock* are applied. The tread band, which also has been treated inside with vulcanizing cement, is then applied to the tire.

An air bag or a helical spring of the correct size and length is now placed inside the casing; the tread is secured by wrapping the casing tightly with muslin strips, and the whole tire is placed in a steam kettle and then vulcanized.

The application of tread bands to a casing by means of ordinary rubber cement is a waste of time and money, as they will come off almost as soon as the tire is put into service; a tread band must be vulcanized to the tire. The application of anti-skid tread bands should be only entrusted to a properly equipped tire-repair station, or to the manufacturer of the tire.

58. The repair of large cuts, blow-outs, and beads, as well as the retreading of tires, should be entrusted only to a properly equipped tire-repair shop or to tire manufacturers. As a general rule, however, manufacturers will repair only tires of their own make.

INDEX

NOTE.—In this volume, each Section is complete in itself and has a number. This number is printed at the top of every page of the Section in the headline opposite the page number, and to distinguish this Section number from the page number, the Section number is preceded by a section mark (§). In order to find a reference, glance along the inside edges of the headlines until the desired Section number is found, then along the page numbers of that Section until the desired page is found. Thus, to find the reference "Ammeter, §1, p8," turn to the Section marked §1, then to page 8 of that Section.