INTERNATIONAL INSTITUTE OF AGRICULTURE
BUREAU OF AGRICULTURAL INTELLIGENCE AND PLANT DISEASES



# INTERNATIONAL REVIEW OF THE SCIENCE AND PRACTICE OF AGRICULTURE

## MONTHLY BULLETIN OF AGRICULTURAL INTELLIGENCE AND PLANT DISEASES

YEAR VII. - NUMBER 7
JULY 1916

ROME
PRINTING OFFICE OF THE INSTITUTE
1916

# Publications of the International Institute of Agriculture.

## I. Publications for Sale.

| | Annual subscription | Single number |
|---|---|---|
| **A. — *MONTHLY OR WEEKLY PUBLICATIONS.*** | — | — |
| 1. INTERNATIONAL CROP REPORT AND AGRICULTURAL STATISTICS (*Bulletin of Agricultural and Commercial Statistics*), published monthly in English, French, German, Spanish and Italian, 16mo | Frs. 6 | 0,60 |
| 2. INTERNATIONAL REVIEW OF THE SCIENCE AND PRACTICE OF AGRICULTURE (*Monthly Bulletin of Agricultural Intelligence and Plant Diseases*), published monthly in English, French, German, Spanish and Italian. (Each number consists of about 180 pages, 16mo) | » 18 | 2 — |
| 3. INTERNATIONAL REVIEW OF AGRICULTURAL ECONOMICS (*Monthly Bulletin of Economic and Social Intelligence*), published monthly in English, French, German, Spanish and Italian. (Each number consists of about 150 pages, 16mo) | » 18 | 2 — |
| Subscription to all three Bulletins | » 36 | |
| **B. — *YEAR BOOKS.*** | | |
| 1. ANNUAIRE INTERNATIONAL DE STATISTIQUE AGRICOLE POUR 1910 (International Year Book of Agricultural Statistics, 1910). (1912, XLVIII + 327 pages, 16mo) | Frs. 5 — | |
| Do. Vol. II, Years 1911-1912. (1914, XXXIV + 624 pp. 16mo) | » 5 — | |
| Do. Vol. III, Years 1913-1914. (1915, XLIV + 788 pp. 16mo) | » 5 — | |
| 2. ANNUAIRE INTERNATIONAL DE LÉGISLATION AGRICOLE, 1st. Year, 1911, (International Year Book of Agricultural Legislation, 1911). (1912, 1,122 pages, 16mo) | » 10 — | |
| Do. 2nd Year, 1912. (1913, 994 pages, 16mo) | » 10 — | |
| Do. 3rd Year, 1913. (1914, 1,114 pages, 16mo) | » 10 — | |
| Do. 4th Year, 1914 (1915, LXVIII + 1,020 pages, 16mo) | » 10 — | |
| Do. 5th Year, 1915 (1916, LXXVXVI + 1,460 pages, 16mo) | » 10 — | |
| **C. — *OTHER PUBLICATIONS.*** | | |
| **(*a*) Publications of the Library.** | | |
| 1. CATALOGUE DE LA BIBLIOTHÈQUE. ANNÉE 1909 (Catalogue of the Library, 1909). (356 pages, 8vo) | Frs. 3 — | |
| 2. LISTE DES REVUES ET JOURNAUX RÉGULIÈREMENT REÇUS PAR L'INSTITUT, 1913 (List of Reviews and Papers regularly received by the Institute, 1913) (84 pages, 16mo) | » 0.50 | |
| **(*b*) Publications of the Bureau of Statistics.** | | |
| **(1) *Various publications.*** | | |
| 1. L'ORGANISATION DES SERVICES DE STATISTIQUE AGRICOLE DANS LES DIVERS PAYS, Vol. I (The Organization of the Agricultural Statistical Services in the Different Countries, Vol. I). (1910, 446 pages, with tables in addition to the text, 16mo) | » 4 — | |
| Do. Vol. II. (1913, 146 pages, 16mo) | 2 — | |
| 2. RECUEIL DE COEFFICIENTS POUR LA CONVERSION DES POIDS, MESURES ET MONNAIES AU SYSTÈME MÉTRIQUE DÉCIMAL (Collection of Coefficients for the Conversion of Weights, Measures, and Money Values into the Decimal Metric System). (1914, 84 pages, 32mo) | » 1 — | |
| **(2) *Monographs (New Series).*** | | |
| 1. L'ORGANISATION DE LA STATISTIQUE DU COMMERCE EXTÉRIEUR EN ITALIE (Organisation of the Statistics of Foreign Trade in Italy). (1913, 190 pages 16mo) | 2 — | |
| 2. LE MARCHÉ DES CÉRÉALES D'ANVERS (The Antwerp Corn Market) (1913 62 pages, 16mo) | » 1 — | |
| 3. LES BOURSES DES PRODUITS AGRICOLES DE HAMBOURG ET BUDAPEST (The Agricultural Produce Exchanges of Hamburg and Budapest). (1913, 55 pages, 16mo) | » 1 — | |
| 4. NOTES SUR LES STATISTIQUES DU COMMERCE EXTÉRIEUR DANS LES DIFFÉRENTS PAYS: Publications Statistiques, Territoires, Sortes de Commerce, Provenances et Destinations des Marchandises (Notes on the Statistics of Foreign Trade in the Different Countries: Statistical Publications, Territory, Kinds of Trade, Source and Destination of Goods). (1914, 96 pages, 16mo) | » 2 — | |
| 5. LA RÉPARTITION AGRICOLE DES TERRITOIRES DES DIFFÉRENTS PAYS (Areas under Crops in the Different Countries). (1914, 310 pages, 16mo) | » 5 — | |
| **(3) *Other publications.*** | | |
| UMBERTO RICCI: LES BASES THÉORIQUES DE LA STATISTIQUE AGRICOLE INTERNATIONALE (Theoretical Bases of International Agricultura Statistics), | | |

INTERNATIONAL INSTITUTE OF AGRICULTURE
BUREAU OF AGRICULTURAL INTELLIGENCE AND PLANT DISEASES



# INTERNATIONAL REVIEW OF THE SCIENCE AND PRACTICE OF AGRICULTURE

## MONTHLY BULLETIN OF AGRICULTURAL INTELLIGENCE AND PLANT DISEASES

YEAR VII. – NUMBER 7
JULY 1916

ROME
PRINTING OFFICE OF THE INSTITUTE
1916

# THE INTERNATIONAL INSTITUTE OF AGRICULTURE

The International Institute of Agriculture was established under the International Treaty of June 7th, 1905, which was ratified by 40 Governments. Fifteen other Governments have since adhered to the Institute.

It is a Government Institution in which each Country is represented by delegates. The Institute is composed of a General Assembly and a Permanent Committee.

The Institute, always confining its attention to the international aspect of the various questions concerned, shall:

(*a*) Collect, study, and publish as promptly as possible, statistical, technical, or economic information concerning farming, vegetable and animal products, trade in agricultural produce, and the prices prevailing in the various markets.

(*b*) Communicate the above information as soon as possible to those interested.

(*c*) Indicate the wages paid for farm work.

(*d*) Record new diseases of plants which may appear in any part of the world, showing the regions infected, the progress of the diseases, and, if possible, any effective remedies.

(*e*) Study questions concerning agricultural co-operation, insurance, and credit from every point of view; collect and publish information which might prove of value in the various countries for the organisation of agricultural co-operation, insurance and credit.

(*f*) Submit for the approval of the various Governments, if necessary, measures for the protection of the common interests of farmers and for the improvement of their condition, utilising for this purpose all available sources of information, such as resolutions passed by international or other agricultural congresses and societies, or by scientific and learned bodies, etc.

# Permanent Committee

## of the International Institute of Agriculture

*President:* Marquis Raffaele Cappelli, *Delegate of Italy.*

*Vice-President:* M. Louis-Dop, *Delegate of France.*

*List of the Delegates of the Permanent Committee:*

| | | | |
|---|---|---|---|
| 1 | Germany | I | Dr. T. Mueller, Privy Councillor. |
| 2 | Argentine Republic. | I | Dr. Octavio Piñeiro Sorondo. |
| 3 | Austria | I | Chev. V. de Pozzi, Government Councillor. |
| 4 | Hungary | I | E. de Miklós, Secr. of State, Member of House of Magnates. |
| 5 | Belgium | IV | O. Bolle. |
| 6 | Brazil | I | Antonino Fialho, Ex-Deputy. |
| 7 | Bulgaria | III | M. Stancioff. |
| 8 | Chile | II | S. Aldunate, Minister Plenipotentiary. |
| 9 | China | I | Wang-Tseng-Sze. |
| 10 | Columbia | V | J. M. Hurtado, Minister Plenipotentiary. |
| 11 | Costa-Rica | V | Marco Besso. |
| 12 | Cuba | V | M. A. Martin Rivero, Minister Plenipotentiary. |
| 13 | Denmark | IV | A. de Oldenburg, Chargé d'affaires. |
| 14 | Ottoman Empire | I | Dr. Mehmed Djémil Bey. |
| 15 | Egypt | II | B. Chimirri, Senator, Delegate of Eritrea. |
| 16 | Ecuador | V | Marco Besso. |
| 17 | Spain | I | Enrique Rodriguez de Celis, Agricultural Engineer. |
| 18 | United States | I | David Lubin. |
| 19 | Abyssinia | V | Prof. G. Cuboni, Director, Station of Plant Pathology, Rome. |
| 20 | France | I | Louis-Dop, Vice-president of the Institute. |
| 21 | Algeria | V | Louis-Dop. |
| 22 | Morocco | V | Louis-Dop. |
| 23 | Tunis | V | Louis-Dop. |
| 24 | Gt. Britain & Ireland | I | Sir James Wilson, K. C. S. I. |
| 25 | Australia | III | Sir James Wilson, K. C. S. I. |
| 26 | Canada | II | Sir James Wilson K. C. S. I. |
| 27 | British India | II | Sir James Wilson, K. C. S. I. |
| 28 | New Zealand | IV | Sir James Wilson, K. C. S. I. |
| 29 | Mauritius | V | Sir James Wilson, K. C. S. I. |
| 30 | Union of South Africa | IV | Sir James Wilson, K. C. S. I. |
| 31 | Greece | IV | M. Coromilas, Minister Plenipotentiary. |
| 32 | Guatemala | V | G. Montefiore, Consul General for Guatemala. |
| 33 | Italy | I | Marquis R. Cappelli, Deputy, President of the Institute. |
| 34 | Eritrea & It. Somal. | IV | B. Chimirri, Senator. |
| 35 | Tripoli and Cirenaica | IV | B. Chimirri. |
| 36 | Japan | I | Baron Otori, Attaché to the Embassy. |
| 37 | Luxemburg | V | O. Bolle, Delegate of Belginm. |
| 38 | Mexico | III | G. A. Esteva, Minister Plenipotentiary. |
| 39 | Montenegro | V | G. Volpi, Minister Plenipotentiary. |
| 40 | Nicaragua | V | V. E. Bianchi, Consul General. |
| 41 | Norway | IV | Dr. A. Fjelstad, Counsellor to the Agricultural Department. |
| 42 | Paraguay | V | Prof. Orazio Comes, Director Portici Agr. College. |
| 43 | Netherlands | IV | Baron W. B. R. de Welderen Rengers, Minister Plenip. |
| 44 | Dutch East Indies | IV | Baron W. B. R. de Welderen Rengers. |
| 45 | Peru | V | Louis-Dop, Delegate of France. |
| 46 | Persia | IV | A. del Gallo, Marquis of Roccagiovine. |
| 47 | Portugal | IV | Eusebio Leao, Minister Plenipotentiary. |
| 48 | Roumania | I | Demetrius C. Pennesco, Counsellor to the Legation. |
| 49 | Russia | I | His Excell. G. Zabiello, Consul General for Russia. |
| 50 | Salvador | V | A. Bianchi Cagliesi, Vice-Consul. |
| 51 | San Marino | V | His Excell. L. Luzzatti, Minister of State. |
| 52 | Servia | III | C. Scotti, Consul General for Servia. |
| 53 | Sweden | IV | Baron C. N. D. de Bildt, Minister Plenipotentiary. |
| 54 | Switzerland | IV | M. de Planta, Minister Plenipotentiary. |
| 55 | Uruguay | V | Dr. E. Rovira, Consul. |

*General Secretary:* Prof. Giovanni Lorenzoni.

*In quoting articles, please mention this BULLETIN.*

# CONTENTS

*b*) SPECIAL.



## III. — LIVE STOCK AND BREEDING.

*a*) GENERAL.



*b*) SPECIAL.

## IV. — FARM ENGINEERING.



## V. — RURAL ECONOMICS.



## VI. — AGRICULTURAL INDUSTRIES.



# PLANT DISEASES.

## II. — DISEASES NOT DUE TO PARASITES, OR OF UNKNOWN ORIGIN.

## III. — Diseases due to Bacteria Fungi and other Lower Plants.



## IV. — Weeds and Parasitic Flowering Plants.



## V. — Injurious Insects and other Lower Animals.





The Editor's notes are marked (*Ed.*).

FIRST PART.

# ORIGINAL ARTICLES

## The Present State of Agriculture in Sweden

by

Professor H. JUHLIN-DANNFELT

*Secretary to the Royal Academy of Agriculture in Sweden.*

Since the remotest times, Sweden has been practically entirely an agricultural country. Half a century ago agriculture was still almost the only industry of the country, and production was sufficient for the needs of the population.

Since then the importance of agriculture has undergone a continuous decline. The proportion of persons directly deriving their livelihood from it has not kept pace with the increase in the population, or with the growth in the cultivated area. In 1870, rough calculations showed the agricultural population to form 71.9 % of the total, with 476 persons per 1000 acres of cultivated land, but in 1910 the corresponding figures were 48.2 % and 292 persons. Notwithstanding this, up till 1890 the agricultural population showed an increase in absolute numbers; after that date it fell from 2 915 000 to 2 663 000.

During the same period agricultural production became more and more inadequate to supply home consumption. In the period 1871-1880 the value of exported agricultural produce was on the average equal to that of imports (imports 52 932 000 kroner ; exports 55 497 000 kr.) (1) ; between 1901 and 1910 the average for all imports was nearly double that of exports (110 409 000 against 55 474 000 kroner), and from that time till 1914 the discrepancy has continued to grow.

These facts, however, prove neither absolute stagnation nor decline of agriculture, its production having grown in greater proportion than the number of the population, namely 4 times as against 2.5 times in the course

(1) 1 Swedish *krone* = 1 s. 1 $^{1}/_{5}$ *d.*

of a century. The average value of a crop of the country has about doubled since 1880, with an increase of 50 per cent. since 1909. The consumption per head, however, has shown a still greater increase, rising in one century from 515.88 to 992.08 lbs of cereals and from 194 to 399 lbs of bread-stuffs (rye and wheat) per person.

The relative retrogression indicated by these facts is chiefly due to the rapid development of industry, which absorbed a constantly growing proportion of the rural population, leading to what is termed " the desertion of the countryside ". The value of industrial products rose from 1000 million kroner in 1909 to 1772 million in 1912, while the crop value in the same period only went up from 600 to 900 million kroner.

To remedy this state of things various measures have been adopted for the promotion of agriculture. One of these was the reorganisation of the *agricultural administration*. In 1882 the administration of State forests and domains was placed in the hands of a new institution, the *Direction of Domains*, and 7 years later the *Department of Agriculture* was established as a central office for agricultural matters, which had till that time been dealt with by the executive Committee of the Royal Academy of Agriculture. In 1900 agricultural affairs were transferred from the Home Office to the newly created Ministry of Agriculture. Since 1889 the Academy of Agriculture, in its capacity as a scientific society has confined its work to the study of scientific questions in connection with agricultural experiments.

In the provinces, the chief intermediaries between the Government and farmers in all matters involving the welfare and progress of agriculture are the *Societies of Rural Economy*. Their duty is to work in their respective districts for the development of agriculture and allied industries, by education, by example, and by distributing rewards. They organise competitions, compile figures to form a basis of agricultural statistics, etc. They possess considerable resources, amounting in 1913 to about 4 million kroner (investments 400 000, members' subscriptions 50 000, public subscriptions 2 434 000, special appropriations 775 000 kroner).

The growing concern of the public authorities for the development of agriculture is also evident from the considerable increase of State expenditure for this object of late years. Such expenditure amounted in 1901 to 6.1 million kroner or 3.3 per cent. of the total estimates ; in 1915 it attained 14.1 million kroner, or 5.2 per cent.

Agricultural wealth is continuously increasing, though more slowly than the total wealth of the nation. According to the official taxation assessment, the following were, in 1900 and 1914, the values of real estate in millions of kroner :

| | 1900 | 1914 |
|---|---|---|
| Agricultural estate . . . . . | 2 355 = 52 % | 3 702 = 38 % |
| Other estate . . . . . | 2 147 = 48 % | 6 021 = 62 % |
| Totals . . . . . | 4 502 = 100 | 9 783 = 100 |

A special calculation made in 1908 gave the following values (in millions of kroner) for real and personal agricultural property.

| | | |
|---|---|---|
| Real estate. . . . . | 3 670 = 26.6 % | of the national wealth |
| Livestock . . . . . | 660 = 4.8 % | " " " |
| Implements etc. . . . . | 322 = 2.4 % | " " " |
| Total . . . | 4 661 = 33.8 % | of the national wealth |

Needless to say, in a country as extensive and varied in character as Sweden, the ratio between the values of the different descriptions of property changes very much. Neglecting extreme cases, these values on normal farms may be estimated as follows per acre of land cultivated :

| | | |
|---|---|---|
| Land capital . . . . . | 160 — 800 | kroner |
| Livestock . . . . . | 80 — 240 | " |
| Implements, machinery, etc. . . . . | 40 — 200 | " |
| Working capital . . . . . | 80 — 160 | " |
| Total . . . | 360 — 1 400 | kroner |

*Agricultural Credit.* — The real estate is generally encumbered with a considerable mortgage debt. For all the real estate together it amounted in 1912 to 51.7 per cent of the taxable value, but the share of agricultural property in this figure is not known.

Agricultural land credit is provided by 10 *District Mortgage Associations,* organised on the pattern of the German " Landschaften ". The loans are granted by the *General Mortgage Bank* of which the said associations are the sole members. This bank operates under the control of the State, which provided it with a guarantee fund of 30 million kroner in State stock. The outstanding loans by the provincial associations amounted in 1913 to 291 million kroner, or 7.7 per cent of the value of the mortgaged property. These societies are resorted to chiefly by large real estate owners ; small owners generally apply for the necessary advances to ordinary banks, public loan funds and private persons.

The provision of financial facilities for working capital has just been organised by a law of 1915 through the agency of *Local Agricultural Co-operative Societies* and Central Societies, but none of these institutions has yet begun to operate.

*Association and co-operation,* which at present play so important a part in the advancement of agriculture in most countries, did not gain a footing in Sweden until a late date. Latterly, however, they have made great headway concurrently with the growth of interest in the small farmer. The first co-operative dairies sprang up between 1860 and 1870, and, after various changes in organisation, multiplied until they numbered about 600, or 40 per cent of all the dairies of the country.

Later on, about 1885, farmers began to form associations for the joint purchase of fertilisers, concentrates and other primary necessities, and, in 1905, this co-operative movement resulted in the creation of the *National*

*Union of Provincial Societies and Local Associations.* The latter, now exceeding 1,000 in number, receive orders, effect the distribution of the goods purchased and collect payment. The provincial societies, at present numbering 22, receive orders and conclude transactions either direct with manufacturers and traders, or, in most cases, through the agency of the National Union, whose turnover in 1915 amounted to 24.5 million kroner,

The fundamental principle of this co-operation is the supply of goods at the market price of the day and the distribution of the profits among the participants rateably to the purchases of each. Associations or unions were afterwards formed to provide for almost all the needs of farmers in almost all branches of their work. These associations placed all the technical facilities of modern agriculture at the disposal of all growers, particularly small farmers, and assisted them to market their products to advantage, at the same time instructing them, by competent advice in all matters concerning agriculture and stock rearing. It is this latter point which lends importance to these associations in quite as great a degree as the economic advantages which they directly provide for their members.

The principle gaining ground more and more in these associations is that each member has one vote only, while participation in the profits and expenditure is in proportion to the shares held by each member or the area of his cultivated land, the number of his cows or the amount of his purchases or deliveries.

The present status of agricultural associations is shown by Table I containing statistics in reference to the different classes of economic societies in connection with Swedish agriculture.

TABLE I. — *Swedish Farmers' Economic Societies.*

| | |
|---|---|
| Mortgage Credit Societies | 10 |
| Purchasers' Societies: | |
| National Union | 1 |
| Provincial Societies | 22 |
| Local Associations | 1 100 |
| Societies for the production of peat litter | 30 |
| Stock rearing Societies: | |
| Stud Societies (Horses) | 160 |
| " " (Bulls) | 1 600 |
| " " (Pigs) | 600 |
| Inspection Societies (for cowsheds, piggeries, etc.) | 750 |
| Poultry-keeping Societies and Egg Sales Unions | — |
| Cooperative Dairy Societies | 700 |
| Societies for exportation of Butter | 2 |
| Co-operative Butchers | — |
| Societies for the Sale of Seeds | — |
| Societies for the Sale of Market-garden produce | 4 |
| Societies of Fruit-growers | 420 |
| Fisheries Societies | — |

*Labour* (1). — The relative decline of the agricultural population has exerted a perceptible influence not as regards the number of farmers (landowners and tenant farmers), but only as regards the number of labourers. It imposed greater economy of labour, but gave rise to no real difficulty in finding the necessary labourers for agricultural work and care of livestock, except in 2 cases :

1) For the extensive sugar beet cultivatons in the south of the country, emigrant labour had to be engaged, coming chiefly from Galicia and Poland, to the number of 1 000 to 1 300 persons of both sexes.

2) There is a permanent difficulty in finding farm hands, male and female, to look after the livestock and milk the cows.

The shortage of labour has also led to a considerable rise in wages, which have increased threefold since 1870, the present yearly wage for a man being 320 kroner, and for a woman 180 kroner ; the day wage in summer (without board or lodging) is 2.5 kroner for a man and 1.5 kroner for a woman ; these figures are the averages for the entire country.

Wages are generally the largest item of farm expenditure, and therefore their rise, which far exceeds that of the selling price of agricultural produce, has been a powerful factor in weakening the economic position of agriculture.

Hired labour formerly consisted chiefly of farm hands, male and female, hired by the year against fixed salary and board and lodging in the farmer's house ; on rather larger farms, again, a considerable part of the work was carried out by peasants who were under certain obligations of labour or payment, and by persons (" Torpare ", " Köthner ") to whom small holdings were granted in consideration of a number of days' labour per week, with the right also of doing paid labour. Great changes have taken place in this respect. Farm hands of both sexes are generally quick and strong labourers, but owing to the trouble of finding them board and the difficulty of moral supervision over them, the attempt has been made to replace them by married labourers (" Statare ") receiving wages and lodging ; the latter, however, instead of being fed in the employer's kitchen, receive a given quantity of the most important commodities, for instance, about 24 cwt. of rye; 22 bushels of potatoes; 6 or 8 cwt. of wheat for feeding livestock (pigs) per year; 5 ⅓ pints of full-cream milk per day, the same quantity of skim milk; wood fuel, and a piece of land for planting potatoes.

The forced labour tribute due from certain peasants either in the form of days of work or particular kinds of work, has long since been replaced by payment of a tenancy rent in money ; among the " Torpare " who occupy the above small holdings, the tendency to pay their dues by working them off has become more and more general. This form of contract is extremely favourable, both to the landowners who obtain labourers at the cost of the rent of patches of land of little value transferred to the latter, and to the tenants who thus have their own home, while their livelihood is secure, as they are always certain to find work on the owner's farm.

(1) See *International Review of Agricultural Economics*, February, March and April [illegible]

Notwithstanding these mutual advantages, however, the number of such tenants shows a tendency to decline, and the difficulty of finding new ones becomes greater and greater. Consequently, agricultural labour continues to be supplied by farm hands, male and female, engaged by the year or for six months, but in the case of large agricultural estates, chiefly by " Statare ", or married labourers, who receive wages in money and in kind and are also bound to allow their wives to assist, for an agreed payment, in milking the cows and in harvest work. In all cases, however, the endeavour is to reduce the number of labourers on fixed contract as much as possible, replacing them by day or job labourers.

THE CULTIVATED LAND AND ITS UTILISATION. The total area of land in Sweden is about 101,400,000 acres divided as follows :

TABLE II. — *Division of Land in Sweden.*

| | Area in acres | % of total area |
|---|---|---|
| Gardens | 113 671 | 0.1 |
| Arable land | 9 085 867 | 9.0 |
| Natural grass-land | 3 148 054 | 3.1 |
| Forest | 54 942 685 | 54.2 |
| Unproductive Land | 34 107 213 | 33.6 |

Nevertheless, owing to the great size of the country (extending between latitudes 55°2' and 69°4') and its geographical and geological configuration, there is a great difference in the relative proportions of the different kinds of land both between north and south and between the mountain and forest stretches of country with moraine soil in the interior and the clayey or sometimes sandy plains bordering the coasts between the Baltic and the Kattegat. The extremes are represented by the province of Scânia, where cultivated land forms as much as 60 per cent. of the total area, and that of Norrbotten, in which less than 0.4 per cent. of the land is cultivated. The area of cultivated land is continually on the increase, chiefly through the reclamation of marshes, but the proportion of increase shows a constant decline. 25 years ago the increase was usually 74 133 acres per annum, but during the last ten years it has only been 24 711 acres per year. This is a consequence of the increased cost of labour. The bulk of the reclamation work is carried out with the assistance of the Government, which in 1915 for instance appropriated 1 400 000 kroner for loans with that object, and 2 350 000 kroner for grants not subject to repayment.

Clearing work is principally carried out on the peat soils, which have gone up greatly in value for cultivation purposes since rational fertilisation was rendered possible by the use of artificial manures. The results obtained in this direction were due to a large extent to the investigations of the *Swedish Marsh Reclamation Society.*

Small farms show a continuous increase at the expense of the large ones, the number of which is constantly decreasing. The former total about 360 000, besides which there are about 140 000 small holdings, mostly al-

lotted to labourers against payment in the form of labour for the landlord. It is calculated that on about 70 per cent. of the independent farms, and on all the holdings, the area of cultivated land does not exceed 25 acres, which means that they can be worked without hired labour. Farms averaging 25 to 124 acres of cultivated land represent 28 per cent and large estates with more than 124 acres of cultivated land a little more than 2 per cent. of the total number.

The area of cultivated land is divided as follows among the different classes: one half belongs to farms of medium size; about one fourth to small farms; and the same to large estates.

This distribution, however, varies greatly in different parts of the country, the large estates, particularly manorial estates, lying chiefly in the fertile plains, while the small ones are in the uplands where the cultivated land is scattered among the mountains, rocky hills, marshes and streams. In the northern forest districts in particular there are hardly any but small tenant farmers, the land belonging mostly to big forest estates. Increased facilities of transit and industrial development have also to some extent affected the distribution of agricultural property, small farms being numerous in the neighbourhood of large towns, industrial centres and railway junctions.

In Sweden the land is for the most part tilled by the owners themselves, in the proportion of about 85 per cent.; the larger the acreage of farms the greater the proportion worked by tenant farmers. The position of the latter towards the landlord has been greatly improved by the new laws of 1907 and 1909 on tenant farmers. In the northern provinces especially, where a large proportion of the land belongs to commercial companies, the rights of the landlord have been restricted in favour of the tenant farmer.

*Measures for the Benefit of Small Farms.* The great increase in the number of small farms is partly due to the attempts made to stem townward migration. In order to facilitate land settlement by small farmers, the State has for some time been selling the land in small plots. All Crown domains not yielding a minimum which was fixed in 1874 at 200 and in 1892 at 600 kroner, are put up for sale when the farm leases expire. Under the decrees of 1894 and 1899, moreover, those parts of Crown domains which are suitable for forming separate farms must be split up and put up for sale or let. Between 1894 and 1912, about 1800 small farms were sold in the central and southern part of the country. In the northern provinces, portion of forest domains suitable for cultivation are allotted rent free for the first 15 years, and for a moderate fixed rent during a further 50 years. The primary object of these grants was to provide the public authorities with the necessary labour for forest maintenance, but no obligation in this respect is imposed on the settlers. The number of holdings of this kind is about 1 200.

Division into small holdings is greatly facilitated by the simplicity of legal formalities, chiefly owing to a law of 1896 which enables cultivated land to be separated from forest, the latter being more difficult to work in small plots. This law however does not apply to the northern provinces, where agriculture could hardly be self-supporting without the contribution

of the forests to the financial return. The Government has encouraged the increase of small farms by a system of financial facilities. Loans are granted up to the amount of 5/6ths of the value of the land and buildings, at 3 per cent interest with repayment over a long period. Between 1905 and 1913, about 8 900 loans were granted representing a total slightly above 25 million kroner.

For a quarter of a century the small farmer has also been provided for in other respects by the public authorities, having been the chief one to profit by the subsidies granted for the reclamation of waste land and the development of stock rearing, and also by the assistance furnished by scientific agriculturists in the service of the State or rural economy Societies.

The Government furthermore allocates every year a certain sum (now 400 000 kroner) for the encouragement of the small farmer in the following ways :

(1) Premiums for the clearing of small areas of brushland etc.

(2) Competitions between small farms with premiums and conditional loans (totalling about 50 000 kroner per year) for works of improvement ; if the work has been carried out satisfactorily within the time fixed, the repayment of the loan is postponed.

(3) Subsidies to Inspection Societies and Societies for the proper keeping of books of account on farms.

(4) Educational courses (in 1913, 264 courses at a total expenditure of 71 000 kroner) and excursions for agriculturists, male and female (in 1913, 810 persons took part), with subsidies totalling 61 000 kroner.

*Crops.* — The types of crop grown differ greatly according to climatic and soil conditions, and general farming standard. The simplest methods of cultivation are practised in the north. Grain growing is very limited there owing to the short summer ; it only extends over 10 to 30 per cent. of cultivated land, and mostly comprises spring cereals; chiefly 4-rowed barley which is the earliest, while winter wheats, which occupy the land for 2 summers, are less suitable. Fallowing is only applied before the winter wheat. Towards the south, oats gain the upper hand. Artificial grass-lands cover a wide area (averaging 60 per cent. of the cultivated area) in the northern provinces, and are left uncleared for a longer or shorter period of time (up to 20 years) in the more northerly parts.

In the central and southern portions of the country there is greater equality of distribution of the different cultivations. In proportion as the general farming level improves, fallowing and laying down to grass decreases, while on the other hand grain crops and pulse crops for green or dry forage increase ; above all there is a large increase in root crops or forage.

In those parts of the country where farming practice is on a lower plane the most usual rotations are as follows : 1) fallow ; 2) winter cereal (rye and wheat) ; 3-5) artificial grass-lands; 6-7) spring cereals (oats and barley), pulses (peas and vetches) and mixed crops. An almost equal proportion (about 40 %) of the land in this part of the country is under grain and

leys, 10 to 15 per cent. of the land being fallow, 3 to 4 per cent planted with potatoes and 0.5 to 1.5 per cent with forage root crops.

In the districts where farming practice reaches the highest level, fallowing often disappears, the soil being tilled by harrowing and ploughing in, especially after the hay and green forage crop ; the land is only sown to grass for one or two years, and to the extent of 15 to 20 per cent of the acreage cultivated. The greater part of the land is under grains and pulses, cropped when ripe or as green forage. Finally, particular attention is given to root crops, which may occupy up to 25 per cent of the arable land. As examples of the rotations practised in these districts there may be mentioned: 1) green forage (peas, vetches, oats and barley) ; 2) winter cereals (particularly wheat); 3) root crops (sugar beet and forage roots) ; 4) spring cereal ; 5) grass ; 6) spring cereal — or else 1) root crops ; 2) spring cereal ; 3) grass or green forage ; 4) winter cereal.

The distribution of the different types of cultivation varies greatly according to the quantity of soil and the climate. Winter cereals are chiefly cultivated in the plains, where they take up 15 to 20 per cent of the cultivated land, wheat only in clayey soils, and rye in sandy soils also, where, together with potatoes, it forms the most important crop. In marshy soils winter cereals do not stand the climate well. Wheat, which is more exacting than rye as regards the nature of the soil, on the other hand furnishes a greater yield under favourable conditions and its cultivation has been considerably extended of late years.

Barley and oats are only grown as spring cereals, barley, (4-rowed) chiefly in high lands with light stony soil ; oats everywhere, except in the north of the country, cover the greater part (up to 30-40 %) of the cultivated land, being chiefly planted on lean and also marshy soils. 2-rowed barley is only grown in the plains, chiefly on the best soils with a sufficient proportion of lime.

Peas and vetches are almost everywhere grown mixed with oats and barley, rarely alone ; this crop is chiefly raised on soils rich in lime. Beans are entirely limited to the lands skirting the west coast.

Potatoes are cultivated on all the farms of the country, generally in proportion to local need, so that almost everywhere the same proportion of the land is allotted to this crop (3 to 5 %). In the southern provinces alone, where the soil is sandy, the area planted with potatoes is considerably larger, the excess of the crop over local consumption being used chiefly for the manufacture of alcohol and starch. Root crops are mostly grown in the south of the country, where the sugar beet, under intensive cultivation, is of great importance from the point of view of rural economy. In Scania this crop occupies 10 per cent of the cultivated land, while in the other provinces it rarely exceeds 1.5 to 2 per cent. It receives special attention owing to its importance in crop rotation and for stock rearing.

Natural grass-lands were at one time very extensive, but have now largely been brought under cultivation, the remainder now occupying only one-third of the productive surface. Most of these grass-lands receive no cultivation or manuring whatever and their yield is consequently

rather low, probably not averaging more than 12 cwt. of hay per acre.. Of late years, following German example, the grass-lands have begun to be used for grazing on rational lines, producing a considerable increase in their yield.

*Seeds.* — Grain and leguminous (pea, bean and vetch) seeds as well as seed potatoes are obtained from home crops exclusively. Until lately on the other hand, seeds of forage plants (including root crops) were mainly imported. This is of course a weak point, but it does not mean that with the majority of these plants there is any difficulty in growing good quality seeds within the country. On the contrary, Swedish seeds are held in high esteem because of the certainty of their being suited to the country, and of the guarantees obtainable as to purity.

With regard to pasture grasses, the majority of the most common species, timothy, red clover and hybrid clover are cultivated. Red clover is distinguished into the early and late varieties, the former being used for sowing leys of 1 or 2 years duration, particularly in southern Sweden, and the latter for longer periods. Both late and hybrid clover seeds are grown chiefly in the country, while those of early red clover are almost entirely imported. They are termed " Silesian clover seeds ", but they are also imported from Bohemia, Moravia, and especially Russia. French, Italian and American red clovers are wanting in powers of endurance, and are therefore not rated very high. To facilitate verifying the origin of seeds, a law of 1909 provides that red clover, hybrid clover and timothy seeds must when imported be dyed red with eosin. Seeds of pasture grasses (except timothy seeds) and for root crops are still mostly imported, but during the last few years the most common forage plants in addition to timothy such as cocksfoot, rye grass and brome grass, as well as radishes, turnips, carrots and sugar and forage beets have begun to be grown for seeds to an ever increasing extent and with perfect success.

*Seed testing.* — There are 17 establishments receiving Government grants and operating according to official regulations which are substantially the same in Scandinavian countries. This testing has been carried on for 40 years (since 1877), and as a result the quality of the seeds put on the market is generally fairly satisfactory, and adulteration is rare.

*Yields.* — The averages in Sweden (wheat, 16.72 cwt per acre, rye 12.74 barley 12.74, oats 11.94, potatoes 79.65, sugar beet 238.96, forage roots 278.78) are almost the same as the average figures for Europe. They are below those of other Germanic countries, but higher than of Slavonic and Latin countries, except Belgium. These averages, however, like the level of agriculture, vary greatly in the different parts of the country. In the best regions they approximate to the crop value of the countries leading in this respect. The constant increase of yield recorded during the last decade justifies the hope that progress will continue.

This progress in yield is largely due to the fact that the old seeds have been replaced by better grades coming mainly from the Svalöf Institute, which enjoys the highest repute even outside the country for

its work of improvement of crops (1). The varieties of oats and barley which are most grown in the country give on the average a crop 15 to 29 per cent. bigger than that of the old variety, and the latest improved wheat, though only grown to a small extent so far, shows a still higher superiority over the old varieties. Of course progress in this respect is chiefly observable in the southern and most fertile portions of Sweden, while the difficulty of increasing the yield by seed improvement increases in proportion as the summer becomes shorter, the soil poorer and the climate drier.

*Agricultural Improvements.* — The increase of yield is partly the result of land improvements and progress in cultivation work. *Drainage* is of the utmost importance in a country where the land is so hilly and broken and the soil is as retentive of moisture as clay and peat soils. This matter however, is still largely neglected, a large portion of the land being drained by open ditches only, and drainage by covered conduits and pipes making but slow progress owing to the high cost of labour. To encourage covered drainage on small farms, the Government grants loans at low interest.

Progress is more marked as regards *ploughing*, which is now done deeper, generally to at least 7 $^3/_4$ inches but often to 10 inches. Attention is also given to methodical utilisation of the soil moisture, which is of the utmost importance in a country where the rainfall during the 6 summer months usually does not exceed 13.3 inches and during each month of the spring and early summer (May and June) is only 0.78 to 1.57 inches.

In ploughing during spring and summer the principles of dry farming are generally applied, that is to say, the soil is usually consolidated so that the capillary moisture can rise from the deeper strata, and the surface layer is loosened to prevent loss of moisture by evaporation.

The striking development of the industry of *agricultural machinery* in Sweden has been a factor in more effective and scientific tillage. This industry supplies the country with machines and implements which meet farming requirements, and it has now made such strides that whereas in former years a considerable quantity of such machinery was imported, it is now exported to a value of 12 to 15 million kroner.

*Manures and Manuring. — Liming.* The regions where the land is made up of limestone rocks, belonging chiefly to the Silurian formation, far exceed in fertility those poor in lime and belonging mainly of archaic origin. The manures used in these regions are, to a large extent, either finely ground limestone or lime, and also, but only to a small extent nowadays, marl. In order to promote the use of these effective means of increasing fertility, the Government makes a grant towards the cost of carriage of lime for manuring purposes.

*Farmyard Manures.* — As, comparatively speaking, there is plenty of livestock, there is no shortage of *stable manure*, which has latterly been put to more effective use. Instead of manuring only once per rotation, as was done formerly, the manure is now spread over several breaks, so as to

(1) See June 1913 ; pp. 851-860, The Swedish Svalöf Institute, by N. Hjalmar Nilsson. pp. 861-870 ; Wheat and Oat selection at Svalöf, by H. Nilsson-Ehle.

render its effect more uniform and complete. Greater care is also taken to preserve the fertilising elements, especially the nitrogen, in the manure, The stable manure is usually mixed with peat litter and compost. It has become more and more usual to provide the dung pit with a concrete bottom, and , on small farms, to keep the dung heap in a special shed.

The use of *chemical fertilisers* is still very limited. On marshy soils very poor in phosphorus and potash, potassium phosphates and salts are still used, and on soils poor in humus, for grain and root crops, phosphates and Chili nitrate or cyanamide are also in general use, but the quantities are too small to produce a maximum yield. The chemical manures are chiefly imported from abroad. Superphosphate and cyanamide, however, are manufactured within the country in quantities exceeding home consumption, the crude phosphates for the former being in turn imported. Two steel works also produce phosphated slag, but the supply from this source does not suffice for even half the consumption. Attempts have been made at different times to obtain potassic manures from the abundant strata of rocks with high potash contents in the country, but without success hitherto. The quality of chemical fertilisers is tested at 9 chemical Stations which receive State grants.

SECOND PART.

# ABSTRACTS

## AGRICULTURAL INTELLIGENCE

### GENERAL INFORMATION.

721 – **Creation of a School of Silkworm Rearing in the Republic of Colombia.** — *Revista agrícola, Órgano del Ministerio de Agricultura y Comercio*. Year 1, No. 11, pp. 642-644. Bogotá, November 1915.

AGRICULTURAL EDUCATION

By law No. 13 of 1915 the Government of Colombia provided for the encouragement of the silk industry which may prove a source of wealth to the country. In pursuance of this law, some trials of mulberry growing and silkworm nurseries having proved successful at Bucaramanga, there was created in that town, by decree No. 1989 of 1915, a School of silkworm rearing to which an annual appropriation of 1860 pesos (£ 387.10 s. at par) has been made, to which there will be added the proceeds of the silk produced, woven and sold by the School.

722 – **The Organization of the Cuban Agricultural Experiment Station** (Progress of Agricultural Science in Cuba). — CRAWLEY J. T. (Director of the Cuban Agricultural Experiment Station). *Modern Cuba*, Vol. 5 (8), No. 2, pp. 28-46, Havana, Feb. 1916.

DEVELOPMENT OF AGRICULTURE IN DIFFERENT COUNTRIES

The Cuban Agricultural Experiment Station was established at Santiago de las Vegas in 1904 by the first President of the Republic of Cuba.

The Station is divided into Departments, each with its chief, assistants, and necessary laboratory and other facilities, as follows.

1) *Agriculture.* — To this Department is given the experimental work with the more important crops, such as sugar cane, tobacco, corn and the various crops used for cattle feed, and green manuring.

2) *Horticulture.* — This has charge of the growing of fruits and vegetables, and the care of the grounds.

3) *Botany.* — This Department has gathered and cares for an herbarium of Cuban plants, and has charge of the study of forest trees, their distribution and utilization, vegetable fibres, medicinal plants, etc.

4) *Chemistry.* — Analysis of soils, fertilizer and agricultural products; not only those originating in the Station but those sent from without. This Department also has certain well-defined fertility problems for investigation.

5) *Pathology and Entomology.* — This is one of the most important Departments, since it has to deal with the difficult problems of the study of insect and plant diseases and proper methods for eradicating them. The problem has been more difficult owing to the fact that the tropics offer ideal conditions for the development of plant enemies, both insect and fungoid, and since so little work of this kind has been done in the tropics.

6) *Animal diseases.* — The laboratory carrying on investigations in animal diseases, and engaged in preparing vaccines and serums, was established under the direct supervision of the office of the Secretary of Agriculture and was transferred to the Station in March 1914. While it has the study of animal diseases in general, its principal work at the present time is the preparation of vaccines used in combating anthrax, black-leg, and hog cholera.

7) *Veterinary Medicine and Animal Husbandry.* — This Department is charged with the introduction and breeding of the best breeds of domestic animals, the study of butter and cheese making, the feeding values of various Cuban-grown feeds, and also the study of animal diseases.

While each Department has its own apparatus and problems, yet there is no fine line of demarcation between them and the closest cooperation among all officers is fostered.

## CROPS AND CULTIVATION.

AGRICULTURAL METEOROLOGY

723 - **Temperature Changes due to Terrestrial Radiation and Relation of the Latter to Plant Growth.** — ROSTER GIORGIO, in *Atti della Reale Accademia dei Georgofili di Firenze*, 163rd Year, Part I, pp. 1-27. Florence, January 1916.

The altitude chosen for meteorological observatories, their inevitable northerly exposure, and the arrangements for protecting the instruments from local influences, create an artificial environment differing too much from that of plant life Consequently the information gained hardly admits of application to such life. The proper course would be for all determinations made for purposes of agriculture (such as mean temperature of seasons, months and days, mean and absolute extremes, heat variations at short intervals causing variability of climate) to be conducted under heat, light, wind and moisture conditions as near as possible to those of plant life.

Maximum and minimum thermometers are best placed in the open air. If there is only one instrument it should be put at a height of 3 ft. 3 ins.; a second, if available, at a height of 6 ft. 6 ins. A third might very usefully be put under high timber trees at a height of 4 ft. 11 ins., in order to ascertain what amount of protection from terrestrial radiation these trees afford to plants under cover of them. In his garden of Otonella, island of Elba, Italy, the writer found that a thermometer placed under the dense

foliage of a carob tree shows minimum temperatures 3 to 4 degrees Centigrade above those of a thermometer in the open air.

In the same garden, from March to September 1913, observations were taken of the daily variations of temperature by means of a registering thermometer 20 ins. from the ground, receiving all the heat of the direct solar rays and those reflected by the soil, exactly as in the case of plants. These observations show daily ranges sometimes approximating 40° C. (104° F). This confirms the great capacity possessed by plants for adapting themselves to wide variations of temperature.

In another series of observations made in 1911, 1912, 1914 and 1915, the amount of terrestrial radiation in the belt of air in closest contact with the soil was determined. A thermograph was placed in the open air 20 in. from the ground, and another a short distance away 55 in. from the ground, facing north, and protected from the sun and terrestrial radiation. Thus the differences in the fall of temperature, due in particular to morning radiation, were ascertained. The results are set out in a series of tables, and the following conclusions are based on them.

(1) Using two registering thermometers, A and B, at the above respective distances from the ground, the minimum daily temperature is registered by that nearest to the ground. This fact comes out very clearly, the difference often being most marked and not subject to any exceptions.

(2) The annual mean of 470 observations calculated from the monthly average minima was 19.2 degrees by thermograph A (4 ½ ft. from the ground) and 16.6 degrees by thermograph B (1 ft. 7 ½ in. from the ground).

(3) The annual average of the absolute monthly minimum was 15.7° by thermograph A and 13° by B.

(4) The absolute minimum for the 4 years was 11.6° by A and 6.4° by B.

(5) The differences between the minimums of the two thermographs in the 470 observations, taking their average and their maximum value, are summed up as follows :

(*a*) The monthly mean difference A — B was 2.3° C.

(*b*) The mean of the maximum monthly differences was 3.8° ;

(*c*) The absolute maximum difference throughout the period in question reached the high figure of 5.4°.

These results prove beyond question the importance of the study, in connection with vegetation, of the temperature changes due to terrestrial radiation, which are perfectly distinct from the general cooling of the atmosphere and occur in the lower air strata, the medium of plant life.

724 – **Soluble Non-Protein Nitrogen of Soil.** — POTTER R. S. and SNYDER R. S. (Iowa State College Experiment Station), in *Journal of Agricultural Research*, Vol. VI, No. 2, pp. 61-64. Washington, D. C., April 10, 1916. SOIL PHYSICS, CHEMISTRY AND MICROBIOLOGY

The writers conclude from their researches into the nitrogenous substances of the soil that information may be obtained relative to the degree of decomposition of the organic matter in the soil by determining the proportion of nitrogenous compounds left in the alkali extract of the soil after precipitation of the protein by a suitable reagent. With this problem in

mind, they determined the nitrogen in alkali extracts of soil with or without the addition of proteins and other organic nitrogenous compounds. The proteins were precipitated by trichloracetic acid.

The principal consequence of the results obtained appears to be that the alkali extract does not contain a definite group of nitrogenous compounds. In any case, however, the non-protein fraction remaining in solution after precipitation by trichloracetic acid may contain most of the simpler nitrogenous compounds, and therefore its determination would give an index of the degree of decomposition of organic matter in the soil.

A bibliography of 8 works completes the article.

725 – **Influence of Resin and Tannin on the Balance of Nitrogen in the Soil.** — KOCH ALFRED and OELSNER ALICE, in *Centralblatt für Bakteriologie, Parasitenkunde und Infektionskrankheiten*, Vol. 45, No. 1-5, pp. 107-118. Jena, February 26, 1916.

In previous experimentation with forest soils (deciduous and coniferous respectively) one of the writers found that in soils containing nitric nitrogen the proportion of the latter was reduced after adding tannin or resin. These two substances greatly reduced nitrification, but without stopping it completely.

Tannin and resin being important products of vegetable metabolism, it was proposed to study their influence on the soil on the basis of previous experiments. The fact that a soil fertilised with sulphate of ammonia contains only a small amount of nitric nitrogen when the above two substances are present may be explained in two ways: *a*) the two substances may unfavourably affect the nitrifying power of the bacteria; *b*) nitrification is not impeded, but the nitrates formed are afterwards decomposed. The former hypothesis seemed the more probable, tannin and resin being used as antiseptics in leather tanning.

*Influence of Resin.* In GILTAY'S solution citric acid was replaced by resin, after which bacteria obtained either from horse dung or from the soil were put in. A few days later a reduction of nitrates by the bacteria was found to have taken place. In the same solution without bacteria no reduction of the nitrates was observed, from which it is concluded that resin exerts no chemical action on the nitrates.

In further experiments 5 gr. of resin and 0.025 gr. of sodium nitrate were added to 100 gr. of dry earth. After 4 weeks there was no further trace of nitrate in the soil. The total nitrogen content being unaltered, it is concluded that the bacteria had not decomposed the nitrate into free nitrogen, but had used it to build up their cells. This very interesting fact proves that resin, which is so difficult of solution in water, supplies energy to the denitrifying bacteria enabling them to reduce the nitrates in the soil.

The experiments were repeated both with GILTAY and RAULIN solutions, and it was found that the latter, owing to the potassium carbonate it contained, promoted the conversion of nitrates a little more than the former. The behaviour of resin in the presence of alkalies also showed that when alkalies or salts are present in the soil, the resin is decomposed into substances which can be utilised by the bacteria. Resin is therefore clearly a source

of energy to the denitrifying bacteria of the soil, and for this reason coniferous forest soils contain less nitrates than others.

*Influence of Tannin.* For 2 months the nitrification of soil samples to which 5 % and 10 % respectively of tannin + 2 grms of ammonium sulphate had been added was studied. It was found that the soil treated with 10 % of tannin contained less nitrates than that treated with 5 % of tannin, just as in the observations relating to resin. The same experiments also showed that the organisms which converted the nitrates of the soil utilised tannin as a source of energy. It becomes clearly evident that a soil rich in tannin must be poor in nitrates. The studies undertaken in order to ascertain the soil organisms which utilise both tannin and nitrates disclosed the presence of a fungus, *Aspergillus niger*, sometimes accompanied by other fungi. Contrary to the general belief, this *Aspergillus* abounds in the soil, but only works under given conditions, namely when the soil is rich in tannin. It decomposes the latter and reduces the nitrates to nitrites. Sugar is the component of tannin which it uses, but there are probably others also. The presence of calcium carbonate increase its decomposing power. Like bacteria, *Aspergillus niger* uses nitrates as a source of nitrogen, and also salts of ammonia when the soil contains tannin. The latter therefore is injurious.

As *Aspergillus* converts sugar into oxalic acid, the writers investigated the influence of this acid on nitrification. Their conclusion is negative.

726 – **Adsorption of Potassium by the Soil.** — Mc Call A. G.; Hildebrandt F. M. and Johnston E. S. (J. Phys. Chem., XX, 51-63, 1916). *Journal of the Society of Chemical Industry*, Vol. XXXV, No. 4, p. 267. London, Feb. 29, 1916.

To ascertain the effect of contact for a short time between a soil and a salt solution, and the influence of surface area upon the amount and rate of adsorption, an approximately five hundreth normal solution of potassium chloride was caused to percolate through a sandy loam soil, the potassium in the percolate being estimated colorimetrically. This soil was used in two different states: *a*) dried and passed through a 2 mm. sieve, and *b*) very finely ground in a porcelain-lined ball mill for 4 days. The apparatus consisted of a Pasteur-Chamberland filter tube surrounded by a brass jacket to hold the soil, the whole being enclosed in a porcelain-lined filter chamber, into which the solution was poured, and which was fitted with an air-tight cap in connection with an automobile tyre pump. The amount of potassium leached out of the soil samples by pure water was first ascertained: much more was dissolved from (*b*) than from (*a*); 20 gr. of (*a*) was treated with 250 cc. of the potassium chloride solution containing 62 parts per million of potassium, the flow was maintained at a uniform rate, and the percolate was collected in fractions of 50 cc. The amount of adsorbed potassium was then immediately found by leaching with pure water, at the same rate of flow. The amounts of potassium in the first five percolates were, 40, 36, 40, 44, and 59 p. p. m. respectively, and the corresponding amounts retained p. p. m. of dry soil were 58, 124, 181, 226 and 233. The leaching action of water gave 7, 11, 9, 9, 8 p. p. m. of potassium in the fractions. With soil sample (*b*), it was found very unexpectedly, that the amount of potassium

in the solution was increased and not decreased by its contact with the soil and this increase was only partly accounted for by the solvent action of the solution on the potassium in the soil. Allowing for this correction, a potassium chloride solution containing 78 p. p. m. gave fractional percolates containing 107, 91, 82 and 92 p. p. m. of potassium. By the subsequent leaching action of water, 39, 24, 21, 18, 15 and 18 p. p. m. of potassium were removed in the different fractions. The above case of negative adsorption is probably due to the solvent (water) being adsorbed more rapidly than the solute. Positive adsorption gradually diminishing and changing to negative adsorption was observed by Williams for certain electrolytes in water with blood charcoal, but the above is the first recorded instance of initial negative adsorption.

727 – **Basic Exchange in Soils.** — RICE, F. E. (J. Phys. Chem., 20, 214-227, 1916). *Journal of the Society of Chemical Industry*, Vol. XXXV, No. 8, p. 480. London, April 29, 1916.

Soils (33 grms.) from various parts of New York State were shaken with 100 cc. of normal potassium nitrate solution, allowed to stand over-night and filtered. In portions of the filtrate the hydrogen ions were determined by STÖRENSEN's method, and the lime requirement in pounds of lime per acre was determined by VEITCH's method, while other portions were used for qualitative tests of the bases present, and titration with fiftieth normal sodium hydroxide solution. It was found that in the case of so-called "acid" soils part of the cation of the salt was absorbed, while an equivalent quantity of bases from the soil was dissolved. The extracts thus obtained showed greater acidity than the original soils. This was attributed to the formation of hydrated aluminium oxide in the hydrolysis, together with equivalent quantities of free acid, and since the latter was strongly ionised while the former was lightly ionised and possibly in a colloidal state the resultant solution was distinctly acid. Water-soluble acid was found in only two samples of acid soils. Basic (as distinguished from "acid" soils) gave up to the salt solution more base than they adsorbed, but this was attributed not to basic exchange, but to solution of excess of the base.

728 – **Relation of Carbon bisulphide to Soil Organisms and Plant Growth.** — FRED E. B. (Agricultural Bacteriologist, Agricultural Experiment Station of the University of Wisconsin), in *Journal of Agricultural Research*, Vol. VI, No. 1, pp. 1-19, 2 plates. Washington, D. C., April 3, 1916.

In previous publications by this and other scientists, data were presented to show the beneficial action of bisulphide of carbon on the soil flora. As this action varies, fresh experiments were undertaken in order to ascertain the factors in these variations. There were studied : 1) the effect of different doses of carbon bisulphide ; 2) the effect of carbon bisulphide on different plants ; 3) the effect of carbon bisulphide on different soils. Some further experiments were carried out for the purpose of simultaneously studying the effect of carbon bisulphide on higher and lower plant forms. The fresh soil used in these experiments was sieved and potted in 2-gallon jars and the moisture maintained at half saturation. 2 per cent. of commercial carbon bisulphide was poured into small holes in the soil, which were

covered immediately. The changes in the soil flora were determined at regular intervals by plate counts and dilution counts. The formation of ammonia and nitrates was also measured at regular intervals. The plants used were buckwheat, clover, corn (maize), mustard, oats and rape.

These investigations prove that the addition of carbon bisulphide to soil exerts a decided effect on the fauna and flora of the soil. This is caracterized by a temporary reduction in the number of micro-organisms. Later, an enormous multiplication of bacteria takes place and an almost parallel increase in production of by-products or soluble nitrogen is noted. The ammonia content seems to follow the curve of bacterial growth and later gives way to larger amounts of nitrate. From the evidence it seems that carbon bisulphide in soil produces an increase in soluble compounds of nitrogen and sulphur.

In Miami soil carbon bisulphide benefited the growth of buckwheat, oats, and mustard. No relation seems to exist between plant stimulation with carbon busulphide and the form of the soluble nitrogen. In non-acid soils carbon bisulphide is most beneficial to sulphur-liking crops such as mustard. In all of the experiments, except acid soils, mustard showed an increased growth from the use of carbon bisulphide. Carbon bisulphide in peaty soil greatly benefits the growth of red clover. In sand cultures plus soluble plant food carbon bisulphide favors the growth of certain plants.

The data show clearly that carbon bisulphide does not act alike in all soils or toward all crops.

The article concludes with a bibliography of 13 works dealing with this question.

729 – **The Effect of Elemental Sulphur and of Calcium Sulphate on Certain of the Higher and Lower Forms of Plant Life.** — Pitz W. (Agricultural Experiment Station of the University of Wisconsin), in *Journal of Agricultural Research*, Vol. V, No. 16, pp. 771-780. Washington, D. C., 1916.

The problem of sulphur and sulphates in agriculture is still far from being solved, especially as regards their action on micro-organisms. In order to study this phase of the problem, 3 series of experiments were planned: 1) and 2) to note the effect of sulphur and sulphates upon the soil micro-organisms and upon pure cultures of legume bacteria; and 3) to note the effect of sulphur and sulphates on the growth of red clover (*Trifolium pratense*). For the experiments with mixed cultures fresh soil was used as an inoculum. For legume bacteria all materials were sterilised, and the nutrient medium was inoculated with a pure culture of bacteria from the nodules of red clover.

The various experiments show that calcium sulphate added to the soil has no perceptible effect on the total number of bacteria growing on gelatine plates, and does not materially affect the production of ammonia or nitrates (1). Large quantities of elemental sulphur, on the other hand, reduce the total number of bacteria growing on gelatine plates, while the addition

(1) See *B.* Feb. 1916, No. 144. (*Ed.*)

of 0.05 % of sulphur to the soil increases ammonia formation. Parallel with this increase there is a reduced formation of nitrates, which is probably due to the acidity or toxic effects resulting from oxidation of the sulphur.

Calcium sulphate stimulates the growth of pure cultures of red clover bacteria, both in nutrient solutions and in soil extracts. The increase is the same with 0.01 % as with 0.1 %. The growth of the clover roots is therefore as strongly stimulated by calcium sulphate in a quantity of 0.01 % as in quantity of 0.1 %. In small proportions calcium sulphate increases the production of red clover, as well as the formation of the nodules, while concentrates of 0.05 to 1 % do not stimulate stronger growth. The application of elemental sulphur to a clayey-sandy soil, both in quantities of 0.01 % and above, stimulates the growth of red clover, though not very much, without perceptibly affecting the growth of the roots or the nodules.

To sum up, according to the above experiments calcium sulphate produces no marked effect on the bacteria usually found present on gelatine plates. Nor does it stimulate the greater growth of the legume bacteria in pure cultures. It does, however, increase the production of red clover, the growth of its roots and the number of their nodules. On the other hand, the addition of sulphur increases ammonia formation, but reduces the total number of soil micro-organisms. It slightly stimulates red-clover production, but has no influence on the growth of its roots and the number of their nodules.

730 – **Factors influencing the Survival of Dried Soil Micro-organisms; Effect of Soil Solution.** — GILTNER W. and LANGWORTHY H. V. (Michigan Agricultural Experiment Station), in *Journal of Agricultural Research*, Vol. V, No. 20, pp. 927-942. Washington, D. C., 1915.

Publications on the above subject mention generally known facts, especially with regard to the survival of the spores, but devote no attention to the effect of various types of soils on the survival of the organisms dried therein. With the object of remedying this deficiency, the present writers undertook a series of experiments for the following purposes :

(1) To determine whether a micro-organism (*Pseudomonas radicicola*) can be protected by the solution in which it is suspended before being dried in quartz sand. In the first experiment the effect of saline physiological solutions with or without the addition of organic compounds was studied. In a second experiment the effect : (*a*) of the same solutions ; (*b*) of a culture bouillon ; (*c*) of milk, was compared with that of an extract of loamy garden soil.

(2) To compare the length of life of *Pseudomonas radicicola* dried in : (*a*) quartz sand : (*b*) garden loam.

(3) To compare the changes produced in the numbers and species of micro-organisms when a watery solution of rich garden loam was dried in 5 different kinds of soil : (*a*) compost ; (*b*) sand ; (*c*) loamy sand ; (*d*) clayey loam ; *e*) clay.

The following conclusions were reached :

(1) The survival of non-sporigenic bacteria in an air-dried soil is

partly due to the hygroscopic moisture retained by such soil. This is, however, not the only factor in operation, the survival of bacteria in a soil not being directly proportional to the size of its particles and its hygroscopic moisture.

(2) The bacteria under experiment survive drying in rich garden loam longer than in sand.

(3) If, before being subjected to drying in sand, the bacteria are suspended in a watery solution of the said soil, they survive longer than if such suspension were effected in a physiological salt solution.

(4) The watery solution of the said garden soil therefore must contain substances exerting a protective effect on the bacteria dried.

731 – **New Russian Studies of Nitrogen-fixing Bacteria.** — I. OMELIANSKIJ V. L. and SOLUNSKOV M. Sur la distribution des bacteries fixatrices d'azote dans les sols russes (On the Distribution of Nitrogen-fixing Bacteria in Russian soils) in *Archives des Sciences biologiques publiées par l'Institut impérial de médecine expérimentale à Petrograd* (French Edition), Vol. XVIII, No. 5, pp. 459-482, 3 plates. Petrograd, 1915. — II. OMELIANSKIJ V. L., Fixation de l'azote atmosphérique au moyen des cultures mixtes (Fixation of Atmospheric Nitrogen by Mixed Cultures), *Ibid.*, Vol. XVIII, No. 4, pp. 338-377, 1 plate. Petrograd, 1915. — III. OMELIANSKIJ V. L., Sur les rapports entre la fixation de l'azote et la consommation de matières organiques non azotées par les bacteries fixatrices d'azote. (On the Relations between Fixation of Nitrogen and the Consumption of Non-nitrogenous Organic Substances by Nitrogen-fixing Bacteria). *Ibid.*, Vol. XVIII, No. 4, pp. 327-337, 2 fig. Petrograd, 1915. — IV. OMELIANSKIJ V. L., Sur la physiologie et la biologie des bacteries fixatrices d'azote (The Physiology and Life History of Nitrogen-fixing Bacteria), *Ibid.*, Vol. XIX, No. 2, pp. 162-208, 1 plate. Petrograd, 1915.

I. *Distribution of Nitrogen-fixing Bacteria in Russian Soils.* M. OMELIANSKIJ and MLLE SOLUNSKOV start out from the principle that the universal occurrence of a given micro-organism with clearly defined chemical functions is one of the most conclusive arguments as to the importance of such micro-organism. They give the results of their enquiries caried out in the General Microbiology Section of the Imperial Institute of Experimental Medicine in Petrograd, on the occurrence of *Clostridium Pasteurianum*, an anaerobic nitrogen-fixing bacterium, and *Azotobacter chroococcum*, an aerobic nitrogen-fixing bacterium, in the soil of the Russian Empire. The investigations were made on soils taken from different depths in 12 localities of European and Asiatic Russia. Besides these, the presence of *Clostridium Pasteurianum* only was studied in 14 samples from other localities of the Empire. The results were as follows :

(1) *Azotobacter* and *Clostridium Pasteurianum* occur very widely in soils of different characters and in the most divergent regions of the Empire. In some few cases only the nitrogen-fixing agent was isolated, for instance *Azotobacter* in the sands of the Kirghese steppes and in the peat soils in the north of European Russia (province of Archangel).

(2) The races of *Azotobacter* and *Clostridium Pasteurianum* isolated in the enquiries are clearly morphologically distinct, especially those of *Clostridium Pasteurianum*.

(3) In these experiments, the two bacteria studied exhibited a different fixing power, weaker in *Azotobacter* than in *Clostridium Pasteurianum*,

but the figures were very close (1 to 3 mgms. of nitrogen per gram of sugar decomposed).

II. *Fixation of Atmospheric Nitrogen by Mixed Cultures.* — The work of different investigators has demonstrated that in mixed cultures nitrogen-fixing is more considerable than in the case of pure cultures. On the basis of this fact and assuming that mixed cultures approximate more closely to the natural life conditions of nitrogen-fixing bacteria, M. OMELIANSKIJ studied the fixation of nitrogen in cultures of a large number of races of *Azotobacter* and *Clostridium Pasteurianum* isolated from different Russian soils, associating with them many other micro-organisms usually accompanying them in the soil. From his many experiments he concludes that :

(1) The study of the biochemical reactions by means of which the bacteria in mixed cultures fix atmospheric nitrogen is interesting in several respects, as it brings out clearly the various aspects of the natural process occurring under conditions of combined action of the different organisms.

(2) The organisms acting in combination with the nitrogen-fixing bacteria in upper soil strata are very numerous and they play an extremely important part in the life of the soil.

(3) The synergetic activity of nitrogen-fixing and accompanying microbes is, both in laboratory experiments and under natural conditions (cultivable stratum of the soil), of a different character according to the properties of the species taking part in the process and their environment. In other cases the function of the satellite organism seems to consist in fixing the oxygen of the air and in creating the anaerobic environment (for *Clostridium Pasteurianum*). The species added to the cultures of nitrogen-fixing microbes sometimes supply the compounds of carbon needed for the process of fixing nitrogen as energetic substance. In the case of the combination : *Azotobacter* + *Clostridium Pasteurianum*, the function of the former is not confined to fixing the oxygen of the air only, and consequently to creating an anaerobic environment for the *Clostridium*, but this combination is also useful inasmuch as it destroys the injurious products of disassimilation created by the second (chiefly butyric acid) and maintains the action of the environment (*Azotobacter* is alkaligenic and the *Clostridium* acidogenic).

(4) The satellite species may also unfavourably affect the nitrogen-fixing microbe, either through products of assimilation or by consumption of the carbon compounds needed by this microbe for nitrogen-fixing. The energetic fixation of oxygen by the satellite aerobic species creates conditions favourable to the development of *Clostridium Pasteurianum*, but at the same time hinders the growth of the *Azotobacter*, which is necessarily aerobic.

(5) The form endowed with the maximum vitality and at the same time the most common form in which combination of the nitrogen-fixing organisms takes place in the upper soil strata is that of symbiosis between the aerobic and anaerobic nitrogen fixers, principally between *Azotobacter* and *Clostridium Pasteurianum*. In spite of the opposite properties of the

two species, their synergetic activity in the upper strata of the soil results in a harmonious mutual development producing the maximum economy in consumption of energetic substances.

III. *Relations between the Fixation of Nitrogen and the Consumption of Non-nitrogenous Organic Substances by the Nitrogen-fixing Bacteria.* — For these investigations, M. OMELIANSKIJ used an artificial mixture of *Azotobacter chroococcum*, an aerobic fixer, isolated from the soil of the Institute, and *Clostridium Pasteurianum*, an anaerobic fixer, isolated from the soils of a kitchen garden in the province of Volhynia The use of this mixed cultivation was for the same object as in the work last mentioned, a closer approximation to the actual conditions under which the simultaneous activity of the nitrogen-fixing microbes takes place in the soil.

The nutritive medium of this culture was composed as follows per 100 cc. : 80 cc. of drinking water, 20 cc. of linseed extract 5 % strength, 2 grams of dextrose, 0.1 gram of potassium phosphate, 0.05 g magnesium sulphate, 0.5 gram calcium carbonate. Dextrose was chosen as a non-nitrogenous substance because it is suitable as a food both for *Azotobacter* and *Clostridium*.

On the 6th April 1911, this food mixture was poured into 27 Vinogradskij flasks at the rate of 100 cubic centimetres to each ; 3 flasks were then left as controls in order to ascertain the quantity of nitrogen and sugar, and 24 were sown with the mixture of the two bacteria. During these experiments, which lasted 6 weeks, the flasks were maintained at a temperature of 21°-22° C. Every 5 days, 3 flasks were taken, in order to determine sugar in one by the Bertrand method, and nitrogen in the two others by the Kjeldahl method.

The principal results of the chemical analyses are grouped in the appended diagram, which brings out clearly the most interesting facts ascertained by the researches, namely, the existence of a close relation between the process of assimilation and that of dissassimilation in the cell, which leads to its organic growth. In this diagram, the ordinates exhibit the quantity of nitrogen fixed in milligrams and that of sugar decomposed in grams. The abscissae indicate the duration of the experiments in days.

On closer examination of the results obtained, it may be said that the process of fixation of nitrogen ran its course uninterruptedly until the available energetic substance was consumed.

The quantity of nitrogen fixed is relatively small (1.735 mgrms of nitrogen per gram of sugar decomposed), which must be put down to the low degree of activity of the bacterial strains employed in the experiments.

The curves of nitrogen fixed and sugar decomposed are generally parallel. They show a continuous increase throughout the experiment, the maximum rise taking place in the period between the 5th and 15th day.

A comparison between the productivity of the work of the bacteria at different periods (of 5 days each) of their life presents some interest. Completing the data of the diagram, it is found that the process of nitrogen fixation is at its best in the first period. The absolute quantity (0.24 mg) of the nitrogen fixed during the first 5 days is insignificant, but relatively

*Curves showing the Fixation of Nitrogen and Decomposition of Sugar in mixed cultures of Azotobacter chroococcum, and Clostridium Pasteurianum.*

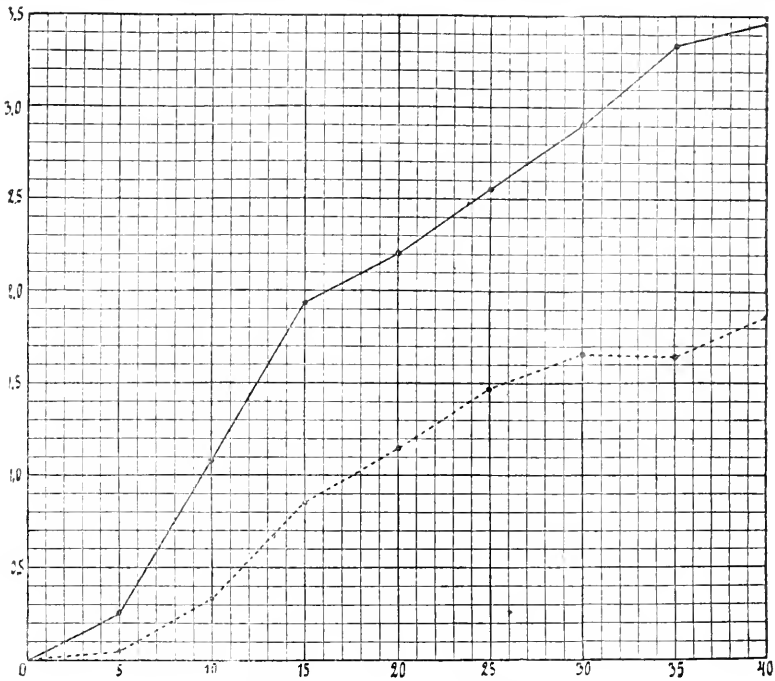


——— Gradual increase of the nitrogen fixed

..... Increase of the sugar decomposed.

to the quantity of sugar consumed, it represents the greatest degree of efficiency. The efficiency of the bacteria declines rapidly during the three following periods, after which, during the final period, it remains at nearly the same level. It may be said therefore that during the first periods of growth of the bacteria in question in the non-nitrogenous medium, that is to say, when the cells of the nitrogen fixers multiply energetically, their work is most efficient. The impression of the low efficiency of the work of these microbes gained from examining the ratio $\frac{+N}{-C}$ at the close of the experiment must be due to the depressing influence resulting from the process being in its last stages.

IV. *Physiology and Biology of Nitrogen-fixing Bacteria.*— M. OMELIANSKIJ has endeavoured to make a digest of the large amount of information contained in the literature, not systematised hitherto, in relation to the physiology and biology of *Azotobacter chroococcum*, supplementing them by his own researches. He deals with the following questions : methods of accumula-

tion of *Azotobacter* in cultures (selected cultures); methods employed to isolate it; its growth in different solid and liquid nutritive media; influence of temperature, aeration, etc. He devotes his chief attention to the problem of the fixation of free atmospheric nitrogen, and in particular the conditions ensuring the highest efficiency of the species under study, with reference not only to the absolute quantity of nitrogen fixed, but also to the quantity of non-nitrogenous substances oxydised.

732 – **Method for the Estimation of Hygroscopic Moisture in Soils.** — HAIGH W. D. (Sci. Proc. Roy. Dublin Soc., XIV, 529-534, 1915). *Journal of the Society of Chemical Industry*, Vol. XXXV, No. 4, p. 266, London, Feb. 29, 1916.

The ordinary method of determining the hygroscopic moisture (*i. e.*, the water left after air-drying) in a soil by heating it at about 100° C. for 12-24 hours, gives high results owing to the loss of volatile matter other than water. The method now proposed, which gives lower but strictly consistent results, consists in shaking the soil with powdered calcium carbide and measuring the acetylene evolved in a nitrometer. The mixing vessel is a thick glass tube shaped like a Kjeldahl flask but with a bent neck; a small test tube fits into the neck but cannot pass the bend. The carbide (about 3 times the weight of soil) is first placed in the bulb: the small tube with the soil is inserted in the upper, bent portion which is kept horizontal; and then the flexible joint is connected to the nitrometer. The tube is tilted to empty the soil on to the carbide, and the mixture is shaken; the acetylene comes off rapidly and can be measured within a few minutes. A blank experiment should be performed with ignited sand and a known weight of water. As found by other workers, the volume of acetylene liberated from 0.018 grms. of water measured 10.5 cc. instead of the theoretical 11.2 cc. The combined water contained in the hydrated silicates of a soil is practically unaffected by the carbide.

733 – **The Reaction of Soil and Measurements of Hydrogen-Ion Concentration.** — GILLESPIE L. J. C. (J. Washington Acad. Sc., VI, 7-16, 1916). *Journal of the Society of Chemical Industry*, Vol. XXXV, No. 4, p. 266, London, Feb. 29, 1916.

The reaction of a soil should be studied from the standpoints of quantity of acid substance, and of intensity of the acidity. The amount of lime or other neutralising materials required to correct acidity, depends upon the first, but probably the characteristic effects of acidity upon fertility are more clearly correlated with the latter, which can only be measured by determining the hydrogen-ion concentration. Twenty-two soils of seven distinct types were investigated from this point of view both by the electrometric and colorimetric methods. In both of these the soil was air-dried, passed through a coarse sieve, and then mixed with twice its weight of water. The electrolytic vessel, which was shaken continuously throughout the determination, contained a platinum electrode coated with palladium, as a means for filling the space above the suspended soil with pure hydrogen, and at its base a stop-cock to connect the liquid with a saturated solution of potassium chloride. The difference of potential between the platinum and a saturated potassium chloride calomel electrode was found by means of a very sensitive voltmeter.

In the colorimetric method, the liquid was first centrifuged, and after the indicator solution had been added, the colour produced was measured by comparison with that of a solution of known hydrogen-ion concentration. The indicators used were methyl red, the sodium salt of phenolsulphone-phthalein, phenolphthalein, the recently prepared tetrabromophenolsulphone-phthalein, dipropyl red, and bromothymol sulphone-phthalein. Each soil sample was tested with two of these indicators. The results were in close agreement with one another, and with the electrometric determination. The hydrogen-ion concentration expressed as the hydrogen-ion exponent of SÖRENSEN, varied from 4.4 to 8.6, the exponent 7 indicating neutrality. The application of the colorimetric method to soils under field conditions is now being investigated.

MANURES AND MANURING

734 – **Relation of Green Manures to the Failure of Certain Seedlings.** — FRED E. B. (Agricultural Bacteriologist, Agricultural Experiment Station of the University of Wisconsin), in *Journal of Agricultural Science*, Vol. V, No. 25, pp. 1161-1176, 2 plates. Washington, D. C., March 20, 1916.

In a previous report it had been shown that if green manures are turned under and cotton planted immediately, a decrease in germination may result, while if the operation is repeated three weeks later germination is perfectly normal.

With a view to studying this phenomenon, fresh experiments in jars and in the field were made with green manures of crimson clover, in the proportion of about 1 per cent. of the soil, and with different kinds of seeds. The effect of some products of decomposition, heat, bacteria and fungi was also studied.

The investigations as a whole confirmed the injurious action of green manure on seed germination. It appears to be due to some parasitic fungus (*Rhizoctonia* sp.). During the first period of decomposition of the green manure, many fungi develop, some of them having a destructive action on germs. Oil seeds in particular are very liable to be injured. Starchy seeds on the contrary are highly resistant. Cotton and soya seeds are extremely sensitive to green manure. The germination of flax, pea-nuts, hemp, mustard and clover is likewise reduced, though to a less extent, by the presence of decomposing vegetable tissue. The germination of buckwheat, corn, oats and wheat is not affected by green manure.

The injurious action of green manure on oil seeds is confined mostly to the first stages of decomposition. The experiments undertaken appeared to show that two weeks after the green manure has been turned in, it no longer has any serious harmful effect on the germination of oil seed. The addition of small quantities of lime appears to increase the injury to germination, the greater or less rapidity of the latter to some extent influencing the amount of such injury. Thus slow germination is marked by a high percentage of diseased seedlings.

Appended is a bibliography of 21 works relating to the question.

735 – **Hygienic, Scientific and Economic Disposal of Human Excreta.** — GARRIGOU F., in: I. *Comptes Rendus des Séances de l'Académie des Sciences*, Vol. 162, No. 17, pp. 646-651. Paris, April 25, 1916. — II. *Feuille d'Informations du Ministère de l'Agriculture*, XXIst Year, No. 18, pp. 10-11. Paris, May 2, 1916.

Various methods of sewage treatment have been proposed based on distillation of the sewage in the presence of lime, with the object of liberating ammonia, which is afterwards transformed into sulphate. The author has devised a method of sewage treatment dispensing with distillation and almost all the complicated apparatus it involves. The following is a description of it :

The solid and liquid matter are treated separately.

A) The operations on the *liquid matter* are based on the double decomposition taking place between sulphate of lime and carbonate of ammonia, and resulting in the formation of carbonate of lime and sulphate of ammonia.

The urine which has fermented sufficiently for the conversion of the urea into ammonium carbonate is emptied into a vat with water-tight lid. Finely powdered calcium sulphate (gypsum) crude or dehydrated is added, and the mixture is stirred up frequently. The lime is precipitated in the form of insoluble calcium carbonate, while the ammonia passes into the state of soluble ammonium sulphate. The liquid is allowed to settle. The calcium carbonate formed collects at the bottom of the vat, while the ammonium sulphate remains in the liquid which can be racked off.

This liquid can be concentrated in iron basins until the sulphate crystallises. It can also be absorbed by ash, sawdust, or completely dehydrated gypsum, and kept in that state until used. It gives off no disagreeable smell.

The sulphate of ammonia thus produced is very low in cost, being obtained from an ammonium carbonate derived from the urea in the urine, with the aid of sulphate of lime or gypsum which is very cheap.

In addition, the precipitated calcium carbonate, which carries with it mechanically considerable quantities of organic matter from the liquid treated, forms a manure of high market value owing to its content of organic nitrogen and other fertilising substances.

In case the whole of the ammonium carbonate in the urine has not been completely converted into sulphate by the calcium sulphate, the remainder can, by the addition of acids, be converted into nitrate or other inodorous ammonia salts, which add still more to the value of the liquid containing the sulphate of ammonia.

This mode of treatment of the liquid sewage can, owing to its simplicity, be used not only in large cities but also in small towns or villages and even on farms.

B) As regards the *solid matter*, it is separated from the liquid by settling. On reaching the works the sewage is emptied into covered and tightly closed settling basins in which the solid matter is deposited. The liquid is, after clarification, delivered into the fermentation basins, where it undergoes the operations described above.

The solid matter deposited at the bottom of the settling basins in the

form of thick mud is passed through the press filter if necessary and then put into autoclaves and heated to a temperature of 140° to 150° C. This temperature is maintained for 15 minutes, after which the steam exhaust of the autoclave is opened, and the steam passing out carries with it the ammonia salts. It passes through cool condensing coils, and is then delivered into vats containing sulphuric or nitric acid for the production of inodorous ammonium sulphate or nitrate.

In the autoclave there remains a perfectly dry, fine powder, ready for putting up in sacks, very rich in fertilising substances and completely sterilised. The condensation coils may, if necessary, be arranged at the bottom of the settling basins, so as to utilise the waste heat to increase the fermentation of the mud and produce the maximum quantity of ammonium carbonate.

The method of operation is thoroughly practical and hygienic. It ensures the maximum yield and does away with all the disadvantages of the ordinary methods of sewage disposal. Huge distillation appliances, unhealthy and repulsive smells, the expense of sterilising mixtures to be added to the sewage, are all done away with, while there is a saving in supplies of every kind, labour, plant and fuel, together with an increase in the agricultural value of the manure produced.

736 – **The Solubility of "Fluospar Slag" and Mineral Phosphates in Citric Acid.** — I. ROBERTSON G. S. The Influence of Fluospar on the Solubility of Basic Slag in Citric Acid. — *Journal of the Society of Chemical Industry*, Vol. XXXV, No. 4, pp. 216-217. London, 1916. — II. *Ibid.* The Solubility of Mineral Phosphates in Citric Acid, Part II (1). — *Ibid.*, pp. 217-220.

I. — During the past few years British steel manufacturers, particularly those using the basic open hearth process, have been introducing fluorspar into the furnace. Fluorspar produces a much more fusible slag and greater quantities of lime can therefore be added without making the slag too thick. Many thousands of tons of this "fluorspar slag" are produced annually and form a waste product ; one Teeside firm alone produces over 100 000 tons per annum ; certain firms even pay a few pence per ton to have the slag carried out to sea.

The peculiarity of basic slag produced by the use of fluorspar is that the solubility of the phosphate, according to the citric acid test, varies from 20-50 % instead of from 70-90 %.

Original "fluorspar slags," artificially prepared "fluorspar slags" and Tunisian rock phosphate were subjected to five consecutive half-hour-extractions with 500 cc. of 2 per cent citric acid. The results clearly show that the citric acid test gives no true idea of the solubility of the phosphate in "fluorspar slags" and affords no guide to its value to the plant.

The use of fluorspar in the manufacture of steel by the open hearth process results in the production of a phosphatic slag with low citric solubility.

Nevertheless the slag is completely soluble in citric acid if sufficient

(1) Part I, see *B.* March 1914, No. 211. (*Ed.*).

time is spent on the extraction. The phosphate or phosphates which the slag contains do not appear to be in combination with silica and they seem to bear a very close resemblance to those contained in mineral phosphates.

At the present time there is a very big demand for phosphatic manures, and if temporary difficulties, such as a lack of railway facilities and shortage of bags, could be to some extent mitigated there is no reason why these low citric soluble basic slags should not be placed on the agricultural market at a tempting price (1).

II. — The citric solubility of several classes of mineral phosphates has been determined and also the effect, upon the solubility of the phosphate, of fineness of grinding and calcining.

*Citric Solubility of Rock Phosphates.*

| Phosphoric acid dissolved. | Makatea refuses 1 mm. sieve. | Makatea passing "100" sieve. | Calcined Makatea passing "100" sieve. | Florida land pebble refuses "30" sieve. | Florida land pebble passing "100" sieve. | Calcined Florida land pebble passing "100" sieve *. | Algerian passing "100" sieve. | Calcined Algerian passing "100" sieve *. | Gafsa passing "100" sieve. | Calcined Gafsa passing "100" sieve *. | Belgian passing "100" sieve. | Calcined Belgian passing "100" sieve *. |
|---|---|---|---|---|---|---|---|---|---|---|---|---|
| | per cent | per cent | per cent | per cent | per cent | per cent | per cent | per cent | per cent | per cent | per cent | per cent |
| 1st extraction . . | 3.93 | 9.25 | 6.58 | 4.00 | 6.18 | 6.01 | 6.65 | 3.33 | 10.15 | 5.20 | 1.95 | 7.80 |
| 2nd extraction . . | 3.66 | 8.26 | 6.32 | 3.81 | 5.83 | 6.77 | 6.48 | 4.36 | 8.18 | 6.55 | 5.65 | 6.98 |
| 3rd extraction . . | 3.47 | 7.54 | 5.55 | 3.63 | 5.46 | 6.63 | 5.35 | 3.78 | 5.60 | 5.77 | 5.78 | 6.20 |
| 4th extraction . . | 3.28 | 6.03 | 4.63 | 3.23 | 5.14 | 5.41 | 4.00 | 3.10 | 1.93 | 4.49 | 4.95 | 4.53 |
| 5th extraction . . | 2.91 | 4.22 | 3.79 | 3.00 | 4.31 | 3.88 | 2.47 | 2.29 | — | 2.29 | 1.99 | 3.08 |
| Total extract . | 17.25 | 35.30 | 26.87 | 17.67 | 26.92 | 28.78 | 25.45 | 16.86 | 25.86 | 24.30 | 30.32 | 46.52 |
| Actual total . . | *38.90* | *38.24* | *38.24* | *33.27* | *31.50* | *31.50* | *27.27* | *27.27* | *25.35* | *25.35* | *19.80* | *50.55* |

* Free lime removed by sugar solution.

The results undoubtedly show that mineral phosphates are completely soluble in 2 % citric acid if a sufficient number of extracts are made. In the majority of the rock phosphates examined five extracts removed 90-100 % of the phosphoric acid present.

Even a small amount of free lime or calcium carbonate decreases substantially the solubility of mineral phosphates as judged by the citric acid test. When a large amount of calcium carbonate or free lime is present, the citric acid test, as commonly practised, is a test for lime and not for phosphates. It is important in this respect to distinguish between free lime and calcium carbonate, and lime actually entering into the composi-

(1) See *B.* Aug. 1915, No. 766; also *B.* Oct. 1915, No. 1010; *B.* Jan. 1916, No. 147 and *B.* Feb. 1916, No. 149. (*Ed.*).

tion of the phosphate. The higher the percentage of lime actually entering into the phosphate compound, the higher the citric solubility of the phosphate.

Fineness of grinding affects the total citric solubility of the mineral phosphates (judged by 5 extracts) to the extent of approximately 10 % decrease for each of the gradients : passes " 100 ", refuses "100 ", refuses " 60 " and refuses " 30 " sieve.

With one exception calcining produces a marked decrease in the citric solubility of mineral phosphates. The longer the calcining continues the more insoluble does the phosphate become.

The results judged as a whole confirm the conclusion of the former investigation (Part I, above quoted), namely, the worthlessness of the citric test as a means of establishing the relative value to the plant of phosphate manures. Rock phosphates are quite as soluble in a 0.25 per cent. hydrochloric acid solution as basic slag, and there is just as much reason in favour of using a weak solution of a mineral acid for a solvent as there is for using a 2 per cent. citric acid solution. According to the writer it would be absurd to consider basic slag as of no agricultural value because it is insoluble in water, and it is equally absurd to condemn mineral phosphates because they are not so soluble in citric acid as basic slag. There can be little doubt that, as a source of phosphoric acid for the plant, rock or mineral phosphates are just as valuable as basic slag.

737 – **Potash in Banana Stalks and Skins.** — ELLIS R. H.— I. Potash in the Banana Stalk, in *Journal of the Society of Chemical Industry*, Vol. XXXV, No. 8, pp. 456-457. London. April 29, 1916. — II. Note on the Presence of Potash in Banana Skins. *Ibid.*, No. 9, p. 521, May 5, 1916.

I. — When making an examination of the banana stalk with a view to the use of its fibre for paper-making, Mr. ELLIS found the juice of the stalk to be markedly alkaline. He therefore made an analysis, and found a large percentage of potash, and practically no soda. Another analysis was made by Mr. Hanley, of the Agricultural Department of Leeds University. The figures of both analyses are reproduced in Table I.

TABLE I. — *Composition of Stalk* :

| | Ellis | Hanley |
|---|---|---|
| *In original stalk :* | | |
| Water | 91.60 % | 92.70 % |
| Dried matter | 8.40 | 7.30 |
| Ash | 2.40 | 1.50 |
| Potash | 1.14 | 0.90 |
| *In dried matter :* | | |
| Ash | 29.90 | 20.50 |
| Potash | 13.73 | 12.35 |
| *In the ash :* | | |
| Potash | 45.90 | 59.10 |

The readings of this Table show that the dried matter of the stalk contains as much potash as does kainit.

In the juice of the stalk Mr. Hanley found 0.7 % of potash.

From the results obtained by Mr. Ellis, 1 ton of banana stalks will yield 188 lb. of dried matter containing 13.7 % of potash ($K_2O$), or 54 lb. of ash containing 47.5 % potash, or 25 lb. of pure potash. Over 4000 stalks are said to come into Leeds every week, having a total weight of 16,000 lb., representing 1340 lb. (about 12 cwt.) of dried matter as rich in potash as kainit.

In the discussion which followed delivery of the above paper to the Society, stress was laid on the importance of vegetable refuse from the markets as a source of potash, and it was proposed: 1) to set apart the refuse for analysis and treatment; 2) to analyse the ash obtained in refuse destructors, as a large percentage of it came from vegetable produce and consequently contained a quantity of potash.

II. — An analysis of banana skins gave the results contained in Table II.

TABLE II. — *Composition of Skins*

| | |
|---|---|
| *In original skin:* | |
| Water | 88.20 % |
| Dried matter | 11.80 |
| Ash | 1.77 |
| Potash | 1.05 |
| *In dried matter:* | |
| Ash | 15.00 |
| Potash | 9.03 |
| *In ash:* | |
| Potash | 57.16 |

These results are of some practical importance for the United Kingdom, which, one year with another, imports 9 million bunches averaging 180 bananas each, the skins of each bunch totalling a weight of 6.8 kg; thus it receives every year 61 235 tons of skins containing 7226 tons of dried matter with 9 % of potash. Besides this, the 9 million stalks weighing 1.8 kg each on the average, or 16 328 tons aggregate, supply 1372 tons of dried matter with 13.7 % of potash.

738 – **Waste of Tobacco Ash.** — BURRELL B. A., in *Chemical News*, Vol. 113, No. 2949, pp. 255-256. London, June 2, 1916.

The fact is recalled that the ash of tobacco, in the various forms in which the latter is smoked, represents on the average 30 % of the burnt leaf and contains 20 % of potash and 5 to 6 % of phosphoric acid. If hotel proprietors and restaurant keepers had tobacco ashes methodically collected, they would be rendering a service to the country in connection with the potash problem, and at the same time making a profit for themselves.

It is found that:

A cigar weighing 106.5 grains will give about 32.3 grains of ash, of which 6.5 grains is potash;

A cigarette weighing 27 grains will give 8.5 grains of ash, of which 1.75 grains is potash ;

A pipe holding 25.5 grains of tobacco will give 8 grains of ash with 1.6 grains of potash.

The results of systematic collecting of tobacco ash and unburnt tobacco also show that tobacco ash and unburnt tobacco from :

1) the smoke-room of a club, collected for eight days, weighed $9^3/_4$ ounces.

2) the lounge of a large hotel, collected for four days, weighed 13 ounces.

3) a large restaurant, collected for 10 days, weighed 2 lbs. 8 ozs.

4) a music hall, one tenth part of the auditorium, one performance only, weighed 4 ounces.

The tobacco consumed in the United Kingdom during the financial year 1913-1914 was 98,412,412 lbs.; the cigars imported weighed 1,331,802 lbs. This would give a total consumption of 44,529 tons, which would represent 13,359 tons of ash. Reckoning the latter quantity as kainit with 12.5 per cent. of potash, it would represent 21,376 tons of kainite worth nearly £ 51,000. In the spring of 1915 it was worth nearly three times as much.

739 – **The Question of Sulphate of Ammonia in Russia.** — I. KALINSKIJ B., Sulphate of Ammonia and Nitrate of Soda, in *Земледѣльческая Газета* (The Agricultural Gazette), No. 4 (120), pp. 85-88. Petrograd, 1916. — II. Circular of the Department of Agriculture, in *Подольскій Хозяинъ* (The Agriculture of Podolia), No. 9-10, p. 38. Vinnitza, 1915. — III. Circular of the Agronomic Institute of Moscow, *Ibid.*, No. 11-12, pp. 44-45. Vinnitza, 1915. — IV. MAKRINOV, J. A., New Method of hastening Nitrification, in *Земледѣльческая Газета.* (The Agricultural Gazette), No. 8 (124), pp. 198-201; No. 9 (125), pp. 224-227. Petrograd, 1916.

I. — The production of sulphate of ammonia in Southern Russia, where this industry is almost entirely concentrated, has during the last few years increased parallel with the development of the coke industry in the basin of the Donetz :

| | | | | | |
|---|---|---|---|---|---|
| In 1911, | the production | was | . . . . . | 491 | metric tons |
| In 1912 | " | " | " . . . . . | 4 013 | " " |
| In 1913 | " | " | " . . . . . | 13 808 | " " |
| In 1914 | " | " | " . . . . . | 17 176 | " " |

In 1915, this production reached 16 380 metric tons, and stocks at the end of the year amounted to 24 570 tons. It is anticipated that the production for this year will be 32 760 tons, so that this year Russia will have at its disposal about 57 330 tons of sulphate of ammonia (24 570 tons in stock and 32 760 tons manufactured in 1916).

Before the present war, almost the whole of the sulphate of ammonia was exported. It high price precluded its use as a fertiliser in Russia. Exportation having been stopped by the war, the price dropped to 29 francs per quintal (220 lbs). Importation of nitrate of soda being also suspended, Rus-

sian agriculture will be able to make use of a considerable part of the sulphate of ammonia. If the prices go down to between 24.5 and 19.5 francs per quintal, the utilisation of this manure even for cereal crops is perfectly certain, according to the Agronomic Institute of Moscow.

M. KALINSKIJ, in discussing whether Russia can now allow exportation of its sulphate of ammonia or should prohibit it, makes the following calculations for 1916: agriculture requires 27 846 tons; industry 16 380 tons and 4 914 tons must be kept in stock; making in all 49 140 tons. The quantity available for export would therefore be about 8 190 tons. The forecasts of consumption of sulphate of ammonia in Russia are based on that of nitrate of soda, which according to private but reliable data, was about 24 570 tons, distributed as follows (before the war):

| | | |
|---|---|---|
| Poland and Lithuania (except the government of Vilna) | 30 % | 7 370 tons |
| Baltic Provinces (and government of Vilna) | 25 % | 6 145 " |
| Kiev sugar beet growing region | 30 % | 7 370 " |
| Rest of Russia | 15 % | 3 685 " |
| | 100 % | 24 570 tons |

II and III. — The problem of the utmost possible utilisation of sulphate of ammonia being of great importance to Russian agriculture, the Department of Agriculture called the attention of farmers, agricultural associations and the zemstvos to the necessity for active propaganda in favour of this fertiliser. The Agronomic Institute of Moscow took steps in the same direction, and emphasised the necessity for collective purchases of sulphate of ammonia by the zemstvos and by agricultural associations. The Department of Agriculture has also instructed Prof. VOLOKITINE, Director of the School of Technical Chemistry at Petrograd, to undertake test experiments on the method of Professor MÜNTZ (nitrification of sulphate of ammonia in peat).

IV. — M. MAKRINOV deals with this latter question. After briefly reviewing the most recent results of sewage water purification, on the method of "activised" mud, he states that: 1), thanks to the action of the "activised" mud and the continuous passage of air, a very rapid conversion of ammoniacal compounds takes place parallel with a rapid decomposition of the complex organic substances; 2) the action of the "activised" substance and continuous passage of air enable the process of nitrification to be carried on in an isolated and very intense form, which may be utilised for the practical purpose of converting the large stocks of sulphate of ammonia into saltpetre.

740 – **Manuring Tests with the New Nitrogenous Manure "Guanol", in Germany.** — KOCH, in *Fühlings landwirtschaftliche Zeitung*, 65th Year, No. 5-6, pp. 145-158. Stuttgart, March 1-15, 1916.

Manuring tests were carried out to ascertain whether the good results given up to now by "Guanol" (treacle residue mixed with peat dust and sown with *Azotobacter*) (1) are not chiefly due to the bacte-

(1) See *B.* December 1915, No. 1257. (*Ed.*)

ria contained in the peat dust. In order to test the fertilising power of the peat dust, it was used in the place of "Guanol" in 2 series of experiments, and in a third it was replaced by nitrate of soda with a view to comparing the effects of the two forms of nitrogen. A trial was also made with "Guanol" sterilised at 100° C. to study the behaviour of the bacteria.

The manure employed contained not more than 1.6 grams of betain per 100 gms. of dried matter, so that 88 % of the betain had been converted by the bacteria at the time of manufacture. It was free from superphosphate, and contained : 48.3 % of dry matter, 3.77 % of nitrogen.

The tests were made with buckwheat, vetches, oats, beet, etc., in pots manured with quantities corresponding respectively to 364,607 and 1215 lbs per acre.

The tabulated results show that the peat dust added to treacle lees slightly reduces the fertilising power of the manure. The nitrogen in the peat exerts no action, the nitrogen of the lees being alone active.

Sterilised "Guanol" gives the same yield as when unsterilised, which proves that the bacteria in "Guanol" have no specific influence on the growth of the plant, at any rate where the soil is rich enough in humus. These experiments will be repeated in soils poor in organic matter. Possibly too the sterilisation was not complete enough to destroy all the bacteria of "Guanol"'.

In the 3 series where a dressing was applied in the proportion of 364, 607 and 1215 lbs of "Guanol" per acre, an increase in yield was obtained proportional to the increased quantity of manure. The nitrogen in the "Guanol" however does not act so well as the nitrogen in nitrate of soda, being present in slightly less assimilable forms.

The researches of the writer into the nitrification of "Guanol" showed that at the end of 8 weeks 30.04 % of the nitrogen of "Guanol" was converted into nitric acid. The nitrogen of nitrate of soda is more easily conveyed into the subsoil by water than that of "Guanol". These enquiries also proved that the specific bacteria of "Guanol" do not promote ammonification or nitrification to any great extent.

Other manuring tests undertaken on grass-lands, grain crops, beets, etc., are not yet completed.

AGRICULTURAL BOTANY, CHEMISTRY AND PHYSIOLOGY OF PLANTS.

741 – **Studies on the Root System of Plants, in Reference to Selection and Drought Resistance.** — MODESTOV A. P.: I. Differences in the Dimensions of the Root System in different Types of Cultivated Plants, in *Корневая система травянистых растений* (Root System of Cultivated Plants), Part I, pp. 11-44 + 2 tables + 3 plates. Moscow, 1915. — II. Depth reached by Roots under normal Conditions of Growth. *Ibid.*, pp. 46-80 + 14 tables and diagrams. — III. Contribution to the Study of the Root System of Flax. *Ibid.*, pp. 101-118 + 1 table + 1 diagram.

Remarkably little study having been devoted to the underground portions of plants as compared with the parts above ground, the writer undertook a series of methodical investigations of the root system of herbaceous plants, cultivated and wild, in the laboratories and experimental Stations of the Agronomic Institute of Moscow, with the assistance of the Department of Agriculture. The starting point in these enquiries was the fact,

established by the researches of DEHÉRAIN, MONVOISIN and KOSOROTOV, that there is a relation between the depth to which plants extend their roots and their resistance to drought. Assuming, therefore, within the limitations of a given species, the plants most resistant to drought are those which possess among other things a root system carried to a greater depth, stress is laid on the need for the following :

1) Statistical investigations of the depth reached by the roots of all plants, cultivated and wild, of interest to agriculture ;

2) Investigations into the " metric differences " (i. e. in length and weight) of the root system of the different species and varieties of cultivated plants.

3) Investigations into the fixation and the increase by selection of the power of deep root growth.

INVESTIGATIONS INTO THE ROOT SYSTEM OF OATS, WHEAT, FLAX AND PEAS. — These were carried out in 1914, in wooden boxes of 2 different sizes : (1) big boxes with 0.162 square metres base area (0.18 × 0.09m.) and 1.77 m. in height, used for plants which were brought to maturity ; (2) Small boxes (0.162 sq. metres base area and 0.88 m. height) for the plants removed in the 1st phase of vegetation. The soil was taken from the upper strata of the fields of the Institute. The roots were washed by a jet of water delivered by a pump, and afterwards numbered and straightway put into formalin where they remained until the winter, when they were dried and studied.

The plants taken out of the formalin were washed with water to remove any disagreeable smell, afterwards dried on cardboard, and their aerial and underground parts were then measured and weighed separately for each box. The roots for successive soil layers of 25 cm were also measured, in order to determine the amount of roots in each layer. The resulting data were divided by the number of plants in each box, and this result multiplied by 100, so as to reduce all measurements to one unit, the weight of 100 individuals. The measurements of the length of the aerial and underground parts were alone taken in calculating the maximum, but they are sufficient in view of the preliminary nature of the investigations.

At the beginning of June there were sown : 10 varieties of oats, 8 of spring wheat, 4 of flax and 3 of peas; for each variety 4 boxes were used, 2 large and 2 small, so as to have 100 tests in all. The seeds were taken exclusively from the *pure lines* obtained at the selection Station of the Agronomic Institute of Moscow, because the preliminary studies carried out with commercial oat seeds had given very divergent results as regards downward growth of the root system. In this connection mention may be made of the tests in the open field carried out by the writer in 1915, with pure lines of flax, at the flax selection Station. The depths of the roots for a given line was studied in a considerable number of individuals (100) and over an area of some square metres ; it was found that the maximum depth and spread of the roots in the different soil strata was everywhere the same; the maximum depth of the roots ranged from 44 to 53 cm. between one plot and another. In other words, tests have shown that there is a

synchronal constancy in the downward growth of the root system in individuals of the same pure line (of flax).

The enquiries of the writer into the length and weight of the root systems of oats, wheat and flax establish a *clear and essential difference between the length (and weight) in different forms of oats, spring wheat and flax.*

Table I summarises the most important results of the investigations in relation to oats.

The difference between root-length in the different varieties of oats therefore varies greatly, with a maximum of about 1 metre (186.0-101.0 = 85 cm). Then, on comparing the root-lengths with the time of ripening, MODESTOV notes an interesting fact : the longer the roots, the greater the time required for ripening. In other words, the length of the roots is proportional to the length of life of the plant. The author explains this phenomenon by saying that early varieties develop during the summer

TABLE I. — *Results of Investigations into the Root System of Oats.*

| Numbers of varieties | Length of Roots | Total weight of underground parts of 100 plants | Name of variety from which the pure line was selected out | Ripening |
|---|---|---|---|---|
| A – 337 I. . . . . | 186 cm | 45.56 g | « Gudan » (*Avena diffusa* var. *brunnea*) | Late |
| A – 305 I. . . . . | 178.5 | 70.85 | « Ghigantskij rasviesistij » (*A. orientalis* var. *flava*) | Medium late |
| A – 331 c. . . . . | 170 | 49.40 | « Bielianka » (*A. diffusa* var. *mutica*) | Medium |
| A – 329 c. . . . . | 156 | 40.73 | « Khersonskij Rukhlik » (*A. orientalis* var. *obtusata*) | Fairly early |
| A – 4020 . . . . . | 150 | 53.20 | « New Market » (*A. diffusa* var. *trisperma*) | Medium |
| C – 4160 . . . . . | 138 | 97.65 | « Scotch Angus » (*A. diffusa* var. *mutica*) | Medium late |
| A – 317 c. . . . . | 137 | 35.54 | Australian Oat (*A. diffusa* var. *aristata*) | Early |
| A – 4114 c . . . . . | 101 | 29.90 | Nemertchansk Oat (*A. diffusa* var. *mutica*) | Very early |

period when the moisture has not yet passed through the deeper strata of the soil, and the roots, being able to find an adequate quantity of it, need not lengthen out. This property, peculiar to early varieties (short-root system), has been fixed by heredity and asserted itself in the cultivations in boxes, i. e. in an environment different from the natural one. In the varieties which ripen later, things happen differently : the plants develop in the period when the moisture has already traversed the deepest strata,

and they are compelled to push out their roots in order to get at it. In this case again the peculiar property of the variety (long-root system) has been fixed by heredity and asserted itself in the trial cultivations.

In addition to the length of roots, there were also studied : the total weight of the plant, the weight of the overground and underground parts separately, the distribution of the root stock in the different strata of the soil. As regards the weight, it is found that the length of the root system is not proportional to its total weight (see Table I) and that, in the majority of cases, the roots, when increasing in length, show a relative reduction in weight. With respect to the distribution of the roots in the different layers (25 cm each) it varies greatly (as stated above) according to the variety. On comparing the different varieties, however, it was found that No. 305 I for instance has long roots which are more abundant in the tilled stratum of the soil than those of another kind with long roots, a fact which must unquestionably be of very great importance.

The studies of the other plants, spring wheat, flax and peas, as regards difference of root lengths in the different varieties, confirmed the results obtained with oats, which will probably also hold good for other cultivated plants. For instance, *Triticum vulgare* var. *ferrugineum* No. III has roots 90 cm in lengh, while those of *Triticum dicoccum* var. *farrum* attain 182 cm. The studies of flax were repeated in 1915 in boxes (they were unsuccessful owing to the hail) and in the field. They bore on: (1) the " metric differences " of the root system in the different pure lines of the plant ; (2) the constancy of depth of roots within the limits of the pure line ; (3) the influence of different soils and water (water cultures) on the growth of the root system ; (4) the influence of moisture on the development of the root ; (5) the development of the root at different vegetative periods ; (6) the daily growth of the roots ; (7) the influence of the depth of seed-planting on the development of the roots ; (8) the root system of the principal weeds in flax fields ; (9) the stereometric distribution of the roots in the soil. The most important results are as follows :

Flax grown for fibre generally has a weaker and shallower root system than that grown for seed ; if the root of the second kind reaches a depth of 70 cm, that of the first does not exceed 40-57 cm. Moreover, the roots of the seed flax are more robust, coarser and closer, a fact explained by the southern origin of this plant, which endeavours to adapt its roots to an inadequate water supply. As regards root development at different periods of vegetation, 3 periods have been distinguished : (1) the initial period, when the flax plantlet has only 10 to 12 leaves; in this period the roots reach down to a depth of 21 cm., maintaining a vertical direction; the distribution of the roots in the different layers of soil is almost uniform ; (2) in the 2nd period, the beginning of anthesis, the roots reach 52 cm, and the uniformity of their distribution in the different layers disappears, the bulk of the roots lying within the limits of 20 cm, representing the depth of the first period ; beyond the second decimetre a considerable reduction in the mass of roots is observed, only the few main roots with little subdivision being found ; (3) in the 3rd period, the end of anthesis, the roots reach a depth of 65 cm

and the character of the root system is the same as in the preceding period. The growth of the roots continued after the end of anthesis (when that of the parts above ground had ceased) as was ascertained from the observations of daily development of the root system by means of " observation boxes " fitted with a glass wall. In the roots of flax there is a characteristic winding observed in all the periods of life of the plant. The influence of the depth of the seeds on the development of the root system of flax was not found so clear and decisive as in the case of oats, but differences do exist and must be taken into account in the researches.

STUDIES OF ROOT LENGTH UNDER NATURAL CONDITIONS OF DEVELOPMENT. — After reviewing the results arrived at by different investigators of the root system, with a view to co-ordinating them, the writer describes his own experiments carried out on a plot of the experimental field of the Agronomic Institute of Moscow. He adopted the method of DEHÉRAIN, cultivation on inclined planes, modifying and completing it. He carried out cultivation : (1) on a natural soil profile by digging a trench 281.6 cm wide, and 176 cm deep, with bottom rising gradually towards the surface of the field so that the plants were not on banked-up soil, as at Grignon, but at field level : (2) cultivation on inclined planes, utilising for this purpose the embanking work carried out 40 years ago for water-regulation purposes. The length of the roots was measured at 3 different times, namely : 1) germination, 2) flowering, 3) fructification. The results are summed up in Table II, which also indicates the differences in the length of the roots in successive periods in order to bring out more clearly the behaviour of the root system of each plant.

On analysing the data of Table II, it is seen that, in their first period of life, the plants under investigation had already developed their root system to such an extent as to penetrate deeper layers than those subject to ordinary tillage.

Starting from the idea of aerial vegetative levels, the writer gives the following scheme of underground vegetative levels.

The first level, down to 44 cm. depth from the surface, comprises the root system of short-rooted plants, chiefly weeds, annual or biennial, the typical representatives of which are, for instance : *Capsella Bursa-pastoris, Viola tricolor, Thlaspi arvense* and *Berteroa incana ;* among cultivated plants, buckwheat belongs to this group.

The second level (between 44 and 88 cm. depth) is occupied by the root ends of short-rooted cultivated plants, for instance : *Sinapis, Linum, Vicia sativa, Pisum arvense,* etc.

The third level (88,139, 174 cm.) comprises the root ends of long-rooted cultivated plants : *Vicia villosa, Panicum miliaceum, Avena sativa* and *Solanum tuberosum,* etc.

Next there is a fourth level, comprising only the root ends of long-rooted wild herbaceous plants, as for instance : *Vicia Cracca, Potentilla argentea, Tanacetum vulgare,* etc.

Finally, the deepest level found lies between 264 and 352 cm.; it con-

TABLE II. — *Length of Roots at different Periods of Vegetation.*

| | Name of plant | 1st period: Germination | 2nd period: Flowering | 3rd period: Fructification | Differences between the 2nd and the 1st period | Differences between the 3rd and 2nd period |
|---|---|---|---|---|---|---|
| | A. – Cultivtn. on natural profile: | | | | | |
| | 1. *Avena sativa* | 79.2 cm. | 132.0 cm. | 140.8 cm. | 52.8 cm. | 8.8 cm. |
| | 2. *Linum usitatissimum* | 35.2 | 52.8 | 70.4 | 17.6 | 17.6 |
| | 3. *Vicia sativa* | 26.4 | 88.0 | 88.0 | 61.6 | 0.0 |
| Weeds | 4. *Raphanus Raphanistrum* | 13.2 | 30.8 | 35.2 | 17.6 | 4.4 |
| Weeds | 5. *Chenopodium album* | 26.4 | 30.8 | 35.2 | 4.4 | 4.4 |
| | B. – Cultivtn. on embankment: | | | | | |
| | 6. *Avena sativa* | 52.8 | 92.4 | 127.6 | 39.6 | 35.2 |
| | 7. *Panicum miliaceum* | 39.6 | 92.4 | unwashed roots | 52.8 | — |
| | 8. *Zea mays* | 30.8 | failure | | | |
| | 9. *Lupinus albus* | 52.8 | left till spring of 1915 | | — | — |
| | 10. *Vicia Faba* | 35.2 | 70.4 | unwashed roots | 35.2 | — |
| | 11. *Vicia sativa* | 30.8 | 79.2 | 83.6 | 48.1 | 4.4 |
| | 12. *Vicia villosa* | 30.8 | 74.8 | 105.5 | 44.0 | 30.8 |
| | 13. *Pisum arvense* | 48.4 | 74.8 | 88.0 | 26.4 | 13.2 |
| | 14. *Linum usitatissimum* | 35.2 | 70.4 | 74.2 | 35.2 | 8.8 |
| | 15. *Sinapis alba* | 39.6 | 48.4 | 70.4 | 8.8 | 30.8 |
| | 16. *Polygonum Fagopyrum* | 26.4 | 48.4 | unwashed roots | 22.0 | — |
| | 17. *Helianthus annuus* | 30.8 | failures | | | |
| | 18. *Cannabis sativa* | 35.2 | failures | | | |
| | 19. *Solanum tuberosum* | 61.6 | 101.2 | 123.2 | 39.6 | 32.0 |
| Weeds | 20. *Raphanus Raphanistrum* | 26.4 | 52.8 | 52.8 | 26.4 | 0.0 |
| Weeds | 21. *Capsella Bursa-pastoris* | not yet germinated | 26.4 | 39.6 | — | 13.2 |
| Weeds | 22. *Viola tricolor* | not yet germinated | 35.2 | 48.4 | — | 13.2 |
| Weeds | 23. *Thlaspi arvense* | not yet germinated | 35.2 | 48.4 | — | 13.2 |
| Weeds | 24. *Chenopodium album* | not yet germinated | 44.0 | 44.0 | — | 0.0 |
| Weeds | 25. *Berteroa incana* | not yet germinated | 48.4 | 52.8 | — | 4.4 |
| Weeds | 26. *Agrostemma Githago* | 26.4 | 66.0 | 88.0 | 39.6 | 22.0 |
| Weeds | 27. *Centaurea Cyanus* | 26.4 | 66.0 | 105.6 | 39.6 | 39.6 |

tains the root ends of perennial herbaceous plants as for instance the species of *Rumex*. Lucerne and some lupins also belong to this group.

On comparing the results of growing some cultivated plants (*Avena sativa*, *Vicia sativa* and *Linum usitatissimum*) on a natural profile and on banked up earth, and considering that the compactness of the soil in these two cases must be different. the Author is of opinion that, though it cannot be maintained that the compactness of the soil makes no difference to the roots, it is impossible to share the prevailing view according to which roots should penetrate deeper in less compact soils. He does not however wish to draw an *a priori* conclusion from this fact before making thorough and conclusive investigations. He confines himself to recalling what was said by HENSEN as to the importance of the tunnels left by earth-worms for the extension of roots, and he adds that a similar function is also served by the channels formed by the roots of dead plants. That is why living roots can penetrate even compact soils fairly easily. One might, he says, draw a conclusion which seems a paradox at first sight, namely that deep-rooted perennial weeds, so injurious to the farmer, may at the same time be useful in paving the way for the roots of cultivated plants, which, by penetrating deeper, are sure of success in struggling against drought, and best utilise the nutritive substances of the soil.

A special chapter contains a Bibliography of the subject (552 works); it will be completed later.

742 – **Changes in the Chemical Composition of Rye Seed through the Action of some Forms of *Fusarium*.** — POMASKIJ A. in *Министерство Земледѣлія. Бюро по Микологіи и Фитопатологіи Ученаго Комитета. Матеріалы по Микологіи и Фитопатологіи Россіи*. Ministry of Agriculture, Office of Mycology and Pathology of the Scientific Committee. Matter relating to Mycology and Plant Diseases. Part 4, pp. 77-106. Petrograd, 1915.

The initiative of continuation of the investigations relating to "pianij khlieb" ("intoxicating bread") the intoxication being caused by the products of alteration of the grain by *Fusarium*) is due to A. A. JATCHEVSKIJ, Director of the Office of Mycology, who has put forward the hypothesis that not only *Fusarium roseum*, but all forms of *Fusarium* similar both from the morphological and physiological point of view, may equally act on the grain, decomposing the protein substances and forming a toxin analogous to the supposed nitrogenous glucoside, isolated by O GABRILOVITCH in the pure culture of *Fusarium roseum* Link on rye. On the basis of this hypothesis the writer, together with A. A. JATCHEVSKIJ and N. A. NAUMOV, carried out a series of experiments the object of which was: 1) to isolate and further study the toxin of intoxicating bread; 2) to make a chemical analysis of the mycelium of the different forms of *Fusarium*.

The present work is only the first part and contains the results of the qualitative and quantitative analysis of rye grain infested by *Fusarium*, such analysis being indispensable for further work, as was proved by the preliminary experiments on the isolation of the toxin. The material used was: pure cultures of *Fusarium* prepared in the laboratory, and the original Petrusk variety of rye infested with *Fusarium roseum* Link, coming from the

region of Ussurijsk, in Siberia ; two samples were also taken of the rye in question, infested with *F. subulatum* App. and Woll., and originating one from the province of Tula, European Russia, and the other from the region of Ussurijsk ; there were also utilised two samples of " Vasa " rye, infected with the pure culture of the above mentioned *Fusarium*, and finally, two uninfected and two sterilised samples of the same rye.

From the moment of inoculation with *Fusarium*, the culture was in a separate room away from the direct light of the sun, and kept at a constant temperature of 18-20° C. The analyses were made at the end of 10, 20, 30 and 60 days after the beginning of the experiment.

*Results*. 1) The vital activity of the two forms of *Fusarium* on the rye grains is accompanied by a large reduction of dry matter. Thus, in the analysis of the culture of *Fusarium roseum* made after 10 days, the loss of dry matter is about ⅓ of the total quantity : when the experiment is further prolonged, the loss of dry matter increases, amounting to ³/₄ of the total on the 60th day. *Fusarium subulatum* in a 30 days culture exhibits an activity lower than that of the first *Fusarium*, but the difference afterwards disappears.

2) The dry substance lost is chiefly starch and albumin.

3) The loss of starch in one month is 61 to 80 %, and in two months 80 to 89 % of the initial quantity.

4) The vital activity of *Fusarium* is accompanied by the decomposition of albumin with loss of nitrogen. This loss is not so large as in the case of starch, being about 5 % in the culture of *F. roseum* for the first ten days. It is still less, (2.7 %) in a culture of *F. subulatum* one month old. At the 60th day, however, the losses of nitrogen for both forms of *Fusarium* increase, with an average of 12 to 16 % common to both.

5) Both forms of *Fusarium* act equally on the rye, reducing the starch and decomposing the albumin, with production of ammonia.

6) The products of splitting up of albumin, as found from the analyses made, are the following : albumoses, peptones, amino-acids, organic bases, ammonia and a toxin (presumed to be a nitrogenous glucoside). The process of decomposition of albumin was most energetic in the cultures of *F. roseum* and a little less so in those of *F. subulatum*. The numerical data in relation to the quantity of decomposition products formed allow of the following description of the hydrolysis of albumin produced by *Fusarium* : during the first month of the experiment there are chiefly formed amino-acids, organic bases, peptones, nitrogenous glucosides, and a small quantity of ammonia, while in the second month the hydrolysis grows more energetic with formation of a considerable quantity of ammonia. The practical bearing of these observations is that, for the purpose of isolating and studying the poisonous principles of " intoxicating bread ", the amino-acids and organic bases, a 3 to 4 weeks old culture of *Fusarium* may be used with absolute certainty of success.

7) The pentosans disappear fairly quickly, chiefly during the first 30 days ; during the subsequent 30 days, the loss only increases 6 to 7 % ; the total loss being 75 % of the initial quantity.

8) As regards cellulose, during the first 30 days some increase in its quantity is observable, due to energetic synthesis of chitin, which masks the loss of the crude cellulose. In the second month this synthesis slows down, and the decomposition of cellulose then becomes evident.

9) With respect to fats, the results are that, in the course of the first 30 days, their splitting up is masked by the synthesis due to *Fusarium*; in the second month, the breaking up process predominates, and a final loss of 21 to 51 % results. Under the influence of *Fusarium*, the iodine index of the fatty substance diminishes, while the acidity index increases, which means that in the splitting up of fats by *Fusarium* two processes occur concurrently; saponification of the glycerides, and oxidation of the unsaturated acids.

10) The percentage of acidity in the watery solution does not increase.

11) The quantity of mono-saccharides in the cultures of *Fusarium* is small and does not grow.

12) In a thirty days culture, no disaccharides were found which could be inverted with a 1 % solution of hydrochloric acid; after 60 days, they are present in a minute quantity (up to 0.25 %).

13) In view of the wide occurrence of "intoxicating bread" in the northern and central Governments of Russia, produced not only by *Fusarium roseum*, but by other forms of *Fusarium* also, the writer urges that the utmost attention should be given to the phenomenon in question.

743 – **Change in the Specific Gravity and in the Starch and Dry Matter Content of Potatoes during Storage.** — SZELL L., in *Kisérletügyi Közlemények* (Bulletin of Hungarian Agronomic Stations), Vol. XVIII, Part 5-6, pp. 1020-1028. Budapest, 1915.

In October 1913, two varieties of potato: "Richter-Imperator" and "Up to date" from the 1913 crop were stored, partly in heaps on the field and partly in cellars. In the cellar-stored potatoes the specific gravity and the content of starch and dry substance were determined every fortnight; the same figures for the other potatoes were determined before stacking up and after storage. The results brought out the following facts:

The specific gravity and the contents of starch and dry substance (deduced from the specific gravity) increased generally in both varieties during cellar storage, but decreased in the field-stored potatoes. It follows that it is more economic to store potatoes in well-ventilated cellars than in heaps.

The increase in specific gravity of these two varieties of potatoes stored in cellars did not take place regularly, except before the tubers germinated. This must be attributed on the one hand to the different factors acting on the stored potatoes, such as healthy condition, respiration, germinating stage of the tuber, dampness of cellars, temperature, etc., and on the other hand to the fact that the results of the different methods of determining the specific gravity are influenced by the following factors: size, shape, maturity, hollows in the tubers, structure of skin, depth of eyes, adhesion of the water to the surface of the tubers, etc.

Determinations of specific gravity repeatedly carried out on specimens of the same class (cellar-stored) proved that the divergencies between the maximum and minimum values were greater in "Imperator" than in "Up to date". In the former the minimum content of starch was 13.9 % and the maximum 16.6 %, while in the latter the minimum content was 12.3 % and the maximum 13.9 %. Therefore the range was 2.7 % in "Imperator" and 1.6 % in "Up to date". The difference in the range of values in these two varieties is not merely accidental, but appears to be related to the fact that in "Imperator", especially in large tubers, big hollows occur more frequently, and this variety is more liable to rot than the other. This observation if practically applied to other varieties of potatoes might have useful results.

The variations in the specific gravity of potatoes checked by accurate analyses again confirm the fact that the usual rapid method of determination of starch and dry substance based on an estimation of specific gravity of potatoes furnishes only approximate and unreliable results.

744 – **Rapid action of Saline Solutions on Living Plants: Reversible Displacement of a part of the Basic Substances contained in the plant.** — DEVAUX HENRY, in *Comptes Rendus de l'Académie des Sciences*, Vol. 162, No. 15, pp. 501-503. Paris, April 10, 1916.

By previous studies the writer ascertained that the cell walls, and in particular the pectose they contain, are able to fix energetically an appreciable quantity of all the bases present in the form of salts. Prolonged washing in distilled water does not remove the metals thus fixed. On the other hand, steeping for a short time in the solution of another metal causes the immediate separation of the metal which distilled water had been unable to remove. These phenomena of mutual displacements are reversible. Just as alkaline metals can be displaced by all others, in particular calcium, the latter can in turn be expelled by alkaline metals.

These results at once suggested the question whether the interchanges observed on isolated cell walls also take place in living plants.

The question is answered by the following investigations:

A 10 to 15 gram lot of some aquatic plant was placed in a suitable vessel and carefully washed with distilled water (distillation carried out in glass in order to avoid the marked traces of copper or lead frequently found in commercial distilled water), after which, it was subjected to the following steepings of 30 minutes each: 1) in 250 cubic cc. of distilled water; 2) after washing with distilled water, in 250 cubic cc. of 1 per 1000 saline solution; 3) after careful washing with distilled water, in 250 cc. of distilled water. The liquid was tested with oxalate of ammonia after each maceration. Result: no calcium after the first and third maceration; presence of calcium after the second maceration (in saline solution).

It follows from these experiments that a very rapid decalcifying action of the plant was produced by the alkaline salts present in the solutions employed. This decalcification is a general phenomenon, having been observed by the writer in various plants (phanerogams, cryptogams, aquatic roots, terrestrial plant roots, etc.) and with different salts. The decalcifying salt may be an alkali or alkaline earth, but it may also have any acid

radical. Any one of these salts causes the immediate separation of a little calcium, which increases as the action is prolonged, and finally represents a considerable proportion of the total weight of calcium in the plant.

It is not only calcium which is thus expelled from living plants by any other metal present in the state of saline solution. For instance, potassium is also separated on treating the plant with a calcium salt. Thus the cycle is complete for all alkaline or alkaline-earth metals. The calcium in plants is expelled by the salts of other metals, but the other metals are expelled by the salts of calcium. It is a perfectly reversible phenomenon, in which the action of the most abundant salt preponderates.

There is a remarkable similarity between the absorbent properties of the soil for saline solution and those exhibited by living plants. In both cases the fixation relates mainly to the bases, and these bases can expel each other reversibly. This forms the direct demonstration of a contention put forward by the writer in 1904; "the pectose in the walls of root hairs being in close contact with the particles of the soil, the whole together, soil and walls, forms a colloidal system having the same properties of absorption everywhere. The bases are not held and kept in reserve in the soil but also in the cell wall within immediate reach of the protoplasm". Indeed there is nothing to show that the cell content itself does not take part in the exchanges, and this simple hypothesis shows the importance which may attach to the study of these reversible exchanges in living tissues.

745 – **The Relations between the Presence of Magnesium in Leaves and the Function of Assimilation.** — ANDRÈ G., in *Comptes Rendus de l'Académie des Sciences*, Vol. 162, No. 15, pp. 563-566. Paris, April 10, 1914.

Several authors have proved that crude chlorophyll, extracted from leaves by alcohol or benzene always furnishes an ash in the composition of which magnesium phosphate predominates; other more recent work has also shown that magnesium is the only fixed element forming a part of the molecule of chlorophyll; finally, MLLE MAMELI demonstrated that the quantity of pigment forming in the assimilating organs is related to the weight of magnesium supplied to the plant.

If magnesium plays so special a part in the molecule of chlorophyll, it might be expected that the weight of this element would be greater in proportion as the process of assimilation reaches greater intensity in the plants from which it is extracted. The writer therefore, at different vegetative periods, detached a number of leaves from different species of plants, dried and crushed them, afterwards extracting them by heating with ether and afterwards with alcohol. He measured the magnesium and phosphorus in the product of the extraction. He thus determined the weight of phosphorus (reckoned as $H_3PO_4$) and of magnesium (reckoned as MgO) contained per 100 grams of substance dried *in vacuo* at the different times: 1) in the part of the leaf substance dissolved in the ether and alcohol (*organic* phosphorus and magnesium); 2) in the part not dissolved (*residual* phosphorus and magnesium).

From the table giving these figures, and also the relations between organic phosphorus and residual phosphorus on the one hand and organic

magnesium and residual magnesium on the other, it is found that the absolute weight of organic magnesium increases from April to May in chestnut and lilac leaves. The maximum is reached on the 4th May in the former case, and on the 3rd in the latter. Beyond those dates this weight decreases almost regularly. With regard to the leaves of the chestnut tree the maximum weight of magnesium is reached on the 26th April. Taking on the other hand the ratio between the weights of organic and those of residual magnesium, this ratio is found to reach its maximum on the 26th May in the leaves of the horse-chestnut, on the 3rd May in those of the lilac, and not until the 14th June in those of the common chestnut. Assuming that the time when this ratio reaches its maximum corresponds, at any rate in the year under consideration, to the maximum activity of assimilation, it must be concluded that this process is most active during the whole of May in the horse-chestnut, at the beginning of May in the lilac, and between the end of May and the middle of June in the ordinary chestnut. On the other hand, on comparing the $\frac{\text{organic phosphorus}}{\text{residual phosphorus}}$ and $\frac{\text{organic magnesium}}{\text{residual magnesium}}$ a satisfactory agreement between the maxima of these two ratios is found in the horse-chestnut leaves. Although this agreement is less marked in the other two species of leaves studied, it is reasonable to assume that the maximum of vegetative activity is at the same time manifested by the elaboration of carbohydrates and the concurrent production of the organo-phosphoric compounds the existence of which is unquestionably bound up with the chlorophyll synthesis.

These experiments should be resumed subsequently on other plant species.

746 – **Comparative Tests of 4 Varieties of Barley at Torestorp, Sweden.** — HJALMAR VON FEILITZEN, in *Svenska Mosskulturförenings Tidskrift* XXXth Year; No. 1, pp. 57-60, Jönköping, 1916. PLANT BREEDING

Tests covering a period of 6 years (1909 to 1914) at the Station of Torestorp. Manure: superphosphate, 178 lb per acre (in the last years 267 lb.), potash salts of 37 % strength 178 (267) lb. per acre. The varieties tested were always sown at the same time, the time of sowing varying from the 7th to the 15th May in different years. The crops were more or less damaged by spring frosts. This was the case in 1909 and 1913. In 1910 the 6-rowed barley, an early variety, was the only one to suffer from the low temperatures.

As appears from the Table, the annual fluctuations of yield are very great. The best results were in 1911. In that year the "Svanhals" variety gave a yield of about 23 cwt. per acre. The same was the case in 1914, in which year the 6-rowed barley furnished a yield of about 23 ¼ cwt. per acre. The worst years were 1909 and 1913, with yields of 31 cwt. and 24 cwt., owing to the spring frosts which in those regions form the most frequent weather feature, and the one which does most injury to the cereal in question.

As regards the yield of grain, the "Plymage" variety furnishes the

## *Results of Tests.*

| Varieties | 1909 | 1910 | 1911 | 1912 | 1913 | 1914 | Averages |
|---|---|---|---|---|---|---|---|
| | | | | | | | |
| *Straw yields (cwts per acre).* | | | | | | | |
| Plymage | 38 1/4 | 41 1/10 | 41 3/5 | 47 1/5 | 60 1/2 | 40 1/2 | 44 4/5 |
| Primus | 42 | 42 | 45 4/5 | 41 | 55 4/5 | 38 1/2 | 44 1/3 |
| Svanhals | 36 1/8 | 41 | 42 3/5 | 46 9/10 | 52 | 39 | 43 |
| Sexradigt | 37 | 41 3/4 | 34 | 36 | 45 1/3 | 36 3/4 | 38 4/5 |
| Averages | 38 1/2 | 41 3/10 | 40 4/5 | 42 7/10 | 53 1/3 | 38 1/2 | 42 |
| *Grain yields (lbs per acre).* | | | | | | | |
| Plymage | 1 576.41 | 2 126 | 2 440 | 2 392 | 939 1/2 | 2 176 | 1 940 |
| Primus | 1 440 | 2 044 | 2 344 | 1 906 1/2 | 829 | 1 510 | 1 679 |
| Svanhals | 1 290 | 2 136 | 2 580 | 2 302 1/2 | 990 | 2 052 | 1 879 |
| Sexradigt. | 1 429 | 996 | 2 373 | 1 980 1/2 | 1 583 1/2 | 2 625 1/2 | 1 846 |
| Averages | 1 411.38 | 1 825 1/2 | 2 432 | 2 145 | 1 083 | 2 091 | 1 836 |
| *Weight of 1000 grains in grams.* | | | | | | | |
| Plymage | 38.8 g | 41.6 g | 42.7 g | 46.6 g | 30.7 g | 46.1 g | 41.1 g |
| Primus | 40.4 | 43.1 | 42.2 | 51.5 | 35.9 | 50.8 | 44.0 |
| Svanhals | 39.6 | 42.6 | 43.8 | 45.4 | 34.8 | 47.2 | 42.2 |
| Sexradigt. | 30.0 | 31.2 | 36.3 | 37.3 | 25.6 | 37.0 | 32.9 |
| Averages | 37.2 g | 39.7 g | 41.3 g | 45.2 g | 31.7 g | 45.3 g | 40.0 g |
| *Weight per bushel in lbs.* | | | | | | | |
| Plymage | 41.60 | 50 | 54.51 | 52.27 | 36.32 | 52.75 | 48.90 |
| Primus | 46.18 | 51.55 | 53.07 | 52.91 | 40.80 | 52.27 | 49.46 |
| Svanhals | 45 | 49.03 | 52.75 | 50.11 | 38.08 | 54.03 | 47.78 |
| Sexradigt. | 43.39 | 42.49 | 55.32 | 53.39 | 36.24 | 52.75 | 47.39 |
| Averages | 44.02 | 48.42 | 53.9 | 52.19 | 40.43 | 52.95 | 48.38 |
| *Length of period of vegetation (days).* | | | | | | | |
| Plymage | 111 | 112 | 95 | 109 | 108 | 94 | 105 |
| Primus | 111 | 112 | 95 | 109 | 108 | 94 | 105 |
| Svanhals | 111 | 112 | 95 | 99 | 108 | 89 | 102 |
| Sexradigt. | 102 | 112 | 93 | 99 | 104 | 89 | 100 |
| Averages | 109 | 112 | 94 | 104 | 107 | 91 | 103 |

best crops on the average, while the " Primus " variety is found inferior to all the others tested. On the other hand, as regards straw yield and weight per bushel the varieties " Plymage " and " Primus " are equal, and markedly superior to the two others. " Primus " gives the biggest weight per 1 000 grains (44.0 grms.), and is followed by " Svanshals ", " Plymage " and " Sexradigt " with 32 grms. only.

Finally, the duration of the vegetative period varied from 91 days in 1914 to 112 days in 1910. The 6-rowed barley is harvested on the average, 5 days, and " Svanhals " 3 days before " Plymage " and " Primus ", which are last, and ripen simultaneously. From the results of these 6 years' tests as a whole, it may be concluded that the two varieties " Plymage " and " Svanhals " in the region of Torestorp and in all other localities with equal climatic and soil conditions, should be preferred to the varieties " Sexradigt " and " Primus ", in spite of the excellent quality of grain marking this latter variety.

747 – **Comparative Tests with 8 Races of Oats, at Flahult, Sweden.** — HJALMAR von FEILITZEN in Svenska Mosskulturforeningens Tidskrift. Year XXX, No. 1, pp. 65-67. Jönkoping, 1916.

Comparative cultivation experiments with 8 races of white and black oats conducted in 1915 at Flahult in sandy and peaty soil.

The oats were sown on the 29th April. The frosts at the end of May and lack of rain at the time of earing, caused great damage to the sown fields and reduced the crop considerably.

Among the white races in particular, there was a high percentage of ears which were empty, or poor or inferior in quality of contents. We reproduce some corresponding data : (Table I, page 968).

Owing to the unfavourable weather, both the straw and grain yields were low. The best comparative results were obtained with the two strains of German oats for peat soil, and the worst with Klock II. The two new types of Svalof black oats were, contrary to expectation, inferior to the German oats ; the shortness of the period of observation, however, does not allow of definitive conclusions on this point. We quote the following average results :

| | Number of years of test | Straw yield per acre | Grain yield per acre |
|---|---|---|---|
| *White* | — | cwt. | lbs |
| Probsteier | 7 | 38.36 | 2 068 |
| New German light yellow oats for peat soil | 5 | 38.32 | 2 037 |
| New German golden-yellow oats for peat soil | 5 | 38.42 | 1 800 |
| *Black* | | | |
| Black German oats for peat soil | 7 | 34.79 | 2 488 |
| Klock II | 5 | 41.27 | 2 408 |
| Black Nordfinsk oats | 5 | 37.82 | 2 171 |

Among the black races examined at Flahult, the German oats lead, proving superior to the Klock, which is nevertheless remarkable for its abundance of straw. The Nordfinsk always gave unsatisfactory results and is certainly not able to compete with the other races. With regard to the

TABLE I.

| | Straw cwt per acre | Grain lbs per acre | Bad Grain lbs. % | Qualities of grain: Weight of bushel in lbs. | Weight of 1 000 grains in grams | Percentage weight of kernel % | Days between sowing and earing | Length of entire vegetative period in days |
|---|---|---|---|---|---|---|---|---|
| *White:* | | | | | | | | |
| New German light yellow oats for peat soil . . . . | 30.57 | 1 063 | 8.8 | 36.06 | 28.8 | 68.9 | 68 | 106 |
| *do.* golden-yellow . . . . | 34.27 | 1 471 | 11.4 | 37.76 | 26.0 | 68.2 | 68 | 106 |
| Probsteier . . . . . | 34.50 | 1 385 | 16.1 | 36.96 | 29.2 | 67.7 | 78 | 43 |
| *Black:* | | | | | | | | |
| Black German oats for peat soil . . . . . | 22.93 | 1 721 | 3.6 | 37.12 | 30.0 | 72.6 | 68 | 101 |
| Black Svalöf oats No. 01120 | 31.90 | 1 431 | 8.4 | 37.28 | 27.8 | 73.3 | 69 | 106 |
| Black Svalöf oats No. 01101 | 26.36 | 1 373 | 7.8 | 36.24 | 30.8 | 70.3 | 69 | 104 |
| Black Nordfinsk Oats . . . | 28.05 | 1 239 | 7.4 | 37.44 | 27.1 | 71.7 | 68 | 104 |
| Klock II. . . . . | 33 | 1 070 | 19.6 | 34.79 | 28.7 | 67.9 | 76 | 110 |

white oats, the Probsteier is somewhat superior to the two German types, but the latter nevertheless represent very good varieties particularly adapted to peat soils

748 - **Strawberry Breeding in the United States.** — *The Journal of Heredity*, Vol. VII, No. 4, p. 191. Washington, April 1916.

Probably with no single fruit has more been accomplished by scientific breeding than with the strawberry. Of the 200 000 acres or thereabouts which are planted to strawberries in the United States, it is probable that 90 % are planted to varieties which have been produced during the last quarter of a century.

Strawberries have been grown in the United States ever since the country was first settled, but the original strains bore fruit only in the early summer. One of the greatest advances in the industry was the introduction of the fall-bearing or ever-bearing varieties, the first of which was Pan-American, produced by SAMUEL COOPER, of Delevan, N. Y., in 1898. This was a sport from the variety Bismarck, which bore only in the early summer. Mr. COOPER produced a number of seedlings by self-fertilization from this sport and then crossed them with each other and back on the parent. In this way a number of other more desirable varieties were obtained. Crossing Pan-American with Dunlap (Senator Dunlap), a widespread and famous variety, HARLOW ROCKHILL, of Conrad, Iowa, produced in 1908 the variety Progressive, which has proved one of the most popular in the northern States.

Dunlap itself which has long been the most widely grown northern variety, originated with Rev. J. R. REASONER, of Urban, Ill. in 1890, but was not introduced to the trade until 1900. It was the result of definite breeding.

The variety Klondike, which makes up probably nine-tenths of the area planted in the southern States, was produced as long ago as 1895 by ROBERT CLOUD of Louisiana, as a result of a carefully planned cross.

The ease with which results are got appears to be the principal reason why plant breeding has been so much more widespread with the strawberry than with any other fruit. Crosses are easily made, seedlings are easily grown, and they multiply so rapidly by runners that a large stock can be obtained in a very short time.

749 – **Sowing and Transplanting Rice on the "Dapog" Method, peculiar to some parts of the Philippines.** — APOSTOL SILVERIO, in *The Philippine Agricultural Review*, Vol. VIII, No. 2, pp. 98-102. Manila, 1915. CEREALS AND PULSE CROPS

The practice of growing 2 rice crops per year is of old standing in those parts of the Philippines where sufficient water for irrigation is always available. As soon as the first crop is taken off, the land is prepared for the second. The earliest irrigated rices are used, with the twofold object of cropping before the rainy season has fully set in, and allowing the necessary time for tillage for the main crop. Direct broadcast sowing (by hand) is the only one used for the second crop wherever it is grown in the Philippines (provinces of Tarlac, Pampagna and Laguna), except in the communes of Calanan and a small part of that of Bay (Laguna), where the special method of sowing and transplanting called "dapog" is in use. This method allows the plantlets to be transplanted without breaking them, at a younger age than with ordinary seedlings. Earliness is of prime importance for the dry season crop. It is therefore necessary to transplant *young* plants, their age having a direct influence on the period of ripening of the rice. The crop ripens later in proportion as the age of the transplanted plants is more advanced. A difference of 23 days even has been found in the time of ripening between rice transplanted on the "dapog" method and that transplanted on the ordinary method.

For the "dapog" method the seedling plot requires neither special soil nor special tillage. It is tilled with the rest of the rice field. It must, however, lie near the water channel, so that the water should have no time to get hot, during the hours of great heat, and scald or otherwise injure the germinating seeds.

Sowing on the "dapog" method requires 1.3 to 2.6 gallons of seed more per acre than on the ordinary method. The seed, put into a coarse canvas bag, is immersed in water (preferably slow moving water) for 24 to 36 hours, then spread out in the shade. 36 hours later, or when at least 75 % of the grains show signs of germination, the seed is put down in a seed plot prepared as follows :

The seed plot area, after irrigation, drying, ploughing and harrowing, is harrowed again on the day of sowing. When the soil is levelled and the silt settled, the water is run off, the soil is covered with whole banana

leaves, cut along the midrib, and placed so that the latter forms a borderr right round. Care must be taken to fill all vacant spaces with leaves with their midrib excised. It is still better to build up with two or three layers of leaves a bed of a width of about a yard and a length nearly equal to that of the ricefield dyke. On the leaves a layer of 2 to 2 ½ cms. of rice husk or finely chopped rice straw is placed, and on it the germinated rice is sown very closely. 16 ½ gallons of seed suffice for sowing 2 beds 16 yds. in length by 3 ft 3ins. in width each.

The afternoon is preferable for sowing, and it is advisable to strew carefully over the seed the mud lying around the seed plot. It is generally necessary to protect the plot against excessive heat by placing at a height of 11 to 16 inches above it light shelters made up of banana leaves spread over a bamboo and board framework. During the first few days after sowing the plot is watered several times a day. In the work of the writer the use of ordinary garden watering cans was found very practical. Later on, when the seedlings are no longer liable to be carried away by the water, they should be irrigated with slow running water until the time of transplanting, because stagnant water might, during a day of great heat, seriously injure the young plants. Care will be taken of course not to submerge them, and never to leave them dry. The roots, being unable to pass through the banana leaves, grow laterally rather than vertically, and interlace with each other, forming a carpet easily separated from the sort of matting placed below. At transplanting, the interlaced roots are cut into strips of a length such as can be kept spread over the arms and shoulders, or both the young plant roots and the banana-leaf matting are cut into strips. They are rolled up slowly with the banana-leaf outside and unrolled on reaching the field.

Here the root matting is cut up into fragments of about the size of a small plate, which are distributed over the rice field at regular intervals, as is done with the small bundles of young plants in the ordinary method of transplanting. In carrying out their work the transplanters hold the fragment of root matting in their left hand, keeping it spread over the palm by means of the thumb of the same hand. With the first 3 fingers of the right hand, they detach a tuft of several plants and plant it in the mud. The young plants are ready for transplanting 10 to 14 days after sowing. Experience proved to the writer that if the plants are healthy and transplanting is skilfully done, 3 or 4 per bundle, at the ordinary distance of 4 or 6 in. square, are sufficient to ensure regular growth and a maximum crop, under ordinary conditions. Generally, however, transplanting is done much more densely. The young plants, if transplanted more than 11 days after sowing, are greatly weakened and many die. If they have grown with exceptional vigour, they must be topped before transplanting. The seed plot is planted like the rest of the field after taking away or turning in the banana leaves. The rice-field is harrowed and covered with silt for the last time on the day of transplanting or partly the day before.

By the "dapog" method the yield obtained is higher than by direct sowing. Under labour conditions in the Philippines the value of the sur-

plus exceeds the increased cost of production due to transplanting. The "dapog" method is thus making its way into localities where it was quite unknown even lately. It is applicable not only to the second crop rice, but also to the regular crop of early irrigated rice.

750 – **Early Weeding of Rice Fields.** — NOVELLI N., in *Giornale di Agricoltura della Domenica*, Year XXVI, No. 19, p. 154. Piacenza, May, 7, 1916.

In cases of shortage of labour at the time when rice fields are usually weeded it is advised that this should be done with all available labour as early as possible *i. e.* directly the rice has germinated. Early cleaning is of special advantage in new rice fields, particularly cleared meadow land. In these rice fields various meadow plants continue to grow long after flooding. The practice is also of advantage in old rice fields which, shortly after flooding, are overrun by the weeds called "erba grossa" (*Ranunculaceae, Alisma Plantago, Glyceria fluitans, Cyperus* spp., etc.). Early cleaning will destroy these different weeds more readily and effectively, so that the next time it is done there will be nothing to remove but *Panicum Crusgalli* and reeds (*Cyperus* spp.). The treading down of the recently ploughed soil during the cutting back is rather advantageous than injurious through the ensuing consolidation of the soil.

Early weeding has been adopted for several years by the brothers SANCIO, who have found that it promotes and improves the growth of the rice while reducing the total cost of the work of cleaning.

751 – **Experiments in Manuring Rice with Burnt Paddy Husk, in Burmah.** — THOMPSTONE E. and SAWYER A. M., in Department of Agriculture, Burma, Report of the Mandalay Agricultural Station for the year 1914-1915, pp. 10-12. Rangoon, 1916.

The rice field used for these trials was divided into 4 plots, 2 being test or control plots, while the other 2 were, for 5 years running, manured with burnt rice husk in the proportion of 12 000 lbs. per acre, which manuring was afterwards stopped. The appended Table sums up the results during the 7 years 1908-1909 to 1914-1915.

*Results of Manuring Rice with Burnt Husk, in lbs per acre. (average of 2 plots).*

| Plots | Crop 1908-09 | Crop 1909-10 | Crop 1910-11 | Crop 1911-12 | Crop 1912-13 | Crop 1913-14 | Crop 1914-15 | 7 years average |
|---|---|---|---|---|---|---|---|---|
| *Manured :* | | | | | | | | |
| Grain. . . | 676 | 1 746 | 1 321 | 1 620.5 | 2 300 | 1 856 | 1 758.5 | 1 611.2 |
| Straw. . . | 2 300 | 1 998 | 1 348 | 1 719 | 2 603 | 2 345 | 925 | 1 801.1 |
| *Unmanured :* | | | | | | | | |
| Grain. . . | 950 | 2 005 | 1 412 | 1 112 | 1 386.5 | 1 771.5 | 1 273 | 1 339.1 |
| Straw. . . | 2 562 | 3 500 | 1 715 | 1 533 | 1 429 | 1 141 | 805 | 1 822 |

In the first year of dressing with burnt husk there was a falling off in the yield, probably due to the fact that the late application had not allowed the burnt husk to mix thoroughly with the soil. In the second year there was an improvement. In the third, fourth and fifth years a yield of 30,50 and 64 % above that of the control plots was obtained respectively. Even allowing for experimental errors, there is still sufficient margin to demonstrate the beneficial effect of the dressing with burnt husk, which was due probably to the physical improvement of the soil, which was of a clayey nature, compact and impermeable. The after-effect of this dressing during the 2 years (1913-1914 and 1914-1915) when it was suspended was manifested by an excess yield of 58 % and 38 % respectively; this decline, however seems to suggest that the effect produced tends gradually to disappear.

The experiment will be continued.

FORAGE CROPS, MEADOWS AND PASTURES

752 – **Accumulated Fertility in Grass-land in Consequence of Phosphatic Manuring.** — SOMERVILLE W. (Professor of Rural Economy in the University of Oxford), in *The Journal of the Board of Agriculture*, Vol. XXII, No. 12, pp. 1201-1209. London, March 1916.

This new contribution of the writer to the manuring question brings out clearly the importance of the accumulated fertility resulting from continued dressing of permanent grass-land with slag. The greater production of meat, milk and stable manure obtained by means of these fertilisers in consequence of the increase in forage production only represents a part of the benefit provided by such fertilisation, because, side by side with the greater production of forage, an increased fertility is observed in the soil which is probably proportional to the increased production, and is a beneficial effect of manuring grass-land with slag which has hitherto not been sufficiently appreciated.

The experiments carried out show that this accumulation of fertility is in proportion to the quantity of slag applied, the period during which the fertiliser exerted its action and the response of the soil to such fertiliser.

As a result of the use of this accumulated fertility there were obtained at Cockle Park, in 1914-1915, 70 per cent increases in wheat crops, and the 5th mustard crop (1915) showed no sign of exhaustion of this fertility. At Denton Hill and Arncot, where the grass land had been dressed with less slag and for a shorter time, the increased production due to the accumulated fertility was less notable; nevertheless it averaged 27 per cent for the 5 lands considered.

In view of the possibility of a larger extension of the tillage area in England, the writer points to the importance of this excellent slag manure for natural grass land, as the farmers who have abundantly manured their grass lands will be the first to benefit by this stored up fertility. As regards superphosphate the Author is of opinion that even if it could do no more than accomplish a 10 per cent increase in 2 tillage crops, this would be sufficient in many cases to pay the original cost of the treatment.

753 – **Chemical Determination of the Fibre Yield of Flax for the Purpose of Studying the Influence of Different Cultivation Factors on such Yield.** — LINNIK, JA., in *Сельское Хозяйство и Лѣсоводство* (Agriculture and Sylviculture), pp. 224-246. Petrograd, February 1916. FIBRE CROPS

The writer, after reviewing the different methods of steeping flax, describes the chemical method devised by him in the laboratory of technological chemistry for textiles in the Technological Institute of Petrograd. He considers it preferable to all others, as it enables the investigation of the yield of fibre to be conducted under perfectly equal conditions dependent only on the will of the investigator. In other words this method affords the possibility of obtaining comparative data for studying the influence of the different factors, for instance, manuring, on the fibre yield.

The method consists in treating the flax stalks with solutions of sulphuric acid and alkalies in an apparatus specially designed for experiments in the treatment of textile materials with chemical reagents. This treatment is carried out in a special boiler fitted with a feed heater and a centrifugal pump ensuring continuous circulation of the liquid. After careful washing in water, the wet stalks are put through the press and afterwards dried in a current of air heated to a temperature not exceeding 40° C.; they are kept for three days in this environment with constant humidity and temperature after which they are broken and combed. The flax stalks were chosen in three different places and three different groups of them were formed. The results of the analysis, with reference to the percentages of weight lost by the stalks after the chemical treatment, and the percentage of fibre yield, are as follows:

| Manure | Percentage of loss by weight of the flax stalks | | | Average percentage of loss by weight | Number of plots | Percentage of yeld in textile fibre | | | Average percentage of yield in textile fibre |
|---|---|---|---|---|---|---|---|---|---|
| | 1st group | 2nd group | 3rd group | | | 1st group | 2nd group | 3rd group | |
| Nil | 15.19 | 15.57 | 16.47 | 15.75 | 11 | 41.6 | 32.8 | 38.9 | 37.8 |
| Nitrogen | — | 13.71 | 16.31 | 15.01 | 2 | — | 35.5 | 37.5 | 36.5 |
| Potash | — | 17.12 | 17.21 | 17.17 | 2 | — | 32.4 | 35.5 | 33.9 |
| Phosphoric Acid | — | 18.52 | 16.71 | 17.62 | 2 | — | 30.0 | 36.6 | 33.3 |
| Nitrogen and phosph. acid | 17.04 | 13.89 | 15.92 | 15.62 | 3 | 39.5 | 39.0 | 35.6 | 38,0 |
| Nitrogen and phosph. acid | 16.10 | 15.35 | 17.39 | 16.61 | 3 | 41.3 | 34.6 | 36.9 | 37.6 |
| Potash and phosphor. acid | 17.27 | 16.13 | 16.14 | 16.51 | 3 | 37.1 | 33.9 | 34.9 | 35.3 |
| Nitr., potash and phos. acid | 14.38 | 17.21 | 17.47 | 16.35 | 3 | 41.1 | 31.2 | 34.9 | 35.7 |

On comparing the data in respect of loss of weight of the stalks with those of the average fibre yield, and allowing for the quality of the soil, which exerts great influence on the chemical composition of the flax stalks, the necessary guidance for selection of this plant may be obtained. The experiments carried out, however, are in the author's view only first trials,

and the chemical laboratory method of treatment of textile plants should be studied in fuller detail, being capable of a wider application and promising important economic results.

754 - **Piassava Industry of British West Africa.** — *Bulletin of the Imperial Institute*, Vol. XIII, No. 4, pp. 555-556. London, October-December 1915.

West African Piassava is a brushmaking fibre obtained from the leaf-sheaths of the wine-palm (*Raphia vinifera*). It is produced in most of the British West African possessions, but chiefly in Sierra Leone.

The exports of piassava from Sierra Leone in 1914 were 983 tons, value £ 19 492, as compared with 839 tons, value £ 12 280 in 1913. The exports from Nigeria were 403 tons, value £ 5 117 in 1914, as compared with 228 tons, value £ 2 806 in 1913. No exports of the fibre from Gambia or the Gold Coast have been recorded in recent years. The piassava industry in the Gambia appears to be worthy of attention with a view to development. The palm grows on the banks of the river, which is navigated by ocean-going-vessels.

In the course of preparing piassava in Sierra Leone, a fibrous by-product is obtained which hitherto has not been utilised. In order to ascertain whether this material has any commercial value, a sample was forwarded recently to the Imperial Institute for examination.

It consisted of a matted mass of reddish-brown fibre, resembling coir in appearance. The material was fairly clean, the fibres were very irregular in size, strength and length; this latter varied from 1 to 3 ft., but was mostly from about 20 to 30 in. The fibre contained 9 per cent moisture; 3.4 per cent ash; 65.8 per cent cellulose. The material would be accepted on the market as a substitute for low-grade coir, and would realise about £ 6 to £ 8 per ton in London, if shipped in good dry condition in press-packed bales (March 1915).

CROPS YIELDING OILS, DYES AND TANNINS

755 - **Influence of Green Manure on the Germination of Oil Seeds.** — See No. 734 of this *Bulletin*.

756 - **Investigations in Reference to Henna.** — CORTESI F. and TOMMASI G., in *Annali della R. Stazione Chimico-Agraria Sperimentale di Roma*, Series II, Vol. VIII, pp. 75-113 Rome, 1916.

This short monograph sums up the results of botanical and chemical investigations with a view to determining the methods of cultivation, uses, adulteration and market conditions of this plant, which is of considerable economic importance for Tripoli.

I. — BOTANICAL INVESTIGATIONS. — The data and description of the plant prompt CORTESI to adopt the name of *Lawsonia inermis* L. in the wider sense rather than that of *Lawsonia alba* Lam. contained in the INDEX KEWENSIS, because it was LINNE who named the *Lawsonia* genus and although the difference between *inermis* and *spinosa* corresponds to two epochs in the age of the plant, the specific name of *L. inermis* should be kept (as KOEHNE also thinks) on grounds of priority The plant, which is cultivated in all tropical regions, may reach a height of 23 feet. The obovate or oblong or widely lanceolate leaves are 12-67 mm in length and 5-27 mm in width.

The colour of the flowers, white in the *alba* variety, is pale sulphur and also variegated in the *miniata* variety. The leaves are the most important part used and a careful description is given, together with a series of measurements. The commercial product is formed by the dried leaves, which are rarely whole, and are greyish green or yellowish brown in colour according to the age of the product. Impurities are often mixed with these leaves, such as pieces of branches and fruits, and débris of other plants, which must be regarded as added for fraudulent purposes when found in considerable quantities.

Henna has been used from the most remote times as a dye plant by the Eastern peoples : the Arabs use it as an excellent cosmetic for different purposes and also as a medicinal plant. Its dyeing qualities are widely utilised for wool, silk and wood, and in Europe it is also esteemed as the only really harmless vegetable dye. From an analysis of several samples coming from Tripoli, the writer found that the most usual frauds and adulterations consist in the addition of fragments of fig, pomegranate, olive, palm and other leaves or wood, thoroughly ground and mixed to the powdered product.

The cultivation of henna is very extensive in the fields of Tripoli and is always irrigated. The plantlets are raised in nurseries and transplanted in the spring, being planted in parallel rows at a distance of 50 × 50 cm. No manure is applied. Irrigation is carried out every 6 days. The plantation is hoed in the spring and sometimes again in the autumn, and some weeding is done. The crop lasts about 12 years, the maximum growth being reached in the second or third year. The crop is usually taken off in February and August or September, the whole of the above-ground part of the plant being cut. The annual yield of dried leaves varies from 15 to 19 cwt per acre.

II. — Chemical Investigations. — According to Tommasi henna is one of the few plants which have escaped the vigilance of plant chemists. The appended table gives the results of direct analyses and other additional determinations :

*Results of Henna Analyses.*

| Determinations | Leaves | Branches |
|---|---|---|
| | per cent. | per cent. |
| Moisture at 100°-105° C. | 10.67 | 11.10 |
| Fat (ether extract) | 6.04 | 0.60 |
| Crude fibre | 10.51 | 22.92 |
| Nitrogenous substances | 13.25 | 6.25 |
| Ash | 8.64 | 3.28 |
| Non-nitrogenous extract (calculated) | 50.89 | 55.55 |
| | 100.00 | 100.00 |
| Reducing sugars | 14.04 | 0.14 |
| Hydrolisable sugars | 14.25 | 0.30 |
| Pentosans | 7.17 | 11.72 |
| Tannin (cortex) | 0.72 | 2.95 |
| Soluble substances (extract) | 36.39 | 15.70 |
| Ash | 3.80 | - |
| Substances soluble in acetone | 18.73 | - |
| Substances soluble in absolute alcohol | 33.74 | - |

The tests of the watery extract of the plant proved that the tannic substances contribute very much to imparting the different shades to wools, mordanted or not with metallic salts, and dyed with the extract of the branches or leaves. Dye tests made with cotton, wool and silk are dealt with in a table where it is shown that the results with cotton are insignificant, while with wool and silk the pigment is fixed even without mordant. The writer extracted the pigment from the leaves in the form of fine tufts of orange-yellow needles in a quantity of 2 grams per kilogram of dried henna; this pigment behaves like an acid dyestuff.

STIMULANT, AROMATIC, NARCOTIC AND MEDICINAL CROPS

757 – **Production of Medicinal Plants in Italy.** — CORTESI FABRIZIO in *Natura, Rivista di Scienze naturali*, Vol VII, pp. 1-34. Milan, January-April 1916.

General considerations on the conditions of the growing of and trade in medicinal plants in Italy, followed by: 1) a list of medicinal plants (78) found wild in the Italian flora, and a synoptic table of their geographical distribution in Italy; 2) a list of the average prices quoted on the principal Italian markets for the chief medicinal drugs before and during the European war; 3) a table of Italian imports and exports of the principal medicinal drugs during the years 1912 to 1914.

The Italian flora is very rich in wild medicinal plants, but the trade in these is far from being as considerable as it should be, $^{9}/_{10}$ of it being in the hands of ignorant herbalists. Italy produces and exports (whole or in parts) the following medicinal plants:

Absinthe, aconite, adonis, agaric, almond, angelica, common aniseed, arnica, burdock, belladonna, borage, field camomile, Roman camomile, maidenhair, centaury, chicory, couch-grass, hemlock, colchicum, cumin, digitalis, hellebore, eucalyptus, eupatory, male fern, fennel, gentian, pomegranate, juniper, germander (officinal), hops, hyssop, iris, master-wort (root), henbane, laurel, cherry-laurel (leaves), lavender, lichen, flax (seed) mallow, woody nightshade, lily of the valley, manna, bugleweed, melissa (balm), mustard (seed), mint, perforated St. John's-wort, myrtle, walnut (leaves), poppy (heads), herb patience, parietary, dandelion, plantain, phellandrium, pulicaria (seeds), bear-berry, liquorice, castor oil plant, rosemary, sweet-rush, soapwort, sage, squill, spurred rye, stavesacre, thorn-apple, elder, lime tree, thyme, marsh clover, saffron, coltsfoot, valerian, violet.

Some of these plants, such as mallow, field camomile, castor oil, etc., although partly exported also need to be imported, the production being insufficient to meet the demands of national industry.

In Italy, the production of essential oils is at present confined to Sicily and Calabria, with regard to citrus oils, and to Piedmont for peppermint oils. In 1914 Italy exported: essential oils of citrus fruits, 74 558 cwt of a value of £ 484 326 (as against 92 776 cwt value £ 603 822 in 1913); spirit of peppermint: 23 521 cwt value £ 23422 (as against 43 885 cwt value £ 43 698 in 1913). The Italian spirit of peppermint is of absolute purity.

Trials of aloes cultivation (*Aloe vulgaris* Lamk.) have been undertaken in Sicily, and a juice fairly rich in active principles appears to have been obtained from the leaves. Sicily possesses almost a monopoly of the pro-

duction of manna (1), which it exports to all parts of the world. Tuscany and the province of Verona produce the best qualities of iris (*Iris florentina* L., *I. germanica* L., and *I. pallida* Lamk.). Some time ago, *i. e.* before the appearance on the market of Russian liquorice (probably *Glycyrrhiza uralensis* Fisch.) and liquorice juice prepared in a factory near Tiflis, the most important liquorice-growing countries (*G. glabra* L. and *G. echinata* L.) were Italy and Spain. The Italian liquorice plant is chiefly used for the extraction of the liquorice juice, which is exported throughout the world.

Many plants rich in alkaloids and glucosides find suitable conditions for their growth in Italy; these are principally belladonna, henbane, stramonium aconite and digitalis. The Italian belladonna, especially that of the Abruzzi, is excellent, but its production is not sufficient for home consumption; the same applies to henbane and stramonium. In Brianza, at Brunate, Civiglio and their environs (province of Como), there are fields where digitalis is chiefly grown for pharmaceutical purposes. In Sardinia, chiefly in the forests of Ortobene, beyond Nuoro (province of Sassari), large quantities are found wild, but are rarely harvested. Cultivation of the opium poppy (*Papaver somniferum* L. var. *album*) has long been carried on successfully in Sicily. The castor oil plant is extensively grown in Italy, especially in Venetia, but a considerable quantity of seeds of this plant is imported. In 1914 such imports amounted to 191 127 cwt worth £120 401 (as against 217 581 cwt worth £139 192 in 1913). The exportation of castor oil was 4954 cwt worth £12 949 in 1914 (against 10 442 cwt worth £19 520 in 1913).

As regards saffron (*Crocus sativus* L.), Italy exports it to the value of about £8 000 per year, but imports from Spain 80 to 90 cwt per year of a value of about £20 000. The competition of Spanish saffron with that of Aquila was greatly assisted by the standard packing in small sacks of 4.4 lbs. leadsealed and guaranteed, which contain the pure stigmas.

Finally, the Author advises that in addition to trials of aloes and opium poppy cultivation in Italy, the growing of Spanish camomile, hydrastis and camphor should be begun.

758 – **Bridge Grafting of Fruit Trees.** — FLETCHER W. F., in *U. S. Department of Agriculture, Farmers' Bulletin* No. 710, 8 pp., 7 fig. Washington D. C., February 21, 1916. FRUIT GROWING

For the treatment of trees that have been girdled round the base of the trunk by injuries due to quadrupeds, parasitic insects, or mechanical agents, the writer advices "bridge grafting", made by using scions or small limbs to connect the two portions of the bark of a stock which have been separated by injury, the ends of the scions uniting with the uninjured parts above and below the wounds. The accompanying illustrations indicate the way in which the combinations of these scions form bridges of bark over the previously exposed part of the wood, the plant consequently continuing a healthy life.

When the girdle of bark removed from the trunk is too wide to permit of the above grafting, young plants of the same species are transplanted

(1) See *B.* June 1915, No. 612. (*Ed.*)

round the base of the tree. All their branches are cut away and the top of their trunk is grafted into the trunk of the tree below the upper edge of the wound. The old tree is thus provided with a new root system which enables it to survive.

759 – **The Fruiting of Trees in Consecutive Seasons.** — DUKE OF BEDFORD and PICKERING S. U. *Fifteenth Report of the Woburn Experimental Fruit Farm*, pp. 1-19. London, 1916.

The view that fruit trees tend to bear heavily and lightly in alternate seasons is often made the basis of a recommendation to thin a heavy crop borne one year, in order to obtain a better crop the succeeding year. It appears, however, that the tendency towards alternate cropping, as it may be called, is very feeble, and that there is at the same time an equally potent tendency towards consecutive cropping, that is, that a tree bearing particularly well or badly during one season, will probably do the same in the succeeding season, whilst the chief factor in determining good or poor bearing is undoubtedly the atmospheric conditions, and not any innate tendency of the individual tree to either alternate or consecutive fruiting. The existence of a tendency towards alternate bearing is indicated by the fact that young trees, if prevented for four years from bearing after they have come to the age for so doing, will bear exceptionally heavy crops as soon as they are allowed to bear. But it was only in one series of experiments on some 300 young apple and pear trees during the seasons 1899 to 1903, that such a tendency was actually recognised. Observations on the same trees, made when they were younger, during 1894 to 1897, showed that their tendency then was towards consecutive bearing, and in another case of apple trees where the observations apply to over 5 700 instances, extending from 1904 to 1915, the tendency has been, with only one slight exception, towards consecutive bearing But this tendency affects the results to only a slight extent, about 12 per cent, the remaining 88 per cent being attributable to peculiarities of the season, and not to the individual behaviour of the trees. It is noticeable that the preponderating influence of external conditions becomes more marked as the tree is left more to its natural habits, *i. e.*, as it is less pruned, and, also, as the age of the tree increases ; and it is more marked in the case of trees on the paradise stock than in these on the crab stock, this being doubtless a consequence of the latter coming less rapidly to full maturity than the former.

If, in a plantation consisting of a large number of individual trees, whether of the same or of different varieties, it is found that good and bad fruiting seasons alternate with each other, it is evident that such alternation must be caused by some conditions affecting all the trees alike and not to any tendency to alternate bearing exhibited by the individual trees ; for such a tendency, if it existed, would be exhibited by different trees in different seasons, and the effect of it would be to bring about uniform production in the plantation as a whole. The alternation of good and bad years has been uniformly exhibited to a most marked extent in some plantations available for observation over a period of 20 years. As the

injury to these crops has nearly always been due to spring frosts, it is evident that the alternation of good and bad years is due to the tendency of such frosts to occur alternately in consecutive seasons.

760 – **New or Noteworthy Tropical Fruits in the Philippines.** — WESTER P. J., in *The Philippine Agricultural Review*, Vol. VIII, No. 2, pp. 103-114, plates VI-IX. Manila, 1915.

It is pointed out that many tropical fruits might be grown much more widely than they are now, and attention is called to the following species, little known comparatively in the eastern hemisphere, or even in the Far East, except in the Philippines, and some of them quite new to fruit growers :

*Antidesma Bunius* Spreng. (" Bignay "). A member of the Euphorbiaceae, a native of Malaya common to the Philippines.

*Dillenia philippinensis* Rolfe (" Catmon "). Fam. Dilleniaceae, native and common in the greater part of the Philippines,but rarely cultivated elsewhere. The fruits, which are too sour to be eaten raw, are excellent when cooked.

*Lansium domesticum* Jack. (" Lansone "). Fam. Meliaceae, very much cultivated in the Philippines for the Manila market.

*Eugenia Curranii* Robinson (" Lipoti "). Fam. Myrtaceae, very probably native to the Philippines, rarely cultivated. Its fruit, too sour for eating raw, forms an excellent jelly.

*Diospyros discolor* Wild. (" Maholo "). Might be beneficially crossed with kaki, the fruit of which would give its aroma to the hybrid. The " maholo " would provide the plant with the means of adaptation to tropical climates.

*Garcinia Mangostana* L. (" Mangosteen ").

*Arctocarpus odoratissima* Blanco (" Marang ") and *A. elastica* Reinw. (" Gomihan ").

*Sandoricum Koetjape* (Burm.) Merr. (" Santol "). Fam Meliaceae, native to Malaya yielding one of the best known fruits in the Philippines.

*Garcinia dulcis* Kurz. (" Baniti "). Fam. Guttiferae. This plant is only found wild in the Philippines. The fruit is of fine appearance and the pulp free from fibre. It is too sour and too lacking in sugar to be eaten raw, but forms an excellent preserve. Its composition is as follows :

| | | | |
|---|---|---|---|
| Water | 84.42 % | Invert sugar | 2.64 % |
| Insoluble matter | 6.78 | Acidity (citric acid) | 3.61 |
| Protein (N × 6.25) | 0.82 | Ash | 1.73 |

*Canarium ovatum*, Engl. (" Pili "). This member of the Burseraceae grows wild in some parts of the Philippines. It is not cultivated. Its nuts are very widely used. There is a form with long nuts (55 to 70 mm. and more), and another with shorter ones (45 to 60 mm). The chemical composition of their kernels is identical, as shown by the following Table.

*Percentage Composition of the Kernels of the "Pili" Nut.*

| | Long Nuts | Short Nuts |
|---|---|---|
| Water | 2.79 % | 2.9 % |
| Fat | 74.37 | 72.53 |
| Protein (N × 6.25) | 12.06 | 11.88 |
| Sucrose | 0.88 | 0.66 |
| Reducing sugars | 0.45 | 1.35 |
| Starch (by difference) | 4.33 | 5.11 |
| Crude fibre | 2.15 | 2.42 |
| Ash | 2.97 | 3.15 |

761 – **The Brazilian Pitanga (*Eugenia uniflora L.*), an excellent Fruit Tree.** — SHAMEL A. D. and POPENCE WILSON, in *The Journal of Heredity*, Vol. VII, No. 4, pp. 179-185, 2 fig. Washington, D. C., April 1916.

During their stay in the State of Bahia (Brazil), the writers frequently observed the "pitanga" in the regions occupied by citrus plantations. The "pitanga" cultivated as a tree (sometimes reaching a height of 33 to 39 feet), bush or hedge, yields a fruit resembling the cherry, but deeply lobed and with a much more distinct flavour.

The "pitanga" is native to Brazil, where it occurs widely. In the States of Rio de Janeiro, Parana, Santa Catharina and Rio Grande do Sul, it occurs wild along streams and on the skirts of the forests. It is also cultivated in other States. The Portuguese long since imported it from Brazil to Goa. Outside Brazil its cultivation is very limited. It is met with in the following countries and localities : Botanical Garden of Saharanpur (British India), Ceylon, Hawai, Algiers (where it is known as "Cayenne cherry" or "square cherry"), Cuba, Florida and California. In the two last countries, where the "pitanga" fruit is known as the "Surinam Cherry", it is little grown, but thrives wonderfully. The cultivation of the "pitanga" therefore appears to be possible wherever citrus trees thrive, and is capable and deserving of great extension.

Reproduction of the plant is by seed. The seedlings show much less variation than those of several long cultivated fruit trees. There being several different forms and marked varieties in each tree, the species should be greatly improved by selection.

The "pitanga" suffers greatly from frosts, but it has withstood temperatures of about — 2.0° to — 2.6° C. Although originating from a moist region, it is resistant to drought and prefers light, sandy, loamy or limestone soils.

The seeds germinate well if sown fresh. It is advisable to sow them in loose earth in pots inserted deep in a hot bed, replanting when the seedlings are about 4 in. high in pots in a warm bed, and to water frequently during the winter. Plants permanently planted out require no further special care.

The shortness of the period between flowering and ripening of the fruit should be noted : it is 3 weeks in Brazil, and 5 or 6 weeks in Florida. In Brazil the plants flower in September and yield a small crop in October. They again blossom for the principal crop in December or January. In

Florida the principal crop is gathered in March, with some late fruit up till May or June. Sometimes there is a second crop at midsummer. In California the crop is gathered in September or October.

Both in Brazil and Florida fructification is abundant and very regular when once the plants have attained a sufficient age, as they require several years to reach full bearing.

The Table shows the composition of the "pitanga" fruit cultivated at Hawaii:

| | |
|---|---|
| Water | 90.7 % |
| Dry matter | 9.3 |
| Dry matter insoluble in water | 1.93 |
| Acids | 1.44 |
| Protein | 1.02 |
| Total sugars | 6.06 |
| Fat | 0.60 |

The fruits are eaten raw, or made into jellies, sherbet, liqueurs, syrups and wines regarded as medicinal (aperient and digestive). The leaves are widely used at Bahia for ornamental purposes.

762 – **Hybrid Direct Bearers in the Regions of Côtes du Rhône, France, in 1915.** — DESMOULINS A. and VILLARD V. in *Le Progrès agricole et viticole*, 33rd Year, No. 10, pp. 228-234; No. 11, pp. 258-260; No. 12, pp. 274-279; No. 13, pp. 306-311. Montpellier, March 5, 12, 19 and 26, 1916. VINE GROWING.

The observations made in 1915 (16th year consecutive observations) (1) are of peculiar importance, because of the exceptional virulence developed by mildew throughout almost the whole of the French vineyards. The different *Vinifera* suffered very badly.

The collection forming the basis of the writers' observations, and which is increased year by year with the principal new products, is located in the valley of the Rhône, on essentially gravelly Alpine alluvial soil, without any limestone and containing numerous rounded pebbles. This soil, with medium fertility, is highly sensitive to drought and combines very favourable conditions for ascertaining the real value of the hybrids under observation, as those with poor phylloxera-resisting powers suffer speedy deterioration. All the varieties observed are free stocks.

Two tables sum up the numerical results of the observations made in 1915. The first gives, for each variety observed, the age, colour of grapes, time of ripening, resistance of foliage and grape bunches to mildew, vigour, fertility, size of bunch, compactness of bunch, size of grapes, cultural particulars etc. The second table indicates the following, in respect to the different varieties the must of which has been analysed (62 analyses altogether): average weight of bunches, general health, bunches, day of harvesting, density of must, corresponding degree of alcohol, acidity of must.

A description is given of the hybrids which yielded the best results,

(1) For the observations in 1914, see *B.* 1915, No. 1301. (*Ed.*)

and the direct bearing hybrids are then classified as follows from different points of view:

I. — CLASSIFICATION OF THE HYBRIDS ACCORDING TO THEIR RESISTANCE TO MILDEW IN 1915 :

A) *Hybrids capable of dispensing with all spraying in normal years, but which may receive one application to advantage, though such is not indispensable in wet years:* Couderc 7120 (the collection of which under observation dispensed entirely with spraying even in 1910 and 1915), 132-11, 142-26, 162-5, 162-97 — Seibel 438, 793, 867, 4995.

B) *Hybrids which may be left unsprayed in normal years without damage, though always receiving one application with benefit after flowering, and which in wet years require 2 applications for complete preservation:* Berthille Seyve 450, 618, 822, 872, 1129 — Caille 16 — Chevallier 3401 — Castel 120, 315, 1028, 6239, 19422 — Couderc Baronne 2, 503, 28-112, 106-38, 106-46, 106-51, 162-46, 171-56, 202-75, 226-58, 235-120, 272-60, 286-68, 299-35, 337-50 — Jurie 102 — Malègue 829-6 — Maureau 2 — Péage 1-18 — Perbos N° 1-46 and N° 6-53 — Seibel 1, 73, 82, 84, 128, 138, 209, 844, 858, 880, 1000, 1077, 2006, 2007, 2052, 2658, 2660, 2666, 2709, 2806, 2821, 2859, 4109, 4121, 4132, 4271, 4499, 4589, 4595, 4596, 4614, 4628, 4629, 4633, 4638, 4643, 4645, 4648, 4656, 4657, 4667, 4669, 4677, 4681, 4683, 4696, 4702, 4707, 4709, 4718, 4720, 4725, 4737, 4748, 4762, 4768, 4782, 4852, 4871, 4955, 4964, 4970, 4979, 4995, 5024, 5090, 5091.

C) *Hybrids requiring 2 sprayings in normal years, one before flowering and one after ; and requiring additional application in years favourable to mildew* ; Couderc-Baronne 4, 151, 156 ; Gaillard 157 ; Malègue 474-5 ; Péage 5-10, 5-17 ; Seibel 2653, 2655, 2686, 4111, 4151, 4271, 4433, 4461, 4591, 4615, 4636, 4662, 4716, 4767, 4951, 4969, 4973, 4989, 5061.

D) *Hybrids requiring nearly as many sprayings as the Vinifera* : Malègue 469-9, Seibel 4616, 4968, 4991, 4999, 5001.

II. — CLASSIFICATION ACCORDING TO THE INTENSITY OF COLOUR OF THE MUST :

1) *Hybrids with pink or light red must* : Couderc 202-75, Seibel 1000, 2859.

2) *Hybrids with ordinary red must* : Couderc 7120, 132-11, 162-97, 363-N, Seibel 1, 4271, 4268, 4643, Malègue 829-6, Berthille-Seyve 618, 822.

3) *" Teinturier " hybrids, with dark red must :* Couderc 106-46 (demi-teinturier); Seibel 128-2007, 2660, 4499 ; Berthille-Seyve 872-1129.

III. — CLASSIFICATION OF HYBRIDS ACCORDING TO THE NATURE OF THE SOIL IN WHICH THEY SEEM TO THRIVE BEST (the limestone factor is disregarded in this classification : in limestone soils grafting must be resorted to for hybrids not possessing sufficient resistance to chlorosis) :

A) Dry Soils. — Can be planted out freely :

1) *1st period black grape* : Couderc 202-75 Seibel 1000, 2859, 4643, Berthille-Seyve 872, 1129.

2) *2nd period black grape* : Couderc 162-97.

3) *Black grape, end of 2nd or 3rd period of ripening* : Couderc 7120, 132-11, Berthille-Seyve 822, Seibel 4271.

4) *White grape, 1st period*: Couderc 272-60, 162-5, Berthille-Seyve 450

5) *White grape, 2nd period*: Seibel 793, 858, 867, 4633.

6) *White grape, end of 2nd or 3rd period*: Seibel 4595, 4762.

B) Medium Soils. — Can be planted and cultivated free:

1) *1st period black grape*: Those mentioned for the dry soils plus: Seibel 128, Couderc 106-46, Seibel 4499, 4628.

2) *2nd period black grape*: Couderc 162-97, Seibel 2007, 2660, Bethille Seyve 618, Malègue 829-6, Couderc 363-N.

3) *Black grape, end of 2nd or 3rd period*: Those mentioned for the dry soils.

4) *1st period white grape*: Those mentioned for the dry soils, and also: Castel 1028, Seibel 880, 4681 Gaillard 157.

5) *2nd period white grape*: Those mentioned for the dry soils, and also: Castel 13 706, Seibel 4657.

6) *White grape, from end of 2nd or 3rd period*: As for the dry soils, and also: Seibel 4595, 4762.

C) Good Soils. — Can be planted free:

1) *1st period black grape*: Seibel 128, 4199, 4628.

2) *2nd period black grape*: Seibel 1, 2007, 2660, Berthille-Seyve 618, Malègue 829-6, Couderc 363-N.

3) *Black grape, end of 2nd or 3rd period*: Couderc 7120, Berthille-Seyve 822.

4) *1st period white grape*: Castel 1028, Seibel 880, 4781, Gaillard 157, Couderc 299-35 (Muscat du Moulin).

5) *2nd period white grape*: Castel 13706.

During their observations the writers found that the quantity of grape produced increased up to the 6th year of life of the hybrid, and then remained more or less constant.

By resorting to grafting for hybrids also, their length of life is increased and the range of adaptivity and utilisation of the different varieties of hybrids is very much extended. The question, however, of affinity of the direct bearing hybrids with the principal grafting hosts is not very well known as yet. Save for a few exceptions, hybrids are generally good scions, especially for hosts of *Vinifera* strain (Franco-American), especially on the various *Rupestris* × *Vinifera*.

763 – **Observations on Direct Bearers at the Royal Oenological School of Conegliano, Italy.** — DALMASSO G., in *Rivista di Viticoltura, Enologia ed Agraria*, Year XXII, Series V, No. 4, pp. 57-62, No. 5, pp. 74-78, No. 6, pp. 90-92, No. 7, pp. 108-111, No. 8, pp. 127-129. Conegliano, February 15, March 1-15, April 1-15, 1916.

These observations, made during the wine season of 1915, relate to the following hybrids: Castel 120, 1028, 3917, 4233, 5009, 6011, 6030, 6606, 7214 black, 7214 white, 13317, 13320; Couderc 101, 603, 84-3, 93-5, 1305, 4308, 4401, 74-17, 82-32, 106-46, 126-20, 126-21, 132-11, 198-21, 199-88, 267-27, 28-112, 746-51, 202-137; Seibel 1, 156, 1004, 1077, 2007: Alicante Rupestris Terras No. 20; Fournié.

The following hybrids showed the best qualities: Seibel, 1, 1077; Couderc 4401, 106-46; Castel 6606. All the last named gave a fairly abundant

production, an ordinary (red) table or semi-blending wine without foxy flavour, and of good quality. They also were found to posses great resisting powers to fungoids diseases. (The locality where the experiments took place being immune from phylloxera, it was not possible to test the resistance of the hybrids to this disease).

Among the mediocre hybrids, which are at any rate still worth keeping under observation, possessing some good qualities, the writer mentions: Castel 5009, 6030, 7214, 13317, 13320; Couderc 603, 4308, 96-32, 267-27, 746-51, 202-137; Seibel 156, 2007; Fournié. All of them yielded a sufficient or abundant crop of mediocre or even better quality, and a wine without foxy taste. They all proved very resistant to mildew and Oidium, Even in a year as unfavourable as 1915, both these last hybrids and those mentioned above remained perfectly healthy without any treatment being applied to them.

With the exception of Couderc 746-51 which has white grapes, all the hybrids mentioned as good or mediocre have black grapes. In the entire collection there was only one white-grape hybrid which was mediocre, Couderc 746-51. In addition, it has the defect that it yields a wine not entirely free from foxy taste.

764 – **An Interesting Problem in Connection with Radial Pruning.** — DALMASSO G., in *La Rivista di Viticoltura, Enologia ed Agraria*, Year XXII, Series V, No. 10, pp. 156-159. Conegliano, May 15, 1916.

Radial pruning has elicited interesting discussions as to the method of its application, and the question whether on each rod (" cordon ") small

TABLE I. — *Riesling Italico (hill).*

| Year | Production per vine Kg. | | Sugar in must | | Acidity of must | | Ripening index | |
|---|---|---|---|---|---|---|---|---|
| | Small arcs shorter at base | Small arcs longer at base | Small arcs longer at base | Small arcs shorter at base | Small arcs longer at base | Small arcs shorter at base | Small arcs longer at base | Small arcs shorter at base |
| 1911 . . . . | 4.35 | 3.46 | 19.30 | 19.65 | — | — | — | — |
| 1912 . . . . | 4.40 | 3.60 | 19.70 | 18.60 | — | — | — | — |
| 1913 . . . . | 5.95 | 4.66 | 20.40 | 19.75 | 9.80 | 9.75 | 2.08 | 2.02 |
| 1914 . . . . | 3.93 | 2.94 | 21.35 | 22.20 | 7.12 | 6.74 | 3.00 | 3.28 |
| 1915 . . . . | 2.37 | 3.05 | 22.30 | 6.56 | 6.56 | 6.18 | 3.40 | 3.83 |
| Averages | 4.20 | 3.54 | 20.61 | 20.78 | 7.83 | 7.56 | 2.83 | 3.04 |

TABLE II. — *Cabernet franc (hill).*

| | | | | | | | | |
|---|---|---|---|---|---|---|---|---|
| 1911 . . . . | 7.222 | 5.410 | 19.00 | 18.40 | — | — | — | — |
| 1912 . . . . | 2.722 | 2.058 | 21.50 | 21.80 | — | — | — | — |
| 1913 . . . . | 5.000 | 2.850 | 20.53 | 20.28 | 9.25 | 9.25 | 2.21 | 2.19 |
| 1914 . . . . | 8.550 | 5.470 | 19.65 | 19.30 | 9.08 | 8.25 | 2.16 | 2.34 |
| 1915 . . . . | 5.830 | 4.600 | 21.40 | 20.05 | 7.87 | 6.90 | 2.72 | 2.99 |
| Averages | 5.865 | 4.077 | 20.41 | 19.96 | 8.70 | 8.13 | 2.36 | 2.47 |

fruit-setting arcs of uniform length should be left or whether they should be longer at the base or at the end of the section, has not yet been solved. The Author, after reporting the different opinions of TRENTIN, SANNINO and STRADAJOLI, sets out the results of the trials carried out for the last 5 years at the Wine School of Conegliano, in two vineyards situated in the upper part of the farm of that school. It is obvious from the two following tables, that for horizontal or slightly oblique radii it is advisable to leave the arcs at the base longer. The production per unit shows a marked advantage on the part of the arcs longer at the base, and this quantitative difference more than makes up for the slight detriment to quality.

765 – **Program for the Triennal Period 1915-17 arranged by the Swedish State Institute of Experimental Forestry** (Av styrelsen för Statens Skogsförsöksanstalt for trearsperioden 1915-1917 fastställt arbetsprogram). — *Meddelanden från Statens Skogsförsöksanstalt*, Part 12, 1915, pp. 58-60. Stockholm, 1916. FORESTRY

Following a meeting of the members of the governing Council and the professors of the Swedish High School of Forestry and of the Institute of Experimental Forestry, together with three specially summoned experts, the program of work to be followed at the Institute of Experimental Forestry has been sanctioned, with the right for the Institute to carry out minor investigations not laid down (1).

## I. — THE QUESTION OF REGENERATION.

*a*) Seed investigations.

Investigations shall be begun for the discovery of the most suitable time for gathering cones and as regards the keeping of forest seeds (Forest Section). The biology of germination of the most important forest trees shall be studied, with special attention to the conditions of germination offered by the soil (Physical Section). The experimental plots for the investigation of the percentage of soil germination of the Norrland pine-seed shall be revised and the results prepared for publication (Forest Section). Existing areas for testing seeds of various origins shall be revised when so required (Forest Section).

*b*) Special measures for securing natural regeneration.

In suitable places experiments by means of thinning in accordance with WAGNER's method shall be carried out (Forest Section), and in connection herewith the seed-producing capacity of forest margins of different composition shall be studied (Forest Section). The degree of regrowth in cleared lands shall be investigated in connection with their lie as to the points of the compass (Forest Section). The effect of brushwood burning and complete clearing of the soil shall be investigated with regard to the supply of nitrogen in the soil (Physical Section).

*c*) Measures of forest cultivation.

(1) As is prescribed in § 15 of the new Royal Instructions for the State Institute of Experimental Forestry (Cf. *Kungl. Maj:ts nådiga instruktion för Statens Skogsförsöksanstalt*; [illegible] *Stockholms slott den 5 mars 1915*). *Ed.*

The experiments instituted for the investigation of the most suitable time for sowing in Norrland shall be continued (Forest section). Existing experimental cultures with pine and spruce in various combinations shall be revised, if need be (Forest Section). The course of growth in the roots of planted trees shall be investigated with a view to the discovery of the most suitable time for planting (Forest Section or Physical Section).

*d*) The problem of regeneration in special types of forest.

The investigations previously carried on concerning the difficulties of regeneration on the pine-heaths shall be continued so far as is necessary for the completion of a report concerning this problem (Physical Section).

## II. — Proceedings as regards the composition of forests.

*a*) Slight and extensive thinning operations.

Existing areas for slight and extensive thinning shall be revised if necessary, and new areas shall be arranged so far as time permits, chiefly in pine forests and spruce forests of low productivity and in spruce forests in Norrland of all grades of productivity, in the birch forests of Norrland, in certain forests composed of aspen and oak, and in mixed coniferous forests (Forest Section). In the last named mixed forests there shall be arranged areas of young seedlands or plantations in order to throw light upon the best way of raising forests of mixed composition (Forest Section),

*b*) Alteration of ground flora.

In some of the more suitable experimental areas for heavy thinning the ground vegetation shall be investigated in accordance with the Raunkiaer method, as modified by Lagerberg, in order to obtain fixed points for estimating the effect of the most thorough thinning upon the ground vegetation (Physical Section).

## III. — Diseases and injuries of forest trees.

*a*) Diseases and injuries caused by fungi.

The occurrence and spread of the roots in the spruces whose tops were broken off during the winter of 1910-11 shall be examined (Physical Section). Moreover the roots of coniferous trees shall be taken up for closer investigation, with special attention to the conditions in the over-aged forests in Norrland (Physical Section).

*b*) Injuries caused by insects.

Investigations shall be instituted as regards injurious insects both in spruce cones and pine cones and in forest plants in nurseries. The extent of the increased ravages of bark beetles in certain districts shall be studied; and at the same time knowledge of the known methods of effectively dealing with these last named insects should be spread amongst forests owners. In addition to this, should other insect ravages take place, studies should be instituted and advice given as to the checking of their ravages (Entomological Section).

### IV. — Races of forest trees and the serviceableness of foreign forest trees to Sweden.

*a*) Race studies of spruce and pine.

Previous plantations of plants raised from selected seed shall be looked after so far as is necessary (Physical Section).

*b*) German spruce seed.

Existing stocks of plants of German spruce shall be used for the laying out of experimental areas, and the stock of plants shall be handed over to the superintendent of forest-districts (" revirs ") with the request that they may be used in the forest cultures of the district (Forest Section).

*c*) Larch.

Further areas shall be laid out in larches, after which the results of the investigation into this kind of tree shall be prepared for publication (Forest Section).

### V. — Investigations concerning forest land.

*a*) Types of soil.

With a view to effecting a systematic survey of the different types of forest land in Sweden an investigation of the most important types shall be begun, in which attention shall be directed both to the genesis of the types and to their value from the standpoint of forestal productivity (Physical Section.

*b*) The genesis and improvement of degenerate forest land.

The studies of ling-heaths shall be continued in the same way as before with a view to summarizing the observations in a publication (Forest and Physical Sections).

*c*) Studies of the waterlogging of the forests in Norrland shall be continued in the same way as before and, so far as time allows, preliminary investigations shall be made concerning the waterlogging of forest land in the Southwest of Sweden (Physical Section).

*d*) The transformation of moss land to forest land.

Even if time is not available for the special investigation of this matter, yet attention should be directed to this problem when a suitable opportunity offers.

## LIVE STOCK AND BREEDING.

766 - **Injury to Livestock by *Simulium columbaczense*, in Hungary.** — Schmidt M., in Àllatorvosi Lapok (Veterinary Journal), Year XXXIX, No. 12, pp. 83-85; No. 13, pp. 89-91. Budapest, March 18 and 25, 1916. HYGIENE

In Hungary, the periodical outbreaks of *Simulium columbaczense* at times occasion exceedingly grave injury to cattle. Thus, in 1783, in Banat, there died from the bite of these insects: 52 horses, 131 cattle, 310 sheep and 130 pigs. In 1813 they killed 200 cattle in the neighbourhood

of Arad and 500 in the neighbourhood of Versecz. In 1880, 400 pigs, 80 horses and 40 cattle perished within 4 hours at Kevevara, and 100 cattle, 5 horses and 8 pigs in the "comitat" of Hunyad. Finally, in April 1915, the appearance of swarms of *S. columbaczense* caused widespread damage in the "comitat" of Temes alone, with a loss of 41 horses, 404 cattle, and 320 pigs. The places where outbreaks of *Simulium* occur are enumerated, with a description of the appearance of their swarms and the behaviour of domestic animals before and after the attack. This is followed by some clinical observations on the infection due to the bite.

Where large numbers of animals have been infected, there are many difficulties in the way of treatment, and prophylactic measures alone can be adopted. The writer employed the following method:

The flies were removed from the body of the animals by rubbing the skin with a clean cloth, after which the skin was washed with camphorated spirit. The animals were given 300 to 500 grams of brandy per head, diluted in water; in severe cases this dose was repeated a few hours later. Under similar conditions, other cardiac agents are to be recommended, and likewise the administration of purgatives to cure digestive troubles. Tumours were treated at the outset with subacetate of lead, but the results being negative a mixture of soap dissolved in alcohol and spirit of camphor with a little turpentine added was employed. Thanks to repeated friction with this and constant exercise (long runs) the tumours completely disappeared.

It being impossible to overcome the disease, the only thing to be done is to protect animals individually. When the flies make their appearance the animals must be kept in the stable, or if already out to grass they must be removed from the places visited by the insects. Since, however, local conditions do not always allow of adopting this course, the flies must be driven off by burning wet branches, dung or straw, or anything which will produce a dense smoke, to which the animals instinctively draw near. For animals used for draught or other work, a protective coat of oil or other fatty substance should be applied to the skin. The application of concentrated tar is not advisable. Valuable horses should be covered with fly nets and the stables built so as to keep flies out (fly flaps on doors and windows, or fire smoking in front of entrance).

The method of communication of the disease resulting from the bites of the *Simulium*, often assuming an acute form and causing sudden death, remains unknown hitherto. Microscopical analyses of the blood of the diseased animals and the spleen of the dead ones preclude any participation of bacteria or protozoa. Test animals inoculated with extract of *Simulium* remained free, which suggests that the extract possesses no toxic properties. Again, in the body of *Simulium* no micro-organisms were found. Nevertheless, animals attacked fall seriously ill within a few minutes, and often die within half an hour, although death from asphyxia is very rare, as was proved by a post-mortem of dead or slaughtered animals. In all the animals attacked, however, the Author observes some symptoms of nervous derangement, such as diminution of sensitiveness, general torpor,

uncoordinated movements and blindness. These symptoms, as well as those of the heart (rapid palpitation) prove that *S. columbaczense* injects some toxic substance which reaches the nervous system and paralyses the nervous centres of the medulla oblongata; during this process the modification in the circulation causes tumours on the soft part of the larynx, which hinders respiration.

The Author suggests that further extensive experiments be undertaken with the blood of diseased animals, and the pathological changes of the nervous tissue, if any, be studied.

The meat of slaughtered animals is quite harmless to man. To facilitate control, herdsmen should, before the *Simulium* appear, be made acquainted with various protective means and recommended to destroy severely attacked animals before death occurs and to bleed them thoroughly.

767 – **The Possible Passage of Trypanosomes into Milk.** — LANFRANCHI ALESSANDRO, in *Atti della Reale Accademia dei Lincei*, 5th Series, *Rendiconti*, Vol. XXV, Part 5, 1st Half Year, pp. 369-373. Rome, 1916.

Work carried out at the Institute of Pathology and Clinical Medicine of the Royal University of Bologna.

Several writers have shown that a large number of trypanosomes are able to pass through the different mucous membranes, and NATTAN LARRIER has already taken in hand the solution of the problem of trypanosomes passing into milk. The result was affirmative as regards *Tr. schizotripanum* Cruzy, and almost always negative for *Tr. equiperdum*. The writer next describes his experiments with the trypanosomes *Brucei, Evansi, rodesiense* and *gambiense*.

The virus was injected into the veins of bitches which had just littered. It was desired to find: 1) whether the young when allowed to suck were infected; 2) whether the presence of trypanosomes could be detected by di ect examination of milk; 3) whether the milk when inoculated into the peritoneum was able to infect rats or mice.

From the results it is concluded that:

1) The passage of the trypanosomes *Brucei, rodesiense* and *gambiense* into milk is possible.

2) The infection with the virus of *Brucei* and *gambiense* can be transmitted by suckling.

768 – **Enquiries and Experiments in connection with the Immunity of Cattle against Epizootic Foot-and-Mouth Disease.** — TERNI CAMILLO, in *La Clinica veterinaria*, XXXIXth year, No. 9, pp. 257-261. Milan, May 15, 1916.

The results obtained in the investigations and tests carried out at the "Stazione sperimentale per le malattie infettive" of Milan, confirm those which had previously been obtained by Messrs. COSCO and AGUZZI (1) and lead to the following conclusions:

1) The virus is preserved indefinitely by means of its successive passage through animals susceptible to the disease, when blood products (se-

(1) See *B.* June 1916. N° 661. (*Ed.*)

rum and red globules) are used in the same way as with the products of local lesions. The best method for preserving its virulence and observing its infective power in those tissues where the disease arises preferentially under natural conditions, is that of *inoculating into the tongue* infective material or blood taken from the animal during a period of fever excee ding 40° C., or the product of local lesions. The maximum virulence is produced by passing through the epithelium of the digestive apparatus (tongue or paunch).

2) The virus obtained in this way, whether fixed or temporary, represents the maximum intensity of virulence both in infective and spreading power, the adult animal falling sick in 24 to 36 hours. It almost always kills young animals, especially when not yet weaned (calves, lambs, kids or sucking pigs), by general infection, the virus being constantly present in the blood.

3) The present experiments would appear to show that several kinds of animals are capable of containing in their blood for some time a very virulent virus of foot-and-mouth disease, without specific external symptoms or with merely slight lesions of the mucous membrane of the digestive apparatus or the pad of the short pastern.

4) With the blood products kept in a thermostat, or cold, until the virulence is exhausted, it is possible to create a resistance to foot-and-mouth disease in animals, which will allow of making successive inoculations of living virus, and of obtaining a much higher degree of immunity as compared with animals which have overcome the disease in a serious form (38 months of observations on a group of 20 cattle).

5) Similarly it is found that the serum of the blood of cattle which have passed beyond the febrile stage of the disease is of marked curative and preventive efficacy against even a malignant form of virus. The inoculation of the blood as such or of serum, under these conditions (containing the maximum of antibodies), is a sure preventive of the death of adult animals, and results in their speedy recovery. A therapeutic system in the cowshed or cattle-pen is therefore practically possible, if serum be taken from recently cured animals and injected into those most seriously ill. In this connection, the haemovaccination advocated by PERRONCITO also possesses an acceptable pratical basis.

6) In foot-and mouth disease, 2 forms of immunity are distinguished, one general, which is located in the blood and more particularly in the white globules (preferentially eosinophiles), the red globules and the plasma; the other of a more strictly histogenic character and involving the protective epithelia of the digestive passages. The latter is less lasting than the immunity located in the blood, and is strictly related to the wear and regeneration of the epithelial cells. In cattle, by means of *injection into the tongue*, it is found that the gradual loss of immunity begins with the *epithelium of the tongue*, followed by that of the rumen and the small intestine, and the mucous membrane of the hoof pad.

Thus, as happens under natural conditions, there may be animals presenting serious external symptoms, involving chiefly the epithelium of the

tongue, while the virus does not pass into the blood, which still retains a sufficient degree of immunity to prevent general infection, or else it enters the blood for a very short time and in an attenuated form only. These are the cases when the feverish reaction does not take place or only amounts to a few tenths of a degree for a brief period.

The clinical forms of foot and-mouth disease (external, internal or malignant) are in direct relation with the fluctuations in the degree of immunity existing in the local tissues and the blood. When the animal has never had the infection, or has completely lost the internal or local immunity produced by a previous attack of the disease, the slightest injury to the epithelium of the tongue and the rumen (for instance, injuries caused by the heads of rye-grass, in the presence of the virus) suffices to produce a first focus of the disease, which in a few hours causes the infection of the blood, marked by the onset of fever. When on the other hand, as frequently occurs, after an attack of foot-and-mouth disease, some degree of immunity still continues in the blood, the seat of disease involving one or more points of the epithelium of the entrance to the digestive passages remains localised but the virus may, in this first passage, acquire an increase of infective activity for other susceptible animals.

7) Therefore, in the production of immunity against the malignant virus of the disease, *i. e.* the one with the maximum of infecting and spreading power, the writer preferred to combine the products of local lesions with those of the blood in order to utilise the substances elaborated by the virus in the tissues for which it exhibits a preference, and obtain an enhancement of local histogenic immunity in order to secure a lasting and sure prevention of external lesions. The latter, even if slight, may have serious consequences, owing to the occurrence of secondary symptoms or the spread of the virus through the body.

In the lesions of the epithelium, substances are observed which may be termed *granulo-stimulines* and *granulo-lysines*, inasmuch as they exert, as a specific character, in the first place a positive chemiotaxy for the leucocytes with eosinophile granulations, and afterwards a lithic action, which results in an infiltration of the eosinophile granulations into the tissues of the sick animal in direct ratio to the gravity of the infection. The character of immunity is indicated by the cessation of the process of dissolution of the eosinophile cells.

8) In animals which have died from foot-and-mouth disease at a late period, the virus may also not be present in the blood, but is found localised in various organs, especially in the cardiac muscle, the brain, the liver and the kidney, less frequently in the spleen or the marrow. When the virus is in the blood it is chiefly found in the venous blood, being in largest amount and virulence in the portal vein.

The bulk of the virus is eliminated from the blood through the kidney. This elimination also occurs, though in a lesser degree, through the milk and the saliva. In the majority of cases these only become infectious owing to the products of local lesions. It can even be shown that the

action of the saliva tends to attenuate the virus, while, in the urine, its virulence is long maintained unaltered (1).

ANATOMY AND PHYSIOLOGY: GENERALITIES.

769 - **Osmotic Equilibrium between Blood and Milk in the Cow.** — VAN DER LAAN, F. H. in *Biochemische Zeitschrift*, Vol. 73, Nos. 5-6, pp. 313-325. Berlin, April 4, 1916.

The writer's previous experiments (2), in relation to osmotic concentration of the blood, milk and bile in the cow, have shown that the value of the three concentrations is the same, even if the osmotic concentration of the blood is artificially modified. These experiments, however, having all been made with healthy animals, the concentration in sick animals still remained to be studied.

It has been ascertained that in man certain diseases, chiefly those of the heart and kidneys, produce a great increase of osmotic pressure in the blood, owing to derangements of metabolism. Doctors therefore ascertain the freezing point of the blood of their patient when they wish to find out whether one of the kidneys or both are diseased.

The writer used this method for studying the osmotic concentration of the blood in 8 cows suffering from : toxemia, constipation, chronic peritonitis with acute anteritis, pyelonephritis, loss of blood through perforation of the rectum, tuberculosis (2 cases), fracture of the ileum. With this object he determined the freezing point of the blood, the milk, and in some cases the bile. The investigations showed that the freezing point of the blood and milk are not modified by the disease. In one case only the osmotic pressure of the blood was increased owing to auto-intoxication, but the osmotic pressure of the milk had undergone a corresponding increase. The Author mentions in this connection an experiment made by PLIESTERS on a cow suffering from anthrax (splenic fever), which gave a similar result.

In spite of the small number of cases observed, it is believed that the diseased condition can only increase and never reduce the depression of the freezing point of the blood of the cow. In most cases the disease will not

(1) The question dealt with here is, as it were, the crux of the problem of immunity, not only in respect to foot-and-mouth disease, but also to other infectious diseases with filterable virus located in the blood. Thus, for instance, in cow-pox just as in foot-and-mouth disease, by passage through hypersensitive animals, a virus of special infective activity to the blood can be produced. In that case cutaneous inoculation of the blood or its components separately produces the characteristic pustules even in man. By using this intensified virus a widespread eruption is easily caused in man (4 cases out of 12 inoculated), but the virulence may be reduced if the blood is kept on glass for a given period, in the presence of oxygen.

In comparative studies of cow-pox and foot-and-mouth disease, the writer found that the two viruses behave similarly as regards local and general immunity. In some cattle which had been inoculated with positive results more than 7 years since, he observed that the immunity persisted as regards cutaneous inoculation or quite temporary reactions alone were produced, while when inoculated on the mucous membrane (tongue) characteristic pustules were obtained but then the virus did not pass into the blood. If, on the other hand, young animals are used which have never been infected (preferably meadow-fed, as then less liable to contagion through human vaccination), whatever the channel of entrance, the virus passes into the blood and continues present there during the febrile period.

(2) See *B.* 1915, No. 1314.

exercise any influence on the absolute freezing point of the blood and the milk. For practical milk testing this fact is very important, as the lowering of the freezing point of milk is often justified on the ground that it comes from a diseased cow.

The osmotic pressure of the milk, and in some cases of the blood, was also studied in several cows with a diseased udder. Most of the animals had streptococcal mastitis, the mastitis being of a tuberculous nature in 2 cases only. Experiment proved that the milk was of very abnormal composition. The diseased teats regularly gave an abnormal milk quite different from the normal.

The lactose had generally disappeared, and the content of ash and chlorine corresponded to that of the blood serum. In spite of all these anomalies, however, the freezing point of the milk was always normal, except in one case where the animal was very ill owing to auto-intoxication. The blood of the cows yielding this milk had a lower freezing point than that of the blood of healthy animals, but it corresponded exactly to that of the milk. These experiments therefore show that the worst forms of mastitis cannot affect the osmotic concentration of the blood and milk in cows.

The fact that as the mastitis develops the composition of the milk resembles that of the blood serum more and more, has been explained by the hypothesis that the process of secretion is gradually replaced by one of filtration. It is a point in favour of this view that the freezing point is not modified by the disease, because the filtered product (milk) has the same freezing point as the blood of the same cow.

From the fact that mastitis does not modify the equilibrium between the osmotic concentration of the blood and that of the milk, it is inferred that milk from the diseasesd teats must have the same freezing point as from the healthy ones. Experiment proved the correctness of this view.

By another series of experiments it was demonstrated that in cases of mastitis the depression of the freezing point of milk remains unaltered so long as the disease is not followed by general intoxication increasing the osmotic concentration of the blood. This seems to contradict the results obtained by the other investigators. The writer believes that the depressions observed by several investigators in the milk from a diseased teat was due to detritus, etc, mixed with the milk in question.

The cream has the same freezing point as the corresponding skim milk.

The depressionof the freezing point, both in milk from healthy and from diseased udders, is never less than 0.53 C.

770 – **Grain Screenings and Results of Feeding Experiments in Canada.** — DYMOND J. R. ARCHIBALD E. S., and ELDORF F. C., in *Dominion of Canada, Department of Agriculture*, 44 pp. 8 tables. Ottawa, 1915. FEEDS AND FEEDING

Cereal growing has rapidly increased during the past few years in the prairie region of Canada. As a result of the system of continuous cultivation, the crops contain a noteworthy proportion of foreign seed. In the year ended 31st August 1913, the Inspection Service of the Cereals Commission of the Department of Commerce recorded the presence at the central silos of more than 100 000 tons of screenings of wheat, oats, barley and lin-

seed. It is calculated that the costs of carriage of this material from the fields to the silos amounts to 650 000 dollars. It contains empty or broken seeds of wheat, oats, barley and flax, with variable proportions of a large number of weed seeds. The greater part is exported to the United States, where it is screened once more for the production of different cattle feeds.

Owing to the extreme smallness of the seeds of certain weeds, and the hardness of some others, they cannot be crushed by the ordinary grinding machinery. Special plant is required, which is expensive in cost and operation, for the purpose of thoroughly grinding all impurities. If screened again through a zinc screen with meshes of 1.8 mm so as to separate the very smallest weed seeds, which are called black screenings, crushing can very well be carried out with ordinary grinding machines, if the screening and crushing are carefully done. This gets rid of about 40 % of the ordinary screenings.

It must be remembered that feeds manufactured with screenings not properly cleaned may contain thousands of live weed seeds per pound. Feeds of this kind should not be given to cattle, as this might promote the spread of weeds to the extent of causing thousands of dollars worth of damage.

The feeding experiments carried out with cows in milk, pigs, lambs and chickens, showed that the blank screenings are valueless as a food and are also expensive owing to the adulteration which they cause. When mixed in considerable proportions with another food they render it distasteful to all livestock. Although by adding molasses to crushed screenings containing their share of black screenings the food is rendered appetising, it is not economical. In short, the cheapest way of rendering screenings palatable is to remove the black seeds.

The screenings, with their black part eliminated, may be given without restriction to horses, cattle, sheep or pigs. It is preferable, however, that they should not form more than 50 to 60 % of the total grain ration. Buckwheat screenings are particularly suited as food for poultry, but it seems dangerous to give the latter linseed screenings.

As the makers of threshing machines all claim that their machines are, or can be, fitted with screens which are able to separate a large portion of the waste in threshing, the Authors are of opinion that, if greater care were taken in separating the grain during threshing, it would not only save the cost of transport of the impurities, but the farmer would in this way be provided on the spot with a very useful feed which he could employ direct on his farm or sell to breeders. It should, however, be pointed out that weeds cause enormous losses to farmers every year, so much so that though it is desirable that everything of value as a food, such as screenings, should be turned to account, it would be preferable to burn them rather than use them in a way which might help the growth of weeds.

To sum up, from the practical point of view, the black screenings must be separated from the others and burnt, as they only reduce the nutritive value of the other screenings comprising bigger seeds. They also form a danger with regard to the spread of weeds. They have an appreciable fuel

value ; they chiefly represent seeds of *Chenopodium album* L. and Cruciferae rich in oil, which it might be profitable to burn after mixing with coal.

771 – **Spotted Asses.** — JENKS ALBERT ERNEST, in *The Journal of Heredity*, Vol. VII, No. 4, pp. 165-168, 2 figs. Washington, D. C., April 1916. HORSES ASSES AND MULES

Wild specimens of domestic breeds, and the wild species most nearly related to domestic animals, are spotted in a typical or specific way, but it is rare for these markings to be white. On the other hand, domestic and pet animals show white spots in almost all species. This white spotting, however, has rarely been reported up to the present for the Asiatic elephant (*Elephas indicus*) and the dromedary (*Camelus dromedarius*.) The writer never found it reported of the donkey in the literature of the subject. He therefore describes some cases of white spots on a grey coat or black on a white coat which he observed in the United States (Arizona) and in Italy (Naples and environs). It should be noted that the 3 species rarely spotted white, namely the elephant, the dromedary and the ass, have been much less subject to selective breeding than the majority of the other domestic species. They exhibit only a small number of breeds. This confirms the idea that hybridisation by selection is an important factor in the formation of white spots in domestic animals.

772 – **The "Miranda" Breed of Cattle (Braganza, Portugal).** — CRUZ SHEPPERD, in *Revista de Medicina Veterinaria*, 14th Year, No. 168, pp. 351-360. Lisbon, February 1916. CATTLE

The special environmental conditions of the place of origin of the Portuguese "Mirandesa" breed of cattle, namely, isolation and scarcity of forage, have imparted great purity to it, together with the characteristic of furnishing particularly fine working animals. Together with the "Brava", "Landaise", "Charolaise" and "Sicilian" breeds, it forms the Iberian stock, originating from *Bos primigenius*. From it there have been derived by progressive adaptation to different environments, the sub-races 1) "Braganza" ; 2) "Beira"; 3) "Mirandes estremenho" or "Ratinho serrano" which form almost the whole of the cattle stock of Estremadura ; and 4) "Jarmelo", a breed specially noticeable for its excellent milk-producing capacity.

By improving the pasturage, it will be easy to make the "Mirandesa" breed excellent for meat and milk production, in addition to its working powers. Cattle of this breed are now being exported in large numbers to Spain, where they are fattened for slaughter. Their principal characteristics are : straight profile of head, straight medium sized horns, neck short and thick, chest wide, very high and deep, shoulders muscular, back slightly arched, rump higher than the withers, paunch regular, hips projecting, low insertion of tail, limbs long bony, often badly balanced, coat chestnut more or less dark, with a light yellow strip along the line of the back, from the withers to the base of the tail and darker in the bull than in the cow.

773 - **Feeding Cows with the Subcutaneous Matter of Skins intended for Tanning; Experiments in Germany** (1). — GERLACH, in *Deutsche Landwirtschaftliche Presse*, 43rd Year, No. 26, p. 229. Berlin, March 29, 1916.

For his feeding experiments the Author used a subcutaneous material (" Leimleder ", glue leather i. e. leather cuttings containing gelatinous matter), at present sold in Germany under the inappropriate name of " Baden meat meal " and containing, according to the analysis made by him: 14.72 % of water, 55.77 % of crude protein, 12.35 % of fat, 10.06 % of mineral matter. The crude protein is a mixture of albuminoids (chiefly collagen), pure proteins and amides, being substances soluble in the gastric juices of animals.

As test animals there were used 9 milch cows between the 2nd and 3rd month of the lactation period. They were given as basal ration per 1000 kilograms live weight per day: 5 kg. chopped forage, 4 kg. hay, 20 kg. beetroot leaf silage, 15 kg. mangolds, 20 kg. potatoes, 1.5 kg. wheat bran, 1 kg. of lupins with the bitter taste removed. The starch value was 10.3 kg; the quantity of pure digestible protein was 1.1 kg. As cows which have just calved must usually receive 1.6 to 1.9 kg of pure digestible protein and a starch value of 9.8 to 11.2 kg, the basal ration lacked 45 to 73 % of the first element, while the starch value was fairly large. To make up the deficiency there was added to the basal ration, for one group 3 kg. of linseed cake and for the other 1.5 kg. of glue leather. The animals at once took to the latter.

The experiment, which was begun on the 20th January, was intended to continue until the 28th February. During that time the milk secretion was 10 % less in the glue leather group, but the milk was a little richer in fat.

The difference between the production of the two groups being small, the experiment was continued until the 23rd March. The group which at first received glue leather was then given linseed oil cake, and vice-versa. During this second period, the cows receiving glue leather gave somewhat more abundant and more fatty milk: this increase in the percentage of fat was also observed in the first period.

Assuming that the linseed cake caused the production of 100 parts of milk and 100 parts of fat, the glue leather produced 98 and 102 parts respectively.

In conclusion, glue leather is recommended as a good concentrate for cows in milk.

774 - **Skim Milk with an Addition of Sweetened Flour for Rearing Sucking Calves.** — EDIN HAROLD in *Kungl. Landtbruks-Akademiens Handlingar, och Tidskrift*. Year IV, Nos. 1-2, pp. 83-120. Stockholm 1916.

In Sweden, 1 700 000 calves are produced annually of which only 400 000 are reared, the others going to the butcher. The majority are sold shortly after birth, when the meat has not yet " set " and the price is always low, not exceeding 10s. 7d. per cwt. live weight.

(1) In connection with the use of this substance in pig feeding, see *B.* 1915, No. 1064. (*Ed.*)

During the period 1912-1914, a series of experiments were carried out at Knistad, in order to ascertain whether skim milk with sugared flour added to it can suitably replace full cream milk, so as to rear the calves with advantage until, in consequence of the improved quality of the meat and increased weight, they are better suited for the market. The food mixture is prepared as follows :

To 22 lb. of oat flour, mixed with wheat, rye or maize flour there is added 3.3 galls. of skim milk and 3.3 galls. of water. The whole is heated and when it begins to boil, the pan is taken off the fire and the contents allowed to cool to 60° C, after which very fine powdered sugar is added in the proportion of $^1/_{10}$ of the flour (in this case 2.2 lbs.) mixing thoroughly until the mass, which becomes thinner, is uniformly sweetened. Finally, 4.4 galls of skim milk are added.

During the experiments results clearly positive in character were obtained :

1) Skim milk with sugared flour added can take the place partly, and subsequently entirely, of full cream milk, without any disadvantage to the normal growth of the calf, the quality of the meat alone becoming slightly inferior.

2) The best results are obtained by mixing the flour with skim milk in the proportion of one lb. to 2 gallons of milk ; greater concentration produces digestive trouble

3) How far it is desirable to prolong this form of artificial feeding is a matter which of course varies from place to place according to the price of meat and the cost of the feed substances used.

Other experiments carried out at Biärka-Saby (Alberga) and at Geddeholm confirm the results already obtained at Knistad.

775 – **Experiments to ascertain whether the Ability to produce Milk-fat is transmitted by the Dam or the Sire.** — WOODWARD T. E., in *Hoard's Dairyman*, Vol. LI, No. 4, p. 146. Fort Atkinson, Wisc., February 18, 1916.

In carrying out the investigations to solve the above problem, the Advanced Registry of the American Guernsey Cattle Club was utilised.

The plan was to take the bulls having Advanced Registry daughters and pick out those daughters which had different Advanced Registry dams. If then a difference was found between the daughters it must be attributable to the dams, since the sire would remain the same in each case. When two daughters were found by the same bull, the higher and the lower producer were compared. When three daughters were found, the highest and lowest were compared and the third discarded ; and when four were found two comparisons were made possible. In every case an even number of daughters was used, except when two or more had the same dam, in which event the records of all out of the same dam were averaged and treated as only one animal.

A total of 384 daughters having tested dams was found, which allowed of 192 comparisons. In 110 cases out of 192 (57.3%) the high producing daughters were from dams with the higher records. The average fat production was as follows :

| | Pounds |
|---|---|
| 192 low producing daughters | 435.88 |
| 192 high producing daughters | 548.10 |
| Dams of low producing daughters | 473.50 |
| Dams of high producing daughters | 500.57 |

The influence of the dam on fat-production is evident. Compiling the data in another way, we have :

| | Pounds |
|---|---|
| 192 low producing dams | 428.07 |
| 192 high producing dams | 546.22 |
| Daughters of low producing dams | 482.86 |
| Daughters of high producing dams | 500.61 |

While there is a difference of 118 pounds of fat between the high and low producing dams, there is a difference of only 18 pounds between the daughters. This indicates that the sire also has something to do with the inheritance of dairy quality.

By dividing the dams into two groups, regardless of the bull to which they were bred, placing in one group all cows producing 500 lbs. or more and in the other all producing under 500 pounds, we have the following :

| | |
|---|---|
| Number of dams producing 500 pounds or more | 132 |
| Number of dams producing less than 500 pounds | 252 |

| | Lbs. fat |
|---|---|
| Average of high producing dams | 596.05 |
| Average of low producing dams | 428.53 |
| Average of daughters of high producing dams | 532.87 |
| Average of daughters of low producing dams | 470.18 |

All the methods of comparison strongly indicate that fat-producing ability is inherited from the dam as well as from the sire, and that the practice of retaining heifer calves from the best cows for replenishing and buiding up the herd is sound. The fact, sometimes observed, that with poorer quality cows and selected bulls high producing daughters have been obtained, must be chiefly considered as an exception which should not be made the basis in the selection of dairy cows for increased milk production.

776 – **List of Champion Cows of the 5 Principal Dairy Breeds of the United States in 1915.** — *Hoard's Dairyman*, Vol. II, No. 4, p. 143. Fort Atkinson, Wisc., February 18, 1916.

On the 1st January 1916 the cows in each breed yielding the highest semi-official yearly records in the United States, as communicated by the Secretariates of the several breeding associations, were as follows :

*Ayrshire.*

| Class | Name | Milk | Fat |
|---|---|---|---|
| | | lbs. | lbs. |
| 5 years old and over | Garclaugh May Mischief | 25,320 | 894.39 |
| | Lily of Willowmoor | 22,566 | 955.56 |
| 4 ½ to 5 years | Miss Nox 3d | 15,015 | 576.94 |
| 4 to 4 ½ years | Agnes Wallace of Maple Grove | 17,657 | 821.45 |
| 3 ½ to 4 years | Elizabeth of Juneau | 15,122 | 536.15 |
| | The Abbess of Torr | 14,582 | 646.72 |
| 3 to 3 ½ years | Ethel of South Farm | 15,050 | 586.20 |
| 2 ½ to 3 years | Henderson's Dairy Gem | 17,974 | 738.82 |
| 2 to 2 ½ years | Jean Armour 3d | 14,087 | 596.91 |

*Brown Swiss.*

| Class | Name | Milk | Fat |
|---|---|---|---|
| | | lbs. | lbs. |
| Mature | College Bravura 2nd | 16,461 | 798.16 |
| Five-year-old | Rosalind B. | 16,804 | 727.64 |
| Five-year-old | Ethel B. | 17,345 | 710.99 |
| Four-year-old | Merry of Allynhurst | 14,371 | 578.87 |
| Three-year-old | Hundry | 14,087 | 574.52 |
| Three-year-old | Ha B. | 15,603 | 548.02 |
| Two-year-old | Elsie of Lake View | 13,149 | 486.91 |

*Guernsey.*

| Class | Name | Milk | Fat |
|---|---|---|---|
| | | lbs. | lbs. |
| 5 years old and over | Murne Cowan | 24,008 | 1098.18 |
| 4 ½ to 5 years | Dairymaid of Pinehurst | 17,285 | 910.67 |
| 4 to 4 ½ years | Azucena's Price 2d | 16,204 | 855.76 |
| 3 ½ to 4 years | Dolly Dimple | 18,459 | 996.89 |
| 3 to 3 ½ years | Johanna Chene | 16,187 | 863.36 |
| 2 ½ to 3 years | Langwater Hope | 15,076 | 773.59 |
| 2 to 2 ½ years | Cherry of Edgewater | 13,454 | 732.97 |
| 2 to 2 ½ years | Marshall's Lady Dudley | 14,814 | 666.46 |

*Holstein-Friesian.*

| Class | Name | Milk | Fat |
|---|---|---|---|
| | | lbs. | lbs. |
| 5 years old and over | Duchess Skylark Ormsby | 27,761.7 | 1205.09 |
| 5 years old and over | Tilly Alcartra | 30,451.4 | 951.23 |
| 4 ½ to 5 years | Lucile Jolie Pontiac | 23,830.2 | 938.52 |
| 4 ½ to 5 years | Irma Gilt Edge Queen 2d | 26,745.3 | 758.88 |
| 4 to 4 ½ years | Daisy Grace De Kol | 21,718.3 | 962.80 |
| 4 to 4 ½ years | Queen of the Hengervelds | 23,788.1 | 702.46 |
| 3 ½ to 4 years | Duchess Hengerveld Korndyke | 22,897.0 | 993.38 |
| 3 ½ to 4 years | Friend Echo Elnora | 23,148.6 | 732.70 |
| 3 to 3 ½ years | Finderne Holingen Fayne | 24,012.8 | 1110.05 |
| 2 ½ to 3 years | K. P. Manor Kate | 22,106.4 | 818.73 |
| 2 to 2 ½ years | Finderne Mutual Fayne | 22,159.4 | 900.51 |
| 2 to 2 ½ years | Elmside Nudine Segis Johanna | 22,802.[illegible] | 706.40 |
| Under 2 years | Wooderest Colantha Pietje | 20,856.7 | 636.02 |

*Jersey.*

| Class | Name | Milk lbs. | Fat lbs. |
|---|---|---|---|
| 5 years old and over | Sophie 10th of Hood Farm | 17,557.7 | 991.1 |
| 5 years old and over | Passport | 19,604.8 | 839.3 |
| 4 1/2 to 5 years | Olympia's Fern | 16,147.8 | 937.8 |
| 4 to 4 1/2 years | Lass 64th of Hood Farm | 13,444.6 | 817.8 |
| 4 to 4 1/2 years | Flying Fox's Maid | 14,315.6 | 785.9 |
| 3 1/2 to 4 years | Lass 66th of Hood Farm | 17,703.8 | 910.6 |
| 3 to 3 1/2 years | Lass 74th of Hood Farm | 13,713.0 | 747.6 |
| 3 to 3 1/2 years | Lucky Farce | 14,184.8 | 708.5 |
| 2 1/2 to 3 years | Lad's Lady Riotress Irene | 12,307.8 | 660.8 |
| 2 to 2 1/2 years | Pearly's Exile of St. Lambert | 12,345.5 | 816.1 |
| 2 to 2 1/2 years | Lass 66th of Hood Farm | 14,513.1 | 720.5 |
| Under 2 years | Lucky Farce | 14,260 | 635.8 |

PIGS

777 – **The Guernsey Breed of Cattle in Italy.** — BARTOLUCCI A., in *L'industria lattiera e zootecnica*, XIVth Year, No. 5, pp. 68-69 No. 8, pp. 117-119; 7 fig. Reggio d'Emilia, March 1st and April 15, 1916.

One of the first attempts at introduction and acclimatisation of the Guernsey breed in Italy was made by COUNT SENNI at Grottaferrata, province of Rome, on a farm rich in forage and possessing byres containing all up to date improvements. The imported specimens, male and female, as well as the pure products, have retained all the original characteristics, as well as capacity for milk production, the organoleptic characters, and the composition of the milk and butter. The pure progeny have been selected and crossed with cows of the Lombard, Brown Swiss and Dutch type. It has thus been possible to prove the preponderant character of the Guernsey bull in transmission by inheritance. In all the cases, the milk production of the females obtained from these crosses was larger and better than that of their dams.

778 – **Experiments in Pig Feeding with Potato Peel.** — ZUNTZ and VON DER HEIDE, in *Deutsche landwirtschaftliche Presse*, 43rd Year, No. 31, p. 276. Berlin, April 15, 1916.

The Authors carried out 2 experiments at the Physiological Institute of the University of Berlin in feeding pigs with potato peel in the form of Berlin kitchen refuse.

In the first experiment, this peel, well dried, then coarsely ground, was administered with a basal ration to 3 pigs. It was found that pigs of a weight of 66 to 88 lbs can easily take 1.1 lbs. of dried peel per day per head.

A second experiment, in which 1 pig received 1.1 lbs. of potato peel and 0.22 lbs. of desiccated full cream milk per day, and was put into a respiration chamber, showed that the crude cellulose of the peel is much less digestible than that of the whole potato, which is quite intelligible. This matters little, however, because the content of crude cellulose is small relatively to the other nutritive elements, and the content of non-nitrogenous extract is almost equal to that of whole dried potatoes. The crude protein is difficult to digest, but the figures of digestibility are not much below those found by KELLNER for dried potatoes.

In conclusion, the food value of the peel equals 80.6 % of the potato substance. The disadvantage of the peel is that the animal will not take it in large quantities for a sufficiently long period, the result being that few proteins are formed in their bodies.

779 – **Experiments in Feeding Pigs with Straw Meal and Straw rendered Soluble by Caustic Soda.** — SCHNEIDEWIND, in *Landwirtschaftliche Wochenschrift für die Provinz Sachsen*, 18th Year, No. 7, pp. 57-59. Halle a. S. February 12, 1996.

The straw made soluble by a solution of caustic soda used in this experiment, first manufactured in Germany by OEXMANN and sold under the name of "Zellulosefutter" (cellulose forage), generally contains 65 % of pure ligneous substance, 20 % of dried potato, and 15 % of molasses. The straw meal, finely ground cost 12 s. per cwt. The two forages were compared with sliced potatoes.

The test animals were 12 growing pigs divided into 4 equal groups, each fed as follows :

| | |
|---|---|
| *Group I* | Crushed barley, first 2.2 lbs.; afterwards 3.3 lbs.<br>Boiled potatoes 10.8 lbs.<br>Fish meal, 1.5 lbs. |
| *Group II* | Crushed barley, first 2.2 lbs.; afterwards 4.4. lbs.<br>Sliced potatoes, 6.6. lbs. |
| *Group III* | Crushed barley, first 2.2 lbs; afterwards 4.4. lbs.<br>Cellulose forage, 6.6. lbs. |
| *Group IV* | Crushed barley, first 2.2. lbs; afterwards 4.4 lbs.<br>Straw meal, 6.6 lbs. |

The supplementary forage was properly mixed with basal forage.

The experiment proper, which was preceded by a preparatory period, lasted 61 days and took a normal course. During this period it was observed that the pigs of Group IV (receiving straw meal) did not take to their ration willingly. On completion of the experiment, these animals were found to be more poorly constituted.

The following was the daily increase of weight per animal in the different groups :

| | | |
|---|---|---|
| *Group I* | (without supplementary forage) . . . . . | 0.86 lb. |
| *Group II* | (with sliced potatoes) . . . . . | 1.1 " |
| *Group III* | (with cellulose forage) . . . . . | 0.90 " |
| *Group IV* | (with straw meal) . . . . . | 0.44 " |

The Writer concludes that the productive value of cellulose forage is equal to about 50 % of the value of sliced potatoes, and that straw meal is valueless as food for pigs.

780 – **Value of Lucerne and other Green Forage in Pig Feeding.** — NILS STANSSON in *Kungl. Landtbruks-Akademiens Standlingar och Tidskrift*, Year XLV, Nos. 1-2 pp. 30-50. Stockholm, 1916.

Researches were conducted at the Central Livestock Breeding Station at Stockholm with the object of ascertaining to what extent green forage can be used in feeding young pigs. The animals experimented on were

subdivided into two groups ; (A) Control group with rations of milk serum, skim milk and barley ; (B) Test group in which the serum, milk or barley are in part or in different proportions replaced by lucerne, vetches or green clover. The results may be summed up as follows :

1) Green forage may form part of the daily ration to the extent of 10 % of the total weight without the growth of the animals suffering in any way.

The nutritive value of fresh hay depends on the weather and is generally higher in summer than in winter crops.

2) Lucerne and clover have nearly the same value, so that 2.2 lbs. of barley may be replaced by 15.4 to 16.5 lbs. of lucerne or clover. Vetches, owing to the lower percentage of dry substance, are much below the other two pulses ; 19.8 to 22 lbs. of vetches correspond to 2.2 lbs. of barley.

3) Steeping and cooking the forage have no marked influence on the daily growth of the animals, as appears from the following table :

| | With fresh forage | With wet forage | With cooked forage |
|---|---|---|---|
| Lucerne | 1.040 lbs | 1.058 lbs | — lbs |
| Vetches | 0.968 | 0.805 | 0.904 |
| " | 0.968 | 1.060 | — |
| Clover | 1.273 | 1.284 | 1.273 |
| " | 1.205 | 1.157 | — |
| Average of 5 experiments | 0.091 | 1.065 | — |
| " " 2 " | 0.122 | 1.045 | 1.086 |

Finally it was remarked that the dead weight is greater in the pigs of the test group partly fed with green forage.

| | Percentage of loss of weight in killing | |
|---|---|---|
| | In the test group | In the control group |
| Lucerne-Serum | 26.3 | 25.2 |
| » Skim milk | 26.3 | 24.2 |
| » Barley | 27.7 | 25.7 |
| Vetches-Serum | 23.8 | 21.8 |
| Clover-Serum | 23.2 | 28.8 |
| » Lucerne | 25.5 | 23.7 |

POULTRY

781 — **Experiments on the Necessity of adding Gravel to Poultry Food.** — BÜZÁS GY., in *Baromfitenyesztok* (Poultry Keepers), Year XI, No. 6, pp. 68-70 Budapest, April 1916.

In order to ascertain whether there is any advantage in adding small gravel to the food of fattening chickens, as is done by most Hungarian poultry preeders, MR. A. ZAITSCHEK, Chief Royal Chemist, undertook a series of experiments. Their object was, at the same time, to gain further knowledge about the gizzard of graminiverous birds, and ascertain whether the small gravel always found in the gizzard of poultry is an indispensable mechanical factor in digestion.

The tests covered 3 groups of 6 chickens, kept from the 14th September to the 28th November on a diet of maize, partly whole, partly ground. While group II was given carefully screened maize free from all gravel, group I

was also given a weighed quantity of gravel, in portions renewed as and when the birds consumed the contents of their trough, so that during the entire experiment each chicken of group I swallowed about 600 grams of gravel. The weight of the gravel varied from 0.14 to 0.24 gr. per grain; the width from 1.2 to 7 mm. and the length from 1 to 10.5 mm. To get rid of soluble parts the gravel was first scorched in a flame, then, before administration, was boiled in dilute hydrochloric acid, and afterwards in water. The average daily ration given per individual was almost equal in both groups: in group I, each subject consumed 73.4 gr. of maize, and in group II, 72.4 g. In the course of the experiments the chickens were often weighed (the results are indicated in 2 tables). In both groups there were birds whose weight increased during the 2 ½ months of experiment, and others whose weight diminished. The latter were the majority, so that at the end of the experiment the weight of the birds of the 1st group showed a reduction of 314 grams (averaging 52.3 per individual), and that of the 6 birds of group II a reduction of 597 gr. (99.5 gr. average per individual).

Allowing for the daily ration of group II, which was 1 gram less, it may be concluded from the above results that the 2 groups assimilated their food in an equal degree, so that from the point of view of grain utilisation it is quite immaterial whether it is administed with or without gravel. In the average change of live weight there was a very small difference between the 2 groups, and it was concluded that the live weight of the birds fed with maize with or without gravel varied uniformly.

At the end of the experiment, the gizzards of the birds of each of the 2 groups were examined, and gravel was found which was carefully cleaned and then weighed. The gizzards of the birds of group I contained on the average 13 grams of such gravel, while in these of group II there was an average of 6 gr. As however the chickens of group II received no gravel during the test, it is evident that they kept it in the gizzard for about 2 ½ months, which suggests that they use it for grinding the grain swallowed, and that the anatomical construction of the gizzard is such as to render the expulsion of the gravel difficult. (RÉAUMUR had already recognised the necessity for the presence of gravel in the gizzard of graminivorous birds).

The 2 757 grains of gravel found in group I weighed together 52.7 gr. (0.019 gr. per grain); in group II, 667 grains weighed together 29.5 gr. (0.44 gr. per grain), which shows that the birds of group II kept bigger grains of gravel. There were also differences in the shape of the gravel; that of group II was rounder and smoother, which must be attributed to the continuous friction in the gizzard. Finally, the grains of gravel weighing 13 grams found in group I prove that the greater part of the gravel was evacuated with the excrement, as the birds of this group had still received 60 grams of gravel on the average, 10 days before being killed.

It follows from these observations that gravel may be dispensed with during the short period of fattening of chickens (intensive fattening lasts 15 days at most), because in the gizzard of poultry there is always the necessary quantity of gravel for grinding the grain. It still remains to be ascertained, however, whether digestion takes place perfectly in case of com-

plete absence of gravel. To clear up this question it would be necessary to prevent newly hatched chicks from swallowing gravel. The fact that the hen brings gravel to the chicks with the very first food containing grain seems to confirm the opinion that gravel is indispensable for mechanical digestion.

BEES

782 – **Cold as the Cause of the Death of Bees in a Colony Wintering under Good Conditions** (1). — ASTOR A., in *L'Apiculture*, Year 60, No. 3-4, pp. 28-31. Paris, March-April 1916.

In all hives, even those wintering under good conditions, both from the point of view of population and food supply, ventilation, etc., a number of bees always die during winter confinement. This number varies according to the size of the colony, the number of old bees in the autumn, etc., ranging usually from one hundred to one thousand per hive. The writer has found that cold is the cause of the death of the bees. He picked up every morning the bees which had fallen lifeless on the floor of the hive. These apparently dead bees, which if left alone would no doubt die shortly, were put in a queen bee cage made of metal gauze, and gently warmed. The majority of them were restored to life by the warming only, regaining their full vigour and liveliness.

The computation of the bees falling lifeless every day and those restored by warming, and dead bees leads to the following conclusions :

The number of lifeless bees taken from the floor of the hive and the percentage of dead bees relatively to those lifeless in appearance is larger in proportion as the temperature is lower, and vice-versa.

At least 80 % of the bees which perish during the winter in a colony wintering under good conditions are killed by cold.

PISCICULTURE

783 - **A New Skin Disease in Carp in Germany.** — PLEHN M., in *Allgemeine Fischerei-Zeitung*, Year 1915, No. 12, pp. 179-180. Munich, 1915.

A description is given of a skin disease, hitherto unknown, which caused great damage in 1915 in fish ponds in Germany. The first symptoms are one or more characteristic dark spots on the skin, which gradually spread and finally reach the size of a 5 shilling piece. The colour sometimes disappears, but mostly a hole forms in the middle of the spot ; it is shallow, being limited to the subcutaneous layer, which then gives it a fine white colour. The white hole is surrounded by a darker zone which gradually grows fainter. These are the typical symptoms of the disease.

Cases are also observed in which the subcutaneous layer is attacked; it comes away in pieces which float in the water. Below the subcutaneous part attacked, a hole forms in the flesh, the dark colour of the zone loses its intensity, and finally a characteristic abscess forms.

The diseased skin contains enormous quantities of bacteria, and it is beyond doubt that one of these bacteria is the pathogenic agent in the disease. It was however impossible to find the presumed pathogenic agent, and the Writer asks all fish breeders and investigators to communicate to him in detail their observations on the disease.

(1) See *B.* 1915, No. 209. (*Ed.*)

The disease often causes the death of the fish, but only when the latter is greatly enfeebled. In some cases recovery may take place.

The dead fish being entirely invaded with bacteria, it was not possible to ascertain where they enter.

The study of the disease is being continued.

## FARM ENGINEERING.

784 – **Strecker's Liquid-manure Drill.** — STRECKER, in *Deutsche Landwirtschaftliche Presse*, 43rd Year, No. 33, p. 293 ; No. 34, p. 304 + Fig. Berlin, April 22 and 26, 1916.

AGRICULTURAL MACHINERY AND IMPLEMENTS

A series of definite principles have been devised in connection with the preparation, storage and use of liquid manure but up to the present there has been no suitable apparatus for *putting it into the soil* in accordance with these principles. It is requisite that the liquid manure should not leave the distributing cask or barrel in a large jet which comes into contact with the air before reaching the soil ; it must be introduced direct into the soil, and protected against air. This condition is complied with by the " Jauche-drill " (liquid manure drill) of Professor STRECKER, of which the appended figure represents a general view.

After trying all sorts of contrivances, the inventor at last satisfied himself that the best method of preventing access of air consists in the use of steel discs (*g*) similar to those of mechanical seed drills. Small pointed drill shares, with guide roller and adjusting bar gear, precede the discs, cutting into the soil so that the discs can afterwards pass in the purin and cover it up with earth at once. The result is that the purin flowing in a big jet into the " Schartrichter " (funnelshare) *m* (fig. 2) at once disappears completely in the soil and cannot evaporate in the air. For light soils a share consisting of the funnel *x* and the slide *y* (fig. 3) is sufficient.

The inventor adjusts the apparatus according to the quantity of liquid manure by means of adjustment rings (fig. 4), the aperture of which is made to correspond with the opening 7 (fig. 5).

To enable the device to work on a slope, the distributing pipe 3 is suspended pendulum-wise to the chain 12, and therefore always remains horizontal.

In order to adapt the distributing mechanism to different crops the method is the same as with a seed drill : the lever-stirrups *e* on the lever-carrying bar *d* are moved more or less apart according to the space between the rows.

The liquid manure emerging from the barrel through the tap 1 flows through a flexible tube into the distribution pipe 3, from which it passes down through the socket pipes 11 (figs. 2 and 3) into the funnels *m* closing with airtight lids *n*, and afterawrds between the steel discs, thus getting to a depth of about 6 cm in the soil where it is immediately covered with earth.

This easily handled appliance is made in different sizes for operation by hand or by horses.

STRECKER'S *Liquid-manure Drill.*

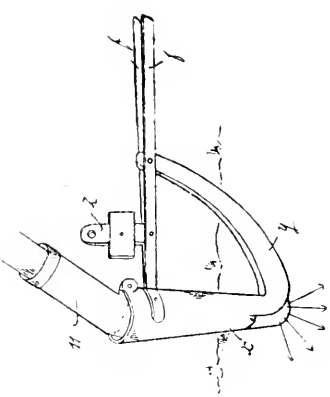

*Fig. 3*

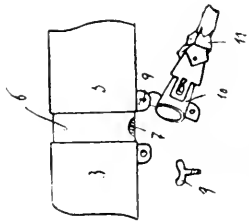

*Fig. 5*

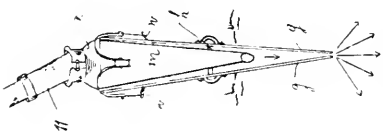

*Fig. 2*

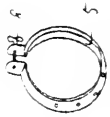

*Fig. 4*

500 Lb.

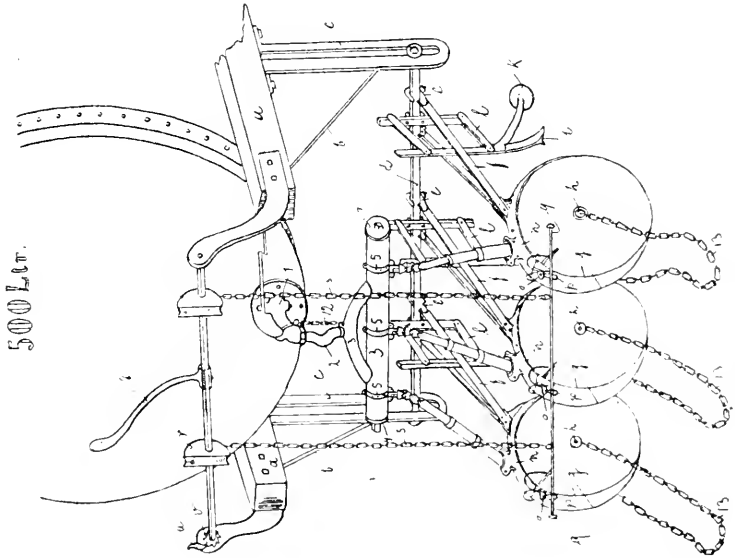

*Fig. 1*

785 – **Vasino Winnowing Machine.** — TARCHETTI A. in *Giornale di Risicoltura*. VIth Year, No. 8, pp. 136-142, fig. Vercelli, April 30, 1916.

This simple appliance possesses the following advantages over ordinary winnowers :

1) It only runs at a given speed, which prevents excessive increase of the quantity fed in, and hasty and bad work.

2) The product leaving the machine is put up automatically in a very easy way into bags at the rear end.

3) The machine is fully equal to other winnowers in yield, but furnishes a much cleaner product with better separation of the screenings.

*Winnowing Machine* VASINO.

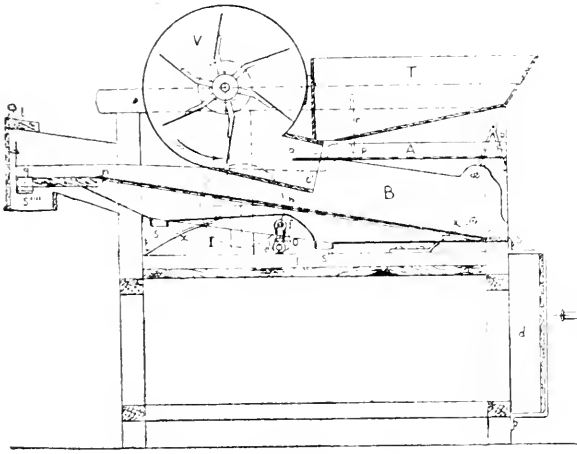


Fig. 1 : Longitudinal Section.

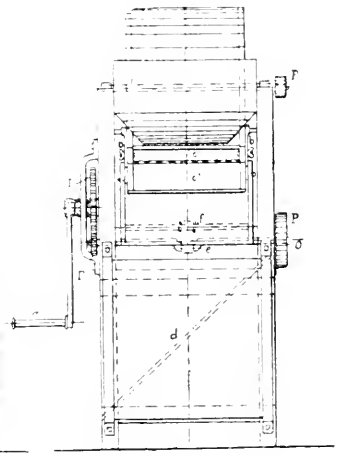


Fig. 2 : Transverse Section.

4) It can be used both for paddy and other cereals without distinction, it being only necessary to change the screens and the direction of the air current.

5) It consumes less driving power ; a boy can work it for a long time.

As shown by the 2 figures appended, this machine (which Messrs VASINO afterwards improved in its details) consists essentially of the following parts : a wooden frame, a fan V, a feed hopper T, and two screens, A and B.

The machine is hand-driven by means of the crank *m*, the movement of which is transmitted through the gearings I and I', to the shaft *o*, which in turn transmits it to the screens through the elbow-joint and the connecting rod *e f* ; and to the fan through the pulleys P, P' and the belt.

The material contained in the hopper T falls on the 1st screen A, which is a cast iron plate, suspended to the frame by the springs *r* and the 2 arm levers *h*, one being short for the purpose of regulating the screen angle, and

the other long and connected to the edges B of the lower screen, which imparts a rocking movement to it. The screen A is not perforated at its end *p p'* lying below the discharge aperture of the hopper, so that the material from the latter has to pass over to *p'* before dropping through to the bottom screen. Through a regulator placed against the vertical wall of the hopper, and by which the fan box may be turned, the fan outlet aperture may be raised or lowered so as to enlarge either the part *c* which blows *on to* the screen A, or the part *c'* which blows *below* the same screen. From *p'* to *s* the latter is perforated, not by punched holess, but by small arched notches with convex edge bent downwards spoonwise, so as to facilitate the entry of the current of air from below upwards and the descent of the small grain and seeds, while the large grains fall from *s* into the inclined plane *d* and the small straw, empty grains, etc., are expelled from the machine by the air current.

During the drop from A to B, the grains are struck by the air current *c'* and compelled to follow an inclined path which brings them near the end *n''* of the lower screen. The latter is supported laterally by the wooden edges B to which is fixed the shaft *f* receiving the movement of the 4 springs *x* and *x'* supporting the screen as a whole. The result is that the latter, which under the action of the connecting rod *e f* tended to perform a perfectly vertical alternating movement, is compelled on the contrary to shift along 2 arcs of a circle with radii which are respectively equal in the lower part to the lever arm *x'* and in the upper part to the lever arm *x*. In consequence of the impetus thus given by the screen to the grains covering it, the latter are thrown upwards, and in accordance with the law of uniformly varied movement, they describe a parabolic path, falling on the screen at a point farther up. They thus make small successive intermittent advances, passing up along the screen until they pass through the meshes or fall at $s^{IV}$, where they are collected.

The screen is generally made of sheet iron perforated on the space *n' n''* with small holes for separating the earth and small seeds ; on the space *n n'* with larger holes separating the bad seeds; a sheet-iron apron with a double slope placed below collects the screenings of *s''* and s''', while the stones, which cannot rise owing to their weight, fall from *s'* into the inclined plane *d*. In the aperture *q* through which the cereal descends there is an inclined plane *q* $s^{IV}$ which, by means of the lever 1 may be inclined right or left and thus feed the cereal into either of the 2 sacking inlets with which the appliance is fitted, so as to allow of continuous fall of the cereal during the connecting up and taking away of the sacks.

Thus the speed of conveyance of the cereal does not only depend on the lever arm *o e* of the elbow-joint, but also on the mutual position and the length of the screens *x* and *x'*, and still more on the rapidity of alternative movement. The effective conveyance momentum acquired by each grain weighing *p* must not only be capable of overcoming the frictional resistance against the screen and raising the grain, but also of enabling it to describe such a path that when it falls back into the screen it cannot descend again,

owing to the lowering and slope of the screen and the vibration of the apparatus, to the point from which it was raised.

Thus speed plays an essential part in the output of the apparatus and it cannot go below a certain limit, otherwise the apparatus will not work and the grains tend to descend towards the end *s'*.

786 – **The Vasino Paddy Cleaning Machine, fitted to a Threshing Machine.** — TARCHETTI A. in *Il Giornale di Risicoltura*, VIth Year, No. 9, pp. 151-154, 1 fig. Vercelli, May 15, 1916.

As shown by the appended figure, the paddy cleaning machine designed by Messrs. VASINO BROTHERS (at Ponzana, province of Novara) can be fitted beneath an ordinary machine for threshing this cereal.

The cleaning apparatus is entirely suspended by wooden supports to the lower cross-members of the framework of the thresher. It may receive the reciprocating screening movement either by means of the lever *P P* actuated by an eccentric mounted on the shaft of the 1st beater (the whole shown in dotted lines on the figure), or still better by means of a special countershaft *L*, fitted with an eccentric or elbow-joint and driven by a belt.

The cleaning apparatus does not gather everything that falls from the gratings of the thresher, but only the material from the 1st shaker and the 2nd beater, because generally the products of the 1st beater do not need cleaning, while those of the last shakers are so full of impurities, and at the same time so small, that it is desirable to blow them separately by hand.

The threshing product falls on an inclined plane (which MESSRS VASINO have divided with advantage into several parts: *A*, *A'*, *A''*, to save space in height), which conveys it to the 1st screen B. The latter may be of perforated sheet iron, but the inventors prefer plates with *oblique* holes (shown in a vertical section on the principal figure, and in plan on the small figure annexed) in order the better to prevent leaves, stalk fragments, glumes, etc. from passing into the lower part.

The nozzle of the fan divides into 2 branches, *M* and *N*, at the entrance to which is a slide valve by which the current of air in both may be regulated.

The air emerging from *M* strikes the grain falling from the sieve *B* and separates the small straw, empty grains, light seeds and dust, ejecting them from the machine together with the leaves etc. falling from the end of *B*.

The heavy grains drop on the 2nd screen, which has a solid part *C* and the rest punched out like the 1st screen, but with smaller holes, with a reverse direction of slope at *D*.

The stones and other large impurities gather in the channel *E*, from which they are expelled at one side of the machine.

The paddy falls into the plane *C'*, then on to *F*, and *G*, and into the channel *H*, which discharges it on the other side of the cleaner. In falling from *F* to *G*, however, the paddy is subjected to the air current of the channel *N*, which, striking against *G*, forms an eddy holding the screens suspended for some moments and freeing them from the last impurities.

This cleaner, both simple and efficient, does not take up much space, requires little driving power and can be fitted to any threshing machine.

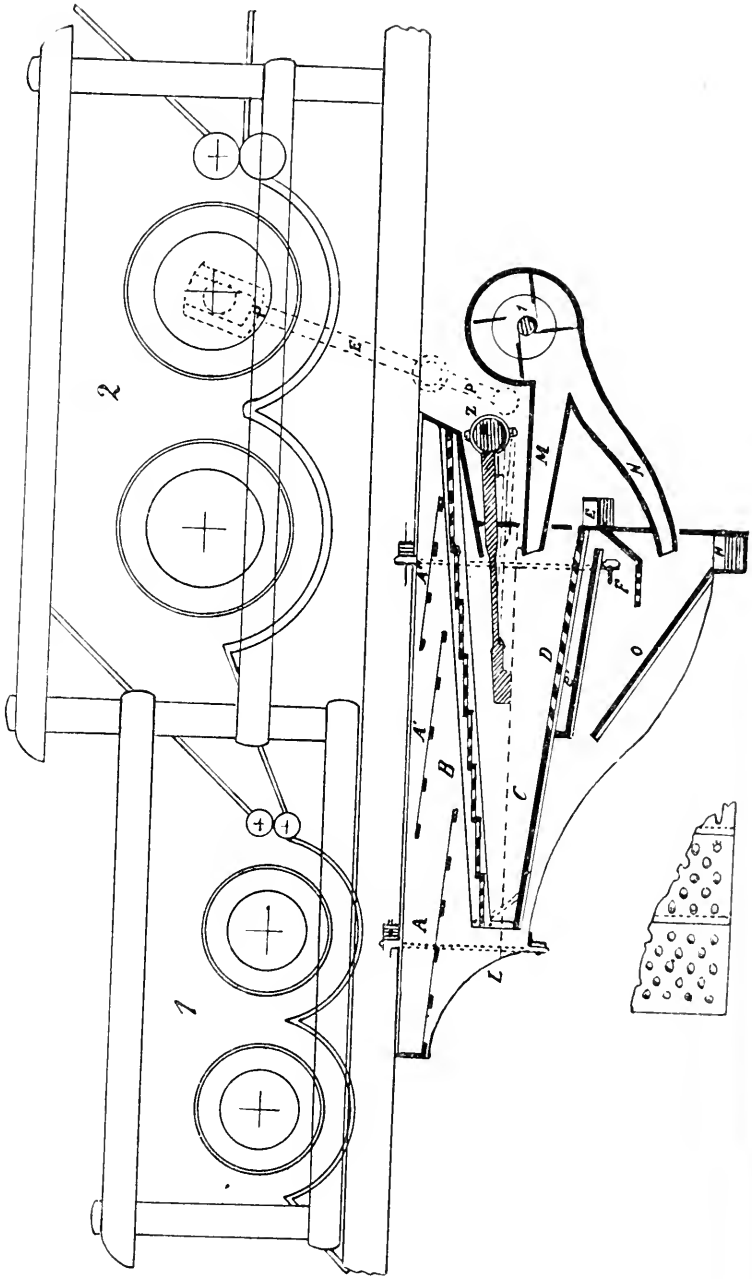


VASINO *Cleaner fitted beneath Threshing Machine.*

787 – **Motor-Driven Apple Grading Machine of High Capacity** (1). — *The Scientific American*, Vol. CXIV, No. 15, p. 385. New York, April 8, 1916.

The new apple-grading machine shown in the accompanying figure is operated by motor power and has a capacity varying from 40 to 60 barrels per hour. The apples can be graded in seven different sizes from 2 ¼ inches up to 4 ½ in. in diameter, each size varying one quarter of an inch. The principle on which the grader is designed and constructed is very

Mechanical Apple Grader.

simple. It is an endless belt with plates forming hollow squares which change their size as they travel towards the end of the grader. The variation in the size of the squares is accomplished by the spreading of he belts.

788 – **A Tractor for the Garden.** — *Farm Implement News*, Vol. XXXVII, No. 17, p. 53. Chicago, Ill., April 27, 1916.

The accompanying illustration shows the garden tractor constructed by the Beeman Garden Tractor Company of Minneapolis, Minn. U. S. It develops nearly three horse-power, the pull on the drawbar being a little

(1) See also *B.* June 1914, No. 560. (*Ed.*).

less than one horse-power. It weighs 450 pounds and has wheels 25 inches high with 3 ½ inch tires. The height of the handles can be adjusted to suit the operator. It will cultivate anything that grows in rows.

Any kind of garden hoes, cultivator teeth, knives or disks can be quickly attached and a boy or girl can operate the machine for it needs only to

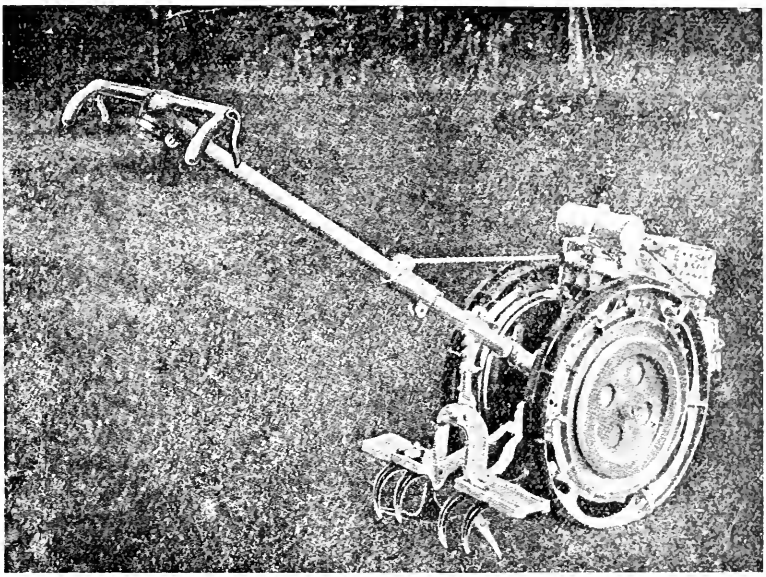

The Beeman garden Tractor.

be steered. By going astride the row this tractor cultivates all vegetables grown in narrow rows such as onions, beets, carrots and by going between the rows it will cultivate maize, potatoes, peas etc.

This tractor can also be used for driving other small machines such as pumps, churns, cream separators, wood-saws and the like.

789 – **Experiments on the Fuel used in Farm Portable Engines.** – *Revue de Tunis, Direction générale de l'Agriculture, du Commerce et de la Colonisation, Bulletin*, Year 20, No. 87. pp. 49-55. Tunis, March, April 1916.

The present high prices of coals have induced many farmers in Tunis to use other fuels for their steam engines. The wood of olive trees, lentisks and thuyas are those most frequently burned.

The Direction Générale de l'Agriculture has recently caused experiments to be carried out in order to determine the best means of utilizing Tunisian fuels and their value in comparison with that of coal briquettes.

A 24 HP. portable engine driving a straw baling press turning out 40 to 50 bales per hour was used for these experiments, in each of which the pressure was first brought up to 64 lbs. by burning only the strictly

necessary quantity of fuel, then the press was started, the pressure raised to 85 lbs and kept there while the machines worked steadily for some hours after which the experiment was stopped at the initial pressure of 64 lbs. and with the same water level in the boiler.

Careful record was kept of the weight of fuel consumed, work done, time employed etc., and these data are given in the annexed table.

| Fuel | Amount required to raise pressure to 64 lb. | Consumption whilst working | | | | Material pressed |
|---|---|---|---|---|---|---|
| | | per hour | per 100 bales | per 1000 lbs. | ratio to coals | |
| | lbs | lbs | lbs | lbs | | |
| Coal briquettes | 79.2 | 39.6 | 99.0 | 13.2 | 1 : 1 | straw |
| | 79.2 | 31.5 | 110.0 | 13.2 | 1 : 1 | fodder |
| Tunis lignite from Cape Bon | 81.4 | 54.8 | 136.4 | 18.3 | 1.39 : 1 | straw |
| Wood from old olive trunks, recently felled | 165.0 | 110.0 | 275.0 | 36.8 | 2.79 : 1 | straw |
| Eucalyptus, branches and stems 2 to 10 inches diameter, felled two months previously | 162.8 | 107.8 | 253.0 | 33.8 | 2.56 : 1 | straw |
| Thuya, trunks recently felled | 180.4 | 115.3 | 288.2 | 38.5 | 2.91 : 1 | straw |
| Thuya, stumps recently felled | — | 90.6 | 275.0 | 36.8 | 2.79 : 1 | straw |
| Aleppo pine, trunks and branches, quite green | 154.0 | 110.0 | 250.8 | 33.5 | 2.54 : 1 | straw |
| Lentisk, small branches few centimetres in diam., nearly dry. | — | 84.5 | 264.0 | 31.6 | 2.39 : 1 | fodder |
| Lentisk, stumps felled some months previously | 132.0 | 116.2 | 253.0 | 33.8 | 2.56 : 1 | straw |
| Carob tree, split wood and branches recently felled | 132.0 | 117.7 | 292.6 | 35.0 | 2.65 : 1 | fodder |
| Cork-oak, split wood, nearly dry. | 125.4 | 92.0 | 275.0 | 33.2 | 2.52 : 1 | fodder |

## 790 – Review of Patents.

*Tilling machines and implements.*

Canada 167 801. Plough.
Cuba 2 452. Improvements in cultivators.
Denmark 21 099. Cultivator.
21 123 — 21 142. Ditching machines.
United-Kingdom 24 471. Subsoiler.
408. Power driven ploughs, cultivators etc.
802. Motor ploughs.
United-States 1 176 047 — 1 176 334 — 1 177 883 — 1 178 515 — 1 179 295. Harrows.
1 176 098. Soil pulverizer.
1 176 240. Roller attachment for gang ploughs.

1 176 514. Weed cutting attachment for disk-harrows.
1 176 581 — 1 178 765. Disk ploughs.
1 176 626. Combined roller and stalk cutter.
1 176 883. Combined weeder and cultivator.
1 176 892. — 1 177 649 — 1 178 660 — 1 178 607. Ploughs.
1 176 955. Attachment for cotton choppers.
1 177 175. Insect trapping attachment for cultivators.
1 177 389 — 1 178 025 — 1 180 178. Cultivators.
1 177 558 — 1 177 871. Gang ploughs.
1 177 974. Weeder.
1 178 212 — 1 180 477. Motor ploughs.
1 178 767. Ridge levelling harrow.
1 179 183. Tractor plough.
1 179 241. Plough beam.
1 179 315. Plant hill marker.
1 179 899. Deep-tilling gang plough.
1 180 195. Adjustable draught attachment for ploughs.
1 180 456. Coulter brace.
1 180 563. Clamps for cultivator standards.
1 180 580. Coulter.
1 180 845. Disk harrow.

*Manure distributors.*

Canada 167 719. Fertilizer distributor.
United States 1 177 391 — 1 178 137. Manure spreaders.
1 180 988. Straw and manure spreader.

*Drills and sowing machines.*

Canada 167 950. Sowing machine.
United-Kingdom 1 481. Machine for sowing seeds one at a time or for planting potatoes.
United States 1 176 222. Seed planter.
1 176 242. Corn planter.
1 176 324. Beet planter.
1 176 820 — 1 176 821. Variable drop seed planters.
1 176 906. Grain drill attachment for coulters.
1 178 263. Potato planter.
1 178 311. Seeder attachment for cultivators.
1 178 506. Combined planting and fertilizer distributing machine.
1 178 571. Grain feeding device.
1 178 760 — 1 180 759. Planters.
1 179 285. Cotton planter.
1 179 579. Covering attachment for seed planters.

*Reapers, mowers and other harvesting machines.*

Canada 167 260. Finger attachment for harvesters.
167 571. Sheaf loader.
167 786. Machine for pulling flax.
France 479 594. Hand rake for forage crops.
Switzerland 72 457. Mowers.
72 597. Hay harvesting machine.
United States 1 176 276. Corn harvesting and shocking machine.
1 176 361. Binder.
1 176 398 — 1 178 013 — 1 179 290 — 1 179 410. Corn harvesters.

1 176 547. Grain shocking machine.
1 176 585. Machine for making shocks.
1 177 104 — 1 178 634. Harvesting machines.
1 177 158. Cow-pea cutter.
1 177 475. Bean harvester.
1 178 419. Grain binder.
1 178 524 — 1 179 702. Mowers.
1 178 590. Brake for header harvesting machine.
1 179 310. Mower attachment.
1 179 320. Unloader and stacker for wheat and the like.
1 179 676. Hay rake attachment.
1 179 997. Self binding harvester.
1 180 257. Binder carrying device.
1 180 548. Corn stripper.
1 180 700. Combined hay stacker and rake.
1 180 944. Pea thresher and harvester.
1 181 094. Attachment for binders, harvesters and the like.
1 181 006. Hay rake and loader.

*Machines for lifting root crops.*

Denmark. 21 093. Machine for lifting, topping and heaping root crops.
United-Kingdom 386. Topping and tailing machine for root crops.
975. Potato digger.
United States 1 176 104. Beet digging machine.
1 176 850. Sugar beet topper and puller.
1 179 580. Potato digging machine.
1 179 767. Beet harvester.
1 180 251. Potato digger.

*Threshing and winnowing machines.*

Canada 167 193. Grain separator.
United States 1 176 360. Corn husker.
1 176 488 — 1 179 806 — 1 180 443. Threshing machines.
1 177 049. Double delivering mechanism for threshing machines.
1 177 703. Combined wild-oat separator and grain separator and cleaner.
1 178 295. Grain separator.
1 179 254. Seed separating mechanism.
1 179 438. Corn husking machine.
1 180 165. Seed grader.

*Machines and implements for the preparation and storage of grain, fodder, etc.*

Denmark 21 143. Device in straw presses with sliding ram.
United-Kingdom 1 161. Apparatus for washing grain.

*Dairying machine and implements.*

Canada 167 953. Cream separator.
Denmark 21 106. Improvement of parts of milking machines.

*Other agricultural machines and implements.*

British India 2 225. Improvement in devices for controlling supply of water for irrigation purposes.
Canada 167 539. Straw rope twister.
167 632. Hide removing instrument.

| | |
|---|---|
| Cuba | 2 453. Improvement in sugar mills. |
| | 2 458. Improvement in machines for stripping sugarcane leaves. |
| | 2 466. Filter-press. |
| Denmark | 21 127. Plant thinning machine. |
| | 21 128. Device for the cooling of preserve glasses and jars. |
| | 21 155. Link for iron tether. |
| France | 179 538. Sprayer utilizing bicycle pumps as source of pressure. |
| United-Kingdom | 193. Foster mother for chickens. |
| | 787. Machine for preparing fibres for spinning. |
| | 789. Tea rolling machine. |
| | 1 255. Machine for thinning root crops. |
| | 1 323. Insect traps. |
| United States | 1 176 182 — 1 178 552 — 1 178 093 — 1 180 062. Traction engines. |
| | 1 177 497. Calf weaner. |
| | 1 177 783 — 1 178 761 — 1 178 838 — 1 179 066 — 1 179 900 — 1 180 476 Tractors. |
| | 1 178 782. Corn topper. |

BUILDING CONSTRUCTION

791 – **Inverted Siphons Replace Bridges where Canals Cross Roads.** — *The Engineering Record*, Vol. 73, No. 15, p. 478. New York, April 8, 1916.

The extensive system of main irrigation canals and laterals in the Imperial Valley California has presented in many places the problem of getting the highways across the canals without interfering with the function of either. Bridges were built across the larger canals but as the channels are above ground level, heavy gradients were required for the approaches.

It was formerly believed that inverted siphons would not be feasible on account of the quantities of silt carried by the irrigation water and which it was feared would fill up an under-ground conduit. Experiment, however, has proved that velocities of 2ft. per second would keep the corrugated pipe siphons clear of silt although 3ft. per second is desirable for carrying the heavier sands. As a result a great many siphons have been installed and this has led to a much more satisfactory road system.

A number of these siphons are of corrugated iron pipe with collars and head walls of concrete ; others, where concrete material is lacking have timber head walls. It has been found that Oregon pine inlet and outlet walls last about eight years in the dry soil and this is considered as suitable as more permanent work.

The inverted siphon method obviates all difficulties where it is necessary to carry two canals across a road and across each other. This is now done by means of two siphons, one beneath the other.

792 – **Small Irrigation Canals Lined with Concrete to Prevent Seepage Water Loss.** — EDWARDS, C. E. in *Engineering Record*, Vol. 73, Nos. 16 and 17, pp. 508-510 and 539-541. New York, April 15 and 22, 1916.

As a result of lining with concrete about 40 per cent of the canals and laterals of the Okanogan irrigation project in Washington, seepage losses have been reduced from 51 to about 15 per cent of the total water received at the head works. The lining has been placed in the sections of

the canals where seepage losses were greatest, these localities having first been determined by current meter measurements.

The losses in the canal system for 1911 with 43 miles of canals and laterals in operation and only 1 mile concrete lined was 51.1 per cent, an average of 1.2 per cent per mile. The loss for 1915 was 20.4 per cent with 76 miles of canals and laterals in operation, or an average of 0.27 per cent per mile. It is estimated that the further lining for 5 ½ miles which will be completed before this year's (1916) irrigation season commences will reduce the losses to less than 15 per cent.

In the original designs most of the canals were built with 1 on 1 ½ slopes on the upper portions of the project and 1 on 2 side slopes on the lower or sandier portions. A friction factor of $n = 0.025$ was used for the unlined canals, while $n = 0.015$ was found to be safe for concrete lining. The canals as already built and in operation were generally too large for lining without back filling. A concrete lining 1 ½ inch thick was decided upon with a backfill of sand and gravel of at least 3 inches on the bottom and side slopes. According to the size of the canal in some places, the backfill required was 4 to 8 inches and sometimes as much as 2 feet.

The writer describes in detail the methods followed in carrying out the work. Altogether, 134 000 lineal feet of canal were lined and they required 7500 cu. yards of concrete.

The following table gives some data concerning the work done and its cost per cubic yard and per lineal foot.

| | Section A | Section B | Section C | Section D | Section E |
|---|---|---|---|---|---|
| Width of bottom, feet . . . . | 0.50 | 1.25 | 2.00 | 3.00 | 4.50 |
| Total depth . . . . . | 1.10 | 2.00 | 2.25 | 3.20 | 4.60 |
| Perimeter . . . . . | 5.45 | 7.93 | 11.10 | 15.52 | 22.00 |
| Cu. yds. concrete per 100 ft. of canal . . . . . | 2.52 | 3.65 | 5.15 | 7.15 | 10.20 |
| Cu. yds. backfill per 100 ft. of canal . . . . . | 5.00 | 7.5 | 12.00 | 38.00 | 28.00 |
| Lin. ft. per cu. yd. of concrete | 39.50 | 27.40 | 19.40 | 14.00 | 9.82 |
| Total cost per cu. yd. concrete and foundation . . . . . $ | 9.815 | 9.700 | 9.695 | 9.877 | 8.065 |
| Total cost per lin. ft. . . . . $ | 0.248 | 0.355 | 0.498 | 0.706 | 0.823 |

Part of the lining has been in use for four seasons and has given good service and shows no signs of wear. No trouble has been experienced on account of expansion or contraction injuring the lining even when the canal is dry during half the time in summer.

# RURAL ECONOMICS.

RURAL ECONOMICS

793 — **Increase of Yield of the Soil in the Alpine Regions of Salzburg, Austria.** — HAMZA ERNST, in *Wiener Landwirtschaftliche Zeitschrift*, No. 52, pp. 407-409. Vienna, June 30, 1915.

In spite of the long-continued efforts of leading men to replace the out-of-date sytem known as " Egartenwirtschaft " (1) by a rational cultivation of the Alpine region, no noteworthy progress has hitherto been recorded in that direction. The " Landeskulturrat " of the Tyrol alone has taken this very important question in hand.

The enormous value of intensive forage crop production is obvious if we consider that in Austria about 311 220 acres are cultivated on the " Egart " system, the yield of which might without any great difficulty be doubled, and if we compare the yield of artificial grasslands, which is 80 to 100 or even 240 cwt of hay per acre, with that of the " Egart", whih is 16 to 64 cwt. We may remark that in this comparison no allowance is made for the fact that artificial grass-land produces a quality of forage incomparably superior to that of the "Egart ", which contains from 60 to 80 % of weeds or poor quality grass. Unless the population are continually instructed and the question is handled and constantly kept under watch by competent authorities, and the necessary information supplied whenever required, that is to say, unless somebody thoroughly at home in this question both theoretically and practically, takes it up systematically, the money granted to the " Subventionswiesen " (subsidised grass-lands) will in most cases be absolutely wasted.

Not only those parts of the country where " Egart " is practised are very much behindhand, but also those where cultivation prevails. There are at present still fallow lands, for instance the " Flachgau " of Salzburg, in Upper Austria and in various parts of Lower Austria, where triennial rotation is still carried on. As the small region of Salzburg presents these two very distinct systems of cultivation, it is expedient to mention here the conditions of soil utilisation existing on present farms.

I. — Region known as the " Egart " Region (Pinzgau, Pongau, Lungau and Tännengau). — The most usual rotation is: grain crops, grain crops, then 4 years " Egart "; or grain 3 time running, and 3 years" Egart ". There is no reason to do away with this system ; it is sufficient to substitute artificial grass-land for natural grassland. On his trial lands, which were tilled and dressed after the usual manner of the country, the Author nevertheless obtained yields equal or very close to these generally obtained. It is evident moreover that the yields undergo considerable increase if more careful tillage is done and if the preceding crops are better chosen.

(1) The " Egartenwirtschaft ", or " Egart " system, as practised in the mountain regions of Austria, part of Bavaria, etc., consists in fallowing for a certain period, laying down to grass for the same period, and cereal growing for a further equal period. (*Ed.*)

There may be taken as an example the results obtained at the School of Agriculture of Oberhalm, Tannengau, and summed up in Table I.

TABLE I. — *Results obtained at the School of Agriculture of Oberhalm.*

A. — *Cost of bringing an acre of land under cultivation (excess expenses as compared with "Egart" system) — Cover crop: oats.*

| | £ | s. | d. |
|---|---|---|---|
| 1 days ploughing (cost of team 6*s.* 8*d.* per day) | | 6. | 8 |
| 1/4 day harrowing (at 6*s.* 8*d.* per day) | | 1. | 8 |
| 1/8 day to cover seeds mixture | | | 10 |
| 1/2 day to sow oats and seeds mixture | | 1. | 0 |
| 5 1/2 bushels of oats at 2*s.* 6*d.* per bushel | | 14. | 9 |
| | 1. | 4. | 11 |
| Mixture of clover and grasses | 1. | 3. | 4 |
| | 2. | 8. | 3 |

B. — *Yield of hay per acre in cwt. (valued at 2s. 6d. per cwt.).*

| | 1913 | | | | | 1914 | | | | |
|---|---|---|---|---|---|---|---|---|---|---|
| | cwt. | £ | s. | d. | per cent | cwt. | £ | s. | d. | per cent |
| Rotation grass land | 85.61 | 10. | 14. | 0 | 140.66 | 88.70 | 11. | 2. | 0 | 153 |
| "Egart" control | 59.73 | 7. | 9. | 0 | 100.00 | 57.84 | 7. | 4. | 6 | 100 |
| Increased yield | 25.88 | 3. | 5. | 0 | 40.66 | 30.86 | 3. | 17. | 6 | 53 |
| Cost of bringing under cultivation | | 2. | 8. | 3 | | | | | | |
| Net profit | | | 16. | 9 | | | | | | |

C. — *Composition of:*

| | | |
|---|---|---|
| Rotation grass land: | Green oats clover and improved grasses. | 18 % weeds and bad quality grass. |
| "Egart" control: | Clover and improved grasses. | 43 % weeds and bad grass in the hay. 51 % in the aftermath. |

In the regions where "Egart" is practised, and where grass grows heavily, the trials showed that starting cultivation with still green cereals is by far the most advantageous. The reasons are several :

1) This power of strong growth of the grass also influences the cereals, which develop powerfully and produce a large quantity of culm and leaves, throwing so much shade on the seed that its growth is very much impeded ;

2) These cereals lodge easily, which makes the result of sowing doubtful ;

3) It is impossible by tillage to secure anything like complete elimination of the weeds owing to the shallowness of the arable soil.

Besides this, when the fields are sown with ripening cereals, one half at least of such seed is lost. Starting cultivation with still green cereals means

some increase of labour, which is more than made up for by the very much superior quality of the forage. The estimate of starting expenses given above shows that the increased labour only amounts to 2 days' labour of one person per acre and just over 1 ¼ days of one team, and it only recurs every 6 years; evidently then this increased labour can hardly cause any difficulty.

II. — So-called Ploughing Region (Flachgau). — As an example clearly showing the increase of yield which may reasonably be expected, the results obtained on the farm of the peasant *Stadler* at Vollern near Oberndorf and summed up in Table II, may be adduced.

TABLE II. — *Results obtained on the Farm of the Peasant* STADLER *at Vollern near Oberndorf*

A. — *Costs per acre of putting under cultivation (excess of expenses over permanent natural grass land) — Cover crop: oats.*

| | £ | s. | d. |
|---|---|---|---|
| As previously | 1. | 4. | 11 |
| Plus mixture of clover and grasses | 1. | 5. | |
| Total expenses | 2. | 9. | 11 |

B. — *Yield of hay per acre (valued at 2 s. 6 d. per cwt).*

| | 1913 | | | | 1914 | | | |
|---|---|---|---|---|---|---|---|---|
| | cwt. | £ | s. | d. | % | cwt. | £ s. | d. | % |
| Artificial permanent grass land | 47 | 5. | 17. | 6 | 171 | 71 | 8. 17. | 6 | 168 |
| Natural permanent grass land | 27 | 3. | 7. | 6 | 100 | 42 | 5. 5. | | 100 |
| Increased yield | 20 | 2. | 10. | 0 | 71 | 29 | 3. 12. | 6 | 68 |

C. — *Starting cultivation with ripening oats.*

The expenses also amount to £2. 9. 11.

D. — *Yield per acre in cwt.*

| | 1913 | | | | | 1914 | | | |
|---|---|---|---|---|---|---|---|---|---|
| | cwt. | £ | s. | d. | | cwt. | £ | s. | d. |
| Starting cultivation | Grain 12 (at 7. s. 7 d.) = | 4. | 11. | 0 | Hay | 8 | 10. | 17. | 6 |
| | Straw 21 (at 2. s. 1 d.) = | 2. | 3. | 9 | | | | | |
| Total | | 6. | 14. | 9 | | | | | |
| Expenses to be deducted | | 2. | 9. | 11 | | | | | |
| Net profit | | 4. | 4. | 10 (1) | | | | | |
| Control plot, hay | 31.25 (2 s. 6 d. per cwt) = | 3. | 18. | 0 | | 5 | 7. | 2. | 6 |
| | | | | | Net profit | 30 | 3. | 15. | 0 |

(1) Evidently therefore the seed and labour are paid for and the profit realised is enough to cover the loss of one hay crop.

In this particular case (and also perhaps all through the "Flachgau" where fallow land is maintained), the starting of cultivation with ripening cereals is preferable to cultivation with still green cereals; on the other hand the quality of the forage is not quite so fine.

The most frequent rotation in the regions known as arable regions is: rye, oats (with clover sowing), clover, wheat, oats, fallow. "Egart" cultivations are however also met with, and also the different variants of the above example. Fallowing is an inherited trouble.

One must not reckon too much on the resulting increase of the productive power of the soil as it does not exceed that of a well manured field under some well cultivated crop or pulses. From this point of view, fallowing may still be adopted in special cases and by way of exception, but not as a cultural system. On several peasant farms the Author made a trial and replaced fallowing by a corresponding period of some cultivated crop and vetches and oats sown together; the rye which followed was better in quality than that growing after fallow. For instance, on the farm of the peasant ENZENSBERGER, at Enzesberg near "Thalgau", the trial of oats and vetches produced a crop of forage amounting to 140 cwt per acre, which is equivalent to 140 : 4 = 35 cwt of hay. In other places the yield was still higher: the farm of "Winkelhof", for instance, obtained 208½ cwt of forage. Reckoned per labourer, fallowing required 5.5 days labour per acre, oats and vetches only 4.5.

According to the *Statistical Year-Book of the Imperial and Royal Ministry of Agriculture*, there are in the Salzburg region 70 994 acres producing only 23.5 cwt of hay per acre. Assuming, without any allowance for local deficiencies (defective ploughing, etc.), that by undertaking work on a large scale and reckoning only 30 % increase, a much higher result will be secured, there would then be obtained 7.07 cwt of hay per acre (30 % of 23.5 cwt) or, for the 70 994 acres 412 182 cwt of hay, or again (1 cwt being worth 2*s.* 6*d.*) £63 780, Deducting one-fourth, or £15 945 at the beginning of the year, to cover the expenses of starting, there remain £47 835. Furthermore, according to the report of the Imperial Royal Society of Agriculture at Salzburg, the total grass-land area in «Flachgau» is 45 515 acres; assuming that 50 % is made up of sour grass-land, there still remains 22 757 acres of permanent grass-land the yield of which may very well be increased 60 to 70 % as was shown by the example of the farm of Vollern. Reckoning on a production of 24 cwt per acre, the assumed increase of 30 % in the yield would represent 7.17 cwt per acre, making for 22 756 acres, 163 160 cwt of hay, worth (at 2*s.* 6*d.* per cwt) £20 345. Still according to the report of the same Society, there remain fallow in the "Flachgau" 4 386 acres. Taking as a basis the example of the Enzesberg farm, one would obtain 35 cwt × 4 386 = 153 510 cwt of oats and vetch hay worth (at 2*s.* 6*d.* per cwt) £19 138. For the entire Salzburg region, this would mean an annual return of 815 563 cwt of hay, and, in round figures, a net profit in hay value of £83 750, and consequently a *great increase in the public wealth of Salzburg.*

## AGRICULTURAL INDUSTRIES.

INDUSTRIES DEPENDING ON PLANT PRODUCTS

794 - **Table Wines and Blending Wines of Sicily.** — MANCINI CAMILLO, in *Giornale vinicolo*. 42nd Year, No. 21, pp. 369-371. Casale Monferrato, May 21, 1916.

PROVINCE OF CATANIA. — This is the province in which wine-growing covers the largest area: 111 940 acres, producing on the average 6 875 000 bushels of wine, or more than half of the entire production of the island. In view of the special conditions created by Etna, where the vine extends up to more than 3 000 feet, the province of Catania produces very varied wines, from highly alcoholic to the lightest, chiefly red wines, though there are also excellent white wines.

Red Wines of Etna: 1) *Wines of the plain of Mascali* (Giarre, Riposto and Acireale), blending wines, with distinct aroma, alcoholic and strongly coloured;

2) *Wines of the plain of Calatabiano* (Piedimonte Etneo, Fiumefreddo, Faggi, etc.), less alcoholic, aromatic, fairly agreeable, reserved chiefly for local consumption;

3) *Wines of Feudo*, produced in the Feudo plain; less coloured and less alcoholic, do not keep so well;

4) *Wines of the middle mountain zone*, grown on the slopes of Etna (Randazzo, Linguaglossa, Castiglione), of ruby colour shading to orange; good taste; agreeable aroma, medium alcohol content;

5) *High mountain wines*, grown on Etna at between 2 600 and 3 900 ft altitude; these are light and tart table wines.

White Wines: The southern slope of Etna (Viagrande, Zafferana, Trecastagni, Pedasi, Nicolosi) produces good white wines. If allowed to mature by ageing, they constitute excellent table wines. The province of Catania also produces white wines of the Marsala type.

In 915 wines of this province analysed at the Royal Wine-making School of Catania, the alcohol content ranged from a minimum of 6° (Giarre) to a maximum of 14°.5 (Acireale).

PROVINCE OF PALERMO. — Possesses 55 600 acres of vines producing a little more than 22 million gallons of wine of every description, from the commonest to the finest table and blending, white, red and light red. The blending wines with a fine garnet-red colour are produced by "perricone" stock; when blended with the white "catarratto", the "perricone" gives fine red table wines. These stocks, with the system of "pesta-imbotta" (1), give excellent light red wines. Some white wines of the Sauterne type, but warmer and more alcoholic, are also known abroad: the *Corvo* of the Duke of Salaparuta, the *Calattubo* and the *Zucco*. In

(1) According to the system known in Sicily as "pesta imbotta", the must, produced by treading the grape with the feet shod with nailed boots in masonry vats, is collected in "mastelli" (lower vats), from which it is conveyed to casks (which are filled $^4/_5$) to complete alcoholic fermentation. — Cf. Dr. Antonio Sannino, *Trattato completo di Enologia*, Vol. II, p. 39. Conegliano, 1907. (*Ed.*)

95 wines of the province of Palermo, analysed at the above mentioned School, the alcohol content ranged from a minimum of 11°.6 (Santa Flavia) to a maximum of 18°.14 (Partinico).

PROVINCE OF MESSINA. — Although the vineyards here only occupy the coastal region, they nevertheless cover 51 400 acres and produce on the average more than 17 600 000 gallons. The most famous wine of the province is *Milazzo*, produced by the "Nocera" stock: this is a much appreciated blending wine because it combines fairly strong acidity (6° to 10°) with colour and rich alcohol content (14° to 16°). The wines of Faro are also in high repute in the province. The Aeolian islands produce the famous *Malvasia di Lipari*, one of the finest white wines, containing from 13° to 15° of alcohol and from 17.28 to 27.20 ounces of dry extract per gallon.

PROVINCES OF GIRGENTI AND CALTANISSETTA. — The wine making industry is of no particular importance here.

More than half the Sicilian vineyards have been restocked with American wines.

795 - **The Wine of Grapes treated with Arsenates.** — TROFIMENKO M. and OBIEDOFF S in *Le Progrès agricole et viticole*, Year 33, No. 14, pp. 331-333. Montpellier, April 2, 1916.

By experiments recently carried out at the School of Agriculture of Montpellier (France), the writers show that in the control of the parasites of the vine, particularly *Conchylis ambiguella* and *Polychrosis botrana* of the second generation, arsenical salts embodied in wet mixtures are superior to all the other treatments tried. To allow of general application of these salts, however, there must be the certainty that the wine produced will not be poisonous.

Messrs. MOREAU and VINTE have already shown, by experiments carried out in the north-west of France, that these wines are not toxic. Nevertheless, as it may occur that in these parts the frequent rains wash all the mixture applied off the grapes, it was desired to repeat the experiments at Montpellier under the most favourable conditions for the continuance of the arsenical salts, both on the grapes and in the must.

The grapes had been treated late with wet arsenical mixtures; no rain had occurred between the treatment and vintage; the arsenical substance formed a *continuous* layer round the grapes, stalks, and stems.

The density and acidity of the must obtained from the grape subjected to different treatments (nicotine, arsenic, lime, water 65 %) and from the control grapes were practically the same. Wines obtained from grape treated with arsenic showed under analysis the following quantities of arsenious anhydride:

| Red Wine | Arsenic | White Wine | Arsenic |
|---|---|---|---|
| Wine . . . . . | Traces (0.0002 per litre). | Wine . . . . . | Nil |
| Lees (1st) . . . . | 0.001 gr per litre | Lees . . . . . | Traces |
| Lees (2nd) . . . . | Traces | | |
| Grounds . . . . . | 0.05 gr per kg of dried grounds. | | |

Although all the operations were conducted so as to ensure the best conditions for the arsenic to pass into the wine as much as possible (the floating skins were forced under regularly every morning; the must was stirred up; racking was delayed until the completion of fermentation); arsenic is therefore absolutely absent from white wine and only occurs in minute traces in he red wine. The latter tasted very good; the Authors consumed from 5 to 6 litres of it without the slightest sign of poisoning or indisposition occurring.

The lees may be used for extracting the tartar, washing being sufficient to remove the arsenates. The grounds cannot be used either as cattle or poultry food.

Other uses of the grounds are possible (manure, treatment of mildew, etc.)

The experiments will be continued.

796 – **The Determination of the Iodine Index of Alcoholic Liquids.** — MARCILLE R., in *Bulletin de la Direction Générale de l'Agriculture, du commerce et de la colonisation*, 20th Year, No. 86, pp. 18-28. Tunis, January, February 1916.

It is proposed to study the action of light during the determination of the iodine index in essential oils, this action being remarkable when the oil is dissolved in alcohol. This is a matter of practical importance, especially now that, apart from current requirements of the liquor trade, other reasons for these determinations have been created in consequence of the legislation as to the maximum content of essential oil in alcoholic liquors.

The Author sums up in a few tables the results of the determination of the iodine indices, in the dark room, with reduced light and in full day light, for some essential oils, as well as the influence of the alcohol content and length of contact, that of the temperature, the grade of the essential oil, its quality and age. The following are the final conclusions :

Among the essential oils studied, these of Aniseed and *Illicium anisatum* (Chinese Aniseed) alone show an increase in the iodine index through the action of light, and this property may be used to characterise them. Any mixture of essential oils which exhibits in light an iodine index above that obtained in the dark room, will contain oil of aniseed or oil of *Illicium anisatum*. Oil of peppermint is distinguished from menthol by the fact that the former has a remarkable iodine index, while that of the latter is nil. Thus even the ratio of mixture in flavoured products might be determined. The determination of the iodine index of essential oils requires the following precautions : the use of a uniform volume of alcoholic solution of the same strength in all the tests (100 cc. of solution at 50°), the addition of the chloro-iodo-mercuric solution (30 cc.) in a dark room and keeping the bottle in the dark during contact; taking care that all solutions should be of the temperature of the surrounding air. For accurate determinations, the tests with a standard essential oil preparation should always be carried out at the same time.

797 – ***Pectinobacter amylophilum*, a New Organism which may be of Practical Importance in Flax Retting.** – MACRINOV J. A. (Sur un nouveau microorganisme provoquant la fermentation de l'amidon et des substances pectiques), in *Archives des Sciences biologiques*, published by the Imperial Institute of Experimental Medicine in Petrograd (French edition), Vol. XVIII, No. 5, pp. 440-452, 8 fig. Petrograd, 1915.

When carrying out bacteriological analysis of a sample of soil, a new micro-organism was isolated the behaviour of which in the presence of starch attracted attention. In contrast to other micro-organisms which have the power of decomposing starch but prefer sugar, this one prefers starch to sugar.

The researches were conducted at the Laboratory of the Section of General Microbiology in the Imperial Institute of Experimental Medicine of Petrograd. Here the behaviour of the new bacterium was studied in relation to the fermentation of sugar, starch and many other carbohydrates, pectic substances, nitrogenous substances, and cellulose, and also the products of its vital activity in a suitable environment.

The name of *Pectinobacter amylophilum* corresponds to the biochemical properties of the new bacterium. The name of the genus, *Pectinobacter*, indicates its property of acting on the pectic substances; and as to the name of the species, *amylophilum*, it points to its tendency to use starch exclusively as carbohydrate food.

*Pectinobacter amylophilum* is rod-like, somewhat swollen towards the centre, from 4 to 6μ in length, with a diameter of 0.5 to 1μ. It is mobile, and in fresh cultures has a spiral movement. Before sporulation, the bacterium assumes a spindle-shaped appearance, and the spores, elliptic in shape, are born in the widest part of the rod. When the vegetative parts of the bacterial cell are destroyed, the spores are set at liberty, and, if the medium is favourable, their development begins.

CONCLUSIONS: 1) *Pectinobacter amylophilum* is the specific agent of the fermentation of starch and pectic substances. It also acts on the products of hydrolysis of starch, although it has an evident preference for the latter.

2) Owing to its property of acting energetically on the pectic substances in an aerobic environment, the new microbe may be of great practical importance in flax retting.

The behaviour of this microbe in relation to pectic substances has been studied in the process of flax retting, in aerobic, anaerobic, and mixed environments. In the first case, the flax stalks, bound into bundles, were heated in pure water. In this way a large quantity of organic substance was extracted. The liquid was thrown away and the bundles sterilised in some more water. After inoculating with bacteria, the bundles were placed a thermostat at a temperature between 30 and 45° C. After 8 to 10 days, retting was complete. The fibres as well as the boon separated easily. It is found from experiments with the fibre that it is of good quality and considerable strength, although fine and delicate. It keeps whole and does not break up into shreds. The yield of the flax in the shape of fibre and tow is an excellent one with this treatment. Investigations are being continued.

The retting in an anaerobic medium was carried out in wide tall glass

cylinders filled with water to the brim, the whole length of the flax bundles being put into the cylinders. Sometimes, in order to have a real anaerobic environment, small bundles of flax stalks were put into small test tubes, and the air pumped out. The experiments showed that the action of the microbe in an anaerobic environment is insignificant. In a mixed environment (intermediate between aerobic and anaerobic) the work of the bacterium is less active than under purely aerobic conditions, and more intense than under anaerobic conditions.

(3) The new bacterium, which has the power of acting on starch and destroying the vegetable tissues, should play an important part in the destruction of the vegetable masses falling on the soil.

798 - **New Method of Flax Retting Invented at the Technological Institute of Petrograd.** — See No. 753 of this *Bulletin*.

799 - **Hats made of Chinese Palm Leaf.** — CHIERI C., in *L'Agricoltura Coloniale*, Year X, 1st Half-Year, No. 4, pp. 187-189. Florence, April 30, 1916.

A new Chinese industry is here described, namely, the manufacture of hats from the leaves of a palm tree not yet identified botanically and which the Chinese name merely describes as Tung-shu (palm plant).

This palm tree is said to be one of the varieties of *Chamaerops fortunei*.

The leaves for hat manufacture are gathered at Kwanksien, a few miles from Chêugtu, a hilly part of the country, where the plant grows wild in large numbers, thriving in the rather poor and moist soil. The tree presents different varieties, some specimens reaching a height of 6 feet. For hat-making, however, the leaves of the small, young plants are used as they are more fibrous and flexible, and narrower. The leaves are imported into Chêugtu and are there cut up into long strips of uniform width. From each leaf 100, 110 or up to 120 strips are cut, according to the quality of the hat and the flexibility of the leaf. The cut strips are boiled in water and steeped in a special bath, from which they emerge light yellow in colour. On drying by exposure to the air the colour turns to pearl. For a hat of the finest quality, 16 leaves, *i. e.* about 1750 strips, are required, while an ordinary hat requires an average of 1100. The hat is begun and finished by the same workman, and is afterwards washed in an acid solution of secret composition and is next hammered, if desired. Hammering, which is carried out by specialised workmen with polished round stones, is a difficult operation which imparts to the hat a particularly brilliant gloss of very pleasing effect.

The best hats turned out by this new Chinese industry, which is barely a year old, are fully equal to genuine panamas. They are in such demand in the home market that it is intended to double the number of workmen; enquiries from abroad are also beginning to come in.

INDUSTRIES DEPENDING ON ANIMAL PRODUCTS

800 - **The Cheese Industry in Portugal.** — RAMIRES BAPTISTA ADOLPHO, in *Broteria, Serie de Vulgarizacão Scientifica*, Vol. XIV, Part III, pp. 150-164. Braga, May 1916.

The cheeses manufactured in Portugal proper are of different types, named according to the locality or region of production. They are gener-

ally small, being from 1.1 to 4.4 lbs. each, or in rare cases 4.4 to 6.6 lbs.

Among the oldest kinds manufactured, the chief are : 1) " Serra da Estrella " and its varieties " do Alemtejo " and " de Azeitâ " ; 2) " Castello Branco " ; 3) " do Rabaçal ". All of them are made from ewes' milk except " Castello Branco ", which is made from goats' milk or goats' and ewes' milk mixed, and they are all soft cheeses. The best is the Serra, which, if well prepared, will compare with any foreign cheese made from ewes' milk. Besides these, however, there are a large number of very different descriptions of cheese of local manufacture and consumption, among which there are mentioned : " saloio " made with cows' milk in the neighbourhood of Lisbon, and eaten fresh ; the hard goats' milk cheese of Beira-bassa ; and the small cheeses of Serpa weighing from 2.4 to 3.5 ounces and of very delicate flavour. During the last few years two new descriptions worth mentioning have appeared on the market, the only hard cheeses manufactured in Portugal : one is an imitation of " Caerphilly ", and the other is known under the name of " Cardiga ". Imitations (generally good) of Camembert, Edam and Gouda are also made.

In the Azores, where cheese-making is on an industrial scale, the hard cheeses " Pico ", " San Jorge " and " Terceira " (so-called from the name of the islands where chiefly produced) have been manufactured for a long time almost exclusively from cows' milk. From the island of San Miguel the cheese industry has long since disappeared, butter-making having completely taken its place. The cheeses produced in the Azores are held in great esteem in Portugal. They weigh from 11 to 33 lbs. each, and sometimes, though less frequently, 44 to 66 lbs.

In Madeira, cheese-making is in process of development. Fairly successful imitation of the Edam, Gouda and Cheddar cheeses are turned out, skim milk, produced in large quantities by the butter industry, being partly utilised.

Among the cheeses made in Portugal proper, the Serra fetches the highest price (from 45 to 60 centavos, i. e. 11d. to 1s. 3d. per lb.) The Alemtejo is hardly any cheaper, but the island cheeses are a little lower in price ; the minimum market value to which they sometimes drop is 30 centavos, or 7 ¼ d. per lb.

In Portugal, the total annual production of cheese has been calculated to amount to 6 210 tons, being 5 560 tons for Portugal proper and 650 tons for the Azores. These figures do not include Madeira. The quantity manufactured from ewes' milk is estimated at 3 000 tons, that from mixed ewes' and goats' milk at 1 100 tons, that made from goats' milk at 1 200 tons and that from cows' milk at 910 tons.

In continental Portugal cheese-making is chiefly a home industry, carried on with primitive implements and on primitive methods. For curdling, the rennet of the kid is sometimes used, but mostly the dried flowers of *Cinara Cardunculus*. There are, however, some large factories equipped with up-to-date plant ; these turn out almost all the cheese manufactured in the islands.

The manufacture of imitations of foreign cheeses, chiefly as an ad-

junct to the butter industry, was encouraged a few years ago by the district agricultural experiment Farms ("Quintas districtaes") and afterwards by the Schools of agriculture, especially those of Santarem and Coimbra.

The chief defect in the cheeses produced in Portugal proper is their lack of standard quality. As to the quantity produced, it is only limited by the milk available, there being a sure market for the entire output. The excessive number of very small farms with little livestock makes it difficult to improve the cheese industry. In the Serra da Estrella, where sheep and goats are most productive, each female, during the lactation period, furnishes 8.8 to 9.8 galls. of milk beyond what is required for rearing, which is a comparatively good output. The flocks, however, are very small, rarely numbering more than 200 head. Mostly they consist of 100 and even less. Here and in Central Beira, the milk production is of equal importance with wool production. In the Alemtejo, milk production is secondary in importance to wool, meat and tallow. Though in this latter province the flocks are larger, this is set off by the low figure of production, which sometimes is only 2.2 galls per head above the rearing requirements.

AGRICULTURAL PRODUCTS : PRESERVING, PACKING, TRANSPORT, TRADE

801 – **The Measures to be adopted for Preventing Unfair Competition in the Cheese Trade.** – BÄRTSCHI J. and HALDEMANN M. (President and Secretary of the Swiss Union of Cheese Exporters). *Fédération Internationale de Laiterie, VIème Congrès International de Laiterie à Berne, 8 au 10 Juin* 1914, IVth Section, 8th Question, Report No. 3, pp. 1-3.

The writers put forward the following proposals, the carrying out of which may assist in combating unfair competition.

1. Constant work subsidised by the State, with the object of improving the quality of milk and dairy products (keeping powers, fat content, etc), *i. e.*:

(*a*) Directions as to fattening, treatment and feeding of dairy cows (return to nature) ;

(*b*) Instructions as to milking (the utmost cleanliness in milking and handling the milk) ;

(*c*) Strict observance of existing laws (law on the trade in food products, special enactments and regulations) ;

(*d*) better technical training for manufacturers (cheese makers), as, if the goods will not keep, they have to be sold at any price, and the fluctuations are in that case ruinous.

The importance of milk and dairy products in human food alone justifies these measures, apart from the enormous value involved.

2. Establishment of international standards for a uniform method of judgment and analysis of cheese, which would allow for present commercial practices and training of specialist experts whose opinion would be decisive in disputes.

3. More intensive joint work between co-operative organisation, Chambers of Commerce and the authorities.

4. Thorough systematic propaganda for the increased consumption of cheese as a healthy food for the people.

802 – **Changes occurring in Potatoes during Storage.** – See No. 743 of this *Bulletin*.

# PLANT DISEASES

## DISEASES NOT DUE TO PARASITES OR OF UNKNOWN ORIGIN.

803 – **Gummosis in the Citrus Plantations of Florida.** — STEVENS H. E. in *University of Florida, Agricultural Experiment Station, Report for the Fiscal Year ending June 30th, 1914*, pp. 57-71. Tallahassee, Fla., 1915.

Gummosis is common in the citrus plantations of Florida, causing greater damage year by year, especially in the north. Among citrus trees, C. Aurantium amara alone appears exempt.

Very little is known as to the origin and cause of this disease. It is certain that its development is influenced by several factors, and although many species of fungi are associated with gummosis, none of them can be regarded as the true pathogenic agent.

With the object of making a contribution to the study of this interesting question, the writer undertook a series of researches and experiments and a very careful investigation into the course of development of the infested areas. Several inoculation trials were made, both with crude diseased material and with pure cultures of *Diplodia natalensis* and *Phomopsis Citri*.

The 18 infested areas studied for a period of 13 months were selected so as to represent as closely as possible the different stages of development of the disease.

Three stages are distinguished : 1) the tissues seem impregnated with water over small portions of the bark ; small lesions and a few cracks appear from which a slight amount of gum exudes ;

2) The secretion of gum increases, the bark tissue hardens and cracks all over ;

3) Below the diseased part, the cambium forms a new parenchyma, and the diseased portions are ultimately completely eliminated, leaving a dry rough scar.

The first observations were made in May 1913 and afterwards repeated at intervals of three, ten and thirteen months.

Of the eighteen infected areas examined at the time the observations were begun, eight appeared already cured, while in the ten others the infection was in full course of development. Five of these latter always continued active, two recovered and then became active again, and finally three seemed fully healed at the end of the thirteenth month.

With regard to the eight other areas, healthy in appearance, four remained so for some time, in two the disease became active for some length of time, and the last two, with the disease in active progress, continued in this condition with extensive mortification of the tissues and abundant secretion of gum.

As will be seen, the development of the disease is very slow, with alternating active and passive phases, which may be related to variations in the degree of resistance of the plant attacked. When healing takes place, the whole of the infection has not been eliminated through the tissues of the host, but the pathological process appears to be arrested, perhaps owing to the formation of new tissues which react with more intensity against the disease. This is the period of greatest resistance of the plant. Afterwards the continuation of the attacks, excessive production of fruit, and other factors also, weaken and exhaust the plant, lowering its resisting powers so that the infected area reverts to the active stage, and the disease spreads to the surrounding tissues.

The writer also carried out inoculation experiments with diseased tissue, with cultures of *Diplodia natalensis* and with cultures of *Phomopsis Citri*, both on young orange trees in pots and on adult plantation trees. No definite conclusions can be drawn from the results obtained, as it was not possible in any case to produce the formation of the characteristic infected areas. In the adult trees there was, it is true, a slight secretion of gum, with partial mortification of the tissues, but it was only for a very short time, and over very limited extents of the bark. The results are still more negative in relation to young plants, which are undoubtedly endowed with a higher degree of resistance.

In the control experiments the best results were obtained by means of cupric paste and carbolineum :

(1) Cupric paste : solution of sulphate of copper and milk of lime in equal parts ; mix thoroughly, then add lime until the mixture acquires a certain consistency. The infected areas were cured in the proportion of 64 %.

(2) Carbolineum diluted in soap water : cures 60 %.

Before applying the antiseptic, it is necessary to cut away unstintingly all the infected wood and the adjacent parts, and not to confine oneself to simply scraping and removal of the bark, as is usually done in the majority of cases.

804 – **Citrus Barkrot in the Philippines.** – ZERBST G. H. in *The Philippine Agricultural Review*, Vol. VIII, No. 2, pp. 95-97, Manilla, 1915.

The appearance of the disease known as " citrus barkrot " has caused serious injury to the cultivation of citrus trees in the province of Batangas, Philippine Islands. This disease having broken out with special severity

after the eruption of the Taal volcano in January, 1911, many growers believed that the eruption, which defoliated the trees, is responsible for the outbreak.

The mandarin (*Citrus nobilis* Lour.) appears extremely susceptible to the disease. The "calamondin" (*C. mitis* Blanco) is also attacked, but with much less severity. The sweet orange (*C. Aurantium* L.) and the pomelo (*C. decumana* L.) are much more resistant than the mandarin to barkrot, being seldom attacked to a serious degree.

Barkrot has much in common with gummosis, with the difference that the disease is an exudation of sap instead of gum, and that young trees and seedlings are immune. The characteristic of barkrot in which it is similar to gummosis is that in some cases badly infected trees mature their fruit prematurely, the fruit showing a bright yellow colour while still very small. This is particularly noticeable in the mandarin, which usually does not colour well in the Philippines.

The disease makes its presence known by the oozing out of sap from the bark, which softens and forms a putrid sore, varying in size from one-half to 3 $^1/_2$ centimetres on the trunk and branches, generally at the height of $^1/_2$ to 1 $^1/_2$ metres from the ground, though the disease occurs as high as 3 to 4 metres on the larger branches. Where the outbreak is severe these spots occur thickly and finally unite, with the result that the tree or branch is quickly girdled. Numbers of insects are attracted to the sores by the putrid sap, and the spots are usually found to be infected with the larvae of various insects which keep up the irritation. As the tree strives to overcome the disease, the spots dry up, the edges of the sores begin to heal over, and the bark curls or scales. On brushing off the dead bark the new wood is seen forming on the edges of the sores, giving to badly affected branches a queer distorted appearance.

The term "barkrot" is to some extent misleading, as the disease does not originate in the bark. If the bark and cambium layer are cut away and the underlying wood carefully examined, a dark-coloured area, usually of a brown to a reddish tinge, is found. This extends into the wood to different depths. As in gummosis, the sap collects in small pockets between the wood and cambium layer until the bark is separated from the wood and finally split by the pressure within, so that the sap oozes out.

The Philippine Bureau of Science has carried on investigations on barkrot, but failed to find an organism to which the disease might be attributed. Apparently it is a physiological disease produced by unfavourable soil and cultural conditions. The irregularity of the water supply is also a factor.

Proper ploughing and cultivation varying in depth each year, and the planting of leguminous cover crops during the rainy season, are apparently essential in the prevention and cure of barkrot. The cover crop should be cut and left as a mulch during the dry season. The treatment of the tree itself is a matter of secondary importance.

The earth round the tree should be thoroughly loosened and stirred.

The diseased spots should be cut out down to the healthy wood, at once

painting the wound with a protective material. The Philippine Bureau of Agriculture has worked satisfactorily along the above lines, obtaining improvement which leaves little to be desired under this treatment.

805 – **"Parch Blight" on Douglas Fir in Oregon.** – MUNGER THORNTON T. in *The Plant World*, Vol. 19, No. 2, pp. 46-47. Baltimore, Md. February 1916.

Quite frequently, in the spring of the year, the foliage of the Douglas fir trees in the vicinity of Portland, Oregon, turns brown, and entire trees are sometimes as sere as though recently dead or dying. With the beginning of the growing season, however, most of the buds open normally, and by midsummer the trees have regained their usual green appearance, many of the old needles dropping off.

The injury is generally limited to temporary inhibition of growth, with a slight loss of timber production. Isolated trees are more liable generally to the disease than dense groves. Exposed eastern sides of forest are more affected than the western sides in protected locations.

The blight is due to the dry east winds that occasionally sweep across the Cascade Mountains, the vicinity of Portland being particularly exposed to the direct sweep of these winds down the canyon of the Columbia river.

The Douglas fir (*Pseudotsuga Douglasii*) in this region is called the Coast form, and is particularly dependent upon a humid, mild climate, and consequently suffers from these hot, dry blasts, which cause excessive transpiration and produce the above injuries.

806 – **Fruit Injury during the Fumigation of Citrus Trees: Causes and Remedies** (1). – WOGLUM R. S. in *The Fruit World of Australasia*, Vol. XVII, No. 3, pp. 70-72. Melbourne, March 1st, 1916.

The production of citrus fruits in Australia amounted in 1913-1914 to 1,341,878 bushels of oranges of the value of £ 497,286, while that of lemons was 297,083 bushels valued at £ 97, 753. The problem of protecting citrus trees against their enemies therefore is of great importance. The method of control most in use is that of fumigation with hydrocyanic acid, a very effective system, but one which sometimes pits the fruits. The writer proposed to investigate methods of avoiding such injury. The pitting of fruit caused by hydrocyanic acid fumigation has been put down by specialists to various causes, such as sulphuric acid, the presence of nitric acid in the sulphuric acid, the too rapid evolution of the gas, the absorption of the gas by the water on the tree, an abrasion of the fruit produced by the tent placed over the tree, etc. The impurities contained in the two reagents used, however, potassium cyanide and sulphuric acid, are in such small quantities that they cannot produce any marked effect. On the other hand there can be no question of the pitting being caused by minute drops of sulphuric acid thrown off in the over-rapid evolution of the hydrocyanic acid, as in that case the injury would only affect the fruits placed lowest and in the immediate vicinity of the generator. The most seriously injured fruits, however, are those at the top, and sometimes they are the only ones

(1) See also *B.* June 1911, No. 1067. (*Ed.*)

injured. If fumigation is carried out before sunset the pitting is sometimes only found on the sunward side. Finally, if instead of sulphuric acid phosphoric acid, which is stable and has a very slow reaction is used, the extent of pitting is not in the least reduced nor, as the author ascertained experimentally, is it reduced when chemically pure hydrocyanic acid is employed. It may therefore be concluded with certainty that the pitting is caused by hydrocyanic acid and by no other cause. It depends : (1) on the quantity of gas used and the length of fumigation ; (2) on the condition of the plants treated ; (3) on atmospheric conditions.

Generally speaking, a plant weakened by gummosis, for instance, sustains more injury than a vigorous one. The pitting is more severe in fruits with thin skin, especially if the latter has recent abrasions. The Author found that on fruits pricked with a fine needle, then subjected to fumigation with chemically pure hydrocyanic acid, a depressed pitted zone always formed round the prick. Consequently the bulk of the injury arises from lesions occasioned during the pulling over of the tents.

The pitting is much more severe when fumigation is carried out : 1) during hot sunny days ; 2) when the temperature is near 32° Fahr ; 3) during exceptionally hot nights ; 4) when a strong wind blows and shakes the tents ; 5) during very wet nights.

Excessive moisture in itself occasions more injury than all the other factors together, precisely because it renders the tents more impermeable to gas and heavier, which increases the injury already sustained by the trees when they were pulled over.

The bulk of the injury therefore may be avoided by taking the following precautions : preventing the tents striking the trees as far as possible ; using poles higher than the trees to support the tents ; stopping the fumigation when the tents are heavy with wet or when the trees are wet ; carrying out no fumigation during over-hot days, or when windy, or when the temperature is too low (the author advises adopting 36° F. as the minimum temperature).

Trees sprayed with Bordeaux mixture may not be fumigated until a year later. Failure to observe this rule causes exfoliation. The Author never found any injury follow from fumigation following treatment with lime and sulphur solution.

## DISEASES DUE TO FUNGI, BACTERIA AND OTHER LOWER PLANTS.

807 – **On the Original Range of *Spongospora subterranea*.** — LYMAN G. R. and ROGERS I. E. in *Science*, New Series, Vol. XLII, No. 1096, pp. 940-941. Lancaster, Pa., 1916. GENERALITIES

The discovery of *Spongospora subterranea* by the Department of Agriculture of the United States on potatoes from Peru throws some light on the still unsettled question of the place of origin of this parasite. It is very widespread in Europe, and during the last three or four years has also

appeared in several parts of the United States (1) and Canada, causing extensive damage.

As was shown by the work of KUNKEL, the union between the plant host and the parasite is an extremely intimate one, which proves that the form of parasitism under consideration is of very ancient date.

The disease never assumes acute form, the destruction of the tissues being neither rapid nor complete, but the process of infiltration and destruction is slow, and a comparatively long time is required to overcome the resistance of the plant.

Specimens of the parasite were discovered by LAGERHEIM at Quito (Ecuador) in 1891. It was not stated, however, whether the disease was endemic or whether it came from Europe, where it has been known since 1841.

In the present case the potatoes were native to Peru, coming from the eastern slope of the Andes, the regions of Cuzco and Ollantayatambo at about 10,000 ft. altitude. Some of the infected tubers were even supplied direct by the Indians residing in a locality lying between the valleys of the Umbamba and the Lucumayo near the Panticalla Pass, at 12,000 ft, almost at the limit of potato cultivation. The presence of European materials in these isolated and remote spots must be set aside a *priori* : therefore host and parasite would be indigenous to Peru. This hypothesis is further borne out by another fact : the spores which develop on the Peruvian varieties are much smaller than those found on the European and North American tubers. Generally the disease is much less severe, so much so that the natives pay no attention to it. In the course of time the host appears to acquire a power of resistance which counterbalances the pathogenic action of the *Spongospora*.

Thus two reasons suggest that South America, the place of origin of the potato, also gave birth to *S. subterranea*.

808 – **Changes in the Chemical Composition of Rye Seed due to the Action of Certain Forms of *Fusarium*.** — See No. 742 of this *Bulletin*.

RESISTANT PLANTS

809 – **Experiments on Smut-resisting Powers of Different Varieties of Wheat.** — VON KIRCHNER O. in *Zeitschrift für Pflanzenkrankheiten*, Year 1916, Vol. 26, No. 1, pp. 17-25. Stuttgart, April 22, 1916.

The writer has, since 1903, carried on cultivation experiments at Hohenheim, Germany, with 360 wheat varieties (241 winter and 119 summer varieties) for the purpose of studying their resistance to smut (*Tilletia tritici*). The varieties in question are common wheat (*Triticum vulgare*), dwarf wheat (*T. compactum*), rivet wheat (*T. turgidum*), hard wheat (*T. durum*), Polish wheat (*T. polonicum*), spelt (*T. Spelta*), two-grain wheat (*T. dicoccum*), and one-grain wheat (*T. monococcum*). The seed was brought into contact with fresh fungal spores, and sown on the same day with equal areas for each variety ; the young plants were afterwards all given the same care and at the end of the experiment the number and percentage of diseased ears in all the varieties were determined. The majority of the varieties proved

(1) See *B.* February 1916, No. 246 (*Ed.*)

so prone to the disease in the very first experiment that there was no necessity to test them again; others, showing greater resistance were re-tested two or more times.

It was found that there are only a few varieties possessing great resistance to the disease. Such are chiefly the winter wheats, including the dwarf and rivet wheats.

Among the 194 varieties of winter wheat studied, those belonging to the group *velutinum* Schübl. are the most resistant, namely: « Hohenheim No. 77 " which was attacked 4 times during an experimental period of 10 years, " Fürst Hatzfeld " and also " Fürst Hatzfeld de Cimbal ".

Among the winter spelt varieties there were 3 blue ones belonging to the group *Alefildii* Körn. characterised by great resistance, namely " blue winter spelt with large square ear ", " hairy blue spelt with loose square ear ", and " hairy blue spelt with large square compact ear ".

Summer wheat is slightly more resistant. Mention must be made especially among the 71 varieties of common autumn wheat tested, of the Galician varieties with large square ear, although they behaved somewhat diversely in the different years of experiment. " Red Schlaustedt wheat " and a wheat obtained by pedigree crossing of the varieties " Bohemian Wechselweizen " × " Richelle white early " gave a like result. The most resistant variety was the " beardless Odessa ", which, being tested six times, on one occasion showed 0.56 % and on another 2.5 % of diseased ears.

Among the rivet wheats, the variety " smooth miracle red " which was tested 4 years in succession was entirely free from the disease.

The hard wheats were difficult to infect. Two of them especially are highly resistant, the " white hard smooth wheat with white awn " and the " white hard smooth wheat with black awn ".

Among the Polish wheats which were also difficult to infect, mention is made of the " large ear wheat " and " black awn wheat ".

Among the 5 varieties of spelt wheat which were generally fairly immune, there were 2 blue ones which up to now never contracted the disease.

" The red summer one-grain wheat " was difficult to infect. In 8 experiments the " red hairy summer one-grain wheat " once had no spores and on another occasion had 0.77 % of diseased ears.

The writer then mentions some varieties of winter wheat particularly prone to the disease. They are: " Strube's hybrid No. 26 " with 62.47 %, " Strube's hybrid No. 210 " with 62.98 %, " Buhleudorf wheat with Sperling brown grain " with 64.5 % and " Heines Teverson " with 85.77 % of diseased ears.

The least resistant summer wheats were: " Green mountain " with 24.2 % and " Rimpau red Schlaustedt " with 45.4 % of infected ears.

" White winter bearded spelt " had 44.87 % and the " two-grained winter white semi-awned " had 85.92 % of diseased ears.

Between the high susceptibility and low susceptibility groups are the other varieties tested. It is certain, therefore, that in addition to the varieties fairly or highly prone to the disease, there are others which rarely or

never contract it. These differences might perhaps be still more clearly shown if pure lines were used for experiment, which was not the case here.

These experiments have also proved that among some descriptions of one and the same variety of wheat, a certain agreement is found as regards their resisting powers to smut, but that this is not observed in the most important cultivated forms (ordinary and spelt). The experiments made with common wheat and spelt generally showed that when a wheat is resistant to smut, another belonging to the same botanical group does not necessarily behave in the same way. The degree of predisposition must rather be regarded as a character typical of the wheat under examination.

The author also endeavoured, by infection tests, to study the influence of external factors on the result of contamination with spores of the parasite. Even in the case of wheats which were regarded as prone to the disease the figures obtained in the different years for the same wheat differed greatly, sometimes falling to zero. It follows that the fact that an artificially infected wheat has not contracted the disease does not necessarily mean that it is refractory to it.

The great influence of external factors on the result of infection partly explains the contradictory observations made, especially by farmers, with regard to the smut-resisting powers of different wheats. In well-conducted experiments, however, a fair agreement of the different wheats is nevertheless observed. For instance, out of 17 wheats studied by the author and afterwards also tested by TUBEUF and HECKE, the same wheats were found prone or resistant to smut in all the investigations. The writer concludes that HECKE's opinion that resistance to the disease is in each wheat a constant character influenced by other factors is correct.

Assuming that the degree of resistance is a constant character of the wheat, it must be concluded that this character is hereditary. No such experiments as were undertaken for " rust " have as yet been carried out, to determine whether susceptibility to the disease is hereditary. The writer does not think that the observations relating to rust can be extended to smut.

Without taking into account the question of heredity, the attempt has already been made to clear up the matter of the greater or lesser resistance of certain wheats to smut. TUBEUF suggested that a relation might exist between resistance to smut and the rapidity of the germination of the wheat grains, those wheats which germinate rapidly being the more resistant. This opinion is also supported by APPEL and GASSNER, who claim to have actually found such a relation. The writer's experiments nevertheless have shown that these results do not admit of generalisation and that at any rate this relation does not exist in a large number of common wheats, hard wheats, winter and summer spelts. HECKE obtained the same result. Nor is there any relation between the germinating capacity and the smut resistance, as was proved by the writer.

The difference in smut-resistance is thought by the writer to be due rather to differences in the chemical composition of the plantlets. The observations in respect to various diseases (rust, mildew, etc.), showing that the

most resistant wheats have a different chemical composition from those of low resistance, speak in favour of this hypothesis.

In order to test this hypothesis, the author studied the acid content of wheats differing clearly in their smut resistance. These were young plants of the " Richmond giant wheat " (highly liable to the disease) and " Fürst Hatzfeld " (highly resistant ) which are morphologically identical. It was found that the resistant plants contained more acid than the susceptible ones. The absolute difference is small, but deserves to be pointed out, especially as the morphological characters of the conditions of growth of the two plantlets were the same. It may therefore be concluded from this experiment that there is a relation between the acid content and the resistance to smut.

810 – **Variations in the Resistance of Vines to Mildew.** — RAVAZ L. and OBIEDOFF S. in *Le Progrès agricole et viticole*, 33rd Year, No. 19, pp. 441-447, Fig. 1-6. Montpellier, May 7, 1915.

Though common to all vine varieties, the disease varies considerably in intensity according to the variety. What is the cause of this difference of behaviour ?

It is well known that the stomata are the only channel through which the hyphae of the parasite can enter. The writers, by a large number of experiments, determined exactly the average number of stomata per unit of surface of the leaf stems and petals of many kinds of vines, both French and American, without discovering any relation between the degree of resistance to mildew and the number of stomata. In any case the ratio would if anything be inverse, as there is a relatively larger number of stomata on the corresponding parts of American vines which are well known to have a high degree of resistance, while French vines, very liable to the disease, have fewer stomata.

The degree of attack of the vines is to be explained rather by the more or less early character of the types, and also the time when infection becomes apparent. When the leaf stems are very soft and herbaceous and still in process of growth the disease develops rapidly , causing the axes of the inflorescences to droop and partial rot of the tissues. Later on, on the other hand, when the leaf stems are partially lignified they become highly resistant. The fungus develops for preference on the young organs or on those in course of growth, as for instance on newly formed flowers and grapes.

811 – **Morphology and Conditions of Development of the "Sclerotium Disease of Clover" (*Sclerotinia trifoliorum*).** — PEGLION VITTORIO in *Rendiconti delle sedute della Reale Accademia dei Lincei, Classe di Scienze fisiche, matematiche e naturali*, 5th Series, Vol. XXV, 1st Half-Year, Part 7, pp. 521-523. Rome, April 2, 1916.

DISEASES OF VARIOUS CROPS

Among other questions in connection with *Sclerotinia trifoliorum*, which causes considerable damage to clover fields, especially in northern Europe, no solution has yet been reached with regard to those concerning the conidial or micro-conidial stage of this fungus and the conditions causing the epidemic outbreak of the disease in clover fields. The writer undertook the study of *S. trifoliorum* in order to solve these problems.

On a small plot under white clover (*Trifolium repens*) destroyed by this parasite, it was found that from the many sclerotia remaining flush with the ground, owing to break-up of the neck and stalks of clover, innumerable apothecia began to grow towards the end of October, and continued to appear in the first fortnight of November.

On placing a few ripe apothecia in Petri dishes the spores are found to be scattered in small heaps a few hours later. Each of these heaps is made up of the 8 spores contained in each ascus. As soon as disseminated the ascospores are ready to germinate, both in distilled water and in ordinary nutrient media. *Scl. trifoliorum* is psychrophile. At a relatively low temperature (8° to 10° C.) it rapidly penetrates the entire mass of medium, and in a short time gives rise to many sclerotia. The fragments of mycelium serve perfectly well for transplantation of the fungus in the pure state.

In spreading fragments of mycelium from pure gelatine cultures on potted earth sown with common forage pulses (clover, lucerne, fenugreek), the young plants are rapidly destroyed in proportion as they grow. *Scl. trifoliorum* forms a sort of inconspicuous network or spider's web, which spreads on the surface of the soil, surrounds the base of the young stalk and causes its disintegration. The young plants lodge, and in a few days' time the differentiation of the conidiophores is seen to take place on them. The young plants are liable to infection during the entire germinating phase. As soon as the first leaves have formed, the receptivity appears to cease.

This fungus may also attack the bean, causing a disease with the same characteristics as that attributed to *Scl. libertiana*. The author concludes from the results of experimental infections that the injuries attributed to the latter are also sometimes caused by *Scl. trifoliorum*.

Trial was made of several means of causing the germination of the sporidia springing from the mycelium, but in this as in previous experiments the results were negative.

During years taking a regular course and in which grass crops are at rest before frosts supervene, the "sclerotium disease of clover" does not occur On the other hand, when vegetation is still active at the onset of frosts, the latter soften or injure the tissues and thus facilitate penetration by and growth of the *Scl. trifoliorum*, the apothecia and ascospores of which effect their differentiation even towards the end of autumn, the fungus being markedly psychrophile.

**812 – *Ustulina zonata* on *Hevea brasiliensis* in the Federated Malay States (1).** — SHARPLES A., in *The Agricultural Bulletin of the Federated Malay States*, Vol. IV, No. 4, pp. 98-105. Singapore, January 1916.

*Ustulina zonata* (Lév.) Sacc. caused extensive damage in 1015. It spread more and more in *Hevea brasiliensis* plantations in the Federated Malay States.

It has been noted that the attacks of boring insects are almost always accompanied by the presence of fungi. The latter, by weakening the wood, facilitate the boring of the tunnels both by the larvae and the adults. The

(1) See *B.* Sept. 1915, No. 681. (*Ed*).

fungus in turn utilises these hollowed out parts to penetrate downwards. This double attack often kills the tree, and the injury thus occasioned, especially in 10 to 12 year old plantations, is at times very great.

Means of control : 1) cut off the diseased parts unsparingly and tar the wound ; 2) dig out and destroy old stumps, which are more often than not a source of propagation of the disease.

813 – **Fungoid Diseases of the Sugarcane at Tucuman (Argentina).** — CHAVANNE JUAN, J. in *Ministerio de Agricoltura de la Nación, Dirección General de Enseñanza e Investigaciones Agrícolas, Sección Escuelas Especiales*, Year 1916, No. 51, pp. 5-32, 2 Pl. Buenos-Ayres 1916.

A list and description of the fungoid diseases which attack the sugarcane at Tucuman.

1) " Polvillo " or " gangrena humeda ". — According to the writer, this disease is identical with the " top-rot " (" pokkahbong "), already discovered and studied without much result up to now in various sugar-growing countries (Java, Mauritius, Demerara, etc.). The infected plants can at once be detected by their chlorotic appearance; the leaves lose their gloss and rigidity, the apex droops, the tops of the canes show marked signs of disease which increase and spread downwards along the stalk. The infection spreads from without inwards, and from the young to the older portions of the plant. It attacks the base of the leaves, blocks up the veins and thus prevents circulation of the lymph elaborated in the leaf substance. The infected sheaths become leathery and stiff, thereby hindering the growth of the stalk. Although the pathological evidence as a whole points very strongly to a bacterial cause, the almost constant presence of larvae or other small organisms in the infected tissues suggests that these animal parasites may play an important part in the growth and spread of the disease. The larvae met with most frequently are those of diptera almost all belonging to two species, namely : *Euxesta chavannei* (1) and *E. argentina* Brèthes. If larvae of these diptera taken from diseased plants are introduced into a deep wound produced artificially in the region of the terminal bud, the characteristic symptoms of " polvillo " will eventually occur. A number of lengthy experiments in field and laboratory were carried out in order to discover the cause of this disease. It is contended that there is no specific bacterium of the disease, or obligate parasite the action of which is alone sufficient to rot the crown of the cane, but that it is due to decomposition produced by various micro-organisms not yet determined, which penetrate the plant through lesions caused by insects or other agencies.

It is hardly possible to ascertain accurately the origin of this disease in the Tucuman plantations, the data available only relating to those years when, as in 1893-1894, " polvillo " attained large proportions and wrought considerable havoc. The cultivated sugar cane varieties are not all equaly liable. Some kinds brought from Java (" P. O. Java 36 " and " P.O. Java 213 ") as also " Cayana Roxa ", " Verde de las Antillas ", and " Sin Nombre " are distinguished by a high degree of resistance.

(1) See *B.* Nov. 1914, No. 1079. (*Ed*).

2) *Cercospora Kopkei* (" enfermedad de las manchas rojizas "). — In spring and autumn, especially during the rainy season, the occurrence is frequently noted in the plantation of oblong red spots, irregular in outline, extending over the leaves. When the infection is severe it causes withering. On keeping the infested leaves in a very moist atmosphere, growth of the hyphae of the mycelium of the pathogenic agent, *Cercospora Kopkei*, is soon induced. Using cultures of this fungus it is very easy to produce the disease artificially, though it does not cause great damage, at any rate in the plantations of Tucuman. In any case, it is effectively controlled by means of Bordeaux mixture applied only to the outer and most exposed parts of the plantation, where wind-borne conidia are usually deposited.

(3) *Leptosphaeria Sacchari* (" enfermedad de las manchas anulares "). Oval blotches, 3 mm. in width and 7 to 9 mm. in length, appear on the leaves attacked by this fungus. In an advanced stage of the disease these blotches are white or yellow, dry in the centre and darkest at the edge. The damage caused by *Leptosphaeria* is mostly inconsiderable. For control, it is advised that all the infected parts should be gathered and burnt.

The author also mentions: *Physalospora tucumaniensis* Speg. in Florida, at San Pablo and in New Bavaria: it attacks old and dying leaves, and therefore does no very great harm; *Venturia sterilis* Speg., *Phyllosticta Sacchari* Speg., *Melanconium Sacchari* Massee; *Glenospora Sacchari* Speg., *Fumago Sacchari* Speg., and *Colletotrichum falcatum* Went., the presence of which however has not yet been definitely established.

814 – **Fungous Diseases of Coffee in Malaya.** — BELGRAVE W. N. C. in *The Agricultural Bulletin of the Federated Malay States*, Vol. IV, No. 4, pp. 111-113. Singapore, January 1916.

The coffee disease known as " leaf spot " caused by *Hemileia vastatrix* occurs locally in Malaya, but not to any considerable extent. The fungi of the genera *Hyalopus* and *Cephalosporium* probably batten on the Hemileia and are always found on the ripe patches of this rust.

The foliage is also attacked but less seriously, by *Phyllosticta coffeicola*, *Coniothyrium Coffeae* and a species of *Colletotrichum*.

Among diseases of the stem is the one called " die-back ", which at present is of no economic importance. On sectioning the woody mass of the infected parts, it is seen to be completely over-run by interwoven hyphae belonging to two fungi of the genera *Diplodia* and *Colletotrichum*.

The mycelium of a basidiomycete, the fructifications of which have not yet been discovered, sometimes develops between the bark and wood of the roots, rotting and destroying the tissue.

There are often found, especially on the " robusta " berries, epithelial spots and lesions due, according to ZIMMERMANN, to the action of weather agencies. They do not injure the coffee, but may lead to the attack of dangerous fungous diseases.

Among the fungi observed on the fruits may be mentioned: *Pestalozzia Coffeae*, *Hemileia vastatrix* and species of the genera *Stilbum*, *Fusarium*, *Coniothyrium* and *Capnodium*, the latter in conjunction with scale insects.

815 – ***Ascochyta hortorum*, a new Pest of the Artichoke in Italy.** — GABOTTO L. in *Rivista di Patologia vegetale*, VIIth Year, No. 2, pp. 45-46. Pavia, March 1916.

In February 1916, the Author observed the presence of *Ascochyta hortorum* (Speg.) Smith on artichokes from the Italian Riviera in the neighbourhood of Genoa. The infested artichokes were only half the normal size and badly damaged. An enormous quantity of brown pycnidia were found on the scales attacked, on the peduncles and inside the rotting receptacles. Many bacterial forms were combined with the fungus.

*A. hortorum*, already reported on several kitchen-garden Solanaceae (1), had not been met with on artichokes. Apparently it has undertaken the conquest of new hosts even belonging to different plant families, which renders it still more formidable.

816 – ***Septoria Apii* var. *Magnusiana* and *S. Apii-Graveolentis* n. sp., injurious to Celery in the Neighbourhood of Petrograd.** — DOROGIN G. in *Министерство Земледѣлія. Бюро по Микологіи и Фитопатологіи Ученаго Комитета. Матеріалы по Микологіи и Фитопатологіи Россіи*. Ministry of Agriculture, Office of Mycology and Plant Pathology of the Scientific Committee. Materials relating to Mycology and Plant Pathology, 1st Year, Part 4, pp. 57-75. Petrograd, 1915.

In a garden near Volkor, Petrograd, a large number of adult celery plants were observed to be affected with a disease the most conspicuous symptom of which is numerous spots on the foliage. In July this disease appeared sporadically on separate plots and beds, and in August the appearance of the diseased areas was very unsatisfactory.

The diseased plants of the different groups presented such divergent characters as to suggest many distinct pathogenic agents. Microscopic observations however only disclosed two species of *Septoria*, which are dealt with in the present work.

The plants attacked by the same parasite may present different symptoms according to cultivation or seasonal conditions, as was ascertained by comparing one year with another or separate distant places, but in the present instance the most divergent symptoms appeared simultaneously and in the same place under quite identical conditions of environment for all plants and groups.

One of the *Septoria* might be identified with *S. Magnusiana* All. (=*Phyllctaena Magnusiana* [All.) Bres.], but the writer, as a result of a careful examination of the morphological and physiological characters, proposes to regard it as a simple variant of *S. Apii* [Br. and Cav.] Chester (= *S. Apii* [Br. and Cav.] Rostr.) ; we should thus have : *Septoria Apii* (Br. et Cav.) Chester var. *Magnusiana* (All.).

The disease caused by this fungus occurs in three different aspects : 1) round red blotches, 5 to 10 mm in diameter, darker towards the edges ; few pycnidia scattered in the blotches, towards the end of the leaves , 2) ochre blotches, pale, bordered with yellow ; 3) greyish-white blotches with many pycnidia. The blotches may sometimes be completely absent and the pycnidia gathered in small groups spread over the leaf surface.

(1) See *B.* April 1912, No. 745. (*Ed.*)

The other *Septoria* could not be identified with any hitherto known form and is described as a new species under the name of *Septoria Apii graveolentis* n. sp.

The symptoms of the disease are very varied: 1) inconspicuous light yellow spots, diameter 0.5 to 3 mm, the pycnidia spread over the entire leaf on the spots and outside, separately and in groups; 2) spots of vague outline, reddish-yellow in colour; the pycnidia, few in number, are first restricted to the leaf tissues, afterwards partly emerging; 3) round spots, dirty yellow, maximum diameter 5 mm, in which the pycnidia are situated; 4) dark chestnut spots, lighter towards the centre, strewn with pycnidia.

Both with *Septoria Apii* (Br. and Cav.) Chester var. *Magnusiana* and *S. Apii graveolentis* n. sp., the disease begins with the lowest leaves; these turn yellow without completely withering or drying up. Weather conditions have some influence on the growth and spread of the fungus. After a severe epidemic in 1913, the disease reappeared in the summer of 1914, but disappeared almost at once owing to the drought which prevented germination of the spores.

The *Septoria* have no type of fructification other than the pycnidia. The latter form during the summer, but their spores retain their germinating capacity through the winter and spring. Infected leaves and other vegetable debris remaining on the ground may thus become the source of an epidemic in the following year. The pycnidia also develop in the seeds. They contaminate the young plants from the latter, and eventually, after an incubation period of three or four weeks, produce the characteristic degeneration of the leaf in the already transplanted and growing plants.

The following means of control are advised: 1) careful and thorough examination of seeds; 2) treatment of seeds with dilute formalin, strength 1: 300, for 2 hours; 3) removal from seed plots and destruction of all young plants showing light yellow streaks: 4) picking off the diseased leaves during the summer and pulling up the entire plant in case of very widespread and marked infection; 5) gathering and destruction of all vegetable refuse after the crop.

Finally, attention is drawn to the fact that this refuse must not be used as manure, even if the infection was very slight and only involved a small number of plants.

817 – **A New Disease of the Bamboo caused by *Scirrhia bambusae* n. sp., in Italy.** — TURCONI MALUSIO in *Rendiconti delle sedute della Reale Accademia dei Lincei, Classe di scienze fisiche, matematiche e naturali*, 5th Series, Vol. XXV, 1st Half-Year, Part 7, pp. 528-532. Rome, April 2, 1916.

In a plantation of *Bambusa mitis* Poir. in the Botanical Gardens of Pavia, during the summer of 1914 the branches were wholly or partially dried up, whitish in colour and showed a number of small black blisters. The first symptoms of the disease appeared on branches and twigs of all sizes, preferably at the tip, chiefly on the small branches carrying leaves. Small brownish spots or streaks appear and these afterwards spread and combine, forming blotches which finally occupy several internodes. The diseased parts, which are brown at first, gradually turn whitish and dry, becoming

covered at the same time with the characteristic small black blisters. The disease usually extends from the tip towards the base of the branches ; sometimes the infection is confined to the internodes and the middle or base. In these cases the portion of the branch above the infected part dies and dries away, without showing the characteristic fructifications of the parasite, which only form in the infected parts after their death.

This disease is caused by the parasitism of a new species of *Dothideaceae*, of which a description is given in the ascophore form under the name of *Scirrhia Bambusae* n. sp. and in the conidial form under the name of *Melanconium Bambusae* n. sp.

The disease was reproduced by artificially infecting *B. mitis* and *B. gracilis* Hort. with the fungus.

818 - ***Ascochyta clematidina*, on Stems and Leaves of Clematis.** — GLOYER, W. O. in *New York Agricultural Experiment Station, Geneva, Technical Bulletin* No. 44. pp. 3-14. Plates I-IV. Washington, 1915.

The rotting of the stems and mottling of the leaves of *Clematis* are due to the fungus *Ascochyta clematidina* (Thümen).

The disease first occurs in the form of blotches on the surface of the leaves. On drying, these blotches take on a dark chestnut colouration, with red margins. From the leaf the mycelium makes its way down the length of the petiole as far as the axil where it develops in the surrounding tissue, forming a continuous zone of infection which causes the death of the portions of the plant above this point. The parasite may also develop directly on damaged epithelium in the neighbourhood of the leaf axil.

In both cases new buds and shoots continue to develop below the infected region, until the mycelium of the fungus, spreading downwards towards the base of the plant, eventually infects the whole of the aerial portion and causes the death of the host.

Hibernation in the open, whether in artificial culture or in infected vegetable débris, does not destroy the parasite. As soon as the temperature permits, growth recommences.

*A. clematidina* is easily isolated and develops readily in any of the usual media. Inoculations with pure cultures (mycelium) into *Clematis paniculata* and *C. Jackmanni* gave positive results, and the mycelium derived from artificially infected plants and inoculated on healthy specimens readily reproduced the disease.

*A. clematidina* is clearly distinct from other more common species and inoculation experiments on pumpkins, beans, peas and elms gave negative results.

Sprays containing the spores of the parasite in suspension produce the characteristic blotches on the leaves of *Clematis*, especially when the temperature is about 73° F.

The following methods of control are recommended : 1) transplantation into the open when one year old, allowing sufficient space between the plants for access of air, sun, etc; 2) cutting and destroying all infected portions, subsequently spraying lightly with fungicides. The following mixture is

recommended : Sulphur 1 lb, soft soap 6 lbs, water 12 1/2 gallons ; 3) remove and destroy all vegetable remains among which the parasite is capable of living as a saprophyte.

819 – **Investigations into a Disease of the Cones of *Pinus pinea* in Italy.** — PETRI L. and ADANI A. in *Annali della R. Accademia di Agricoltura di Torino*, Vol. LIX, 23 pp., 12 Fig., 1 Pl. Turin, 1916.

The disease of the cones of *Pinus Pinea* L., long known to gatherers of cones in the pine groves of Migliarino, San Rossore, Cecina and Castel Fusano, under the name of " pine gallerone " and " pine pagliose ", are due to the same identical pathogenic agent. The symptoms caused by the latter however differ to some considerable extent, according to whether the disease develops in autumn or spring.

" Pine gallerone ". — An ochre hued spot first appears in May or June, and from the line of contact between two adjoining scales rapidly spreads right through the cone. The loss of water being fairly large, the outer surface of the scales appears shrunken. Resin exudes here and there from the blackest portions. At the points where the infection is oldest, black pustules of irregular shape form, pushing up and splitting the epiderm of the scales. The shell of the seeds is normal, but the kernel is reduced to a grey or yellowish powder. The weight of these cones is lighter than that of healthy cones which have reached the same stage of development.

The browning of the scale tissue and the destruction of the kernels are accompanied by the presence of the mycelium of a fungus, which spreads from the upper surface of the scales through their thickness and penetrates the endosperm of the seeds, the oily substance of which appears to act as a powerful stimulant on the mycelium in question. The black external blisters are the pycnidia of the fungus, which may be classified as a new species of *Sphaeropsis* (*Sph. necatrix* Petri et Adani).

" *Pine pagliose* ". — The first spots marking the infection are observable in September and throughout the month of October. The external characters of the diseased cones do not differ very much from those of the " pine gallerone ". Thus, the discolouration of the scales, the exudation of resin, destruction of the endosperm, the presence of the mycelium and the pycnidia of *Sphaeropsis* are characters common to the two forms of degeneration ; in " pine pagliose " however the weight is equal, or nearly so, to that of healthy cones, the surface of the scales does not shrink, a number of seeds remain intact and retain their commercial value.

In these cones, owing to the more advanced lignification of the tissues and the less favourable season, the infection proceeds more slowly ; it was therefore easier to ascertain the course it takes inside the cone. The mycelium penetrates between the scales and rapidly attacks the soft parenchyma which envelopes the seed. From this point it spreads through the thickness of the scale towards the lower (external) surface from which the sporigenic organs afterwards escape.

From what has just been said, it will readily be understood that the two names given by pine cone gatherers to the diseased cones only correspond to two slightly different aspects produced by the same pathogenic cause in

the nearly ripe cones, according to whether they are attacked in spring or autumn. It is quite natural that cones attacked in May or June when the tissues are soft and growth is still in progress should suffer a large loss of water, and consequently be very light ; besides the seeds must obviously suffer as a whole from the consequence of the infection owing to the fact that between spring and autumn there is plenty of time for the parasite to exert a destructive action on the entire cone. On the other hand, when the infection occurs in autumn, just before the cones are gathered, the time available for the parasite to encroach on the seeds is very short, both because the spread of the mycelium is hindered by the thoroughly lignified and fully developed tissues, and because the drying of the cones for the purpose of extracting the seeds stops the further spread of the mycelium. If, however, owing to favourable circumstances, the infection is able to continue for a long time, the cones attacked in autumn (" pine pagliose ") may have numerous features in common with those attacked in the spring ("pine gallerone").

The immediate cause of the disease is *Sph. necatrix*. This is proved not only by microscopic examination, but also by experiments of inoculation on healthy cones, in which the disease was successfully reproduced in this way.

As regards means of control, the following are advised : 1) complete gathering and burning of the diseased cones ; this precaution must be strongly recommended to pine cone gatherers, who often omit to gather the " pine gallerone " which are richer in pycnidia of the parasite than the " pine pagliose ". The cones of the " pine gallerone " should even be gathered as early as June, when dispersion of the spores has already begun, because on this depends in part the intensity of autumn infection ; 2) thinning out the pine grove as much as possible, so that the plants are under the most favourable conditions and get the largest possible quantity of light and air. There should therefore be a distance of at least 33 feet between the adult plants ; very dense old pine woods in which there are from 100-110 trees per acre are the worst sufferers from this disease.

820 – **Common Phosphorescent Toadstool *(Pleurotus nidiformis)* and " Sticky timber Pholiote " (*Pholiota adiposa*), Agaricineae attacking Wood, in Australia.** — CLELAND J. BURTON and CHEEL EDWIN in *Agricultural Gazette of New South Wales*, Vol. XXVII, 3rd. Part, pp. 201-202, Pl. 5-6. Sydney, March 2, 1916.

A description of *Pleurotus nidiformis* Berck. (common phosphorescent toadstool) and *Pholiota adiposa* Fries (" sticky timber pholiote "), which destroy the wood by piercing it with their mycelial filaments and thus bringing about decomposition.

The former occurs widely in all the States of the Australian Commonwealth. It grows at the foot of living tree trunks (Eucalyptus and other species), or on dead stems. It is perhaps of no great economic importance. Nevertheless, it would be advisable to destroy it by burning wherever found. It has been described by various authors under different names : *P. candescens*, *P. lampas*, *P. phosphoreus* and *P. illuminans*.

*Pholiota adiposa* appears on the trunks of trees at a height which may be 22 ft and more. In Europe this fungus is very injurious. In Australia

it is found only at one point in New South Wales in dense wood of Mount Wilson, where it was perhaps introduced with European tree species. It has also been reported in Queensland. It is recommended to destroy it by fire whenever found, in order to extirpate it completely from Australia while still very rare there.

## WEEDS AND PARASITIC FLOWERING PLANTS.

821 - **Goatsrue (*Galega officinalis*), a Weed in New Zealand.** — COCKAYNE A. H. in *The Journal of Agriculture*, Vol. XII, No. 2, pp. 125-130, 1 Pl. Wellington, February 21, 1916.

The Noxious Weeds Act, which has been in force for more than sixteen years in New Zealand, makes the destruction of certain plants obligatory. Some of these are regarded as noxious throughout New Zealand, others only in certain districts, according to a declaration by the local authorities.

The goatsrue (*Galega officinalis*) has also just been included in this latter category.

This species of Leguminosae cultivated in gardens in several parts of New Zealand, has only become wild on the banks and in the old alluvial soil of the rivers Manawatu and Pohangina. It spreads rapidly along roads paved with the gravel of these rivers. As usually, *Galega* is not eaten in sufficient quantities by animals to prevent it flowering, it spreads rapidly wherever it takes hold, unless the soil is covered with a thick coating of grass. In New Zealand, the *Galega* often attains 3 ¼ ft. and more in height. It generally flowers towards the second week in December and remains in flower for about two months. If mown a little before flowering, it flowers in March; if the plants are cut at intervals, they may even flower three times in one season. The ordinary method, therefore, which consists in preventing the flowering of weeds by a single mowing per year, is almost valueless for this weed, which must be turned in.

The *Galega* is regarded as a weed because : 1) it is very little liked by cattle ; 2) it tends to choke more desirable plants ; 3) it is considered poisonous.

Towards the end of autumn and in winter, animals feed to some small extent on the branches of the plant when they begin to dry. The same is the case at the beginning of spring, before the branches harden.

On the other hand, all animals refuse the plant during summer, when it is in full vigour. This seems to be due to the bitterness of its leaves. Moreover, at some seasons its leaves are markedly poisonous to sheep, and perhaps also to young cattle. Experiments in France have shown that 10 lbs. of these leaves are sufficient to kill a sheep.

Goastrue, however, has some useful properties. It has even been advised as a forage crop, and is in fact cultivated for that purpose in some parts of Switzerland. If mown when still tender and allowed to wither slightly, it is agreeable to cattle and may be fed to them without danger.

The writer thinks that Goastrue would do excellent service as green manure, especially for very light sandy soils, for which it would perhaps be better even than lupin. It only remains to ascertain whether turning in would suffice to destroy it. Goastrue is plentifully provided with root tubers.

To control this weed, it must be mown at least three times a year, or turned in and a mixture of grass consisting principally of *Dactylis glomerata* and *Lolium italicum* sown on top. It would also be as well, for some time, to roll the grass-land thoroughly. In those parts where the plant specially abounds, clearing of the grass-land and conversion into arable land is advisable.

## INJURIOUS INSECTS AND OTHER LOWER ANIMALS.

822 – **The Entomological Society of Moscow, Russia.** — I. BOLDIREV V. F. History of the Foundation of the Entomological Society of Moscow, in *Извѣстія Московскаго Энтомологическаго Общества* (Bulletin of the Entomological Society of Moscow), Vol. I, pp. 9-13, Moscow, 1915. — II. KULAGIN N. M. Programme of Work of the Entomological Society of Moscow, *Ibid.*, pp. 1-8. GENERAL

The Entomological Society of Moscow, the third of its kind in Russia, was founded in 1913. It owes its formation to the combination of three Associations of Entomologists of Moscow which had until then existed separately.

After referring to the importance of insects to agriculture, the writer adds that the Society has two methods of achieving its object, one is that of enriching science by means of original research, the other the spread of scientific knowledge and training of young scientists.

As regards its practical aims the new Society has already made its first contribution by instituting a short course (from the 16th February to the 10th March 1915) for the training of a technical staff in the control of locusts and field voles. The number of persons attending the lectures was about 150. Most of the hearers consisted of male and female students of the Higher Schools of Moscow.

The said Society has its own organ: « Извѣстія Московскаго Энтомологическаго Общество » (Bulletin of the Entomological Society of Moscow), the first volume of which appeared in 1915. In addition to original work, annual reviews of the literature relating to entomology are to occupy a large space in this publication.

823 – **Insects Pests of Plants Cultivated in European Russia, in 1914** (1). — KULAGIN N. in *Извѣстія Московскаго Энтомологическаго Общества* (Bulletin of the Moscow Entomological Society) Vol. I, pp. 136-161, Moscow, 1915.

The above contains a summary of the facts scattered throughout Russian literature regarding the insect pests of cultivated plants reported in

(1) See the article by the same writer: " The principal Insect Pests of Plants cultivated in European Russia during the last twenty years ", in *Ежегодникъ Главнаго Управленія Земледѣлія по Департаменту Земледѣлія.* (Year Book of the Department of Agriculture). IVth Year, pp. 585-638, Petrograd, 1913 ; and the article by PORTCHINSKIJ I. A., *Ibid.*, VIIth year, pp. 348-360, Petrograd, 1914. *(Ed.)*

1914 in different parts of European Russia. The question of the type of weather in that year is also discussed.

The year 1914 was exceptionally abnormal. The second half of the winter of 1913-1914 was exceedingly warm throughout Russia, and little snow fell, except in the governments of the north-east and east. Thus, in January, the mean temperature in Southern Russia was 6° C (10. 8° F.) above the normal. February was exceedingly warm. The positive fluctuations amounted to 9°C (16. 2° F) in the central and south-eastern parts of Russia. The spring became dry with the return of cold. The first half of the summer (June, July) was very hot and dry in northern and middle Russia. The south, and particularly the south-west, suffered from torrential rains. The second half of the summer was very cool. In August, the temperature was 4°C (7.2° F) below the normal (in the central governments). In eastern Russia the rainfall was much above the normal, while in the western part the drought continued. The first half of the autumn, up to the 10th October was rather rainy, but soon afterwards anticyclonic conditions became established. From September to November the temperature was below the normal throughout the country. It may therefore be said that the year was not favourable to insect development; the early spring, the return of cold during that season and afterwards the drought, all being unfavourable factors.

Among insect pests in 1914. Elateridae occur most widely: injury caused by them was reported in 18 governments, with different climatic conditions (e. g. Moscow and Astrakhan). It was not possible to ascertain the number of species in question. In any case the presence of several species was reported in the government of Kaluga.

The most serious damage was caused by the following insects: *Oria* (*Tapinostola*) *musculosa* Hb.; *Euxoa* (*Agrotis*) *segetum* Schiff. (governments of Ekaterinoslav and Astrakhan); *Pirausta nubialis* Hb.; Elateridae; *Lema menalopa* L.; *Anisoplia austriaca* Herbst; *Oscinella frit* L. (government of Orel); *Cephus pigmaeus* L. (government of Ekaterinoslav), and locusts.

The insect pests reported in Central Russia exclusively were as follows: *Feltia* (*Agroti*) *exclamationis* Schiff.; *Hydroecia nictitans* Bkh.; *Ochsencheimeria taurella* Schiff.; *Lasioptera cerealis* Lind. and *Apion* sp.

*Phlyctaenodes sticticalis* L. was recorded in 9 governments, but only caused injury in that of Kuban, and, to a less extent, in that of Kharkov.

Below is a detailed list of the insect pests, in which, *for the sake of brevity the name of the town stands for that of the government where the injury was caused.*

I) COLEOPTERA. — (1) *Zabrus blaptoides* Kreuts and *Z. tenebrioides* Goeze, both attacking wheat, the former in Ekaterinoslav, the latter in Bessarabia; (2) *Ophonus calceatus* Duft. at Ekaterinoslav on *Setaria germanica*; (3) *Blitophaga undata* Müll., at Stavropol, on the young leaves of barley and wheat; (4) *Meligethes aeneus* F., at Kiev, on wheat, on flowers of saffron *Salix*, *Caltha* and *Viola*; in Bessarabia on the floral buds of *Brassica Rapa oleifera*; (5) Elateridae were reported at Petrograd, Novgorod, Pskov, Viatka, Perm and in Livonia; *Agriotes lineatus* L. caused extensive damage

to spring cereals, at Moscow; at Kaluga the following species were observed: *Limonius aeruginosus* Oliv.; *Agriotus lineatus* L.; *A. sputator* L. and, to a less extent, *A. obscurus* L. and *Athous niger* L.; at Orel together with *A. segetis*, a few specimens of *Athous niger* L. were recorded; Elateridae were reported at Tula and Riazan; at Kharkov, *Agriotes* sp. (?) caused injury to wheat (160 acres were resown) and to cabbages; at Kiev, beets were attacked by the adult *A. lineatus*; in Podolia, by *Athous*, *Limonius*, *Melalotus* and *A. lineatus*; at Ekaterinoslav, *A. lineatus* and *A. niger* caused great havoc to wheat and maize; at Astrakhan, *A. lineatus* produced wide injury to rye (in April), and to different kinds of melons (May and June); in Bessarabia, *A. ustulatus* was found on the ears of barley; (6) *Omophlus lepturoides* Fabr.), in Bessarabia, devoured young heads of rye; (7) *Podosta nigrita* F. was observed in fairly large numbers on the ears of wheat at Ekaterinoslav, its injurious action in relation to grain crops however is not yet quite clear; in the government of Kuban, it caused injury to beet; at Stavropol it was found in quantities in grain fields, on *Bassica Rapa oleifera* and other plants; (8) *Opatrum sabulosum* L., at Kiev, Astrakhan and Kharkov, caused injury to peas, melons, water-melons, cucumbers and young wheat plants; (9) *Gonocephalum pusillum* Fabr., at Astrakhan, attacked plots sown with wheat; (10) *Crioceris merdigera* L., at Kiev, attacked asparagus and onions; (11) *Lema melanopa* L. caused injury to grain crops at Kharkov, Kiev, Stavropol, in Bessarabia and the Crimea; (12) *Choetocnema hortensis* Geoffr, in larval form, was found in the stalk of barley at Kiev; (13) *Choetocnema* sp. was reported at Stavropol; (14) *Psylliodes attenuatus* Koch caused injury to young hemp plants at Orel and in Bessarabia; (15) *Haltica euphorbiae* Fabr. was observed at Ekaterinoslav; (16) *H. oleracea* L., at Riazan, caused great damage to lucerne; (17) *Cassida nebulosa* L., at Kiev, Kharkov and Ekaterinoslav caused damage to the beet; it was also found on maize at Ekaterinoslav; (18) *Laria* (*Bruchus*) *pisi* L., at Riazan, caused great injury to newly sown peas; it was also met with at Ekaterinoslav; (19) *Otiorrhynchus ligustici* L. at Tchernigov, in the larval stage, injured roots of clover; at Kharkov it attacked clover and lucerne; at Kherson, the roots of lucerne; at Kiev, the adults preferred the leaves of the peas to those of the beet; at Stavropol this species was found on the leaves and roots of lucerne; (20) *Sitones lineata* L., at Orel, Riazan and Kharkov, on several pulses; also found at Stavropol; (21) *Baris chloris* Fabr. greatly injured (up to 80 %) kohlrabi, the larvae devouring the whole of the stems; rarely met with on the roots; at Kharkov the insect caused serious injury to cabbages; (22) *Apion* sp. attacked clover, at Orel; and was found throughout Riazan; at Tula the number of larvae which usually feed on clover had considerably diminished, in 1914 according to SAPOZKO, the excessive drought retarding, development and flowering of the clover, and consequently a part of the generation of the clover weevil was displaced in its life cycle; according to STCHERBAKOV's data obtained at the agricultural experiment Station of Chatilov (government of Tula), *Apion* is harmless agriculturally, and cannot be deemed to have any adverse influence on the production of clover seed; at Tchernigov the weevil was found on a

clover field, causing a continuous falling off in production; (23) *A. pomonae* Fabr. was found at Kharkov in small quantities on peas and vetches (with *Sitones lineatus*); (24) *A. craccae* L., at Riazan, was observed on vetches and oats ; (25) *Melolontha melolontha* L. was noted at Orel, Kuorsk, Kharkov and Ekaterinoslav ; (26) *Anisoplia austriaca* Herbst caused great injury at Kharkov, Ekaterinoslav and Kherson ; it was observed at Stavropol and in Bessarabia ; (27) *A. crucifera* Herbst, at Kaluga, caused little harm ; at Riazan, more extensive damage; (28) *A. segetum* Herbst appeared in hosts during the flowering of the rye but occasioned no injury ; they were also observed at Stavropol ; (29) *A. cyarthigera* Scop. was recorded at Stavropol; (30) *A. agnota* and *A. ferraria* were abundant in Astrakhan at the time of earing of the wheat and rye ; (31) *Epicometis hirta* Pod. and *Oxythyrea funesta* Pod. in Bessarabia, devoured the ears of rye, and *O. funesta* the flowers of wheat ; (32) *Pentodon idiota* Herbst, at Ekaterinoslav, Kherson and in Bessarabia, caused injury to maize ; at Kiev, it was found in a ditch surrounding a beet field.

II) LEPIDOPTERA — (1) *Ochsencheimeria taurella* Schiff. caused extensive damage at Orel, Riazan and Kaluga ; (2) *Talis quercella* Schiff., destroyed several hundred acres of pasture in April and May at Astrakhan; (3) *Phlyctaenodes sticticalis* L. was observed in small numbers at Riazan on the grass, and in an oak forest ; damage not noted ; a few at Kharkov, injuring beets in some localities ; also a few at Kiev ; at Ekaterinoslav the larvae injured maize ; fewer in Bessarabia than in 1912 and 1913, and observed on lucerne ; hardly noticed in the Crimea ; at Kherson (experimental field) the lucerne was completely destroyed, and rye half destroyed ; at Ekaterinoslav, the first generation larvae injured the beet sowings ; a normal number also seen at Astrakhan ; (4) *Pyrausta nubilalis* Hb., caused great damage at Riazan to hemp, which was completely destroyed in some localities ; injury noted at Kiev to maize, millet, and once to mustard ; apparently the larvae also injure the sunflower ; in Bessarabia, in the government of Tchernomorsk, and at Ekaterinoslav, this insect did extensive damage to maize ; at Ekaterinoslav, in some localities, the injury destroyed the entire crop; (5) *Acronycta rumicis* L., at Kiev, observed in the larval form on the leaves of the ornamental sunflower, the raspberry bush and *Rumex confertus* Willd. ; also found on maize and on vine leaves ; (6) *Plusia gamma* L. was noted at Kiev, adult in spring wheat sowings, and larvae in beet fields ; also reported at Astrakhan and in Bessarabia ; (7) *Trachea* (*Hadena*) *basilinea* Tb. observed at Orel, at Riazan (on rye ears and in grain) ; likewise at Kaluga and Ekaterinoslav, where it occurred widely (the young larvae found on oats) ; (8) *Hydroecia nictitans* Bkh., in considerable quantities at Tver, Tula, Orel, Riazan and Kaluga; (9) *Oria* (*Tapinostola*) *musculosa* Hb. at Ekaterinoslav was one of the insects causing most havoc to grain crops; in 1913, 376,560 acres were attacked; in 1914 the insect was found nearly as plentifully as in the previous year, but involving a larger area : of 754 625 acres of spring cereals, 200 560 were damaged or destroyed, *i. e.* about 25 % ; M. VITKOVSKIJ gives the following features observed in the growth of the insect: (*a*) early emergence of the larva (first injuries noted 4th April);

(*b*) variations in the date of emergence of larvae (11th May in the Pavlograd district, the smallest larvae were observable and also these ready to accomplish the next phase of development); (*c*) larva passing into the open in spite of heat ; the death of the insect observed to be due to parasitic hymenoptera and an unknown cause ; the same worker observed a fresh kind of damage caused by the insect : on examining the field attacked one is struck by the completely dried and whitened ears, the grain has not formed, at the upper internode the stalk of the ear is destroyed, on the leaf sheaths the inlet and exit holes of the insect are found ; at Kharkov it injured spring wheats, barley and oats, up to 90 % of the crop; damage was also observed in the Crimea ; in the Don region the insect injured 2725 acres, 750 acres being completely destroyed ; (10) *Euxoa* (*Agrotis*) *tritici* L., at Astrakhan injured spring cereals ; (11) *Euxoa* (*Agrotis*) *segetum* Schiff. observed at Viatka, Perm, Ufa, Vitebsk, Smolensk, Kazan, Tambov, Simbirsk, Tula, Riazan, Kaluga, Orel, Kharkov, Kiev ; damage found on some farms of Voronej and Poltava, and in Podolia serious damage at Ekaterinoslav, Samara and Saratov ; the insect observed at Astrakhan and in Bessarabia ; (12) *Feltia* (*Agrotis*) *exclamationis* Schiff. noted at Riazan; (13) *E. segetum* and *E. exclamationis* are two competing species as regards time of flight, and one preys on the other ; at Tula the number of *E. exclamationis* almost exceeded that of *E. segetum* ; (14) *Episilia* (*Agrotis*) *simulans* Hufn. noted at Kiev on rye and on beet leaves ; the larvae destroy the stalk almost level with the ground, the plant then falls and is completely devoured.

III) HYMENOPTERA. — (1) *Cephus pigmaeus* L. : a small number observed at Riazan ; also noted at Orel, Ekaterinoslav, in considerable quantities ; at Kherson it occurred everywhere in the same amount as in previous years ; also noted at Stavropol ; (2) *Athalia spinorum* Fabr. at Kiev, according to the observations of V. M. KOSTINSKIJ, oviposited on the edge of hemp leaves ; at Kharkov, Kherson and Astrakhan it damaged hemp and turnips ; (3) *Bruchofagus gibbus* Boh., at Orel, caused much damage to seed clover.

IV) DIPTERA. — (1) *Hylemyia* (*Leptohylemyia*) *coarctata* Fall., at Orel, occasioned less injury than in 1913 ; at Kiev the damage to the sowings of spring wheat was 10 % ; the rye sowings suffered 12.5 to 15 %; (2) *Agromyza florum* Fabr. noted among injurious insects at Kiev ; (3) *Oscinella frit* L., observed at Ufa, Orenburg, Smolensk, Moscow and in Livonia ; at Orel, it wrought much havoc to spring grain crop sowings ; the early sowings (25th July) of rye and barley suffered more than the late (17th August) ; traces of damage were found at Riazan ; at the agricultural experimental Station of Chatilov (province of Tula) STCHERBAKOV observed injury occasioned by this dipteron to maize, the damage being of the typical character of that occasioned to grain crops ; the maize plant was not destroyed, it had a very strong stalk and in this way proved its capacity to produce a good cob; at Kiev, the insect caused injury to spring cereals; in some localities, in April, the injury wa 44 % of the sowings ; this dipteron did damage at Ekaterinoslav ; inconsiderable injury was observed at Kherson to oats and barley, and on some farms in Podolia ; (4) *Chlorops taeniopus* Meig. was noted at Riazan and Orel ; it seems to be widespread at Ekater-

inoslav and to attack barley by preference ; on the 11th June VITKOWSKIJ observed a new injury caused by the insect : it attacks the growing bud, upward growth is checked, the plant swells abnormally and becomes a monstrosity, the height of these monstrosities does not exceed 6 inches while the neighbouring plants attain 2 ft. 3 ½ inches and more and have already eared ; the monster stalk attains 9 to 12 centimeters in diameter ; (5) *Cecidomyia destructor* Say was observed at Perm, Ufa, Riazan, Tula and Ekaterinoslav ; at Orel it injured the spring wheat and rye ; was reported on some farms in Podolia and in the Crimea ; (6) *Lasioptera cerealis* Lind, found at Orel and Riazan ; in the latter government it was accompanied by *Oscinella frit* L.

V) HEMIPTERA. — (1) *Aelia acuminata* L. and *Eurygaster maura* L., occurring very widely at Riazan ; the last named species was observed on rye ears ; the insect was found beneath stacks (40-56 individuals found beneath two stacks in the district of Mikhailovsk); the migration of the insect to the forests began in the middle of July, and the number there had increased from the middle of August ; (2) *Aelia acuminata* and *E. integripes* Put. were found on cultivated plants at Stavropol; (3) *Eurygaster* sp. was recorded among injurious insects at Orenburg ; (4) *Trygonotylus ruficornis* Geof. was observed at Riazan and Stavropol ; (5) *Adelphocoris lineolatus* Goeze, at Kiev, was seen by VASILIEV to feed on the nectar of the flowers and juices of the floral buds of the mallow ; at Ekaterinoslav it devoured lucerne, and at Kherson it was found on the same plant ; at Kuban it was found on beet sowings ; it is mentioned among injurious insects at Stavropol ; (6) *Macrosiphum granaria* Kirby, at Riazan, where it was found on the leaves of rye, wheat and oats (the aphid sucked the juice from the leaf and the base of the ear) ; on the glumes of oats, the insect produced white spots and caused reduction of the grain ; the attacks were in the proportion of 20 to 25 % ; at Ekaterinoslav the aphid was found on the leaves and ears of barley ; (7) *Pentaphis trivialis* Pass. was observed in large quantities on the roots of barley at Ekaterinoslav ; it was also reported in the Crimea ; (8) *Toxoptera graminum* Rond. ; at Ekaterinoslav, severely attacked barley and oats ; (9) *Tetraneura rubra* Lich.; was observed at Ekaterinoslav and in the government of Tchernomorsk ; (10) *Brachycolus noxius* Mordw. ; presence recorded in the Crimea ; damage not so extensive as might have been expected at the beginning of spring, which is to be put down to the strength and uniformity of growth of the grain crops.

VI) ORTHOPTERA. — (1) *Pachytylus migratorius* L. ; at Orel a small number were found, and also at Riazan ; at Kharkov, on the 9th July at 10 p. m., the flight of a considerable swarm of these insects was observed ; at Ekaterinoslav the insect was noted on maize (with *P. donicus* L.) ; at Astrakhan locust control was organised in a locality where they covered 102 ½ acres, the cost was about £ 30 ; the same control was undertaken at Stavropol, Ekaterinodar, Baku and Elisavetpol; (2) *Calliptamus italicus* L. caused injury at Saratov and Astrakhan ; (3) Locusts (species not identified) : at Orenburg locust control was organised from 15th May

till the beginning of July, the cost exceeding £ 400 ; the same was done at Baku, Elisavetpol, Ekaterinodar and in the region of Tourgajsk.

VII) THYSANOPTERA. — (1) *Anthothrips aculeatus* Fabr. was met with very frequently on rye ears at Kaluga ; (2) *Haplothrips tritici* Kurd. and *Stenothrips graminum* Usef. were observed in considerable quantities ; the former sucked the glumes and grain of rye, the latter was found on oats and seemed to lead to whitening of the ears; in June and July *H. tritici* was found in quantities on the inflorescences of red clover (it was less frequent on white clover) ; at Tchernigov, it was observed that the Thysanoptera had been carried away from the land where previously found, through the agency of red clover roots ; at Ekaterinoslav they occurred very widely and attacked wheat and oats (in the latter case, *H. tritici*); at Astrakhan these Thysanoptera caused injury to wheat, and were found very extensively on this crop in Bessarabia.

VIII) INSECTS ATTACKING SPECIAL CROPS. — (A) Beetroot — (1) *Bothynoderes punctiventris* Germ., at Kiev, in 1914, as in the previous year, it was found in smaller numbers, so that no control measures were cleared on many farms ; at Kharkov, Tchernigov, Ekaterinoslav and Ekaterinodar, it caused injury ; (2) *Lixus ascanii* L. : at Ekaterinodar, M. VASILIEV noted its eggs, yellow in colour, on the stalks of *Amaranthus blitum* L. with which a beet field was severely infested ; (3) *Psalidium maxilosum* Fabr. observed at Ekaterinoslav ; (4) *Tynamecus palliatus* F. noted at Kiev ; (5) *Liparus coronatus* Goeze found on May 14 in the small ditches surrounding land under beet, on the 17th May it was observed that the eggs had been laid in the soil ; on the 29th May some eggs were found near the roots of a carrot ; on the 8th June the eggs were found laid on carrot roots ; at the end of June larvae appeared, and on the 1st September they returned into the ground; the adults devoured the leaves of the beet (beginning with the parenchyma of the midrib) and the carrot (eating transversely) ; (6) *Cassidula nobilis* L. noted at Kiev ; (7) *Castroidea polygoni* L. noted at Kiev ; (8) *Thanotophitus sinuatus* L. at Kiev ; the larvae injured the crops of beet and *Chenopodium album* ; in the laboratory of the agricultural Station of Smielna, the adults readily eat the leaves of the beet ; (9) *Aphis euvonymi rumicis papaveris* F., at Kiev ; the insect was found on the upper and under surface of beet leaves ; viburnum and jasmine are centres of propagation of this aphid on the beet; VASILIEV found females of this insect on the roots of beets left on the field after the crop ; (10) *Macrosiphum circumfectum* Buskton, at Kiev, found on the beet; (11) *Lygus pratensis* L. appears to winter in the adult form ; VASILIEV found this insect, in 1913, on the upper part of the root stock of rotted beets which had lain on the field through the winter ; on the 18th July 1914, eggs were found on a fennel stalk ; (12) *Piesma capitata* Wolff. : at Kiev. this insect had laid its eggs on the lower part of beet leaves in spring and summer ; there are 2 generations and the adults of the second hibernate ; on the 3rd August VASILIEV observed the insect feeding on the nectar of the mignonette ; (13) *Bibio hortulanus* L. and *Bibio marci* L. at Kiev, the former in small numbers, but

the latter in considerable quantities in April ; at Astrakhan both species appeared, and they were numerous throughout the government.

Among other insects injuring the beet, there were also observed, at Ekaterinodar, the " earth fleas " (*Halticini*) and the larvae of the cockchafer. Other insect pests of the beet are indicated above.

(B) Mustard. — At Astrakhan, *Plutella cruciferarum* Zell. injured this plant in the region of Jimkursk ; in June, about 2750 acres were destroyed ; the presence was also observed of: *Pieris daplidice* L., *P. rapae* L., *Colaphus sophiae* Schall., *Phyllotreta cruciferae* Goeze, *Athalia spinarum* Fabr., (*Pyrausta nubials*, at Kiev, was referred to above).

A list of 32 publications accompanies the paper.

824 – **Diaspids Collected in Southern Italian Somaliland.** — MALENOTTI ETTORE in *Redia*, Vol. IX, Part 2, pp. 321-358, Pl. VIII-X. Florence, March 24, 1916.

Description of the diaspids gathered in 1913 by the Stefanini-Paoli Scientific Mission, in Southern Italian Somaliland :

(1) *Aspidiotus* (*Evasp.*) *destructor* Sign. (= *A. transparens* Green, *A. translucens* Ckll.), on leaves of *Cocos nucifera*, at Merca, and on leaves of *Xylocarpus obovatus* near the mouth of the Djouba, June 1913; (2) *A.* (*Evasp.*) *cyanophylli* Sign., on leaves of *Manihot Glaziovii* at Djélib on the Djouba, June 1913; (3) *A.* (*Evasp.*) *orientalis* Newst. (= *A. osbeckiae* Green, *Chrysomphalus pedroniformis* Ckll.) on branches and fruits of *Calotropis procera* and on fruits of *Solanum arundo*, at Moukdicha, May 1913; (4) *Chrysomphalus rossi* (Mask.) Ckll. var. *ferrandii* Malen. n. var., on leaves of *Garcinia somalensis*, November 1913, at Lough, where the host goes by the name of " Ferrandi tree " ; (5) *C. Piceus* Malen. n. sp. very numerous on leaves of *Cassine Schweinfurthiana* (?), called by the natives " Calangcal ", at Aden Caboba, October 1913; (6) *Pseudaonidia quadriareolata* Malen. n. sp., on the bark of *Acacia Asak* at Allengo, September 1913; (7) *P. articulata* (Morg.) ( = *Selenaspidus articulatus* Morg.), on leaves of *Xylocarpus obovatus* at Djumbo, near the mouth of the Djouba, and on leaves of *Salvadora persica*, June 1913; (8) *Hemiberlesia fissidens* (Ldgr.) var. *constricta* Malen, n. var., on leaves of *Rhizophora mucronata* at Djumbo, near the mouth of the Djouba, 13th June 1913, and on leaves of *Hyphaene pyrifera* Beccari with *Chionaspis pseudo-nivea* Malen, n. sp. on the shore of El. Saï, 21st June 1913 ; (9) *Parlatoria* (*Websteriella*) *blanchardi* (Targ.) on date palms, at Merca, 6th June 1913 ; (10) *Dinaspis reticulata* Malen. n. sp., on leaves of *Dobera Macalusoi* at Quambatti, November 1913 and on both leaf faces of an undetermined member of the Capparidaceae, at Mallable, 28th July 1913 ; (11) *D. reticulata* var. *minor* Malen. n. var., on both leaf faces of *Balanites somalensis* near Matagassile, 24th September 1913 ; (12) *D. berlesei* Malen. n. sp., on the under surface of the leaf of a member of the Capparidaceae, perhaps of the genus *Cadaba*, at Biobahal, on the Djouba, 26th September 1913 ; (13) *Chionaspis usambarica* Ldgr., on the under surface of the leaves of *Xylocarpus obovatus* at the mouth of the Djouba, September 1913; (14) *C. elongata* Green, on the under surface of the leaves of *Cassine Holstii*, near Djeumbo, 12th June 1913 ; (15) *C. pseudo-nivea* Malen. n. sp. on leaves of *Hyphaene pyrifera*, with a

number of individuals of *Hemiberlesia fissidens* (Ldgr.) var. *constricta* Malen., on the shore of El Saï. 21st June 1913; (16) *C. paolii* Malen. n. sp., on the leaves of *Mariscus chactophyllus* at Bour-Meldac, 23rd July 1913; (17) *Lepidosaphes* (*Coccomytilus*) *somalensis* Malen. n. sp., on the trunk bark of *Acacia Asak* with *Pseudaonidia quadriareolata* Malen., at Allengo, September 1913.

825 – **Some Miscellaneous Economic Insects found in New Jersey.** — WEISS HARRY B. in *The Canadian Entomologist*, Vol. XLIII, No. 4, pp. 141-143. London, April 1916.

*Callopistria floridensis* Guen. ("Florida fern-cutworm"). — This insect, a lepidopteron already recorded by the Author as doing considerable damage to ferns in greenhouses, was found to be effectively controlled by spraying with fresh pyrethrum, one ounce to one gallon of water, plus one half ounce of soap. Also applied with a bellows with similar results.

*Phytomyza chrysanthemi* Kowarz ("Chrysanthemum leaf miner" or "marguerite fly"). — This insect does considerable damage to chrysanthemums in various greenhouses in northern New Jersey. The larvae mine the leaves. Nicotine solutions are effective against this insect, in place of the more or less unsatisfactory method of picking off and destroying infested leaves.

*Oberea tripunctata* Svederus ("dogwood twig-girdler"). — This coleopteron causes withering of the leaves of *Cornus florida* at the tip of the infested shoot. It is widely distributed in New Jersey, but as a rule does not occur in sufficient numbers to do any considerable damage.

*Hemichionaspis aspidistrae* Sign. — In many fern houses in New Jersey this scale insect is a dangerous pest. It is also continually introduced on Aspidistra plants imported from Belgium. There is no satisfactory remedy, and infested leaves are usually pulled off and destroyed during repotting or turning over the stock.

*Isisoma orchidearum* Westw. ("Cattleya fly"). — This Chalcid, known as the Cattleya fly, deposits one or more eggs in the buds of Cattleya, and development and pupation take place inside. The pest is found in practically all orchid houses of New Jersey where Cattleya species are grown, and is also continually introduced in orchids imported from South America. Fumigation with nicotine extracts is recommended to kill the adults.

*Aphrophora parallela* Say and *Cecidomyia resinicola* O. S. — Observed on pine trees in nurseries, but no injuries to the trees could be detected.

*Corythuca arcuata* Say. This lace bug is found on the leaves of oaks and other trees in various parts of New Jersey.

826 – ***Diplogaster labiata*** **n. sp. and** ***D. aerivora*** **n. sp., Nematode Parasites of** ***Saperda tridentata*** **and** ***Leucotermes lucifugus*****, in Kansas.** — MERRIL J. H. and FORD A. L. in *Journal of Agricultural Research*, Vol. VI, No. 3, pp. 115-127, Fig. 1-3. Washington D. C., April 17, 1916.

MEANS OF PREVENTION AND CONTROL

A description of the life cycle and habits of two new nematodes *Diplogaster labiata* and *D. aerivora*, found as parasites of *Saperda tridentata* Oliv. ("elm borer") and of the white ant *Leucotermes lucifugus* Rossi.

*D. labiata* lives in the digestive canal of *Saperda*. The numbers present therein are so large that the walls of the intestine are broken, the abdominal cavity is invaded, and the death of the insect caused.

The individuals of *D. acrivora* live as parasites in the cephalic region of *Leucotermes*; they are more numerous in the neighbourhood of the mouth parts. Their number ranges from 1 to 75 per insect.

Experiments undertaken in order to ascertain whether the nematodes can be introduced into the body of the *Leucotermes* and produce the parasitic affection artificially gave positive results. White ants brought into contact with cultures of nematodes in wet soil were infected and died in 12 days.

827 – **The Efficacy of *Aphelinus silvestrii* in Control of *Chrysomphalus dictyospermi*, in Sicily.** DE GREGORIO A. in *Nuovi Annali di Agricoltura siciliana*, Vth year, VIIth Series, Part I, pp. 18-19. Palermo, January-March 1916.

In confirmation of his previous observations (1) the writer reports that in the neighbourhood of Palermo he observed so considerable an increase of *Aphelinus silvestrii* that the latter almost completely destroyed the famous citrus scale insect *Chrysomphalus dictyospermi* for which he proposed the new name of *Aspidiotus agruminicola*. This scale insect has not yet entirely disappeared, but the hymenopteron, its natural enemy, has reduced it so such an extent that it no longer causes injury to the plants or their fruits.

828 – **Efficacy of Various Arsenical Preparations in Control of Insect Pests.** — BATTAIL J in *Le Progrès agricole et viticole*, 33rd year, No. 19: pp. 448-452. Montpellier, May 7, 1916.

The arsenic salts most in use as insecticides are: sodium arsenate, calcium arsenate, lead arsenate, copper arsenite, iron arsenate and copper arsenate. Their toxic action is in proportion to their content of arsenic. We have therefore:

| | | |
|---|---|---|
| Calcium arsenate . . . . . | 37.9 % | of arsenic |
| Lead " . . . . . | 16.7 " | " |
| Anhydrous sodium arsenate . . . . . | 36.0 " | " |
| Copper arsenite . . . . . | 34.5 " | " |
| Iron arsenate . . . . . | 33.6 " | " |
| Copper " . . . . . | 32.0 " | " |

This scale of values, however, is slightly modified in practice for several reasons, the chief of which are: the solubility of the arsenic salt, the formation of salts which act as though they were impurities and lower the percentage of arsenic in the compound, the presence of chlorides, and the addition of Bordeaux mixture for the purpose of controlling mildew at the same time.

Sodium arsenate is the most soluble, but its action is transitory, and it may seriously burn the green parts of the plants as soon as the dose of 1 per 1000 is exceeded; it is therefore only used in the preparationof the other arsenical compounds.

Calcium arsenate is the richest in arsenic and is also the most effec-

(1) See *B.* April 1915, No. 151. (*Ed*).

tive in application. It is obtained by the reaction of milk of lime on a solution of sodium arsenate, viz :

$$416 \text{ gm } [2Na_3 AsO_4] + 222 \text{ g } [3Ca(OH)_2] = 398 \text{ g } [Ca_3(AsO_4)_2] + 240 \text{ g } [6NaOH].$$

The result is 398 grams of arsenate of calcium and 240 grams of soda or 638 gr. of substances containing in all 150 gr. of arsenic, or 23.5 %.

The presence of the soda, which remains adhering to the leaves after evaporation, therefore reduces the toxic value of the compound 38 % $\left(\frac{23.5}{37.9}\right)$.

For the rest, a large proportion of the soda may be allowed to settle at the time of preparation, and if care is taken to use an sodium arsenate absolutely free from chlorides, the calcium arsenate will be superior to all other preparations of arsenic. The most suitable proportions are : 500 gr. of sodium arsenate and 200 gr. of fat lime or 380 gr. of calcium hydrate.

In arsenate of lead the toxic property of the arsenic is added to that of the lead, so that its insecticidal action is in no way inferior to that of arsenate of calcium, but it is much dearer and much more difficult to prepare. It is obtained by allowing a solution of lead acetate to react on sodium arsenate. The percentage of arsenic in the product is 10 %.

The copper arsenite is obtained by allowing trisodium arsenite to react on a solution of copper sulphate; the content of arsenic in the product is 17.4 %.

Finally, iron arsenate and copper arsenate are obtained by causing sodium arsenate to act on a solution of iron sulphate or sulphate of copper; the percentage of arsenic in the product is 17.2 and 16.9 respectively. In spite of the impurities which form in the preparation of the mixtures, calcium arsenate is therefore much more active in proportion than all the other preparations of arsenic.

The presence of chlorides weakens the properties of the insecticides. These chlorides may very well be contained not only in the arsenate of sodium, but also in considerable quantities in water, especially in well water (2.5 to 3 gr. per litre). It is therefore preferable to use running water as far as possible.

To the arsenical preparation Bordeaux mixture is often added, reducing its toxic action. In a 1 % mixture the weight of the precipitated hydrate of copper oxide is 385 grams per hectolitre; on the other hand, the arsenical mixture obtained with milk of lime and separated from the sodium water contains 398 gr. of arsenical precipitate with a content of arsenic of 37.9 % (150 gr.). By mixing the two precipitates, a total weight is obtained of 783 gr. with only 19 per cent of arsenic.

829 – **The Efficacy of Hot Water Treatment against "Cochylis and "Eudemis,,.** — TOPI MARIO in *Rendiconti delle sedute della Reale Accademia dei Lincei, Classe di Scienze fisiche, matematiche e naturali*, 5th Series, Vol. XXV, 1st Half Year, Part 7, pp. 524-528. Rome, April 2, 1916.

M. SEMICHON, who proposed this treatment, declared it effective against the eggs and larvae of *Conchylis ambiguella, Polychrosis botrana* and *Sparga-*

*nothis pilleriana*; against aphids, fungi with external mycelium (oidium) and the external fructifications of the fungi. The writer's experience was confined to the summer generation of *Conchylis* and *Polychrosis*, especially their eggs. Experiments were carried out both in the fields and the laboratory, chiefly with water at 55°-56° C. The results obtained lead to the conclusion that the proposed sprayings with hot water only, at such a temperature that it cannot injure the plant (1) are almost entirely ineffective against the eggs of *Polychrosis* and *Conchylis*. The effectiveness against the larva is very doubtful. In any case they could hardly be reached, being sheltered in the floral buds or even inside the grapes. Only an immersion for 10 minutes in water at 65° C. (probably even only at 55°), is found sufficient to sterilise the eggs. It does not appear possible to make any practical application of this result.

830 - **Bridge Grafting for saving Fruit Trees with Injuries due to Animals or Mechanical Causes.** — See No. 758 of this *Bulletin*.

INSECTS INJURIOUS TO VARIOUS CROPS

831 - ***Triaenodes bicolor* and *Hydrocampa nymphaeata* in the Rice Fields of the Province of Milan, Italy.** — SUPINO F. in *Rendiconti del Reale Istituto Lombardo di Scienze e Lettere*, Series II, Vol. XLIX, Parts II-III, pp. 108-114. Milan, 1916.

The study carried out in the rice fields of the environs of Milan in relation to the aquatic larvae which, according to farmers, caused more or less injury to rice, proved the existence of three different insects: *Stratiomys chamaleon* L., an absolutely harmless dipteron, and two injurious species, *Triaenodes bicolor* Curt. and *Hydrocampa* (*Nymphula*) *nymphaeata* L.

*Triaenodes bicolor* (order Neuroptera, sub-order Trichoptera, family Leptoceridae). — The larva of this insect cuts the leaves of aquatic plants for use as a sheath or cover and in the rice fields uses the rice leaves for that purpose, partly destroying them.

*Hydrocampa* (*Nymphula*) *nymphaeata* (order Lepidoptera, family Pyralidae, sub-family Hydrocampinae [Nymphulinae]). — This is one of the rare lepidoptera the larvae of which live in water; this larva also cuts the leaves to make a sheath for itself; but what is more important and renders it more injurious than that of the *Triaenodes*, is that it attacks not only the rice leaves, but also the young plants, feeding on them.

For control, it is advised to put carp in the rice field. They destroy a large number of the larvae, as was ascertained several times with certainty.

832 - ***Tychius quinquepunctatus*, a Coleopterous Pest of Beans in Apulia, Italy.** — G. GRANDI, in *Bollettino del Laboratorio di Zoologia generale ed a grraria della R. Scuola superiore d'Agricoltura in Portici*, Vol. X, pp. 103-119, Fig. 1-6. Portici, March 18, 1916.

In April 1915, there was an extensive invasion of *Tychius quinquepunctatus* L., in the bean fields of the commune of Ruvo di Puglia. The adults feed on the parenchyma of the soft leaves and young pods of the bean. Mating occurs in the first half of April, and the females oviposit in a hole or tunnel previously bored with their rostra in the wall of the pod. As soon

(1) Tests have shown that on thoroughly wet leaves with water at 65°C., burns are produced on the young and even on the adult leaves. (*Ed.*)

as the larvae hatch they gnaw away the outer seed cover, and through the caruncle or at any point of the seed they enter the cotyledons which they gnaw and crush easily with their strong biting jaws. The injury they thus cause is very serious, and in the case of extensive infestations the loss may be 50 % or even 75 % of the entire crop.

Unfortunately no natural enemies of this member of the *Curculionidae* are yet known. Resort must therefore be had to artificial means of control Among the most effective there are recommended : 1) disinfecting the ground by injections of carbon disulphide ; these injections must be made immediately after the crop, to the amount of 30 to 50 cc. of liquid per square metre ; this destroys the larvae and pupae, but care must be used and the necessary precautions taken in the neighbourhood of any trees ; 2) bean cultivation should be replaced by some other for some years; this is advisable when feasible economically, and may be made so if all the farmers of the region without exception arrange to take this step.

833 – ***Ligyrus fossator* and *L. fossor*, Coleoptera attacking Sugar Cane, in Brazil.** — *Chacaras e Quintaes*, Vol. XIII, No. 4, pp. 248-249, Fig. 1-83. St. Paul, April 15, 1916.

The northern States of the Brazil Union have for a long time deplored the grave injury caused to sugar cane plantations from time to time by coleoptera called " bezouros dos cannaviaes ", sometimes causing destruction of the crop. Dr. CARLOS MOREIRA, chief of the Laboratory of Entomology of the National Museum of Rio de Janeiro, was instructed by the Ministry of Agriculture to study these insects. His researches at Pernambuco proved that the " bezouros " of the sugar cane plantations are numerous, but that the most injurious of all is *Ligyrus fossator* Dejan, the larvae of which, called at Pernambuco " pão de gallinhas " because hens are very fond of them, live in the soil and gnaw all the rooted fragments of cane within their reach. This same parasite of the sugar cane has already been reported in French Guiana.

There are advised as means of control : 1) injections of carbon disulphide ; 2) flooding and subsequent drying of the soil ; 3) turning over the soil and collecting all the larvae by hand ; 4) use of light traps for capturing the adults.

A sure and cheap means for destroying a large of number of larvae is based on the fact that after heavy rains pools of water form in the lower parts of the plantation. The larvae beneath die of asphyxia. When the pool dries up, the larvae gather at its edges in search of moisture. They may then be destroyed in large numbers by burning straw at the point where the moisture has barely disappeared. In order to destroy the larvae farther away from the surface, the ground must be flooded or watered with distillery residue, or carbon disulphide injected.

At Allagoas the sugar cane is also injured by another coleopterous insect *Ligyrus fossor* Latr., which is controlled in the same way.

The sugar cane is also attacked by scale insects which live on the culm, chiefly beneath the leaf sheaths, and which cause extensive damage when they get near to the rooted cane fragment or pass into the roots. To destroy

these parasites a piece of cane must, before planting, be steeped in a solution of calcium sulphide of 5° Beaumé strength or a 2 % emulsion of soap and kerosene, for 15 minutes.

834 – **The Leopard moth (*Zeuzera pyrina*), a Dangerous Imported Insect Enemy of Shade Trees in the United States.** — HOWARD L. O. and CHITTENDEN F. H. in *United States Department of Agriculture, Farmer's Bulletin* 708, pp. 1-10, Fig. 1-4. Washington, D. C. February 14, 1916.

In the Hudson Valley and on the Atlantic seaboard, from Massachusetts to New Jersey, shade and ornamental trees and shrubs of many kinds, with the exception of evergreens, are severely injured by the larvae of the lepidopteron *Zeuzera pyrina* Fab. (*Z. aesculi* L., *Z. decipiens* Kirby), a European species accidentally introduced a short time since in the United States.

These larvae mine long tunnels in the living wood and stop growth to such an extent as to cause the death of the plant, especially in young trees.

In any case the presence of these tunnels weakens the trees, so that they are less able to withstand wind pressure, and also opens a path for other insects or germs of the most varied diseases.

The trees attacked are not only the horse chestnut, chestnut, walnut, oak, maple, alder, birch etc., but also fruit trees, such as pear, apple and plum trees, etc.

Some birds and mammals are among the most effective natural enemies of these insects.

Artificial means of control : 1) cutting and destroying the infested wood; 2) injecting carbon disulphide into the tunnels bored and afterwards blocking up the apertures very carefully ; 3) lighting very bright fires in those parts where the insects abound ; the pests will be attracted by the light and fall into specially arranged pans filled with water and petroleum.

835 – ***Pseudococcus citri, P. bakeri, P. citrophilus* and *P. longispinus* in the Citrus Plantations of Southern California.** — CLAUSEN CURTIS P. in *Agricultural Experiment Station, Berkeley, California*, Bulletin No. 258, pp. 1-48, 8 Fig. Berkeley, 1916.

Four species of *Pseudococcus* : *P. citri* Risso, *P. bakeri* Essig, *P. citrophilus* Clausen Mss. and *P. longispinus* Targ. are particularly injurious to citrus trees in Southern California, especially in the seaboard region, where the moisture and heat conditions favour their growth. On the other hand the outbreaks become more and more sporadic and rare in the interior.

(1) *P. citri* Risso. — First reported in 1880 in the county of San Diego whence later on it spread into the countries of Orange, Los Angeles, Ventura and Santa-Barbara. Owing to the considerable quantity of the juices which the adults take from the young branches and fruits, many leaves fall, and the fruits discolour and are very tardy in growth. At the time of flowering, the insect frequently causes fall of the leaves and the barely set fruit. The larvae likewise occasion extensive havoc. They extract the sap and chlorophyill from the leaf cells and secrete a large quantity of honeydew, thus occasioning the appearance of a rich cryptogamic vegetation (*Meliola Camelliae*) The latter clogs up the apertures of the stomata, which hinders the functions of the leaves.

The principal hosts of *P. citri* are *Asparagus officinalis*; *Strelitzia gigantea* (bird of paradise flower); *Callistemon lanceolatus* (bottle brush); *Bouwardia* sp.; *Umbellularia californica* (California laurel); *Cestrum* spp.; *Citrus medica* var. *genuina*; *Coffea arabica*; *Coleus Blumei*; *Columbium* sp.; *Gossypium peruvianum*; *Geranium* sp. (cranesbill); *Cucumis sativus*; *Ceanothus integerrimus* (deer brush); *Cordyline terminalis*; *Hedera Helix*; ferns; *Fuchsia* sp.; vine; *Passiflora edulis*; Jasmin; *Plumbago* sp. (leadwort); lemon tree; magnolia; *Ipomoea Bona-nox* (moonflower); nettle; *Solanum Douglasii* (nightshade); *Nerium Oleander*; orange tree; *Panax monstrosa*; *Paeonia* spp.; *Solanum muricatum*; *Phyllanthus carolinensis*; *Euphorbia pulcherrima*; *Citrus decumana* (pomelo); potato; *Solanum jasminoides*; gourd; *Passiflora violacea*; *Sequoia sempervirens* (redwood); *Begonia* sp.; *Tacsonia jasminoides*; tobacco; *Cyperus alternifolius* (umbrella plant) and *Zebrina pendula* (variegated wandering Jew).

(2) *P. bakeri* Essig. — Was first discovered on *Sambucus glauca* (elder) in the neighbourhood of Santa Paula, county of Ventura, whence it made its way into the counties of Santa Barbara, Los Angeles, Orange, San-Diego, Riverside and San Bernardino.

The injuries it occasions are the same as those of *P. citri*. The larvae and adults attack by preference the tender leaves full of sap, where they gather in numerous colonies.

Hosts: apple; *Aesculus californica* (buckeye); *Umbellularia californica*; *Aleurites triloba* (candlenut); *Agave americana*; *Coleus Blumei*; *Cestrum* sp.; *Cordyline terminalis*; *Sambucus glauca*; ivy; *Enterolobium* sp.; *Erigeron canadensis* (horseweed); Iris; *Cydonia japonica*; lemon tree; *Lilium Parryi* (lemon lily); *Phaseolus lunatus* (Lima bean); *Choisya ternata* (Mexican orange); nettle; *Solanum Douglasii*; orange tree; pear tree *Solanum jasminoides*; *Salix* sp.; *Helianthus annuus*; walnut; *Grevillea robusta* (silk oak).

(3) *P. citrophilus* Clausen Mss. — First appeared in 1913 near Uplands, county of San Bernardino. Was mistaken for *P. citri*, causing much anxiety to the local fruit growers. The injury it causes is never serious. It may at most occasion the fall of some flowers or young fruits of the lemon tree and discolouring of the orange tree fruit, but always to a very limited extent.

Hosts: *Azalea*; *Rubus villosus*; *Ficus pumila* (climbing fig); fig tree; ivy; heliotrope; lemon tree; orange tree; mallow; *Choisya ternata*; *Brassica nigra*: *Solanum Douglasii*; *Schinus Molle* (pepper tree); *Chenopodium album* (pigweed); walnut; *Melilotus alba*; potato; *Rubus nutkanus*; rose bush; rhubarb; *Lolium perenne*; *Grevillea robusta*; *Helianthus annuus*. All these plants are not equally frequented. The presence of *Ps. citrophilus* is rather rare on some of them. Others, however, such as the potato, rhubarb and *Grevillea* are more often attacked than citrus plants.

(4) *P. Longispinus* Targ. — Common throughout Southern California, in the counties of Santa Barbara, Ventura, Los Angeles, Orange and San Diego.

Hosts: *Begonia* spp.; *Strelitzia gigantea*; *Richardia africana* (calla);

*Aleurites triloba* ; *Agave americana* ; *Cineraria cruenta* ;*Citrus medica* var. *genuina* ; *Coleus Blumei* ; *Epiphyllum* spp. (crab cactus) ; *Croton Tiglium* ; *Cordyline terminalis* (dracaena) ; ferns ; fig tree ; *Flacourtia sepiaria* ; *Fuchsia* spp. ; *Erythea edulis* (Guadeloupe island palm) ; *Psidium Guajava* (guava) ; lemon tree, mango tree ; *Ipomoea Bona-nox* ; *Nephrodium amplum* ; *Nerium Oleander* ; *Opuntia* spp. ; *Phormium tenax* var. *variegatum* ; plum tree ; *Cycas revoluta* ; *Platycerium* spp. ; *Stangeria schizodon* ; *Sterculia Gregori* ; *Cyperus alternifolius* ; *Zamia* spp. Chiefly tropical and subtropical species introduced into California as ornamental plants.

*Cordyline terminalis* (dracaena) is chiefly injured by the adults, which sometimes gather in large numbers on the terminal buds and prevent growth.

Among the natural enemies of these species of Pseudococcus in California, there are : 1) *Symphrobius californicus* Banks (brown lacewing); the female lays its eggs on the leaves and the fruits of the infested citrus plants, and the larvae emerging, like the adults, destroy a large quantity of *Pseudococcus* ; 2) *Leucopis bella* Loew, the only really effective natural enemy of *P. citrophilus* ; 3) *Cryptolaemus montrouzieri* Muls. : spreads very slowly and with difficulty, and can only live in a few very limited coast localities where it finds the conditions of moisture and temperature needed for its growth ; 4) *Chrysopa californica* Coq. (green lacewing) : its larvae attack the larvae and adults of *Pseudococcus* ; 5) *Scymnus guttulatus* Lec. and *S. bipunctatus* Kugel : the latter was imported from the Philippines in 1910 and is now found in the counties of Ventura and Santa Barbara ; 6) *S. marginicollus* and *S. sordidus* Horn : the latter is the most effective species of *Scymnus* in controlling *Pseudococcus* ; 7) *Chrysoplatycerous splendens* How., introduced from the Philippines into the county of San Diego and at present spread throughout Southern California.

Fumigation with hydrocyanic acid, and applications of various anti-fungus preparations, may give good results, but the best have been obtained by simple jets of water under high pressure at the rate of 44 to 66 gallons of water per plant.

836 – **The Woolly Whitefly (*Aleurothrixus Howardi*) in Florida Citrus Plantations.** – WATSON J. R. in *University of Florida, Agricultural Experiment Station*, Bulletin No. 126, pp. 81-102. Tallahassee, Fla., 1915.

*Aleurothrixus howardi* Quaintance, which was very probably imported from Cuba, was discovered for the first time in Florida in the neighbourhood of Tampa, in the autumn of 1909. In 1914 it had already reached the counties of Hillsborough, Pinellas, Manatee, Polk and De Soto, and will soon end in becoming common in all the citrus plantations of Florida.

*Aleurothrixus* causes damage in three ways to the plants attacked : 1) removal of juice from the tissues, causing the withering of the plant ; 2) secretion of a honeydew which covers the leaves and fruits and forms a good medium for the growth of *Meliola Camelliae* and other fungi hindering the functions of the leaves and rendering washing of the fruit necessary ; 3) the colonies of *Aleurothrixus* are a centre of attraction for the " purple scale " (*Lepidosaphes beckii*) so injurious to citrus plants.

Among natural enemies, "red fungus" (*Aschersonia Aleyrodis* Webber) and "brown fungus" (*Aegerita Webberi* Fawcett) grow badly on the *Aleurothrixus* and certainly cannot prevent its spread. The writer found on some dead larvae a *Cladosporium* (in the proportion of 80 %) which he considers to be the direct cause of their death, although he was not able to verify his hypothesis by inoculating living larvae with pure cultures.

The most effective and active natural enemy, however, is undoubtedly a small hymenopteron (*Eretmocerus haldemani*) the female of which lays its eggs in the body of the larvae or pupae of *Aleurothrixus*. The latter are then killed by the larvae hatching out of the eggs in their bodies.

As regards artificial means of control, good results are obtained by applying oily mixtures in the early days of March, the first half of June, about the middle of August and the beginning of November, when the parasites are in their early stages of development and more sensitive to insecticidal action.

The following formula is advised: to 8 lbs. whale oil soap add 2 galls. of fine paraffin oil, stirring vigorously all the while so that the whole is well emulsified. Add 1 gall. of water to the emulsion, stirring as before. Dilute emulsion to make 200 galls. of spray solution.

837 – ***Icerya purchasi* in Florida, United States.** — WATSON I. R. in *University of Florida, Agricultural Experiment Station, Report for* 1914, p. 55. Tallahassee, Fla., 1916.

*Icerya purchasi* has continued to spread with continually greater rapidity. From August 1913 to March 1914, it was discovered in the following localities: St. Cloud, Key West, Odessa (Pasco County), Terra Ceia Island, Palmetto, Leesburg, Tavares, Ashton and Narcoosee.

The damage has been very serious, especially at Key West, where *Icerya* even attacks *Bursera Simaruba* (gumbo-limbo). This plant must be added to the list of hosts of this scale insect.

838 – ***Bombyx Pini*, a Spanish Pest of Pine** (1). — MIRA JENARO in *Revista de Montes*, XLth year, No. 040, pp. 193-202, Madrid, March 15, 1916.

Reference is made to the extensive damage caused by *Liparis processionea* and *Bombyx pini* in the pine forests of the "Dehesa de la Albufera": the particulars given chiefly concern the latter insect.

Many trees entirely defoliated perished rapidly, especially in hot and moist regions where transpiration is more intense.

The control of the insects was undertaken by means of active and well organised measures, owing to which, by the resort to every available means, an enormous quantity of adults and larvae were destroyed, thus saving a considerable number of pines from certain destruction.

The following were the most effective means used:

1) Direct control by removal and destruction of the nests of the insects; hanging out white cloths at night, covered with a sticky substance and strongly illuminated; the adults, attracted by the light, are caught on the cloth;

(1) See also *B.* Jan. 1916, No. 136. (*Ed.*)

2) Spraying on the youngest, which are the easiest to get at, arsenate of sodium and quicklime, which safeguards the plants against further attacks (arsenate of sodium, 10.5 to 12.2 oz ; quicklime, 2.2 lbs ; water 22 galls.) ;

3) Coating the pine trunks over a more or less extensive area with a sticky pitch substance. The larvae coming down from the tree and those climbing up in search of food stop in front of the coated belt and can easily be destroyed. This is a very practical and easy method of control.

839 - ***Lyda hypotrophica*, a Hymenopterous Pest of Epicea in the Forests of Roggenburg, Germany.** — Parts in *Zeitschrift für angewandte Entomologie*, Vol. 3, No. 1, pp. 75-96. Berlin, March 1916.

A very detailed description is given of the occurrence of *Lyda hypotrophica* Htg. (= *Cephaleia abietis* L.) in the forest of Roggenburg (Suabia) and the damage it has occasioned of recent years. These data are based on observations made in the Royal Forest District of Breitenthal, but they are so characteristic that they may be considered as being likewise typical for the whole of Suabia.

In August 1911, in a stand of epicea 119 years old, in the southeast part of the said forest, many trees were remarked with their tops and side branches entirely stripped of needles. This fact was at first put down to the excessively dry weather in that year, but on felling some trees later, it was found to be caused by injury due to *Lyda hypotrophica*. In the month of September following, all the stands attacked where the insect was likely to be sheltered were studied, and the quantity of larvae contained in the soil was determined in 323 plots of 1 square metre each distributed over different points. It was found, in accordance with the literature of the subject, that stands of 60 to 120 years had suffered most, both with regard to infested area and number of larvae.

The chief object of these experiments was to determine how widespread was the occurrence of the insect in the forest. As however the majority of the larvae generally live in that part of the soil which is shaded by the largest trees, the latter were almost exclusively used for the experiments. The result is that this method only supplies maximum figures as to the presence of the larvae.

When in 1912 the Writer took over the management of the forest district of Breitenthal, he hastened to obtain average figures as to the presence of larvae in the soil. He not only selected the plots in all parts of the forest, but he more than trebled their number. This was the more necessary, inasmuch as the first experiments had exhibited great variations in the number of larvae, even per unit of shaded area. There had been found in one district 2083 larvae per square metre of shaded area, while in another the number was only 480.

These experiments have shown that no stand throughout the total extent of the Royal forest district comprising 5683 acres was free from larvae, independently of the age of the trees. One stand alone showed an increase in the average number as compared with 1911 ; generally this num-

ber in the different districts was below that of 1911. The reduction was at first put down to exceptional circumstances.

In order to secure exact data, the experiments were continued in the spring of 1913, on the same number of plots as in 1912. The number of larvae had again diminished.

The results obtained in the autumn of 1911, in March and April 1912, and in March 1913 for all the stands showing 200 or more larvae on the area shaded by one tree were compared with each other.

It was found that taking as a basis the number of larvae found in 1911 = 100, this number had fallen off 19.5% for the spring of 1912 and 47.5% for the spring of 1913.

From this it is evident that the number of larvae decreased in the course of the year observed by the Writer.

Control measures were only undertaken in 1913; therefore the reduction was due to natural factors. LANG has shown that in the forests of Upper Franconia, the larvae of *Raphidia ophiopsis* can attack the eggs and young larvae of *Lyda*. Yet the reduction in the number of *Lyda* could not be put down to this enemy, as it was only rarely found in the excrement of the insect. Traumatic causes, such as injury to the larvae, were also not responsible for the reduction in number. Nor were there more parasites, as it was observed in 1912-1913 that a large number of larvae shut up for several weeks contained only a small number of ichneumonidae. The Writer however, at the end of 1914, found ichneumonidae in some parts of the forest in no less numbers than the *Lyda* flying in June. The outbreak of war however prevented him from ascertaining whether these ichneumonidae were connected with the appearance of *Lyda*. Quite possible there is a connection, as BAER claims to have observed that the ichneumons (*Polycinetis aethiops*) attack the almost full-grown larvae of *Lyda*.

The damage caused by *Lyda* to the epicea population of the forest of Roggenburg was very great, but not sufficient to bring about the death of the trees. The tops which were bare the spring of 1912 regained their greenness, and in the following year the damage had to a great extent disappeared. Only the branches in the lower part and interior of the tree top, where the sunlight is very feeble, retained their bare appearance. Other circumstances, such as the presence of a large number of *Bostrichids*, were not observed. It was likewise not possible to determine to what extent the growth of the trees had suffered through the influence of the insect. The increase in size depends primarily on the length of time during which the insect carried out its destructive work. It is generally supposed that the larva destroys the needles during June, July and the beginning of August and afterwards shelters in the ground. It is pointed out that this observation is only partly correct. There are some larvae which remain longer on the tree than others. In one case, the Writer observed that certain larvae continued to destroy the needles right up to December.

For effective control of *Lyda* it is essential to know in good time when they will fly. On the occasion of the flight in Upper Franconia it was observed that the larva of *Lyda* undergoes no external change before con-

version into a pupa. The skin of the larva only shrank a few days before it burst. It is pointed out that these changes were never observed by the Author, though he studied thousands of larvae. More precise indications on this question were given by SCHEIDTER, who found that the larvae which have attained complete maturity show deep black oval spots above the eyes, visible to the naked eye, which represent the eyes of the future pupa ; they are called " Puppenaugen " (pupal eyes ). In the months of April, May and June 1913, on the basis of this character there were examined 11 800 larvae from 8 different stands, and the number of those ready for transformation into pupae determined. It was found that this criterion is only partly correct. " Pupal eyes " do not appear only before conversion into pupal form, but as early as the previous autumn or summer. The larvae were found with pupal eyes in the month of August 1913.

This fact is important in practice, as by its aid it may be determined in the autumn whether or not there will be a great flight of *Lyda* in the following spring.

While observing the evolution of larvae into pupae the writer also ascertained the number of pupae in the above stands. Within a few weeks alone he found great variations in the number, which variations occurred at all points at the same time. The cause is probably the weather, which exerts an influence on the transformation. A high temperature in April is found to favour the formation of pupae.

The perfect insect emerges very early from the soil, the emergence appearing also to be related to the weather. If the weather is rainy and foggy, only a small number of adult insects are found, while on fine days they come out in large numbers. According to the writer mating generally takes place on the ground, on the leaves of *Gramineae* and very rarely in the crown of the tree.

With regard to *Lyda* control commenced in the forest of Roggenburg, the Author remarks as follows ; glue bands at a height of about 5 feet above the ground proved very successful at the beginning of flight. The female insects rarely reach the summit flying, most of them climbing up the tree.

Later on, when the weather allowed the insects to emerge in large numbers, and the ovaries of the females were full of eggs, the females traversed the band of glue without being captured. This observation is in contradiction with those of many investigators, and therefore the studies should be continued. The writer also made experiments with fly-papers and obtained excellent results. The high cost of this method of control however prevented him from repeating the experiments on a large scale. In any case they showed that a substance must be used with the properties of the glue used for catching flies if it is desired to obtain good results with glued bands or strips for controlling *Lyda*.

ALFREDO RUGGERI, *gerente responsabile.*

(*c*) Publications of the Bureau of Agricultural Intelligence and Plant Diseases.

1. LE SERVICE DE PROTECTION CONTRE LES MALADIES DES PLANTES ET LES INSECTES NUISIBLES DANS LES DIVERS PAYS (The Present Organization of the Services for the Control of Plant Diseases and Insect Pests in the Different Countries). (1914, 350 pages, 4to) . . . . . Frs. 4.00
2. PRODUCTION ET CONSOMMATION DES ENGRAIS CHIMIQUES DANS LE MONDE (Production and Consumption of Chemical Manures in the World). (Second Edition, 1914, 162 pages, 5 diagrams, 2 maps, 16mo) . . . . . » 3.50

(*d*) Publications of the Bureau of Economic and Social Intelligence.

1. L'ACTIVITE DE L'INSTITUT INTERNATIONAL D'AGRICULTURE DANS LE DOMAINE DE LA COOPÉRATION, DE L'ASSURANCE ET DU CRÉDIT AGRICOLES (The Work of the International Institute of Agriculture in the Field of Agricultural Co-operation, Insurance and Credit). (In French, German and Italian). (1912, 34 pages, 16mo) . . . . . » 0.50
2. MONOGRAPHS ON AGRICULTURAL CO-OPERATION IN VARIOUS COUNTRIES, Vol. I. (1911, 451 pages, 16mo). (In English and French) . . . . . » 3.50
   Do. Vol. II. (1915, 213 pages 16mo). (In English and French) . . . » 3.50
3. AN OUTLINE OF THE EUROPEAN CO-OPERATIVE CREDIT SYSTEMS (Second Edition, 1913, 72 pages, 16mo) . . . . . » 0.50
4. L'ORGANISATION DE LA STATISTIQUE DE LA COOPÉRATION AGRICOLE DANS QUELQUES PAYS (The Organization of the Statistics of Agricultural Co-operation in certain Countries). (1911, 163 pages, 8vo) . . . . . 1.50
5. L'ASSURANCE-GRÊLE DANS QUELQUES PAYS ET SES PROBLÈMES (Insurance against Hail in some Countries and its Problems). (1911, 110 pages, 8vo) . . » 1.50
6. AGRICULTURAL CREDIT AND CO-OPERATION IN ITALY: SHORT GUIDE TO RURAL CO-OPERATION IN ITALY (in English, 35 pages and in Italian, 34 pages, 16mo) . . . . . » 0.25

(*e*) Other publications.

1. L'INSTITUT INTERNATIONAL D'AGRICULTURE, SON ORGANISATION, SON ACTIVITÉ, SES RÉSULTATS (The International Institute of Agriculture, its Organization, Activity, and Results). (1914, 31 pages, in English, French and Italian; illustrated) . . . . . Frs. 1 —
2. LOUIS-DOP: LE PRÉSENT ET L'AVENIR DE L'INSTITUT INTERNATIONAL D'AGRICULTURE (CONFÉRENCE) (Present and Future of the International Institute of Agriculture) (Address). (1912, 60 pages, 16mo). . . . . » 1 —
3. SANTIAGO ALDUNATE: EL INSTITUTO INTERNACIONAL DE AGRICULTURA Y SU IMPORTANCIA PARA LA AMÉRICA LATINA, EN ESPECIAL PARA CHILE (Conferencia) (The International Institute of Agriculture and its Importance for Latin America, especially for Chile). (1913, 30 pages, 16mo) (Address). . . . » 1 —

## II. Publications not for Sale.

1. CONFÉRENCE INTERNATIONALE DE 1905 POUR LA CRÉATION D'UN INSTITUT INTERNATIONAL D'AGRICULTURE (International Conference of 1905 for the Foundation of an International Institute of Agriculture), (1905, 254 pages, 4to).
2. ACTES DES ASSEMBLÉES GÉNÉRALES DES ANNÉES 1908, 1909, 1911, 1913 (Proceedings of the General Assemblies of 1908, 1909, 1911 and 1913). (Four volumes, 8vo., one 16mo).
3. PROCÈS-VERBAUX DU COMITÉ PERMANENT DES ANNÉES 1908, 1909, 1910, 1911, 1912, 1913 (Procès-verbaux of the Permanent Committee, 1908, 1909, 1910, 1911. 1912, 1913, 1914 and 1915). (Five volumes, 8vo., and two 16mo).
4. RAPPORTS ET ETUDES DU BUREAU DE LA STATISTIQUE GÉNÉRALE (Reports and Studies of the Bureau of General Statistics). (1911, 260 pages, 8vo).
5. THE SCIENCE AND PRACTICE OF FARMING DURING 1910 IN GREAT BRITAIN. (646 pages, 16mo).
6. ETUDE SUR LES RECENSEMENTS DE LA POPULATION AGRICOLE, LES SALAIRES DE LA MAIN-D'ŒUVRE RURALE ET LES COURANTS D'ÉMIGRATION DANS LES DIFFÉRENTS ETATS (Study on the Census Returns of the Agricultural Population, the Wages of Rural Labour, and the Currents of Emigration in the Several Countries). (1912, 150 pages, 8vo).

NOTE.

(1) All subscriptions and remittances for the Institute's publications should be made either directly to the International Institute of Agriculture, Rome, or to the principal booksellers.

For Great Britain and Ireland, subscriptions to the Bulletins 1, 2, 3 and remittances for the Year Books are also received at the Board of Agriculture and Fisheries, 4 Whitehall Place, London. S. W.

(2) The prices quoted include packing and carriage. All our publications are despatched on receipt of postal order or international reply coupons.

(3) Despatch is made with every care and punctuality, but unregistered volumes travel at consignee's risk.

(4) To avoid mis-carriage, for which the Institute does not hold itself responsible, an additional amount of 25 centimes for registration should be sent with each order.

(5) In case of change of address, the subscriber is requested to notify the Publishing Bureau of the Institute, forwarding address label.

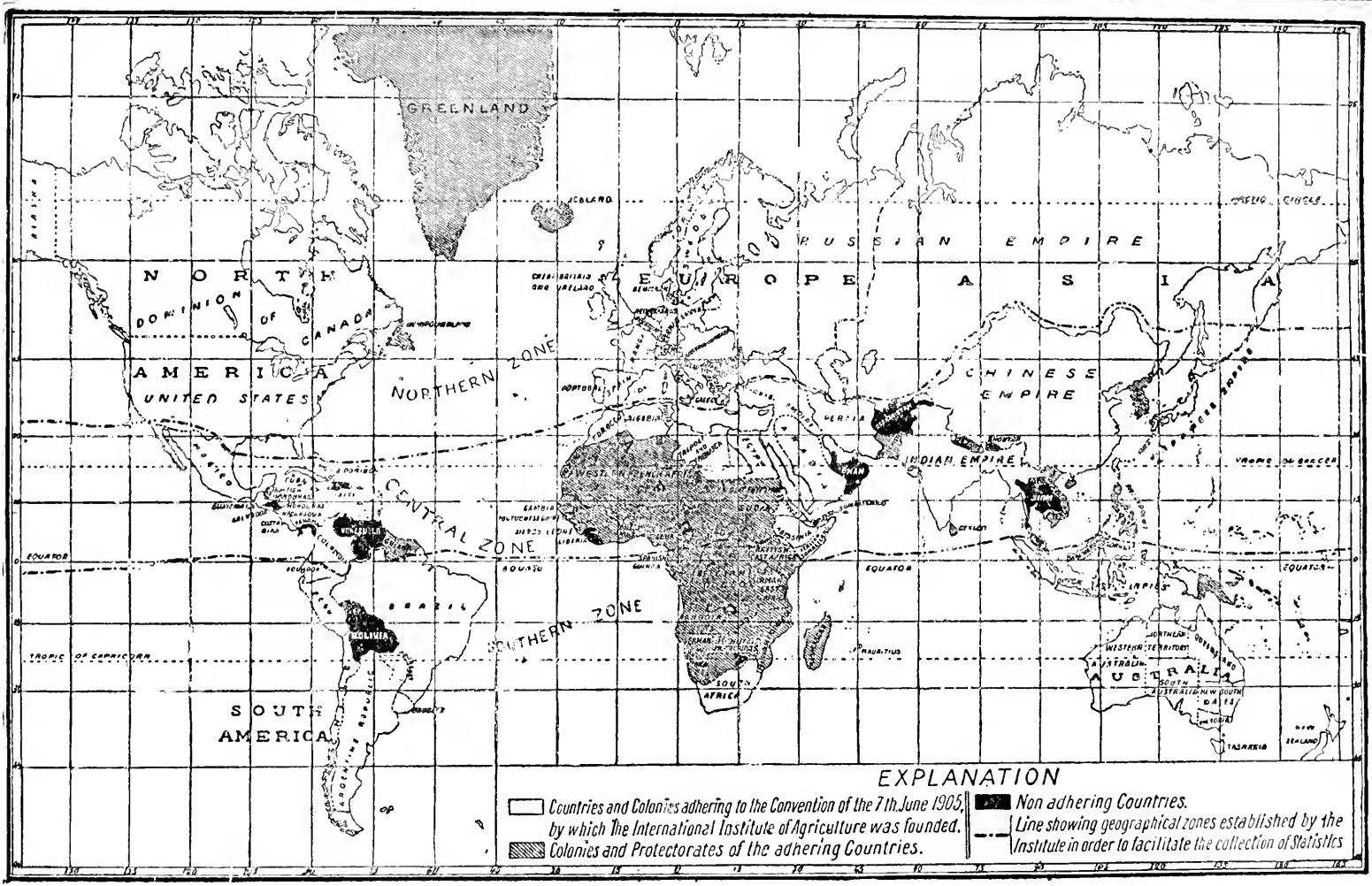
GREENLAND
ICELAND
NORTH AMERICA
DOMINION OF CANADA
UNITED STATES
NORTHERN ZONE
CENTRAL ZONE
SOUTHERN ZONE
EQUATOR
TROPIC OF CAPRICORN
SOUTH AMERICA
BRAZIL
BOLIVIA
COLOMBIA
EUROPE
RUSSIAN EMPIRE
ASIA
CHINESE EMPIRE
INDIAN EMPIRE
PERSIA
SIAM
WESTERN AFRICA
SOUTH AFRICA
MAURITIUS
AUSTRALIA
NEW ZEALAND
TASMANIA
EXPLANATION
Countries and Colonies adhering to the Convention of the 7th June 1905, by which The International Institute of Agriculture was founded.
Colonies and Protectorates of the adhering Countries.
Non adhering Countries.
Line showing geographical zones established by the Institute in order to facilitate the collection of Statistics

INTERNATIONAL INSTITUTE OF AGRICULTURE
BUREAU OF AGRICULTURAL INTELLIGENCE AND PLANT DISEASES

# INTERNATIONAL REVIEW OF THE SCIENCE AND PRACTICE OF AGRICULTURE

## MONTHLY BULLETIN OF AGRICULTURAL INTELLIGENCE AND PLANT DISEASES

YEAR VII. - NUMBER 8
AUGUST 1916

ROME
PRINTING OFFICE OF THE INSTITUTE
1916

# Publications of the International Institute of Agriculture.

## I. Publications for Sale.

### A. — *MONTHLY OR WEEKLY PUBLICATIONS.*

| | Annual subscription | Single number |
|---|---|---|
| 1. INTERNATIONAL CROP REPORT AND AGRICULTURAL STATISTICS (*Bulletin of Agricultural and Commercial Statistics*), published monthly in English, French, German, Spanish and Italian, 16mo | Frs. 6 | 0,60 |
| 2. INTERNATIONAL REVIEW OF THE SCIENCE AND PRACTICE OF AGRICULTURE (*Monthly Bulletin of Agricultural Intelligence and Plant Diseases*), published monthly in English, French, German, Spanish and Italian. (Each number consists of about 180 pages, 16mo) | » 18 | 2 — |
| 3. INTERNATIONAL REVIEW OF AGRICULTURAL ECONOMICS (*Monthly Bulletin of Economic and Social Intelligence*), published monthly in English, French, German, Spanish and Italian. (Each number consists of about 150 pages, 16mo) | » 18 | 2 — |
| Subscription to all three Bulletins | » 36 | |

### B. — *YEAR BOOKS.*

| | | |
|---|---|---|
| 1. ANNUAIRE INTERNATIONAL DE STATISTIQUE AGRICOLE POUR 1910 (International Year Book of Agricultural Statistics, 1910). (1912, XLVIII + 327 pages, 16mo) | Frs. | 5 — |
| Do. Vol. II, Years 1911-1912. (1914, XXXIV + 624 pp. 16mo) | » | 5 — |
| Do. Vol. III, Years 1913-1914. (1915, XLIV + 788 pp. 16mo) | » | 5 — |
| 2. ANNUAIRE INTERNATIONAL DE LÉGISLATION AGRICOLE, 1st. Year, 1911, (International Year Book of Agricultural Legislation, 1911). (1912, 1,122 pages, 16mo) | » | 10 — |
| Do. 2nd Year, 1912. (1913, 994 pages, 16mo) | » | 10 — |
| Do. 3rd Year, 1913. (1914, 1,114 pages, 16mo) | » | 10 — |
| Do. 4th Year, 1914 (1915, LXVIII + 1,020 pages, 16mo) | » | 10 — |
| Do. 5th Year, 1915 (1916, LXXVXVI + 1,460 pages, 16mo) | » | 10 — |

### C. — *OTHER PUBLICATIONS.*

#### (*a*) Publications of the Library.

| | | |
|---|---|---|
| 1. CATALOGUE DE LA BIBLIOTHÈQUE. ANNÉE 1909 (Catalogue of the Library, 1909). (356 pages, 8vo) | Frs. | 3 — |
| 2. LISTE DES REVUES ET JOURNAUX RÉGULIÈREMENT REÇUS PAR L'INSTITUT, 1913 (List of Reviews and Papers regularly received by the Institute, 1913). (84 pages, 16mo) | » | 0.50 |

#### (*b*) Publications of the Bureau of Statistics.

##### (1) *Various publications*

| | | |
|---|---|---|
| 1. L'ORGANISATION DES SERVICES DE STATISTIQUE AGRICOLE DANS LES DIVERS PAYS, Vol. 1 (The Organization of the Agricultural Statistical Services in the Different Countries, Vol. I). (1910, 446 pages, with tables in addition to the text, 16mo) | » | 4 — |
| Do. Vol. II. (1913, 146 pages, 16mo) | | 2 — |
| 2. RECUEIL DE COEFFICIENTS POUR LA CONVERSION DES POIDS, MESURES ET MONNAIES AU SYSTÈME MÉTRIQUE DÉCIMAL (Collection of Coefficients for the Conversion of Weights, Measures, and Money Values into the Decimal Metric System). (1914, 84 pages, 32mo) | » | 1 — |

##### (2) *Monographs (New Series).*

| | | |
|---|---|---|
| 1. L'ORGANISATION DE LA STATISTIQUE DU COMMERCE EXTÉRIEUR EN ITALIE (Organisation of the Statistics of Foreign Trade in Italy). (1913, 190 pages 16mo) | | 2 — |
| 2. LE MARCHÉ DES CÉRÉALES D'ANVERS (The Antwerp Corn Market) (1913, 62 pages, 16mo) | » | 1 — |
| 3. LES BOURSES DES PRODUITS AGRICOLES DE HAMBOURG ET BUDAPEST (The Agricultural Produce Exchanges of Hamburg and Budapest). (1913, 55 pages, 16mo) | » | 1 — |
| 4. NOTES SUR LES STATISTIQUES DU COMMERCE EXTÉRIEUR DANS LES DIFFÉRENTS PAYS: Publications Statistiques, Territoires, Sortes de Commerce, Provenances et Destinations des Marchandises (Notes on the Statistics of Foreign Trade in the Different Countries : Statistical Publications, Territory, Kinds of Trade, Source and Destination of Goods). (1914, 96 pages, 16mo) | » | 2 — |
| 5. LA RÉPARTITION AGRICOLE DES TERRITOIRES DES DIFFÉRENTS PAYS (Areas under Crops in the Different Countries). (1914, 310 pages, 16mo) | » | 5 — |

##### (3) *Other publications.*

UMBERTO RICCI : LES BASES THÉORIQUES DE LA STATISTIQUE AGRICOLE INTERNATIONALE (Theoretical Bases of International Agricultura. Statistics),

INTERNATIONAL INSTITUTE OF AGRICULTURE
BUREAU OF AGRICULTURAL INTELLIGENCE AND PLANT DISEASES

# INTERNATIONAL REVIEW OF THE SCIENCE AND PRACTICE OF AGRICULTURE

MONTHLY BULLETIN
OF AGRICULTURAL INTELLIGENCE AND PLANT DISEASES

YEAR VII. - NUMBER 8
AUGUST 1916

ROME
PRINTING OFFICE OF THE INSTITUTE
1916

*In quoting articles, please mention this BULLETIN.*

# CONTENTS

## III. — LIVE STOCK AND BREEDING.

### *a*) GENERAL.



### *b*) SPECIAL.

## IV. — Farm Engineering.



## V. — Rural Economics.



## VI. — Agricultural Industries.



# PLANT DISEASES.

## I. — General Information.



## II. — Diseases not due to Parasites, or of unknown origin.

## III. — Diseases due to Bacteria, Fungi and other Lower Plants.



## IV. — Weeds and Parasitic Flowering Plants.



## V. — Injurious Insects and other Lower Animals.





The Editor's notes are marked (*Ed.*).

FIRST PART.

# ORIGINAL ARTICLES

## Industrial Retting of Textile Plants by Microbiological Action

by

Prof. GIACOMO ROSSI

*Director of the Institute of Agricultural Bacteriology in the Royal Higher School of Agriculture at Portici, Italy.*

The search for a *retting method based on bacterial action* is due largely to the defects existing in the methods commonly used in rural districts, and also to the deficiencies in the chemical methods by which it was sought to replace them.

The many chemical methods (all reducible no doubt to a single type and aiming solely at dissolution of the interfibrous substances by means of a reagent, the excess of which is afterwards neutralised and disposed of without injury to the fibres themselves) are by the very conditions of the problem incapable of yielding very satisfactory or constant results, for two main reasons, one based on the anatomical nature of the textile fibres, and the other on their chemical composition.

The anatomical impediment lies in the fact that all the stalks the fibres of which are to be separated are not of quite the same age, and the fibres are consequently not of the same thickness.

Therefore the quantity of intercellular matter to be dissolved likewise cannot be the same in every respect.

Hence, there may be an excess or deficiency of reagent, but this would not matter, as the easiest course, that of an excess of reagent, might likewise be adopted. This method might be adequate if the impracticability of devising a specific reagent for the intercellular substances, *i. e.* one which would attack the pectic materials exclusively without occasioning any injury whatever to the cellulose of the fibres, did not render the successful application of chemical methods impossible.

From the basis of our knowledge of the macrochemistry and microchemistry of the intercellular substances it appears impossible to devise

this specific reagent. It may be contended that in view of the affinity between pectic substances and carbohydrates any reagent attacking the former strongly must necessarily attack the latter, at any rate slightly. If in order to surmount this difficulty an insufficient quantity of reagent were employed, the resulting separation of the fibres might be insufficient. That is why all chemical means tend to break up the fibre. A similar defect is obviously inherent in ordinary microbiological methods, *i. e.* those practised in rural districts for retting purposes.

In these latter it is not only the bacteria of pectic fermentation which multiply, but also other bacteria, chiefly those of cellulose fermentation. This happens so easily that there is the risk of the fibres being injured in the same way as by the action of a chemical reagent common to the two substances.

If it so happens that specific pectic bacterial ferments develop exclusively, or predominate over the others for some length of time, it may be assumed that microbiological retting will take place without any drawbacks; but in this case only. Moreover, it is still necessary to stop the retting process by taking the textile materials out of the liquids in which they are steeped when the necessary limit has been reached. This is not always easy, as it is by no means rare for a lot of hemp or flax to be classified as " over-retted ", depreciating markedly in consequence; the most able peasants may make mistakes in this respect. This being the case, nothing but a ferment, fixed or soluble, specific to the pectic substances, acting in *pure culture* if it is an organism and alone if it is an enzyme, would overcome all the difficulties, because the degree of sensitiveness required for this very special problem can only be obtained from a biological action.

With the help of other workers I showed that there are micro-organisms which attack plant tissues but leave the cells and their derivatives intact. Thus, on preparing a culture of *Bacillus Comesii* in the presence of a leaf of *Medicago lupulina* or *Coronilla Emerus* (sterilised by means of special methods leaving the leaf chemically intact), these leaves are decomposed into 3 parts:

(*a*) the parenchyma cells which fall to the bottom of the medium;
(*b*) the sclerenchyma, which remains intact in skeleton form;
(*c*) the epidermis, which floats on the liquid.

This decomposition goes no farther. By preparing a culture of the same bacillus in the presence of wisps of hemp, under the same conditions as the leaves, the dissociation of the stalk into its three parts is secured: wood, textile bast-fibres and cells of the cortical layers. All these parts, however, and what is more important, the fibres, may be kept in the presence of the still living bacteria for as long as 2 years without being attacked and even without the breaking-up of the primary fibre. The cellulose wall thus cannot serve as food material for these bacteria.

All these facts (utilised in the method of retting bearing my name) constitute the *pectic fermentation* referred to above.

The proposed microbiological methods of retting are many, but can be brought under 2 heads: 1) those in which the addition of a selected fer-

ment forms an accessory part ; 2) those in which such addition is the principal part. The process devised by the Institute of Agricultural Bacteriology of Portici, and based on the use of the pectic aerobic ferments already mentioned, the prototype of which is the *Bacillus Comesii* (named after Prof. Orazio Comes), also mentioned above will belong to the 2nd group.

This method consists in : 1) immersing the textile materials in ordinary water ; 2) raising the whole to the *optimum* temperature of the bacillus in question, from 28° to 35° C., which temperature must be maintained during the entire period of retting ; 3) adding a sufficient quantity of pure culture of the bacillus ; 4) passing an air current through the entire mass during the whole period of retting.

Theoretically, the water, the textile material and the vessels should be sterilised, but this cannot be done under practical conditions. The novelty and the very essence of the method in question (as was shown very clearly by the long discussion, with the German Patent Office, which afterwards granted the patent) consists in the fact that the air passing through the mass regularises and intensifies the action of the pectic ferments. The latter can in this way act rapidly as retting agents, and gain the upper hand over all the other microbes present, which remain inactive.

Any water suitable for retting as practised in rural districts is also adapted for the method, and the duration of the operation ranges from 42 to 84 hours, according to the textile material.

The process is very simple and it will be seen that to carry it into practice there are only needed :

(1) Vats, differing very little from those used by peasants, and feed pipes ;

(2) Water for retting the substance, and also if necessary for washing it ;

(3) Heat (steam) ;

(4) Air for retting and drying the textile material ;

(5) Ferments.

As regards the industrial application of this method a distinction must be made, as it is more or less easy to apply according to the material operated on, and each textile fabric calls for the solution of a separate problem in this respect.

*Hemp.* The method of retting under consideration is also applicable to hemp, no matter whether the epidermis remains attached to the hemp stalk, or whether it has first of all been detached from it. If there were no other reason, however, in view of the great difference involved as regards capacity of the retting plant required, it is certain that the two cases offer two altogether different problems.

Where hemp in the stalk is in question, the required plant consists of : vats, a water pipe, boilers for steam production, a motor for compressing air, and also, of course, Decauville engines for conveying the stalks, pumping machinery for supplying and removing water, and better still, an ap-

pliance for mechanical washing of the retted hemp. Drying is carried out in the open air as in ordinary retting.

On the other hand the matter becomes more complicated where the retting is preceded by green scutching. Nevertheless the latter is always preferable, because this system carries with it the following advantages:

(1) If the scutching is done in the field, only about half the weight of raw material will have to be carried to the retting appliance.

(2) During retting, the macerating capacity will be a little more than $1/3$ superior to that of retting as practised in the country districts, hence:

(3) The reduction of the bulk to be treated means a reduction of vat area in the proportion of $2/3$.

(4) A reduction of $2/3$ in water consumption.

(5) A reduction of $2/3$ in consumption of heat and air.

Moreover, it is only by scutching first of all that one of the advantages of industrial methods generally, and the one we advocate in particular, can be really turned to account. The methods consists in the following:

(6) The work can be carried out throughout the year. Artificial drying of the stalk would entail enormous expense. Industrial stalk retting is only conceivable during the good season. Precisely the contrary is the case in the retting of the already scutched material, and drying is then one of the easiest operations.

It should also be remarked that these observations on the advantages of scutching before retting presuppose of course that scutching is possible *per se* in the first place, and then in relation to the subsequent retting of the fibres.

It can be proved that scutching is possible, though there are prejudices against it which are chiefly based on the fact that up till now mechanical white scutching or breaking of the retted stalk hemp on the country method is a problem for which no satisfactory solution has been found. There is no mechanical scutcher obviating the necessity of afterwards breaking the hemp by machine, or, better still, hand crushing it, or both together. There is also no method which does not leave a considerable quantity of tow and leave the harl very tangled.

On the other hand, there are scutchers capable of reducing from 38 to 61 % of the weight of the stalk, according to the quantity of the hemp, and which turn out inconsiderable quantities of tow.

These figures prove, it is true, that when scutching is finished, the resulting harl is still made up, to the extent of 50.2 to 46.7 %, and at very least 28.3 %, of stalk, but this is not a drawback, because retting by its very properties as easily effects detachment of the harl from the woody parts as do the operations of beating and, above all, washing; finally, however, the drying and softening of the harl, cause the disappearance of all the remaining stalk.

It is true, however, that scutching remains a fairly delicate operation, because a given machine is not always adapted for handling all kinds of hemp. It has moreover been found that green scutching is more dis-

advantageous in its results and leaves more stalk adhering, in proportion as the hemp is less dry and the stalk is finer.

As regards the retting of the scutched epidermis, it is quite true that the resulting material differs slightly in appearance from the flax retted in stalks. It is smoother, less divided, more glossy, and above all the strips appear to adhere, but it suffices to put it through a slight process, such as brushing, to render it flexible, as practised in hemp spinning works, in order to get rid of all adhesion and produce an excellent degree of flexibility, division and colour.

Nevertheless it follows from all the foregoing that it would be erroneous to suppose that the method, though admittedly efficient when applied to scutched hemp, may be deemed a simple substitute, though of course cheaper, for the method at present adopted in the country. If this were the case, it would leave unchanged all the other economic relations between the production, the industry and the trade in hemp. This is by no means the case, as the method is destined to bring about a violent change in all those relations, and entails the industrialisation of hemp retting. The hemp grower will be called upon to grow the plant and sell it in the stalks for industrial treatment ; it will be the function of the retting factory to ret the hemp after scutching it, then to comb it, or else to sell it direct to the factory which specialises in combing, spinning and weaving the hemp.

The method, in order to gain footing in the practical treatment of hemp, might encounter difficulties of 3 kinds: prejudices, vested interests, and absence of economic advantages.

We cannot here go into the first or the second of these difficulties, which for that matter are more or less common to all innovations and which are gradually overcome. On the other hand it has beeen necessary to show that difficulties of the third class do not exist. This has been done by methodical official experiments conducted chiefly at Ferrara (Italy) in 1908, afterwards at Mans (France) in 1911, and at Portici (Italy) in 1912. Here it was shown that retting by this microbiological method only takes 84 hours for hemp, without there being any danger of going beyond the *optimum* point of retting ; it does not produce any offensive smell, and in ordinary times the cost per cwt is: 3 *s.* for Italy, 3 *s.* 8 *d.* for France, as against 6 *s.* to 13 *s.* 8 *d.* for retting as practised in the countryside. On the other hand the commercial value which this method gives to hemp may amount to more than 32 % above that obtained on the other system.

With such a practical basis, industrial tests cannot be otherwise than successful, and in France, where special cultivation conditions exist, the Société Française du Rouissage industriel at Mans (Sarthe), a limited company founded in September 1912, will work the patent in France, its Colonies and Protectorates. A few months later the first factory was set up at Bonnétable, in the district of Mamers.

The factory was built for the retting of scutched hemp, and comprises the following principal sections: *Hemp stocks, Decauville light railway* with special trucks for conveying the bundles of hemp to the scutching depart-

ment. *Scutching Department* comprising: a machine for cutting off roots and tops, a drier for the stalks to be scutched, fitted with a boon suction current. *Preparation of cages of scutched hemp* and *hoist* for conveyance to the retting department. *Retting Department,* comprising a battery of 4 vats of 19.62 cu. yds. capacity each, divided into sub-vats 3ft 3in wide and 16ft 3in deep, furnished with a special arrangement for supplying steam, water and air. *Washing and Pressing Department,* containing washing machines and *centrifugal driers.* These different sections are connected with each other by overhead rails with points, for the conveyance of the cages containing the material for retting and that already retted. From the washing section a hoist runs to the *drying department* (with automatic apparatus supplying a current of hot air). There is also a *special department for the producion of ferments,* which is fitted with an automatic producing device.

After a starting period which occupied 2 months, the whole of this plant was in regular operation, and the Chairman of the Company wrote in March 1914 that, to their great satisfaction, the shareholders had been able to satisfy themselves of the following:

(1) The production of ferments by means of cultures supplied by our laboratory had always proved very regular and easy.

(2) The retting of the hemp was regularly completed in 48 hours.

(3) The yarns obtained by the *Société textile Alençonnaise* with the hemp retted on our method have been compared with the best quality Italian hemp yarns in regard to fineness and flexibility.

(4) With these yarns the said Company was able to obtain thread No. 16 dry, while the yarns of Sarthe were never able to go beyond the maximum of 7.

(5) The plant never produces offensive smells.

(6) The residual water was discharged into a small stream without occasioning any trouble.

Industrial tests have also been carried out in Italy. One was begun at Giuliano Campania, but was unfortunately stopped at the outset through the war. Another at Coccolia (Ravenna) met with the same fate, and for the same reason. Nevertheless it had already been proved that retting, even in stalks, by this method may with advantage replace the system in use in the countryside, as on this method the price per cwt of retted material is 27 *s.* 5 *d.* in place of the minimum selling price of 32 *s.* 8 *d.*

*Flax.* The application of the method to flax is, from a technical point of view, absolutely identical with its application to hemp in the stalk. The operation here again occupied a minimum period of 42 hours. It is at the present time being tried on a large scale by the *Société Française du Rouissage industriel* at Bonnétable, both for its own account and for account of third persons, to the complete satisfaction of manufacturers. It has an absolutely certain future in all those regions where flax growing is falling off day by day owing to the difficulties created by shortage of labour.

*Ramie.* The method as applied to ramie (*Boehmeria nivea* and *Boehmeria tenacissima*) certainly has a great future. Retting takes 48 to 60

hours, and is a perfect success both on the stalks and the strips and the derived product called "China-grass". The well known difficulties, however, experienced in getting rid of the cork-like film will hardly allow of applying it except to China-grass. Energetic washing is needed after retting. The resulting fibre, however, differs from the ramie fibre obtained by chemical retting. It differs greatly from silk waste, which the last-named resembles; on the other hand it very much resembles the superfine qualities of flax.

The product obtained is stronger, the fibres are more parallel, and it is easier to obtain long yarns with high yield. It is also possible to carry out bleaching, at least in medium sizes, on the finished yarn, and even to disregard this operation in inferior products and all those which do not need it owing to their purpose. The cost of retting may be estimated at 1 *s.* 8 *d.* per cwt of China-grass in normal times, and the combing yield may go up to 44 %. This method will render ramie-growing possible everywhere, when advances in machinery have furnished the means of producing China-grass by mechanical means. For the moment the industry continues to be completely subservient to the Chinese hand-barked China-grass.

*Agave, other Liliaceae, Jute, etc.* The method is perfectly well applicable to *Agave Americana, Agave sisalana* and *Sanseviera ceylanica.* With regard to the fleshy leaves, they must in the first place be reduced to strips, their tissues roughly crushed, and the product washed after retting. The leaf parenchyma is reduced to a pasty mass easily carried away by water. Drying is very easy, and may be completed in 2 to 3 hours. In 4 days the leaf is reduced to perfect and very white fibre. The retting of jute (*Corchorus* sp.) is also quite successfully accomplished.

## BIBLIOGRAPHY.

G. Rossi. — Primo contributo allo studio della decomposizione di frammenti ricavati da organi vegetali viventi. *Annali della R. Scuola Superiore d'Agricoltura in Portici,* Vol. V. Portici, Della Torre, 1903.

— Contributo allo studio della decomposizione dei vegetali. Extrait de *l'Archivio di Farmacologia sperim. e Scienze affini,* année III, fasc. X. En collaboration avec S. De Grazia et T. De Capraris, Siene, Nava, 1904.

— Studi istologici e chimici sulla decomposizione dei vegetali. En collaboration avec S. De Grazia. *Annali della R. Scuola Superiore d'Agricoltura in Portici,* Vol. VI. Portici, Della Torre, 1905.

— Histologische und chemische Untersuchungen über die Zersetzung der Pflanzen. En collaboration avec S. De Grazia. *Centralblatt für Bakteriologie,* II. Abt. XV. Bd., p. 212. Jena, Fischer, 1905.

— Contributo allo studio della formazione dell'humus. Ricerche sulla decomposizione dei vegetali. En collaboration avec F. Guarnieri. *Archivio di Farmacologia e Scienze affini,* Siene, Nava, 1906.

— Il Bacillus Comesii e le sue proprietà. En collaboration avec Francesco Guarnieri. *Atti del VI Congresso di chimica applicata.* Rome, 1907.

G. Rossi e G. Guarnieri. — Il Bacillus Comesii e le sue proprietà. Primi tentativi di macerazione delle fibre tessili coi fermenti selezionati. Extrait du volume *La R. Scuola Superiore di Agricoltura in Portici nel passato e nel presente*. Portici, Della Torre, 1906.

G. Rossi. — Primo contributo allo studio della macerazione della canapa. Extrait de la revue *Le stazioni sperimentali agrarie italiane*. Vol. XXXV, fasc. IV-V, pp. 241-278. Modène, 1902.

— Secondo contributo allo studio della macerazione della canapa. *Annali della R. Scuola Superiore d'Agricoltura in Portici*, Vol. V. Portici, Della Torre, 1903.

— Terzo contributo allo studio della macerazione della canapa e primi tentativi per la macerazione industriale delle fibre tessili coi fermenti selezionati. Ricerche sperimentali. En collaboration avec D. Carbone, F. Guarnieri et C. Del Giudice. *Ibidem*, Vol. VII, Portici, Della Torre, 1907.

G. Rossi e D. Carbone — Quarto contributo allo studio della macerazione della canapa. Ricerche sperimentali. *Ibidem*, Vol. IX. Portici, Della Torre, 1909.

G. Rossi. — Quinto contributo allo studio della macerazione della canapa. Relazione etc. *Ibidem*, Vol. XI, Portici, Della Torre, 1912.

— Sesto contributo allo studio della macerazione della canapa, *Ibidem*, Vol. XII, Portici, Della Torre, 1914.

— Settimo contributo allo studio della macerazione della canapa. *Ibidem*, Vol. XIII, Portici, Della Torre, 1914.

— Verbali e relazioni delle esperienze eseguite a Ferrara nell'estate-autunno 1908, a cura del « Sindacato Rossi », sul « Metodo Rossi per la macerazione industriale microbiologica delle piante tessili coi fermenti pectici aerobici ». Extrait du mémoire G. Rossi et D. Carbone : IV contributo allo studio della macerazione della canapa. Tentativi per la macerazione industriale delle fibre tessili coi fermenti selezionati. *Ibidem*, Vol. IX, Portici, Della Torre, 1909.

— Il « Metodo Rossi » per la macerazione microbiologica delle piante tessili e le sue applicazioni industriali. I. Le basi scientifiche del « metodo » e la sua applicazione alla macerazione industriale della canapa. *Ibidem*, Vol. XIII, Portici, Della Torre, 1916.

L. A. Marchadier. — Rapport sur les expériences du chanvre par le procédé Rossi. Le Mans, Blanchet, 1911.

G. Rossi. — Société Française du rouissage industriel. Publications faites au Bulletin annexé du Journal Officiel du 3 avril 1912. Paris, Imprimerie Kugelmann, 1913.

— Cenni popolari sull'importanza e sull'avvenire industriale della macerazione delle piante tessili coi fermenti selezionati. 1ère edit. 1907 ; 2ème edit. (aumentata). Portici, Della Torre, 1908.

La macerazione industriale microbiologica delle piante tessili nei suoi rapporti colla agricoltura italiana. Extrait de *La Rivista Agraria*, année XVII, 10-11-12, mars, 1906, Naples, Ferrante, 1907.

G. Rossi e D. Carbone. — La macerazione industriale microbiologica delle piante tessili nei suoi rapporti colla agricoltura italiana. *Boll. Uff. Min. Agr., Ind. e Comm.*, année VII vol. II, fasc. 4. Rome, Bertero, mars 1908.

— La fermentazione pectica aerobica e le sue applicazioni alla macerazione industriale microbiologica delle piante tessili. Extrait des *Atti del R. Istituto d'Incoraggiamento di Napoli*, série VI, Vol. IV. Naples, Coop. tipografica, 1907.

O. Bordiga. — La macerazione industriale della canapa col metodo microbiologico del Prof. G. Rossi. Extrait de la *Rivista Agraria*, année XIX, Nos 30, 46, 48 et 50. Naples, Ferrante, 1910.

A. Marchi. — La macerazione. Imola, Ungaria, 1907.

D. Carbone. — La cooperazione applicata alla macerazione delle piante tessili. *Ibidem*, 1907.

— Ancora sulla cooperazione applicata alla macerazione delle piante tessili. Replica al Marchese G. Capece-Minutolo di Bugnano. *Ibidem*, année XVIII, n° 6, 11 fevrier 1908. Naples, Ferrante.

G. Rossi. — Azione dell'aria sui fermenti pectici aerobici. Extrait des *Rendiconti della Società Chimica Italiana*, vol. II, fasc. 7, Rome, Italia, 1910.

D. Carbone e R. Marincola-Cattaneo. — Sull'influenza dell'ossigeno nella decomposizione dei vegetali. Contributo allo studio della formazione dell'humus. Extrait de l'*Archivio di farmacologia sperimentale e scienze affini*, vol. VII, fasc. VI, Sienne, Nava, 1908.

B. Majmone. — Ricerche sperimentali sulla decomposizione del legno nel terreno agrario. Extrait de *Ibidem*, vol. VIII, fasc. V e VI, Sienne, Nava, 1909.

D. Carbone e T. Zona. — La cultura monocitogenetica degli schizomiceti. Contributo allo studio della variabilità degli schizomiceti. Nota sperimentale. Extrait des *Annali della R. Scuola Superiore di Agricoltura di Portici*, vol. IX. Portici, Della Torre, 1909.

D. Carbone. — Sopra un bacillo macerante aerobico. Prima nota preventiva. *Rivista d'Igiene e Sanità Pubblica*, année XXV, 1914.

D. Carbone. — Sopra un bacillo macerante aerobico. Seconda nota preventiva : esperienze sierologiche. *Biochimica e Terapia Sperimentale*, année IV, fasc. 9, 1914.

D. Carbone. — Sopra un bacillo macerante aerobico. Extrait des *Annali d'Igiene sperimentale*, vol. XXVI, fasc. I, année 1916. Rome, Bertero, 1916.

G. Rossi. — Processo di macerazione industriale microbiologica di piante e frammenti vegetali per mezzo di fermenti pectici aerobici, in corrente gassosa. Brevetto italiano, Reg. Gen. vol. 62, n. 88536, Reg. Att. vol. 253-209, 17 avril 1907. Attestato completivo, Reg. Gen. vol. 66, n. 92990, Reg. Att. vol. 267, n. 90, 30 décembre 1907. Attestato completivo n. 98346, Reg. Gen., Vol. 10, N. 98346, Reg. Att. Vol. 283, N. 238, 5 octobre, 1908.

G. Massarani. — Nuovo metodo di lavorazione della canapa e relativa macchina stigliatrice a battitura graduale. Brevetto italiano, Reg. Gen., vol. 73, n. 102041, Reg. Att. vol. 303, 30 avril 1909.

G. Rossi e D. Carbone. — Processo per migliorare il colore del tiglio, Brevetto italiano, 5-11-907 n. 271. Reg. Gen., Vol. 65, n. 92006. Reg. Att., Vol. 272, N. 4.

A. Bellucci. — Un esperimento sulla macerazione della canapa col metodo Rossi. *Rivista Agricola e Commerciale della provincia di Ravenna*, Nos 7-8, Ravegnana, 1915. *La Rivista Agraria*, année XXV, Nos 11-12. Naples, Giannini, 1915.

A. Gasparoli. — Ancora sull'esperimento di macerazione della canapa col metodo Rossi. *Rivista Agricola e Commerciale della provincia di Ravenna*, année. IX, Nos 10-11. Ravenna, Ravegnana, 1915. *La Rivista Agraria*, année XXVI, No 2. Naples, Giannini, 1916.

G. Testoni. — Sui nuovi processi di macerazione della canapa. *Annali della Società Agraria della Provincia di Bologna*. Bologna, Cuppini, 1909.

P. Venino. — Appunti presi durante il viaggio d'istruzione dei laureandi della R. Scuola Superiore d'Agricoltura in Milano. Extrait da : *L'Agricoltura Moderna*, Milan, « Agraria », 1910.

B. Neppi. — La macerazione microbiologica delle piante tessili. *La Scienza per tutti*, année XVI, n° 39, 1er septembre, 1910. Milan, Sonzogno, 1910.

A. L. Marchadier. — Le Rouissage du Chanvre. Conférence faite à la Société d'Agriculture, Sciences et Arts de la Sarthe. Le Mans, Imprimerie Monnoyer, 1911.

Th. Brière. — Le Rouissage du Chanvre. *L'Agriculteur Sarthois (Bulletin du syndicat des Agriculteurs de la Sarthe)*, Année 19ème, N° 698, 7 Mai 1911. Le Mans, 1911.

J. Bricaud. — Le Rouissage Industriel du chanvre dans la Sarthe. *La Vie agricole et Rurale*, N° 51, 16 novembre 1912. Paris, Baillière, 1912.

F. Padula. — La Canapa. Coltivazione e macerazione industriale. *Ausoniae Hermes, Rivista mensile della Società d'Incoraggiamento all'Industria*, Année, I, fasc. VI : IX, Rome, 25 septembre 1914.

SECOND PART.

# ABSTRACTS

## AGRICULTURAL INTELLIGENCE

### GENERAL INFORMATION.

RURAL HYGIENE

840 – **Recent Researches on the Possible Transmission of Animal Trypanosomiasis to Man: the Biological Reactions in Human and Animal Trypanosomiasis with reference to the Identification of the Virus** (1). — LANFRANCHI ALESSANDRO., in *Atti della Reale Accademia dei Lincei, Serie Quinta, Rendiconti, Classe di Scienze fisiche, matematiche e naturali*, Vol. XXV, part 8, 1st Half Year, pp. 601-605. Rome, April 16, 1916.

The writer wished to find the limits of efficacy of his serum in the presence of the 3 viruses : *Lanfranchii*, *Evansi* and *gambiense*. To attain this object, while keeping the quantity of *virus* invariable (0.2 cc.), he varied the quantity of serum, using it in the proportions of : 1 - 0.5 - 0.25 cc. etc. The duration of contact of the 3 viruses with the writer's serum, with normal serum, and physiological serum was 3 minutes in every case. The different mixtures were then inoculated into the peritoneum of white rats.

It was found that the serum had completely exerted its protective action on the animals inoculated :

with the *virus Lanfranchii* when the serum was used in doses of 1 - 0.5 - 0.25 cc. ; with *virus gambiense*, in doses of 1 cc. ; with *virus Evansi*, in doses of 1 - 0.5 cc.

On the other hand, with *virus gambiense* at the rate of 0.25 cc. it prolonged the course of the experimentally induced disease and with *virus Evansi* in the same amount the prolongation was still greater.

(1) See also *B.* July 1916, No. 767. (*Ed.*)

841 – **Recent Investigations at the Imperial Institute in London, in reference to Maximiliana Fruits, Tobacco, Coffee, Medicinal and Poisonous Plants, and Silk.** — *Bulletin of the Imperial Institute*, Vol. XIV, No. 1, pp. 1-44. London, January-March 1916.

*Cokerite fruits and oil from British Guiana.* — The fruits of the cokerite palm were identified by the Royal Botanic Garden of Kew as belonging to a species of *Maximiliana*, probably *M. regia*. Their structure is similar to that of the fruits of *Elaeis guineensis*, and, like the latter, they furnish 2 distinct oils : that of the pericarp and that of the kernel. An examination of the samples forwarded to the Imperial Institute gave the results set out in Tables I, II and III.

TABLE I. — *Percentage composition of Cokerite fruit by weight.*

| | | | |
|---|---|---|---|
| Bracts | 12.4 | Shell | 53.6 |
| Pericarp | 17.0 | Kernel | 17.0 |

| | |
|---|---|
| Average weight of a fruit | 10.6 gms. |
| Average weight of a nut (fruit without bract or pericarp) | 7.5 gms. |
| Average weight of kernel | 1.3 gms. |

TABLE II. — *Composition of Cokerite oils.*

| | Pericarp oil | Kernel oil (3) |
|---|---|---|
| Specific gravity at $\frac{100^\circ C}{15^\circ C}$ | — | 0.8668 |
| Melting point (in open tube) | — | 27°C |
| Solidifying point of fatty acids | 25.5°C | 24.2°C |
| Acid value (1) | 28.6 | 3.1 |
| Saponification number (1) | 211.6 | 253.0 |
| Iodine number | 51.4 % | 13.0 % |
| Hehner value | — | 88.9 |
| Insoluble fatty acids | — | 88.6 % |
| Non-saponifiable substance | — | 0.3 % |
| Soluble volatile acids (2) | — | 3.0 |
| Insoluble volatile acids (2) | — | 7.0 |

TABLE III. — *Percentage composition of a cokerite kernel cake, calculated for a cake containing 7 % of fatty substance* (4).

| | | |
|---|---|---|
| Water | | 8.6 % |
| Crude protein 15 % | True protein | 14.7 |
| | Other nitrogenous substances | 0.3 |
| Fat | | 7.0 |
| Starch, etc. (by difference) | | 52.5 |
| Cellulose | | 12.6 |
| Ash | | 4.3 |
| | | 100.0 |
| Nutritive ratio | | 1 : 4.6 |
| Nutritive units | | 108 |

(1) Number of mg. of potash for 1 gram of oil.

(2) Number of cc. of decinormal alkali needed to neutralise acidity in 5 gr. of oil.

(3) Prepared at the Imperial Institute.

(4) The kernels contained 11.3 % of moisture and yielded 56.9 % of fat.

From a comparison with the oils and cakes of *Elaeis guineensis* and *Cocos nucifera* it is found that those of cokerite are almost equal in value. The problem in the utilisation of this fruit is to design a machine by which the nuts can be crushed.

*Nyassaland Tobacco.* — Of late years, tobacco has become the chief export article of Nyassaland. In 1914-1915, 3 308 948 lbs. were exported of a value of £ 82 735 (on the spot). This figure is slightly below that of the previous year. In 1915-16, tobacco growing covered 9042 acres. Almost the whole of the exports go to the United Kingdom. The average unit production was rather low in the last period of 6 years ; if ranged between 305 lbs. per acre in 1912-1913 and 520 lbs per acre in 1910-1911. The district of Blantyre furnishes nearly $^2/_3$ of the production. The varieties most grown are : " Gold Leaf ", " Warne ", " Conqueror " and " White Stem Orinoco ". From experiments carried out in the last 2 years by the Nyassaland Department of Agriculture, it results that " Gold Leaf " is perhaps the best adapted variety for the greater part of the Nyassaland tracts where tobacco is grown. It is of good cropping power and seems to posses the largest proportion of light coloured leaves. Twelve varieties of tobacco were cultivated in 1914-1915 at the Government of Nyassaland Experimental Station. The crop samples sent to the Imperial Institute contained : from 12.5 to 14.7 % of moisture, from 1.8 to 3 % of nicotine, from 1.8 to 2.9 % of nitrogen, from 11.0 to 12.8 % and in one case, 18.2 % of ash. They were valued (October 1915) at from 4 d. to 7d. per lb. The ash always contained a good deal of potash, a few sulphates and a few chlorides. The burning qualities of the tobacco are excellent.

*Uganda Coffee.* — Coffee cultivation is making rapid strides in Uganda. It is the chief crop of farms under European management, on which *Coffea arabica* occupies 9551 acres and *Coffea robusta* 367 acres. Coffee is interplanted with *Hevea brasiliensis*, which covers 4835 acres (the greater portion of this area is planted with trees under 2 years old); it is also cultivated at the different Missions, over an area of about 660 acres, and by the natives on an area of 8692 acres (estimated). These figures relate to 1914-1915, in which years 18998 cwt of coffee in the parchment (unhusked) of a value of £ 35 463 were exported. Two samples sent to the Imperial Institute for examination were estimated after husking at 54 *s.* to 55*s.* per cwt. in London (December 1915).

*Drugs supplied by African Solanaceae.* — The percentage of hyoscyamine (with which it is easy to prepare isomerous atropine, now rare on the market), was determined at the Imperial Institute in specimens of *Hyoscyamus muticus* coming from the Soudan, and *Datura Stramonium* from Egypt, the Soudan and South Africa. The results were as shown in Table IV.

While the seeds of *D. Stramonium* from the Soudan are of no industrial value for the extraction of hyoscyamine, the leaves of the same species coming from South Africa are well adapted for this purpose. In all cases, the total alkaloids were constituted almost exclusively by easily crystallisable hyoscyamine.

TABLE IV. — *Total percentage of alkaloid in the samples of Hyoscyamus and Datura (percentage of dried substance).*

| | |
|---|---|
| *Hyoscyamus muticus* : leaves and stalks | 0.770 % |
| *Datura Stramonium* from Egypt : stalks and fruits | 0.138 |
| " " " " leaves | 0.320 |
| *D. Stramonium* from the Soudan : stalks, and fruit cases | 0.130 |
| " " " " " seeds | 0.096 |
| *D. Stramonium* from South Africa : leaves | 0.540 |

*Medicinal and poisonous plants from South Africa* (1). — A summary of the results hitherto obtained at the Imperial Institute from a study of the following species : — *Senecio latifolius*, producing the " Molterno disease " in livestock ; — *Acokanthera venenata ; Ornithoglossum glaucum* (« Cape Slangkop ») a poisonous pasturage plant ; — *Homeria pallida*, causing great losses of livestock yearly in the Transvaal ; — *Crotalaria Burkeana*, causing the disease known as " stiff sickness " in livestock ; — *Chailletia cymosa* (= *Dichapetalum cymosum*), known in S. Africa as " Gift-blad ", one of the South African plants most injurious to cattle ; — *Strychnos Henningsii* : in Eastern Pondoland, by infusing the bark of this plant in alcohol, bitters are prepared which are used as an aperient ; the bark and the fruits contain a still unidentified alkaloid ; — *Gonioma Kamassi* which contains alkaloid in its bark ; *Mesembryanthemun Mahoni* — the roots of which contain a large proportion of oxalates, a yeast (Torula), and the moulds *Mucor erectus, Aspergillus oryzae,* as well as *Rhopalocystis nigra* (= *Aspergillus niger*), are used in the preparation of an intoxicating and poisonous liquor by the natives of the Transvaal and as yeast for bread by the whites ; — *Raphionacme divaricata* : its roots yield by fermentation an intoxicating and poisonous liquor employed by the natives ; — *Datura Stramonium* ; — *Barosma venusta* — *Kaempferia Ethelae*, the dried tubers of which are used in the popular medicine of the Rand natives ; — *Bersana Tysoniana* — the bitter bark of which is used as a drug by the natives ; — *Chrysophyllum viridifolium* and similar species : from their bark a substance resembling saponin is extracted ; — *Urginea Burkei* — which causes heavy losses of livestock in South Africa ; — *Buxus Macowani* : its wood, known as " South African boxwood " or " Cape boxwood " is adapted for turning and wood carving work like that of *B. sempervirens*, when certain precautions are taken in cutting and drying it. It abounds in the forests of Alexandria, Cape Province, and still more in those of Transkeian.

*Trinidad Silk.* — A first attempt at silkworm breeding was made in Trinidad in 1868, in which year *Attacus ricini* was introduced and successfully reared in that island. In 1893 there werre imported : *Antheraca pernyi ; Attacus cynthia ; Telea polyphemus ; Callosamia promethea.* The first named was successfully reared on leaves of *Terminalia Catappa ;* the second on leaves of the castor oil plant ; the cocoons obtained were smaller than those imported ; the other two were not successful. Further trials prove that *Attacus cynthia* can be acclimatised in Trinidad. *Bombyx mori* was imported there in 1907. Up to now its rearing has been ra-

(1) See also *B.* March 1915, N° 246. (*Ed.*)

ther limited; it has not been attacked by any disease; two breeds are reared, one with yellow, the other with white silk. Crosses between these two have also been made. In Trinidad there is a wild silkworm, *Attacus hesperus*, which feeds on the leaves of *Casearia* sp.; it can be reared artificially, but the moths must be enclosed in cages for mating and oviposition.

Specimens of cocoons of *Bombyx mori* (yellow and white), *Attacus ricini* and *Attacus hesperus* examined at the Imperial Institute were found to be of good quality.

There is no doubt that silkworm rearing can be successfully established in Trinidad. Of the different species there tested, those yielding the best results are *Bombyx mori*, and especially *Attacus ricini*, which stands higher temperatures and furnishes more easily handled cocoons.

## CROPS AND CULTIVATION.

SOIL PHYSICS, CHEMISTRY AND MICROBIOLOGY

842 – **On the Origin of "Red Soil".** — MANASSE E., in *Giornale di Geologia Pratica*. XIIIth Year, Part III-IV, pp. 101-103. Parma and Pisa, 1915 (1).

Trial analyses were made of two red soils from the "Montagnola" of Sienna, namely, a complete analysis, treatment with hydrochloric acid in the presence of kaolin, attack by sulphuric acid, solubility in hot dilute potassium hydroxide. From these experiments it would appear that: 1) the alumina to a fairly large extent, almost the whole of the ferric oxide, a smaller proportion of the silica, and the slight amount of sesquioxide of manganese present, are in the form of colloidal hydroxides in the two red soils; 2) the rest of the alumina is mostly in the state of clay (kaolin,) but also to a lesser extent in the form of silicates of aluminium, potassium and sodium with and without iron and magnesium (micaceous minerals ?); 3) the excess of silica must be attributed to quartz; 4) while the lime in the two red soils is due almost exclusively to calcium carbonate, the magnesia is only attributable in part to the carbonate of magnesium, the rest belonging to silicates which are little soluble or insoluble in hydrochloric acid.

In conclusion, the two red soils examined did not consist exclusively of a clayey ochreous-quartzite matter as they also contained hydroxide of iron in the colloidal state, accompanied by gelohydrates of aluminium and in smaller quantities, by silica and manganese. The two Sienna red earths present a great analogy in this respect with those of Croatia, which are considered similar to bauxites from the physical, mineralogical, and genetic point of view.

With regard to the genesis of the red earths in question, the Author is inclined to consider them as deposits of colloidal solutions mixed with matters originating from the alteration and weathering of anagenetic, schistophylladic, quartzose, etc. rocks which in the "Montagnola" of Sienna accompany cavernous limestone, not excluding however the action of ferruginous thermal waters slightly impregnated with manganese and charged with carbonic acid gas.

(1) See Vinassa de Regny P., "Red Soil", *Bulletin* September 1915, pp. 1134-1138. (*Ed.*)

843 - **Researches in Agricultural Bacteriology carried out in Denmark during the Period 1904-1914.** — CHRISTENSEN H. R. (Director of the State Agricultural Laboratory). — *Communication made to the International Institute of Agriculture by its Correspondent for Denmark, Baron de Rosenkrantz.*

These investigations were carried out during the period 1905-1909, in the laboratory of agricultural bacteriology of the Royal Higher School of Veterinary Medicine and Agriculture under Prof. Weiss and, from 1909, in the State Agricultural Laboratory, the direction of which was taken over by the same gentleman.

I. — *Two fluorescent denitrifyng Bacteria.* — These two bacteria, isolated by the writer, are distinguished from all other fluorescent denitrifying bacteria by the fact that they do not liquefy gelatine. One of them, *Bac. denitrificans b*, is capable only of reducing nitrates, while the other, *Bac. denitrificans a*, reduced both nitrites and nitrates (1).

II. — *New Principles of Analysis of Soils in connection with certain data as to the presence and distribution of Azotobacter chroococcum in various types of soils.* — Preliminary considerations as to the progress of soil research in connection with rural economics; the hygroscopic qualities of soils in Denmark; the importance of the methods of RODERWALD and MITSCHERLICH for determination of hygroscopicity, growth in area of particles of earth, the state of subdivision of soil; on the need for studying the reaction and basic quality of the soil, being properties closely bound up with its microbiological condition. After glancing at the principles hitherto adopted in bacteriological analyses, the writer gives notes on the result of his investigations of a nitrogen-fixing bacillus, *Azotobacter chroococcum.* In determining the factors causing its presence in the soil, the method was adopted of comparing an ordinary culture of the soil with other cultures into which large quantities of the microbe had been inoculated whose specific behaviour in different types of soil it was required to study in order to ascertain whether the differences in the tendency to decompose given substances are to be attributed to the microbiological or chemical condition of the soil. It was found that the presence of a growth of *Azotobacter* in a solution of mannite (1 litre of distilled water, 20 grms of mannite and 0.2 grms of bipotassic phosphate) is a reliable indication of the presence of basic compounds of calcium and magnesium in the soil in question, and may also form the criterion for determining the basic quality of the soil. This is perhaps the first example of a specific property of the soil investigated by microbiological methods. An analogous process is represented by the investigations of the presence in the soil of readily soluble phosphoric acid (2).

III. — *New Biological Method for Determination of alkaline Carbonates in the Soil.* — There are soils which, when brought into contact with a solution of mannite freed from lime and inoculated with *Azotobacter,* are un-

(1) *Centralblatt für Bakteriologie, Parasitenkunde und Infectionskrankheiten* II, Vol. XI, pp. 190-194. Jena, 1904.

(2) *Tidsskrift for Landbrugets Planteavl,* Vol. XIII, pp. 145-194. Copenhagen, 1906.

able to promote the growth of an azotobacterial flora. If calcium sulphate is then added to the solution, all the soils do not behave in the same way; in some a regular growth of the *Azotobacter* is observed, and no growth of the others. These differences in behaviour are taken to be due to the percentage of alkaline carbonates, which varies from soil to soil. This furnishes the elements for a new biological method of determining the content of the soil in basic substance (1).

IV. — *Enquiries into the Relation between the Composition of the Soil and the Presence of Plasmodiophora brassicae.* — Applying the microbiological method for determination of the soil reaction, the Writer was able to demonstrate the existence of a fairly close relation between the presence of *Plasmodiophora brassicae* and the alkalinity of the soil. The greater the the reduction in the latter, the greater the likelihood of attack, which is almost impossible in a markedly alkaline medium. I. KÖLPIN RAVN also studied the relation between the behaviour of the soil and the presence of various grass plants, arriving at the conclusion that the terms *calcifugal* and *calciphilous plants* ought to be replaced by the terms *basifugal* and *basiphilous plants*, or *acidifugal* and *acidiphilous*. Acidiphilous species would be: *Rumex acetosella, Raphanus raphanistrum, Viola tricolor, Scleranthus* (?) *annuus, Cynaphalium uliginosum, Spergula arvensis*; and basiphilous species, *Sinapis arvensis and Veronica agrestis* (2).

V. — *On the Fixation of atmospheric Nitrogen by free Microorganisms.* — A comprehensive study of the most important researches in connection with this question, and the results obtained by the Writer's experiments (3).

VI. — *In connection with the decomposition of Urea.* — A preliminary note to a study of the action of humus compounds on the splitting up of urea into ammonia (4).

VII. — *Investigations in reference to determining the Lime Requirements of the Soil* (5).

VIII. — *Influence of Humus on the Ammonification of Urea.* — The generally adopted opinion that humic substance cannot supply organisms with carbon as a food is incorrect. It results from these investigations that, in reality, many microbes capable of splitting up urea can not only utilise the humic substance, but even prefer it to all the other compounds of carbon experimented with (laevulose, xylose and various organic acids). There are also organisms which possess the property of decomposing urea even in the absence of any other organic substance, utilising it as a nutrient medium;

(1) *Tidsskrift for Landbrugets Planteavl*, Vol. XIV, pp. 292-294. Copenhagen, 1907. — *Centralblatt für Bakteriologie, Parasitenkunde und Infektionskrankheiten* II, Vol. XIX, pp. 735-736. Jena, 1907.

(2) With Kolpin-Ravn F. and Harder P. *Tidsskrift for Landbrugets Planteavl*, Vol. XVI, pp. 430-476. Copenhagen, 1909.

(3) *Tidsskrift for Landbrugets Planteavl*, Vol. XVI, pp. 303-336. Copenhagen 1909.

(4) *Centralblatt für Bakteriologie, Parasitenkunde und Infektionskrankheiten* II, Vol XXIV, p. 130. Jena 1909.

(5) With Larsen O. H.; see *Bulletin* for January 1911, No. 59. (*Ed.*)

such is *Urobacillus Beijerinckii*, isolated and carefully studied by the writer (1).

IX. — *Method of determining the Capacity of the Soil for decomposing Cellulose.* — This new method described by the writer presents the advantage that by adopting a substance made up exclusively of the compounds of nitrogen required for the nutrition of the microbes and containing no utilisable nitrogen or mineral substances (in this case filter paper without ash) the rapidity with which cellulose is decomposed must be related to the quantity of cellulose contained in the soil in a form accessible to microbes (2).

X. — *Further Researches into the Formation of Nitric Acid in Stable Manure and the Soil.* — A critical review of the literature on this question (3).

XI. — *Microbiological Researches into Peat Soils.* — In the first part of this work the Author deals with the characters presented by the flora of uncultivated peat soils ; in the second, with the chemical composition of peat soils, and finally, in the third, with the microbiological state of peat beds brought under cultivation. From this last point of view, he notes a great difference between peat beds formed by sphagnum and infra-aquatic peat beds. The former are distinguished by their feeble tendency to split up peptones, their high denitrifying power, their very weak capacity for decomposing cellulose and mannite. Infra-aquatic peats exhibit a diametrically opposite behaviour, and it is of interest to note that these peats in addition to having a strong acid reaction, contain a considerable number of nitrogen-fixing bacteria. It must consequently be supposed that the existence of these differences between the two formations will facilitate the study of yet unexplored peat beds (4).

XII. — *Determination and Significance of the Reaction and Basic Quality of the Soil.* — A report submitted to the International Congress of Agriculture at Ghent in 1913, and forming an exposition and a critical examination of the methods proposed by the author for determining the basic reactions of the soil, the putting into practice of these methods and their importance in soil research. It is indispensable that landowners should know the reaction and basic quality in order to draw logical conclusions as to cultural methods.

XIII. — *Relation between the Properties of the Soil and the Utilisation of different Phosphates.* — The tricalcic phosphate found in bones and na-

(1) *Tidsskrift for Landbrugets Planteavl*, Vol. XVII, pp. XVII. pp. 79-109. Copenhagen, 1910. — *Centralblatt für Bakteriologie, Parasitenkunde und Infektionskrankheiten* II, Vol. XXVII, pp. 336-362. Jena, 1910.

(2) *Tiddskrift for Landbrugets Planteavl*, Vol. XVII, pp. 356-359. Copenhagen, 1910. — *Centralblatt für Bakteriologie, Parasitenkunde und Infektionskrankheiten* II, Vol. XXVII, pp. 449-451. Jena, 1910.

(3) *Tidsskrift for Landbrugets Planteavl.*, Vol. XVIII, pp. 167-176. Copenhagen, 1911.

(4) With Mentz A. and Overgaard O. : *Tidsskrift for Landbrugets Planteavl*, Vol. XIX, pp. 595-652. Copenhagen, 1912. — *Centralblatt für Bakteriologie, Parasitenkunde und Infektionskrankheiten* II, Vol. 37, pp. 411-431. Jena, 1912.

tural phosphates is difficult to utilise in basic soils; the use of fertilisers of this kind must therefore be carefully avoided in soils shown by microbiological analysis (i. e. with Azotobacter) to be basic. On the contrary, there cannot be any relation between the reaction and basic quality of the soil on the one hand and the utilisation of superphosphates and basic slag on the other, nor yet between the property of assimilating phosphates difficult of solution and the capacity of setting free acids, as for instance acetic acid from calcium acetate (1).

XIV. — *Influence exercised by the Nature of Earths on the Bacteria and Chemical Condition of the Soil* (2).

841 – **Conversion of Soluble Phosphoric Acid into Insoluble Phosphoric Acid in the Soil under the Influence of Physical, Chemical and Biological Factors.** — SKALKIJ S., in *Южно-русская Сельско-хозяйственная Газета* (Agricultural Gazette of Southern Russia), XVIIth Year, Nos. 33, 34, 36, 37 and 38, pp. 6-7; 6-7; 7-8; 9-11; and 6-8. Kharkov, 1915.

The experiments were carried out at the agricultural experiment Station of Ploty (Podolia), where, for several years running, both by chemical analysis of the soil and experiments conducted in the laboratory and the open field, it was ascertained that among the principal elements of fertility in the soil of the Station, classed as " tchernoziom ", the most deficient was phosphoric acid, that is, in a form which could be readily assimilated by plants (3).

The object of the experiments was to study the intensity of fixation of phosphoric acid soluble in water, added to the soil, under the influence of chemical, physical and biological factors, in various layers of soils under a different cultural condition. By biological factors is meant the action of the micro-organisms of the soil and that of plants. In the experiments undertaken, plants were excluded. Consequently only the fixation of phosphorus by micro-organisms was studied.

The experiments were conducted with 4 different soils: April fallow soil, i. e. that begun to be tilled in April; soil which had been uncultivated for many years; kitchen-garden soil; and finally the soil of an old oak wood. Two layers were studied in each of these lands, the one arable 0 to 17.7 cm. deep, and the other below the first, from 17.7 to 35.5 cm. deep. For each experiment a quantity of earth corresponding to 1 kilogram in absolutely dry condition was taken. The experiments are divided into 2 series: in

(1) *Tidsskrift for Landbrugets Plantcavl*, Vol. XX, pp. 90-104. Copenhagen, 1913. — *Fühling's landwirtschaftliche Zeitung*, Year LXII, pp. 392-405. Stuttgart, 1913.

(2) See *B.* June 1915. No. 682. (*Ed.*)

(3) In the publication of the Department of Agriculture « Сельско-хозяйственный промыселъ въ Россіи » (Agricultural Industry in Russia), (1895-1913), Petrograd, 1914, published in Russian and French, it is stated, in connection with the Ploty Station (in the chapter where brief particulars of the scientific work of the principal Russian Agricultural Experiment Stations are given), that " its investigations in connection with the conditions affecting the contents of the soil in two principal elements of fertility, nitrogen and phosphorus, have gained it a wide reputation ". The results of the experiments summed up in this article supplement those which appeared on page 188 of the publication in question.

the first there was added to each sample of earth in addition to water soluble acid potassium phosphate (1.3312 g. of $P_2O_5$), 3.605 g. of potassium nitrate in order to observe how this addition affects the total fixaction (i. e. that due to physical, chemical and biological factors) of soluble phosphoric acid. These experiments were made with the April fallow soil and the soil long out of cultivation. In the second set of experiments part of the soil was treated with chloroform, to suspend bacterial life and consequently the fixation of phosphorus by these bacteria ; the other part of the soil not being so treated. The object was to differentiate the fixation of soluble phosphoric acid produced by physical and chemical factors from the biological fixation due in this case to the activity of the micro-organisms. The quantity of chloroform added was 50 cc. and that of phosphoric acid the same as in the previous case.

To all the samples of air-dried earth 35 per cent by weight of water was added, to stimulate activity of the micro-organisms ; in order to prevent evaporation of water the samples were put into big bottles with ground glass stoppers. During the entire continuance of the experiments (3 months) the temperature ranged between 15° and 25° C. The external appearance of the samples remained normal until the end of the experiments. On completion of the latter, the soluble phosphoric acid, which had remained as such in the soil, was extracted by distilled water, of which 4 litres per sample were added. The duration of treatment with water was 8 hours. Care was taken to shake up the solution every 15 or 20 minutes.

The results of the experiments are summed up in the appended Table.

From the results obtained the writer deduced the following conclusions :

1) The process of fixation of water-soluble phosphoric acid depends both on the chemical and physical factors and on the biological factors of the soil.

2) The intensity of total fixation of the said acid is in direct relation to the cultural conditions of the soil.

3) The intensity of total fixation of the said acid increases with the addition of potassium nitrate to the soil.

4) The process of fixation of water soluble phosphoric acid in the non-chloroformed, i. e. the natural, samples of earth takes place with greater intensity than in the chloroformed samples.

5) The total intensity of fixation and the physical and chemical fixation of water-soluble phosphoric acid is less in the arable layer (from 0 to 17.7 cm. depth) than in that lying immediately beneath (from 17.7 to 35.5 cm).

6) The intensity of the process of assimilation of phosphorus is greater in the arable layer than in that immediately beneath.

For better study of the phenomenon of assimilation of phosphorus the writer also carried out experiments on the bacterial flora of each of the samples of soil capable of multiplying in peptonised meat bouillon, with agar or gelatine, dilute to 0.001 and 0.0001. By calculating the number of bacteria per gram of absolutely dry soil, data were obtained from which it may

*Fixation of Phosphoric Acid soluble in water, in percentages of the quantity added to the soil* (1. 3312 g. of $P_2O_5$).

| Fixation of water soluble phosporic acid | In the layer from 0 to 17.7 cm. deep. | | | | In the layer from 17.7 to 35.5 cm. deep. | | | |
|---|---|---|---|---|---|---|---|---|
| | April fallow | Uncultivated land | Kitchen garden soil | Forest soil | April fallow | Uncultivated land | Kitchen garden soil | Forest soil |
| A. *1st Series of Experiments.* | | | | | | | | |
| I. Total fixation (supplying potassium nitrate) | 89.80 | 87.93 | — | — | 92.56 | 89.87 | — | — |
| II. Total fixation (without potassium nitrate) | 87.14 | 84.04 | — | — | 91.64 | 86.92 | — | — |
| B. *2nd Series of Experiments.* | | | | | | | | |
| I. Total fixation (in chloroformed soil) | 87.14 | 84.04 | 84.06 | 75.28 | 91.64 | 86.92 | 84.11 | 83.87 |
| II. Physico-chemical fixation (in chloroformed soil) | 84.90 | 81.92 | 82.58 | 73.16 | 89.94 | 86.05 | 83.29 | 83.65 |
| III. Biological fixation due to micro-organisms, or assimilation | 2.24 | 2.12 | 1.48 | 2.12 | 1.70 | 0.87 | 0.82 | 0.22 |

be deduced that the quantity of these bacteria increases with the improvement of the cultural condition of the soil.

As regards the relations between the quality of the bacterial flora of the soil and the intensity of assimilation of phosphorus, it is stated that there is no possibility of ascertaining them by means of the data obtained. There are however some indications pointing to the existence of such relations.

MANURES AND MANURING

845 – **Rapid and simple Determination of the Nitrogen in Liquid Manure by means of a Densimeter.** — VOGEL, in *Illustrierte landwirtschaftliche Zeitung*, 36th year, No. 39, pp. 277-278, 1 fig. Berlin, May 13, 1916.

Many endeavours have been made to devise a good method by which farmers might themselves rapidly and accurately ascertain the value of liquid manure, but hitherto without much success. Thus, VON AHR observed certain relations between the specific gravity on the one hand and the proportions of dry substance and nitrogen on the other by means of which a fairly accurate and practical method might be contrived; VON FEILITZEN has also published some notes which suggested a certain relation between the specific gravity and the content of nitrogen.

The recent experiments of the writer have shown that there is only a reliable relation between the specific gravity and nitrogen where the liquid manure is fermented to a sufficient degree. The more the composition resembles that of fresh urine, the less evident the relation becomes. In order to be able to establish the relation clearly, 80 per cent of the total

nitrogen must be in the form of ammonia. The urine at the time of analysis must therefore not be too fresh ; it must have been in the pit for at least 10 to 14 days. It was also found that fairly wide variations of the nitrogen content are accompanied by only slight variations in the specific gravity, and that the relation differs according to whether the urine is from cattle only or a mixture from different livestock. In cattle, urine relations are more regular.

On the strength of these observations the writer designed a densimeter which enables the nitrogen content of the urine to be rapidly ascertained with fair accuracy. His observations referred only to pure cattle urine. The densimeter very much resembles that for measuring the density of milk ; as in the latter case, it is immersed in the liquid in question and the number of degrees read off on the scale ; the temperature of the urine should be from 16 to 17° C. The greater the number of degrees shown, the smaller the content of nitrogen and vice-versa.

The percentage of nitrogen was ascertained in the urine of a number of different animals by means of the densimeter and the chemical method ; it was found that the result is almost the same by the two methods. The relations ascertained by means of the densimeter are as follows :

| Specific gravity of urine | Quantity of nitrogen found in 1 litre of urine |
|---|---|
| Up to 1.01 | Up to 2 gms. |
| 1.01-1.017 | 2-3 |
| 1.017-1.020 | 3-4 |
| 1.020-1.027 | 4-5 |
| 1.027-1.032 | 5-6 |
| 1.032-1.038 | 6-7 |
| More than 1.038 | More than 7 |

The densimeter consequently furnishes a means of examining the majority of the cattle urines used in practice. On the basis of these data it is possible to calculate the quantity of liquid manure to be used when grass-land is to be manured with a given quantity of nitrogen. For instance, if the densimeter shows the proportion of nitrogen of 4 to 5 gms per litre and the grass-land is to be manured with 30 kg of nitrogen per hectare (26.8 lbs per acre), from 6000 to 7500 litres (534-668 gallons per acre) of urine must be used.

The addition of a small quantity of water to the urine does not very much affect the result, but a large quantity is injurious.

The densimeter is made by the firm of HUGERSHOFF in Leipzig.

846 – **Experiments on Humogen or Bacterised Peat** (The Woburn Experimental Station of the Royal Agricultural Society of England, Pot Culture Experiments, 1915, IV). – VOELCKER J.A., in *The Journal of the Royal Agricultural Society of England*, Vol. LXXVI, pp. 357-363 + plates 9-10. London, 1915.

The humogen or bacterised peat of PROF. W. B. BOTTOMLEY was compared with nitrate of soda and with controls : 1) in pots containing respect-

ively oats, peas and mustard ; 2) in the open field planted with oats. The humogen used was of the chemical composition shown in the following Table.

*Chemical composition of the humogen.*

| | Dry sample | Wet sample |
|---|---|---|
| Water | 51.49 % | 74.42 % |
| Organic substances | 25.66 | 22.30 |
| Mineral substances | 22.85 | 3.28 |
| | 100.00 | 100.00 |
| Total nitrogen | 1.49 % | 1.38 % |
| Nitrogen soluble in water | 0.08 | 0.48 |

In the pot experiments, in accordance with the instructions of PROF. BOTTOMLEY, bacterised peat was used at the rate of 1 part to 9 or 19 parts of soil, i. e. 89.4 or 44.7 tons per hectare, and the equivalent of nitrate of soda used for moist humogene was in the proportion of 20.9 or 10.4 cwt. per acre.

The results of the pot experiments demonstrate that under the conditions existing when plants are grown under glass are regularly watered and looked after, a good dressing with humogen may produce a considerable development of the green parts, and consequently promote the growth of green forage plants, but it has no advantageous effect on seed production. Under the natural conditions of growth in the open field it was not possible in ordinary crops to detect any advantage resulting from the use of humogen in quantities suitable for the practical farmer, or at the rate of 5 cwt. per acre (1).

AGRICULTURAL BOTANY, CHEMISTRY AND PHYSIOLOGY OF PLANTS.

847 – **Growth of the Root System of *Medicago sativa*.** — SHISTOVSKIJ, in *Южно-Русская Сельско-Хозяйственная Газета* (The Agricultural Gazette of Southern Russia), Year XVII, No. 30, pp. 6-7. Kharkov, August 1915.

The following experiments were carried out by the Plant-Breeding Section of the Regional Agricultural Experiment Station of Kharkov, the object being to study of the growth of the root system of *Medicago sativa* in its different phases of vegetation.

Lucerne from a farm in the province of Ekaterinoslav was sown in 12 Rotmistrov boxes placed in the ground without any cover and filled with soil from a lucerne field of the Station. Sowing was carried out on the 21st April, with ungerminated seeds, at the rate of 10-20 to each box. On the 2-3 May, all the plants except one were removed from each vessel. For some time, namely until the plants had grown robust, they were watered every day; they were then allowed to grow under natural conditions, with only occasional watering, once or twice a week.

The roots were separated by washing with water six times, namely when the plant had reached the age of 1, 2, 2 ½, 3, 3 ½ and 4 months; for

(1) See this *Bulletin*, May 1916, No. 497. (*Ed.*)

each of these operations 2 plants were used, one as control. The results of the experiment are contained in the following table :

*Growth of the aerial and subterraneous portion of Lucerne.*

| Age of the plant in months | Vegetative phase of the plant | Aerial portion | | | Roots | | | | | |
|---|---|---|---|---|---|---|---|---|---|---|
| | | General habit of the plant | Length in cm. | | Length in cm. | | Horizontal extension in cm. | | Root coefficient (1) | |
| | | | basal | control | basal | control | basal | control | basal | control |
| 1 | — | 1 stalk | 8 | 6 | 17 | 16 | — | — | — | — |
| 2 | — | 1 stalk | 12 | 10 | 44 | 35 | — | — | — | — |
| 2.5 | — | 1 stalk | 17 | 28 | 51 | 45 | — | — | — | — |
| 3 | flowering | tuft | 37 | 40 | 103 | 110 | 75 | 73 | 7 725 | 8 030 |
| 3.5 | early maturity | tuft | — | — | 104 | 107 | 75 | 89 | 7 815 | 9 523 |
| 4 | completely mature | tuft | 40 | 42 | 108 | 115 | 102 | 91 | 11 664 | 10 465 |

(1) The root coefficient is the product of the length of the root by its horizontal extension.

On analysing the data contained in the table it is seen that the growth of the root system of lucerne continues uninterruptedly from germination to fructification. Nevertheless, it is not uniform. Up to the the age of 2 ½ months, growth takes place with a certain uniformity ; at the end of the first month the maximum length of the roots was from 17 to 16 cm.; at the end of the second month 44 and 35 cm. and at the age of 2 ½ months, 51 and 45 cm.; in the two following weeks, which form the pre-flowering period and actual flowering period itself, the growth of the root system was very intense, giving as the result at the end of the third month a length of root from 103 to 110 cm. So great a fluctuation in the growth in length of the root system was not observed either before or after this period. The writer regards this fact as essential in his investigations.

It is interesting to note that the results of the experiments carried out by the writer agree with those obtained earlier with the same plant, *i. e.* lucerne, by V. G. ROTMISTROV, but better specify the process of growth of the root system of this plant, by establishing the period of the most intense growth in length. This it was not possible to ascertain from the experiments of ROTMISTROV, because he only separated the roots by washing 4 times, namely, 14 and 21 days after germination, and at the beginning of flowering and ripening.

848 – **The Taxonomic Value and Structure of the Peach Leaf Glands.** — GREGORY C. T., in *Cornell University Agricultural Experiment Station of the New York State College of Agriculture*, Bulletin 365, pp. 183-222 + 9 plates. Ithaca, N. Y., November 1915.

Since the early part of the nineteenth century, the leaf glands have been used by all systematists in the classification of peaches and nectarines. Recently some doubt has arisen as to the advisability of using them for classificatory purposes because of their variability.

In a large number of cases the glands are stable and can be safely used to aid in the identification of certain varieties, There are also varieties in which the glands are exceptionally unstable, being on the border line between the two types — reniform and globose — and having what might be termed mixed glands. These mixed glands are of two kinds : one in which the majority of the glands are reniform, intermingled with globose forms ; the other in which the globose form predominates. It would be quite possible, as CARRIÈRE (1867) suggests, to distinguish a third type of gland — the mixed type. It is important that leaves should be chosen from healthy branches on bearing trees. It is also best to obtain a large number of leaves or to examine the tree carefully before making the final selection of leaves. Mature leaves are best because their glands are full-sized and correctly shaped, while on young leaves the form of the glands is usually vague ; old, partly decayed, globose glands frequently have much the appearance of reniform glands.

The structure of the glands shows that they are true glands, having an upper layer of long, rectangular, secretory cells that produce a sweet substance, the function of which is not apparent. After the glands have ceased secreting they begin to decay, becoming brown on the upper surface and slowly disappearing until almost nothing is left. This decaying is a very complicated process, being preceded in every case by a suberization and thickening of the cell walls. The spines of the leaf are very similar to the glands in structure, having the same upper layer of long cells, but with much more heavily cutinised walls. A study of the transitional forms indicates that the glands are merely modified leaf spines.

The leaves with reniform glands are apparently the highest type and the glandless leaves the lowest, with the transition through the globose type.

The serrations of the glandless leaves are very strikingly different from those on a leaf with glands. The former leaves are deeply and doubly serrate, while the margins of the latter are always single and crenate. Almost invariably, when glands develop on a normally glandless leaf, the serrations are transformed to crenations, indicating that there is a very close correlation between the glands and the crenations on the edges of the leaves.

In the appendix a list of 29 works on the subject is given.

849 – **The Root Nodules of *Ceanothus americana* and of *Cycadaceae*.** — I. BOTTOMLEY W. B., *The Root Nodules of Ceanothus americanus*, in *Annals of Botany*, Vol. XXIX, N° 116, pp. 605-610 + pl. XXVIII. London, 1915. — II. SPRATT E. R., *The Root Nodules of Cycadaceae*. *Ibid.*, pp. 619-625 + pl. XXIX.

I. The writer examined root-nodules from species of *Ceanothus* growing wild in North America, where the genus is indigenous. Nodule-bearing roots of two different species were examined : *Ceanothus americanus* L. (New Jersey tea) and *Ceanothus velutinus* Dougl. (mountain balm). As the preliminary examination showed that the nodules of both species are practically identical, the following description of *C. americanus* applies equally to *C. velutinus*.

The root-nodules of *Ceanothus americanus* are modified lateral roots. They are perennial and increase in size each year by the formation of endogenous outgrowths (branches) similar in structure to the primary branch.

Each primary nodule and branch when fully grown shows four zones : *a*) an apical meristematic zone ; *b*) an infection zone, where the cortical cells are becoming infected with bacteria ; *c*) a bacterial zone, containing many radially-elongated enlarged cells filled with Bacteria ; *d*) a basal zone almost free from bacterial cells.

The younger bacterial cells contain rod-shaped organisms, the older ones spherical bodies. These latter are the " bacteroid " condition of the active nitrogen-fixing rod-shaped bacillus.

The bacteria, when isolated and grown in pure culture, can fix free atmospheric nitrogen, and from their structure, mode of growth and formation of " bacteroids " evidently belong to the *Bacillus radicicola* group.

The paper is accompanied by a bibliography containing 7 references.

II. — Amongst non-leguminous plants it is now recognized that the *Elaeagnaceae*, *Myricaceae*, *Podocarpinae*, and the genus *Alnus* have root-nodules, which are definitely concerned with nitrogen assimilation. With these the *Cycadaceae* must be associated, because BOTTOMLEY has isolated from the nodules of *Cycas* not only *Bacillus radicicola* but also *Azotobacter*, both of which organisms are known to assimilate atmospheric nitrogen. They are, however, of special interest because in their cortex a very definite green ring, the algal zone, is produced by the presence of an *Anabaena*, which has been described by the writer.

The first part of the present series of investigations was carried out using as material *Cycas circinalis* L. and *Encephalartos Hildebrantii* A. Br. & Bouché and was extended to comprise the genera *Stangeria*, *Macrozamia*, *Zamia*, *Ceratozamia*, *Dioon*, and *Bowenia*.

Root-nodules have been found to occur throughout all the genera of Cycads, and as in other non-leguminous plants, they are perennial modified lateral roots which have diverged from their normal growth owing to infection with the nitrogen-fixing organism *Bacillus radicicola*. A whorl of lenticels or a continuous zone of loosely arranged parenchymatous cells is produced at the base of each nodule. The outer cells always become pushed apart and infected by *Azotobacter* and, if suitable conditions prevail, by *Anaboena* also. The presence of the alga stimulates the phellogen to produce

other lenticels, from which and the basal area, a zone of tissue is produced which encloses the original outer cells in which are the algae and bacteria. The algal zone is continuous, except immediately below the lenticels, extending from the base nearly to the meristematic apex.

The algal zone consists of a large air-space containing *Anabaena* and *Azotobacter* which is kept intact by papillate cells traversing it from both the inner and other tissues. *Bacillus radicicola* is chemiotactically attracted to the algal zone, thus leaving the cortical cells in which large quantities of starch grains and sphaeraphides are deposited, and in *Dioon*, also tannin. No algal zone has been observed in *Macrozamia*, *Zamia*, *Ceratozamia*, and *Bowenia*, but nodules are produced by *Bacillus radicicola* and *Azotobacter*.

The Cycadaceae, a group with many primitive characters, are the only nodule-bearing plants known, in which four organisms are associated together symbiotically, *viz.* two nitrogen-fixing bacteria, an alga, and the cycad.

A bibliography containing 11 references is appended.

850 – **The Enzymes Zymase and Carboxylase in the Storage Organs of the Potato and Sugar Beet.** — BODNÁR J. (Chemical Laboratory of the Royal Hungarian Station of Plant Physiology and Pathology, Budapest), in *Mathematikai és Természettudományi Értesitö* (Bulletin of Mathematics and the Natural Sciences), Vol. XXXIII, Parts 3 and 4, pp. 591-610. Budapest, 1915.

After reviewing the work of BUCHNER, STOKLASA, NEUBERG, MAZÉ, PALLADIN and KOSTYSTCHEW, etc. the writer sets out his experiments in detail (summarised in several tables) as carried out on the tubers of several varieties of stored potatoes and on specimens of thoroughly ripe sugar beet.

*Conclusions:* 1) Zymase can be isolated from the storage organs of the potato and the sugar beet. These results agree with the observations of J. STOKLASA.

2) Even though in some cases there were bacteria in the fermenting liquid obtained, they did not exhibit the property of splitting up glucose in the presence of 2 per cent toluol, in the manner characteristic of alcoholic fermentation.

3) The enzyme extracted from the tuber suffering from the disease termed by APPEL "Bakterien-Ringkrankheit" (1) acts on the solution of glucose in such a way that in the fermenting liquid only traces of alcohol can be detected. On the other hand, there is found the presence of an excess of acetic acid due to the action of the soil bacteria (producing alcohol-oxidase) on the alcohol formed by the activity of the zymase. The bacteria of the soil had entered in the spore form into the enzyme extracted from the diseased tubers.

4) Under the action of the enzyme isolated from sugar beet suffering with bacillary gummosis, carbonic acid and alcohol were produced in

(1) Cf: O. Appel, Die Bakterien-Ringkrankheit der Kartoffel, in *Flugblatt* 36 der *Deutschen Kaiserlichen Biologischen Anstalt Dahlem*, 1906. — P. Sorauer, *Handbuch der Pflanzenkrankheiten*, 3rd edition, Vol. I, pp. 398-399. Berlin, Paul Parey, ed., 1909.

much smaller proportions than in the alcoholic ferment. This phenomenon still remains unexplained.

5) Just as in the zymase of yeasts, the presence of NEUBERG's carboxylase is also recorded in the zymase of potato and sugar beet.

6) The fact that a product acting exclusively on pyrotartaric acid was obtained, but leaving the sugar solution intact, a property peculiar to carboxylase, shows that the latter may also be extracted from the zymase of the potato and sugar beet.

7) In the same way as the carboxylase of yeasts, the carboxylase of the potato and sugar beet is much less sensitive to a high temperature and to different antiseptics than the other zymases.

851 – **Investigations into the Part played by the Amylase in Potato Tubers.** — I. BODNÁR J. (Royal Station of Plant Physiology and Pathology, Budapest), Relation between the amylase and sugar content in stored potato tubers, in *Kiserletügyi Közlemények* (Bulletin of the Agricultural Stations of Hungary), Vol. XVIII, Part 4, pp. 789-795. Budapest, 1915. — II. DOBY G. and BODNÁR J., Amylase in healthy potatoes and in those suffering from leaf curl, *Ibid.* Vol. XVIII, Part 5-6, pp. 956-968, 4 tables, 1915.

I. — According to the enquiries of W. HENNEBERG, the content of sugar in the potato influences its keeping powers, those kinds which are poor in sugar exhibiting greater resistance to bacterial decomposition than those with a relatively large sugar content. A high sugar content thus seems to constitute a predisposition to rot, and it is of great importance from the practical point of view to know this content.

The object of the present work was to examine the possibility of finding a relation between the sugar content of stored potato tubers in the resting state and one of its regulating agents (enzymes) ; in other words to determine, from the proportion of the corresponding enzyme, the total quantity of sugar forming in the tubers in the resting state, and concluding from this whether or not the tubers are adapted for storing. In the total quantity of sugar in the tubers, there was also included the sugar consumed by the respiratory process, because from the point of view of storage, it is important to ascertain the loss of starch occasioned by the respiration of the tubers.

The experiments carried out were for the purpose of determining whether the proportion of sugar in the tuber in a state of rest can be brought into relationship with the activity of the amylase present. The result of the following determinations are given : proportion of amylase in 9 tubers, proportion of reducing sugar (glucose), proportion of non-reducing sugar (saccharose), and total sugar content of these tubers. The experiments, which are summarised in several tables, gave the following results.

Maltase was present in the tubers in a state of rest.

There is no regular relation between the proportion of reducing sugar (glucose) in the tuber and the activity of the amylase present ; the quantity of reducing sugar does not always increase in proportion with the activity of the amylase.

On the contrary, a certain relation can be found between the activity of the amylase and the proportion of non-reducing sugar (saccharose),

as also between this activity and the total quantity of sugar. Thus, with the increase of activity of amylase, the proportion of total sugar and of non-reducing sugar also increases, except in the cases where certain tubers, owing to their more intense respiration, contain less sugar than tubers with amylase of equal activity but weaker respiration.

The knowledge of the activity of the amylase is of great importance from the point of view of storage of the potatoes, inasmuch as those potatoes which contain amylases of higher activity are rich in sugar or their respiration is more intense. It is known, however, from the investigations of W. HENNEBERG, that the tubers with a high sugar content are more liable to rot, and that on the other hand tubers with more intense respiration undergo a larger reduction of the starch content.

Among the tubers subjected to low temperature, increase in the sugar content occurs in those in which the amylases possess greater activity.

II. — The results by means of which DOBY determined the characteristic properties of amylase in potatoes in the resting state afforded the possibility of continuing enquiries into this question. The experiments were carried out on carefully chosen potatoes from the test fields of the Royal Hungarian Station of Plant Physiology and Pathology. A parallel analysis was made of 11 specimens of healthy and diseased potatoes and 9 specimens of exclusively diseased potatoes, along 2 lines ; it was ascertained in what way the proportion of amylase is modified first of all in the potato in a state of rest and afterwards in the expressed juice of the tubers and during its storage.

From these researches, it is concluded that a portion of the amylase is present in the potato in the form of zymogene which is transformed into an active enzyme towards the end of the resting stage ; this transformation, however, takes place much more rapidly if the juice of the tubers is kept in the presence of an antiseptic. FORD and GUTRIE, and also VAN LAER, have endeavoured to determine the agents which produce this metamorphosis. They immersed the dust of germinating barley in papaine, which increased the activity of the amylase. There is reason to believe therefore that in the potato also, the action oft he proteolytic enzymes slowly transforms the zymogene of the amylase into free enzyme during the winter rest; this transformation is more rapid in the expressed juice after the cell walls have been destroyed, from which it follows that the action of the amylase becomes stronger in the juice antiseptically stored. Up to the middle of the period of rest, however, the quantity of zymogene is small ; it only begins to increase at the beginning of January, and from this time onwards increased activity of the stored juice may be observed. It is well known that the amylase of the potato is extremely sensitive. It follows that the greater the initial activity of the potato juice, the less this activity increases during the storage of the juice, that is to say, the more quickly it disappears. While the quantity of enzyme in the juice is small and that of zymogene large, so many new enzymes are formed by autolysis from this latter, that a total increase of them is observable, in spite of the weakening and disappearance of the enzymes already present. On the other hand, towards the spring, the

quantity of zymogene constantly diminishes and that of enzyme increases; consequently the action of the fresh juice will be stronger, but during storage it will no longer increase, and as the intensity of activity depends on the continual formation of enzymes by the zymogenes, the weakening of the action will be evident. These considerations lead to the following conclusions: the nearer spring approaches, the more the action of the freshly expresses juice of the tubers will gain in intensity; on the other hand, the activity of the juice prepared in winter increases but little during storage, but is maintained for a long time; the activity of the juice prepared later increases rapidly, but is of shorter duration: finally the activity of the juice prepared towards the end of spring shows no increase and becomes less and less lasting.

Other investigations have brought out the fact that the proportion of amylase in the potato (in the freshly prepared juice) is dependent neither on the variety nor on the soil, but depends on complex factors the elucidation of which requires further research.

The activity of the amylase is almost entirely independent of the size of the tubers.

Finally it was ascertained that, between the tubers of healthy plants and those from plants suffering from leaf curl, there is no correlation in the absolute value of the amylase content; on the other hand, the ratio enzyme to zymogene differs in healthy and in diseased tubers. In the healthy potato there is comparatively more zymogene, and therefore more of it in reserve, than in the diseased ones; the activity of the juice of the healthy tubers is stronger and more constant than that of the diseased tubers. These investigations therefore confirm the observations according to which the curl of the potato leaf is accompanied, not only by mycological, but also by chemical transformations. These researches likewise refute the thesis of MASSEE, according to which, the quantity of amylase is less in the selected potato and consequently resistance to disease would be weakened by selection; if this were true, the amylase content in the diseased potatoes should also be less. Contrary to this view, however, the observations of the writers agree in their general character with those of DOBY, inferred from the chemical composition of the healthy and diseased tubers, and the ratios of concentration of their oxydases, according to which the proportion of the enzyme hydrolysing starch is not in direct relation to the state of health. These experiments have shown that changes indeed take place but they are of so subtle a nature that only minute analyses could make them clear.

Further studies are required to elucidate such questions as to whether the chemico-pathological changes are brought about by pathogenic plant parasites, and to what extent the optimum of amylase and the activation of the latter by foreign substances differ in healthy and in diseased tubers.

852 – **Amount of Humic Substances in Decomposing Leaves** (Laboratory of Scientific Agriculture of the University of Petrograd). — TRUSOV A. C., in *Сельское Хозяйство и Лѣсоводство* (Agriculture and Sylviculture), Vol. CCL, year LXXVI, pp. 339-361. Petrograd, March 1916.

Continuing his researches into the humification of the elements which constitute the vegetable organism (1), the writer now communicates the results of his experiments into the quantity of humus soluble in water and dilute ammonia, produced in the leaves of maple and birch in decomposition; the influence of the conditions under which decomposition takes place; a comparison between the two methods of determination of humic substances, namely the colorimetric method and the permanganate of potash method; and the composition of the humic substances extracted from the decomposing leaves; finally he also gives the conclusions drawn on the basis of these experiments.

In these investigations, maple and birch leaves were employed. The maples leaves were chosen on account of their richness in tannic substances, which, as is proved by the writer's early work, should play an active part in the formation of humus.

The leaves were taken in September, that is, when already yellow; a number of them were taken from the tree, so as to have a product not far advanced in decomposition, and the rest were gathered from the ground a order to secure the bacterial flora, which, under normal conditions, plays a part in the decomposition of maple leaves. For some days, the leaves gathered were dried at a temperature of 15-17° C., 5 grms by weight were then put into each capsule, and 15 cc. of water added every day for a period of 40 days, in order to keep the conditions of decomposition constantly favourable; after this first period, during the following 60 days, only 10 cc. of water were added, with a view to avoiding excessive moisture, as about one-third of the leaves were already decomposed; on the expiry of 100 days only 5 cc. were added. In spite of the addition of this large quantity of water, it may be assumed, in view of the constant temperature of 37° C. that the decomposition of the leaves takes place under the conditions in which it would occur in the case of incomplete water saturation of the leaves, the saturation really only having been complete for a comparatively short time in these experiments. In addition to distilled water, the leaves were, in order to allow of inoculation by their respective micro-organisms, wetted occasionally with some drops of water in which leaves decomposed on the ground had been steeped, the said leaves having been taken from the same tree as those used for the experiment.

The decomposition of these latter was carried out in an incubator at a constant temperature of 36-37° C., which was selected in order to hasten the process in question.

The determination of the humic substances was made after 4, 8, 12, 16, 25, 40, 66 and 100 days from the start of the experiment. Each time 4 dishes were taken, two for ascertaining the quantity of dry matter and, after-

(1) See *B.* 1915, Nos. 347, 888 and 1123; *B.* January 1916, No. 11. (*Ed.*)

wards, the composition of the organic substance of the leaf, and the other two for determining the quantity of humic substance soluble in water and ammonia. Two ammoniacal solutions were used, one to determine the humic substance insoluble in water, and the other to estimate the total quantity of this substance. The determinations were made by the two methods, namely the colorimetric method and the permanganate of potash method.

The results furnished by each method were compared, and the accuracy of the colorimetric method in particular was shown ; the results of both were to a great degree parallel, but reasons are stated for the preference given to the permanganate method, which enables the work to be done much more rapidly.

The results of the experiments on maple leaves are combined in the folllowing table.

*Quantity of humic substances produced in decomposing maple leaves at a constant temperature of 37° C., when these leaves are incompletely impregnated with water.*

| Number of days after beginning of experiment | Part soluble in water. Per cent. | | Part soluble in ammonia. Per cent. | | Total percentage soluble in ammonia | |
|---|---|---|---|---|---|---|
| | Relatively to amount of decomposed leaf | Relatively to maximum quantity of humic substance produced | Relatively to amount of decomposed leaf | Relatively to maximum quantity of humic substance produced | Relatively to amount of decomposed leaf | Relatively to maximum quantity of humic substance produced |
| 4 | 1.16 | 97.3 | 1.02 | 77.0 | 2.19 | 86.4 |
| 8 | 1.32 | 100.0 | 1.47 | 100.0 | 2.79 | 100.0 |
| 12 | 1.27 | 96.3 | 1.23 | 85.9 | 2.48 | 88.8 |
| 16 | 1.07 | 75.5 | 1.17 | 73.8 | 2.24 | 73.8 |
| 25 | 1.10 | 69.5 | 1.71 | 97.0 | 2.81 | 83.4 |
| 40 | 0.53 | 32.4 | 0.99 | 55.7 | 1.54 | 44.3 |
| 66 | 0.64 | 36.5 | 0.56 | 28.7 | 1.22 | 32.4 |
| 100 | 0.50 | 27.4 | 0.94 | 77.4 | 1.48 | 37.7 |

Similar results were also obtained with birch leaves, with the difference that the ratio between the proportion of humic substance soluble in water and that soluble in ammonia is not the same as for the maple leaves (being 1 : 1 in the latter case, against 1 : 2 or 3 in the case of the birch leaves). It was also ascertained that a more thorough drying of the decomposing leaves entails a reduction in the solubility of the humic matter, and that this is probably the cause of the fluctuations still observed in the table reproduced above.

*Conclusions.* 1. — The content of water-soluble humic substance varies according to the decomposed leaves ; for instance, for autumn leaves of the

maple which have just fallen, after 4 days' decomposition this content is 1.93 per cent and represents about 50 per cent of the total content of humic substance.

2. — In the course of the gradual decomposition of freshly fallen autumn maple leaves, the quantity of water-soluble humic substance increases at first and then falls off, a contrary phenomenon to what one would *a priori* assume, seeing that the source of the humus is not the whole of the vegetable substance, but only some of its particular constituents. It follows from this that it is during the first period of its decomposition that vegetable residue takes the most active part in the formation of the soil humus.

3. — The same phenomenon, namely, initial increase followed by subsequent reduction of humic substance, is also disclosed in the case of ammoniacal solutions of this substance. These facts prove clearly that humic substance is chiefly formed during the first brief period of decomposition of vegetable detritus. Then, evidently, this substance itself is partly decomposed and passes partly into other forms of humic combinations.

4. — The ratio between the quantity of water-soluble humic substance and that soluble in ammonia varies with the different leaves undergoing decomposition and the different periods of the process.

5. — The content of humic substance in decomposing leaves depends on the conditions under which decomposition takes place; it declines when repeated desiccation of the leaves occurs and to any considerable extent.

6. — Although the decomposition of the vegetable residue lasted 100 days, the quantity of humic substance formed in the first 8 days was not increased, and after 156 days its solubility in water had completely disappeared.

853 – **On the Nutrition of Green Plants by means of Organic Substances.** — RAVENNA CIRO, in *Atti della Reale Accademia dei Lincei, Serie Quinta, Rendiconti, Classe di scienze fisiche, matematiche e naturali*, Vol. XXV, No. 9, pp. 649-655, figs. 3. Rome, May 7, 1916.

Work carried out in the Laboratory of Agricultural Chemistry of the Royal University of Bologna.

In order to ascertain whether plants can live in darkness, provided organic matter is present in their culture medium, maize plants were grown in a sterilised nutrient solution to which glucose had been added in solutions of 1, 4, 6 and 10 per cent. One plant without glucose was kept as a control. They were kept for comparison, some in the light, others in darkness. Their growth was observed and they were examined for the presence or absence of starch in their leaves. It was found that even when the plants are under conditions which enable them to absorb glucose through their roots, no formation of starch takes place in darkness. Further, the most suitable degree of concentration for the glucose seemed to be 1 to 2 per cent.

In order to ascertain whether the plants treated with glucose had produced starch in their leaves, even in the absence of carbonic acid, a plant in nutrient solution with glucose and a control plant were placed in an airtight glass vessel containing a dish filled with caustic potash. Some

leaves of the plant were covered with strips of black paper. On the following day the starch reaction was tested on some of the leaves, and it was found that the leaves of the plants cultivated in the sugar solution only showed a starch reaction clearly on their parts not covered with black paper, while on those of the control plants the reaction was negative.

In order to ascertain whether starch was formed at the expense of the glucose by direct synthesis, or indirectly by a photosynthetic process at the expense of the carbonic acid as a result of its complete oxidation, it was desired to ascertain which part of the solar spectrum might possess most influence on the phenomenon. For this purpose, the previous experiment was repeated, but the colourless glass of the vessel was replaced by blue glass. For control of this experiment, a plant cultivated in a solution free from glucose was placed in a glass vessel of a similar colour to the preceding one, but without caustic potash, and carbonic acid introduced. In this plant, as in that of the previous experiment, the starch reaction was negative on some leaves; on others slight traces of colouring were shown.

This suggests that for the formation of starch in plants growing in a sugar solution, the same light rays are essential which are responsible for the chlorophyll function. The reaction obtained with the blue glass was much below that obtained with white light, and was equal to the reaction shown by the control plants kept in the coloured vessel in the presence of carbonic acid.

It was then thought that if, with a plant growing in a sugar solution, the formation of starch takes place in consequence of the complete oxidation of glucose, by removing from the atmosphere not only the carbonic acid but the oxygen as well, the starch would be prevented from forming as the glucose could no longer oxidise. A plant grown in a sugar solution was therefore placed in a hydraulically closed bomb containing a tube full of stick caustic potash and filled with pure nitrogen. The starch reaction was negative. The experiment repeated several times yielded the same result, although the plants still retained their vitality.

In order to check the preceding experiment, the plant was kept in the bomb without the tube of caustic potash, and in an atmosphere deprived of oxygen, containing in addition to the nitrogen little carbonic acid; the starch reaction was always positive.

The results of these experiments therefore show that:

1) Plants cultivated in glucose solution show the presence of starch in their leaves, even in the absence of carbonic acid, but only when in the light;

2) The region of the solar spectrum which is most effective in the formation of starch, under the above conditions, is the same one which is most active in the chlorophyllian function;

3) Plants grown in a sugar solution in an atmosphere free of carbonic acid and oxygen, do not form starch in their leaves even when exposed to light.

The logical conclusion is that the sugar absorbed by the roots is oxidised in the interior of the plant itself by the atmospheric oxygen until carbonic

acid gas is formed, which gives rise in the leaves to the formation of starch as a consequence of the chlorophyllian function.

The glucose absorbed is readily oxidised in the plant. This also agrees with the experiments of MOLLIARD (*Comptes Rendus de l'Académie des Sciences*, 141, 389-1905), who, in plants treated with glucose, found a greater degree of acidity, which is a sign of the incomplete oxidation of the sugar.

The investigations will be continued, chiefly with substances of the aromatic series, which are also presumed to be energetically oxidised by plants.

854 – **The Influence of Boron on Plant Growth** — I. VOELCKER J. A. [The Woburn Experimental Station of the Royal Agricultural Society of England, Pot-Culture Experiments, 1915, (*b*) The influence of Boron Compounds, on 1) Wheat, 2) Barley], in *The Journal of the Royal Agricultural Society of England*, Vol. LXXVI, pp. 347-351 + pl. 3-4. London, 1915. — II. COOK F. C. (Physiological Chemist. Bureau of Chemistry, U. S. Dept. of Agric.). *Journal of Agricultural Research*, Vol. V, No. 19, pp. 877-896. Washington, D. C., 1916.

I. — Duplicate pot-experiments with boric acid and borax upon wheat and barley; the quantities of the boron compounds used were from 0.0001 to 0.10 per cent. of the element as reckoned on the whole content of each pot.

On considering the results obtained the following conclusions may be drawn:

1. Germination is retarded when anything over 0.003 per cent. of boron is used, and even 0.001 per cent., more especially with borax, seems to delay germination.

2. Anything over 0.001 per cent. of boron, either as boric acid or borax, will prevent plants from developing and forming grain.

3. A toxic influence is shown with 0,0005 per cent. of boron, but with quantities not exceeding 0.00025 per cent. there is a slightly stimulating effect.

4. The effects generally are more marked with borax than with boric acid.

II. — The experiments reported were made in connection with a cooperative study of borax and calcined colemanite (1) as larvicides for the house fly (2) conducted by the Bureaux of Entomology, Chemistry, and Plant Industry, of the U. S. Department of Agriculture. The object of the present paper was to determine the effect of boron-treated horse manure on plant growth, and to study the absorption of boron and its distribution in the roots, stems and fruit of plants grown on soil fertilized with this manure and on soil fertilized with untreated manure. The plants (wheat, beets, tomatoes, cowpeas, lettuce, soybeans, potatoes, corn, oats, radishes, string beans) were grown in pots in the greenhouses of the Department and on open plots at Arlington Experimental Farm, Va; Dallas, Tex.; Orlando, Fla.; and New Orleans, La. At least four pots for each treatment were employed in the pot tests; the plots at Arlington were $^1/_{20}$ of an acre and the others about $^1/_{60}$ of an acre; the tests with lettuce were carried out on

(1) Hydrous borate of calcium. Cfr. DANA'S *Manual of Mineralogy*, 13th. ed., 1912. (*Ed.*).
(2) See *B.* 1915, Nos. 64 and 117.

benches, each 3 × 5 feet. The percentages of boric acid were calculated on a water and ash-free basis.

The general conclusions may be stated as follows :

1. It apparently made little difference in the quantity of boron absorbed by the plants tested whether boron was added to the soil as borax or as calcined colemanite. The addition of lime with borax had no definite effect in preventing the absorption of boron. Wheat and oats absorbed very little boron, while leguminous and succulent plants absorbed comparatively large amounts.

2. Wheat, beets, cowpeas, and tomatoes grown in pots in the greenhouses contained boron principally in the tops of the plants, and, with the exception of the beets, comparatively little or none in the roots.

3. The fruit of the tomato plants contained only traces of boron, while the fruit of the cowpea contained large quantities. Lettuce grown in the greenhouse absorbed boron in proportion to the amounts present in the soil.

4. Potatoes grown in the open showed, when mature, a small amount of boron in the tops and relatively large amounts in the roots and tubers.

5. The leguminous plants, string beans, soybeans, and cowpeas, which were very sensitive to boron, showed, when grown in plot tests, a more equal distribution of the boron among the roots, tops, and fruit than the other plants tested.

6. Radishes grown in plots contained much larger quantities of boron in the tops than in the roots. Analyses of entire plants of wheat, corn, peas, and oats grown on plots in the South showed absorption of boron in all cases, the peas absorbing the most. All of the control plants contained at least a trace of boron.

7. Samples of soil from some of the control plots showed the presence of acid-soluble boron, while several similar samples of soil from certain boron-treated plots showed no acid-soluble boron. Usually more soluble boron was found in the treated soil than in the control soil.

8. The yield of wheat from a plot heavily treated with borax was 90 per cent. of the manured-control yield and was greater than the yield from the unmanured control. The wheat grains were sound and contained but a trace of boron.

9. The yield of tomatoes in pot tests was unaffected when borax was added in amounts giving 0.0018 per cent. of boron in the soil, but when the amount was increased to 0.0030 per cent., a reduced yield resulted.

10. Numerous factors influence the absorption, distribution and action of boron in plants.

11. Not more than 0.82 pound of borax or 0.75 pound of calcined colemanite should be added to each 10 cubic feet of manure, and when using the boron-treated manure in growing leguminous plants, the manure should be mixed with untreated manure before being applied to the soil. For other plants, boron-treated manure should not be used at a higher rate than 15 tons per acre. Fourteen references are quoted in the bibliography (1).

(1) See *B.* Jan. 1911, No. 38, and *B.* May, 1913, No. 483. (*Ed.*).

855 – **The Influence of Strontium Salts on Wheat** (The Woburn Experimental Station of the Royal Agricultural Society of England, Pot-Culture Experiments, 1915, I. The Hill's Experiments, *a*). — VOELCKER J. A. in *The Journal of the Royal Agricultural Society of England*, Vol. LXXVI, pp. 344-346 + pl. 1-2. London, 1915.

Little being known about the action of strontium on plants, duplicate pot-experiments were made with sulphate, nitrate, hydrate, chloride, and carbonate of strontium ; the salts were applied in quantities supplying the element of strontium in two different amounts, namely, 0.05 per cent and 0.10 per cent, reckoned on the whole of the soil used. The soil was of light and by no means rich character, and twelve seeds of wheat were sown in each pot on November, 1914 ; the crops were cut in August, 1915.

The results are summarised as follows :

1. Strontium in the form of the sulphate, hydrate, and carbonate, is, when given up to 0.10 per cent., practically without effect either on the germination of the seed or the increase of the crop.

2. Strontium useed as strontium nitrate produces an increase of crop, but this cannot be attributed to the presence of strontium.

3. Strontium applied as strontium chloride has a retarding effect on germination, and when used in quantity approaching 0.10 per cent. of strontium, has a distinctly toxic effect.

856 – **Experiments in connection with the Assimilation of Potassium and Sodium Ions by the Sugar Beet.** — STOKLASA JULIUS, in *Biochemische Zeitschrift*, Vol. 73, Nos. 3 and 4, pp. 260-312. Berlin, March 24, 1916.

A discussion of the experiments of other scientists is followed by a description of those of the writer ; the object of the latter was to determine :

*a*) The value of potassium chloride and sodium chloride in the production of substance in the root of the beet ;

*b*) Why calcareous soils promote assimilation of potash by the beet and increase the weight and sugar content of the root ;

*c*) The behaviour of calcium chloride in the presence of potassium chloride and sodium chloride ;

*d*) The influence of sodium and potassium chlorides on the development of the sugar beet in the different periods of growth.

For this purpose sugar beets " Wohantas Zuckerreiche " (Wohanta variety rich in sugar) were planted, one in each pot containing 18 kg of a earth manured with different doses of salts. During these experiments, divided into 5 series, the following facts were observed :

1) potassium chloride and sodium chloride increase both the weight of the root and its content of sugar if used separately in a decinormal solution. The potassium ion produces a greater increase than the sodium ion, so that it is really possible to attribute a specific action to it.

2) A stronger concentration of the sodium chloride ($^2/_{10}$ N.) results in a reduction of weight and sugar content in the root. In this concentration, potassium chloride also fails to promote the growth of the plant. A still stronger concentration of potassium chloride ($^3/_{10}$ N.) reduces the percentage of dry matter in the root, and consequently the total quantity of sugar form-

ed, but the percentage of sugar in the root is not changed to any marked extent.

3) An increase of the dry substance and the sugar content is secured by administering sodium chloride and potassium chloride together. A physiologically balanced salt solution, in which the toxic action of the two salts is mutually neutralised, then forms in the soil. To neutralise the toxic properties of a $^3/_{10}$ N. solution of potassium chloride only a $^2/_{10}$ N. solution of sodium chloride is needed.

4) Calcium carbonate employed in a $^3/_{10}$ N. solution in the presence of corresponding quantities of potassium chloride and sodium chloride not only acts favourably on the growth of the root and its sugar content, but is also able to counteract the toxic effect of abnormal quantities of potassium chloride or sodium chloride administered either separately or together. The maximum production of dry substance and sugar is obtained by using the 3 salts (KCl, NaCl, and $CaCO_3$) together. Calcium carbonate especially promotes the growth of the root.

5) The toxic effect of potassium chloride and sodium chloride is counteracted by calcium chloride, but this phenomenon affects rather the content of sugar than the quantity of dry substance. The maximum sugar production was obtained by using the 3 chlorides together.

6) Sodium chloride and potassium chloride do not promote the growth of plants during the first 2 periods of development (after 27 and 57 days respectively), if used separately ; but if employed together, the production of vegetable matter increases. In the 3rd period of growth (after 76 days), when the beet is at a more advanced age, the effect of potassium chloride far exceeds that of sodium chloride. On using both salts together, the increase of production in the third period is not equal to that in the 1st and 2nd period of growth.

7) The anatomical changes in the plants are highly characteristic, if potassium chloride and sodium chloride are not used together in the 2nd period of vegetation. Potassium chloride produces well developed, firm leaves, fairly fine, not very curly, having a leaf stalk rich in chlorophyll, while sodium chloride results in softer leaves, with a fair amount of curl, and with leaf stalks reddish at the base.

The potassium ion therefore has a great influence on the firm consistency of the leaves and promotes the formation of chlorophyll, thus forming an important factor in the process of assimilation.

The sodium ion appears to influence the growth of the epidermis of the plant and to a less extent the process of assimilation.

It was also determined in what measure the potassium ion and the sodium ion were assimilated by the beet plant. The following were the results obtained :

(*A*) The assimilation was at its maximum when the two chlorides were together in the soil in a $^1/_{10}$ N. solution, and at its minimum when sodium chloride alone was in the soil.

(*B*) In those cases where the soil contained either sodium chloride or potassium chloride or both together, in different concentrations, 4.16 grms

of $K_2O$ were required, on the average, for the production of 100 grms of saccharose.

(*C*) The quantity of sodium ions assimilated is related to the quantity of potassium ions, but, according to the analyses made, this relation varies very much.

PLANT BREEDING

857 – **" Thule ", a Variety of Wheat suited to Central Sweden.** — NILLSON-EHLE H., in *Sveriges Utsädesförenings Tidskrift*, XXVth Year, Part I, pp. 5-23. Malmö, 1916.

During the period 1889-1913 wheat growing in Sweden increased almost twofold, thanks chiefly to the selection work carried out at the experimental Station of Svalöf, for the purpose of combining in a single variety, the " high productive character of the best types with the " cold resistance " character of the native Swedish wheat.

The increased productivity of grain however was anything but uniform. From a maximum of 200 per cent in the districts of Hallands, Malmöhus and Kristiastads, and generally throughout Southern Sweden (Scania), a minimum of 20 to 30 per cent is reached in the central provinces (Svealand). What is the season of this? In Scania, during the period 1889-1913, the native wheat was gradually replaced by more productive kinds, while the area sown also increased. On the other hand in Svealand this substitution was only possible within very narrow limits, chiefly owing to the special climatic conditions, which involved very cold winters and long periods of drought in summer. For the wheats to be cultivated in the central provinces, therefore sufficient cold-resisting powers and earliness are required to ensure normal ripening and a good yield of grain. These circumstances render the work of hybridisation and selection very difficult, as it is necessary to exclude some of the types which, though among the best in point of yield, are not sufficiently resistant to low temperatures. On the other hand, the increase of the area under wheat in Svealand, the good quality of the soil and the conditions of the agricultural environment, which are as favourable as possible, fully justify all the investigations and work which have for their object the creation of types better adapted to the climate, and at the same time having a high cropping power.

From 1904 onwards the writer has been working at the following problems ; 1) the improvement of local native types by selection ; 2) creation of new kinds by crossing with the native form ; among these crosses the best results were obtained by hybridising the native with the " Pudel " ; and afterwards, by perfecting the resulting products by continuous work of selection a new variety was fixed, *Thule I*, presenting the following scheme of characters :

| | Pudel | Thule | Native |
|---|---|---|---|
| Productivity | + | + | — |
| Resistance to cold | — | (+) | + |
| Resistance to rust | + | (+) | — |
| Rigidity of culm | + | + | — |
| Earliness | — | (+) | + |
| Quality of grain | — | (+) | + |

As will be seen, *Thule* I represents a combination superior as regards characters to that of each of the parents. In productivity (3943 lbs. per acre) it is nearly equal to the "Pudel" (3930 lbs per acre), but is considerably superior to it in earliness and cold resistance, as was ascertained particularly during the winter of 1912-1913, when the sowings were very much injured by the low temperatures.

*Thule II*, resulting from the same cross and isolated by the writer at Svalöf, is still earlier. It is as early as the native type and is more productive than *Thule I*. These two kinds are distinguished from the native Swedish variety by their high resistance to rust. There is consequently no doubt that the *Thule* wheat is superior to all others hitherto tested in Svealand, where it may be introduced with the certainty of success.

As regards improvement of the native varieties by direct selection, the pure line 0750 (of Latorpshvete) from Svalöf was cultivated for 3 years at Ultuna. It is distinguished by its higher cropping power, and could perhaps furnish good material for crosses.

Although the *Thule* wheat is very resistant to cold, it still remains inferior to the native types; it must therefore be improved in this direction. With this object from 1913 onwards, a series of hybridisation trials were undertaken of *Thule I* and *Thule II* with the Swedish native wheat; the preliminary results hitherto obtained fully justify the method adopted and hold out the best prospects.

858 – **Experiments on the Germination Capacity of Beet Seeds in Bohemia.** — I. URBAN J. and VITEK E., Influence of very low temperatures on the germination capacity of beet seeds, in *Zeitschrift für Zuckerindustrie in Böhmen*, 40th year, No. 7, pp. 29-300, tables. Prague, April 1916. — II. VITEK E., Investigations on the mode of determining the germinating capacity in beet seed. *Ibid.* No. 8, pp. 363-381, tables. May 1916. AGRICULTURAL SEEDS

I. — *Influence of low temperature on the germination capacity.* In a first experiment, 100 grms of thoroughly ripe dried seeds were divided into 2 groups, one of which was exposed for half an hour to the low temperature produced by liquid air allowed to evaporate spontaneously.

In the 2 groups of seeds, the germination capacity was next ascertained by placing them on blotting paper in a thermostat with a temperature varying from 20 to 30° C.

As early as 3 days later, it was found that the vitality of the seeds subjected previously to a temperature of – 180° C. had not diminished. Fifteen days later, 95 per cent of the non-frozen fruits and 96 per cent of the fruits exposed to the liquid air had germinated. It is evident from this experiment that the strongest frosts do not impair the germination capacity of seeds with normal water content.

In a 2nd experiment, the object was to study the behaviour of seeds harvested in wet weather. For this purpose 4 samples of seeds were used containing about 20 per cent of water when harvested. The seeds of each of the samples were divided into 3 groups equal in weight and volume, each containing 100 fruits, and for each sample one of these groups was placed in liquid air; 3 groups remained in it for 2 hours, and one group from 6 to 72 hours.

From the results summarised in the table it is evident that the seeds had, generally speaking, germinated badly, but that freezing for 72 hours had not affected their germination capacity. This experiment therefore proves that it is needless to protect seeds kept dry against frost, as frost only impairs the germination capacity when the seed contains an abnormal (excessively high) percentage of water. It may also be concluded that by drying the seeds artificially not only is their keeping power increased, but their germination capacity is maintained, especially if the seed was wet at the time when harvested.

II. — *Investigations on the mode of determining the germination capacity.* While the method now employed for determining the purity of beet seeds gives fairly accurate and concordant results, the determination of the germination capacity hitherto has remained rather defective as is shown by the relatively large differences in the results of experiments. It was consequently proposed to study this latter question, endeavouring in particular to ascertain whether, for determining the germination capacity, blotting paper or sand gives the best results. Among the samples studied in 1913 by the seed test Station of the "Landeskulturat" of Bohemia, 26 typical samples were chosen for comparative determination of the germination capacity on blotting paper and on sand, always using 100 fruits of each kind in 3 sets of experiments.

It results that blotting paper is better than sand. In 20 samples on blotting paper (77 per cent. of the cases) the germination capacity was better than on sand ; in 9 samples the number of germinated seeds exceeded that of the samples on sand by 1 to 5 per cent; in 10 samples the percentage was 6 to 10 per cent., and in 1 sample 11 to 13 per cent. The same germination capacity on paper and on sand was observed in 2 samples (8 per cent of the cases), while the germination capacity was only greater on sand than on paper in 4 samples (15 per cent of the cases).

The results speak still more clearly in favour of the paper on considering the number of germs. Among the 26 samples studied, 23 (88 per cent. of the cases) gave a larger number of embryos on blotting paper than on sand and only in 3 samples (12 per cent. of the cases) did the fruits give a larger number of embryos on sand.

Analogous results were obtained in 1914.

It is concluded from these experiments that determination of the germination capacity on paper gives better results than on sand ; it is therefore recommended that test Stations should discontinue the sand method in favour of the blotting paper method.

CEREALS

850 – **The Wheats of the State of Washington, U. S. A.** — SCHAFER E. G. and GAINES E. F. in *State College of Washington, Agricultural Experiment Station, Pullman Washington, Bulletin*, No. 121, 16 pp., 2 fig. Pullman, Wa., February 1915.

In the State of Washington, many kinds of wheat are cultivated, mostly introduced into that region, but partly native, and resulting from the different conditions of environment in the various parts of the State. Mixing the different wheats in the fields or on the markets causes a reduction in price, and it is therefore desirable that the number should be limited and

only the best ones should be cultivated in the different parts of the State. The writers describe some of the most important varieties, namely :

1) *Bluestem*, grown largely in the highest parts as spring wheat, sometimes even as winter wheat ;

2) *Red Russian*, the winter wheat most widely grown in the region of Palouse, ripening late and resistant to weeds ;

3) *Hybrid* 143, produced by Prof. W. J. SPILLMAN at the scientific agricultural Station of the State of Washington by crossing White Track and Little Club ; high cropping power ; may be either spring or autumn sown ;

4) *Jones Winter Fife*, the chief winter wheat in the driest part of the State ;

5) *Turkey Red*, the only bearded winter wheat grown in the State of Washington ; yields a good hard grain ; not much cultivated ;

6) *Winter Bluestem*, winter wheat obtained by crossing Turkey and Bluestem, combining the cold resistant powers of the former with the ear and grain characteristics of the latter ;

7) *Forty Fold* (also called *Gold Coin*), the earliest wheat grown in the Palouse region.

8) *Marquis*, recently introduced from Canada, a very early spring wheat ;

9) *Triplet*, a new composite hybrid, not yet distributed to farmers ;

*Analyses of Wheat in the State of Washington.*

| VARIETY | Flour per cent. | Dry gluten per cent. | Nitrogen per cent. | Average quality value |
|---|---|---|---|---|
| Hybrid 128 | 78.42 | 16.2 | 2.185 | 114.8 |
| Hybrid 143 | 79.59 | 13.0 | 2.120 | 107.8 |
| Red Russian | 82.96 | 10.0 | 1.785 | 93.0 |
| Hybrid 123 | 77.60 | 13.0 | 1.955 | 103.4 |
| Forty Fold | 82.44 | 13.3 | 2.015 | 106.6 |
| Jones Winter Fife | 80.05 | 9.9 | 1.850 | 93.5 |
| Little Club | 78.32 | 10.0 | 1.830 | 93.4 |
| Hybrid 108 | 76.94 | 9.7 | 1.865 | 92.2 |
| Turkey Red | 78.34 | 14.3 | 2.185 | 111.7 |
| Winter Bluestem | 80.75 | 10.0 | 1.940 | 97.5 |
| Triplet | 75.80 | 11.0 | 1.950 | 98.5 |
| Hybrid 60 | 81.90 | 11.7 | 1.615 | 94.5 |
| Hybrid 150 | 79.32 | 8.2 | 1.725 | 86.2 |
| Bluestem* | 81.97 | 10.0 | 2.065 | 98.6 |
| Marquis* | 73.05 | 14.2 | 2.190 | 105.9 |
| Red Chaff* | 81.20 | 10.2 | 2.040 | 99.0 |
| Little Club* | 79.02 | 11.1 | 2.160 | 102.3 |
| Hybrid 143 | 78.62 | 10.2 | 1.990 | 100.2 |
| Averages | 79.3 | 11.6 | 1.970 | — |

* Grown as spring wheats.

10) *Hybrid* 128, produced in 1899 by PROF. SPILLMAN, from a cross between Jones Winter Fife and Little Club ; high crop yield and good quality ; stiff straw ; does not shatter.

11) *Little Club* ;

12) and 13) *Hybrids* 123 and 108, originating from a cross between Jones Winter Fife and Little Club ;

14) and 15) *Hybrids* 150 and 63, Cross Turkey Red × Little Club ; the latter, highly resistant to drought, is rapidly increasing in popularity as a winter wheat ;

16-19) *Red Allen, White Elliot, Sonora and Jenkins Club,* spring wheats not much grown, of no great value.

The above winter wheats, cultivated at the Pullman Station of scientific agriculture in 1911, 1912 and 1914, yielded as an average of the three crops from 35.1 bushels (Hybrid 108) to 43.8 bushels per acre (Hybrid 128). Triplet, cultivated only in 1914, gave 53.9 bushels per acre. If the average unit crop produced in a field be taken as 100 for all the wheats tested (with the exception of Triplet), Hybrid 128 gives 105 ; Winter Bluestem 104 ; Hybrid 60, 102 ; Red Russian and Little Club 101 ; the minimum crops were : Forty Fold 89 and Hybrid 108, 84. The percentages differ somewhat, but generally the order of merit remains the same if the results obtained on small test plots are considered. In both instances, Hybrid 108 ranked last.

The analyses of wheats grown on plots in 1914 under uniform conditions gave the results set out in the accompanying table. The last column was calculated in the following way : taking the value of the average of each of the vertical columns as equal to 100, the percentage of flour, gluten and nitrogen was recalculated for each variety, and it was assumed that the average of these three percentages represents the percentage which expresses the quality value.

860 - **Injuries to Rye and Wheat Grain produced by Threshing, and their Consequences.** — WALLDEN J. N., in *Sveriges Utsädesförenings Tidskrift*, XXVIth Year, Part 1, pp. 24-47, 8 tables, 2 figs. Malmö, 1916.

Experiments carried out by the writer prove that the injury caused to grain by threshing, even if very slight, reduces the vitality of the grain, rendering it very sensitive to the action of copper sulphate used for seed disinfection. This sensitiveness is found especially in grain put through ordinary threshing machines. It decreases on the other hand when a small special threshing machine is used, as at Svalöf, and it completely disappears in grains husked by hand. In the latter case, the germination capacity of the grains is not even affected by the use of 10-25 % solutions of copper sulphate.

By means of a new method, of which a description is given later, it was possible to ascertain accurately the location and extent of the injuries in a very large number of grains of different origins. The grain is thus divided into 3 classes : (*a*) grain without injury ; (*b*) with light injury ; (*c*) with severe injury. The sensitiveness of the grain in relation to formalin and copper sulphate varies considerably for the 3 categories, as may be seen from Table I.

The injuries produced by threshing also considerably affect the keeping properties of the grain, particularly when the latter has a large content of water and is exposed to high temperatures. Thus, for recently cropped

TABLE I. — *Sensitiveness of injured or uninjured grain to formalin and copper sulphate.*

| Varieties | Extent of injury | Germination capacity: Untreated grain | | | Grain treated with a 0.3 % solution of formalin | | | Grain treated with a 2 % solution of copper sulphate | | | |
|---|---|---|---|---|---|---|---|---|---|---|---|
| | | germinated % | not germinated % | dead % | germinated % | not germinated % | dead % | germinated normally % | germinated abnormally % | not germinated % | dead % |
| Wheat « Thule 3 » . . | 1/1 | 100 | 0 | 0 | 58 | 3 | 39 | 65 | 21 | 4 | 10 |
| » » . . | 1/2 | 92 | 8 | 0 | 79 | 0 | 21 | 67 | 26 | 5 | 2 |
| » » . . | 1/4 to 0 | 79 | 21 | 0 | 94 | 4 | 2 | 89 | 2 | 9 | 0 |
| Wheat « Våperl » . . | 1/1 | 100 | — | — | — | — | — | 2 | 54 | 0 | 44 |
| » » . . . | 1/2 | | | | | | | 9 | 67 | 0 | 24 |
| » » . . . | 1/4 | | | | | | | 42 | 54 | 0 | 4 |
| » » . . . | 0 | | | | | | | 84 | 16 | 0 | 0 |

TABLE II. — *Reduction of germination capacity sustained in 2 weeks by injured rye grains.*

| Varieties | Percentage of grains in each class of injury: 0 | 1/4 | 1/2 | 1/1 | Germination capacity of whole of grains | Germination capacity in each class of injury: 0 | 1/4 | 1/2 | 1/1 | Percentage of dead grains in each class of injury: 0 | 1/4 | 1/2 | 1/1 | Moisture % |
|---|---|---|---|---|---|---|---|---|---|---|---|---|---|---|
| Rye Stiärn N. 40 . . . . . | 0 | 51.0 | 45.5 | 3.5 | 98.0 | — | 99.0 | 95.5 | 71.5 | — | 1.0 | 4.5 | 18.5 | 19.5 |
| » » » 7 . . . . . | 0 | 38.5 | 46.0 | 15.5 | 84.0 | — | 97.5 | 87.5 | 35.5 | — | 2.5 | 22.5 | 64.5 | 19.5 |
| » » » 19 . . . . . | 0 | 0 | 75.0 | 25.0 | 74.0 | — | — | 68.0 | 36.0 | — | — | 32.0 | 64.0 | 19.3 |
| » » » 30 . . . . . | 0 | 22.5 | 71.5 | 6.0 | 100.0 | — | 100.0 | 98.0 | 100.0 | — | 0 | 2.0 | — | 15.0 |
| Rye Midsommar . . . . . | 0 | 14.0 | 63.0 | 23.0 | 77.0 | — | 93.0 | 79.5 | 61.0 | — | 7.0 | 20.5 | 39.0 | 20.0 |

rye, the badly damaged grain loses a great portion of its germination capacity in 2 weeks (cf. Table II).

The same observations have been made for wheat by testing machine threshed and hand-husked grain.

The method contrived by the writer for rapidly ascertaining the extent of the injuries sustained consist in submerging the grains to be examined in an 0.4 % solution of eosin, and afterwards washing them in water. Where there is a break in the continuity of the integument, the eosine is absorbed, and communicates a conspicuous red hue to the injured portion. For graduating the extent of the injury the following scale has been adopted: O, no

visible or very slight colouring; 1/4, colouring at end; 1/2, one half at least of the surface of the embryo is strongly coloured; 1/1 the entire surface of the embryo is strongly coloured. This very simple system allows the farmer to determine with sufficient accuracy to what extent the injury produced by threshing can impair the germination faculty and the keeping property of grain.

STARCH CROPS

861 – **Cultural, Food and Industrial Value of some Varieties of Potato tested in Hungary.** — SZELL L. (Chair of Chemistry and Technology of the Royal Hungarian Agricultural Academy at Debreczen), in *Kisérletügyi Közlemények* (Bulletin of Hungarian Scientific Agricultural Stations), Vol. XVIII, Part 3, pp. 659-666, tables. Budapest, 1915.

Experiments carried out in 1914 on the test fields of the agricultural Academy of Debreczen, with the 6 varieties of potato — Up to Date, Richter Imperator, Silesia, Böhms' Erfolg, Jubel and Record — planted after autumn rye, in compact sandy soil at about 19 1/2 ins apart. The varieties Jubel, Record, Böhms' Erfolg and Silesia were greenmanured in the autumn, and in the spring given a dressing of 232 lbs. of superphosphate and 155 lbs. of potash salts (40 %) per acre; Up to Date and Imperator received only green manure. The monthly rainfall and average daily temperatures varied as follows from the beginning of April to the end of October.

| | Rainfall | Temperatures | | Rainfall | Temperatures |
|---|---|---|---|---|---|
| April . . . . | 17.1 mm | 11.6°C | July . . . . | 80.5 mm | 21.2° C |
| May . . . . | 32.4 | 11.6 | August . . . | 34.7 | 19.9 |
| June . . . . | 110.6 | 18.4 | September. . | 61.8 | 13.3 |
| | | | October . . . | 70.6 | 9.1 |

Particulars with regard to time of plantation and crop, and also content of starch and dry substance, are contained in Table I,

Table I. — *Yields of the Different Varieties.*

| Varieties | Date of: Plantation | Date of: Crop | Yield of tubers — cwts per acre: 2nd class small tubers | Yield of tubers — cwts per acre: 1st class large and medium tubers | Yield of tubers — cwts per acre: Total | Average content of: Starch | Average content of: Dry matter | Yield of starch and dry matter — cwts per acre: Starch | Yield of starch and dry matter — cwts per acre: Dry matter |
|---|---|---|---|---|---|---|---|---|---|
| Up to date . . . | 16 IV | 19 X | 79.93 | 15.91 | 95.84 | 20.0 % | 25.8 % | 19.17 | 24.73 |
| Imperator . . . . | » » | 19 X | 99.38 | 38.33 | 137.71 | 19.8 | 25.6 | 27.26 | 34.55 |
| Jubel . . . . . | » » | 8 IX | 105.54 | 78.41 | 183.08 | 20.7 | 26.5 | 36.67 | 46.95 |
| Record . . . . . | » » | 8 X | 90.88 | 53.13 | 144.03 | 21.8 | 27.6 | 31.38 | 39.73 |
| Böhm's Erfolg . . | » » | 9 X | 105.73 | 85.26 | 190.99 | 20.8 | 26.6 | 40.88 | 52.28 |
| Silesia . . . . . | » » | 9 X | 91.30 | 96.33 | 187.68 | 20.7 | 26.5 | 38.84 | 49.73 |

The Record variety leads in regard to starch content. Next follow in order of importance: Böhm's Erfolg, Jubel, Silesia, Up to date and Imperator. For yield of starch per unit of area the first place is taken by Böhm's Erfolg followed by Silesia, Jubel, Record, Imperator and Up to Date.

Among the 3 different sizes of tubers (large, medium, small) of the same variety, the maximum difference in the starch content was 5.3 % (Up to Date) and the minimum 0.7 % (Record). The starch content of the small tubers was much below that of the large. On the other hand, the difference beween the starch content of the large tubers and that of the medium was small (these particulars are combined in a table).

In order to ascertain the cooking qualities, the following method was used : After marking all the varieties with a pin, some tubers of similar shape were put into a pot, covered with cold water and slowly cooked on an electric stove, the water not reaching the boiling point until 2 ½ hours had expired. During boiling the potatoes were tested at intervals by means of an iron wire 2 mm. in diameter. They were regarded as cooked when the iron wire passed through 2 tubers at once under a slight pressure, and when, on being cut open they showed all the properties of normally cooked potatoes. The roasting quality was determined as follows: 5 equal tubers of each kind marked were placed in an oven heated to 100° C., the temperature of which was afterwards raised during one hour to 150° C. and kept at this until the end of the tests ; the potatoes taken out from the oven were regarded as thoroughly roasted when the iron wire passed through the tuber easily and divided it into two halves, the latter then showing all the properties of a well roasted potato.

TABLE II. — *Cooking Qualities of the Different Varieties.*

| Varieties | Classification of hardness compared with raw state | Boiling capacity | | | Roasting quality | Taste | Substance |
|---|---|---|---|---|---|---|---|
| | | Temperature maximum | Number of minutes required for boiling | Number of minutes after which tubers crack | Number of minutes required for roasting | | |
| Up to date . . | 1 max | 87° C | 68 | 70 | 83 | excellent | very fine, floury |
| Imperator . . | 2 | 87°.5 | 71 | 81 | 165 | fairly good | fine, » |
| Jubel . . . . | 5 min. | 88° | 74 | 79 | 137 | very good | very fine, » |
| Record . . . . | 3 | 91° | 101 | 92 | 105 | good | fair, » |
| Böhm's Erfolg | 2 | 89° | 87 | 106 | 150 | fair | fair, » |
| Silesia . . . . | 4 | 90° | 94 | 117 | 86 | unsatisfactory | fair, waxy. |

The comparative method adopted for determining the cooking qualities and flavour of potatoes made it clear, as seen from Table II, that the "Up to Date" variety was superior to the others, being the best for human food, after which come the varieties Jubel, Imperator and Record, which may be used for human food ; the sorts Böhm's Erfolg and Silesia, being unsuitable for food purposes, must be classed among potatoes which can be used for industrial objects.

862 - **Influence of Excess of Water in the Soil during the Second Half of the Summer, on the Formation of Secondary Potato Tubers and their Starch Content.** — ARKHANGELSKIJ M. in *Сельское Хозяйство и Лѣсоводство* (Agriculture and Sylviculture), Vol. CCL, LXXVIth Year, pp. 400-406. Petrograd, March 1916.

The formation of secondary tubers of the potato (excrescences of the tuber) is a phenomenon which often occurs, according to Prof. FRUWIRTH, in those years when excessive humidity of the soil follows a period of drought at the moment when, in normal years, ripening of the tubers takes place. Having observed this phenomenon in different varieties of potato, in his experiments conducted in 1914 and 1915 at the agricultural experiment Station of Tambov (Russia), the writer desired to clear up 2 further points of the question: 1) how does the formation of secondary tubers affect their starch content? — 2) how do the different varieties behave in reference to the phenomenon studied, that is to say, what is the proportion of tubers with secondary growths in the different varieties?

The tubers planted on 1914 and 1915 were grown from varieties bought in 1913 in one of the best known farms in the government of Riazan. The following is a summary of the most important results of the experiments carried out.

I. — *Influence of Humidity.* — From the weather records it is evident that during the first half of the summer, that is until the middle of July, the rainfall and consequently the amount of moisture in the soil were normal both in 1914 and 1915. On the 20th, 21st and 22nd July 1914 and the 14th July 1915, however, there were such heavy falls of rain that they exceeded the quantity which had fallen in 2 months in the previous years ; and others followed, so much so that the moisture of the soil reached a very high degree. After the crop it was found that the tubers of all the potatoes exhibited excrescences from the body of the tuber. Such excrescences occurred in two forms: 1) a shrinkage occurred separating the oldest part of the tuber covered with the rough skin from the newest part with a fine glossy and easily detached skin ; 2) or a crop of secondary tubers formed, small and arranged in various ways on the principal tuber, being very easily detached therefrom.

II. — *Behaviour of the Different Varieties of Potatoes with regard to the Excrescences.* — A detailed analysis of the crop led to the conclusion that the different varieties experimented on did not all produce the same proportion of malformed tubers, *i. e.* tubers with excrescences. In order to determine this difference more accurately, the percentage of malformed tubers for each kind was calculated from their number in a given quantity of potatoes. In 1915 these data were completed by also estimating the percentage

TABLE I. — *Formation of Excrescences on the Tubers in the Different Varieties of Potato.*

| Names of varieties | Percentage of deformed tubers in relation: to the total number of tubers tested in 1914 | to the total number of tubers tested in 1915 | to the total weight of tubers tested in 1915 |
|---|---|---|---|
| *Kitchen Garden:* | | | |
| Local white | 65.4 | 70.3 | 76.2 |
| Elongated Royal | 39.3 | 39.6 | 39.5 |
| "Feia" | — | 28.6 | 35.9 |
| "Delicatesse" | 29.5 | 28.5 | 33.3 |
| Rose de neige | — | 25.0 | 32.7 |
| Duchess of Cornwall | — | 25.0 | 31.9 |
| Local red | 12.0 | 21.5 | 28.4 |
| Ever good | 19.0 | 15.2 | 18.1 |
| *Kitchen Garden and Industrial:* | | | |
| Jubel | 65.9 | 45.0 | 56.0 |
| Prof. Woltmann | 35.2 | 34.8 | 36.2 |
| Prof. Maercker | 63.2 | 25.3 | 29.5 |
| Piast | 47.9 | 23.7 | 32.1 |
| Leon | 37.6 | 18.2 | 26.2 |
| A. switez N. 101 | 6.6 | 9.8 | 12.3 |
| "Devant le front" | 3.1 | 8.9 | 9.3 |
| *Industrial:* | | | |
| Richter's Jubilee | 43.3 | 52.0 | 63.8 |
| Alcohol with violet flowers | 76.6 | 40.5 | 53.4 |
| Brocken | 20.5 | 32.0 | 31.4 |
| Prince Bismarck | 17.3 | 21.8 | 13.7 |
| Grif | 18.4 | 20.9 | 26.1 |
| Silesia | 36.1 | 17.7 | 24.4 |
| New Emperor | 18.8 | 14.1 | 16.5 |
| Sas | 6.1 | 6.3 | 10.8 |
| *Forage:* | | | |
| White Elephant | 50.5 | 42.7 | 56.5 |
| Blue Giant | 20.0 | 20.5 | 25.4 |

of malformed tubers relatively to the weight. The results of these determinations are summed up in Table I, where in each group the varieties are in decreasing order of the proportion of malformed tubers.

The figures given in Table I and the other observations made on the cultivations in question lead the writer to suppose that the capacity of resistance to the formation of excrescences is a property of race, which can be fixed by selection, and tests in other localities and on other varieties would be highly desirable in view of the economic importance of the potato.

III. — *Loss of Starch due to Excrescences.* — The determination of the percentage of starch by means of the REIMANN balance showed marked differences between the malformed tubers and those of regular shape.

Table II sums up the particulars in reference to the industrial varieties, the varieties being arranged in decreasing order of the losses of starch sustained.

TABLE II — *Losses of Starch due to Tuber excrescences in Industrial Varieties*

| Varieties | Loss of starch | Varieties | Loss of starch |
|---|---|---|---|
| "Devant le front" . . . . | 4.3 % | Brocken . . . . . | 1.4 % |
| Silesia . . . . . | 3.9 | Grif . . . . . | 1.4 |
| Sas . . . . . | 2.8 | Richter's Jubilee . . | 1.1 |
| Ever good . . . . . | 2.6 | Prof. Wohltmann . | 0.4 |
| Prince Bismarck . . . . . | 2.2 | New Emperor . . . | 0.2 |

863 - **Comparison between the Effects of Manuring Potatoes with Nitrate of Soda and Sulphate of Ammonia** (From the Agricultural Experiment Station of Radomysl, Russia). — ZASUKHIN A., in *Хозяйство* (The Farm), XIth Year, No. 17-18, pp. 297-304. Kiev, May 1916.

Experiments carried out at the Agricultural Experiment Station of Radomysl in sandy soil, *i. e.* poor in nitrogen, and for which nitrogenous manure is of great importance. Two nitrogenous manures were studied: nitrate of soda and sulphate of ammonia. The trials made with the latter manure are particularly important because, owing to the present war, the importation of nitrate of soda into Russia has greatly diminished, while large stocks of sulphate of ammonia have accumulated, and the extensive use of the latter in agriculture is imperative.

In order to make this comparison between the effects of nitrate of soda and those of sulphate of ammonia, the manure was used in two different ways: sown directly on the tubers during planting or spread before this operation. In addition, nitrogen was given to one plot, half in the form of sulphate of ammonia before planting and the other half in the form of nitrate of soda during planting. The manure was put down in this latter way in order to allow for the facts indicated in the literature of the subject as to the injury caused by sulphate of ammonia, as an acid salt, and as to the retention of nitrate of soda by the soil. By applying the sulphate of ammonia to the soil, before plantation, it was desired to combine the most favourable conditions for the utilisation of this manure, as the plant was thus enabled to offer a better defence against its injurious action. By

putting the nitrate of soda on the tuber itself, it was meant to make its utilisation more immediate and thus prevent its being washed away.

In these tests each plot had received per acre 54 lbs of $P_2O_5$ in the form of slag and 40 lbs of $K_2O$ in the form of a potash salt. A control plot was left without nitrogenous manure. To all the other plots manure was given in equal quantities, *i. e.* 396 lbs of nitrate of soda or 264 lbs of sulphate of ammonia. During the experiments not only was a determination of the crop yield made, but many observations on the growth of the plants were carried out. At the end of May the number of germinated plants was calculated, and then every 10 days the height of the aerial parts of the plant was measured. In addition, at the end of the field, from each plot 10 plants were taken, and there were determined : 1) the quantity and weight of the tubers ; 2) the quantity and weight of the stalks of each plant ; 3) the weight of the aerial parts of each.

The most important results of these experiments are summed up in the appended Table.

*Results of Experiments.*

| Manures used in addition to 54 lbs. of $P_2O_5$ as slag and 44 lbs. of $K_2O$ as potash salts | Yield of tubers cwt. per acre | Excess due to the addition of nitrogenous manure cwt. per acre |
|---|---|---|
| None | 46.22 | — |
| Nitrate of soda, 161 lbs., sown | 73.09 | 25.94 |
| Nitrate of soda, 161 lbs., on the tubers | 75.39 | 28.24 |
| Sulphate of ammonia, 107 lbs., sown | 79.02 | 30.875 |
| Sulphate of ammonia, 107 lbs., on the tubers | 85.40 | 38.25 |
| Nitrate of soda, 80 lbs., on the tubers<br>Sulphate of ammonia, 54 lbs., sown | 76.49 | 29.34 |

The comparison between the figures of the Table and the observations made points to the following conclusions :

1) Sulphate of ammonia gave a larger yield as compared with nitrate of soda.

2) A bigger crop was obtained by applying sulphate of ammonia to the tuber than by spreading it before planting.

3) By applying the dressing of nitrate of soda to the tuber, the development of the potato in its first period of growth was considerably retarded. As regards the crop, it appears nearly equal, whether the nitrate of soda is applied to the tuber or is spread before planting.

4) By giving half of the nitrogen in the form of nitrate of soda to the tuber, and the other half in the form of sulphate of ammonia to the soil

where it is spread before sowing, no advantage was secured as compared with manuring the potato with sulphate of ammonia alone.

For a more accurate interpretation of the results of these tests, it should not be forgotten that the spring and the first half of the summer were very dry.

CROPS YIELDING OILS, DYES AND TANNINS

864 – **Wild Oil Plants of Para, Brazil.** — *Chacaras e Quintaes*, Vol. XIII, No. 5, pp. 322-323. S. Paulo, May 15, 1916.

MR. C. PESCE, of Cametá, Para, Brazil, has for several years been studying the oil seeds of the forests and islands in the estuary of the Amazon. He reports the following species, which he uses in his factory of vegetable oils and soaps, and of which he exports part to Europe. This list proves that Para is exceptionally rich in wild oil plants.

*Carapa procera* (=*C. guyanensis*) ("andiroba"); its fruit furnishes an oil used in the manufacture of soap, lubrication and lighting oils, but as it contains a bitter principle it is not edible.

*Myristica* (*Virola*) *Bicuhyba* ("ucuhuba") furnishes a very thick tallow containing a large proportion of stearin, suitable for the manufacture of soap and candles, and, after purification, for food.

*Astrocaryum vulgare* ("tucumâ") yields products similar to those of *Elaeis guineensis*, namely a pericarp oil ("oleo de palma") and a kernel oil ("oleo de palmito"), but its fruits are 10 times bigger than those of the oil palm. — *Astrocaryum Jawary* ("jawary") also yields a pericarp oil and a kernel oil. On the other hand, *A. Mumbaca* ("mumbaca"), *A. peruvianum* ("huycungú"), and *A. rostratum* only furnish an oil extracted from the kernel.

*Bactris major* ("marajá assú"), *B. minor* ("marajá") and *B. goenomoides* ("marajary") have an oily kernel.

*Oenocarpus distichus* ("bacaba"), *O. minor* ("bacobinha"), *O. multicaulis* ("ciambo"), *O. Batana* ("patana") and *Oenocarpus* sp. n. ("bacabão") have seeds which yield a very fine edible oil much superior to that of cotton seeds, but in small quantity only.

Many species of *Altalea* produce kernels which give very high percentages of an edible oil, very sweet, resembling that of the coconut.

*Cocos Inajai* (= *C. equatorialis*) ("jarená") and *C. Syagrus* ("pororema") supply an oil almost equal to that of *C. nucifera*.

*Pentaclethra filamentosa* ("pracaehy") furnishes an edible oil in abundance.

*Pachira aquatica* ("mamorana") yields a highly aromatic and edible fat.

*Erisma calcaratum* ("caramurú" or "jaboty") supplies a very thick fatty substance.

*Lippia* (*Platonia*) *insignis* ("bacury") yields a somewhat resinous fatty substance.

*Bertholletia nobilis* (=*B. excelsa*) ("castanha do Pará") and *Lecythis usitata* ("sapucaia") produce an oil very similar to that of sweet almonds.

*Dipteryx odorata* ("cumarú") supplies a very delicate aromatic oil in abundance.

*Bombax Munguba* (" Monguba ") and *Eriodendron anfractuosum* (= *Ceiba pentandra*) (" sumauma ") yield seeds which furnish an oil similar to that of cotton.

*Guilheminea speciosa* (" pupunha ") has fruits of fine flavour the seeds of which furnish an abundance of oil similar to that of the coconut.

*Sapindus Saponaria* (" saboeiro "), very common in the Lower Amazon; its fruits have a skin which contains about 30 % of saponin, from which a highly esteemed soap is made ; its kernel yields an edible oil very like that of the olive.

*Hevea brasiliensis* (" syringa ") produces a drying oil.

*Sacoglottis Uchi* (" uchy ") furnishes an edible oil.

*Poraqueiba serica* (" umary "), from the pericarp a highly aromatic oil is extracted.

*Theobroma microcarpa* (" cacao-rana "), *T. speciosa* (" cacao-y "), and *T. grandiflora* (" cuprassú ") provide aromatic substances. Their fats are also used as a substitute for cocoa.

*Matisia paraensis* (" capuassurana ") produces oil.

*Copaifera guyanensis* (" copahyba ") furnishes the well known medicinal oil on tapping the tree.

*Sacoglottis amazonica* (" uchy-rana "), *Symphonia globulifera* (" anany ") and *Rheedia macrophylla* (" bacury-pary ») furnish copal and oleo-resin.

The Author points out that he only enumerates the most important and most common plants in the State of Para, and he also gives a list of several other plants the botanical identification of which has not yet been carried out.

865 – **Description of the Varieties of Sugar Cane under Extensive Cultivation.** — JESWIET J., in *Mededeelingen van het Proefstation voor de Java-Suikerindustrie, Archief voor de Suikerindustrie in Nederlandsch Indië*, XXIVth Year, Parts 12 and 13. Soerabaja, March and April 1916. SUGAR CROPS

The importance is emphasised of a good description of the different varieties of sugar cane under extensive cultivation, with a view to ascertaining their individual characteristics, preventing a mixture of the cuttings (" bibit ") used on the plantations and obtaining a guarantee of purity and origin. Besides this, the inspection of the plants and examination of the cuttings imported or purchased from nurserymen is only possible if a precise description of the known varieties is available.

The different proposals of other writers who have dealt with the question of systematising the knowledge of the sugar cane are reviewed and rejected, owing both to the insufficiency and the inconstancy of the characters described.

In the form of the internodes, their colour and the mode of insertion of the leaves, some fairly fixed and absolute distinctive characters were found in the sugar cane from 4 to 9 months old. It is chiefly however in the form of the buds and also the distribution of the hairs over the outer scales of the buds and on the different parts of the leaves, that a sure means has been discovered for identifying the different varieties and combining them in certain groups representing the same characters and probably of the same origin.

A description is given of the 2 most important varieties of sugar cane grown from seeds in Java and designated by the numbers 247 B and 100 P. O. J.

The origin of No. 247 B. is somewhat doubtful and it is probably to be attributed to a cross of the Fiji cane with the Cheribon cane as the female parent.

The variety 100 P. O. J. was obtained by accidental hybridisation of the original black Borneo cane, probably with the Loethers cane. The writer believes that the latter may be identified as the male parent on comparing different characters of the cane 100 P. O. J. with those of the Loethers variety.

A minute description is given of the various morphological characters of these 2 varieties, on the basis chiefly of the insertion and dispersion of the hairs over the buds, and on the shape of the internodes.

866 – **The Problem of Nitrogenous Manuring of the Sugar Cane in Java (Sulphate of Ammonia or Oil Cakes ?); Results of 10 Years of Experiments.** — GEERTS J. M., in *Mededeelingen van het Proefstation voor de Java-Suikerindustrie, Archief voor de Suikerindustrie in Nederlandsch-Indië*, XXIVth year, Part 14. Soerabaja, April 1916.

The importation of sulphate of ammonia generally used for manuring the sugar cane having become very uncertain and difficult, the question of finding a substitute for it is one of primary importance. It appeared possible to find the solution of the problem by making a digest, from one and the same point of view, of all the results obtained for 10 years of experimental manuring of the sugar cane in the field and calculating them uniformly. This has now been done, and the results given by earthnut cakes have been compared with those yielded by sulphate of ammonia.

The conclusion reached is that the former cannot be deemed equal to the latter. A mixture of the two manures gives better results than the use of oil cakes alone.

In rather sandy soils, the oil cakes produce better results than in clayey soils. The nitrogen in sulphate of ammonia not being so expensive as that in oil cakes it is more economical to use the former.

The production of the sugar cane is less when oil cakes are used than with sulphate of ammonia, but the richness in sugar is not affected.

867 – **A Pre-fermentation in Special Stacks of Tobacco.** — DE VRIES O., in *Mededeelingen van het Proefstation voor Vorstenlandsche Tabak*, No. XXIII, pp. 69-88. Semarang, 1916.

In 1914 the tobacco-growing season in a part of Java was marked by great dryness.

The tobacco harvested during these times of drought frequently shows traces of the pressure undergone after fermentation, these traces remaining visible in the form of streaks and spots on the leaves when put up into bundles for the market.

Experiments were made in 1914 to remedy this drawback, which considerably reduces the value of the tobacco. Fermentation stacks were designed the centre of which remained empty, and in which the air could circulate more freely than in the ordinary form of stack. Taking care that the

temperature in these stacks should not exceed 35° C., the results obtained were very satisfactory.

Subjecting the tobacco thus treated to the usual fermentation hardly any trace of pressure could be observed. It is thought that this result may be interpreted as pointing to a slow oxidation, which during the process of slow death of the leaves in the preliminary stacks, destroys certain essential oils which, owing to rapid heat, such as occurs in the ordinary stacks (where the temperature frequently reaches 54° C.), are decomposed, The products of decomposition, impregnating the dry cells, form pressure spots on the leaves, which marks persist during all the subsequent operations of handling the tobacco.

868 – **Investigations into the Combustibility of Tobacco.** — I. DE VRIES O., Method of Research. — II. DE VRIES O., Influence of Manure on the Combustibility of Tobacco. — III. SIDENIUS R., Enquiries into the Combustibility of Tobacco, in *Mededeelingen van het Proefstation voor Vorstenlandsche Tabak*, No. 22. Semarang, 1916. FRUIT GROWING

Combustibility is first of all defined as : "*the time occupied in the combustion of a leaf of tobacco stretched horizontally and ignited near its central part.*" At the same time the colour of the ash in small cigars made with tobacco of the same origin and allowed to burn themselves out was observed. A scale of colours facilitated an estimate of the differences.

According to the results from the experimental fields where the tobacco was treated with different manures, no influence of the manure on combustibility was observed.

It seems as though the properties of the soil and the climate have a predominating influence. A tobacco originally defective in combustibility cannot be improved by a special manure. Only a potassic manure in large quantities, which is then very expensive, may sometimes produce good results. Thus, a dose of 0.75 oz. (20 grams) of nitrate of potash per plant produced some effect.

Flooding of the tobacco fields occasionally during periods of drought may considerably impair combustibility.

A lesser combustibility was found in the leaves near the top as compared with those at the end, especially if the rains do not fall until near the end of the cultivation.

The attempt was made to inject potash salts into the plants, but without positive results.

869 – **Attempted Classification of Pears.** — CHASSET LOUIS. Compte-rendu par GABRIEL LUIZET, in *Journal de la Société Nationale d'Horticulture de France*, 4th Series, Vol. XVII, pp. 74-78. Paris, May 1916.

The idea of classifiyng and determining these fruits was first dealt with by ROBERT HOGG in 1851, then renewed by him in 1884 in reference to apples only. In France, WILLERMOZ made the greatest effort in this direction. In 1912, at the French Congress of Apple Growers at Limoges, two writer JULES JOUIN and LOUIS CHASSET, each submitted a preliminary scheme differing little from each other, although carried out at 600 kilometres distance without any consultation.

M. LOUIS CHASSET carried his scheme into effect. According to his method, the pears are first of all studied as regards the dimensions in height and breadth.

*First class* : Fruit of the same breadth as height.
*Second class* : Fruits broader than they are high.
*Third class* : Fruits higher than they are broad : 1/10 to 2/10, 3/10 to 4/10.
*Fourth class* : Fruits higher than they are broad : 4/10 and more.

The first and second categories comprise the following forms : *spheriform, short turbiniform, short doliform, short cydoniform, maliform and flattened turbiniform.*

The third class comprises: *doliforms, ovoids, turbiniforms, truncated turbiniforms, piriforms, truncated piriforms and cydoniforms.*

The fourth class comprises the last forms adopted : *long piriforms, calebassiforms and oblongs.*

In each of these forms, 21 periods of ripening were created : June, June-July, July-August, etc.

Each of these times of ripening presents a picture in which the colours of the skin of the fruit are noted ; these colours are: dark green, light green, reddish, russet or bronzed ; the yellowish colour put down at first was afterwards struck out as being useless.

After the colour of the skin the next thing dealt with is the stalk, which is divided from the point of view of dimensions into long, medium or short; and of consistency, into fleshy or not fleshy at the base ; and of position, into straight, oblique or arched.

Carrying the selected characters still further, the flesh is next examined as to its colour : white, yellowish, greenish, salmon ; then as to its taste : sweet, acid, wine, musk, tart.

The complete work comprises 5 volumes, the contents of which have been condensed into a single volume which forms a popular edition. Mr. CHASSET, in order to facilitate this demonstration to the public, has prepared 8 tables, summing up the whole of his work. Thanks to these tables, various fruits were classified with great facility and rapidity by a meeting to which Mr. CHASSET submitted his work.

870 - ***Pyrus calleryana*, an Interesting Species of Pear Tree.** — REIMER, F. C., in *The Monthly Bulletin of State Commission of Horticulture*, Vol. V, No. 5, pp. 166-171, 2 fig. Sacramento, California, May 1916.

In 1908, Mr. GEORGE COMPERE, during a voyage in China, was struck by the resistance of a species of pear tree to " pear blight " or necrosis of the bark of the branchs (*Bacillus amylovorus* [Burr.] De Toni); he therefore introduced this species into California, believing it to be the " Chinese sand pear ", *Pyrus sinensis* Lindl. The writer has studied this pear tree, and found that it was not *P. sinensis* but the species *Pyrus Calleryana* Decaisne. *P. Calleryana* occurs very widely in China, where it is found both in the south, the east, the centre and the west. It grows at all altitudes up to 5000 feet. It is distinguished from *P. sinensis* by its leaves, which are relatively shorter, wide, with rounded or widened base, and with rounded or crenate teeth along the edges. In addition *P. Calleryana* generally has

3 or 4 carpels, rarely 2 or 5, while *P. sinensis* generally shows 5, rarely 3 or 4.

*P. Calleryana* has been found highly resistant to pear blight. Inoculation trials carried out by the writer showed that the species, if not absolutely immune, is at any rate very little affected; if the infection develops in the one year old wood, it never gets as far as the two or three year old wood.

In no case does it develop in branches with a diameter exceeding half an inch. A two year old *P. Calleryana* was inoculated at the end of both soft and vigorous branches, as well as in the trunk. The disease did not appear in the trunk, while it did develop in the *P. communis* used as control and inoculated in the same way.

The writer's opinion is that the species in question has not received all the attention it deserves from the point of view of fruit production. At the Southern Oregon Experiment Station, which has perhaps the largest collection of pear tree species in the world, *P. Calleryana* was quite successfully grafted on *P. communis* as well as *P. sinensis*. As soon as the writer has sufficiently large seedlings of *P. Calleryana* he will shield-graft them on different varieties of *P. communis*.

871 – **The Orange Tree in Algeria.** — TRABUT L. in *Bulletin Agricole de l'Algérie-Tunisie-Maroc*, 2nd Series, 21st Year, No. 11, pp. 273-278. Algiers, Nov. 1915.

For some years past the Algerian colonists have been actively growing the orange, and when seeking for information and guidance in reference to starting an orange plantation, they sometimes meet with discordant views. The writer proposes to correct some current errors.

It is asserted that the orange tree will not grow as far down as the Sahara, while according to the writer's testimony there are no better oranges than those gathered in some oases. The "Biskra Blood Orange", which has been grown in that oasis for some years now, is delicious, and fetches very high prices. In the Djerid there are also excellent oranges, and the writer brought back a thoroughly first-class variety from Deggaeh; The free orange stocks there are very fine and covered with fruit; they thrive well beneath the date trees. In the oases, it would be necessary to make provision, as elsewhere, for a grafting stock possessing resistance to gummosis of the tree-foot, which is not done by the natives, who simply sow sweet oranges or graft on to a lemon tree; which makes certain failures inevitable, above all with basin irrigation.

As regards seed plots and plants, an example is reported from Arba, where a settler who undertook the plantation of 247 acres of orange trees sows his Seville oranges on a hotbed beneath a glass frame, early in February. About the 15th April the young plants are put into tapering pots about 10 ins, in diameter on top, and about 11 ins. in height. These pots are buried in the beds early in June; during the summer they are watered frequently, and every month they are given a few grams of blood and superphosphates. At the end of November the plants may easily reach a height of 23 to 29 ins., and three months later, i. e. 13 months after sowing, they can be planted out and grafted seven months afterwards, about the month of October following planting. These trees grow rapidly, and six years after

sowing they are in bearing, and capable of yielding from 400 to 600 fruits. In no case should the orange tree stem be subjected to persistent moisture; the planting must be done so as to keep the top of the root outside the soil, and to prevent gummosis of the foot of the tree the practice of basin irrigation has been everywhere abandoned.

The General Government of Algeria has for the last twenty years made a collection of the best orange trees from different centres of cultivation : Spain, Portugal, Canaries, Italy, China, Japan, Australia, Brasil, Florida, California, etc. In this collection, a quantity of varieties far superior to those already acclimatised are to be found ; these varieties ripen almost successively from November to June, and answer both the requirements of cultivation and trade and the taste of consumers. It woud be of interest to look for a site in Algeria for grape-fruit or " pomelo ", a *Citrus* which should not be confused with the shaddock to which it very closely approaches. The botanical Station of the General Government successfully grows the best varieties of " pomelo ". *Citrus japonica* or "cumquat " is increasingly used in preserves. The " Washington Navel " orange, which has given excellent results in almost all orange-growing countries, should be recommended for Algeria likewise, and some confusion exists when an introduction dating back more than fifty years is spoken of.

872 – ***Diospyros virginiana*** **(" Persimmon ") in the United States.** — FLETCHER W. F., in *U. S. Department of Agriculture, Farmer's Bulletin*, No. 685, 28 pp., 17 fig. Washington, D. C., October 12, 1915.

This Bulletin gives the following general information with regard to *Diospyros :* Botanical classification, Natural distribution, General description, Possibility of improvement, Methods of spread and cultivation, Diseases and pests, Uses of the tree and its products, Recipes for the preparation of cakes, jams, ices, etc. from its fruits, and List of particular varieties selected and cultivated.

*Diospyros virginiana* was described and much esteemed from the early times of the discovery of North America. It is a native of the south-eastern part of the United States, where it abounds in fields and forests. Some cultivated specimens, however, also did well in the States of Rhode Island and New York, which proves that the northern limits of this species may lie very high when aided by cultivation. The region where *Diospyros* produces most and to which it is best adapted, extends from Maryland, Virginia and the two Carolinas westward through Missouri and Arkansas. It thrives in every description of soil. The species is generally diœcious. With regard to the habit of the tree, there are 2 types : one with ascending and the other with descending branches ; some fruits are oblong in shape, others are pear-shaped. The period of ripening varies very much : ripe fruits may be obtained from August to February.

The fruit of *Diospyros virginiana* is far from being as much appreciated as it deserves in its native country, in spite of the fact that it is much more nutrient than the ordinary fruits of temperate countries. The only fruit which can be compared with it is the date. In addition to consuming the

fruit raw, household drinks are made from it, and it is eaten by pigs put out to grass and by dogs.

*Chemical composition of the fruit of Diospyros virginiana (average of 6 analyses made in 1896 at the Indiana Station).*

| | |
|---|---|
| Dry substance | 35.17 % |
| Ash | 0.78 |
| Protein | 0.88 |
| Sugar (Nitrogen-free extract) | 31.74 |
| Cellulose | 1.43 |

A description of the following varieties is given: Burrier, Boone, Delmas, Early Bearing, Early Golden, Golden Gem, Hicks, Josephine, Kansas, Miller, Ruby, Shoto and Smeech.

It is advised that *Diospyros* should be grown both by sowing and grafting.

*Diseases and pests* — This species is exceptionally free from diseases and pests. The most dangerous of the latter is perhaps the "hickory twig girdler" (*Oncideres cingulata* Say), the larva of which bores tunnels in the wood of the young branches. The injury is caused by the mode of oviposition. The adult devours a small amount of bark, generally immediately above or below a bud, and by means of the ovipositor inserts the egg beneath the bark. Generally, several eggs are thus laid alongside each other, so as to form a ring-shaped incision which causes death and fall of the ends of the young branches. For control it is necessary, in June or the beginning of July, to collect the small twigs which have fallen to the ground and burn them, so as to destroy the insects inside.

873 – **The Date Palms of Egypt and the Sudan.** — MASON S. C., in *United States Department of Agriculture, Bulletin* No. 271, 40 pp., 9 fig. + XVI tables. Washington, D. C., September 28, 1915.

The first date seeds imported into the United States came from Egypt. As great confusion exists in the classification of the varieties of this great date-producing region, so much so that the identification of some of the best varieties tried in the United States (Palm woods of Tempe and Mecca) is rendered doubtful, the Research Office in connection with the selection and physiology of cultivated plants, and the Foreign seeds and plant Importation Office of the United States Department of Agriculture, sent the writer, in August 1913, to Egypt and the Soudan to study the varieties of date trees. In the above Bulletin the writer described 22 varieties in Egypt and the Soudan. They comprise the majority of those having any commercial importance, and also several others of less importance but which had hitherto not been described.

The cultivation of the date in Egypt and the Soudan dates back to very ancient times. At present these countries possess about 9 000 000 date palms, the production of which is valued at about 4s. per tree. No more than one fourth of these trees belong to any of the 12 varieties of commercial importance (Aglany, Amhat, Amri, Barakawi or Ibrimi, Ben-

*Meteorological data relating to the three great climatic zones of Egypt and the Sudan and the varieties of date palms characteristic of each type of climate.*

| Zone and locality | Relative average humidity | Mean temperature in degrees C. Annual | Mean temperature in degrees C. From February to October | Units of heat above 18°C. during the period 1st May to 31st October | Varieties of date palms cultivated in the different localities |
|---|---|---|---|---|---|
| *Subtropical seaboard.* | | | | | |
| Alexandria | 68 | 20°.17 | 21°.31 | 1 138 | Aglany, Amri, Bint Aischa, Hayany, Kobi, Samany, Zagloul. |
| Port Said | 74 | 20°.53 | 21°.59 | 1 217 | |
| Gizeh | 69 | 19°.60 | 21°.59 | 1 211 | |
| Abbasia | 62 | 21°.09 | 23°.15 | 1 508 | |
| *Subtropical desert.* | | | | | |
| Bedrashen | — | — | — | — | Amhat, Hamrawi, Hayany, Siwah. |
| Hélouan | 54 | 20°.50 | 22°.52 | 1 442 | |
| Fayoum | — | — | — | — | |
| Siout (Assiout) | 53 | 21°.27 | 23°.38 | 1 748 | |
| Dakleh | 36 | 23°.29 | 25°.78 | 2 042 | Saidy, Sultany, Tamr, Hamrawi, Falig. Barakawi, «Bartamoda», Godeila, «Ibrimin». |
| Assouan | 39 | 25°.17 | 27°.74 | 2 387 | |
| *Tropical desert.* | | | | | |
| Ibrim | — | — | — | — | «Ibrimi», Barakawa, Bentamoda, Gondeila, Kosha, Kulma. |
| Wadi Halfa | 34 | 25°.03 | 27°.52 | 2311 | |
| Merowe | 24 | 26°.58 | 29°.78 | 2 615 | |
| Atbara | 38 | 27°.63 | 29°.42 | 2 475 | |
| Khartoum | 33 | 28°.31 | 29°.83 | 2 442 | |

tamoda, Bint Aischa, Hayany, Saidy, Samany or Rhashedi, Siwak, Tamr and Zagloul). The others are seed trees, producing cheap inferior fruit.

The date cultivation in the Nile valley extends almost uninterruptedly from the Mediterranean coast to Khartoum, for about 1123 miles. This is the tract where, from north to south, it occupies the largest continual extent existing in the world. Bextween Alexandria and Khartoum, which are the outermost points of this cultivation, there is a difference of 10.6° C in the mean annual temperature, and the corresponding mean moisture ranges from 74 % at Port Said to 24 % only in the province of Dongola,

Soudan. For convenience in his work of study the writer divides this regions into three zones : 1) subtropical seaboard, which comprises the delta of the Nile as far as Cairo ; 2) subtropical desert, containing the valley of the Nile from Cairo to Assouan and the western oases ; 3) tropical desert, comprising the parts of the Nile valley where the date is cultivated between Assouan and Khartoum. In the accompanying Table the particulars recorded in 12 meteorological stations of Egypt and the Soudan are condensed, and the varieties of date palms characteristic of each region are grouped. It is seen from this table that 1) the fresh and moist seaboard zone produces few dates for drying and exporting, the production being exclusively dates which are eaten fresh (Bint Aischa, Hayany, Kobi, Samany and Zagloul) ; 2) superior quality drying dates are produced in the moderately hot and dry parts of the subtropical desert zone ; 3) the hottest and least moist part of the subtropical desert zone, and the tropical desert zone, produce almost exclusively the hard dates, self-drying, very easily kept and transported, which make up so considerable a part of the food of the Arab population.

874 – **Raisin Production in the United States.** — HUSSMANN GEORGE C., in *United States Department of Agriculture Bulletin* No. 349, 15 pages, 3 fig. + 9 tables. Washington, D. C., March 17, 1916. VINE GROWING

With the exception of very small quantities produced in Arizona, Utah and New Mexico, all the raisins produced in the United States come from California (1).

The first introduction into California of the species of vines intended for the production of raisins date back to 1851, in which year the Muscat of Alexandria was sown ; in 1861, plants of the stocks of Gordo Blanco and Sultana were imported from Spain, and stocks of red and white Currants from the Crimea.

The first raisins were produced in California in the valley of San Bernardino. In 1873, the production of raisins having amounted to 120 000 lbs., the industry began to assume some commercial importance for California ; the appended summary of the trade shows how rapid its progress was and is. In 1892 the production of California equalled that of Spain ; at present it is about three times as great. The annual consumption of raisins per inhabitant is about 1 $^1/_2$ lbs. in the United States against 5 lbs. in Great Britain.

At present, 110 000 acres are devoted to the growing of grapes to be dried for raisins ; out of 58 countries of California, 11 produce a quantity of any commercial importance, the county of Fresno alone supplies about 60 % of the entire State production. The greater part of the production is yielded by small vineyards of 10 to 50 acres each.

The Alexandria Muscatel, which is the most important raisin stock, always, in addition to the first crop for drying, supplies a good second crop which is made into wines or alcohol, and sometimes a third. The grafting hosts suited to it are, in decreasing order of merit : Riparia × Rupestris 3 300,

(1) See *B.* May 1916, No. 558. (*Ed.*)

*Production and trade in Raisins in California.*

| Year | Production in California | Exports during the fiscal year ending June 30 | | Imports during the financial year ending June 30 | |
|---|---|---|---|---|---|
| | lbs. | Quantities lbs. | Value dollars | Quantities lbs. | Value dollars |
| 1885 . . . . . | 9 400 000 | — | — | 38 319 787 | 2 661 669 |
| 1905 . . . . . | 87 000 000 | 7 054 824 | 372 087 | 4 041 040 | 3 112 985 |
| 1915 . . . . . | 250 000 000 | 24 845 414 | 1 728 547 | 2 802 901 | 2 719 200 |

Riparia × Rupestris 101, Dog Ridge, Riparia × Rupestris 101-14, Berlandieri × Riparia 420 A. Second in order of importance is the Sultana. This vine is well adapted to the following grafting stocks, in decreasing order of merit : Riparia × Rupestris 3 309, Dog Ridge, Aramon × Rupestris Ganzin No. 1, Riparia × Rupestris 101, Lenoir, Solonis × Riparia 1616.

The red Currant or Panariti has been found to be well adapted to: Rupestris St-Georges, Mourvèdre × Rupestris 1202, Aramon × Rupestris Ganzin No. 1, Riparia × Rupestris 3309, Salt Creek and Dog Ridge (arranged in order of merit).

Drying is effected in the sun entirely ; sometimes before drying the grape bunches are washed or steeped in boiling lye (the Author gives two formulae of the latter as used in large establishments).

875 – **Hot Water Treatment of Tree Seeds used in Reafforestation and of poor Germinating Capacity.** — Honing J. A., in *Mededeelingen van het Deli Proefstation*, Xth Year, Part 1, pp. 16-23. Medan, March 1916.

The seeds of *Albizzia moluccana*, *Pithecolobium Saman*, *Mimosa invisa* and *Crotalaria striata* were steeped in warm water at various temperatures in order to ascertain to what extent this treatment would promote germination.

With the seeds of *Albizzia*, the best result was obtained by using water at 60° C. The seeds are dropped into this water, which is then allowed to cool for 3 hours.

For *Pithecolobium* seeds somewhat hotter water (70 to 75°) is preferable.

The seeds of *Mimosa invisa* germinated most easily after a treatment with water at 60-70° C.

With the seeds of *Crotalaria* no advantageous result is obtained by steeping in water.

The above experiments were carried out in Java.

876 – **The Eucalyptus in Algeria.** – Trabut, in *Comptes Rendus de l'Académie d'Agriculture de France*, Second Volume, Year 1916, No. 25, pp. 699-702. Paris, 1916.

As far back as 1862 some plantings of *Eucalyptus* were made in Algeria. There was first some enthusiasm for *E. globulus*, but afterwards preference was given to the Red gum group, and under this name there were propagated *E. rostrata*, *E. rudis* and *E. tereticornis*, often erroneously called *E. resinifera*.

The three species have crossed; they have even hybridised with remoter species, such as *E. botryoides*.

The writer discusses the uses of the *Eucalyptus* and combats the prejudices existing against this tree. Formerly, for instance, its wood was regarded as a bad fuel. The high price of coal however has resulted in trials of wood stoking of furnaces, and it has been found that 563 lbs. of dry branches of *Eucalyptus* can replace 220 lbs. of coal briquettes (1). *Eucalyptus* can also be used for telegraph poles or railway sleepers. Old building frameworks made of *Eucalyptus*, are already in existence. It is also beginning to be esteemed in cart and carriage building. Finally, some very fine " Red gum " furniture places the value of this wood for cabinet making beyond doubt.

The writer points out the following species, indicating the use for which each is best adapted ; *E. globulosus*, very rapid growth in deep soil, utilised in the harbour works of Algiers ; *E. Red gum*, the two hybrid forms *E. algeriensis* and *E. Trabuti* are to be preferred to the original species *E. rostrata*, *E. rudis* and *E. tereticornis* ; *E. cladocalyx* or *corynocalyx*, highly resistant to drought, upright trunk, very regular, hard wood, is suitable for telegraph poles and railway sleepers; *E. diversicolor or colossea*, the Australian " Karri ", very widespread, same uses as the last named ; *E. gomphocephala*, the Touart, and its hybrid *E. gomphocornuta* Trab., a very fine tree, good wood, rare ; *E. occidentalis*, var. *oranensis*, a fine tree in the salt soils of Oran, abounding in the domain of Habra ; *E. robusta*, with the last named in the salt soil of the domain of Habra ; *E. obliqua* or *gigantea*, fine specimens of the forestry Station of Bainem, light wood, easily worked, attains great growth in deep soils ; *E. maculata* very upright trunk, high, resistant wood, difficult to raise in its young stage ; *E. viminalis*, very fine specimens at Djebel-Ouach, Constantine (altitude 3300 feet) ; the seeds should be gathered here in order to grow the tree at Stations of similar elevation in Djebel-Ouach ; *E. botryoides*, a species presenting numerous varieties, probably hybrids, of fine growth ; a selection of these should be made. In *E. botryoides* the leaves have the normal horizontal position ; this species is much more shady than its fellows ; it is a fine avenue tree, with a very beautiful wood which looks like mahogany.

## LIVE STOCK AND BREEDING.

877 - **Experiments in Control of Livestock Epidemics by means of Methylene Blue.** — RAEBIGER and RAUTMANN, in *Berliner Tierärztliche Wochenschrift*, 32nd Year, No. 22, pp. 253-258. Berlin, 1st June, 1916. HYGIENE

Since December 1913, the writers have been conducting experiments with a view to combating various epidemic diseases of livestock by means of methylene blue (*Methylenum caeruleum medicinale* Höchst), introduced into the stomach of the animals. It is well known that methylene blue tends to

(1) See *B.* July 1916, No. 789. (*Ed.*)

make its way into the bacteria, combining with their cell-contents and afterwards killing the organisms. Very important experiments in this connection have been made up to the present at the agricultural experiment Station of Vermont (United States) for prevention of epizootic abortion in cows. Among 92 cows infected with the abortion bacillus, and to which the methylene blue had been administered, no actual abortion occurred.

The experiments carried out in America were repeated by the writers, but they are not yet able to pronounce an opinion as to their accuracy, the trials not yet being completed. In the treatment of swine fever and infectious enteritis, results have already been obtained which constitute an inducement to continue experimentation with methylene blue on a more extensive scale.

It was first of all observed that 4 pigs evidently ill with fever were cured after a treatment with 0.75 to 1 gr. of methylene blue per day per head. In 4 days an improvement was already observed, and within 3 weeks all the animals were cured. A similar result was secured in other piggeries containing a large number of animals. For the control of infectious enteritis comparatively small doses of methylene blue were used, administered regularly for at least 10 to 14 days. To increase the effect of the internal disinfection, the sties were disinfected every day after removal of the droppings.

To sum up, it may be said that the experiments carried out with methylene blue for the treatment of swine fever and infectious enteritis have shown that cures may be obtained, above all when the disease is located in the digestive organs. In cases of true infectious enteritis with serious pathological changes of the lung, the effect of the remedy was less pronounced ; it seemed if anything to hasten the death of dying animals. When the critical stage of the disease is passed the remedy must not be administered, because its bitter taste tends to reduce the appetite of the animals.

The attempt was also made to ascertain whether methylene blue administered to pigs has a detrimental effect on the fat and the meat. For this purpose, 0.1 gr. of methylene blue per day was administered to a pig of medium weight from the 11th December, 1915 to the 3rd January, 1916 (except from the 21st to the 23rd December), which was then slaughtered.

The post-mortem showed that neither the meat nor the fat were affected and that the symptoms occasioned by the methylene blue were localised in the stomach, where the glandless part particularly was coloured blue. The mucous membrane of the caecum was also slightly blue in colour, but the small intestine in a few places only.

The experiments will be continued by the writers with the support of the Prussian Ministry of Agriculture, at the bacteriological Institute of the Chamber of Agriculture of the Province of Saxony, at Halle a. S.

878 – **Influence of Colour in Horses on the Cure of Mange.** — MASUR, in *Berliner Tierärztliche Wochenschrift*, 32nd Year, No. 25, p. 294. Berlin, June 22, 1916.

When treating numerous cases of mange, it was observed that the colour of the horse has some influence on the cure of the disease. Cure was completed most rapidly in black horses, where often no formation of crusts

even was observed. To cure them it was mostly sufficient to rub them with some ordinary remedy. In bay horses, cure required a greater length of time. In chestnut horses the treatment had almost always to be repeated. In white horses, above all those with a uniform coat, treatment repeated a second time did not always bring about a cure, which observation was confirmed by other veterinary surgeons. These results were not affected, no matter what drug was resorted to for cure.

The writer is at a loss to explain exactly the cause of this phenomenon, but he thinks acarids enter more easily and more deeply into the skin containing no pigment and are thus more difficult to get at by the curative agent than in animals with pigment.

879 – **A Contribution to the Study of the Treatment with Sugar of Surgical Injuries of the Foot in Horses.** — BIMBI PAOLO, in *Il Moderno Zooiatro*, Vth Series, Vth Year. No. 4, pp. 109-115. Bologna, April 30, 1915.

A description of several cases of foot injury which the writer treated with sugar. His observations agree with those of PROF. BUSSANO (1), as regards the absorbent, antiseptic, cicatrising and cleansing powers of sugar. They also prove that sugar possesses the property of promoting the formation both of the soft tissue of the foot and of the horny tissue. As regards this latter property, sugar exceeds all substances in common use hitherto in the treatment of surgical injuries of the foot (SOCIN's powder and paste, naphthaline, carbolic oil, etc.).

880 – **The Importance of Silage in the Economics of Livestock Feeding, on Farms in East Anglia.** — JAQUES G., in *The Journal of the Board of Agriculture*, Vol. XXII, No. 12, pp. 1249-1252. London, March 1916.

FEEDS AND FEEDING

The economics of milk and meat production and of livestock feeding generally, during the winter, constitutes at the present time a problem of the utmost importance, especially in East Anglia. The climate there is mainly of a rather dry character, so that the growing of forage roots is uncertain and the farmer is compelled to look for a solution of the problem along other lines, among which the ensilage of green leguminous forage has latterly assumed special importance.

By this means the Author was able, in Norfolk, to produce milk at a cost of about 3 ⅓ *d* per gal. for food, or, roughly half of the cost of feeding with roots forming the basis of the ration. A similar reduction was found in the cost of production of meat and breeding stock.

The saving of nitrogenous manure realised on this method, by using bought phosphates alone for leguminosae grown every other year, is one of the factors having the greatest influence on the economics of production; besides which, owing to the conditions prevailing in East Anglia, saving of labour is no less important owing to its shortage and high cost. The same applies to forage economy in general, above all as regards concentrates as compared with feeding with a basis of roots. The particulars here reproduced as to the cost of silage, its composition, and the method of feeding

(1) See *B.* February 1916, No. 188. (*Ed.*)

it to cattle, were taken by the writer from the accounts kept on his farm in 1915, after 3 years' use of silage. The farm comprises 105 acres of arable second-rate heavy land, and 45 acres of pasture.

*Cost of growing one acre.*

| | £. s. d. |
|---|---|
| Rent | 1. 0. 0 |
| Basic Slag | 12. 0 |
| Ploughing | 10. 0 |
| Harrowing | 1. 6 |
| Seed (1 ½ bush. of tares, ½ bush. of beans, 1 bush. of oats, 1 peck of rye) | 1. 0. 0 |
| Seeding | 2. 0 |
| Rates | 4. 0 |
| Steam Cultivating twice after crop is removed | 1. 0. 0 |
| Rolling | 9 |
| £ | 4. 10. 3 |
| Cost of cutting and getting ready one acre for carting | 11. 0 |

Cost of filling silo 16ft. by 39ft., capacity 20 tons:

| | £ s. d. |
|---|---|
| 8 men at 4*s.* per day for 6 days | 9. 12. 0 |
| 3 boys at 1*s.* 6*d.* | 1. 7. 0 |
| 5 horses at 3*s.* | 4. 10. 0 |
| Engine and driver at £ 1 per day for 6 days | 6. 0. 0 |
| Silage Cutter at 15*s.* per day for 6 days | 4. 10. 0 |
| Coal | 2. 0. 0 |
| Beer | 2. 18. 0 |
| £ | 30. 17. 0 |

13 acres filled the silo to the top, and the *cost of filling per acre* *acre* = £30 17*s.* 0*d.* ÷ 13 = . . . . . £ 2. 7. 6

*Total cost of silage per acre.*

| | £ s. d. |
|---|---|
| To grow | 4. 10. 3 |
| To cut | 11. 0 |
| To fill | 2. 7. 6 |
| Interest and depreciation of silo at 10 per cent. | 1. 3. 0 |
| £ | 8. 11. 9 |

*Ration given to dairy cows from 1st October to 31st December* 1915.

| | |
|---|---|
| 60 lb. Silage | 3. 66 *d.* |
| 24 lb. Turnips | 1. 28 *d.* |
| 1-6 lb. Concentrates (maize gluten at £ 10 per ton) | 1.71 *d.* |
| | 6. 65 *d.* |

This ration given to 17 Red Poll cows, produced during the first three months 32,254 lb. of milk or an average of 2 gal. per day, at a cost of 3.32 *d.*

for food per gal. This low cost was attained in an advanced period of lactation during a period of comparatively low daily production, and it is probably due to the high feeding value of the food forming the *base* of the ration and the small amount of concentrates.

The analysis of the silage gave the following results :

| | |
|---|---|
| Moisture | 61.31 |
| Albuminoids | 4.75 |
| Indigestible Fibre | 11.25 |
| Ash (Mineral matter) | 3.28 |
| Volatile Acid (acetic) | 0.45 |
| Non-volatile Acid (lactic) | 0.78 |
| Digestible Fibre, Chlorophyll, etc. | 18.18 |
| | 100.00 |

Yearling store cattle were successfuly wintered on 40 lb. per head per day of silage with only water in addition. and beef cattle did well when fed similarly to the milking cows. On the basis of these results the writer believes that the silo, besides furnishing a large bulk of valuable food at a low cost, offers the following advantages :

1) The certainty of an abundant supply of forage.

2) Complete suppression of weeds.

3) The forage is put into the silo in June and July, when the land is generally dry and the days are long.

4) There is no risk of loss from frost as with roots.

5) The soil is cleared early and then prepared for growing turnips to be folded off; heavier soils may be sown with mustard for green manure or to be fed off by sheep (" bastard fallow ").

6) It allows of a great saving of labour as compared with roots.

7) More stock can be kept on the farm than is possible with a crop of roots; consequently more dung is available.

It enables a high fertility to be maintained in the soil owing to phosphate manure with slag, the accumulation of nitrogen through pulse-growing, and a greater production of dung.

The milk obtained for the London market was always considered as of excellent quality and good flavour ; its fat content was, in January, from 3.90 to 3.95 % ; that of solids-not-fat from 8.81 to 8.86 %.

881 – **Experiments on the Digestibility of Various Little-used Cattle Foods.** — MORGAN, BEGER, OHLMER, MICHALOWSKI, in *Die Landwirtschaftlichen Versuchs-Stationen*, Vol. 88, No. 3 and 4, pp. 243-290. Berlin, April 20, 1916.

1. — *Foods from the fruits of Phytelephas.* — These foods are sold in Germany under the form of a reddish and also a greyish product. According to the statement of the firm which supplied them, the red food originates from the nut of the Sudan, while the grey food comes from the fruits " guayaquil ", " Carthagena ", " esmeralda ", " tumaco " and " olmedo ". The food was finely ground, but afterwards a coarser product in chips or shavings, as sold by the factories, was used. The reddish food, and also

the greyish, were tried both in flour and in chip form. The fruits used for the manufacture of these foods were dark brown in colour and of the size of a hen's egg. According to the botanical determination the fruits yielding the reddish food belong to the genus *Hyphaene* and those supplying the greyish food to the genus *Phytelephas*. The feeding trials (8 series) were made with 4 sheep and 2 pigs.

The pigs were first given 1200 gr. of hay of a known digestibility per day per head, then 500 gr. of hay were replaced by 500 gr. of the food which was being tested. The pigs, 3 months old, were first given 1 litre of full cream milk (goat's and sheeps) + 500 gr. of sliced potatoes, which latter were after wards replaced by the chips, so that finally the ration consisted of 1 litre of milk + 1200 gr. of chips.

The excrement of both species of animals was gathered from the 10th day of experiment onwards. The feeds employed were of the chemical composition indicated in Table I.

TABLE I. — *Percentage composition of the feeds tested.*

| Components | Reddish food | | Greyish food | |
|---|---|---|---|---|
| | Flour | Chips | Flour | Chips |
| Dry matter | 91.50 % | 89.38 % | 91.38 % | 88.29 % |
| Ash | 2.00 | 1.61 | 2.56 | 1.44 |
| Organic matter | 89.50 | 87.77 | 88.82 | 86.85 |
| Crude protein | 5.19 (= 0.83 N) | 4.75 (= 0.76 N) | 5.44 (= 0.87 N) | 4.75 (= 0.76 N) |
| Pure protein | 5.19 (= 0.83 N) | 4.75 (= 0.76 N) | 5.38 (= 0.86 N) | 4.75 (= 0.76 N) |
| Fat | 6.79 | 7.40 | 2.84 | 1.30 |
| Crude cellulose | 42.98 | 36.85 | 49.98 | 47.42 |
| Nitrogen-free extract | 34.54 | 38.77 | 31.06 | 33.38 |

It will be seen that the protein content does not differ very much in the various groups, but the fat content in the reddish food considerably exceeds that in the greyish food. This larger fat content is, according to the evidence of the microscope, due to the presence of fat globules contained in the seed coat of the Sudan nut. The content of crude cellulose and nitrogen-free extract is more variable, but these variations are if anything due to errors of calculation, and are in reality smaller than shown by the analysis.

For determining the digestibility of the nutrient elements, the method based on the nitrogen insoluble in acid pepsin (1) was chiefly used; taking into account however that the laboratory method most in use is that based

(1) For this method see: *Die landwirtschaftlichen Versuchsstationen*, Vol. 61, p. 12; Vol. 85, pp. 1-104.

on the total nitrogen or that of STUTZER, the writers also ascertained the coefficients of digestibility according these tot wo methods.

Table II indicates the coefficients of digestibility.

TABLE II. — *Coefficients of digestibility of the foods tried.*

| Substances | Sheep | | | | | | Pigs | | |
|---|---|---|---|---|---|---|---|---|---|
| | Flour | | | Chips | | | Chips | | |
| | red | grey | average | red | grey | average | red | grey | average |
| | % | % | % | % | % | % | % | % | % |
| Organic matter | 86.7 | 78.1 | **82.4** | 75.7 | 74.7 | **75.2** | 74.9 | 77.6 | **76.3** |
| Crude protein | 59.2 | 60.6 | **59.9** | 26.3 | 60.5 | — | 46.7 | 57.1 | **51.9** |
| Pure protein | 59.2 | 60.2 | **59.7** | 26.3 | 60.5 | — | 46.7 | 57.1 | **51.9** |
| Fat | 90.6 | 74.7 | **82.7** | 93.4 | 32.3 | — | 88.5 | — | **88.5** |
| Crude cellulose | 98.2 | 91.6 | **94.9** | 86.0 | 77.7 | **81.9** | 85.5 | 84.4 | **85.0** |
| Nitrogen-free extract | 81.4 | 69.6 | **75.5** | 74.3 | 83.8 | **79.1** | 73.1 | 82.9 | **78.0** |

From these figures the following conclusions are drawn :

1) The digestibility of the organic matter and its principal constituents, crude cellulose and nitrogen-free extract, is very good, both in the sheep and the pig. The fat was also well utilised, while the protein was less thoroughly digested.

2) The flour was digested better by the sheep than were the chips, but the difference is not sufficient to justify grinding. It is consequently more economical to use chips for sheep.

3) The pigs utilised the chips as fully as did the sheep.

4) There is only a slight difference in value between the reddish food and the greyish food.

5) Both the flour and the chips were readily eaten by the animals; they never caused any digestive troubles.

6) Crude cellulose particularly is highly digestible by the two species of animals. From this it may be concluded that it is not in a fibrous condition in the fruit, as FINGERLING has proved that fibre is not well utilised by pigs. This fact must be taken into account in forming an estimate of this food.

7) The food from the fruit of *Phytelephas* provides a good source of digestible carbohydrates. Nevertheless they must be regarded as adulterants when mixed with other concentrates (earth-nut meal, linseed meal, etc.). If sold pure and at a low price, the farmer may buy them.

II. — *Hay meal.* — Ordinary hay was finely ground and then administered to 2 sheep and 2 pigs in order to determine its coefficient of digestibility. Of the 2 sheep, one first received 1000 gr. of chopped hay, then 700 gr. of hay were replaced by the same quantity of hay meal; the other re-

ceived 1000 gr. of chopped hay all the time. In the 2nd experiment the rations were changed so that No. 2 also received hay meal.

To the pigs hay meal only was given, at the rate of 1000 gr. per head per day, with 1 litre of full cream milk.

The hay meal sifted through a Basic Slag sieve contained 60 % of fine matter. When examined with the microscope it was seen to consist chiefly of groups of cells with a little cell debris.

The digestibility was calculated from the total content of nitrogen insoluble in hydrochloric pepsin. It gave the following average starch value per 100 kg. of dried substance :

| | Sheep | | Pigs |
|---|---|---|---|
| | Chopped hay | Hay meal | Hay meal |
| Calculated from the total nitrogen . . . . | 25.5 | 26.4 | 17.6 |
| Calculated from the nitrogen insoluble in hydrochloric pepsin . . . . . | 27.4 | 28.2 | 21.7 |

It is evident from these figures that the difference between hay meal and chopped hay in the case of the sheep is so small that it may be entirely disregarded. It may hence be concluded that grinding hay does not increase its digestibility. The pigs utilised hay meal less effectively than the sheep, which is quite intelligible.

The starch value alone however does not furnish a sufficient basis for a fair valuation of hay meal. It must be borne in mind that, owing to the reduction of the work of mastication, the digested nutritive elements are better utilised in the case of hay meal than with ordinary chopped hay. Nevertheless, according to the writers, this advantage may be obtained merely by chopping the hay very small. Consequently the grinding of hay is superfluous.

III. — *Cladonia rangiferina.* — These lichens were gathered in Allgäu (Bavaria), thoroughly dried in the sun and afterwards roughly ground. They were first given to sheep and pigs to see whether they would take them. It was found that at the outset they were reluctantly eaten, but when mixed with good forage the animals consumed them regularly. The quantity absorbed, however, was small. To enable pigs to accept the lichens well the latter must be freed from the disagreeable tannic substances by treatment with a solution of potash.

For the digestion experiments only a small quantity of lichens remained at the disposal of the writers, so that they had to content themselves with making a parallel experiment with one sheep. The lichens were administered without having been previously treated with the solution of potash. The animal was first given 800 gr. of hay of known digestibility after which 400 gr. of hay were replaced by 400 gr. of lichens.

The dry lichens had the chemical composition shown in Table III.

TABLE III. — *Percentage composition of the dry lichens.*

| | | |
|---|---|---|
| Dry matter 91.36 % | Organic matter | 90.18 % |
| | Ash | 1.18 % |
| Crude protein = 0.72 % N. | | 4.50 |
| Pure protein = 0.72 % N. | | 4.06 |
| Fats | | 2.28 |
| Crude cellulose | | 41.01 |
| Nitrogen-free extract | | 42.39 |

The coefficients of digestibility were very low. On calculating them according to the total nitrogen, negative values were obtained. The starch value was likewise negative. All these analyses were confirmed by a microscopic examination of the excrement.

The writers conclude that lichens may be administered to sheep and cattle when there is a shortage of forage, but never to pigs or horses.

IV. — *Bone meal.* — This substance being at present often recommended in Germany as a food for ruminants and pigs, the writers carried out a digestion experiment with 2 sheep. The bone meal was administered to them in the proportion of 200 gr., with the addition of 800 gr. of hay. This ration was readily accepted.

The excrement was collected 10 and 11 days afterwards respectively.

The digestibility was very good for the protein, even reckoning the coefficients according to the total nitrogen. The fat is still more digestible.

Calculating the content of digestible elements according to the total nitrogen, the following figures are obtained :

| | |
|---|---|
| Organic matter | 40.6 % |
| Crude protein | 26.6 |
| Fat | 7.3 |

The content of crude protein calculated according to the nitrogen soluble in hydrochloric pepsin was 31.1 %

On calculating the starch value, by the aid of these figures, no result would be obtained which would allow of estimating the bone meal at its true value, as the result would relate to $^1/_3$ of fat and $^2/_3$ of protein. The protein is contained in it however chiefly in the form of collagen, a substance which is converted into glue during the process of digestion. The glue, in turn, is not a complete nitrogenous substance, as it lacks tryptophane, tyrosine and cystin. It is likewise unknown to what extent it is utilised by animals. Therefore as long as the value of glue and collagen as foods is unknown, it would be wrong to attribute an over-great food value to the organic matter of bone meal.

V. — *Blood meal as a food.* — The blood meal food corresponded in composition to that indicated by Kellner. It was given to 2 sheep in the quantity of 150 gr. along with 1200 gr. of hay.

The excrement was collected for 11 days.

The content of digestible elements in the blood meal according to the experiments, is shown by Table IV.

TABLE IV. — *Content of digestible elements in the blood meal.*

| | Calculated according to total nitrogen | Calculated according to the nitrogen insoluble in hydrochloric pepsin |
|---|---|---|
| Crude protein | 65.5 % | 82.6 % |
| Pure protein | 63.2 | 82.2 |
| Organic matter | 65.4 | — |
| Starch value | 59.4 | 77.3 |

The protein consisting exclusively of pure protein and being highly digestible, the blood meal forms an excellent food which should be bought if not too dear.

In conclusion, the writers say that the determination of the coefficients of digestibility according to the total nitrogen should be abandoned as it often leads to errors. The method based on nitrogen insoluble in hydrochloric pepsin should be adopted, or if this is found too complex, STUTZER's method should be employed.

882 - **Nutritive Value and Digestibility of Wood; Feeding Experiments in Germany.** — HABERLANDT G., in *Forstwissenschaftliches Centralblatt*, 38th Year, No. 6, pp. 275-279. Berlin, 1916.

With the support of Messrs. ZUNTZ and VON DER HEIDE of the Physiological Institute of the Superior School of Agriculture in Berlin, and that of the Prussian Ministry of Agriculture, a digestibility experiment in a respiration chamber was carried out with a sheep for the purpose of determining the nutritive value and digestibility of birch wood. The trees were felled at the end of March, and the trunks, which were 10 to 15 cm. thick, were converted into very fine chips by a paper mill. The microscopical examination of these chips showed that the wood was very finely divided, so that the membranes of almost all the cells were destroyed. The water used in preparing the chips had removed almost the whole of the cell contents, in consequence of which fact the experiment allowed of determining more particularly the digestibility and nutritive value of the cellular membranes.

The composition of the air-dried wood was as follows :

| | |
|---|---|
| Water | 4.56 % |
| Dry matter | 95.44 |
| Ash | 0.46 |
| Organic matter | 94.98 |
| Crude protein | 0.67 |
| Crude fat | 0.45 |
| Crude cellulose | 32.30 |
| Nitrogen-free extract | 61.56 |

The daily ration consisted of : 450 gr. of wood, 30 gr. of wheat gluten, 100 gr. of molasses, 75 gr. of starch, 5 gr. carbonate of lime, and 100 cc. of a saline solution. After a preparatory period of 17 days the period of experiment

proper began, lasting 6 days. It yielded the following coefficients of digestibility for the wood:

| | |
|---|---|
| Organic matter | 50.00 % |
| Crude cellulose | 50.06 |
| Nitrogen free extract | 55.58 |
| Calories | 48.61 |

The digestibility was therefore excellent as regards the non-nitrogenous substances, the crude cellulose and the nitrogen-free extract. For the crude cellulose it is not below that of poor quality hay, and for the nitrogen-free extract it is 55.58 %.

To arrive at the true nutritive value of the chips, allowance must also be made for the greater work of mastication and the loss of elements resulting from fermentation. On deducting the loss of elements, etc., from the above values, there results per 100 gr. of wood fed to the animals, 84.9 calories capable of conversion into animal substance and work. Given that 1 gr, of fat equals 9.5 calories, there are obtained in all from the 84.9 calories 8.94 gr. of fat. This figure is equal to a starch value of 35.8, which in turn corresponds to that of good meadow hay (36.2 according to KELLNER).

A microscopic examination of the excrement showed that it was not only the substances of the lignified cellular membranes easiest of decomposition (hemicellulose and pentosan) which were dissolved but even whole membranes, and that a good result is only obtained if the wood is cut up very fine and its cells are thoroughly torn. Non-observance of these two conditions was the principal cause of the failure of the previous experiments with sawdust.

Prof. RUBNER repeated these experiments on a dog, using the same wood. He obtained almost the same results. The dog, along with the wood ration, also received meat, the digestibility of which was not diminished. The experiments carried out on the dog lead the writer to the conclusion that man is also capable of digesting finely ground birch wood, and he thinks that from 10 to 15 % of rye or meal wheat should be replaced by wood meal in bread manufacture.

883 – **Experiments with Dogs in connection with the Mendelian Laws of Heredity.** — WELLMANN, O., in *Természettudományi Közlöny* (Bulletin of Natural Science), Vol. XLVIII, No. 9-10, pp. 315-320. Budapest, May 15, 1916. BREEDING

After first carrying out crossing experiments on mice, fowls and rabbits, the Author in 1909 crossed a black and tan basset with a spotted fox terrier bitch. The experiments which were continued for 5 years, at the Royal Superior Veterinary College of Budapest, sought to determine the inheritance of the colour and shape of the body of the male basset and the fox terrier bitch. The first cross produced 5 individuals of black and tan colour with white spots on the chest and legs, the stature in all cases recalling that of the sire. This fact seems to follow the law of Mendel in the sense that the black and tan colour and the shape of the body of the basset were dominant over the coloured spots and the normal stature of the fox terrier bitch.

*Results of black and tan basset cross with fox terrier bitch.*

| Number of matings | Progeny | | | | | Shape of body of fully grown dogs | | | | Died | |
|---|---|---|---|---|---|---|---|---|---|---|---|
| | Number | Sex | | Colour | | black and tan | | spotted | | black and tan | spotted |
| | | female | male | black and tan | spotted | basset | fox-terrier | basset | fox-terrier | | |
| 2 . . . . . | 6 | 3 | 3 | 5 | 1 | 4 | — | 1 | — | 1 | — |
| 3 . . . . . | 5 | 3 | 2 | 2 | 3 | 1 | — | 1 | 1 | 1 | 1 |
| 4 . . . . . | 5 | 2 | 3 | 4 | 1 | 3 | 1 | 1 | — | — | — |
| 5 . . . . . | 5 | 1 | 4 | 4 | 1 | — | — | — | — | 4 | 1 |
| 6 . . . . . | 11 | 8 | 3 | 8 | 3 | *4 | 2 | 1 | 1 | 2 | 1 |
| Totals . . . | 32 | 17 | 15 | 23 | 9 | 12 | 3 | 4 | 2 | 8 | 3 |
| Numerical ratio anticipated by theory . . . . . | | | | 24 : 8 | | 11.81 : 3.94 | | 3.94 : 1.31 | | | |

* very short-legged.

The question is next discussed: What will be the result of intermating the above progeny. If, to avoid confusion, only one character at a time is considered (monohybrid cross), the 1st generation should, according to Mendel's theory, beget black and tan individuals and spotted individuals, and individuals with basset stature and with fox terrier stature respectively; all this in the ratio 3 : 1. In the case of the dihybrid cross, the conditions are more complicated, because the different characters are formed into combinations. The writer draws up a table of gametic formulae, in which he collects the 16 theoretical combinations of the determining characters, According ot this table there would be formed in the 2nd generation in addition to the 2 parent types, 2 biotypes : the spotted basset and the black and tan fox terrier. The ratio of the 4 biotypes (differing externally) would be such that among the 16 dogs there would be 9 black and tan bassets, 3 spotted bassets, 3 black and tan fox terriers and 1 spotted fox terrier: each biotype would correspond to a homozygous individual.

While demonstrating theoretically what was to be expected from the 2nd filial generation, the writer reports the further course of these experiments: the animals resulting from the 1st filial generation were mated with each other 5 times, and produced 32 individuals: 23 black and tan and 9 fox colour. This result proves that the inheritance of the black and tan colour of the basset and the spotted colour of the fox terrier follows the Mendelian rule, and that the black and tan is always dominant, while the spotted character is recessive. Thus the ratio of the 5 matings (23:9) agrees with the ratio anticipated by theory (24 : 8).

Of the 32 puppies 11 died, and the remaining 21 grew up well. Of 21 fully grown dogs there were 16 with basset body (one of them very short-

legged) and 5 with fox terrier body. These results therefore prove that in addition to the basset-shaped dogs there were also in the 2nd generation dogs of normal stature giving practically the ratio which agrees with the theoretical calculation (15.75 : 5.25).

On examining the animals resulting from the 1st filial generation from the dihybrid point of view, experiment proves that the different characteristic features underwent combinations which, in addition to the parent types, produced 2 new biotypes : the spotted basset and the black and tan fox terrier. The appended Table shows the results obtained from the matings.

It will be seen from the Table that, of 21 dogs of the 2nd filial generation, there were :

| | |
|---|---|
| 12 black and tan bassets | 3 black and tan fox terriers |
| 4 spotted bassets | 2 spotted fox terriers |

In conclusion, the Mendelian ratios have for the most part been substantiated : whether the results be considered separately or taken in the aggregate, it is found that the resulting ratios are very close to those calculated by theory.

It is thought that on the basis of these experiments in crossing, dog breeders may build up a theory of hereditary transmission of certain characters peculiar to different breeds of dogs.

884 – **Relation between the Quantity of Milk formed and that obtained in Milking.** — CATTLE

ZWART S. G., in *Zeitschrift für Fleisch- und Milchhygiene*, 26th Year, No. 15, pp. 231-234 ; No. 16, pp. 246-250. Berlin, May 1 and 15, 1916.

Agricultural literature contains abundant data in reference to milk and the milk-secreting organs, but few particulars as to the relation between the quantity of milk formed and that obtained in milking. Some experiments were carried out in connection with these questions, the principal results of which are set out in the present work.

According to NUESCH the secretion of milk may be divided into 2 phases ; rest period and milking. The rest period is the interval between two milkings ; the milking represents the phase during which secretion is promoted by mechanical and physical stimulation, and a distinction is made between preparation and execution of the milking. The first phase depends on the chemical factors of the blood which form the milk, while the second phase depends entirely on nervous influences.

The data relating to the quantity of milk formed during the period of rest diverge greatly. Some contend that the greater portion of the milk is formed during the rest period, while others maintain that it is chiefly formed during milking.

As a result of these experiments the Author is unable to confirm the first opinion as being correct. The arguments put forward by the partisans of the second theory, according to which the quantity of milk drawn from the udder exceeds the latter itself in volume, are also controverted. It was possible repeatedly to inject into the udder the quantity of milk pre-

viously drawn from it. In some cases it was even possible to inject twice the quantity of milk previously drawn from the udder.

It was also sought to determine by exact measurements the quantity of milk formed in the udder. Before milking, *i. e.* at the end of the rest period, the udder contains a quantity of milk made of up two parts, *a* and *b*. The part *a* represents the quantity of milk present in the largest galactophorous ducts of the udder (1) and which can be extracted by means of a milking tube, while the part *b* is the quantity of milk contained in the finer ducts and influenced by still other factors (capillarity etc). Part *a* is obtained by putting the milking tube into the channel in the teat. Part *b* is extracted by the Author in the following way : first the milk contained in the main ducts is removed, then the cow is killed, and when the blood has been entirely withdrawn, the teat is removed : it is put into a tureen, cut into pieces and then gently pressed. For this purpose cows yielding from 6 to 12 litres per day were used. The quantity of milk obtained from the small galactophorous ducts varied from 250 to 700 cc. ; it averaged 500 cc.

The experiments showed that the milking tube gave a quantity of milk almost equal to that obtained by remilking the cows after this operation. The quantity of milk formed during the rest period is equal to that found in the main ducts plus the contents of the small ducts *before* the preparation for milking. This latter quantity, as said above, averages 500 cc. From this however there must be deducted the quantity of the milk remaining in the udder from the last milking but one : it is always less than 500 cc. The quantity of milk formed during the milking equals the milk obtained by milking after removing the milking tube plus the milk left in the small ducts *after* milking (less than 500 cc.). Although the ratio between these two quantities of milk varies according to the individual and the excitability of the mammary glands, it may be said that the quantities formed during the period of rest and even during milking are equal in normal cows in good condition of lactation.

This rule is not confirmed when the second phase has been produced by stimulations other than those of the milker's hand. In those cases a larger quantity is obtained from the small ducts. This fact suggests that this stimulation, which leads to a downward movement of the milk, is not sufficient in the second phase to get out all the milk which the udder is capable of holding. In order to secure the whole of the milk the teat must be constantly stimulated.

This fact is of immense importance in connection with the use of milking machines. With mechanical milking, the mechanical stimulation is still greater than with hand milking, but even then milk always remains behind in the small ducts. This stagnation of the milk is injurious and hinders the formation of the fluid.

In the following chapter particulars are given of observations on fatten-

(1) The Author means by "largest galactophorous ducts" those ducts the contents of which are influenced by the same forces as the milk in the ducts communicating directly with the main duct. (*Ed.*).

ed cows and cow yielding an abnormal milk. It was found that the average quantity of milk obtainable from the udder by milking, after removal of the milk contained in the main ducts was not equal to that previously obtained with the milking tube ; the milk which had formed during milking represented 50 % at most of that obtained beforehand with the tube. From the low pressure of the milk in the udder observed after preparing to milk a cow which was developing mastitis, and from the observations of veterinary surgeons to the effect that some diseases of the udder are manifested by a reduction of the yield of good milk several days beforehand, the conclusion is drawn that somewhat abnormal glands are quite well able to form the milk of the first phase, but are inadequate to produce the milk of the second phase with sufficient rapidity. If the milk does not go down, or if it takes some time to descend, or if it descends in a smaller quantity than usual, it may be concluded that the cow is contracting mastitis, unless the reduction of the milk yield is due to nervous influences.

To illustrate the mode of formation of milk, the Author represented by curves the quantities of milk obtained by fractional milking of several cows. He was thus able to show that towards the end of milking more milk is drawn than is formed, so that after some time it is not possible to draw any more milk from the udder ; the cow is then completely milked.

Experiments were also conducted with a view to determining the quantity of milk contained in the main duct and in the teat canal. In this case also the data contained in the literature of the subject diverged. It was formerly generally believed that the main duct always contains a large quantity of milk, but latterly the statement sometimes appears that the main duct and canal of the teat do not contain milk during the period of rest. The writer was able to ascertain, in the case of about 100 cows, that all normal teats contained milk in their duct, and that the most swollen teats contained the smallest quantity of milk.

The fact that during the period of rest the milk does not pass out of the teat is due to the veins which swell and shut off the exit. Therefore milking is only possible when the blood has been expelled from the veins by specific excitation.

The teat canal never contains milk during the period of rest.

885 – **Effect of Water in the Ration on the Composition of Milk.** — TURNER W. E., SHAW R. H., NORTON R. P., and WRIGHT P. A. — *Journal of Agricultural Research*, Vol. VI, No. 4, pp. 167-178. Washington, D. C., April 24, 1916.

Experiments conducted at Brownsville, Tex., by the Dairy Division of the Bureau of Animal Industry, U. S. Department of Agriculture indicate that the feeding of prickly-pear (*Opuntia* spp.) lowers the percentages of fat in milk. In comparison with other feeds, prickly-pear contains a large amount of water and mineral matter. It was thought by the writers that one or both of these constituents might be responsible for the reduction in fat percentage; consequently experiments were conducted to determine the influence of the water; work on the mineral matter is in progress. The literature dealing with the effects of watery feeds or water in the ration upon the quantity of milk produced is reported to con-

tain much contradictory evidence. The difficulty of eliminating all factors except the watery character of the ration is believed to be largely responsible for the conflicting nature of the statements.

The experimental work to determine the effect of water upon the composition of milk was conducted at the Dairy Division farm, Beltsville, Md., and included three different lactation periods. The four following methods for supplying rations of widely different water content were tried: *a*) a full allowance of drinking water as compared with a limited supply, the ration being alike in both cases; *b*) a heavy ration of turnips as compared with one of dry forage; *c*) wet beet pulp as compared with dry beet pulp; *d*) green crimson clover (*Trifolium incarnatum* L.) as compared with the cured hay. Eight cows were used in the experiments conducted by the first method, four in the second, two in the third, and four in the fourth.

In every case except when the crimson clover was fed the amount of water drunk by the different animals as well as the difference in the water content of the forages under comparison, was determined.

With all except one cow in the wet versus dry beet-pulp group, the amount of water in the dry ration did not exceed 75 per cent. of that supplied by the wet ration, and with some cows that were given a limited allowance of water the dry ration contained less than 60 per cent. of the water content of the full-allowance ration. One cow in the wet versus dry beet-pulp group received, when the dry ration was fed, 88 per cent. of the water content of the wet ration.

In the green versus cured crimson-clover group, the former contained 71.23 per cent. water and the latter 8.33 per cent. The daily ration of green clover varied from 40 to 50 pounds per head, and of the cured hay from 16 to 22 pounds per head.

Certain individual cows at times produced milk having an abnormal fat content. This effect was apparently independent of the ration, as it occurred not only with the high water-content ration but with the dry as well. A study of the data obtained in the four series shows that the watery character of the ration has no effect upon the fat content of the milk. There was even less variation in the other milk constituents than in the fat. This indicates that rations of varying water content have no effect upon the composition of milk.

13 references bearing on the subject are quoted.

886 – **The Value of Maize Silage, Fed in Big Rations, in the Feeding Economy of Cattle.** — ALLISON H. O., in *The Breeder's Gazette*, Vol. LXIX, p. 1068. Chicago, May 18, 1916.

The agricultural test farm of Colombia (University of Missouri) recently sold on the Chicago market 5 lots each comprising 6 head of butcher's cattle fattened with different quantities of concentrates (maize, linseed and cotton seed cakes), ensilaged maize forage, and lucerne hay *ad lib.*

The following results bring out clearly the value of ensilaged maize in the feeding economy of fattening oxen, according to the prices per bushel quoted on the market for the foods used: maize, 70 cents; maize silage, $ 4.50; cotton seed meal, $ 37; linseed oil meal $ 37; lucerne hay $ 14

per ton. The maize silage came from a crop which would probably have yielded about 60 bushels of grain per acre and in which the growth of straw was considerable.

The cattle were choice Herefords, bought in the market of Kansas City in such a way as to ensure the greatest possible uniformity, and cost $ 7.64 per cwt. delivered at the farm. After fattening in winter for a period of 133 days, they showed the following increase of weight :

| | Lot I | Lot II | Lot III | Lot IV | Lot V |
|---|---|---|---|---|---|
| Average initial weight per head, lbs. . . . . | 925 | 923 | 938 | 926 | 912 |
| Average final weight per head, lbs. . . . . | 1286.04 | 1249.44 | 1190.77 | 1243.05 | 1206.66 |
| Average increase per day per head, lbs . . . | 2.721 | 2.454 | 1.968 | 2.383 | 2.140 |

consuming per day per head the following average quantities of food (in lbs) :

| | Lot I | Lot II | Lot III | Lot IV | Lot V |
|---|---|---|---|---|---|
| Maize . . . . . | 15.597 | 15.242 | — | — | 15.274 |
| Cotton seed meal . . . | 2.600 | — | 5.055 | — | — |
| Linseed oil meal . . . . | — | 2.540 | — | 5.055 | — |
| Maize silage (ad lib) . . | 17.468 | 16.466 | 36.222 | 37.620 | 16.263 |
| Lucerne hay (ad lib) . . | 3.687 | 2.267 | 3.061 | 4.027 | 3.897 |

The economic result of fattening, according to the market prices of the above foods, was as follows :

| | Lot I | Lot II | Lot III | Lot IV | Lot V |
|---|---|---|---|---|---|
| | $ | $ | $ | $ | $ |
| Cost of increased weight, per 100 lbs. . . . . | 10.42 | 10.58 | 10.15 | 8.57 | 10.88 |
| Selling price in Chicago | 9.60 | 9.75 | 9.65 | 9.65 | 9.75 |
| Average net profit, per head. . . . . | 6.77 | 9.32 | 9.87 | 14.56 | 10.53 |

The highest profit coincides with the minimum use of concentrates and a maximum consumption of ensilaged maize and lucerne hay, while the maximum daily increase coincides with a minimum of profit due to a large consumption of concentrates.

887 – **Scale of Points adopted by the "American Jersey Cattle Club"** — *Missouri State Board of Agriculture Monthly Bulletin*, Vol. XIII, No. 11, pp. 56-57 ; Columbia Mo. November 1915.

The following scale of points has been adopted by the American Jersey Cattle Club for scoring for Jersey Bulls and Cows :

## *Score of Jersey Bull.*

| | Points |
|---|---|
| *Head*, 10: | |
| A — Broad, medium length; face dished; narrow between horns; horns medium in size and incurving | 5 |
| B — Muzzle broad, nostrils open, eyes full and bold; whole appearance vigorous and masculine without any indecision | 5 |
| *Neck*, 7: | |
| Medium length, with full crest at maturity; clean at throat | 7 |
| *Body*, 57. | |
| A — Shoulders full and strong, good distance through from point to point, with well-defined withers; chest deep and full between and just behind the forelegs | 15 |
| B — Barrel long, of good depth and breadth, with strong rounded, well-sprung ribs | 15 |
| C — Back straight and strong | 5 |
| D — Rump of good length and proportion to size of body, and level from hip bones to rump bones | 7 |
| E — Loins broad and strong, hip rounded, and of medium width compared with female | 7 |
| F — Thighs rather flat, well cut behind high arched flank | 3 |
| G — Legs proportionate to size and of fine quality, well apart, with good feet and not to weave or cross in walking | 5 |
| *Rudimentary Teats*, 2: | |
| Well placed | 2 |
| *Hide*, 2: | |
| Loose and mellow | 2 |
| *Tail* 2: | |
| Thin, long, reaching the hock, with good switch, not coarse or high at setting-on | 2 |
| *Size*, 5: | |
| Mature bulls, 1200 to 1500 pounds | 5 |
| *General Appearance*, 15: | |
| Thoroughly masculine in character, with a harmonious blending of the parts to each other; thoroughly robust, and such an animal as in a herd of wild cattle would likely become master of the herd by the law of natural selection and survival of the fittest | 15 |
| | 100 |

## *Score of Jersey Cow.*

| | |
|---|---|
| *Head*, 7: | |
| A — Medium size, lean; face dished; broad between eyes; horns medium size, incurving | 3 |
| B — Eyes full and placid; ears medium size, fine carried alert; muzzle broad, with wide open nostrils and muscular lips; jaw strong | 4 |
| *Neck*, 4: | |
| Thin, rather long, with clean throat, neatly joined to head and shoulders | 4 |
| *Body*, 37: | |
| A — Shoulders light, good distance through from point to point, but thin at withers; chest deep and full between and just back of forelegs | 5 |
| B — Ribs amply sprung and wide apart, giving wedge shape, with deep, large abdomen, firmly held up, with strong muscular development | 10 |
| C — Back straight and strong with prominent spinal processes; loins broad and strong | 5 |
| D — Rump long to tail-setting, and level from hip bones to rump bones | 6 |
| E — Hip-bones high and wide apart | 3 |
| F — Thighs flat and wide apart giving ample room for udder | 3 |
| G — Legs proportionate to size and of fine quality, well apart, with good feet and not to weave or cross in walking | 2 |
| H — Hide loose and mellow | 2 |
| I — Tail thin, long with good switch not coarse at setting-on | 1 |

*Mammary Development.*

*Udder*, 26 :

| | |
|---|---|
| A — Large size, flexible and not fleshy | 6 |
| B — Broad, level or spherical, not deeply cut between teats | 4 |
| C — Fore udder full and well rounded, running well forward at front teats | 10 |
| D — Rear udder well rounded and well out and up behind | 6 |

*Teats*, 8 :

| | |
|---|---|
| Of good and uniform length and size, regularly and squarely placed | 8 |

*Milk-Veins*, 4 :

| | |
|---|---|
| Large, long, tortuous and elastic, entering large and numerous orifices | 4 |

*Size*, 4 :

| | |
|---|---|
| Mature cows 800 to 1 000 pounds | 4 |

*General Appearance*, 10 :

| | |
|---|---|
| A symmetrical balancing of all the parts, and a proportion of parts to each other depending on size of animal, with the general appearance of a high-class animal, with capacity for food and productiveness at pail | 10 |
| | 100 |

888 – **Progress of Guernsey Cattle in the United States according to Particulars of the "American Guernsey Cattle Club".** — CADWELL W. H., in *Hoard's Dairyman*, Vol. LI, No. 18, p. 742. Fort Atkinson, Wisc., May 26, 1916.

On examining the work carried out during the last working year of the American Guernsey Cattle Club, ended 29th April 1916, one fully realises the progress accomplished in the development of this dairy breed in the United States, and above all the continuous increase in the average production as it appears from the "*Advanced Register*".

The register of bulls contains 37 862 head, and that of cows 63 954 head, making a total of 101 816.

Five years ago there were only 44 286 animals registered, which shows that during the last five-year period, the Herd Register exhibited an increase of 130 %. As the importation of thoroughbred Guernseys since 1840, according to the best sources of information, was only 466 bulls and 7 121 cows, it follows that the importations were only 7.5 % of the number of these animals at present alive ; this proves how prolific the breed is in the United States.

There were issued 4 198 certificates of registration of Guernsey cows in the Advanced Register ; 949 of these cows were registered during the last working year which makes an increase of 90 % as compared with the preceding year.

The average production of 4 719 records tested is at present 8805.91 lbs. of milk and 439.15 lbs. of fat. During the last year this average rose by 132.18 lbs. for milk and 5.24 lbs. for fat.

There are at present under test 1 173 cows, belonging to 270 breeders in 28 States ; 70 % of these breeders, or 190, have 854 of these cows (72 %) under the 2 days' test. There are also 18 superior State Schools of Agriculture which keep Advanced Registers for their own dairy herds.

10 Guernsey cows entered in the Advanced Register have a four-years average of 11915.7 lbs. of milk and 630.93 lbs. of fat.

The Club numbers 530 members, of whom 64 joined last year.

Its capital is about $216 251 63 and its expenditure last year $83 272 07.

PIGS

889 – **Pig Breeding and Intensive Maize and Soya Pasturage, in the United States.** — BEAVERS J. C. (Purdue University), in *The Breeder's Gazette*, Vol. LXIX, No. 22, pp. 1160-1161. Chicago, June 1, 1916.

The importance of combining soya with maize in connection with pig breeding is clearly brought out by the facts collected by this writer and due partly to actual practical work and partly to the breeding tests carried out for Purdue University.

From the food trials it has been found that 8.8 lbs. of maize plus 2.2 lbs. of soya are equivalent, for pig fattening, to 15.2 lbs. of maize alone. By combining soya with maize, an intensive pasturage for pigs is obtained, by which the maximum of unit yields may be secured. The following are, in brief, the increases of weight obtained per acre during the experiments and those yielded in practice, together with the rules for combining the two feeds:

*Carroll Co.* (*Indiana*). — A plot of 5 ½ acres put down to maize combined with soya was reserved for pasturing 99 pigs averaging 108 lbs. weight each, for a period of 27 days and gave a total increase of live weight of 5 288 lbs. or 2 lbs. each per day. The presumable crop of maize would have been about 70 to 75 bushels per acre, and that of soya 12 to 14 bushels.

*Clarke Co.* — A plot of 2-3 acre in 15 days produced an increase in weight of 1210 lbs., or 526 lbs. per acre, in 34 pigs, plus a further increase of 74 lbs. obtained with some sows by utilising the pasturage residues. In all a live weight increase of 600 pounds per acre resulted. The anticipated crop would have been about 45 bushels per acre.

In the trials of combining soya with maize the average yield obtained was as much as 61 bushels total grain per acre, and the yield of maize was almost always higher on the parts where it was combined with soya than on those where it was not. In two cases, with non-inoculated soya seeds, there was a yield markedly unfavourable to the combination, owing to the fact that the soya, being almost completely devoid of root nodules, deprived the maize of a good proportion of the soil nitrogen.

For ensilage the combination of soya with maize is also preferable to maize alone. The many trials carried out yielded, on the average, an increase of 2521 lbs. silage per acre over the yield of maize grown alone ; in wet years, an average increase of 3600 lbs. per acre in favour of the combination. Moreover, the resulting forage is richer in protein substances than maize forage alone.

Putting pigs out to pasture forms in turn the best mode of turning the crop to account and many experiments, borne out by practice, have proved that the successive growing for several years of maize together with soya on the same plot, with the object of feeding the standing crop to pigs, does not noticeably reduce the fertility of the soil, because, in addition to

the manuring, a large quantity of organic substance is left on the soil, which is incorporated in the latter by ploughing and promotes fertility.

The combination of soya with maize demands the choice of varieties of soya which mature at the same time as maize, principally in those cases where, to reduce expenses, sowing is done simultaneously. In the United States, in the maize zone, between the 38th and the 41st degree of latitude, the Hollybrook variety possesses this quality.

Three methods of sowing soya are at present in use : 1) some farmers provide the maize sower with special boxes for soya, in order to sow them together ; 2) others mix the soya with dry sifted soil, and distribute the seed with the manure spreader of the maize sower ; they usually put down 12 lbs. per acre of soya seed and 65 lbs. of soil when the manure spreader is adjusted to 75 lbs. per acre; 3) others sow the soya separately after maize, going over the furrow twice, but this method is more expensive. The quantity of 12 lbs. per acre represents approximately 3 or to 4 soybeans to each row.

890 – **On the Value of Lime in Relation to Silkworm Nutrition.** — HATANO IWARICHI, in *Bulletin de l'Association sericole du Japon*, Year II, No. 4, pp. 1-4. Tokio, March 1, 1916. SERICULTURE

For his experiments, the writer used silkworms of the Koishimaru race having but one generation a year. He reared them on the ordinary method up to the end of the 4th moult. At the time of the 5th moult he formed 4 groups of 500 worms each, which he fed with leaves treated : 1) with a solution of calcium bicarbonate ; 2) with a solution of calcium chloride ; 3) with a solution of calcium acetate; the 4th group was fed with untreated leaves (control). All the solutions were of 5 % strength. The solution was spread on the leaves in a very fine spray, to the amount of 4 centilitres per 100 *mommé* (375 gr.) of leaves. When dried the leaves were given to the worms.

On the whole, the worms fed on leaves treated with lime salts grew much more than those of the control group, as is shown by the following weights (in grams) :

| Groups | 100 adult worms | 100 live cocoons | 100 silk cocoons | 100 chrysalids | 100 cast skins |
|---|---|---|---|---|---|
| 1st | 211.35 gr. | 166.53 gr. | 23.25 gr. | 142.42 gr. | 0.87 gr. |
| 2nd | 217.00 | 167.23 | 23.80 | 142.44 | 0.88 |
| 3rd | 217.94 | 169.11 | 23.47 | 144.76 | 0.88 |
| 4th (control) | 196.81 | 157.34 | 22.18 | 134.38 | 0.70 |

The weight of the dried bodies of 100 mature worms, with the intestine entirely emptied, in the case of the groups fed with lime salts exceeded by 4 to 8 grams that of the dried matter of the control group. The weight of the dried matter of 100 live cocoons exceeded that of the control group by 3 to 4 gr., made up as follows :

| | |
|---|---|
| Silk cocoons | 1 to 1.5 gr. |
| Chrysalids | 2 to 2.5 |
| Cast skins | 0.07 |

The percentage of dry matter was also 8 to 15% higher than that of the control group in the mature worms, and 5 to 7 % in the dry cocoons and the silk cocoons.

The weight of calcium contained in the groups under experiment exceeded that of the control group in all cases, both in the mature worms and in the silk cocoons ; in the larvae the excess was 25.14 % in the calcium acetate group, while it was lower than this, namely 3.07 and 11.93 % respectively, in the calcium bicarbonate and chloride groups.

The investigations will be continued in order to ascertain which lime salt is most favourable to the growth of the worms and in what degree of concentration.

It is finally pointed out that according to an analysis by NAGAKA MUNEYOSHI the ash of the ripe Japanese mulberry leaf contains :

| | | | |
|---|---|---|---|
| Phosphoric acid | 12.02 % | Sulphuric acid | 4.65 % |
| Potash | 31.47 | Chlorine | 0.06 |
| Soda | 3.16 | Silicic acid | 1.45 |
| Lime | 33.15 | Oxide of iron | 1.59 |
| Magnesia | 12.48 | | |

Lime is therefore present in a proportion almost three times that of magnesia ; this excludes the possibility of its beneficent action on the larvae being due to an antagonism to the action of magnesia, similar to that observed in plants.

891 – **Study of Sericulture in Madagascar.** — in *Bulletin économique de la colonie de Madagascar et dépendances*, Year 15, No. 1, pp. 1-17, Tananarivo, 1st Half Year 1915.

Before the French occupation, the silk used by the natives was obtained exclusively from *Borocera madagascariensis*, occurring very widely in the central and western parts of the island and on a considerable number of plants. It sometimes becomes a positive pest in the mimosa plantations. It is still regularly reared on the " tapia " (*Upaca clusiacea*) which exist in more or less dense forests on the lateritic hills. The " tsitoavina " (*Dodonea madagascariensis*) and the " ambrevade " (*Cajanus indicus*) are also reared. In the regions of Majunga and Maintirano, *Borocera* lives wild in the *Rhizophora* forests of the coast and the natives gather cocoons at certain periods of the year.

There are other wild native larvae belonging to certain silk-bearing species of *Bombyx ;* namely *B. Radama* and *B. Diego*. They are found in almost all the forests of the eastern slope and the North. The caterpillars have the peculiar feature that they enclose their cocoon in a large envelope which they weave in common and which is sometimes 1 metre in length. Since the French occupation, especially since 1900, the silk industry in the island has been based on the rearing of *Bombyx mori*.

After dealing with the cultivation of the mulberry tree 1) and the technical conditions of silkworm breeding 2), some information is given on the

(1) See *B.* March 1913, No. 267.
(2) See *B.* June 1914, No. 555. (*Ed.*)

production of silkworm eggs, cocoons and silk, and finally an account of government encouragement afforded to sericulture and the future in prospect for this industry in the island.

The Nanisana station annually prepares from 300 to 350 thousand layings of moths, which are distributed free to European and native rearers.

In the Centre of Madagascar the cocoon has retained the classical form of the good French cocoon. As regards their size above all and the quality of the threads, the Madagascar cocoons are comparable, according to competent authorities, with the cocoons of the Cevennes. The experiments carried out at the Public Silk Conditioning Establishment in Lyons and by several spinners in the South of France and the North of Italy plainly show that the silkworm races of Madagascar when subject to continuous and methodical selection can furnish cocoons at least as rich in silk as those of the European breeds.

The raw silk is comparable in all points with the good raw silk of Piedmont and the Cevennes.

The local government, in addition to free distribution of the eggs produced by the station of Nanisana, has distributed more than 200 000 rooted mulberry plants. The " cultivation agents " attached to the public departments demonstrate to those concerned the conditions of silkworm rearing. Finally, premiums are distributed for cocoons at the rate of 3*d*. 2*d*. and 1 $^1/_2$ *d*. per kg. (2.2 lbs.) according to quality.

With regard to spinning, the decree of the 21st July 1910 allows an annual premium for a period of 10 years from the 1st January 1911, of 400 francs per degummer working with more than 3 ends ; another premium of 400 francs is granted for additional degummers at the rate of one additional degummer to every three working with more than 3 and less than 9 ends, and at the rate of one accessory degummer per two degummers working with more than five ends.

892 – **Researches on the Digestibility of Different Foods used for Rearing Young Fish.** — WOHLGEMUTH RICHARD, in *Allgemeine Fischerei-Zeitung*, Year 1915, No. 18, pp. 271-275. Munich, 1915. FISH.

At the Bavarian fish-breeding Station of Wielenbach, the Author carried out feeding experiments in order to determine the digestibility of different foods for fry. For this purpose he employed rainbow trout fry 8 weeks old and of normal development. In order to produce like conditions the food under study was always given in the morning, 12 to 14 hours after the last meal, so that the fry, under the stimulus of hunger, regularly ate their ration. The natural food was generally eaten withtin a few minutes ; the ration was always abundant, and the part uneaten was afterwards removed. After half an hour at least the fish were taken out and studied from the point of view of food digestion. The term « digestion completed » means that the stomach is left quite empty or contains only indigestible remains. Each time at least 10 fish together were taken.

The following were the foods studied ;

1) *Spleen* : It was carefully freed from skin, then forced through a filter to remove all the tougher portions. Before giving it to the fry it

was cut up into small pieces. Two hours afterwards the fish showed a well filled stomach, but no signs of digestion as yet : 4 hours afterwards, signs of digestion were evident ; 5 hours afterwards the contents of the stomach were less in quantity ; 6 hours afterwards 2 fish had their stomachs empty, and 7 hours afterwards digestion was completed in all the fish. The conclusion drawn is that the spleen is digested 6 to 7 hours after feeding.

2) *Liver* : Same preparation as for the spleen. Its digestibility is very different. Some fish were found with their stomachs empty as little as 6 hours afterwards, while in others digestion was only completed 8 hours afterwards. Generally it may be said that digestion is terminated within 7 to 8 hours.

3) *Fish flesh* : The flesh of freshwater fish was given either separately or together with spleen, liver and shrimps to older fry. The fish used for preparing the food were put into hot water and left there from 1 to 5 minutes according to size ; they were then pressed in moulds after removing the skin and bone from the biggest.

Three hours after the meal, the stomach of the fry was still quite full ; 4 hours afterwards digestion was begun,and 6 hours afterwards all the fish had their stomachs empty. The conclusion drawn is that the flesh of fish is completely digested 5 to 6 hours after the meal.

4) *Shrimps* : Shrimps also were only given during the period previous to the stocking of the pond with fry. The shrimps were first left in boiling water for half to three quarters of an hour, then pressed in moulds. Only fry which have reached a certain age readily eat shrimps alone ; for younger fry they must be mixed with soft substances such as liver, spleen etc. At first 50 % of shrimps are mixed with 50 % of liver, etc. Then in proportion as the age of the fry increases the proportion of shrimps is increased, until finally shrimps alone are fed to them.

In the case of the fish receiving shrimps alone digestion was completed 5 to 6 hours after the meal.

(5) *Larvae of Culex pipiens* : These were eaten by the fry within a few minutes : 1 $^1/_2$ to 2 $^1/_2$ hours after the meal digestion was begun. The writer counted a maximum of 18 larvae in the stomach of one fish. Digestion was terminated 4 to 5 hours after the meal. An interesting fact is that the chitinous parts of the larvae remain in the stomach of the fish for a very long time, probably owing to derangements impeding the peristaltic movement of the stomach. The same fact is observed when *Daphnidae* are given.

(6) *Daphnidae* : The larvae of *Daphnia magna* and *Daphnia pulex* were given. They were immediately devoured by the fish, which ate about 20 per head per meal. The first signs of digestion were observed 2 $^1/_2$ hours after the meal, and digestion was completed 3 $^1/_2$ to 4 $^1/_2$ hours after the meal.

*Conclusions.* — Liver requires twice as long as shrimp for digestion. Liver and spleen require most time, the natural food (Culex, etc.) requires the least time. Fish-flesh and shrimps are intermediate between these two groups with regard to the period of digestion. The causes of the easy

digestion of the natural food are : (*a*) the large surface presented by the larvae as a whole, which enables the gastric juice to attack the food thoroughly ; (*b*) the loose consistency of the food in the stomach of the fish ; (*c*) the gastric juices of the larvae etc., which contribute to digestion in the stomach of the fish.

It follows from the above that the natural food is the best for the fry of Salmonids. To the youngest fry, spleen can also be given when the natural food is wanting. When the fry reach a certain age a ration may be given them consisting of spleen plus fish-flesh, or spleen plus shrimps, or again fish-flesh alone. The mixture fish-flesh plus shrimps also gave satisfaction with, somewhat older fry.

893 – **Fish Breeding in Switzerland in 1915.** — *Bulletin suisse de Pêche et Pisciculture* XVIIth year, No. 5, pp. 50-63. Neuchâtel, May 1916.

As during the preceding year (1), 212 establishments were carried on during the incubation period 1914-1915. 128 857 000 fry hatched out from 156 696 000 incubated eggs. Including 63 239 small fish of one summer or one year, 127 694 239 fry were put into public waters under federal supervision. The appended Table gives particulars of the fry resulting from the incubated eggs.

*Number of larvae hatched out.*

| | |
|---|---|
| A. — Native species. | |
| Salmon | 1 337 000 |
| Salmon trout, hybrid | 34 000 |
| Lake trout | 2 655 000 |
| River and stream trout | 9 168 000 |
| Char | 4 456 000 |
| Grayling | 2 632 000 |
| Coregonus | 97 244 000 |
| Pike | 10 706 000 |
| Perch | 130 000 |
| Carp | 205 000 |
| B — Exotic species. | |
| Rainbow trout | 284 000 |
| American char | 6 000 |
| Total | 128 857 000 |

The Confederation paid to the cantons, for transmission to the fish breeders in question, a subsidy of nearly £ 1400 (nearly £ 1500 in 1914) for the

(1) See *B.* 1914, No. 1038. (*Ed.*)

incubation of the eggs and the transfer of the fry to public waters. The canton of Valais is not comprised in the above figures, as the establishments in that canton did not make any application with a view to obtaining a federal subsidy. No fish breeding was carried on during that year in the canton of Appenzell Rh. Int. The Swiss fisheries and fish breeding Society received a federal subsidy of about £ 120. Similarly to other riparian States, the Swiss Confederation made a grant of £ 12 to the International Union of Fishers of the Lake of Constance, for the expense of stocking that lake in 1915. In the same year Swiss fishermen took from that lake, including the lower lake, 331 573 lbs. of fish of a value of over £ 9800 (in 1914, 322443 lb of a value of over £ 9284).

The number of fishery guards in the service of the cantons was 161 during the year 1915, aided temporarily by 19 assistants. These agents received, by way of salary, attendance and travelling allowances, a total sum of £ 4363 (£ 4262 in 1914), of which the Confederation took upon itself £ 2182 (£ 2131 in 1914), or 50 % in accordance with the law. The cantons also expended £ 18 (£ 21 in 1914) for the destruction of animals injurious to fisheries, but the Confederation refunded about £ 15 (£ 9 in 1914).

A course of instruction was given in Lucerne from the 22nd to the 27th February for water bailiffs.

Fish ladders were established in the vicinity of various works (August-Wylen, Laufenbourg) along the Rhine, as well as near the hydraulic power stations of Perlen, in Reuss. Refuges for fish have, in accordance with the instructions of the Swiss Home Office, been built along the altered bed of the Wina, between Reinach and Gotenschwil, on account of the reclamation of the marshes there.

The federal legislation on fisheries has undergone no change. The regulations of the 2nd May 1913 on fishing in the boundary waters between Switzerland and Italy was slightly modified by decree of the 2nd July 191.5

VARIOUS

894 – **Cross between a Wild and a Domesticated Fur Rabbit in order to obtain a Good Fur.** — ZIMMERMANN R., in *Berliner Tierärztliche Wochenschrift*, Year, 32, No. 18, p. 213. Berlin, May 4, 1916.

For some years past experiments have been carried out in Germany by the writer with a view to obtaining a rabbit combining the following three qualities: (*a*) a fur superior to that of the common domesticated rabbit; (*b*) good meat; and (*c*) high resistance to disease. The results hitherto have been as follows.

1) By crossing a wild male (grey coat) with a female of the French silvered breed (black coat with a few white hairs) and a female of the German breed " Edelweiss " (Albino), the offspring were 10 in number, 4 males and 6 females. All the 10 offspring were grey in colour and their physical conformation was that of the wild sire, but they were bigger. Ther meat is lighter but clearly suggests the wild meat. The fur is more supple than that of the sire.

The writer still has 1 male and 2 females of this litter; the other animals were either sold to breeders or killed. These 3 individuals have retained the timidity characteristic of the wild rabbit.

2) A grey male obtained by crossing a wild male with a French silvered female was crossed with the German female " Edelweiss " ; the progeny numbered 4 : 2 black and 2 grey. Of these latter there are still 1 black and 1 grey individual, both having reached half the normal growth. The black rabbit already shows white hairs in the black coat, thus recalling the silvered granddam. These 2 subjects have supple fur, but they still possess the timid character of the wild rabbit.

3) The second litter from the above cross consists of 4 animals now aged 5 weeks, 3 of them being black and 1 grey.

4) On crossing a male rabbit with a female of the same litter originating from the cross wild male × French silvered female, a litter was recently obtained which has not yet been studied, but which meanwhile already discloses the interesting fact that the mating of the parents of this litter, who are brother and sister, is fertile.

895 - **Gum Lac and the Breeding of *Tachardia*.** — I. DUPORT L. L'Insecte à Stick-lac. II. HAUTEFEUILLE L. La gomme laque et son traitement industriel, in *Bulletin économique de l'Indochine*, Nos. 112 and 116, pp. 182-189 and 872-994. Hanoï-Haïphong, March-April and November-December 1915.

This study contains a summary of ten years of research and observations carried out by M. HAUTEFEUILLE. The stick-lac insect, *Tachardia lacca* R. Bld., known also under the names of *Carteria lacca* Sig. and *Coccus lacca* Kerr. is one of the rare useful cochineal insects ; it produces gum lac and also a red colouring substance termed lac dye by the English.

In India, where this product is very important, several species of *Tachardia* are probably known, or at any rate several varieties of *Tachardia lacca*, which explains the contradictions in the information supplied by different authors. DUPORT describes the insect, giving general information as to its life history, with a separate description of the female, the male, and the method of reproduction. He also enumerates the enemies of *Tachardia* and among others: ants, the larval forms of Noctuidae and Tineidae, and some Hymenoptera belonging to the family of Braconidae and Chalcididae.

HAUTEFEUILLE next studied gum lac and its industrial preparation. Gum lac should not be confused with lac of vegetable origin derived from *Rhus vernicifera* in Tonkin. Gum lac is a half-waxy, half-gummy secretion of an insect living in innumerable colonies on some plants in India. It has many important industrial uses, and the trade, as shown by the tables appended to the paper, attains considerable proportions. India exported on the average, during the 11 years 1903 to 1914, 17 736 tons per year of an approximate value of about £ 356 641 at a unit price of 11.68 *d.* per pound. Indo-China during the period 1906-1914, exported on the average 1 092 249 lbs. per year, for £ 24 190, at the average unit price of 5.67*d.* The range of the lac insect lies within a vast rectangle enclosing Tonkin and the northern tracts of British India. *The Dictionary of Economic Products of India* by G. WATT gives the list of the plant species on which the lac insect is able to live ; this list is reproduced by the writer with the addition of some further species reported by the Forestry Department of Assam. This

list comprises among others *Acacia arabica* and *A. catechu* and the genera *Albizzia, Butea, Ceratonia, Ficus, Erythrina, Tectona* and *Zizyphus.*

*Ricinus communis* is included in the list given by the Assam Forestry Department. The principal species, however, on which colonies of *Tachardia* are usually found are chiefly *Butea frondosa, Cajanus indicus, Ficus religiosa, Zizyphus jujuba* and finally *Schleichera trijuga* which supplies the best gum lac.

The writer reproduces the principal passages of a study by MAXWELL-LEFROY on the lac insect *Zizyphus jujuba.* This insect has two generations a year. The eggs hatch in June and the insects develop until the end of September-October, when oviposition takes place. This second generation completes its life cycle about the end of May. The trees require to be cut in time, as it is important that the insects should be inoculated into strong shoots with abundant sap, but the bark of which can be easily attacked by the rostrum of the insect. Inoculation is effected by taking a piece of gum lac in which the eggs are about to hatch ; this is placed between two plates of bamboo and tied to the shoot of the tree or shrub on which the rearing is carried out. The emergence of the insects soon takes place, and in proportion as they are hatched they range themselves round the parent or original gum lac, going up the branch on which they were placed. It is important that they should not be allowed to mount up too near to the end, where they would not find sufficient food. As soon as the insects have discovered a favourable point to insert their rostrum, they lose their legs in a first moult, and if they are females they become motionless until the end of their life-cycle. The males on the contrary, whether winged or wingless, leave their scale within a few weeks and mate, but die soon afterwards. The females, when once they have been fertilised, become gradually mature and then commence oviposition, which weakens them gradually until death ensues. The resin is formed between the time of fertilisation and that of oviposition ; during this time the female projects out of her resinous coating white waxy filaments which give the colony a white downy appearance denoting its good state of health. According to MAXWELL, the wild jujube tree is particularly adapted for this type of rearing ; a plant in good condition and well inoculated should yield about 22 lbs. of lac.

These insects usually have two generations in India. They are said nevertheless to have three generations in the province of Madras, Mysore and Burmah. MR. STEBBING, zoologist to the forestry department of India, advises the establishment of special plantations of the species on which the insect lives best, and he adds that the colonies ready to swarm should only be taken from trees of the species on which it is intended to settle the insect, or in any case the colonies should have lived on harder species than those on which it is proposed to settle them. The branches bearing the future swarm must be cut so that the larvae do not swarm during transport and the sap in the branches themselves does not dry up, which would cause the death of the females before the maturity of the eggs.

Comparative data are supplied with regard to the production in Indochina and India. The stick lac of India is more friable than that of

Indochina. Generally, Indian lac fetches better prices than Indo-chinese, although the latter is in turn well quoted on the market, and regarded for instance as superior to that of Siam. It is particularly appreciated owing to its purity and the absence of any resin.

For the production and collection of the lac, it is pointed out that the natives have always seemed astonished to hear of crops being obtained from the forest ; they assume that its production can only be obtained on plants specially cultivated for the purpose. Nevertheless, lac of Indian origin is often described as forest produce. No data are available to clear up this question. With regard to the cultivated plants, some of them are able to supply two crops per year for two or three consecutive years even, but generally a rest period of one year, or at least of one crop or two, is required.

The memorandum next supplies information with regard to the geographical range of *Tachardia* and the experiments carried on to extend its production. It is interesting to note that the most suitable spots for production should not be either too hot or too cold, the rainfall amounting to 29.25 inches per annum, humidity should not be wanting but must not be excessive ; dry and arid tracts must be rejected. The observations made in Indochina give from 1310 to 2130 feet as the limits of altitude. A temperate climate and places sheltered from the wind, but airy and hilly, seem the best.

The writer has collected the data supplied by the experiments made for spreading the insect in Indo-China and he describes the means employed in Indo-China and India for purifying lac. Summarising afterwards the results of his researches and excursions, he records that production in Indo-China is carried on in three regions only : those of Sonla, Song-Ma and Nam-Hon. He recalls the fact that the production of lac requires thorough aeration and the presence of a species of big light red ant, which according to the natives is to be credited with combating all other ants injurious to rearing, the latter being easily recognised as they are black and small. Finally, there is published a scheme of research intended to complete the geographical distribution of producing areas, to specify more clearly the nature and distribution of the most useful species, to study the different kinds of lac produced and the reasons why some lots are insoluble in alcohol, and to extend the cultivation of *Schleichera trijuga*, which is also useful owing to its edible kernel rich in oil, but which is above all recommended for the production of the lac known in trade as " Fine Orange ".

According to the writer the researches should also extend to the entomological study of *Tachardia*, the economic conditions of its rearing, the trade and exchange of eggs, the study of the ant regarded as useful and the conditions and requirements of the various markets.

Finally, the report comprises two plants representing the plant and appliances required for the refining of gum lac.

# FARM ENGINEERING

AGRICULTURAL MACHINERY AND IMPLEMENTS

896 – **Electric Tillage in the Province of Piacenza, Italy.** — *L'Italia Agricola*, 53rd Year, No. 3, pp. 120-121, Piacenza, March 15, 1916.

In the province of Piacenza, tillage by electricity supplied by cable has been carried on for about 3 years over enormous tracts of land, and the work thus executed in 1915 has proved that the problem of this tillage is on the way to being finally solved.

The machinery employed for this work by the BRIOSCHI Electrical Undertakings Company yielded satisfactory results everywhere, both in regard to the depth and the regularity of ploughing.

With 2 plough shares working a strip 26.5 inches wide to a depth of 13.8 inches at an average speed of 47.3 inches per second, the machine ploughs 10.76 sq. ft. per second, allowing for stoppages at the headlands, its normal output may amount to 7.41 acres per day of about 11 hours' work.

The winch is actuated by an 80 H. P. electric motor, the usual consumption being only 60 to 70 H. P. Being fed direct by the feed mains with 3600 volts, it can be placed at any point of the system. The feed current is transmitted to it by a flexible cable coved with a metal tube, which follows the winch in its forward movement. Owing to special terminals the current can be switched on or switched off at any moment when the mains are under load. The staff required does not exceed 3 men : one at the winch one at the plough, and one at the transmission carriage by which the reciprocating movement of the plough is produced, these three parts of the machine being kept in alignment so as to facilitate supervision and checking of the work.

897 – **Mechanical Tillage Experiments with Tractors at York, England, in 1915.** — GILCHRIST J., in *The University of Leeds and The Yorkshire Council for Agricultural Education*, No. 100, *Report on Demonstrations with Motor Tractors at York*, 1915, 24 pp., 4 tables + 8 plates. Leeds, 1916.

In agreement with the University of Leeds and the Yorkshire Agricultural Education Committee, the Yorkshire Agricultural Society had demonstrations of tractors and cultivation machines carried out in November 1915, near York. The data combined in the appended Table are taken from the detailed Report of these trials.

*Principal Results of Trials.*

| Motor tried | Maker | Power | Price | Uses | Fuel burnt | Area ploughed in 10 hours |
|---|---|---|---|---|---|---|
| Fowler motor plough. | J. FOWLER & Co., Leeds. | 10 HP | £ 159 | Will draw any cultivator. Can drive small stationary machines but not big threshers. Will not do rope haulage. | Petrol 12.5 gallons Can also use benzol and may be adapted for using paraffin. | 2.49 acres |
| Universal Tractor. 20 BHP. | SAUNDERSON & MILLS, Bedford. | 20 BHP | £ 327 | Will draw any cultivation machine; 3 reapers or 2 reapers and binders. Will drive stationary machines including large threshers. Will haul up to 5 tons on road. | Paraffin with 9 % of petrol, 8.3 gallons | 9 acres |
| Mogul Tractor 16. HP | INTERNATIONAL HARVESTER Co., London. | 16 HP | £ 274 | Will draw 2 reapers and binders. Will drive any stationary machine. Will haul up to 5 $^1/_2$ tons on road. | Paraffin 8.7 gallons * | 6 acres |
| Mogul Tractor 25. HP | Do. | 25 HP | £ 435 | Will execute all work including road haulage. | Petrol 5 gallons | 10 acres |
| Overtime Tractor. . | THE OVERTIME FARM TRACTOR Co. Ltd., London. | 24 HP | £ 233 | Will execute all work except ordinary road haulage. | Paraffin 5 gallons | 6.24 to 6 ac. according to the compactness of the soil |
| Sandusky Tractor 40/45 HP. | MILLS & SONS, London | 38 BHP | £ 582 | Will execute all heavy work, including road haulage. | Benzine ** | ** |
| Daimler Tractor . . | THE DAIMLER Co. Ltd., London. | 40 HP | £ 605 | Will execute all work, including road haulage. | Petrol 6.2 gallons | 8.5 acres |
| Mann Steam Tractor 22B HP | MANN'S PATENT STEAM CART AND WAGON Co. Ltd., Leeds. | 22 HP | £ 469 | Do. | Coal 2.5 cwt | 8.5 acres |

* Estimated quantity. — ** It was not possible to obtain these data during the experiments. The makers indicate a consumption of 2 gallons of petrol per acre.

**818 - Portable "Vasino" Cereal Drier.** — TARCHETTI A., in *Il Giornale di Risicoltura*, VIth Year, No. 7, pp. 121-124, 2 fig. Vercelli, April 15, 1910.

This drier, mounted on wheels, and designed by MESSRS. VASINO BROTHERS, at Ponzana (province of Novara, Italy), is on the *tipping plane* system, (like the types CATTANEO GEMINARDI & GUIDETTI ALBERTINI) BOLTRI, etc.). The appended figure shows the arrangement of its essential parts.

The case shaped like a parallelopiped, is divided into superposed compartments by a series of horizontal aprons (g) made up of strips of metal gauze or perforated tin plate, each of which turns on its horizontal axis, tipping and thus emptying the grain to be dried on the apron immediately beneath. Each shaft has an end which is prolonged outside the case and is fitted with a fork lever through which an endless metal cable passes; this cable can run horizontally in a parallel direction to each of the successive aprons, while rising rigzag from one floor to the other, owing to 2 opposite sets of grooved pulleys which are fitted alternately at one end of each floor; it is fitted with an excentric cam which is unable to pass through the fork and therefore compels each lever in succession to shift and to tip the corresponding strip of the apron; then, as soon as the fork is released from the the excentric, it is returned to its position by a spring or counterweight fitted to each lever.

Of course the tipping movement of the strips making up the apron, produced in this way by the cable movement, is intermittent. It is made to recur at lesser or greater intervals (generally from 10 to 20 minutes) according to the degree of dryness required in the grain. The stopping and starting of the cable are controlled by a special device placed in front of the machine at *O* and *E*.

The hot air used for drying is supplied by the stove *B* placed behind the car; it is drawn up from below by the aid of 2 large fans *C* fitted to the side walls of the stove, and is injected into the case through a set of nozzles *m* - *m'* - *m''* - *m'''*, the flow being regulated by the dampers *s* - *s'* - *s''* - *s'''*.

This injection of hot air does not take place into each compartment but only in one out of two, so that between each pair of compartments thus ventilated there is one which the hot air is compelled to enter after passing through the layers of grain on the upper and lower aprons, afterwards emerging from the case through the front apertures *n* - *n'* - *n''* - *n'''* or the side apertures *p* - *p'* - *p''* - *p'''*, provided in the walls.

Two suction arrangements *D* accelerate the air current at will. On the other hand the pipe *x*, fitted with a damper, brings the lower compartment into communication with the air inlet from the stove. By operating the damper *x* and the dampers *t* - *t'* - *t''* provided in the pipe of the suction devices, therefore, the hot air more or less saturated with moisture emerging from the case can be utilised wholly or in part.

The grain to be dried is inserted in the apparatus every 10 or 20 minutes, and spread in a uniform layer of 3 to 4 $^3/_4$ inches thickness on the upper apron, from which it descends, passing successively through the others to the lower apron, and on reaching the latter is deprived of its moisture.

From this lower apron the dry grain is discharged automatically onto the ground, after being gradually recooled by means of the cold air drawn in from without through the suction fan *D* or the tube *x*.

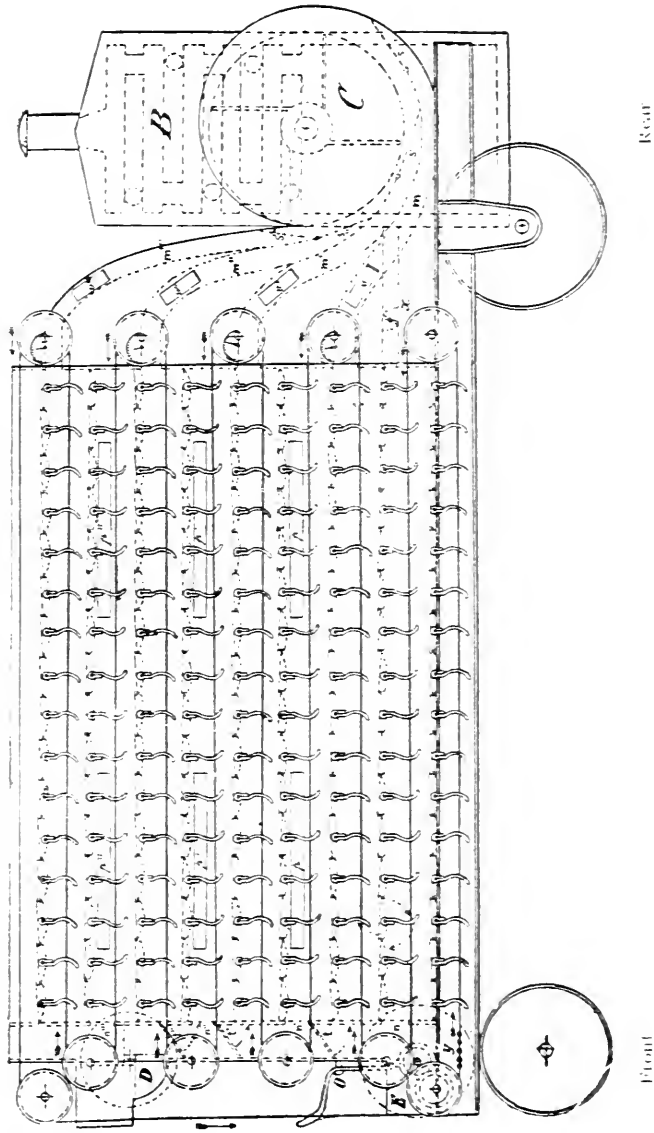


Vasino Grain Drier - Longitudinal Section

The advantages possessed by the Vasino drier may be summed up as follows:

1) Machine occupying very little floor space, the portable type with 9 aprons examined by the writer weighed. 1102 lbs. and measured : length 18 ft., width 8 $^1/_4$ ft., height 10 ft.

2) Simplicity and reliability of the apron tipping mechanism.

3) Great facility in altering the path and temperature of the air used for drying, according to the kind of grain to be dried.

4) Possibility of carrying out very energetic drying by always passing dry air through.

5) High efficiency.

6) Limited fuel and power consumption (hardly more than 1 HP).

7) Little labour required : 1 workman to feed the machine and 1 to look after the discharge.

The output of this drier of course depends upon the degree of dryness required. The makers assume that in order to dry paddy which is not over-wet it will suffice to pass it through the machine twice for 15 minutes at a time, and under these circumstances they estimate the continuous daily output (12 hours) at about 177.12 cwt. of dry paddy.

899 – **Machine for Gathering Cotton Fruits without Injury to the Plant.** — *Scientific American*, Vol. 114, No. 22, pp. 551 and 564, 3 fig. New York, May 27, 1916.

A light machine (990 lbs.) in the shape of a 2 wheeled cart with broad tires, the mechanism for gathering the ripe fruits of the cotton plant being located between the wheels.

It is drawn by 2 horses straight over the rows, so that the working parts detach the fruits of the plant and deliver them into a wooden box at the rear of the cart.

The cropping mechanism comprises 100 fixed arms (one of which is shown separately at the top of the annexed illustration), each carrying a number of revolving points, which gather the ripe bolls. These arms, directed backwards and thus working in an opposite direction to that of the cart, are fixed on gutter-shaped metallic supports (hollow laths), within which revolves a shaft which, by means of gearings, transmits to the points the rotatory movement which it receives itself by means of an endless chain driven from the wheels of the moving cart.

The arm supports, which can themselves revolve on their shaft and move backward when the cart is going forward (again by means of the endless chain), are arranged in 2 symmetrical groups separated in the middle by a space for the plants which are being cropped. In proportion as the machine advances above a row, the arms, by means of their revolving points, pick almost all the *ripe* bolls of a plant at once, without injuring the plant (because the arms remain stationary with the plant while the entire vehicle continues to move) and leaving the unripe fruits for a subsequent crop. On completion of this crop the plant is left behind the machine and the arms, owing to rotation of their supports, drop down on each side of the apparatus towards the wheels, still holding the detached bolls. The direction of rotation of the points is then automatically reversed ; they release the bolls, which fall to the bottom of the elevator and are fed by it into the box at the back, where the cycle of operations in relation to *one* plant terminates.

This cycle begins afresh for the following plant, first by bending down the arms towards the free space in the middle, enabling them to gather the bolls

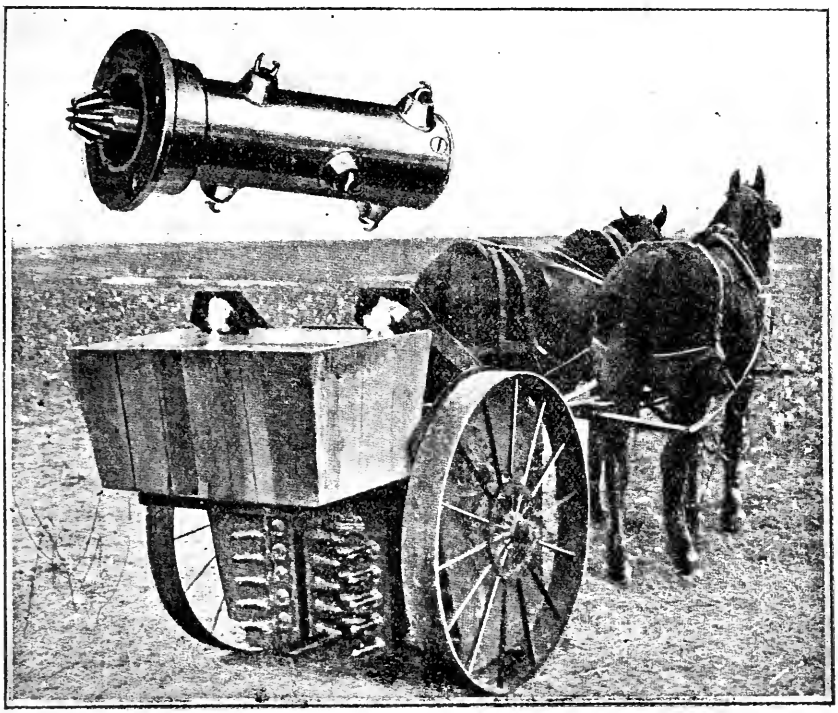

Machine for gathering cotton fruits without injury to the plants

and continuing and finishing afterwards as described above, the same process being repeated for all the plants in one row.

900 — **Milk Can Emptying Machine.** — *The Implement and Machinery Review*, Vol. 42, No. 495, p. 312. London, July 1, 1916.

By the aid of this contrivance, built by the firm of S. WILKERSON, Bassingbourne (Cambridgeshire, England), and which is used to empty the milk from one can into another or from a can into a tank, a boy can do as much work as 2 labourers without any fatigue as he only requires to turn the crank ; in addition the losses of milk which usually occur in emptying by hand are avoided.

The apparatus may be built for any height ; it has folding legs to facil-

itate transport, and can also be easily converted into an ordinary sack hoist.

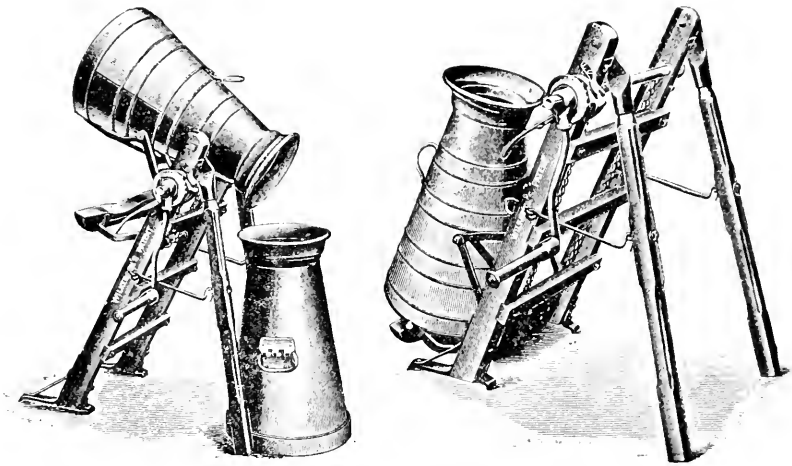

WILKERSON Milk can emptying machine.

901 – **Review of Patents.**

*Tillage machines and implements.*

| | | |
|---|---|---|
| Austria | 71 833. | Cultivator. |
| British India | 2 089. | Improved plough attachment. |
| Germany | 283 708. | Harrow consisting of two parts connected by a joint. |
| | 283 863. | Ditching machine. |
| | 284 228. | Arrangement for ploughing with portable engine. |
| | 284 414. | Motor plough with beam moving in a vertical plane. |
| | 284 494. | Cultivator with twisted spring teeth and obliquely placed disks. |
| | 284 495. | Device for preventing fouling of the bars bearing the shares in gang ploughs. |
| | 284 496. | Soil divider for furrowing ploughs. |
| | 284 553. | Ditching plough. |
| | 284 712. | Hoe with adjustable blade. |
| | 284 713. | Plough with couch grass lifter. |
| | 284 963. | Balance plough. |
| | 285 007. | Machine for cutting irrigation ditches in meadows. |
| | 285 086. | Motor plough with frame that can be raised or lowered. |
| | 285 166. | Guiding apparatus for agricultural machines, especially for motor ploughs. |
| | 285 412. | Shovel wheel for motor ploughs the shovels of which have a digging and throwing motion. |
| | 285 618. | Motor plough with automatic starter. |
| | 285 720. | Machine for bringing sub-soil to the surface. |
| | 285 749. | Plough cable with electrical conductor core. |
| | 285 843. | Brake for cable ploughs with electrical drive for return. |
| Italy | 151 960. | Improvements in common ploughs drawn by animals. |

| | | |
|---|---|---|
| Spain | 61 892. | Plough. |
| Switzerland | 72 705. | Turn-wrest plough with adjustable draught device. |
| United Kingdom | 1 581. | Means for propelling ploughs, cultivators etc. |
| United States | 1 181 106 — 1 181 394 — 1 183 828. | Harrows. |
| | 1 181 287. | Wing harrow. |
| | 1 181 345 — 1 183 138. | Ploughs. |
| | 1 181 353 — 1 182 340 — 1 183 482. | Cultivators. |
| | 1 181 480. | Attachment for ploughs. |
| | 1 182 154. | Multiple section stalk cutter. |
| | 1 182 304. | Corn harrow. |
| | 1 182 826. | Combined hoe and seed planter. |
| | 1 182 910. | Coupling for a tractor and plough. |
| | 1 183 465. | Traction plough. |
| | 1 183 686. | Reversible side hill plough. |
| | 1 183 723. | Cotton cultivator and chopper. |
| | 1 183 783. | Lister plough. |

*Manure distributors.*

| | | |
|---|---|---|
| Austria | 71 580. | Manure distributor. |
| Germany | 284 029. | Fertilizer distributor especially for cyanamide. |
| | 284 364. | Manure spreading device. |
| | 284 449. | Fertilizer distributor in which artificials are blown out from a series of nozzles close to the ground. |
| | 285 087. | Machine for comminuting and spreading farmyard manure. |
| United Kingdom | 2 893. | Manure distributor. |

*Drills and sowing machines.*

| | | |
|---|---|---|
| | 283 680. | Device for ploughs of potato planters. |
| | 284 030. | Device for adjusting the openings of seed holes in agitator seeders |
| | 284 384. | Drill feeder with adjustable bottom. |
| | 284 385. | Sowing machine with distributing wheels in the seed hopper. |
| | 285 679. | Potato planter. |
| | 286 251. | Elevator for potato planter. |
| Switzerland | 72 706. | Sowing machine. |
| United States | 1 181 436. | Corn planter attachment. |
| | 1 181 539 — 1 181 930. | Seed drill. |
| | 1 183 346. | Corn planter. |

*Reapers, mowers and other harvesting machines.*

| | | |
|---|---|---|
| Austria | 71 840. | Knife for mowers. |
| Germany | 285 062. | Device for lifting the knife of mowers into a vertical position. |
| | 285 167. | Horse-rake in which the rake can be lifted by gearing on the wheels. |
| | 285 238. | Knife for mowers. |
| | 285 292. | Horse-rake. |
| | 285 825. | Swath rake convertible into a tedder. |
| United Kingdom | 2 585. | Hay-cocking machine. |
| | 2 667. | Apparatus for stacking hay, straw, etc |
| | 3 081. | Hay making machine. |
| United States | 1 182 119. | Hay unloading apparatus. |
| | 1 182 846. | Grain shocker. |

1 182 899. Mowing machine.
1 183 065. Two row corn-cutter.
1 183 092. Traction binder or header.
1 183 768. Corn cutting machine.

*Machines for lifting root crops.*

71 479. Potato lifting machine.
Denmark. 21 166. Potato lifting machine.
21 218. Device for potato lifting machine.
Germany 283 866. Beet topping machine with one knife.
283 867 — 284 242. Riddling and delivery of potatoes in potato harvesting machines.
284 229. Potato fork with interconnected tines.
284 651. Throw wheel with collapsible spring tines for potato harvesters.
285 510. Tine wheel for discharge of stems and leaves from potato harvesters.
285 511. Beet harvester with forks, which pull the roots almost vertically out of the soil.
286 140. Forks for lifting potatoes and the like.
286 141. Potato harvester with throw wheel revolving in the same direction as the machine proceeds and delivering the potatoes sideways.
286 158. Potato harvester with a seat behind the shares for a person to pick out the stems and leaves.
286 230. Potato harvester with share, oscillating screen and riddle drum.
United States 1 181 768. Potato harvester.
1 182 149. Beet pulling and topping machine.

*Threshing and winnowing machines.*

Austria 71 834. Threshing machine in which the sheaves are fed sideways.
France 479 762. Threshing machine for cereals and forage seeds.
Germany 284 031. Wheat cleaner and grader with shaking endless grading band.
284 033. Straw shaker, the inclination of which can be adjusted, for thrashing machines.
284 388. Winnowing machine with automatic regulation of the current of air.
284 389. Drum for winnowing machine.
285 413. Device for cleaning cereals, especially wheat.
Italy 151 400. Automatic sheaf feeder for threshing machines.
Spain 61 995. Apparatus for continuous feeding of threshing machines from the ground.
United States 1 181 360 — 1 181 373. Grain saving device for threshing machines.
1 183 156. Separator or grader.

*Machines and implements for the preparation and storage of grain, fodder, etc.*

Germany 284 008. Wire guide with clamp for straw presses and the like.
284 386. Device for hoisting the bundles of straw turned out by straw binder.
285 206. Machine for separating hairy weed seeds.
286 159. Potato sorting machine.
United States 1 181 497. Hay press.

1 182 144. Potato separator.
1 182 436. Wagon hay stacker.
1 182 718. Self feeding and self tying mechanism for hay presses.

*Dairying machines and implements.*

Austria
71 338. Separator for milk and the like.
71 330. Combined milk sieve and cooler.

Germany
283 840. Supply-can for milk separators.
284 243. Holder for the tails of cows, while milking.
284 365. Churn revolving round a vertical axis.
284 366. Centrifugal friction-coupling for milk separators.
284 367. Device for the automatic closing of the suction pipe from the teat cups in milking machines.
284 640. Milk separator with plates.
285 009. Valve for interrupting the suction in the teat-cups of a milking machine when the flow of milk ceases.
285 010. Elastic sides for teat-cups with varying thickness along their length and with reinforced bottom provided with an opening.
285 168. Butter machine with rotating churn and an obliquely mounted beater.

*Other agricultural machines and implements.*

British India
2 253. Improvement in and relating to manufacture of paper making pulp from esparto and the like.

Germany
283 748. Vermin trap with hoop for net.
283 865. Tractor for ploughs with steering wheel in front of driving wheel
283 904. Apparatus for feeding sucking-pigs.
284 005. Trap for rats, mice and other animals.
284 130. Beet slicer.
284 342. Cable drive for the road wheels of agricultural machines
284 450 — 285 063. Chaff cutters.
284 493. Agricultural tractor with two driving wheels each driven by an electric motor and with a generator of electricity driven by an internal combustion machine or the like.
284 497. Device for killing injurious animals.
284 599. Device on agricultural machines for carrying the reins of the draught animals.
284 711. Agricultural motor.
284 951. Wild mustard weeder.
284 984. Crank driven machine for felling trees and cutting timber by means of a wire heated by friction.
285 008. Cable with electrical conductor core.
285 166. Steering device for agricultural machines especially motor ploughs.
285 263. Ventilating device for clamps.
285 264. Chaff cutter with endless chain feeder.
285 329. Agricultural motor that can be used as motor car.
285 471. Three-wheeled agricultural motor.
285 512. Apparatus for sharpening scythes by pressure and traction.
285 513. Machine for making ribbon shaped fly-catchers.
285 783. Device for watering trees.
285 807. Watering can.

| | |
|---|---|
| | 285 821. Sieve with alternate conical depressions on each side. |
| | 285 890. Horse feeding apparatus. |
| | 286 003. Automatic feeding apparatus especially for pigs. |
| | 286 035. Clockwork device to scare birds by shooting. |
| | 286 070. Device for controlling vermin, especially earth-fleas. |
| Spain . . . . . | 61 992. Olive crusher. |
| United Kingdom | 1 721. Machine for extracting essential oil from limes and oranges |
| | 1 844. Appliance for protecting growing strawberries. |
| | 2 117. Sugar cane mills. |
| | 2 955. Collapsible cloche for horticultural purposes. |
| | 2 971. Apparatus for cutting and slicing vegetables. |
| United States | 1 181 255. Alfalfa mill. |
| | 1 182 104 — 1 182 883 — 1 183 123. Tractors. |
| | 1 183 381. Traction engine. |
| | 1 183 669. Caterpillar tractor. |

FARM BUILDINGS.

902 – **New Method of Fireproofing Wood** (1). — *Engineering Record*, Vol. 72, No. 24, p. 717. New York, December 11, 1915.

This method of fireproofing shingles was tested in the Forests Products Laboratory at Madison (Wisconsin, United States). It is based on the formation of an insoluble salt, borate of zinc, which melts at a high temperature and covers the fibres of the wood with a protective coating.

The air-dried shingles are first impregnated with a watery solution of borax, then stove-dried until their percentage of moisture does not exceed 10 per cent. After this they are impregnated with a solution of zinc chloride, once more dried in the stove, and are then ready for use.

The two solutions must be applied under high pressure, which necessitates the use of strong plate reservoirs, pressure pumps, standardised recipients and other comparatively expensive contrivances. Consequently this process can hardly be used to advantage except where large quantities of wood are to be treated.

The experiments have shown that the shingles treated by this process and immersed in running water for two weeks had not lost their fire proof properties thanks to the insolubility of the zinc borate

When exposed to a fierce fire the shingles treated burn, it is true, but without flame, which is an important quality, because it prevents the fire spreading from one part of the roof to another by the falling sparks or burning brands.

903 – **Fencing-poles with Rot-proof Feet.** — PLUMLEY G. L., in *American Agriculturist*, Vol. 96, No. 22, p. 6. New York, November 27, 1915.

By the following comparatively inexpensive method, fencing poles may be provided with a rot-preventing cement foot.

Along each pole from 1 to 2 angle irons are fixed which project outward from the pole by an amount equal to the length of the foot to be fixed in the ground ; this free end is placed vertically in the middle of a varnished terra-cotta drain (or 2 superposed drains), after which the empty space is

(1) See *B.* 1914, No. 462. (*Ed.*)

filled with Portland cement mortar ; when setting is completed, the poles are ready to be fitted up.

Poles of this kind can last an indefinite time, especially if the precaution is taken to paint them afresh every year. When the wood begins to rot, it can easily be detached from the foot and replaced.

904 – **Device for protecting Sucking-Pigs.** — DESSAISAIX R., in *Journal d'Agriculture pratique*, 80th Year, 1916, No. 12, pp. 216-217, 2 fig. Paris, June 15, 1916.

Various arrangements have been contrived to prevent sows from overlaying their young when lying down along the wall of the sty. Among these contrivances the following, applied in various piggeries in Switzerland, may be pointed out : along the walls of the sty, a series of irons *f* are placed, at about 20 inches distance from each other. Fig. 2 is a detail view of one of

*Arrangement for protecting Sucking Pigs.*

Fig. 1

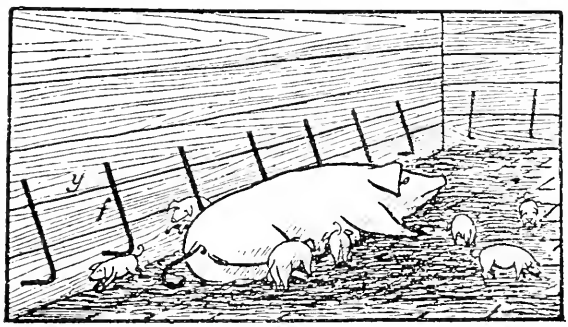


Fig 2

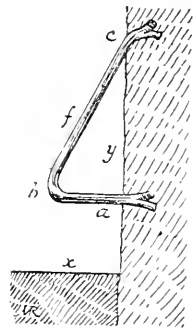


these irons, *f* the lower limb *a* of which is at 6 or 7 inches above the ground *x* of the sty ; this height can be altered according to the size of the sow, the point *b* being always about level with the teats. The rounded projection *b* is about 6 or 7 inches in front of the wall *y* and the upper point *c* may be nearly 16 inches above the limit *a*. The round irons *f* 0.6 to 0.8 inches in diameter, have their ends run into the brick wall ; if the wall is made of wood they may end in a claw so as to fix them by means of screw rings.

The arrangement under examination provides the young pigs with a passage either below or above the limb *a*.

## RURAL ECONOMICS.

905 – **Discussion as to the Method of Effecting Valuations.** — ALBANI GIUSEPPE., in *Il Monitore Tecnico*, XXIInd Year, No. 7, pp. 97-100; No. 8, pp. 117-120. Milan, March 10 and 20, 1916.

An examination of the fundamental principles which prove the utility of the analytic method in valuation, and determine the limits of accuracy between which theories of valuation may be accepted in practice.

Valuation considers real estate as wealth in the strict sense of the word (static aspect) or as capital, that is to say, wealth tending to reproduce wealth (dynamic aspect).

Valuation can only estimate the value of real estate at a given economic moment, because the unit of measurement, currency, changes in value, *i. e.* in potentiality of exchange, in the course of time.

One of the practical fields for the application of the science of valuation is the market, where real estate wealth is exchanged for currency wealth which takes the name of price; but according to the writer, the field of action of the market has different limits from those of valuation, because all properties which cannot be alienated and for which a value but not a price might be fixed are outside the market limits. Moreover, on the market, where the exchange of real estate is actually carried out, the status of the contracting parties has a great influence upon the particular market value in this case, while valuation, which is impersonal, does not allow for these influences. In practice, a valuation is often required for the purpose of estimating the selling value, thus compelling the valuer to base his judgment on that likely to be given by the market.

Market and valuation only deal with real estate considered as capital, and can therefore only be estimated by capitalisation either directly or indirectly of the revenues and material advantages which it produces.

At any given moment, in each locality, the value of all the real estates furnishing equal revenues will be equal (provided of course that all forms of positive and negative revenue are calculated). In view of the difficulty of valuing immaterial revenues, it is customary in practice to divide the revenues of real estate into material and immaterial revenues; the corresponding rate of interest is also divided into 2 parts, one being ascribed to the material and the other to the immaterial revenues. Then, only the material revenues are capitalised in proportion to their share of the rate of interest which, owing to this fact, will be greater or less than the current rate, according as the positive or negative revenues predominate in the immaterial revenues; the resulting capital value is considered as the value of the whole real estate.

To determine the value of real estate it is necessary to estimate: 1) the amount in currency of its material revenues and that of the share of immaterial revenues which can be valued; 2) the rate of interest according to which this amount is to be capitalised. According to the methods that can be employed in determining these data, a decision as to the value of the analytic method of valuation, can be made.

The writer divides valuations, according to their purposes, in 3 principal categories, in Table I :

TABLE I. — *Categories of Valuation.*

- Valuations having for their final object the determination of
  - Revenue
    - Valuations for purposes of taxation ;
    - » for usufruct or life interest.
  - capital as a source of
    - Temporary Revenue
      - Valuations for mortgage security ;
      - » for compensation for damage caused by hail, etc. ;
      - » of damage resulting from military action ;
      - » in respect of temporary occupation ;
      - » of indemnity for bad management of properties rented.
    - Perpetual Revenue
      - Valuations for expropriation ;
      - » of improvements or damage caused by neglect ;
      - » of servitudes ;
      - » for change of value due to the opening of new public roads or the establishment of new means of communication.
  - capital independent of revenue
    - Valuations of indemnity for fire, earthquake, etc. ;
    - Treasury valuations for ascertaining value for succession or death duties, etc. ;
    - Valuations for guarantee of dowry, trust properties, etc. ;
    - Valuations for changes in value of lands due to regulations for their improvement.

According to the economic nature of the real properties to be valued (buildings, building and farm lands, quarries, mines, etc.), the categories of Table II are drawn up.

TABLE II. — *Categories of Valuations according to the economic nature of the property.*

- Real property yielding revenue
  - directly
    - material
      - in cash
        - real property let at a fair price payable in cash ;
      - in produce
        - real property let at a fair price payable in kind ;
        - real property managed or worked by the owner ;
        - buildings to be demolished for utilisation of the building material ;
    - immaterial
      - buildings and lands required for social or public purposes for road construction, religious purposes etc. ; sterile fields, properties yelding no revenue and incapable of yielding any ;
    - mixed
      - with dynamic function
        - real properties with improvable revenue ;
      - with static function
        - houses serving for purposes of pleasure.
  - indirectly
    - buildings and lands needed for the exercise of an industry ;
    - building lands.

The writer examines the categories contained in Table II and points out that none of them can escape the necessity of analysis in order to determine the capitalisable income it is capable of yielding ; he arrives at the same conclusions on considering the valuations according to the object they have in view. The difficulties of economic analyses are of 3 kinds, according to the amount of revenues which the real property can produce, the price by which its value may be expressed in currency, and finally the time to which these revenues and their valuations relate.

From an examination of these difficulties and the method which valuation suggests for overcoming them, the writer concludes that the valuation can only, quite conscientiously, draw up approximate judgments, and the valuer can only indicate the maximum and minimum limits within which are contained not only the value asked of him, but also all the values which each of the persons called upon to give their opinion may attribute to the real property in question. If he has to decide in favour of a single value, the valuer will within these limits look for the normal average value, the determination of which for one real property always gains by being the result rather of an analytic valuation than of a market valuation ; because, while the market value is made up of 2 parts which each contribute their personal tendencies to the exclusion of all others, the expert according to the rules of valuation divests himself of his own personality in order to assume a personality summing up the tendencies of the others.

Examining next the other methods of valuation termed *indirect*, *direct empirical*, *statistical* and *mixed methods*, the writer observes that they all take their rise more or less remotely from economic analysis, and with regard to the analytic method he draws the following conclusions :

In view of the fact that the value of real property depends on the total revenues obtained from it and the rate of interest at which they are capitalised, and that this value cannot be determined otherwise than by means of these two factors, it is absolutely necessary, after reviewing all the cases which occur in valuation, to conclude that each of these must be analysed in order to ascertain either the amount of the revenue or the rate of the material and immaterial revenues which can be derived from each real property and consequently the rate to be applied for capitalisation. As in these determinations there may be differences of valuation, the estimate must allow for extreme valuations; its conclusions must therefore usually be expressed within maxima and minima, between which the entire series of valuations of different persons may fluctuate, and it must, in order to reach these conclusions use the methods which the science of valuation shows to be sanctioned and accepted as accurate in practice. If the valuation is required to give a single precise value, it must select the latter within the scale lying between the two extreme values, either taking into account the particular conditions and the purposes of this special problem, or by calling to its aid all the subsidiary criteria which experience and practice may suggest, in order to find the standard of valuation which the majority of persons would apply in this particular case and for this particular object. In these cases the valuation must never be considered as containing an ab-

solute and unassailable judgment. Under these circumstances the valuation can test the accuracy of its judgments by comparing its own estimate with other similar valuations in like cases, but it must do this carefully, given the extreme difficulty of establishing a perfect comparison between different cases.

Valuation should not resort to other methods than the analytic except for rough estimates, and should always maintain some doubt as to the accuracy of the results if they are not corroborated by a thorough examination, the direct consequence of which is to lead to an analysis. If it be borne in mind that analysis is, and should always be, the means by which the results are obtained or checked in the course of time, it may be doubted whether there really exist any other methods of valuation than the analytic method.

906 – **Cost of Production of the Principal Cereals in European Russia.** — KOTELNIKOV V., in *Сельское Хозяйство и Лѣсоводство, журналъ Министерства Земледѣлія* (*Agriculture and Sylviculture*, review published by the Ministry of Agriculture). Vol. CCL, Year LXXVI, pp. 451-459. Petrograd, March 1915.

The section of Rural Economy and Agricultural Statistics of the Ministry of Agriculture recently published the results of an enquiry into the cost of production of the principal cereals in European Russia, namely, winter rye, oats, spring wheat, winter wheat and barley, and the profit furnished by each of these crops. The investigation is based on the replies given by farmers who are correspondents of the Section, and some institutions and persons interested in agriculture, to a list of questions addressed to them. The number of replies was 5 169, of which 3 737 related to peasant farms and 1 442 to those of large landowners.

The material collected in this way contains data concerning winter rye and oats in 60 governments, barley in 52, spring wheat in 47 and winter wheat in 47 governments. The governments of the kingdom of Poland are excluded from the enquiry. The data are grouped according to the governments and principal agricultural regions. The publication dealt with by the writer will be followed by two others, one of which will contain monographs and analytical data regarding individual farms, and the other the special local enquiries to be carried out by some zemstvos, with the financial assistance of the Section, in governments more or less typical for each of the different regions.

The data collected are digested similarly to the cereals under study; they are regrouped for the governments according to the area of the farms. The first group contains farms with an area up to 154 acres; the second, farms with between 54 and 135 acres; the third those from 135 to 540; the fourth, those from 540 to 1350 and the fifth, those of 1350 acres and upwards. Three averages are made: one for farms up to 135 acres, another for those with more than 135 acres and the third for all the farms in the government.

Without dwelling on the details of treatment of the statistical data collected, we pass on to the data relating to the great agricultural regions of Russia, which data have been combined by the writer in a somewhat different way as compared with the publication of the Section, inasmuch as in determin-

ing the percentage of each of the elements of the cost of production there has also been taken into account the cost of renting of the soil, in view of the great importance of this factor in production. The table modified in this way is reproduced here. It contains the total of all the expenses of cultivation for each cereal. This total comprises: 1) the expenses for all the labour connected with production, tillage of the soil, sowing, after management, crop, carting away from the field, threshing and cleaning the grain; 2) the cost of the grain required for sowing; 3) the cost of the manure,including the expenses of its carriage; 4) general expenses, and 5) the cost of renting of the soil. In addition, the table also indicates the cost of production of one bushel of each cereal; this cost also comprises the rent of the ground. In order, however, to determine this cost price, the value of the straw was deducted from the total expenses of production, that is to say, the cost of production of the grain alone is given, which, according to the writer, corresponds better to the actual conditions of agricultural economic life. Finally, in the table there is shown the percentage of each class of expenses relatively to the total of such expenses.

On comparing the particulars of the table, it is seen that the principal cereals grown in Russia arranged according to the cost of production fall into the following order: 1) winter wheat, 4*s.* 10 *d.* per cwt; 2) spring wheat, 4 *s.* 7 *d.*; 3) winter rye, 4 *s.* 6 *d.*; 4) barley 3 *s.* 5 *d.* and 5) oats 3 *s.* 6 *d.* The writer attributes great value to the figures collected inasmuch as they allow of ascertaining the value of each of the elements of production and the relations between these elements for each cereal and for each of the regions and governments; consequently some comparisons are made.

*Winter Rye.* — The cost of production of winter rye is higher outside the zone of "tchernoziom" that in that zone, both in respect of expenses per acre (£ 2.15.2 against £ 2.6.3) and in the cost of one cwt. of grain produced (4 *s.* 9 *d.* against 4 *s.* 4 *d.*). Thus between the different regions of these two zones very great fluctuations are seen. The importance of each of the elements of rye production presents itself as follows: the highest value is that of the labour expenses; on the average throughout all European Russia they represent more than one third of all the expenses of production of cereals; in the "tchernoziom" zone the amount of labour expenses is greater than outside this zone. The two other classes of expenses — soil rent and manure — in European Russia are about the same in amount, each representing $^1/_5$ of the total expenses (20.6 and 20 %); but in the tchernoziom zone, the soil rent is the greater while in the other zone it is the manure. The sum of these two expenses gives similar values both for the tchernoziom zone and for the other, namely 39.3 % in the former case and 41.7 % in the latter. The total of these expenses is said to determine the cost of production of the rye. The next class of expenses is represented for the non-tchernoziom zone by sowing expenses, and for the tchernoziom zone by general expenses; this difference is explained by the higher cost of production of the cereals, and consequently of seeds, and by the closer sowing in the former zone; in the tchernoziom zone, by the slight amount of cultiva-

*Cost of Production of the Principal Cereals in European Russia.*

| Agricultural districts | Expenses per acre | Cost of production of one cwt. of grain | Percentage of total expenses | | | | |
|---|---|---|---|---|---|---|---|
| | | | for land rent | for labour | for seeds | for manure | for general expenses |
| | £ s. d. | £ s. d. | I. *Winter Rye.* | | | | |
| Central agricultural | 2.11. 8 | 0. 4.10 | 31.8 | 31.3 | 10.6 | 15.1 | 11.2 |
| Middle Volga | 2. 4. 4 | 0. 4. 5 | 25.5 | 38.7 | 10.9 | 14.0 | 10.9 |
| Lower Volga | 1.18. 5 | 0. 3. 3 | 14.9 | 58.2 | 9.4 | 6.0 | 11.5 |
| South-West | 2.15. 2 | 0. 4. 1 | 24.2 | 39.2 | 10.7 | 14.7 | 11.2 |
| New-Russia | 1.10. 6 | 0. 4. 1 | 32.0 | 41.8 | 10.7 | 3.4 | 12.1 |
| Little Russia | 2.16. 2 | 0. 4. 8 | 27.3 | 35.8 | 8.5 | 18.7 | 9.7 |
| *Tchernoziom Zone* | 2. 6. 3 | 0. 4. 4 | 26.4 | 39.5 | 10.2 | 12.9 | 11.0 |
| Industrial | 2.14. 5 | 0. 5. 1 | 20.5 | 32.9 | 12.2 | 25.4 | 8.9 |
| White Russia | 2.16. 0 | 0. 6. 0 | 19.0 | 34.2 | 12.2 | 25.0 | 0.6 |
| Lithuania | 2. 3. 7 | 0. 3.10 | 17.7 | 39.1 | 14.6 | 19.5 | 9.1 |
| Lakes | 3. 0. 2 | 0. 5. 2 | 15.4 | 36.0 | 13.4 | 27.4 | 7.8 |
| Baltic (1) | 3. 5. 6 | 0. 4. 6 | 19.7 | 33.0 | 11.1 | 28.6 | 7.6 |
| *Outside the Tchernoziom zone* | 2.15. 2 | 0. 4. 9 | 15.7 | 36.6 | 13.1 | 26.0 | 8.7 |
| European Russia | 2.10.10 | 0. 4. 6 | 20.6 | 37.9 | 11.8 | 20.0 | 9.8 |
| | | | II. *Oats.* | | | | |
| Central agricultural | 2. 3. 5 | 0. 3. 8 | 30.8 | 33.6 | 13.3 | 9.0 | 13.3 |
| Middle Volga | 1.16. 8 | 0. 3. 2 | 24.9 | 40.0 | 13.2 | 8.6 | 13.2 |
| Lower Volga | 1. 9. 1 | 0. 3. 2 | 15.8 | 56.7 | 12.3 | 1.5 | 13.7 |
| South West | 2. 7. 2 | 0. 3. 4 | 26.7 | 45.0 | 12.6 | 1.9 | 13.8 |
| New Russia | 1.17. 3 | 0. 3. 4 | 31.8 | 41.9 | 11.7 | 1.8 | 12.8 |
| Little Russia | 2. 5. 3 | 0. 3. 6 | 28.7 | 36.8 | 10.8 | 11.6 | 12.1 |
| *Tchernoziom Zone* | 1.19. 6 | 0. 3. 5 | 27.0 | 40.0 | 12.3 | 7.7 | 13.0 |
| Industrial | 2. 4. 8 | 0. 4. 0 | 14.1 | 39.2 | 18.7 | 16.1 | 11.9 |
| White Russia | 2. 6. 6 | 0. 4. 1 | 20.1 | 36.3 | 17.7 | 14.1 | 11.8 |
| Lithuania | 1.19. 2 | 0. 2.11 | 14.7 | 40.0 | 18.8 | 16.2 | 10.3 |
| Lakes | 2. 8. 0 | 0. 4. 3 | 16.7 | 38.7 | 19.6 | 15.2 | 9.7 |
| Baltic (1) | 2.10. 3 | 0. 2. 8 | 25.5 | 38.7 | 16.2 | 8.6 | 11.0 |
| *Outside the Tchernoziom zone* | 2. 4. 0 | 0. 3. 8 | 16.5 | 39.4 | 18.5 | 14.7 | 10.9 |
| European Russia | 2. 1.11 | 0. 3. 6 | 21.5 | 39.7 | 15.5 | 11.3 | 11.9 |

(1) For the Ural region and the Northern region, no data are available as to the cost of production of winter rye, winter wheat, oats or barley.

*Cost of production of the principal cereals in European Russia.*

| Agricultural districts | Expenses per acre | Cost of production of one cwt. of grain | Percentage of total expenses for land rent | for labour | for seeds | for manure | for general expenses |
|---|---|---|---|---|---|---|---|
| | £ s. d. | £ s. d. | | | | | |
| | | | III. *Spring wheat.* | | | | |
| Central agricultural | 2.13. 0 | 0. 5. 1 | 33.2 | 33.7 | 14.6 | 6.8 | 11.6 |
| Middle Volga | 2. 1. 3 | 0. 4. 5 | 25.8 | 40.1 | 17.6 | 4.7 | 11.8 |
| Lower Volga | 1.15. 3 | 0. 3. 8 | 20.7 | 53.4 | 14.3 | 1.7 | 9.9 |
| New Russia | 2. 1. 4 | 0. 4. 7 | 32.2 | 39.4 | 14.8 | 1.7 | 11.9 |
| Little Russia | 2. 2. 9 | 0. 4.11 | 29.7 | 35.1 | 14.2 | 10.2 | 10.8 |
| *Tchernoziom zone* | 2. 4. 3 | 0. 4. 7 | 28.8 | 39.4 | 15.1 | 5.4 | 11.4 |
| | | | IV. *Winter wheat.* | | | | |
| Central agricultural | 3. 1.11 | 0. 5. 1 | 33.5 | 30.4 | 12.5 | 14.8 | 8.9 |
| South-West | 3. 4. 4 | 0. 4.10 | 24.9 | 36.4 | 11.5 | 17.3 | 9.9 |
| New Russia | 2. 5. | 0. 4. 2 | 29.7 | 41.0 | 13.8 | 4.8 | 10.7 |
| Little Russia | 2.18.10 | 0. 4. 7 | 27.3 | 34.5 | 10.7 | 18.1 | 9.3 |
| *Tchernoziom zone* | 2.17. 8 | 0. 4.11 | 28.7 | 35.2 | 12.0 | 14.4 | 9.6 |
| White Russia | 3. 1.11 | 0. 5. 3 | 20.9 | 34.6 | 12.7 | 23.8 | 8.9 |
| Lithuania | 2.12.11 | 0. 3. 9 | 17.5 | 40.8 | 16.5 | 17.5 | 7.7 |
| Baltic | 3.17. 3 | 0. 4.10 | 18.8 | 32.0 | 12.2 | 30.0 | 7.1 |
| *Outside the Tchernoziom zone* | 3. 2.10 | 0. 4. 9 | 18.7 | 35.2 | 13.6 | 24.5 | 7.9 |
| European Russia | 3. 0. 3 | 0. 4.10 | 23.5 | 35.3 | 12.9 | 19.0 | 8.7 |
| | | | V. *Barley.* | | | | |
| Central agricultural | 2. 7. 2 | 0. 4. 1 | 33.0 | 36.9 | 10.2 | 5.7 | 14.1 |
| Lower Volga | 1.15.11 | 0. 3. 3 | 21.0 | 55.1 | 8.9 | 1.7 | 12.2 |
| South-West | 2.10. 0 | 0. 3. 4 | 26.8 | 36.2 | 12.1 | 12.0 | 13.0 |
| New Russia | 1.18. 7 | 0. 3. 2 | 27.4 | 45.1 | 19.9 | 2.3 | 13.4 |
| Little Russia | 2. 6. 0 | 0. 3.10 | 29.3 | 38.0 | 11.0 | 9.9 | 11.9 |
| *Tchernoziom zone* | 2. 2. 2 | 0. 3. 2 | 28.0 | 41.0 | 11.2 | 7.1 | 12.7 |
| White Russia | 2. 9.11 | 0. 4. 1 | 21.9 | 37.4 | 14.2 | 15.6 | 10.9 |
| Lithuania | 2. 1. 1 | 0. 3. 4 | 16.5 | 41.4 | 15.8 | 16.4 | 9.9 |
| Lakes | 2.10. 8 | 0. 4. 0 | 20.0 | 37.1 | 15.4 | 18.2 | 9.2 |
| Baltic (1) | 2.14. 7 | 0. 3. 8 | 25.4 | 49.0 | 13.4 | 12.0 | 10.1 |
| *Outside the Tchernoziom* | 2. 7. 1 | 0. 4. 0 | 17.9 | 39.6 | 16.0 | 16.5 | 10.0 |
| European Russia | 2. 4.10 | 0. 3. 5 | 22.7 | 40.3 | 13.7 | 12.1 | 11.3 |

(1) For the Ural region and the Northern region, no data are available as to the cost of production of winter rye, winter wheat, oats or barley.

tion of other crops than grain crops which might be charged with a part of the general expenses.

*Winter Wheat.* — The cost of production of this grain crop is nearly the same in the two zones (4 *s.* 11 *d.* per cwt in the tchernoziom zone as against 4 *s.* 9 *d.* outside this zone), in spite of the higher expenses per acre 4 *s.* 9 *d.* more per acre in the latter zone. This uniformity is due to the higher value of the straw in the zone outside the tchernoziom, the latter having been valued in this zone at £ 1. as against 11 *s.* 4 *d.* in the tchernoziom zone. Among the different expenses of production the chief importance appertains, as in the case of winter rye, to the expenses for labour (35.4 %) ; then, for the tchernoziom zone, the second place is occupied by the rent of land (28.7 %), and outside this zone by costs of manure. For the winter wheat likewise, the total expenses for rent of land and for manure is almost equal in both zones : 43.1 % in the zone of tchernoziom and 43.2 % in the other zone, and this total is the predominating factor in the cost of production. The importance of the other classes of expenses is almost the same as in rye cultivation.

*Oats* — Among spring cereals, oats is the most widely grown. Its cost of production in the zone lying outside the tchernoziom region is slightly higher than in the latter zone 3 *s.* 8 *d.* as against 3 *s.* 5 *d.* per cwt); the biggest regional fluctuations of this cost are observed in the zone lying outside the tchernoziom zone.

*Barley.* — Its cost price is greater in the zone outside the tchernoziom than in the tchernoziom zone (4 *s.* per cwt as against 3 *s.* 2 *d.*).

*Spring Wheat* — Its cultivation is concentrated in 5 regions of the tchernoziom zone. The cost price for all these regions is 4 *s.* 7 *d.* per cwt of grain ; the fluctuations between the different regions are very great.

With respect to the importance of each class of expenses in the growing of spring cereals, it may be repeated that the most important one, *i. e.* the highest relative amount, is represented by the costs for labour, and this importance is even greater than for the winter cereals. The second place in respect to all spring cereals in the tchernoziom zone falls to expenses for rent of the soil ; outside the tchernoziom, in the case of oat cultivation, to the expenses for rent of the soil, the latter being of almost equal amount in both cultivations : in respect of barley the expenditure for manure again is similar in importance or amount. It is furthermore necessary to point out that in spring cereal growing the expenses for manure are relatively more considerable than for winter cereals.

907 – **Wheat-growing on the Share-farming System in the State of Victoria. Australia : Results obtained in 1915.** — *The Journal of the Department of Agriculture of Victoria, Australia*, Vol. XIV, Part 3, pp. 179-180. Melbourne, March 10, 1916.

In 1905, the Department of Agriculture in Victoria asked farmers in that State to sow the largest possible area with wheat in anticipation of good prices. Unfortunately, a number of these farmers, having suffered severely owing to failure of the previous harvest through drought, did not possess the necessary funds to increase their wheat sowings. This fact led several city investors to take an interest in the question, and they expressed

a wish to invest money in wheat-growing. The Department of Agriculture then undertook to put the farmers into communication with the capitalists, and a number of the latter concluded arrangements under which their financial aid was afforded for the purpose of more extensive wheat sowing.

One of them sent the Department of Agriculture a summary of the results of his investment. He supplied the necessary funds for cultivating on the share farming system 204 acres in Borung and 500 acres in the Mallee, that is to say, he paid the farmer a given sum for putting in and taking off the crop, supplied $^2/_3$ of the seed and manure, and in exchange took for his account $^2/_3$ of the crop. The results obtained are set out in the appended Table.

### I. — *Borung.*

*Expenditure.*

| | £. s. d. |
|---|---|
| (1) Cash advance to farmer for working 204 acres of land at £ 1 per acre | 204. 0. 0 |
| (1) Seed wheat ($^2/_3$) at 7*s.* per bushel | 50. 0. 0 |
| (3) Two thirds of the cost of 5 tons of superphosphate | 15. 10. 3 |
| (4) Sacks | 35. 15. 0 |
| Total cost . . . £ | 305. 5. 3 |

*Receipts.*

Investor's share ($^2/_3$) of wheat: 2034 bushels

### II. — *Mallee.*

*Expenditure.*

| | £ s. d. |
|---|---|
| (1) Cash advance to farmer for working 500 acres of wheat at 16 *s.* | 400. 0. 0 |
| (2) Seed wheat ($^2/_3$), purchase and carriage | 74. 9. 0 |
| (3) Manure ($^2/_3$) | 25. 1. 0 |
| (4) Sacks, purchase and carriage | 44. 14. 6 |
| (5) Carriage of wheat to railway station, 8 miles | 41. 2. 0 |
| Total cost . . . £ | 586. 6. 6 |

*Receipts.*

Share of investor: 3 744 bushels of wheat and 52 tons hay.

Thus the total sum invested by the capitalist in this undertaking, £ 890.19.9, yielded him 6678 bushels of wheat at the railway siding, and 52 tons of hay.

Deducting from this sum the value of the hay at 30 *s.* a ton the grain would have cost the investor £ 813 in all or 2*s.* 5 ¼ *d.* per bushel. Therefore he can realise a considerable profit on its sale, as the price of wheat *f o. b.* in Victoria is at present 5*s.* 3 ½*d.*

The two farmers and the capitalist are so satisfied with their joint operations that they have entered into fresh contracts for still further extension of wheat-growing over 1000 acres this year.

908 – **Strawberry Farming as an Exclusive Cultivation in the South of the United States.** — *The Southern Fruit Grower*, Vol. XX, No. 5, pp. 101-102. Chattanooga, Ten. May 1916.

In the Southern part of the United States of America the cost price of strawberries relatively to the unit of area varies of course within fairly wide limits. In view, however, of the extension undergone by this cultivation in many Southern States, where there are numbers of farms engaged exclusively in strawberry growing, and where instances of farms cultivating more than 740 acres of strawberries and employing from 2000 to 3000 work-people at harvest time are not wanting, it is interesting to publish the average data relating to the expenses and production per acre as they result from a large number of statements issued from the United States Department of Agriculture.

The costs of cultivation, cropping and packing per acre vary within the following limits, the lowest of which is considered to be the average of the greater part of the producing centres, while the highest must be regarded as an extreme limit only reached in some parts where the crops are exceptionally early, such as Florida.

| | |
|---|---|
| Interest on capital invested . . . . . | $ 8 to $ 15 |
| Preparation of Land . . . . . | 5 to 10 |
| Manure . . . . . | 10 to 25 |
| Plant purchased . . . . . | 10 to 20 |
| Setting lants . . . . . | 8 to 12 |
| Cultivation, hoeing . . . . . | 20 to 35 |
| Mulching . . . . . | 15 to 25 |
| Total cost per acre for first year. . . . | 76 to 142 |
| Costs of picking, sorting and packing for an average crop of 2 000 quarts per acre . | 40 to 72 |
| Crates and Boxes . . . . . | 20 to 25 |
| Costs of carriage to railway etc . . . . . | 5 to 10 |
| Total expenses of cultivation and sale . . . | 141 to 247 |

Many strawberry growers secure a yield of 3 000 quarts per acre and yields of 4 000 and 5 000 quarts to the acre are not uncommon. A yield of 2 000 quarts is required to make the crop at all remunerative. The low prices ruling for strawberries at the time of greatest production have often caused losses to the growers ; some of them have found themselves under the necessity of leaving from 20 to 25 % of the crop on the field. This drawback is about to disappear owing to the creation of industries which will convert the strawberries into jam, etc., in the centres of production. The manufacturers in some cases, treat the strawberries on the spot, with an equal proportion by weight of sugar. They are put up in barrels and loaded in refrigerator cars, and sent to a cold-storage plant where they are kept until needed.

Some growers are at the present time studying the question of creating co-operative jam factories, with a view to utilising those strawberries

which are not adapted for putting on the market, being over-ripe, and also the question of the utilisation of the crop generally at times of over-production and fall of prices for fresh strawberries.

909 – **Cost of Milk Production in the County of Jefferson, State of New York, United States of America.** — HOPPER H. A. and ROBERTON F. E., in *Cornell University, Agricultural Experiment Station of the College of Agriculture*, Bulletin 357, pp. 135-162, fig. 60-65. Ithaca, N. Y., March 1915.

In order to ascertain the cost of milk production, the county of Jefferson, New-York, was selected. This is one of the New-York counties where agriculture is most progressive : it produces cereals, forage, etc., and it is inferior to two only of all the other counties in the number of dairy cows bred there. The bulk of the milk production is converted into cheese, although the trade in milk itself has made rapid strides of late years.

The organisation of a farm bureau in the county, which took place in April 1912, allowed of obtaining the data set out in the Bulletin in question. The bureau founded three societies for testing milk production, including 653 herds distributed through the different parts of the county. Registration for one year of the production of 834 cows resulted in the following facts :.

TABLE I. — *Average Production, Cost of Production and Profit for 834 cows.*

| Item | Production per cow (lbs.) | Cost | | |
|---|---|---|---|---|
| | | per cow | per 100 lbs. milk | per 1 lb. butter-fat |
| Milk yield | 6621 | | | |
| Butter fat | 241 | | | |
| Cost of feed | | $ 51.57 | $ .78 | $ .214 |
| Fixed costs | | 35.05 | .54 | .148 |
| Interest on investment in cow plus hauling costs per cow | | 11.25 | .17 | .047 |
| Total gross cost of production | | $ 98.47 | $ 1.49 | $ .409 |
| Credit by calf and manure | | 18.23 | .28 | .076 |
| Net cost of production | | $ 80.24 | $ 1.21 | $ .333 |
| Value of production | | 100.63 | 1.52 | — |
| Average profit | | $ 20.39 | $ .31 | — |

The cost of pasturage per month per cow varied in the different Societies from $ 1 to $ 1.5. The average spot value of mixed hay was $ 12 per ton. Ensilaged maize (forage) was reckoned at the rate of $ 4 per ton. The average cost of concentrates purchased was $ 30 per ton. The net average annual cost of feeding one cow was $ 51.57 or 64 % of the net average cost of maintenance.

TABLE II. — *Relation of Yield to Cost and Profit for 834 Cows. Comparison of Groups of Different Productive Ability.*

| Group | Number of cows in group | Average cost of production | Net cost of production | Value of production | Profit per cow | Net cost per 100 lbs of milk | Profit per 100 lbs of milk |
|---|---|---|---|---|---|---|---|
| 5 000 lbs or less . . . . | 159 | 4 161 | $ 57.20 | $ 63.24 | $ 6.04 | $ 1.37 | $ .15 |
| 5 001–7 000 lbs. . . . . | 360 | 5 993 | 74.20 | 91.09 | 16.69 | 1.24 | .28 |
| 7 001–9 000 lbs. . . . . | 214 | 7 843 | 92.00 | 119.21 | 27.21 | 1.17 | .35 |
| 9 001–11 000 lbs. . . . | 84 | 9 763 | 109.00 | 148.39 | 39.39 | 1.12 | .40 |
| over 11 000 lbs. . . . . | 17 | 12 377 | 112.60 | 188.13 | 75.53 | .91 | .61 |
| Total . . . | 834 | — | — | — | — | — | — |
| Average . . . | — | 6 621 | $ 80.24 | $ 100.63 | $ 20.39 | $ 1.21 | $ .31 |

The interest on the capital invested was reckoned at 5 %. The interest on the value of a cow was not assessed at more than 5 dollars nor the value of a calf at more than 10 dollars. The value of the manure produced in one year was reckoned at 15 dollars for a cow and 10 dollars for a bull. The cost of labour for milking and the care of the cow was fixed at 15 cents per hour of labour.

In Table I the most important figures relating to production, the expenses incurred thereby and the profit yielded are condensed. Table II indicates the relative profit furnished by individuals possessing different milk-producing powers.

In the study of the herds separately, it was observed that 7 out of 53 were kept at a loss of $ 1335.71. On the basis of the net cost of maintenance and the sums recovered, it was found that 161 cows representing 19 % of the total number of heads, occasioned their owners a loss of $ 1799.87, or $ 11.18 per cow.

The average cost of labour for tending each cow was $ 23.12 The average cost of conveying 100 lbs. of milk to a distance of 2.14 miles amounted to 11.7 cents. The profit yielded by each cow producing 10 000 lbs. of milk in the year exceeded by 51 % that given by each cow producing only 6 000 lbs.

910 – **Monograph on a Small Dairy Farm in Illinois.** — BILL A. J., in *Hoard's Dairyman*, Vol. LI, No. 7, pp. 282 and 286. Fort Atkinson, Wisc., March 10, 1916.

The University of Illinois Dairy Department has published the results of a monograph study of a small dairy farm in the county of Stephenson which forms a typical example of the well managed cultivated farm in this region which is devoted to agriculture. The data furnished by a study of the analytic accounts kept on the farm may be summed up as follows.

The farm in question has an area of 96 acres of an average value of $140 per acre. On the farm 16 cows are constantly kept, and their milk is converted into butter which is sold exclusively to private customers in the town of Freeport.

Out of the heads under which the working of the farm was classified, twelve yielded a profit of $ 2006.86 and four left a net loss of $ 25.40. Thus for the year there remains a net revenue of $ 1981.46 or $ 20.64 per acre, made up of $ 868.16 interest at 5 % on the total capital invested in the farm, and $ 1113.30 profit in the strict sense. The farmer owner drew from his farm, in addition to the above revenue, $ 700 as wages for his labour and that of one son, and $ 186.30 for the board and lodging of a permanent farm hand. The total revenue of the farmer owner therefore amounts to $ 2867.76 or $ 30 p. acre cultivated. The total household expenses of the farm amounted to $ 1802.24 ; there remains therefore a saving of $ 1065.52, or $ 11.10 per acre ; it is expedient, however, to remark that the household expenses include $ 42.155 used for education and charitable purposes ; these cannot be considered as strictly living expenses.

The principal receipts of the farm are from the dairy cattle, which in all gave a gross return of $ 2,868.95 divided as follows : $ 1,854.62 of butter sold (66 % of the dairy receipts), $ 38.52 of butter and milk consumed by the household, $ 44.70 of butter milk, $ 165.11 of skim milk, $ 220 of manure, and $ 546 from the sale of cattle (17 % of the total cattle receipts)

The dairy, however, defrays a large portion of the expenses of the farm, namely : $ 575.45 for the remuneration of manual labour, $ 106.16 for horse labour, $ 113.13 for maintenance of equipment, $ 120 for maintenance of buildings, $ 105.34 for interest on investment, $ 43.55 miscellaneous, $ 128.57 fat bought, and $ 1206.14 for feed ; a total cost of $ 2,398.34.

This leaves $ 470.61.

The average value of the dairy cattle is $ 74.37 per head ; that of the 10 head of young cattle is $ 39.75.

The total value of the food consumed, is divided as shown by Table I.

TABLE I. — *Distribution of total value of food consumed.*

| | | | |
|---|---|---|---|
| Ground maize | $ 101.25 | Silage | $ 360 |
| Forage gluten | $ 86.25 | Lucerne | $ 60 |
| Bran | $ 105.19 | Clover | $ 140 |
| Oil meal | $ 34.45 | Green forage maize | $ 12 |
| Barley | $ 30 | Straw | $ 35 |
| Oats | $ 15 | Pasturage | $ 22.7 |

The portion consumed by the dairy cattle amounts to $ 1016.65 in the following proportions : 34.7 % grain, 47.6 % roughage, 17.7 % pasturage.

The average return of each dairy cow is made up as follows : $ 115.91 for butter, $ 15.52 for butter milk, skim milk and products consumed by the household, $ 13.75 for manure, $ 29.75 from sale of cows and calves and increase of live weight, making a total return of $ 174.93 per cow.

Table II brings out clearly the high amount of the individual production.

TABLE II. — *Individual Production of Cows.*

| No of cow | Age | Fat produced | Milk produced |
|---|---|---|---|
| 30 | 4 years | lbs. 447 | lbs. 10 678 |
| 37 | 7 | 430 | 11 764 |
| 44 | 2 | 208 | 6 083 |
| 24 | 3 | 328 | 8 892 |
| 33 | 5 | 379 | 10 757 |
| 42 | 3 | 320 | 11 252 |
| 40 | 3 | 259 | 7 060 |
| 38 | 4 | 285 | 8 164 |
| 43 | 2 | 266 | 7 629 |
| 39 | 3 | 302 | 8 964 |
| 21 | 9 | 318 | 9 734 |
| 41 | 5 | 342 | 6 443 |
| 35 | 5 | 267 | 7 908 |
| | Total | 4 051 | 115 268 |
| | Averages | 312 | 8 867 |

This production of milk furnishes in all 5 509.5 lbs of butter of an average price of 33.7 cents.

With regard to the expenses for each dairy cow, they are made up as follows: $ 75.38 for food, $ 42.61 for labour, $ 31.91 general expenses; total $ 149.90.

Thus a net profit of $ 25.03 per dairy cow remains, including the calves and the butter manufacture in the valuation. Without these two last factors, the net profit per cow drops to $ 11.84 with a cost price of $ 63.54 for food and an expenditure of $ 29.05 for labour; in all, an annual outlay of $ 108.12 per dairy cow.

The calculation of the receipts, made for each cow alone, *i. e.* independently of the production of young animals and of butter manufacture, yields an individual profit of $ 84.02 represented by the market value of the fat in the milk (calculated as such and not in the form of butter), and a total individual value of $ 119.96. In this method of calculation each pound of fatty substance in the milk costs 37.5 cents and fetches 41.5 cents leaving a profit of 4 cents.

The 12 tables in which the expenditure and profits of each cow are fol lowed up in their variations during the various months of the year present a special interest. Another table separates the production of the 7 winter months from that of the 4 summer months. The winter period furnished 2505 lbs. of fat and the summer period 2902 lbs., the feeding expenses fell from $ 100.58 per month during the winter to $ 62.52 per month during the summer period. The costs of labour (looking after the cattle, etc.) also decreased, dropping from $ 40.15 during the winter period to $ 36.74 during the summer period.

The young cattle (10 head) have an average gross yield per head of

$ 36.28 against an average expenditure per head of $ 28.11., with a profit of $ 8.17 per head, which proves that from raising a good breed of dairy cattle a profit per head may be obtained which is only 1/3 below that yielded by the dairy cattle themselves. From an examination of the sale of butter in reference to its cost price it is found that the cost of making and selling is 32.1 cents per lbs. The butter sells at 33.6 cents per lb. and if allowance is made for the butter milk, the income is raised to 34.4 cents, leaving a gain of 2.3 cents per lb.

The number of hours of labour was, during the course of the year 6 952 and the cost was $ 1275, which is equivalent to 2.2 labourer units.

The hired labour furnished by a permanent workman cost $ 388.81 for wages and $ 186.30 for board and lodging. The work of the farmer's son was estimated at $ 160, and that of the working farmer at $ 600 ; the latter did 47 % of the total work ; 45 % of the total work was absorbed by the dairy cows.

The distribution of the work during the year comprises : 457 hours per month for January, February and March; 611 hours per month for April, May and September ; 741 hours per month for June, July and August ; and 507 hours per month for October, November and December, with an average of 579 hours of labour per month.

The work of the horses is divided as follows : 210 hours per month for January, February and March, 577 hours for the 5 following months, and 387 hours for the last 4 months.

The manual labour is subdivided as follows : 46.8 % for the dairy cows and dairy and 53.2 % for all the other labour ; the horses' work : 16.6 % for the dairy cows and 83.4 % for all the other work.

The results as regards cultivation are as follows : 15 acres of maize, with a yield of 51 bushels per acre, a value of $ 28.89 per acre and a profit of $ 3.35 per acre ; 8 acres of maize for ensilage, with a yield of 11 tons per acre worth $ 450.12 per acre, costing $ 441.63 and giving a profit of $ 8.49 per acre ; 20 acres of oats with a yield of 45 bushels per acre worth $ 19.79 against a cost of $ 14.02 and a profit of $ 5.75 per acre ; 3 acres of barley, which showed a slight loss, and 3 acres of lucerne, also worked slightly at a loss, as there was only the catch crop with oats ; 18 acres of clover yielded 1.6 tons per acre worth $ 16.86 against a cost of $ 13.53, and a profit of $ 3.33 per acre.

## AGRICULTURAL INDUSTRIES.

INDUSTRIES DEPENDING ON PLANT PRODUCTS

911 — **A Palm Fruit Used for Flavouring Brandy.** — GRIEBEL C. and BAMES E., in *Zeitschrift für Untersuchung der Nahrungs- und Genussmittel*, Vol. 31, No. 9, pp. 282-290. Munster i. W., May 1st, 1916.

In order to give the different varieties of brandy a special taste, flavouring materials are often used, which are mostly extracts from certain varieties of prunes, green walnuts, almond shells, etc. The writers describe a drug of this kind which is marketed under the name of " Bayas negros "

and has not yet been thoroughly studied, probably because morphologically it resembles a small prune. An attentive study showed that this drug is the fruit of the palm *Serenoa serrulata* Hook f., which grows in South Carolina and Florida.

According to the publications in connection with this subject the fruits of *Serenoa serrulata* are used to prepare an extract, the "Saw palmetto", used chiefly in North America as a remedy for pulmonary diseases, but they do not furnish other particulars with regard to this drug. The writers therefore proposed to study it after obtaining fruits of *Serenoa* from North America and some "Saw palmetto". They describe in detail the results of their researches.

The fruit is oval, contains a single seed and weighs from 1.5 to 3 gr. Its pericarp, which is clearly divided into epicarp, mesocarp and endocarp, contains the greater part of the aromatic substances. The physical composition of the fruit is as follows:

| | | |
|---|---|---|
| Pericarp | Epicarp | 36 % |
| | Mesocarp | 16 |
| | Endocarp | 10 |
| Seed | | 38 |

The chemical composition of the pericarp is as follows:

| | |
|---|---|
| Water | 15.41 % |
| Dry matter | 84.59 |
| Mineral matter | 5.74 |
| Chlorides such as Na Cl | 1.52 |
| Fat (ether extract) | 26.75 |
| Invert-sugar | 28.26 |
| Extract free from sugar and soluble in water | 16.34 |
| Insoluble matter | 13.30 |

More than one fourth of the weight of the pericarp is therefore made up of fatty matter.

The strong rancid odour of the pericarp at once suggested that its fat contains a large quantity of free acids. It was in point of fact found that the smell and state are chiefly due to free acids, probably caproic acid and other acids of low molecular weight. The crude fat extracted by ether is an oil of dark orange colour, yielding on analysis the following results:

| | |
|---|---|
| Refractive index at 40 degrees | 31.2 |
| Iodine index | 44.3 |
| Acid index | 201.2 |
| Saponification index | 226.0 |
| Reichert-Meissl index | 0.5 |

The crude fat contains: 75 % of fatty acids and 25 % of neutral fat.

This analysis suggests the presence of an enzyme decomposing the fatty substances in the pericarp of *Serenoa*. Studies carried out with a

view to ascertaining this did not give conclusive results, but it is beyond doubt that a lipase does exist. It would seem that this lipase disappears during or after the ripening of the fruit.

The high content of fatty acids in the crude fatty matter is by no means abnormal for a fat originating from a palm fruit. It is precisely to these acids that the fruit owes its characteristic odour and its use in the manufacture of flavouring substances. An important part, however, is also played by an etherifying enzyme, as is particularly shown by the experiments with the American " Saw palmetto ". On extracting the fruit with dilute alcohol, a liquid is obtained containing ethers the smell of which strongly suggests essential oil of grape (essence of brandy). Probably there is not one only but two enzymes acting in contrary directions, one of which decomposes the glyceric ethers of the fatty acids into acid and alcohol while the other once again etherifies the free fatty acids by means of monovalent alcohols. The action of the enzyme does not appear if the fruits of *Serenoa* are first treated with bichloride of mercury or other toxic substances.

From these observations it is concluded that the addition of an extract from *Serenoa* fruits to brandy may produce the impression of the presence of a percentage of substances imparting the natural flavour much higher than the actual percentage. This extract therefore must not be put into the same class with the other extracts (prunes, green walnuts, etc.) ordinarily used for flavouring brandy, as it does not merely flavour the latter, but " doctors " it, so to speak, and is use was rightly prohibited 2 years ago in Germany in brandy manufacture.

912 - **Experiments in connection with Spinning Cotton after Fumigation with Hydrocyanic Acid.** — DEAN WILLIAMS S., in *United States Department of Agriculture, Bulletin* No. 366, 12 pp. Washington, D. C., April 24, 1916.

To prevent introduction of the pink boll-woorm (*Gelechia gossypiella*) (1) in imports of foreign cotton, the Federal Horticultural Board of the United States of America found fumigation with hydrocyanic acid effective. It destroys the larvae even in the centre of a compressed bale of cotton. With a view to ascertaining whether these fumigations injure the fibres of the cotton the Department of Agriculture had practical spinning tests carried out at the New Bedford Textile School with two kinds of cotton, one part of which had been subjected to fumigation and the other had not. The results showed that the fumigations of cotton with hydrocyanic acid have practically no ascertainable effect upon the proportion of waste, the quality of the yarn, tensile strength, or the bleaching, dyeing and mercerising qualities of the cotton.

(1) See *B.* March 1913, No. 213, *B.* Sept. 1913, No. 1119 and *B.* June 1916, No. 714 (*Ed.*).

913 – **Factors Affecting the Fat Content of Whole and Skim Milk.** — GUTHRIE E. C. and SUPPLEE G. C., in *Cornell University, Agricultural Experiment Station of the College of Agriculture, Department of Dairy Industry, Bulletin* 360, pp. 271-280, fig. 117-125. Ithaca, N. Y., April 1915.

Several factors influence the fat content of cream obtained with a separator (independently of the variations of such content due to displacements of the regulating device), *viz*: the temperature, speed, rapidity of feed, content of fat in the full cream milk, the variations in the quantity of liquid (skim milk or water) which is passed through the drum of the separator at the close of the operation in order to force out the residue completely, or, as is the case in practice, in the quantity of whole cream milk used for this purpose, and the quantity of milky deposit formed.

In order to determine the nature of these influences, the writers undertook the experiments described in the Bulletin in question, making use of different types of separator. The results proved the following:

The influence of low temperatures (the operations were conducted at temperatures varying from 21.1° to 32.2° C) on the percentage of fat in the milk and the skim milk varies with the different types of separator. The results, which are particularly conclusive for two types of separator, seem to demonstrate that, all other things being equal, when the temperature is lowered the quantity of cream extracted is diminished, but that the weight of the fat contained in this cream remains constant.

With some types of separator the percentage of fat in the cream varies markedly even for a variation of 10 revolutions per minute in the revolution counter (corresponding to 1 500 revolutions per minute in the drum); on the contrary, other types exhibit this influence in a much less degree. In regard to the types of separator which showed variations in the percentage of fat, the writers find that when the speed diminishes the weight of the cream obtained increases, which was obvious *a priori*, but that the weight of fatty matter contained in the cream still remains constant. A variation of 10 revolutions per minute in the counter had no appreciable influence on the percentage of fat in the skim milk. The percentage of fat in the cream is practically directly proportional to the percentage of fat in the full cream milk. It increases slightly when the milk enters the drum slowly. The variation in the quantity of full cream milk utilised, or in the quantity of liquid employed to force the remaining cream out of the drum at the end of the skimming, has but little influence on the percentage of fat in the cream.

The milk deposited has only an insignificant influence on the percentage of fat in the cream and the skim milk, provided its quantity is not sufficient to choke up the passage through the drum.

914 – **Metallic Taste in Dairy Industry Products.** — GUTHRIE E. S. in *Cornell University Agricultural Experiment Station of the New York State College of Agriculture, Department of Dairy Industry, Bulletin* 373, pp. 605-644, 19 tables. Ithaca, New York, April 1916.

The metallic taste, which influences the price of dairy industry products, was first detected in 1901. The writer entered into correspondence with a large number of experts in order to determine exactly what is to be

undestood by " metallic taste ". According to these experts, such taste is closely akin to the fishy taste of oil, tallow, etc. ; it is difficult to detect, but, nevertheless, qualified men succeed in detecting it when they have become familiar with it.

The writer studied the conditions under which the metallic taste appears in dairy products. He found that the direct absorption of metals may produce this flavour. His observations have furthermore demonstrated that a high content of acid seems essential for the development of the taste, which is more likely to appear during the very hot season. Furthermore, with the exception of butter milk, the taste only appears when the fat content is high. The taste appears suddenly, and low temperatures very often make it more noticeable.

Besides the direct absorption of metals, bacteria may produce the metallic taste. A quantity of butter milk put into sterilised bottles was found to have this flavour in some cases. In 241 samples of cream placed in sterilised glass bottles the metallic taste was produced in 79 by the inoculation of butter milk having that flavour ; likewise in 167 samples of cream put into sterilised glass bottles the taste was produced in 52 by inoculation with bacteria.

The writer has studied the microflora of products having a metallic taste ; he found on the other hand that the addition of formaldehyde only rarely prevents the occurrence of the taste, which appeared 35 times in 41 samples of butter milk of which there had been added, per 100 cc., from 2 to 30 drops of a solution containing 37 to 40 % of formalmaldehyde.

Finally the writer endeavoured to ascertain the relation between the production of enzymes and the appearance of the flavour by utilising products which prevent the growth of bacteria but allow of enzyme action. For this purpose toluene and chloroform were used : the results were not satisfactory, owing to the difficulty of distinguishing and analysing the taste of the liquids treated with these antiseptics. Nevertheless, it seems that the metallic taste can be produced by the action of enzymes.

In the inoculation experiments it was found that the bacteria capable of producing the metallic taste appear to be the same as the well known bacteria found in milk, and belonging to the group *Bacterium lactis acidi ;* the only difference, if any, was that the former were a little larger than the types representing the group, but only very slightly. It is therefore concluded that the organism which causes the metallic taste is a member of or derived from the group *Bacterium lactis acidi.*

In an appendix, a bibliographical note gives a list of 8 works .

915 - **The Production of Beef in South Africa.** — HOLM ALEX, in *The Agricultural Journal and Small-Holder of South Africa*, Vol. III, No. 16, pp. 104-109. Johannesburg, April 1916.

The production of beef in the South African Union has made rapid strides of late years, particularly during the last two years.

In 1911 the Union possessed 3 500 000 cattle. In 1914 there were 5 797 000. The writer estimates their number at about 8 000 000 in the first half-year of 1916. In 1903 the value of imports of beef and mutton

amounted to £2 885 000. This figure continually declined until 1915 when it had fallen to absolutely insignificant proportions (£593).

On the other hand, in 1914 there were exported 532 358 lbs. of meat of a value of £12 352. In 1915 the exports were 32 897 quarters of beef, and in the first 11 months of the same year the meat exports totalled 6 211 752 lbs. of a value of £113 296.

In 1915 South African beef fetched on the London market from 5 ½*d* to 7 ½*d*. per lb. or from 2*d* to 3*d* per lb. more than it would probably have fetched before the war. The cost of exportation, allowing for the value of the by-products, is probably about 1 ½*d*. per lb.

In order to ensure still further the progress of this industry, it is advisable to use good bulls of a beef breed, so as to obtain earlier maturity, heavier carcases and better adaptation for fattening.

At present South African cattle are chiefly draught animals. They only attain maturity at the age of 6 years, and their quarters weigh from 110 to 160 lbs., while those, of Argentine cattle for instance, average 180 to 200 lbs.



916 – **Experiments in Potato Storage with Sulphur.** — GERLACH, in *Illustrierte landwirtschaftliche Zeitung*, 36th Year, No. 37, pp. 268. Berlin, May 6, 1916.

Reference is made to an experiment in potato ensilage carried out on the Mocheln model farm in order to test sulphur as a preservative. On the 29th October, 2 stacks of potatoes of the "Ella" variety were put into earth silos about 16 ins deep. Each stack contained 2 200 lbs. of hand-sorted tubers. The potatoes were laid on a thin layer of straw, then successively covered with a layer of straw, earth, and potato leaves and stalks, and, when winter approached, with a second layer of earth. Silo N° 1 received no addition of sulphur ; in silo N° 2 there was first placed a thin stratum of crude powdered sulphur, then a 9 to 12 inch layer of potatoes, and so forth. On the 22nd April following the silos were opened, and the potatoes sorted and weighed. The following were the results found : silo N° 1 contained 2048 lbs. of healthy and 19 lbs. of rotted potatoes; silo N° 2 had 2099 lbs. of healthy and 35 lbs. of rotted potatoes. Thus the rotting of the potatoes was not prevented by sulphur, but the latter impeded the reduction of weight in the potatoes.

917 – **Investigations into the Part Played by the Amylase in Potato.** — See this *Bulletin* No. 851.

918 – **Experiments in Preserving Broken Eggs.** — EICHELBAUM GEORG, in *Biochemische Zeitschrift*, Vol. 74, No. 3 and 4, pp. 176-184. Berlin, April 29, 1916.

At the suggestion of the Central German Egg Purchasing Company the writer carried out preservation tests by different means. The object was to find a substance which can be added to the thoroughly stirred liquid mass of broken eggs, thus enabling the latter to be transported in barrels to long distances.

The preliminary tests showed that substances with strong odour cannot be used, as it is afterwards impossible to free the eggs from the odour communicated to them. The writer indeed showed that even highly vola-

tile liquids, such as toluol and chloroform, impart their smell to eggs and cannot be entirely got rid of. Eggs preserved by the aid of these substances are no longer fit for consumption.

A study was made of the action of the following substances: toluol, chloroform, hydrochloric acid, acetic acid, mustard oil, benzoate of soda, boric acid, and salicylic acid. As time did not allow of keeping the eggs for a very long period, the conditions of lengthy transport were imitated by carrying out the experiments at a temperature of 37 to 38° C., at which the eggs were kept for 10 to 14 days. The eggs used were not entirely fresh, being market eggs.

The results of the experiments may be summarised as follows :

| | |
|---|---|
| *Toluol* . . . . . | The smell and taste imparted to the eggs cannot be removed. |
| *Chloroform* . . . . . | Do. |
| *Hydrochloric acid* . . | When used in the proportion of 0.5 % the eggs are liable to rot and mould. |
| *Acetic acid* . . . . . | When used in the proportion of 0.65 % rotting is prevented but the eggs acquire a sour taste and coagulate. |
| *Benzoate of soda* . . . | When used to the amount of 1.75 % the eggs decompose and rot within 8 or 9 days. |
| *Salicylic acid* . . . . | Used in the proportion of 1-2 %, no rotting but deleterious change in colour and smell. |
| *Mustard Oil*. . . . . | Strong smell of mercaptan; eggs no longer fit for consumption. |
| *Boric acid* . . . . . | Used in a quantity of 1-2 %, no rotting after keeping for 12 days. |

CONCLUSIONS. — For the preservation of broken eggs, only acetic acid, salicylic acid and boric acid give a sufficiently good result, but they must be used in fairly strong doses. The eggs nevertheless retain some flavour due to the preserving agent, and undergo chemical changes. The best preserving agent is undoubtedly boracic acid, the use of which in Germany however meets with great difficulties on the part of the authorities ; it is thought that the preservation of broken eggs should only be resorted to in exceptional cases, when any other means of keeping them is impossible. It is nevertheless recommended that these experiments should be repeated.

919 – **Sale of Cattle through the Agency of Co-operative Shipping Associations in the United States.** — DOTY S. W. and HALL L. D., in *United States Department of Agriculture, Farmers' Bulletin*, No. 718, pp. 1-16. Washington, April 10, 1916.

In those parts of the United States where cattle breeding is not one of the most productive branches of farming, and especially wherever the dairy industry predominates, the majority of farmers have only a small number of animals available for sale at a given moment. This number is generally insufficient to load complete trucks, but exceeds the needs of the local markets and must be disposed of at more distant markets.

This state of things, which cattle dealers were not slow to turn to account, has led to the creation among farmers of co-operative cattle-forwarding societies. Examples were not wanting, even in the past, of farmers coming to an agreement to effect this class of forwarding, but it is not until the last 7 years that these associations arose and developed (first starting in 1908 at Lichtfield, Minnesota).

At present the United States Department of Agriculture records the existence of about 500 societies of this kind. There are 200 in Minnesota alone, and the others are found, in decreasing order of number, in the following States : Wisconsin, Nebraska, Iowa, North Dakota, South Dakota, Kansas, Michigan, Illinois, Indiana and Ohio.

The annual increase in the number of trucks forwarded by the different societies proved clearly that farmers have rapidly appreciated the advantages of these institutions. It is estimated that in Minnesota alone $6 000 000 worth of cattle were sold in 1914 through co-operative forwarding and selling societies.

The expenses of sale for 1913 and 1914 averaged 33 cents per cwt. to the Lichtfield society. Farmers are of opinion that this cost is from 10 to 40 cents per cwt. below the allowance which dealers made the basis of their offers to farmers. Assuming that the allowance imposed by the buyers was only 50 cents per cwt. the Lichtfield association will have saved the forwarders about $ 6221 in 1914.

The simplicity of organisation, and the fact that no capital is required, render the collective sale of cattle very interesting in rural districts, where more complex forms of co-operative societies are more difficult to establish.

The principal conditions required for the success of these societies are : an able manager and full confidence on the part of members. The manager must be well known in the region and must be regarded as a man thoroughly at home in the cattle trade, and one in whom farmers can place entire confidence.

Practice has shown that in order to avoid possible mistakes it is indispensable to number and brand each animal at the forwarding station, even in the case of pigs or sheep, and to make a note of all such particulars as may be required to be taken into account by the manager with a view to a fair distribution of the expenses and profits, or possible losses.

Farmers were quick to realise that the profits previously made by the cattle dealers thus went into their pockets, because through the agency of the society they really sell at the genuine market price less the actual selling expenses. Moreover, the work of an able society manager exerts an influence throughout the region in the direction of improving the methods of cattle breeding, and rendering farmers more familiar with the real market prices. These indirect benefits are no less important than those obtained direct by the members of different societies.

920 – **Control of the Sale of Skim Milk.** — BORDAS F., in *Annales des Falsifications* Nos. 90-91, pp. 146-156. Paris, April-May, 1916.

After having rapidly considered the various operations of industrial commercial separating and the chemical and biological characteristics of skim milk, the writer opposes the current opinion that skim milk is simply milk deprived of its fat. He lays stress on the fact that it is an incomplete food which has also lost its glycero-phosphoric acid, and been enriched on the other hand with numerous micro-organisms. After a study of the dietetic value of skim milk and a reference to the works published on the question, chiefly in Denmark, the attempt is made to show that the require-

ments of infants cannot be satisfied by giving them milk deprived of its fatty matter. It is shown that it is not a matter of indifference from the physiological point of view what is the age of the milk given to a new-born child. The milk given to an infant should be suitable for the age of the child. On the other hand, from the economic point of view, the writer proves that it is not in the producer's interest to sell milk skimmed to the extent of 85 % and still less entirely skimmed milk. This trade apparently can only be remunerative if the skim milk is sold at the same price as the whole milk. The writer therefore thinks it desirable to record the conclusions adopted by the Society of Technical Chemists of France at its sitting of the 10th May 1916, with which he is in complete agreement.

In view of the fact that the prevention of frauds due to the mixing of skim milk with natural milk presents the utmost difficulty:

The Society of Technical Chemists of France is of opinion that far from endeavouring to facilitate the sale of skim milk, or at any rate legalising its sale by municipal or prefectorial orders, it would be preferable in the interests of public health and commercial morality not to modify the present situation in any way, experience having shown that the municipalities which have recourse to regulation of the sale of skim milk by municipal order, for the purpose of putting a stop to frauds by skimming, have only obtained the practical result of bringing about the almost complete disappearance of full cream milk;

Nevertheless, if it should be considered necessary for reasons of which the Society has no cognisance whatever, to resort to control, such control should be sufficiently severe and stringent to prevent a mother, in any case, and in any town of France, who might be unaware of the danger run by her child, being liable to have skim milk supplied to her in the place of natural milk.

# PLANT DISEASES

## GENERAL INFORMATION.

LEGISLATIVE AND ADMINISTRATIVE MEASURES FOR THE PROTECTION OF PLANTS.

921 – **Decree of the Lieutenant-general of the King of Italy dated the 28th June 1916, No. 795, containing Measures for the Control of Field-voles in Apulia and adjacent Regions.** — *Gazzetta ufficiale del Regno d'Italia*, Year 1916, No. 158, pp. 3463-3464. Rome, July 6, 1916.

Art. 1. Antiphylloxera Associations (1) are bound to engage in field-vole control. For that purpose they are authorised to enter on their contribution lists all the owners of cultivated lands.

Art. 2. For communes which do not belong to an Antiphylloxera Association the Prefect will take the necessary measures, forming a compulsory Association for field-vole control, in pursuance of art. 38 of the regulations approved by decree of the Lieutenant-General dated March 12, 1916, No. 723 (2).

Art. 3. The State will contribute up to one half of the expenses entailed by the present decree ; it will advance the whole of the amount, and, for this purpose the sums appropriated in chapter 50 of the estimates of the Ministry of Agriculture for the financial year 1916-1917 will be increased by 600 000 lire.

The associations will be bound to refund one half of the amount of the expenses.

Art. 4. A Commissioner appointed by the Minister of Agriculture shall preside over the assessment of the expenses to be defrayed and their division between the State and the Associations.

Art. 5. In the estimates of receipts every year the share of expenses to be repaid by the Associations shall be entered, in accordance with art. 27 of the regulations approved by the decree of the Lieutenant General dated the 12th March 1916, No. 723, together with the interest provided in that article.

(1) See *B.* August 1913, No. 995, and *B.* January 1914, No. 71.

(2) These are the regulations for carrying into effect the law of the 26th June 1913, No. 888, which contains measures for the purpose of preventing and controlling plant diseases. See *B.* August 1913, No. 995.

The debt of the Associations will be secured in the manner provided in articles 28 and 29 of the regulations aforesaid.

Art. 6. No alteration can be made in the present administrative organisation of the Antiphylloxera Associations

## DISEASES NOT DUE TO PARASITES OR OF UNKNOWN ORIGIN.

922 — **Measures to prevent Injury by Frost in Catalonia, Spain.** — VIA RAVENTÓS JOSÉ, in *Resumen de Agricultura*, XXVIIIth Year, Part 2, pp. 68-80, Fig. 2. Barcelona, 1916

Observations on frosts and the best methods of preventing injury thereby in the vine-growing zone of the Lower Ebro. Under normal working conditions it is not always possible to make use of the instruments which allow of forecasting the arrival of cold waves a sufficient time beforehand as in meteorological Observatories. There is, it is true, a relation between the temperature at the moment of sunset and the minimum temperature which can be reached during the night, but this relation changes with the variations of the mistiness and hygroscopic conditions of the air, and the value of these factors varies, even in a short time, within very wide limits. On the other hand, observation and long practice enable vine-growers to foresee the arrival of frost with some approximation to the truth, but certainly not with all the desired accuracy where it is a question of combating low temperatures by smoke, a costly and troublesome method which of course should only be applied when really indispensable. Good results have been obtained with automatic alarms. Their cost is not excessive and they are easy to use. They consist of a RICHARD thermometer set up in the middle of the vineyard at a height of 20 to 25 cm and communicating with a bell, actuated by the current of three LABLANCHE cells, which rings when the temperature sinks to the danger limit : one fourth of a degree centigrade above zero. That is the time when the fires must be lit. An excellent kind of fuel for the purpose is creosote briquettes. They are placed in LESTOUT furnaces, or even in simple wooden boxes, slightly sunk into the ground and arranged round the vineyard at a distance of 26 feet apart. On burning them under these conditions for a period of 5 hours, the cost (including material, labour, etc.) is about 16*s*. per acre, which is far from being an excessive amount, as the injury which the frost would have produced in default of treatment must be taken into account. From a large number of observations and experiments the writer concludes that low temperature control in Catalonia is fully justified and remunerative. It would be much more so if the vine-growers were to form an association and create a special organisation for this purpose, with a system of well placed watch Stations.

923 – **Some Practical Means of Control of Wheat " Stretta ", in the South of Italy.** — MANCINI CAMILLO in *Il Coltivatore*, 62nd Year, No. 17, pp. 523-528. Casal Monferrat, June 20, 1916.

Wheat growing, extensively practised in the South of Italy, is very much checked by the disease called " stretta " of the wheat. This is a sort of sudden stoppage of growth accompanied by an almost certain drying when the wheat is in ear, and followed by unusual acceleration towards maturity, although the grain is not yet entirely full. The culm yellows early, and this yellowing afterwards spreads to the entire ear or a part only. The affected ear remains half empty and gives a smaller yield, because at the same time the grains are atrophied, small and light. " Stretta " usually occurs between the end of May and the beginning of June. The principal cause which gives rise to it is drought, and insufficient fertility of the soil is another cause. " Stretta " is more frequent in years with a hot and dry spring, and is more serious in too compact or too light soils, which, for opposite reasons, suffer more from the drought. On the other hand, " stretta " does not occur in wheat sown on beans or lupin ploughed in as green manures, or on broken-up meadow, lucerne, clover or sainfoin land.

From personal observations and experiments carried out during 40 years as an agriculturist, the writer advises the following means as being very effective against " stretta " and within the reach of all : 1) Deep tillage of the soil at the right time : very dry soils when deeply tilled during the summer did not suffer with " stretta ", while neighbouring soils tilled very superficially with the plough did not even yield an equivalent of the seed ; 2) thin sowing, both in rows and broadcast, accompanied by rational and sufficient manuring, so as to allow and induce tillering ; 3) cultivation work in autumn, winter and spring ; it is very useful to cultivate two or three times between the autumn and the beginning of spring.

924 – **Studies on the Amylase in Healthy Potatoes and in Those Suffering from " Leaf Curl ".** — *See* No. 851 of this *Bulletin*.

925 – **Diseases of Undetermined Origin in the Tomato, in Ontario.** — HOWITT J. E. and STONE R. E., in *Phytopathology*, Vol. 6, No. 3, pp. 162-166. Baltimore, Md., 1916.

In 1914 and 1915, tomatoes grown under glass were attacked by a disease the origin of which is still unknown, in several parts of Ontario. On the leaves, between the principal ribs, clearly outlined angular spots of a dark colour made their appearance, often combining and forming larger blotches. The infection involves not only the mesophyll but also the secondary ribs (more rarely the main ones) so that the bundles of vessels are coloured brown. The leaves attacked do not grow normally, and in time wither and fall.

The soft young leaves of the terminal branches are the first to be attacked, then the disease descends towards the base, where it also attacks the already grown leaves.

Here and there along the stems, without any specific localisation, oblong spots 1 to 3 cm. in length appear, only involving the most superficial tissue and rarely (in fact only in very severe cases) extending to the vascular bundles.

The diseased fruits exhibit hollow spots assuming different shapes, round or oblong, angular, with a diameter of 1 to 8-10 mm. In most instances the affection does not go beyond the surface of the fruit, but at times it penetrates to the centre, following the septum. The diseased parts do not colour and remain green and hard even during the ripening phase. When the disease is far advanced, the entire fruit remains discoloured and falls before it is ripe.

It was thought at first that the disease could be identified with the brown rot of the tomato, caused by *Bacillus Solanacearum* E. F. S., but a closer examination did not disclose the presence of any specific pathogenic germ. Attempts at artificial inoculation with infected tissue were entirely negative. Some growers attribute the characteristic affection of the leaves and fruits to the use of hydrocyanic acid fumigations, with which *Aleurodes* is controlled, but test experiments carried out to prove this gave negative results.

Experiments on sterilised soil seem to suggest the existence of a relation between the origin of the disease and the soil, but considering the absence of any pathogenic germ, it must be assumed that the disease is due to some chemical or physical defect of the soil, the action of which is to all appearance mitigated by sterilisation.

926 – **A New Infectious Mosaic Disease in the Cucumber, in America.** — DOOLITTLE S. P., in *Phytopathology*, Vol. VI, No. 2, pp. 145-147. Baltimore, Md., 1916.

Experiments and tests in connection with a new "mosaic disease" observed in the cucumber, carried out by the Author in a field at the Station of Hamilton (Michigan), during the period 1914-1915. The first symptom of the disease is the appearance of black and yellow dappled spots between which the still green tissue stands out in distinct projections. If the infection develops, signs of growth cease, while on the leaves likewise a mosaic may be seen to appear, with dark green and light green spots. In the course of time, the diseased leaves wither and fall. On the shoots attacked, imperfect buds develop with dappled foliage; the flowers are few and the number of fruits set is still fewer.

The result of the experiments may be summed up as follows: 1) although it has not yet been possible to isolate the specific pathogenic agent, as the disease spreads very rapidly it obviously is a very virulent disease of highly infectious character; 2) if infected matter is inoculated into healthy cucumbers, the characteristic symptoms generally appear within a period of 18 to 20 days, while all the control plants remain healthy; experiments of this kind, with hypodermic injections of sap extracted from the diseased tissues, were carried out in several places in 1914 and 1915, always followed by a clearly positive result; 3) artificial infections are also obtained by tearing off the leaves of a healthy plant and touching the wound with the broken leaf-stalk of a diseased plant; 4) The fresh expressed juice of diseased plants as well as that from diseased fruits inoculated into a healthy cucumber plant, also produced the disease; 5) infected extract retains its virulence even if passed through the Berkefeld filter; 6) aphids contribute

largely to the spread and extension of the disease, as is evident from the experiments carried out with *Aphis gossypii* Glover (" melon aphid ").

927 – **Mosaic Disease in Cucumbers grown under Glass.** — JAGGER J. C., in *Phytopathology*, Vol. 6, No. 2, pp. 148-151. Baltimore, Md., 1916.

The symptoms of the mosaic disease in plants grown under glass are identical with those found in plants growing in the field. With regard to the effects, on the other hand, they are much worse, which fact is no doubt explained by the lower degree of resistance of plants which have developed in an artificial and enclosed environment. A few days after the appearance of the first symptoms the branches wither and die, and sometimes the whole plant dries up. Tests of artificial infection have been made by inoculating varying quantities of sap taken from infected plants into the stalk of healthy cucumbers with a hypodermic syringe. The result was invariably positive. *Aphis gossypii* Glover contributes largely to the spread of the disease, as was shown by numerous experiments carried out by the writer in the vicinity of Rochester, New York. The infected sap of diseased cucumbers inoculated into plants of *Cucurbita* brought about the onset of the disease. Furthermore the plants thus contaminated, in their turn furnished material which produced the same disease in other healthy cucumber plants.

928 – **Sour Scab of Citrus Plants in Florida.** — GROSSENBACHER J. G., in *Phytopathology*, Vol. 6, No. 2, pp. 127-142. Fig. 4. Baltimore, Md., 1916.

The name of " sour scab " is applied to a disease of the leaves, branches and fruits of certain varieties of *Citrus* having a strongly acid sap in their actively growing portions.

*Citrus Aurantium* var. *amara* (sour orange), *C. medica* var. *Lemon* (lemon) and *C. medica* var. *genuina* (citron) are very susceptible to the disease, and the same applies to almost all the commercial varieties of *C. decumana* var. *Pomelo* (grapefruit), except perhaps " Triumph " which appears to be a resistant variety.

The most evident pathological symptoms are the distorted appearance of the leaves and the warty, misshapen fruits. Both on the leaves and on badly diseased fruits, conical elevations with greyish brown tips are found. Some parts of the leaf seem to grow faster than others, which causes the characteristic distortion. As the season advances, the warty protuberances flatten out slightly and become scabby. Finally, if the weather keeps sufficiently hot and moist, *Cladosporium Citri* develops at the infected spots and produces an enormous quantity of brownish-black spores.

The severity of the attack varies greatly from year to year and often from tree to tree. Generally this disease is more frequent in the hot and moist seaboard region than in the pine region, which is more inland and at a greater altitude, where plant growth is slower.

On the other hand, when the weather is cold and wet at the beginning of spring this disease appears even in groves in high-pine land, especially if there has been an excessive use of nitrogenous manure.

Good results may be obtained, however by individual selection of very

late types which might be capable of displacing the phase of maximum receptivity, that is to say, the moment when growth is most rapid and most intense, to a point far ahead in the season, so as to make this phase coincide with a more favourable weather period. The Marsh seedless variety would be well adapted for this purpose. The quality of the host on which *C. decumana* var. *Pomelo* has been grafted also influences the development of the disease. The disease is more frequent in plants grafted on the wild lemon tree than in those grafted on the bitter orange (*C. Aurantium* var. *amara*), which are not so early.

The injury caused every year by this disease to the crop of *C. decumana* var. *Pomelo* in Florida totals $ 50.000, and still greater injury is reported at Cuba, Porto-Rico and the Pine islands.

It is obvious from the foregoing that humidity is one of the most important factors in the development of the disease. When the small leaves begin to open, during the phase of rapid growth of the leaf, numerous small drops of dew form on both surfaces of the leaf during the night, the quantity varying according to the relative humidity of the air. If the latter remains near the dew point, the droplets combine to form one continuous layer of water, which covers the underside of the leaf for several days at a time. If on the other hand the air becomes very dry, the water which has accumulated during the night evaporates during the early hours of the day.

The moisture of the air and the presence of a water film on the leaves form very favourable conditions for the development of the disease. What is the deduction to be made from these circumstances with respect to the origin of the disease ?

It is a well known fact that the acidity of citrus fruits becomes more pronounced in proportion as the humidity of the atmosphere increases and the temperature is lowered. Therefore the question at once suggests itself whether there is not a relation of cause and effect between the development of the disease and excessive acidity due to the wet and cold weather.

| Localities | Materials used | Number of trees Counted | Total Number of fruits | Healthy fruits | | Scabby fruits | |
|---|---|---|---|---|---|---|---|
| | | | | Number | % | Number | % |
| Orlando | Bordeaux mixture. . . | 5 | 1281 | 887 | 69 1/3 | 394 | 30 2/3 |
| » | No treatment. . . . . | 4 | 1262 | 6 | 1/2 | 1256 | 99 1/2 |
| » | Lime-Sulphur. . . . . | 9 | 2371 | 542 | 22 4/5 | 1829 | 77 1/5 |
| Bradentown | Bordeaux mixture. . . | 2 | 628 | 587 | 93 1/2 | 41 | 6 1/2 |
| » | No treatment. . . . . | 4 | 597 | 88 | 14 1/2 | 509 | 85 1/2 |
| » | Lime-Sulphur. . . . | 4 | 1024 | 527 | 51 1/2 | 497 | 48 1/2 |
| » | Soluble sulphur (polysulphide of sodium) . | 4 | 843 | 454 | 53 1/2 | 389 | 46 1/2 |

During their phase of maximum growth, those varieties of *Citrus* which are most subject to the disease emit a strong aroma suggestive of acid. Under normal conditions it is volatilised, but when the leaf is covered with a thin layer of water, it enters into solution and is concentrated to such an extent as to attack the most superficial tissue.

Furthermore, the presence of water on the leaves promotes the growth of the glands. When the latter grow to an excessive extent, their walls are thinned and they often break, the contents being emptied on to the leaves and the rind of the fruit. The edges of these glands afterwards grow to such an extent as to form a crater-shaped hollow, in which the remains of the epidermal cells are found. When on the other hand the growth of the leaf in area predominates, the original injury due to breaking of the gland extends, and exhibits the characteristics of the disease.

The writer has been unable to establish definitely the chemical composition of the glandular content of *C. decumana* var. *Pomelo*. Nevertheless, it is known that the main constituents of orange oil, such as limonene, anthranilic acid and anthranilate of methyl, when applied to the leaves or fruits by means of a sprayer cause serious injuries.

The excessive growth of the oil glands, the injuries due to their bursting, the emergence and accumulation of their contents on the leaves and on the fruits, all of them phenomena which are facilitated by wet weather and cold, appear to be clearly connected with the origin and development of the disease.

The opinion obtaining hitherto, acording to which *Cladosporium Citri* was the specific pathogenic agent, cannot hold good in view of the negative results obtained by the writer during a lengthy series of experiments. On small plants disinfected with bichloride of mercury at a strength of 1 $^{0}/_{00}$ and growing under conditions precluding all possible infection, the disease developed, and on the other hand it was not found possible in any case to cause it by inoculating spores of *Clodosporium* into the tissues of healthy plants.

Various experiments in connection with the application of remedies were carried out in two localities : at Orlando and Bradentown. The results are summarised up in the appended table.

It is advised to apply Bordeaux mixture at the height of the flowering period, following it, after an interval of 8 or 10 days, with an application of lime - sulphur solution and, three weeks later, with a second treatment, again with lime sulphur solution.

## DISEASES DUE TO FUNGI, BACTERIA AND OTHER LOWER PLANTS.

929 – **Contributions to the Study of the Mycology of Liguria, Italy.** — MAFFEI LUIGI in *Atti del R. Istituto botanico dell'Università di Pavia*. IInd Series, Vol. XVI, pp. 225-243. Pl. XVII. Milan, 1916. GENERALITIES.

In this fourth contribution to the study of Ligurian mycology, the writer gives a systematic list of 141 species of fungi of which 85 are recorded for the first time in Liguria.

Among the species determinied and studied by the writer, there are included some already recorded by others during the last few years, and which have been mentioned here in order to facilitate future research into Ligurian mycology.

In addition to the descriptions already recorded (1), the writer figures four species new to science.

The species: *Anthostomella Molleriana* Trav. and Spessa living on the leaf-stalks of *Phoenix canariensis*; *Ascochyta Spiraeae* Kab. and Bub., on the leaves of *Spiraea* sp; *Myxosporium Balmoreanum* Speg. on the rachis of withered leaves of *Kentia* sp.; *Alternaria Dianthi* Stev. et Hall, on *Dianthus*, and some others again are new to Liguria and also to the Italian mycological flora.

The Writer makes critical observations in reference to several species: *Macrophoma calaritana* (Br. et Cav.) Maffei, living on the leaves of *Ceratonia Siliquea; M. Dracaenae-fragrantis* Mori, on the leaves of *Dracaena indivisa* etc.

To the bibliography previously given, 17 other works are now added.

930 – **Phomopsis diploglottidis, Ph. briosii, Coniothyrium hypoglossi** and **Ceuthospora pollaccii,** new Micromycetes discovered in Italy. — MUTTO ELISA., in *Atti del R. Istituto botanico dell'Universita di Pavia*, IInd Series, Vol. XVI, pp. 205-207. Pl. XV. Milan, 1916.

A description of the following new species of micromycetes discovered in the Botanical Garden of the Royal University of Pavia:

1) *Phomopsis diploglottidis* n. sp., causing the appearance of spots at the tip and on the edges of the leaves of *Diploglottis Cunninghamii*;

2) *Ph. Briosii* n. sp., the presence of which produces the formation of spots which encroach on the leaves and leaf-stalks of *Roupala nitida*;

3) *Coniothyrium Hypoglossi* n. sp., which causes spots on the cladodes of *Ruscus Hypoglossum;*

4) *Ceuthospora Pollaccii* n. sp. which grew on a stem of *Chamaedorea elegans.*

931 – **Diseases and Enemies of *Diospyros virginiana* in the United States.** — See No. 872 in this *Bulletin*.

932 – **The Part played by Insects in the Spread of *Bacillus amylovorus*** — STEWART V. B. and LEONARD M. D., in *Phytopathology*, Vol. 6, No. 2, pp. 152-158. Baltimore, Md., 1916.

Experiments with a view to ascertaining whether sucking insects are capable of spreading and inoculating into healthy plants the *Bacillus amylovorus* (Burr.) Trev., with which they may easily become infested when settling on diseased trees.

In the course of these experiments young pear and apple plants were used, enclosed in wire gauze cages. There was spread in abundance on some of these plants (2 or 3 per cage) a culture of *B. amylovorus* in agar. Afterwards, some specimens of the following insects were introduced into each

(1) See *I.* June 1916, No. 701. (*Ed.*)

cage : *Pollenia rudis* Fabricius ; *Empoasca mali* Le Baron ; *Psylla pyricola* Förster ; *Plagiognathus politus* Uhler and *Sapromyza bispina* Loew.

Although the insects were entirely at liberty to go from one plant to the other, the disease was unable in any case to spread from the infected to the healthy plants. This is probably due to the fact that sucking insects are not able to produce lesions of the tissues such as would facilitate penetration of the *Bacillus*.

There are insects which are much more active in this direction, although fairly few in number ; they are : false tarnished plant bug (*Lygus invitus* Say) ; and the apple red bugs (*Heterocordylus malinus* Reuter and *Lygidea mendax* Reuter). The possibility of the bacilli penetrating into the plant through the lesions caused by these insects cannot be dismissed.

933 – **On the Susceptibility of *Phaseolus vulgaris* and *P. multiflorus* to Bean Rust *(Uromyces appendiculatus)* and other Fungoid Diseases.** — LAKON GEORG., in *Zeitschrift für Pflanzenkrankheiten*, Vol. 26, No. 2, pp. 83-97. Stuttgart, 1916. RESISTANT PLANTS

Mycological literature indicates no specific differences between *Phaseolus vulgaris* and *Phaseolus multiflorus* as regards their susceptibility to bean rust. The experiments of the present writer however show that such specific differences do exist. He studied several kinds of beans belonging to these two species, which are grown in his garden, where rust was very prevalent the year before, The plants affected were: 3 varieties of *P. multiflorus*, 3 climbing varieties of *P. vulgaris* and one variety of *P. vulgaris nanus* ; they were so near to each other that the possibility of infection was the same for all the plants.

At the end of the summer when the fungus appeared in consequence of the intense formation of teleutospores, a difference was observed in the susceptibility of the different plants. It was noted that the plants were either strongly attacked by the parasite or else free from fungi. This phenomenon was first of all put down to characteristics inherent in the varieties. More thorough studies showed indeed that *P. vulgaris* was alone attacked, while *P. multiflorus* was quite free. The difference was so great that later on it was possible to distinguish one species from the other merely by the presence or absence of the parasite ; these results were also confirmed by subsequent botanical examination.

These observations were completed with the aid of more abundant material. A large number of kitchen-garden plants at Hohenheim and environs were first of all studied, and it was found that *Phaseolus multiflorus* was exempt, while *P. vulgaris* was always strongly attacked. Attention was next given to a large number of varieties of beans grown in the Botanical Garden of Hohenheim, namely : 7 different kinds of *P. multiflorus* ; 37 different varieties of the climbing form of *P. vulgaris* and 24 different kinds of *P. vulgaris nanus*. A minute study of each of the leaves of all these specimens disclosed the following facts :

1) all the specimens of climbing forms of *P. vulgaris* were strongly attacked and covered with teleutospores of the fungus ;

2) Among the 24 varieties of *P. vulgaris nanus*, 8 had all specimens strongly attacked and 13 had all their individuals free ;

3) All the individuals of the 7 kinds of *P. multiflorus* studied were exempt, with the exception of 2 belonging to 2 different kinds, in which the Author was each time able to find a single leaf slightly attacked.

Therefore these results confirm those obtained in the preceding researches, and it is concluded consequently that *P. multiflorus* is practically resistant to bean rust. Cases nevertheless occur where this species is likewise attacked by *Uromyces*, but they are so rare as to be without importance in practical phytopathology.

These experiments proved that there are differences in regard to rust-resistant powers not only between *P. vulgaris* and *P. multiflorus*, but also between the different varieties of *P. vulgaris*. Consequently the resistance of the different kinds should be determined by cultivation experiments continued over several years. In the literature unfortunately little information is given on this point.

It was not possible to determine the cause of the immunity of *P. multiflorus*. It is well known that rust appears most frequently at the end of summer, that is, at a time when the plant is already partly exhausted. It was concluded from this fact, that resistance to rust is connected with the time at which the exhaustion of the plant takes place. This hypothesis appeared particularly plausible when it was considered that *P. multiflorus* lives longer than *P. vulgaris*. Closer examination however demonstrated that this assumption is without foundation. It was shown that plants of *P. vulgaris* which, owing to their very late plantation, were still in full vigour and provided with young fresh foliage at the end of summer, already contracted rust at this stage of development. Nevertheless, this question should be still further studied by experiments in which the time of exhaustion is accelerated by artificial means.

*Phaseolus multiflorus* not only resists rust better than *P. vulgaris* but is also more resistant to other diseases, above all bean anthracnosis which appears on the pods and is caused by *Gloeosporium Lindemuthianum* Sacc. and Magn. *P. multiflorus* therefore represents a species highly resistant to certain fungal diseases. It therefore deserves to be more extensively grown, the more so as the seed it produces is very good.

934 – **The Selection of Types of Tobacco Resistant to *Thielavia basicola*, in America.** — JOHNSON JAMES, in *Phytopathology*, Vol. 6, No. 2, pp. 167-181, Fig. 6. Baltimore, Md., 1916.

Root rot in tobacco is caused by the fungus *Thielavia basicola* Zopf, which attacks the roots only. Affected plants are characteristically stunted and thus the yield is considerably reduced. Complete destruction of the plant is rare.

The disease remained unknown for a long time, and to the present day it escapes notice in many cases, because the symptoms accompanying it (retarded growth, yellowing of the lower leaves) are in the majority of cases attributed to the advancement of the season or the unfavourable chemical or physical properties of the soil.

All kinds of tobacco are not equally liable to contract the disease (see Table page 1201).

| Varieties | Green weight of 25 plants in uninfected soil | Green weight of 25 plants in infected soil | Relative resistance |
|---|---|---|---|
| | lbs | lbs | per cent |
| « White Burley » | 66.5 | 3.0 | 4.5 |
| « Comstock Spanish » | 59.5 | 20.0 | 33,6 |
| « Connecticut Havana | 45.0 | 20.75 | 46.1 |
| « Kentucky Greenleaf » | 49.75 | 3.0 | 6.0 |
| « Pennsylvania Broadleat » | 82.5 | 14.0 | 16.9 |
| « Brasile Beneventano » | 56.6 | 41.25 | 73.0 |
| « Maryland Broadleaf | 65.0 | 2.5 | 3.8 |
| « Italia Kentucky » | 60.0 | 39.5 | 65.8 |
| « Big Oronoco » | 57,75 | 3.0 | 5.2 |
| « Ohio Seedleat » | 70.5 | 15.25 | 21.6 |
| « Yellow Pryor » | 59.0 | 2.5 | 4.2 |
| « Black Seedleaf » | 84.25 | 23,25 | 27.6 |
| « Halladay Havana » | 58.5 | 33.25 | 56.8 |
| « Gregory's White Burley » | 59.75 | 1.75 | 2.9 |
| « Little Dutch » | 79.50 | 40.0 | 50.3 |
| « Montgomery Seedleaf | 93 50 | 44.0 | 47.0 |
| « Maryland Narrowleaf » | 66.50 | 2.25 | 3.3 |
| « Cuban » | 28.25 | 5.25 | 18.5 |
| « Northern Hybrid » | 65.0 | 45.5 | 70.0 |
| « Golden Spanish » | 50.0 | 25.5 | 51.0 |
| « Silver Leaf » | 56 25 | 31.5 | 56.0 |
| « Page's Comstock | 41.25 | 32.5 | 78.7 |
| « Pease Seed » | 49.0 | 37.25 | 76.0 |

An examination of the table shows clearly that the degree of resistance varies considerably from one type to the other, but unfortunately the most resistant types are also the least used and least appreciated, while the varieties most sought after, "White Burley", "Comstock Spanish" and "Connecticut Havana" are extensively injured by the fungus. In the present article there are set out the results of a series of researches and experiments undertaken with the object of selection from among the best varieties susceptible to the disease the small number of individuals offering some resistance, and which might serve as the basis for a renewal of the seeds.

After having explored a considerable area of plantations, at the Agricultural test Station of Madison, Wisconsin, and at Walker Son's Farms at Walkerville, Ontario, Canada, there were isolated 45 plants of the type "White Burley" and 42 cigar leaf types ("Comstock Spanish", etc.) They

are clearly distinguished from the others by their high degree of resistance to the attacks of *Thielavia basicola*. These plants were covered with hoods to ensure self-pollenation ; they were numbered and noted, and the seeds of each of them were sown separately on special plots.

Type " White Burley ". — The experiments relating to this were undertaken at Ontario. On the plantations of " White Burley, " " mongrels " or " Green Burley " specimens are sometimes met with, which are distinguished by the decided green colour of their leaf-stalks and ribs, which, on the other hand, are whitish in colour in normal plants. The green plants resist the disease better than the others. Some of them being isolated and reproduced in pure lines, were found to be resistant and true to type, while others split up into green and white. It was possible to isolate from the latter, resistant types such as " B 1193 ", the resistance of which in infected soil may exceed one hundred times that of the common " Burey " (relative resistance 42.6 and 0.5 respectively) and " P 701 B " which is not yet fixed, but already promises well.

" Cigar Binder Leaf " Type. — The experiments in relation to this were conducted at Madison. The best types " Comstock Spanish " and " Connecticut Havana " are going more and more out of favour with planters and are replaced by types resistant to *Thielavia*, such as Seedleaf ", " Big Seed ", "Hybrid " (as representatives of these latter types see table ; " Page's Comstock ", " Pease Seed " and " Northern Hybrid " which nevertheless give a product somewhat inferior in quality).

In the plantations of Wisconsin, as already stated, 45 specimens were isolated, the progeny of which were studied and tested during the period 1913-1915. The data collected cannot be used for instituting comparisons, because the infected soil was so fertile that it yielded a crop in excess of that of the sterilised soil. They at any rate show the possibility of obtaining by individual selection, superior types having at the same time a high degree of resistance.

935 – **Resistance of *Pyrus calleryana* to Necrosis of the Bark and Branches (*Bacillus a mylovorus*).** — See No. 870 in this Bulletin.

936 – **Studies on the Resistance of *Prunus* spp. to *Bacterium tumefaciens*.** — SMITH O. CLAYTON., in *Phytopathology*, Vol. 6, No. 2, pp. 186-194, Pl. VI. Baltimore, Md., 1916.

Experiments were undertaken with a view to studying the degree of resistance to *Bacterium tumefaciens* in the different species and varieties of fruit trees of the genus *Prunus*. This bacterium is, as was proved by the researches of ERWIN F. SMITH, the primary cause of the hypertrophied formations on the branches and twigs, which are known under the name of " crown gall " (1).

All the species of *Prunus* are not equally liable to contract this disease, and it must not be considered impossible to find and fix practically immune types which might serve as a basis for a progressive renewal of the orchard,

(1) See *B.* Feb. 1913. No. 185. (*Ed.*).

| Species | Variety or origin | Number of inoculations | Infections | % of infections compared to inoculations | Size of galls mm |
|---|---|---|---|---|---|
| *P. pumila* | 2 varieties | 110 | 0 | 0 | |
| *P. domestica* | « Italian prune » | 140 | 10 | 7 | 1.5– 3 |
| *P. cerasifera* | *P. planteriensis* | 40 | 3 | 7 1/2 | 1.5– 2 |
| *P. domestica* | « German prune » | 240 | 24 | 10 | 1.5–12 |
| *P. insititia* | « Damson » | 120 | 13 | 10 | 3 –12.5 |
| *P. Besseyi* | | 50 | 5 | 10 | 3 –12.5 |
| *P. hortulana* | « Golden Beauty » | 110 | 25 | 22 | 1.5– 3 |
| *P. Amygdalus* | « Bitter Almond » | 100 | 22 | 25 | 3 – 9 |
| *P. domestica* | « Reine Claude » | 90 | 25 | 26 | 1.5–12.5 |
| *P. Armeniaca* | « Mikado » | 40 | 11 | 27 | 1.5– 4.5 |
| *P. angustifolia* | *P. Watsoni* | 50 | 15 | 30 | 1.5– 3 |
| *P. maritima* | « Arnold Arboretum » | 140 | 48 | 34 | 1.5– 3 |
| *P. dasycarpa* | » » | 130 | 55 | 42 | 1.5–12.5 |
| *P. mitis* | » » | 60 | 32 | 53 | 1.5– 3 |
| *P. cerasifera* | » » | 110 | 70 | 63 | 1.5– 6 |
| *P. Munsoniana* | » » | 70 | 48 | 68 | 3 – 4.5 |
| *P. Munsoniana* | Arkansas | 90 | 70 | 77 | 1.5– 9 |
| *P. americana* | « Arnold Arboretum » | 100 | 83 | 83 | 1.5–12.5 |
| *P. hortulana* | » » | 130 | 108 | 83 | 3 –18 |
| *P. insititia* | *P. pendula* | 90 | 77 | 85 | 1.5–18 |
| *P. Davidiana* | | 110 | 96 | 88 | 1.5–18 |
| *P. triflora* | « Burbank » | 120 | 109 | 90 | 12.5–37.5 |
| *P. nigra* | « Arnold Arboretum » | 60 | 56 | 90 | 6 – 9 |
| *P. orthosepala* | » » | 80 | 72 | 90 | 1.5– 3 |
| *P. Mume* | » » | 100 | 91 | 91 | 6 –12.5 |
| *P. Munsoniana* | « Pits Arnolds » | 140 | 130 | 92 | 1.5–37.5 |
| *P. cerasifera* | *P. divaricata* | 100 | 94 | 94 | 3 –18 |
| *P. Persica* | « Elberta » | 130 | 122 | 94 | 6 –18 |
| *P. Armeniaca* | « Royal Apricot » | 120 | 117 | 97 | 6 –25 |
| *P. triflora* | « Arnold Arboretum » | 140 | 137 | 97 | 3 –18 |
| *P. Munsoniana* | El Paso | 100 | 97 | 97 | 6 –12.5 |
| *P. cerasifera* | (shoots and slips) | 120 | 117 | 97 | 6 –37.5 |
| *P. triflora* × *P. Simonii* | | 140 | 138 | 98 | 1.5 18 |
| *P. cerasifera* | (one tree) | 150 | 150 | 100 | 6 –37.5 |
| *P. monticola* | Experim. Stat. of Arizona | 40 | 40 | 100 | 12.5–37.5 |
| *P. Simonii* | « Arnold Arboretum » | 130 | 130 | 100 | 6 –37.5 |

which has now become necessary: 1) owing to the increasing spread of this disease and the extensive damage it occasions: 2) owing to the impossibility of detecting young plants with incipient disease before planting: 3) owing to the persistance of the germs in the soil, which germs later on attack the healthy plants.

The plan adopted in order to determine the degree of resistance to *Bacterium tumefaciens* is to inoculate pure cultures (in standard agar with the addition of 0.5 % of dextrose), at one week's interval, from May till September for the purpose of testing the plant in all phases of growth.

Three lots of bacteria were used: "No. 694" isolated from infected young peach plants; "No. 753" from the galls of an almond tree (14th April 1913); and "No. 790" isolated from an adult peach tree.

The species and varieties of *Prunus* examined were the following: *P. alleghaniensis; P. americana; P. Amygdalus; P. Andersoni; P. Armeniaca; P. Armeniaca* var. *Mikado; P. avium; P. Besseyi; P. caroliniana; P. cerasifera* var. *planteriensis;* different varieties and various types of *P. domestica; P. eriogyna; P. glandulosa; P. hortulana; P. ilicifolia; P. integrifolia; P. Mume; P. Munsoniana; P. nigra; P. orthosepala; P. pennsylvanica; P. Persica; P. platicarpa; P. pumila; P. serotina, P. Simonii* and *P. Watsoni.*

The various degrees of susceptibility are measured by means of the frequency of infestation and the size of the galls, which vary from 5 cm. in diameter to such small dimensions that it is difficult to distinguish them from the surrounding tissue.

In the appended table are found the data arranged in comparative form. For *P. ilicifolia, P. caroliniana* and *P. Amygdalus*, a complete series of observations are wanting. Nevertheless these experiments show that the first two species are highly resistant, almost immune. On the other hand, *P. amygdalus* is highely susceptible.

Of the resistant species therefore the best would be *P. pumila* and the two varieties "Italian prune" and "German prune" of *P. domestica.* Nevertheless *P. pumila* is not adapted for re-stocking owing to its tendency to dwarf the varieties grafted on it. On the other hand, such good results were obtained with the two above varieties of *P. domestica* that it would be advisable to continue experiments in this direction, so as to isolate in the *domestica* group practically immune varieties or types, the possibility of existence of which must not be precluded. *P. hortulana* is considered by many fruit-growers as destined to yield good results specially in the indigenous varieties. The resistance to *Bact. tumefaciens*, is however not considerable, except in the variety "Golden Beauty". In the "Damson" group *P. institutia*, known under the name of *P. pendula*, is rather susceptible; the other kinds, on the contrary, present a high degree of resistance and are certainly capable of supplying good material for further work.

For the peach tree (*P. Persica*), conclusive data are not available. Nevertheless the varieties "Elberta", "Saucer" or "Peento", "Salway", "Lovell" and "Muir" seedlings hitherto examined, did not show resistance,

Fourteen kinds of almond trees (young plants growing at Davis, Cali-

fornia, on the University Farm, were inoculated in 1916, and in all there was an abundant formation of galls. The same results were obtained with *P. Armeniaca*, *P. Armeniaca* var. *Mikado*, *P. Mume* and *P. mandschurica*.

The major part of the varieties and kinds at present preferred in California as basal material for orchards are therefore, in principle, highly liable to contract crown gall; on the other hand, there are types, little known as yet, belonging to different groups and especially to the species *P. domestica* which, if duly controlled and selected, may furnish an excellent renewal stock.

937 - **Prophylaxis in Vegetable Pathology.** — COMES ORAZIO, in *Reale Istituto d'Incoraggiamento di Napoli*, 173 pp. Naples, 1916.

MEANS OF PREVENTION AND CONTROL

The writer points out that though it is still absolutely necessary to resort to therapeutic means whenever the plant is ailing or attacked by parasites, it would be desirable, on the other hand, to take into account what has long been practised in animal pathology. In animals, the extension of the action of hygiene limits the sphere of therapeutics in a greater degree day by day, and in the same way, by more rational attention and more appropriate measures, the cultivated plant must be made stronger, and more capable of resisting the attacks of its enemies; in other words, greater attention must be devoted to the hygiene of the plant.

Yet it must not be forgotten that sensitiveness to bad weather and receptivity to parasites vary in plants with age, methods of cultivation, and the environment in which they are grown. Furthermore, ordinary practice shows that the resistance to adverse agencies varies in cultivated plants with the different races, and, in the same race, with the individual. It follows that on the whole, the resistance is rather individual than specific. In view also of the remarkable influence of the environment and methods of cultivation on the plant, it must be expected that this influence will be clearly reflected in the capacity of resistance of the plant, even if the latter be modified so as to render receptive plants considered as immune, and also to cause fungi considered as inoffensive or at least as semi-parasitic to become injurious.

On the other hand, from the biological point of view, it cannot be maintained that there are absolutely immune races; nevertheless, such steps may be taken as to ensure that their resistance to adverse factors should not be reduced so as to jeopardise their productivity. This object might be obtained by hygiene and prophylaxis. The latter alone could little by little lead to the abolition of the empirical methods which still predominate; by guiding vegetable pathology once for all along a rational path, it will result in rendering intensive agriculture more economical, in spite of the evergrowing delicacy of its products.

Such is the theory maintained by the writer, and the object of his article. He reviews an extensive series of observations and researches collected from the literature on the subject.

His work is divided into two parts; in the first he deals with plant susceptibility to disease, and in the second with resistance.

As regards the susceptibility, the influence of the climate, soil, cultiva-

tion methods, and nitrogenous manure are dealt with in particular. The conclusions are as follows:

*Climate.* — 1) A plant cultivated in a climate differing from that of its origin, retains and may even increase its resistance to adverse agencies if introduced into a colder climate; on the contrary, it loses this resistance in an ever greater degree if introduced into a hotter climate.

2) The necessity of adapting itself to the new climate, even if the difference from that of origin is small, produces variation in the physiological processes of the imported plant; it inevitably entails a greater variation in the quantity than in the quality of the organic substances it produces, and consequently of those also which furnish the plant with the necessary means for resisting the attacks of its enemies.

3) The variations in the cell sap produced by a colder or a hotter environment are reproduced in analogous fashion in plants cultivated with a colder (northern) exposure or hotter (southern) exposure respectively.

4) These variations form a local problem as regards the selection of the most resistant varieties.

5) The plants imported into hotter and moister, and into wetter localities always become more sentitive to disease, and in particular to the attacks of parasitic micromycetes. The same is the case in exclusively rainy years during the growth of the plant.

6) Repeated and conclusive examples exist of the fact that plants imported into hotter climates than those of their origin gradually lose their original resistance to adverse factors, as in the case of wheat with regard to rusts, the vine with regard to oidium, mildew and phylloxera, and generally, kitchen garden and fruit plants in relation to their respective parasites.

7) Comparisons between the behaviour of plants in different climates can only have a conclusive value in those cases where all the conditions of cultivation of the several plants are alike; otherwise, the conclusions will be false or at any rate arbitrary.

*Soil.* — 1) The soil water having even a slightly acid reaction more effectively facilitates the growth of the plants cultivated therein.

2) Soils with an alkaline reaction, on the contrary, facilitate the phenomena of drying up of the leaves in oats, of scurf in the potato, or " foot-rot " in wheat, chlorosis in American vines, and so on.

3) Limestone soils cause a greater production of sugar in plants, and at the same time are an obstacle to the presence of free organic acids.

4) The addition of alkaline substances to the soil renders plants more sensitive to injurious external influences; acid fertilisers and manures have a contrary effect.

5) The resistance of plants to adverse factors is greater in loose soils and less in compact soils.

6) Stagnant subsoil waters, owing to their gradual impoverishment in dissolved oxygen, cause asphyxia of the roots, which is followed by necrosis of the tissues, and afterwards by the appearance of mycelia (rhizomorphs, *Rhizoctonia*, etc.).

7) The hardiness of wild plants is due not only to the greater den-

sity of their tissues in consequence of the shortage of available nitrogenous substances in the compact soil, but also, and in a still greater degree, to the acidity of their cell juices, owing to the incomplete combustion of the carbohydrates chiefly contained in the roots, the air circulation being difficult and sometimes interrupted in compact and uncultivated soil.

*Cultivation.* — 1) By cultivation man has rendered edible the organs of wild plants which are to-day replaced by their cultivated varieties.

2) Assiduous, intense and even forced cultivation results in inducing an enlargement of the organs of the wild plant, and also renders them succulent in consequence of the increase of volume in the anatomic elements as compared with the cellular tissue, as well as by the continually greater diminution of their walls, until the elements of the sclerenchyma are seen almost to disappear.

3) By progress in the improvement of a plant, its sensitiveness to adverse causes is also increased.

4) The development of a parasitic infection is always related to the medium (environment in which it develops) which is offered by the tissues of the plants attacked ; the result is that, all other conditions being equal, the infection increases with the improvement gained by the plant.

5) Conversely, for fruit plants, seed reproduction habitually produces a retrogression in the improvement obtained ; the same retrogression is brought about by the absence of cultivation ; the products, which in both cases are marred in quality, certainly run less risk of disease than similar plants, but improved.

*Nitrogenous Manure.* — 1) Manuring with suitable manure renders the tissues more juicy and consequently more sensitive to bad weather ; they are also richer in sugar, and consequently more attractive to animal and vegetable parasites.

2) The richer a soil is in nitrogen, the shorter the period of time elapsing between inoculation and infection with a vegetable parasite ; there is also an increase in the receptivity of cultivated plants to parasites of every kind. An abundant nitrogenous manure, in whatever form given, always produces the same effects.

3) Nitrate of soda, which calls forth greater productivity of the plant, on the other hand renders it much more tender, and consequently more sensitive to the bad effects of adverse factors.

4) Excessive nitrogenous manure prolongs the growing period of plants and retards lignification ; consequently the foliage will be more sensitive to winter cold, with a loss in the new production and risk of loss of sap and gum.

In the 2nd part of the work on plant resistance to disease, the writer examines the following questions in succession : the resistance of the plant organs; the chemistry of the tissues; the acidity of the sap and oxydases ; the acidity of the sap and plant parasites; the acidity of the sap and animal parasites ; tannic substances and parasites ; selection crossing and high grafting ; manures.

The conclusions are as follows :

*Resistance of the Organs.* — 1) The organs of wild plants have more compact, i. e. less watery, tissues, and more acid, *i. e.* less sweet, juice than the organs of the corresponding plants of cultivated species.

2) More resistance is offered : (*a*) to rusts, by the varieties of wheat with narrower and more waxy leaves (yellowish in colour), such as those in the hottest and driest regions ; (*b*) to smuts, by those varieties of wheat which are bearded, the loss of the beard being a sign of improvement ; (*c*) to lodging, by those varieties of wheat which, like the Noè, have the solid part of the culm more fully developed ; (*d*) to diseases, by those varieties of potato which have hardy and straight stalks, leaves small and downy, and the tubers covered with a coarse skin ; (*e*) to diseases, by those varieties of olive tree which have smaller olives and a less developed mesocarp together with a more compact wood : (*f*) to diseases, by citrus plants obtained by sowing rather than those obtained by non-sexual reproduction ; (*g*) to diseases in general, by those plants which present morphological characters similar to those of hot and dry regions, non-fatty xerophytic plants.

*Chemiotaxy of the Tissues.* — 1) Whilst the resistance is different in the different races or varieties of the same species bred under like conditions, no characteristic anatomical difference was found in their tissues by which the different resistance to diseases could be explained.

2) Any variation in the environment or in the methods of cultivation produces a modification in the strength of resistance, so as to render susceptible even those races which had previously been regarded as refractory.

3) Both resistance and susceptibility are individual and inherent characters rather than race characters.

4) The substance endowed with positive chemiotropism is formed by the sugars and starches, but more particularly by the former than by the latter.

*Acidity of Sap and Oxydases.* — 1) in a given organ, other conditions being equal, the receptivity to parasites increases with the quantity of reducing sugars ; and on the other hand, resistance increases with the organic acids.

2) In the cell sap the reducing sugars increase as the organic acids diminish and vice-versa.

3) Those organic acids which, during the night, serve to excite the zymotic processes calculated to promote the migration into the leaves of the organic materials produced photosynthetically, are on the contrary transformed during the day, partly at least, into food substances, i e. carbohyrates.

4) The organs (branches and fruits) which present a stronger resistance to the attacks of parasites are the youngest organs, above all when in the period of growth and more acid.

5) The organic acids help to provide growing organs with that turgidity which is necessary in order to promote the zymotic processes which, by mobilising the stored materials, are to supply sufficient nourish-

ment to the growing organs; they contribute to this by absorbing and retaining the water in circulation.

6) In alkaline soils, such as limestone soils, and those irrigated with alkaline water, cultivated plants present a lesser quantity of free acid in their tissues and are more sensitive to adverse factors.

7) Oxydases are more abundant in the more juicy tissues and in those diseased organs which are richest in nitrogenous substances; they are most active in the hottest regions, where also the organic acids contained in the plants burn up; this combustion produces $CO_2$. which is eliminated, thus depriving the plant of the acidity required to render it resistant. For this reason, in hotter regions, other conditions being equal, the plant is more sensitive than in less hot regions. In proportion as the acidity of the juices in the organs diminishes, their sweet taste will become more evident, and the parasites will find them a more agreeable and more abundant food for their growth.

*Acidity of Sap and Plant Parasites.* — 1) Organic acids are poisonous to micromycetes.

2) The greater acidity of the sap produces a greater resistance in plants as follows : (*a*) wheat to rusts; (*b*) wine stocks to oidium, mildew and " tuberculosis " . (*c*) the olive to *Cycloconium* and *Stictis Panizzei* ; (*d*) the the pink, potato and hyacinth to bacterial infection ; (*e*) fruit plants in general to root rot and gummosis.

3) Pruning, by rejuvenating the branches and foliage of fruit trees, increases the resistance to adverse agencies.

*Acidity of Sap and Animal Parasites.* — 1) As the increase of the quantity of reducing sugars (very much sought after by insects) in an organ is attended by a reduction in the organic acids and *vice versa*, it follows that acidity is the weapon most used by the plant against animal parasites likewise. Among acids, however, the most poisonous appears to be malic acid.

2) The greater acidity of the vegetable juices presents a defence in the following cases : (*a*) the young branches of the white mulberry from *Diaspis pentagona* ; (*b*) the young citrus plants from *Pseudococcus citri* ; (*c*) citrus plants from *Crysomphalus dictyospermi;* (*d*) improved young fig trees and those obtained from seed, from *Ceroplastes rusci* ; (*e*) young olive trees from *Saissetia oleae* and *Philippia oleae*; (*f*) ordinary and citrus fruits, from attack by scale insects ; (*g*) olive trees, from the " fly "(*Dacus oleae*) ; (*h*) the grape, from *Albinia Wockiana* ; (*i*) vines, from phylloxera.

*Tannic Substances and Parasites.* — 1) Tannins, which are acid substances, behave like organic acids, and that is why they abound in growing organs, defending the latter against the attack of parasites, especially vegetable parasites.

2) In artificial nutrient media, the presence of tannin added in different proportions prevents the germination of the spores or else it stops the growth of the mycelium. In this case, tannin clearly causes a more effective antifungal action of the wall of the cell itself.

3) Antocyanine, as a substance derived from bodies (tannins) endowed with a relatively high osmotic power, contributed, like tannic sub-

stances, to increasing the resistance of plant organs against their parasites. For this reason, the varieties or races of fruits or grapes which are intense in colour, from red to violet and bluish, are always more resistant in comparison with varieties of the same species with more or less pale fruits.

4) The tannins co-operate with the other organic acids in defending the organs of the plants even against their animal parasites ; hence the pure or hybrid American races of vines, richer in tannic acid, are always more resistant to phylloxera, other conditions being equal.

*Selection, Crossing and High Grafting.* — 1) The resistance to adverse factors varies in the same environment, just as to the variety and the races of one and the same cultivated species. This resistance being inherited, it is essential to maintain it by renewed selection, the value of which is almost exclusively local.

2) Resistance is greater in the varieties usually held in least esteem ; in this case, when selection seems insufficient, it is indispensable to resort to hybridisation, especially for grasses, and to a high grafting on hardy stocks for fruit plants, unless reproduction by seed is resorted to.

3) With similar processes there have also been produced resistant races : (*a*) of wheat to rust, smut and lodging ; (*b*) of buckwheat, sugar cane and stone fruit Rosaceae, to heavy frosts ; (*c*) of asparagus to rust ; (*d*) of tomatoes, cotton tree and water melons, to wilt ; (*e*) of potato, to mildew ; (*f*) of strawberries, to mould; (*g*) of vines, to oidium, mildew and phylloxera; (*h*) of citrus plants, to gummosis and root rot.

*Manuring.* — 1) Potassium, lime, iron and magnesium must be applied to the plants in the form of sulphate exclusively ; the separation of the corresponding ions, which is done by the roots, would set at liberty the sulphuric acid, which, even in a very small quantity, would, by recombination, increase the acidity of the juice circulating in the organs of the plants and render resistance stronger.

2) Nitrate of soda is the nitrogenous manure which, more than any other, tends to reduce the acidity of the organs and render them more sensitive to enemy action ; sulphate of ammonia, on the contrary, causes a production which is somewhat less in quantity but renders the plants more resistant, because it tends to increase the acidity of their organs; in alkaline soils, the use of nitrate of soda will, by accumulating sodium, result in diminishing the original fertility and will produce progressive sterility.

3) An excess of nitrogenous manure, especially in the nitric form, causes an increase in the formation of starchy products which, like sugars, render the organs more susceptible to parasites. On the contrary, phosphatic manure produces a transformation of the soluble nitrogenous substances (or starchy substances) into insoluble nitrogenous substances (or phosphoproteins) which possess a negative chemotropism. This manure, while it accelerates the ripening of the fruit and lignification of the branches tends to protect them from the attacks of external agents and at the same time contributes to maintaining or increasing the acidity in the organs, thus strengthening them in their struggle against parasites.

4) In order as far as possible to ward off attacks on cultivated plants produced by physical agents and parasites, prophylaxis must be based on phosphatic manure, more or less assisted by an addition of sulphates.

938 - **Means of Control of *Chrysophlyctis endobiotica*, a Potato Pest in Germany.** — SCHAFFNIT E. and VOSS G., in *Zeitschrift fur Pflanzenkrankheiten*, Vol. 26, No. 3-4, pp. 183-192. Stuttgart, June 1, 1916.

I. — *Experiments in Soil Disinfection.* — The experiments were carried out on fields over-run by the parasite, at Nederpleis, with a series of chemicals in different degrees of concentration. The disinfection of the soil was done between the 10th and 20th February, the plantation of tubers on the 25th April and the harvesting of the potatoes on the 29th October, Each plot had an area of about 7 sq. yds. The means of disinfection were: " Beta-Lysol ", sodium cyanide, chromium acid carbonate, " Flurasil ", kainit, calcium cyanamide, sulphur and " Uspulun ".

The kainit, calcium cyanamide and sulphur, as well as the mixtures of these materials, were first spread and then hoed in ; the " Beta-Lysol ", sodium cyanide, chromium acid carbonate, " Flurasil " and " Uspulun " were used in aqueus solutions. " Uspulun " is a preparation of mercury soluble in water : " Flurasil " is a compound of silica, fluorine and zinc. Both the products are prepared in Germany. Each experiments was repeated three times on plots situated at different points.

The results of the experiments, which are summed up in a table, show that none of the agents gives satisfaction in every respect. The best effect was obtained with chromium acid carbonate, which, on the plots treated, gave 3.94% of diseased tubers, and 11.59 % of stalks and leaves infested. Next come the plots which received a mixture of kainit and a large quantity of calcium cyanamide with 7.65 % of tubers attacked and 21.37 % of diseased leaves. The third place is occupied by plots which received sulphur or " Flurasil " ; the first of these had 10.14 % of diseased tubers and 31.81 % of leaf parts attacked, and the second 8.64 % of diseased tubers and 33.63 % of stalks and leaves attacked. The other means of control " Uspulun " (even in large doses), sodium cyanide and kainit produced no effect.

If the soil is not uniformly and equally reachedt hroughout its parts, the experiments rarely give a good result. Owing to this fact, the tubers on certain plots treated were more infected than those of the check plots. This year it is hoped that the drawback in question has been avoided by careful distribution of the plots over the soil at the time of autumn tillage.

To sum up, it may be stated that the disinfection of the soil appears to be successful in some respects, and for this reason the writers will repeat their experiments for several years.

II. — *Behaviour of the different varieties of Potato towards the disease* — 69 varieties were tested. Each plot had an area of about 4.5sq. yds. The potatoes were planted from the 25th April to the 30th May, and lifted from the 6th to the 30th October following.

The results showed that the following varieties remained immune from the disease : " Jubelkartoffel ", " Pulsens Juli ", " Rote Delikatess-Niere " " Reingold ", " Roma ", " Blaue Rheinische Rauhschale ", " Verbesser-

ter Tannenzapfen", "Vater Rhein" and "Wohlgeschmack". Part of the varieties were slightly attacked and part strongly (more than 50 % of the tubers). The soil of the plots was no doubt less infected by the parasite than that of the plots used for the disinfection tests. This year, the experiments will be repeated on a larger scale with those kinds which were found immune in 1915.

III. — *Vitality of the dormant spores of the fungus in the soil when the host is not cultivated thereon.* — Previous observations have shown that the dormant spores of *Chrysophlyctis endobiotica* Schilb. retain their germination capacity in the soil for 6 years. By way of checking this observation, the Writers acquired from the town of Kronenberg a field which was greatly over-run by the parasite, and which for that reason had not been cultivated from the end of the 1907 growing period till the spring of 1915. Two plots of the field were ploughed, situate at two separate points, and in the 15th April 1915 they were planted with the "Industrie" potato variety. On gathering the crop, a very strong infection was found on both plots. It clearly follows from this that the dormant spores may retain their vitality in the soil for 7 years. This year other plots in the field will be planted with potatoes, and the operation will be repeated subsequently in order to determine the time the dormant spores retain their vitality.

For practical agricultural purposes, it follows from these experiments that fields invaded by the parasite should not be put down to potatoes before the expiry of a period of 7-8 years, and it is even probable that the vitality of the parasite lasts still longer.

DISEASES OF VARIOUS CROPS

939 - ***Phytophthora* sp. Injurious to Oats in America.** — Mc MURPHY JAMES, in *Science*, New Series, Vol. XLIII, No. IV, p. 534. Lancaster, Pa., 1916.

Specimens of oats attacked by an unidentified species of *Phytophthora* were discovered in the vicinity of the University of Stanford and near Mayfield in California. Symptoms of the disease: spots and stripes of different sizes along the edges, or a long stripe running along the central line of the leaf. The parts attacked are first yellow, then whitish (when the conidia are abundant); finally they become brown, dry and break up.

The conidiophores, which are short and simple, emerge through the opening of the stomata and generally carry a single conidium. Chlamydospores and oospores were likewise found in abundance on the infested parts.

In regard to these characters, this *Phytophthora* approximates to *P. Colocasiae* a parasite of "taro" (*Colocasia esculenta*), in Java, India and Formosa.

940 - **Potato Diseases in the Dutch East Indies.** — WESTERDIJK J., in *Teysmannia*, XVIIIth Year, Ist and IInd Parts, pp. 1-15, I Pl. Batavia, 1916.

The Writer was able, during his stay in the Dutch East Indies, to study the cultivation of potatoes in Java, where it is carried on in the mountains, at an altitude of 1300 to 6500 feet.

While the few European growers devote all the necessary care to this cultivation, the natives use seed potatoes, too small in size to be of any value

for consumption, for this purpose. In addition, they are sown too close in the potato fields, and the soil is insufficiently tilled and manured. They grow a variety of mediocre quality, but which is somewhat resistant to disease.

A description is given of the enemies observed on the potato. *Epilachna territa* largely destroys the foliage by gnawing it. *Phytophthora infestans* has been found in some plantations lying at an altitude of 5500 to 6500 feet; the climatic conditions hardly appear favourable for a spread of this disease in regions of a lesser altitude. *Macrosporium solani* causes a dry rot of the foliage, and has been found at an altitude below 5500 feet. A root fungus, the attacks of which are somewhat dangerous to other crops, sometimes assails potatoes. A disease, the cause of which is still unknown and which is shown by the leaves rolling up, is rather frequent in some newly imported varieties. Finally, considerable damage is caused by the disease known in Germany as "Eisenfleckigkeit". The diseased tubers do not differ externally in any way from the healthy ones. On cutting them open, brown spots are seen in the central tissues. These spots turn black when the potatoes are cooked. It has not been possible to find any very definite cause giving rise to this disease. Probably defects in the methods of cultivation, especially with the natives, very much influence its appearance, and an improvement will be observable when the usual methods are replaced by more rational ones.

941 - ***Cronartium ribicola* attacking *Ribes*, in Ontario.** — HOWITT F. E. and MC CUBBIN W. A., in *Phytopathology*, Vol. 6, No. 2, pp. 182-185. Baltimore, Md., 1916.

In 1914 and 1915, in nine counties on the banks of the great Ontario lake, plantations of *Ribes* especially *R. nigrum* L. were considerably damaged by *Cronartium ribicola* Fisch. de Waldh.

The following cultivated and wild species were attacked: *R. nigrum*, L.; *R. vulgare* Lam.; *R. grossularia* L.; *R. aureum* Pursh; *R. cynosbati* L.; *R. triste* Ball.; *E. floridum* L'Hér.; and *R. prostratum* L'Hér.

The aecidial form (*Peridermium*) is found on *Pinus strobus*, both native and imported, in the countries of Brant, Durham, Halton, Welland, Wellington and Wentworth.

In the spring, the infection spreads from the pine to the *Ribes* on which the teleutospore develops. It is, however, not impossible, although the experiments undertaken by the Writer yielded a negative result, that the disease may winter on the leaves of *Ribes* itself. As regards the susceptibility of the different species, *R. nigrum* is said to be the most susceptible. On the other hand, *R. rubrum* is thought to be much less so (the variety "London red" is entirly refractory) as also is *R. grossularia*.

It should be noted that this disease, which may be said to have no economic importance in Europe, may occasion extensive havoc in Ontario, owing to almost complete defoliation. With regard to the means of control, good results are obtained by applications of Bordeaux mixture or soluble sulphides for fifteen days during the summer.

942 – ***Sclerotinia libertiana*, injurious to *Forsythia viridissima*.** — PEGLION VITTORIO, in *Rendiconti delle sedute della Reale Accademia dei Lincei, Classe di Scienze fisiche, matematiche e naturali*, 5th Series, Vol. XXV, 1st Half Year, Part 6, pp. 665-657. Rome, May 7, 1916.

As early as the spring of 1915 the Writer, in some specimens of *Forsythia viridissima* in the garden of the School of Agriculture of Bologna (Italy), observed a withering of the shoots after flowering. An anatomical study of the lesions disclosed a limited but very pronounced disorganisation of the bark, and the presence of small black isolated sclerotia, mostly placed at the point of intersection of the leaf stem on the twig. According to the writer, the fungus is *Sclerotinia Libertiana*. If fragments of bark tissue are sown in nutrient gelatine, or if the withered shoots are placed in a moist room, there follows within a very short time a vigorous growth of mycelium and the differentiation of many large sclerotia.

The origin of this infection is to be sought during the flowering of the host. The flowers attacked adhere strongly to the stalk. On making a longitudinal section of these flowers, they are seen to be the seat of an extensive mycelial infection. The mycelium of *Sclerotinia* starts from the stigma and, passing along the style, enters the ovary, from which, traversing the leaf-stalk, it spreads in the cortical zone of the twig.

What here takes place is a mumnification perfectly analogous to that produced by several species of *Sclerotinia* of the sub-genus *Stromatinia* in the female organs of various Rosaceae, and which, as is well known, are caused by the germination of ascospores or conidia (*Monilia*) on the stigma, followed by the penetration of the mycelium into the ovary, and from the latter into the branches.

The infection takes place when the vitality of the flower is already on the decline, because the germinal tube of the ascospores of *Scl. Libertiana* cannot develop in healthy vegetable tissues in full vitality. The infection is probably due to ascospores carried by the wind. The ascospores can germinate as soon as they are expelled from the ascus. In the cases reported by the writer they came from a plot cultivated with Jerusalem artichokes, where *S. Libertiana* is endemic.

Thus *S. Libertiana*, the pathogenic position of which was known in the typical forms of infection arising from injuries to the host (the writer is of opinion that it is anormal case of " chancre " or " Sclerotia disease " in hemp), from lesions following upon cold (as is the case with the Sclerotia disease of beans), is found to possess other means of penetration into its host, characterised by a more and more reduced period of life in the saprophytic stage. Such is the special form of the Sclerotia disease in the bean, described by PETRI (*Rendiconti della R. Accademia dei Lincei*, Nov. 20, 1914), in which the saprophytic stage develops at the expense of fragments of petals adhering by chance to the growing shoots, and finally the pathological process now in question which arises on the flowers of *Forsythia* and causes considerable injury to the stem of the host.

943 - ***Trichoderma koeningi*** **causing Root Rot of the Apple Tree, in Virginia.** — CRABILL C. H. in *Phytopathology*, Vol. 6, No. 2, pp. 159-161, Fig. 1, Baltimore, Md., 1916.

In Virginia, rotting of the roots of the apple tree occurs chiefly in the valley of Shenandoah and the district of Piedmont. It is responsible for very heavy damage, and nothing has up to now been done to control it. Trees from ten to fifteen years old are usually attacked. The pathological process is rapid and fatal. The first visible symptom of the disease is a stoppage of growth, followed by the partial falling of the leaves and the withering of the terminal buds. At the moment when these symptoms appear, the root system is already dead, the roots are cracked and fragile, and the tissues invaded by an abundant growth of mycelium. Infection begins with the deepest roots and progresses upwards.

The following facts have been ascertained : 1) the rot is more frequent in land cultivated for the first time, especially if it contains some decomposing vegetable residue such as tree stumps; it is rarer in localities already cultivated for some years ; 2) the rot is equally widespread in all types of soil, both on steeply inclined slopes and in plains and depressions ; 3) in orchards, several trees forming a group die at almost the same time, which is a proof of the rapidity whith which the disease spreads ; 4) " York Imperial " is said to be the variety most liable to attack ; next follow : " Stayman Winesap ", " Ben Davis ", " Yellow Newton " (" Albemarle Pippin ") and " Arkansas " (" Black Twig ").

The writer obtained many cultures from infected material of different origin, and in all cases obtained abundant growth and fructification of *Trichoderma koeningi* Oudemans.

| Place of origin of infected material | Number of cultures | *Trichoderma* | *Hydnum* | Bacterial Infection | Sterile |
|---|---|---|---|---|---|
| Middletown . . . . . | 14 | 14 | — | — | — |
| Middletown . . . . . | 10 | 1 | 7 | — | 2 |
| Roselands . . . . . | 10 | 6 | — | — | 4 |
| Pleasant Valley . . . . . | 26 | 12 | — | 11 | 1 |
| Fishersville . . . . . | 24 | 16 | — | 5 | 3 |
| Greenwood . . . . . | 16 | 14 | — | 2 | — |
| Greenwood . . . . . | 16 | 9 | — | 5 | 2 |
| Totals . . . | 116 | 72 | 7 | 23 | 12 |

*Trichoderma* may be regarded as the specific cause of root rot. Other fungi however may be associated with it, for instance *Hydnum* and a bacterial flora which is sometimes very abundant.

The growth of *Trichoderma* in starch agar, at ordinary temperatures, averages 1 cm. per 15 hours; hence the rapidity of the pathological process, which may bring about the death of the tree within a few days. The parasite grows equally well in any medium provided the latter does not contain an excess of alkali.

Copper sulphate in a dose of 0.1 % added to the agar stimulates the formation of spores. A soil rich in humus and well manured promotes the growth of the mycelium and the formation of the spores. The vegetative body of the fungus is found in all the elements of the xylem, from which it spreads into and between the cells. It cuts off light from them entirely and encroaches on and destroys the walls.

Its property of living quite easily as a saphrophyte, and the large number of spores which the wind scatters with extreme facility, render this parasite one of the most dangerous to the orchard, and it is necessary to take prompt and energetic control measures.

## WEEDS AND PARASITIC FLOWERING PLANTS.

944 - ***Cryptostemma calendulaceum, Crepis capillaris, Leonotodn hirtus* and *Carduus* spp., Weeds in New Zealand** (1). — ATKINSON E. H. in *The Journal of Agriculture*, Vol. XII, No. 1, pp. 32-39. Fig. 9; No. 3, pp. 175-187. Fig. 6. Wellington, 1916.

1. The Writer continues the description of the common weeds in New Zealand by describing *Cryptostemma calendulaceum* (capeweed), *Crepis capillaris* (hawkweed) and *Leontodon hirtus* (hawkbit).

The first of these Compositae is very common in the Northern island. Is has likewise been reported in numerous localities in the Southern island, where it tends to invade the pastures, choking and replacing the leguminosae and grasses best adapted for cattle feeding.

The two other species also occur very widely, but they should be rather considered as useless than injurious.

2. Description of 6 species of *Carduus* growing more or less frequently in New Zealand : *C. lanceolatus* (spear thistle) ; *C. nutans* (nodding thistle) ; *C. pycnocephalus* (winged thistle) ; *C. arvensis* (Californian thistle) ; *C. Marianus* (milk thistle) and *C. eriophorus* (woolly-headed thistle).

*C. lanceolatus* is certainly the species most widely distributed in the two islands. This species is the one which imparts its characteristic appearance to the meadow flora when vegetation grows after bush fires. *C. arvensis* is also very common. *C. pycnocephalus* is much rarer; in certain sterile and bare parts it often forms the sole winter forage for sheep. *C. Marianus* abounds in several localities, but tends to disappear with the development of cultivation. *C. eriophorus* only occurs along the rivers and in the valleys of Wairarapa and Otaki. Finaly, *C. nutans* has been reported in southern Canterbury and some localities of Otago.

(1) See *B.* March 1916, No. 363. (*Ed.*)

## INJURIOUS INSECTS AND OTHER LOWER ANIMALS.

945 - **Contribution to the Life History and Anatomy of *Lyda hypiotrophica* (= *Cephaleia abietis*)** (1). — SCHEIDTER FRANZ, in *Zeitschrift für angewandte Entomologie*, Vol. 3, No. 1, pp. 97-116. Berlin, March 1916. GENERAL

*Development of the eyes.* — During an outbreak of *Lyda hypotrophica* in the course of the last few years in Swabia and Upper Franconia, the Author, at different periods of the year (October, March-May) studied a large number of larvae. He first classified the larvae according to their colour and then counted them. He thus determined three groups of larvae clearly distinguished from each other.

The larvae of the first group, apart from the dark brown X on the forehead, had a head uniformly greenish brown or light brown in colour. Those of the second group are distinguished by an ill-defined dark brown spot on the cheeks. The larvae of the third group had an oval deep black spot just above the eyes (eye spot). The larvae of the last group might also exhibit a spot on the cheeks. The study made by the writer proved that the oval spots of the larvae in the third group are nothing else than the future eyes of the pupa and the adult.

The writer calls them " pupal eyes ". They are found in all the larvae which undergo transformation into pupae in the following spring.

Wishing to study the question more fully the writer examined a number of larvae of the first two groups mentioned above from the point of view of the genital organs. He found that in larvae which in the spring had not yet got pupal eyes, the genital organs had not yet developed. On the other hand the larvae having " pupal eyes " all had well developed sexual organs in March and April.

At what time of the year do the pupal eyes appear ? The larvae ready for pupation already possessed them in March ; on those which were without these eyes and which were enclosed in a cage they were not seen to appear after that time, that is, after the end of March. In some cases (17 larvae out of 9000 larvae studied) the " pupal eyes " were already observed in October.

The writer concludes that the pupal eyes do not always form in autumn in the larvae which pupate in the following spring.

The larvae which already showed the pupal eyes in October had well developed genital organs, but the development was not so far advanced as in the larvae studied in March and April.

In practice, it is important to be able to ascertain as early as March, on the basis of the " pupal eyes ", whether or not there will be a large number of adult insects in the spring.

*Number of eggs.* — The writer also studied the number of eggs which a female can lay ; he found that the indications given on this subject by the literature (maximum of 25) are inaccurate.

(1) See *B.* July 1916. No. 839. (*Ed.*).

These investigations, which are not yet terminated, appear however to have shown that this figure is too low. It is quite possible for a female to lay up to 100 eggs.

*Development of the genital organs* — The investigations carried out show that the larvae of *Lyda* ready for pupation already possess well developed sexual organs while in other insects, *e.g.* the lepidoptera, the ovaries are still little developed even in the last larval stage. The genital organs form during the summer and autumn, at the same time as the " pupal eyes ", but the Author does not think that there is any relation between the formation of these two organs. The testicles develop more rapidly than the ovaries. A very detailed description is given of the genital organs and the formation of the eggs.

The freshly emerged female, after mating, lays in the first oviposition about 30 eggs ; later on, when the weather is hot, it lays more. Oviposition is complete at the end of 7 days. If it is rapid and intense the adult dies after 8 days of life. The arrival at maturity and oviposition are closely related to the weather ; hot weather promoted them, bad weather hinders them. If bad weather is sufficiently prolonged the females die before ovipositing, and the consequence frequently is a rapid diminuton of the insects in the forest.

*Colour of the larvae.* — Generally green larvae and yellow larvae are distinguished, but there are also all kinds of shades between these two groups. Among the larvae studied in 1913, 88 % were green and 12 % yellow. The hypothesis that the green larva is male and the yellow female was not confirmed by the present investigations. The colour is not changed until the larva has pupated.

It is likewise not true that the yellow larvae are individuals covered with parasites. The difference in the colour results from the blood of the larvae.

*Parasites.* — *L. hypotrophica* appears to suffer little from parasites ; no parasites are known to attack the eggs, pupae or adults. On the other hand the larva is attacked by some species of Ichneumonidae and Diptera, but not to a great degree.

The larva of Ichneumonidae found by the writer in the larva of *Lyda* in October and spring, were still very small : 3-4 mm. Later, in the month of March, they were 6 mm. On being placed in a hot room they developed more rapidly, and produced adults within a few weeks.

The larvae of Ichneumonidae completely absorb the larvae of *Lyda* so that after a time nothing remains but the empty skin. They afterwards leave their hosts in order to pupate.

The Tachinid larvae living in the larvae of *Lyda* are more developed than the Ichneumonid larvae. They were already completely developed in October and entirely filled out the *Lyda* larvae.

They would remain therein during the winter and would only pupate in the following spring, when the weather is warmer. Thus these parasites are only found in small number in the larvae of *Lyda*

The larvae of Ichneumonidae and Tachinidae are only found in those

*Lyda* which have pupal eyes. From this it follows that these parasites have a single generation per year, and that they only attack the *Lyda* larvae still living on the tree.

*Control.* — Judging from the life history of Lyda, it seems that expensive control measures are not justifiable. The larvae almost always eat the needles of the previous year and very rarely those of the actual year. Consequently the developing buds are not attacked by them. The growth of the trees suffers from the influence of the larva, but not very much. It is consequently advisable to abstain from any control measures against this enemy. The writer recommends that greater importance should be attached to the other enemies of the spruce which accompany *Lyda*, such as: *Pissodes hereyniae, P. scabricollis, Ips typographus, Pityogenes chalcographus*, etc. The method of pasturing pigs in the forest in order to destroy the larvae of *Lyda* is hardly practicable.

946 - **White Grubs (*Lachnosterna* spp.) in Wisconsin, United States of America.** — SANDERS J. G. and FRACKER S. B. in *Journal of Economic Entomology*, Vol. 9, No. 2, pp. 253-261, Fig. 3. Concord, N. H., 1916.

The results are here set out of a series of researches and experiments on white grubs (*Lachnosterna* spp.) undertaken at Madison, Wisconsin, in 1914-1915.

In order to capture the insects, light traps were employed (Coleman gasoline lamps of 300 to 400 candle power) placed near the receptacles containing water to which paraffin had been added, into which the insects, attracted by the light, fall. In Wisconsin there are five Stations (Lancaster, Dodgeville, Baraboo, Madison and Ripon) each provided with eight lamps.

From May to June 1915 there were captured 1 036 400 specimens of *Lachnosterna* belonging to the following species: *L. fusca, L. rugosa, L. grandis, L. dubia, L. hirticula, L. gibbosa, L. ilicis, L. balia, L. tristis, L. nitida, L. implicita, L. marginalis, L. vehemens, L. nova, L. prunina, L. inversa* and *L. villifrons, L. fusca* certainly the most widely distributed species; *L. rugosa* was not reported at Lancaster but was very common in the other Stations lying further north.

In the early morning, in the evening, and generally when the days are cold, the larvae are rarely active and do not feed. On the other hand they are very active and voracious during the hottest hours of the day. Migrations in a vertical direction commenced by the insects under the influence of temperature variations are never observed in the soil. The larvae generally remain at the same level near the surface of the soil from which they only shift to go in search of their food. The latter consists of root or parts of roots. If the larvae are brought into contact with freshly germinated young plants they attack and destroy the radicle without touching the stem. They refuse bran or sweetened dough.

A number of larvae were left for five and a half months in a vessel containing only soil, and no food was given them. At the end of the period of experiment, two larvae were still alive and active; they had fed only on the small amount of vegetable detritus contained in the soil. In view of this

vitality and resistance it is not possible to use control methods based on the starvation principle.

In some experiments carried out on land infested with the larvae of *Lachnosterna*, grasses were transplanted the roots of which had first been steeped in a solution of arsenite of soda; the mortality of the larvae amounted in four days to 22.2 %. Under the same conditions the use of arsenate of lead gives negative results. If roots of young maize plants are poisoned with corrosive sublimate, the mortality of the larvae reaches 50 %.

Excellent results are obtained by protecting the seeds by treatment with creosote ; this substance keeps the larvae off.

RESISTANT PLANTS.

947 – **Resistance of Different Varieties of Wheat to *Mayestiola detructor* in America.** — HASEMAN L. in *Journal of Economic Entomology*, Vol. 9, No. 2, pp. 291-294. Concord, N. H., 1916.

The destructive cecidomyiid "Hessian fly" (*Mayetiola destructor* Say) has caused very extensive injury to wheat almost throughout the great Mississippi valley.

The opinion generally held by farmers is that all varieties of wheat are not equally susceptible to attack, and that some types remain practically immune.

In order to ascertain the truth of this opinion, and also to arrive eventually at a selection of highly resistant types, a series of experiments was undertaken on a very large number of wheat varieties. In these researches there were ascertained the percentage of infected plants, the relative number of larvae, etc. ; analyses were also made of the composition of the plant organs and sap, and observations on the manner in which development takes place, in order to fix and establish possible correlations. In the present work there are set out the results of a first year of research. These results do not yet possess the value of definitive conclusions, but they are none the less interesting, as they confirm the fact that the various types behave variously as regards the attack of *Mayetiola destructor*.

3 varieties of wheat were used : "Fultz", "Fulcaster" and an indigenous type regarded as very resistant.

Sowing was carried out on the 24th October, 1914. On the 10th May, 1915 the following observations were made :

| Varieties of Wheat | % of infected plants | Maximum number of larvae per plant | Average number of larvae per plant |
|---|---|---|---|
| "Fultz" . . . . . | 58 | 18 | 2.72 |
| "Fulcaster" . . . . . | 66 | 8 | 1.46 |
| Indigenous used as control. . . . | 54 | 12 | 1.7 |

As regards this experiment, "Fulcaster" presents marked tendencies to immunity if compared with "Fultz". Furthermore, the results also prove that an indigenous type believed to be highly resistant may in reality be as badly attaked as some selected types.

The following particulars of yields were also obtained :

| Varieties of Wheat | Number of ears | Weight | Weight of 100 ears |
|---|---|---|---|
| | | | gr. |
| " Fulcaster " | 371 | 334 | 90.30 |
| " Fultz " | 439 | 324 | 73.80 |
| Indigenous control | 367 | 273 | 74.38 |

According to the analyses hitherto carried out, a relation between the degree of immunity and the ash content appears to be outlined :

| Varieties of Wheat | % of ash in young plants | % of ash in straw |
|---|---|---|
| " Fultz " | 15.146 | 5.147 |
| " Fulcaster " | 15.379 | 4.598 |
| Indigenous | 14.796 | 4.751 |

The degree of infestation in the three varieties appears to vary in direct proportion to the ash content.

948 - ***Aspidiotiphagus citrinus*, Endoparasite on *Chrysomphalus dictyospermi* in Italy.** — MALENOTTI ETTORE in *L'Agricoltura italiana*, IInd Year (Vth series), pp. 73-75. Pisa, May-June 1916.

MEANS OF PREVENTION AND CONTROL

While collecting *Coccidae* on plants cultivated under glass at Florence, the writer observed a case of parasitism of *Aspidiotiphagus citrinus* (Craw.) How. on *Chrysomphalus dictyospermi* (Morg.) Leon.

This endoparasite, which often hatches from *Aspidiotus hederae*, *A. betulae* and many other species of diaspids, had only been reported previously as a parasite of *C. dictyospermi* in one single case, namely by H. E. HODGKISS, at Cromwell, Connecticut, on hot-house palms.

The degree of parasitism of *Chrysomphalus* by *A. citrinus* was very great. Of 121 females observed on two leaves, there were 21 which had died naturally, 97 parasitised, and 3 free. On other leaves of the same plant the coccids were likewise parasitised in large proportions.

The observations made now allow of establishing clearly the differences between the behaviour of *A. citrinus* as compared with *A. lounsburyi* Berl. and Paoli on the same host. These differences are due in part to the dimensions of the adults of the two parasites which are markedly smaller in the case of *A. lounsburyi*, and in part again by the different pathological action they exercise on their victims.

*Chrysomphalus dictyospermi*, so strongly attacked by *A. citrinus*, was gathered by the Author on leaves of *Sansevieria arborescens* imported from the Natural History Museum of Paris. The species originates from tropical Africa and the East Indies.

The writer was unable to ascertain whether *C. dictyospermi*, which, according to the supervising staff, has always been seen on *Sansevieria*, brought its parasite with it, or whether the latter arises from the Italian form which adapted itself to the imported coccid. In the hot houses of Florence examined by the writer *Chrysomphalus* is not found on citrus

plants. On the other hand specimens were gathered on *Cymbidium Tracyanum, Aralia Reginae, Kentia* sp. and *Arenga* sp., but in small quantity and also attacked by the same endoparasite.

No such effective parasitism takes place on the citrus plants in full cultivation infested by the "bianca-rossa" (*Chrys. dictyospermi*). The case observed by the writer might therefore be explained by the mild temperature and tranquillity which are peculiar to the environments constituted by glass houses, and in the fact that this polyphagous (or, more accurately, polyxenous) insect was compelled for several successive generations during the year to lay its eggs on the same diaspid, which relatively, was not numerous.

949 – **An undetermined Nematode Worm Parasitic on Aphids.** – DAVIS J. JOHN., in *Psyche*, Vol. XXIII, No. 2, pp. 39-40, Fig 1. Boston, Mass., 1916.

The writer has discovered an as yet undetermined nematode in the interior of the body of some aphids (*Anoecia* sp.) living at a slight depth on the roots of *Muhlenbergia* in the evirons of Lafayette, Indiana.

This is a very rare case of parasitism. In 1899, DEL GUERCIO also described a nematode as a parasite and natural enemy of *Erama radicis* Kaltenbach. Other cases of this kind had not been reported since.

950 – **Nicotine Products tried in Germany against "Cochylis" and "Eudemis."** — KOTZEL in *Landwirtschaftliche Zeitschrift für die Rheinprovinz*, 17th Year, No. 18, pp. 264-265. Bonn, May 5, 1916.

In the spring and autumn of 1915, in two vineyards containing 2400 stocks, at Bullay a. d. Mosel, the writer carried out experiments of control of "Cochylis" and "Eudemis," with the following nicotine substances: 1) "Nikotin Florkus Pulver" of the brothers Nördlinger, at Flörsheim; 2) "Queria-Heu-und Sauerwurmpulver" of Otto Hinsberg, at Nackenheim a. Rh.; 3) tobacco juice containing 9-10 % of nicotine, with the addition of a 1 % solution of cotton oil soap.

The nicotine powders considered to be most effective against "Cochylis" were applied under strong pressure, on the 1st June, when the larvae had attained a length of 2-3 mm. The directions for use of the products in question state that at that time alone it is possible to obtain the best results with the powders.

The tobacco juice was dissolved in water (1.5 gallons to 100 gallons of water), then applied on different bunches on the 2nd June, immediately after oviposition.

The result of the treatment was observable as early as the end of June, in counting the coccids on the different branches. A vineyard 5 years old, which was divided into 3 plots, contained on 40 stocks, the following numbers of larvae per plot.

| | | | |
|---|---|---|---|
| Plot 1: | treated with nicotine solution . . . . . | — | 148 larvae |
| " 2: | " " "Queria" powder . . . . . | — | 270 " |
| " 3: | " " "Nikotin-Florkus" powder . | — | 138 " |

In an old vineyard there were counted, for 40 stocks the following number of larvae:

| | | |
|---|---|---|
| Plot 1 : | treated with " Queria " powder . . . . . | — 321 larvae |
| " 2 : | " " nicotine solution . . . . . | — 163 " |
| " 3 : | untreated . . . . . | — 272 " |

In neither of the two vineyards did the " Queria " powder act, and the nicotine solution and " Nikotin-Florkus " powder also failed to give good results. In the course of the summer, however, it was observable that the grape treated with nicotine solution was healthier, and that the stocks untreated and those treated with nicotine powder contained many grapes of inferior value. By adding cotton oil soap to the nicotine its effectiveness is increased.

The control measures undertaken in autumn were only carried out with nicotine solution. Two vineyards were treated from the 20th or 22nd July with a preparation of 1.5 % strength to which cotton oil soap had been added, so that the grapes were completely wetted.

The vineyards were 5 years old ; in one there were found in the middle of September, on 50 stocks of each plot, the following number of grapes attacked by " Eudemis ".

| | | |
|---|---|---|
| Plot 1 : | treated with a 1.5 % solution of nicotine . | — 235 grapes |
| " 2 : | not treated . . . . . | — 636 " |

An old vineyard showed, on 72 stocks per plot, the following numbers of grapes attacked :

| | | |
|---|---|---|
| Plot 1 : | treated with a 15 % solution of nicotine . . . | — 1573 grapes |
| Plot 2 : | not treated . . . . . | — 7475 " |

The effectiveness of control by nicotine in autumn was very remarkable. The grapes were more developed, while the untreated plots contained bunches with but few grapes.

Nicotine acts most effectively when dissolved in water and applied under strong pressure to the inflorescences and bunches.

Many vine-growers mixed the tobacco juice with Bordeaux mixture ; they afterwards added a little soap, and then the whole was spread on the stocks by means of ordinary sprayers. Success in also obtained in this way, although the number of parasites killed is not very high. The process, however, has one disadvantage, namely, that the mixture used for control is too adhesive, remains too long on the grapes, and is difficult to remove by the rain. The grapes thus acquire a bitter taste due to the sulphate of copper. Owing to this fact many musts were found to have a bitter taste in 1915, which is the reason why this method of control is not recommended by the author.

951 - ***Gryllus servillei*, an Injurious Orthopteron in New Zealand.** — CLIFTON E., in *The Journal of Agriculture*, Vol. XII, No. 3, pp. 187-189. Wellington, 1916.

INSECTS INJURIOUS TO VARIOUS CROPS

The black cricket (*Gryllus servillei*) often, during the summer, causes considerable damage in some districts of New Zealand. Generally the lands to suffer most are those recently improved, where there are abundant pools of water and great humidity.

As means of control it is advised : 1) to drain the pools ; the numerous

larvae concealed therein die on exposure to the sun on the dry soil; 2) to graze sheep on the cultivated lands: many insects are crushed by the flocks; 3) to spread here and there in the most infected places poisonous substances (for instance arsenic salts) kneaded with bran and molasses, which the insects eagerly devour.

952 – ***Batrachedra rileyi*, a Microlepidopterous Pest of Maize in America.** — HARNED R. W., in *Journal of Economic Entomology*, Vol. 9, No. 2, pp. 295-298, Fig. 2. Concord, N. H., 1916.

During the last few years, the larvae of the small pink corn worm (*Batrachedra rileyi* Wals.) have caused much injury to maize, both in the fields and warehouses, in almost all the counties of the State of Mississippi.

In 1914, the invasion was limited to the central part of the region (county of Attala) from which, in 1915, it reached all the other counties, which caused the gravest anxiety to farmers.

The writer's observations during the entomological campaign which he undertook on that occasion may be summed up briefly as follows:

1) In the plantations affected, the number of infested ears varies from 10 to 99 % and the number of larvae per ear, according to ARNOLD'S figures averages $4\,^{8}/_{37}$; 2) these larvae partly destroy the rachis and the grains, of which they sometimes devour the whole interior, only leaving the thin external integument intact; or else they mine tunnels when going from one grain to the other, and will even feed on the grains already injured and gnawed by other insects, often completing the destruction of such grains; 3) in warehouses, the larvae of *Batrachedra* generally infest the stored material from November to December, although they are often discovered even in April; 4) plantations situated on hills generally suffer much more than those in the plain; 5) early varieties of maize contain less larvae than late ones; 6) the parasite usually attacks the tip of the ear, from which it encroaches on the other grains and even the rachis; the frosts in January 1915 were fatal to a large number of the said larvae.

953 – **Variegated Cutworm (*Peridroma margaritosa*), a Macrolepidopterous Pest of the Sugar-beet in California.** — BENSEL G. E., in *Journal of Economic Entomology*, Vol. 9, No. 2, pp. 303-306. Concord. N. H., 1916.

The variegated cutworm (*Peridroma margaritosa* (*saucia*) Hübn., which has become very common in the country of Ventura, has during the last few years been responsible for widespread havoc to sugar beet plantations, but especially when the season was cold and foggy.

The larvae of the insect remain concealed during the day in the ground, at a depth of 3 to 5 cm., and come out at night in search of their food. They sometimes attack the aerial parts of the beet to the extent of entirely stripping them of their foliage. In some cases the attack extends to the roots, which are more or less spoilt and gnawed.

Among the natural enemies of *Peridroma* there are two species of *Calosoma*: *C. semilaeve* Lev. and *C. cancellatum* Esch.

The following artificial means of control have been successfully applied: 1) the application of arsenical compounds by means of sprayers

fitted with a special 1 HP gasoline apparatus which serves to maintain a pressure of about 120 lbs during the operation ; 2) applications of aceto-arsenite of copper in powder, applied in the morning when the leaves are still covered with dew, which facilitates the adhesion of the preparation ; 3) the use of light traps (electric or acetylene lamps near which are placed receptacles containing water to which parafin has been added) ; in this way 1 000 000 adult insects were captured in a single season.

954 - ***Epochra canadensis*, a Dipterous Pest of *Ribes* in America.** — WHITNEY L. A. in *Monthly Bulletin of State Commission of Horticulture*, Vol. V, No. 4, pp. 152-157, Fig. 52-55. Sacramento, Cal., 1916.

The yellow currant and gooseberry-fruit fly (*Epochra canadensis* Loew) causes great injury to *Ribes* spp. in numerous localities of the United States and Canada. The female, by means of its sharp-pointed ovipositor, lays its eggs in the interior of the fruits, and the larvae emerging from them devour and spoil the fruits to a large extent.

As means of control, applications of arsenate of lead are advised at the time of appearance of the adults, according to the following formula : arsenate of lead, 4.9 lbs., molasses, 2.5 galls., water, 82.3 gals.

955 - **Hickory Twig Girdler (*Oncideres cingulata*), a Coleopterous Pest of *Diospyros virginiana* ("Persimmon") in the United States.** — See. No. 872 in this *Bulletin*.

ALFREDO RUGGERI, *gerente responsabile*.

(c) Publications of the Bureau of Agricultural Intelligence and Plant Diseases.

1. LE SERVICE DE PROTECTION CONTRE LES MALADIES DES PLANTES ET LES INSECTES NUISIBLES DANS LES DIVERS PAYS (The Present Organization of the Services for the Control of Plant Diseases and Insect Pests in the Different Countries). (1914, 350 pages, 4to) . . . . . Frs. 4 00
2. PRODUCTION ET CONSOMMATION DES ENGRAIS CHIMIQUES DANS LE MONDE (Production and Consumption of Chemical Manures in the World). (Second Edition, 1914, 162 pages, 5 diagrams, 2 maps, 16mo) . . . . . » 3.50

(d) Publications of the Bureau of Economic and Social Intelligence.

1. L'ACTIVITE DE L'INSTITUT INTERNATIONAL D'AGRICULTURE DANS LE DOMAINE DE LA COOPÉRATION, DE L'ASSURANCE ET DU CRÉDIT AGRICOLES (The Work of the International Institute of Agriculture in the Field of Agricultural Co-operation, Insurance and Credit). (In French, German and Italian). (1912, 34 pages, 16mo) . . . . . » 0.50
2. MONOGRAPHS ON AGRICULTURAL CO-OPERATION IN VARIOUS COUNTRIES, Vol. I (1911, 451 pages, 16mo). (In English and French) . . . . . » 3.50
   Do. Vol. II. (1915, 213 pages 16mo). (In English and French) . . . » 3.50
3. AN OUTLINE OF THE EUROPEAN CO-OPERATIVE CREDIT SYSTEMS (Second Edition, 1913, 72 pages, 16mo) . . . . . » 0.50
4. L'ORGANISATION DE LA STATISTIQUE DE LA COOPÉRATION AGRICOLE DANS QUELQUES PAYS (The Organization of the Statistics of Agricultural Co-operation in certain Countries). (1911, 163 pages, 8vo) . . . . . 1.50
5. L'ASSURANCE-GRÊLE DANS QUELQUES PAYS ET SES PROBLÈMES (Insurance against Hail in some Countries and its Problems). (1911, 110 pages, 8vo) . . » 1.50
6. AGRICULTURAL CREDIT AND CO-OPERATION IN ITALY: SHORT GUIDE TO RURAL CO-OPERATION IN ITALY (in English, 35 pages and in Italian, 34 pages, 16mo) . . . . . » 0.25

(e) Other publications.

1. L'INSTITUT INTERNATIONAL D'AGRICULTURE, SON ORGANISATION, SON ACTIVITÉ, SES RÉSULTATS (The International Institute of Agriculture, its Organization, Activity, and Results). (1914, 31 pages, in English, French and Italian; illustrated) . . . . . Frs. 1 —
2. LOUIS-DOP: LE PRÉSENT ET L'AVENIR DE L'INSTITUT INTERNATIONAL D'AGRICULTURE (CONFÉRENCE) (Present and Future of the International Institute of Agriculture) (Address). (1912, 60 pages, 16mo). . . . . » 1 —
3. SANTIAGO ALDUNATE: EL INSTITUTO INTERNACIONAL DE AGRICULTURA Y SU IMPORTANCIA PARA LA AMÉRICA LATINA, EN ESPECIAL PARA CHILE (Conferencia) (The International Institute of Agriculture and its Importance for Latin America, especially for Chile). (1913, 30 pages, 16mo) (Address). . . . » 1 —

## II. Publications not for Sale.

1. CONFÉRENCE INTERNATIONALE DE 1905 POUR LA CRÉATION D'UN INSTITUT INTERNATIONAL D'AGRICULTURE (International Conference of 1905 for the Foundation of an International Institute of Agriculture), (1905, 254 pages, 4to).
2. ACTES DES ASSEMBLÉES GÉNÉRALES DES ANNÉES 1908, 1909, 1911, 1913 (Proceedings of the General Assemblies of 1908, 1909, 1911 and 1913). (Four volumes, 8vo., one 16mo).
3. PROCÈS-VERBAUX DU COMITÉ PERMANENT DES ANNÉES 1908, 1909, 1910, 1911, 1912, 1913 (Procès-verbaux of the Permanent Committee, 1908, 1909, 1910, 1911. 1912, 1913, 1914 and 1915). (Five volumes, 8vo., and two 16mo).
4. RAPPORTS ET ETUDES DU BUREAU DE LA STATISTIQUE GÉNÉRALE (Reports and Studies of the Bureau of General Statistics). (1911, 260 pages, 8vo).
5. THE SCIENCE AND PRACTICE OF FARMING DURING 1910 IN GREAT BRITAIN. (646 pages, 16mo).
6. ETUDE SUR LES RECENSEMENTS DE LA POPULATION AGRICOLE, LES SALAIRES DE LA MAIN-D'ŒUVRE RURALE ET LES COURANTS D'ÉMIGRATION DANS LES DIFFÉRENTS ETATS (Study on the Census Returns of the Agricultural Population, the Wages of Rural Labour, and the Currents of Emigration in the Several Countries). (1912, 150 pages, 8vo).

NOTE.

(1) All subscriptions and remittances for the Institute's publications should be made either directly to the International Institute of Agriculture, Rome, or to the principal booksellers.

For Great Britain and Ireland, subscriptions to the Bulletins 1, 2, 3 and remittances for the Year Books are also received at the Board of Agriculture and Fisheries, 4 Whitehall Place, London. S. W.

(2) The prices quoted include packing and carriage. All our publications are despatched on receipt of postal order or international reply coupons.

(3) Despatch is made with every care and punctuality, but unregistered volumes travel at consignee's risk

(4) To avoid miscarriage, for which the Institute does not hold itself responsible, an additional amount of 25 centimes for registration should be sent with each order.

(5) In case of change of address, the subscriber is requested to notify the Publishing Bureau of the Institute, forwarding address label.

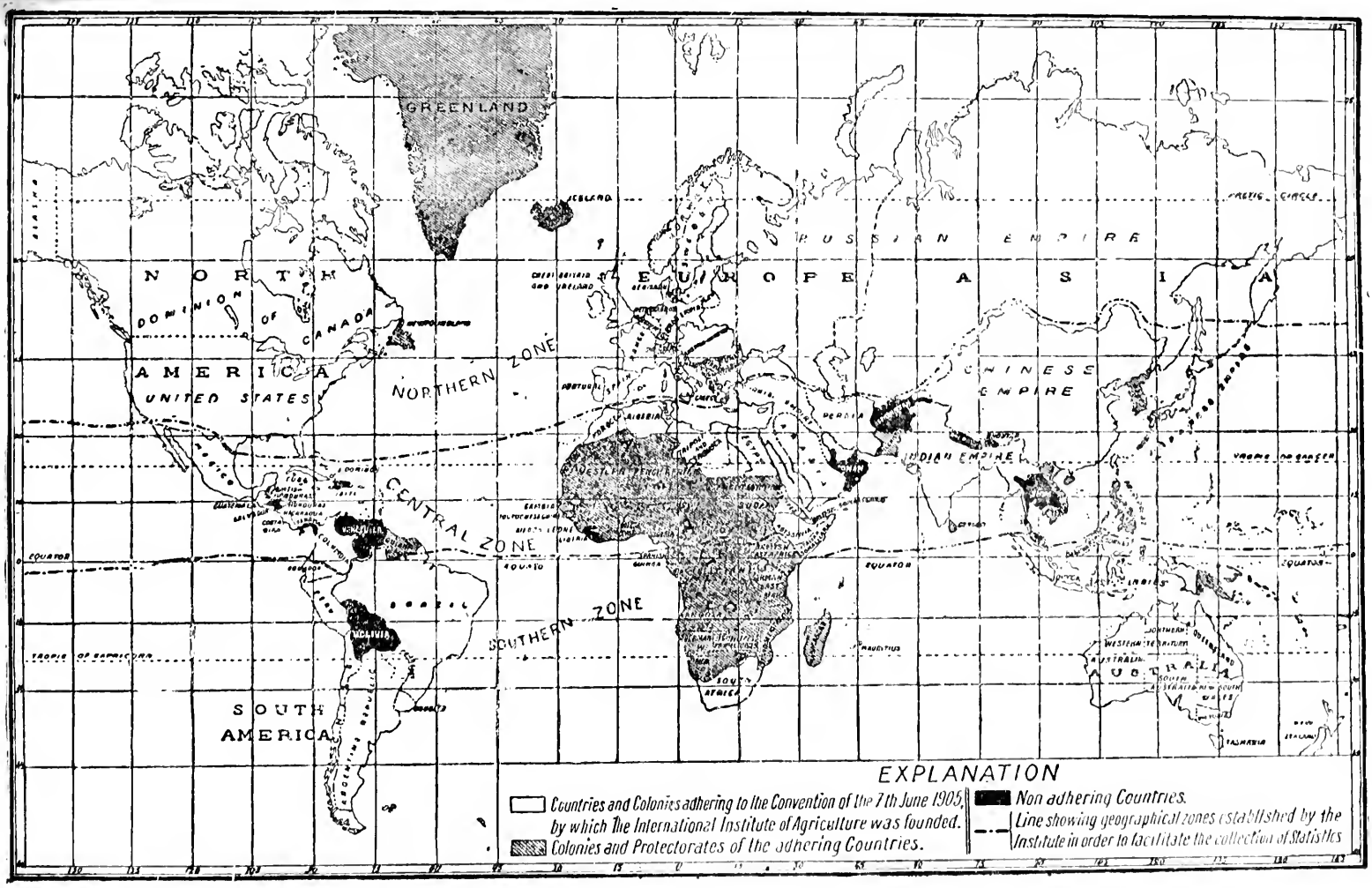
GREENLAND
ICELAND
NORTH AMERICA
DOMINION OF CANADA
UNITED STATES
NORTHERN ZONE
CENTRAL ZONE
SOUTHERN ZONE
SOUTH AMERICA
EUROPE
ASIA
RUSSIAN EMPIRE
CHINESE EMPIRE
INDIAN EMPIRE
PERSIA
AFRICA
SOUTH AFRICA
AUSTRALIA
TASMANIA
NEW ZEALAND
EQUATOR
TROPIC OF CAPRICORN
ARCTIC CIRCLE
EXPLANATION
Countries and Colonies adhering to the Convention of the 7th June 1905, by which The International Institute of Agriculture was founded.
Colonies and Protectorates of the adhering Countries.
Non adhering Countries.
Line showing geographical zones established by the Institute in order to facilitate the collection of Statistics

INTERNATIONAL INSTITUTE OF AGRICULTURE
BUREAU OF AGRICULTURAL INTELLIGENCE AND PLANT DISEASES

# INTERNATIONAL REVIEW OF THE SCIENCE AND PRACTICE OF AGRICULTURE

MONTHLY BULLETIN
OF AGRICULTURAL INTELLIGENCE AND PLANT DISEASES

YEAR VII. - NUMBER 9
SEPTEMBER 1916

ROME
PRINTING OFFICE OF THE INSTITUTE
1916

# Publications of the International Institute of Agriculture.

## I. Publications for Sale.

### A. — *MONTHLY OR WEEKLY PUBLICATIONS.*

| | Annual subscription | Single number |
|---|---|---|
| 1. INTERNATIONAL CROP REPORT AND AGRICULTURAL STATISTICS (*Bulletin of Agricultural and Commercial Statistics*), published monthly in English, French, German, Spanish and Italian, 16mo | Frs. 6 | 0,60 |
| 2. INTERNATIONAL REVIEW OF THE SCIENCE AND PRACTICE OF AGRICULTURE (*Monthly Bulletin of Agricultural Intelligence and Plant Diseases*), published monthly in English, French, German, Spanish and Italian. (Each number consists of about 180 pages, 16mo) | » 18 | 2 — |
| 3. INTERNATIONAL REVIEW OF AGRICULTURAL ECONOMICS (*Monthly Bulletin of Economic and Social Intelligence*), published monthly in English, French, German, Spanish and Italian. (Each number consists of about 150 pages, 16mo) | » 18 | 2 — |
| Subscription to all three Bulletins | » 36 | |

### B. — *YEAR BOOKS.*

| | | |
|---|---|---|
| 1. ANNUAIRE INTERNATIONAL DE STATISTIQUE AGRICOLE POUR 1910 (International Year Book of Agricultural Statistics, 1910). (1912, XLVIII + 327 pages, 16mo) | Frs. | 5 — |
| Do. Vol. II, Years 1911-1912. (1914, XXXIV + 624 pp. 16mo) | » | 5 — |
| Do. Vol. III, Years 1913-1914. (1915, XLIV + 788 pp. 16mo) | » | 5 — |
| 2. ANNUAIRE INTERNATIONAL DE LÉGISLATION AGRICOLE, 1st. Year, 1911, (International Year Book of Agricultural Legislation, 1911). (1912, 1,122 pages, 16mo) | » | 10 — |
| Do. 2nd Year, 1912. (1913, 994 pages, 16mo) | » | 10 — |
| Do. 3rd Year, 1913. (1914, 1,114 pages, 16mo) | » | 10 — |
| Do. 4th Year, 1914 (1915, LXVIII + 1,020 pages, 16mo) | » | 10 — |
| Do. 5th Year, 1915 (1916, LXXVXVI + 1,460 pages, 16mo) | » | 10 — |

### C. — *OTHER PUBLICATIONS*

#### (*a*) Publications of the Library.

| | | |
|---|---|---|
| 1. CATALOGUE DE LA BIBLIOTHÈQUE. ANNÉE 1909 (Catalogue of the Library, 1909). (356 pages, 8vo) | Frs. | 3 — |
| 2. LISTE DES REVUES ET JOURNAUX RÉGULIÈREMENT REÇUS PAR L'INSTITUT, 1913 (List of Reviews and Papers regularly received by the Institute, 1913). (84 pages, 16mo) | » | 0.50 |

#### (*b*) Publications of the Bureau of Statistics.

##### (1) *Various publications*

| | | |
|---|---|---|
| 1. L'ORGANISATION DES SERVICES DE STATISTIQUE AGRICOLE DANS LES DIVERS PAYS, Vol. I (The Organization of the Agricultural Statistical Services in the Different Countries, Vol. I). (1910, 446 pages, with tables in addition to the text, 16mo) | » | 4 — |
| Do. Vol. II. (1913, 146 pages, 16mo) | | 2 — |
| 2. RECUEIL DE COEFFICIENTS POUR LA CONVERSION DES POIDS, MESURES ET MONNAIES AU SYSTÈME MÉTRIQUE DÉCIMAL (Collection of Coefficients for the Conversion of Weights, Measures, and Money Values into the Decimal Metric System). (1914, 84 pages, 32mo) | » | 1 — |

##### (2) *Monographs (New Series).*

| | | |
|---|---|---|
| 1. L'ORGANISATION DE LA STATISTIQUE DU COMMERCE EXTÉRIEUR EN ITALIE (Organisation of the Statistics of Foreign Trade in Italy). (1913, 190 pages 16mo) | | 2 — |
| 2. LE MARCHÉ DES CÉRÉALES D'ANVERS (The Antwerp Corn Market) (1913 62 pages, 16mo) | » | 1 — |
| 3. LES BOURSES DES PRODUITS AGRICOLES DE HAMBOURG ET BUDAPEST (The Agricultural Produce Exchanges of Hamburg and Budapest). (1913, 55 pages, 16mo) | » | 1 — |
| 4. NOTES SUR LES STATISTIQUES DU COMMERCE EXTÉRIEUR DANS LES DIFFÉRENTS PAYS: Publications Statistiques, Territoires, Sortes de Commerce, Provenances et Destinations des Marchandises (Notes on the Statistics of Foreign Trade in the Different Countries: Statistical Publications, Territory, Kinds of Trade, Source and Destination of Goods). (1914, 96 pages, 16mo) | » | 2 — |
| 5. LA RÉPARTITION AGRICOLE DES TERRITOIRES DES DIFFÉRENTS PAYS (Areas under Crops in the Different Countries). (1914, 310 pages, 16mo) | » | 5 — |

##### (3) *Other publications.*

UMBERTO RICCI: LES BASES THÉORIQUES DE LA STATISTIQUE AGRICOLE INTERNATIONALE (Theoretical Bases of International Agricultura. Statistics),

INTERNATIONAL INSTITUTE OF AGRICULTURE
BUREAU OF AGRICULTURAL INTELLIGENCE AND PLANT DISEASES

# INTERNATIONAL REVIEW OF THE SCIENCE AND PRACTICE OF AGRICULTURE

MONTHLY BULLETIN
OF AGRICULTURAL INTELLIGENCE AND PLANT DISEASES

YEAR VII. - NUMBER 9
SEPTEMBER 1916

ROME
PRINTING OFFICE OF THE INSTITUTE
1916

*In quoting articles, please mention this BULLETIN.*

# CONTENTS

## First Part: ORIGINAL ARTICLES.



## Second Part: ABSTRACTS.

## AGRICULTURAL INTELLIGENCE.

### I. — General Information.



### II. — Crops and Cultivation.

#### *a*) General.



#### *b*) Special.

## III. — LIVE STOCK AND BREEDING.

### *a*) GENERAL.



### *b*) SPECIAL.

## IV. — Farm Engineering.



## V. — Rural Economics.



## VI. — Agricultural Industries.



# PLANT DISEASES.

## II. — Diseases not due to parasites or of unknown origin.



## III. — Diseases due to Fungi, Bacteria and other Lower Plants.

## IV. — WEEDS AND PARASITIC FLOWERING PLANTS.



## V. — INJURIOUS INSECTS AND OTHER LOWER ANIMALS.



## VI. — INJURIOUS VERTEBRATES.



The Bureau assumes no responsibility with regard to the opinions and the results of experiments outlined in the Bulletin.

The Editor's notes are marked (*Ed.*).

FIRST PART.

# ORIGINAL ARTICLES

## Historical Review of Canada's Timber Industry

by

JAMES LAWLER.

When the adventurous sailors from Europe first visited the part of North America now known as Canada they were not looking for timber. They were seeking a passage to India and China and, failing that, desired to carry back in their ships large value in small compass — gold, silver, precious stones, furs. But though they did not seek them the forests were there, covering the shores of bay and headland and the banks of rivers, — forests of pine, spruce, hemlock, oak, maple and birch. They stretched away as far as the eye could see from the most lofty lookout. They were dark and sombre and presented a maze which none but a native could thread and — worst of all — they effectually concealed those natives and their intentions, leaving the pioneers a prey at once to loneliness and fear.

Some writers have lamented that North America on the east side was found by the earliest settlers covered with these heavy forests which rendered life exceedingly difficult and precarious for the colonists, while the interior was a vast treeless plain or prairie whereon the settler might have secured abundant crops in one or two seasons. By the time that settlement had reached the prairies, the timber had largely been destroyed and part of the energy of several generations had been wasted in trying to make farms on certain areas of inhospitable non-agricultural land along the sea-coast. It is idle to speculate in this manner and, doubtless, had the forests been in the interior and the prairies on the shores of the continent the early settlers would have suffered as much from lack of fuel and building material as they actually did from lack of arable land in which to grow crops

## Conditions during the French regime.

The country was taken for the king of France by Jacques Cartier in 1534, but it was over a century later before anything began to be heard about the timber as an asset. The first timber regulations, as appears from a grant of land made in 1683, were made in regard to the reservation of oak to build the King's ships. The remainder of the timber was of no consequence. In fact, as the first need of the colonists was food, the endeavour was to get cultivated land upon which crops might be raised, and the forest was deemed an enemy to be conquered and obliterated. During the French regime the timber was not considered apart from the land. The colony was divided up into large blocks of land, from 100 to 500 square miles in extent, which were granted to seigniors or feudal lords upon conditions involving the settlement of these lands with tenants or retainers, commonly called "habitants", who held whatever rights they had, not from the Crown but from the seignior, under feudal tenure.

Timber formed such a negligible part of the commerce of that day that the only question considered was its apportionment among the different parties to these land grants, the Crown, the seignior and the "habitant".

The determination of the pioneer settlers to get rid of the trees which encumbered their lands and their use of fire for this purpose was later felt in the shortage of timber for fuel in the immediate neighbourhood of centres of population, so that by 1720 stringent laws were passed against trespassing by the inhabitants of towns and villages on the lands of their neighbours to cut fuel.

## New regulations with British occupation.

When the British took possession of New France in 1763 their solicitude, like that of the French, was to secure timber for the building and repairing of the royal navy — oak (*Quercus alba*, or *Q. rubra*) for hulls and pine (*Pinus strobus* or *P. resinosa*) for masts. But their views went a step further than those of their predecessors. They desired not only to secure existing stands of oak and pine, but also deemed it advisable that any areas particularly suited to the growing of these species should be set apart and protected, so that they might supply timber in perpetuity. The instructions of the British Government to the first Governor, James Murray, are clear on this point and these instructions were repeated when Governor Guy Carleton took up his duties in 1775.

If this policy had been followed, and non-agricultural lands reserved for timber as settlement advanced into the country, the whole history of timber regulations and the development of the timber industry in Canada would have been changed and Canada would have been better off in regard to both agricultural and forest development, but this was not to be. Such a policy of examination, segregation and conservation was over a century in advance of the time. Nor, regrettable as was this falling away from an

ideal, could an adhesion to such a policy be expected under the circumstances. When over one hundred years later men supplied with the latest information were still talking about "illimitable" and "inexhaustible" forests it was not to be expected that in 1775, before the days of systematic surveys, men would have the foresight to persist in conserving what seemed almost too cheap and too abundant.

The trade in timber for the British navy began practically with the British occupation of the country. The commercial trade followed in the wake of this business. In fact it was begun by the contractors who received licenses to cut timber for the navy. This commercial trade, however, grew very slowly, chiefly owing to the opposition of British builders who claimed that timber from the Baltic region was much superior to that from Canada.

During and after the Napoleonic wars, however, the British government imposed heavy duties to pay for those wars, and in these duties gave substantial preference to the colonies. In 1803 Great Britain imported 12,133 loads (a load equalled 50 cubic feet) of timber from British North America and 280,550 loads from European countries. In 1820 the figures had changed to 335,556 loads from the colonies and 166,600 loads from European countries.

In the early years of the nineteenth century, timber was imported from the United States into Canada, but only for the purpose of shipping out again to Britain in order to take advantage of the preference granted to colonial timber. Duties on such timber coming into Canada were imposed by an Act passed by the British Parliament in 1820. Shortly after this, Canada began to export lumber to the eastern United States and from that time onward the trade grew very rapidly, until in 1867, the year when the British North American colonies were confederated into the Dominion of Canada, the value of timber exported to Great Britain was $ 6,889,783, while the value of that exported to the United States was $ 6,831,252. The growth in the home use of timber has been even more rapid than that of the export trade.

## Genesis and development of Canadian Timber Regulations.

In the military, political and commercial exigencies of the nineteenth century the policy of conserving any natural resources was almost completely forgotten. There were individuals who had more information than their neighbours on this subject, but, speaking generally, the idea of all people in Canada was that the sooner the adjacent and circumjacent forest was removed the better, because then the area of agricultural settlement would be increased and this was the hope and aim of the legislators and the people alike. In the settlement of Eastern Canada from the Atlantic to Lake Huron the progress of settlement was practically always from a waterway into the interior. The settlement was founded on a seacoast, bay, river or lake, and townships or parishes, ranging from three to ten miles square, were marked off extending landward from the water's edge. Behind

the front row of townships came another, and, so on, into the interior, as far as the need of the day demanded. The people saw the first and second rows of townships cleared and filled with farmers, and reasoning from these totally insufficient data, they imagined that the timber administration would settle itself. They thought that all that was necessary was to give the lumberman the right to take off the timber and that the farmer, ever on his heels, would press him further into the interior where it was believed more and better timber existed. In fact this idea of getting the lumberman to take off the timber without delay was so strong in the minds of early legislators that a clause was inserted in all contracts in Upper Canada and Lower Canada (Ontario and Quebec) that they must cut at least one thousand feet per acre per year. This was later reduced to five hundred feet per year, but the underlying idea remained as the spirit of the regulations. In the public mind the real and natural occupier of the land was the farmer and the lumberman was viewed as a necessary evil, who must be tolerated because he paved the way for the farmer. When anything like lack of markets or transportation interfered with the operations of the lumberman the settlers did not hesitate, even long after the timber trade was established, to cut and burn the most magnificent timber in huge piles containing thousands of feet.

## Lands leased, not sold to lumbermen.

This being the state of affairs, the system of leasing tracts of land to lumbermen for sufficient time to enable them to take off the timber was the natural outcome. When a settlement was begun, say at the mouth of a river, a lumberman would be given in the spring the lease of a block of land technically known as a "limit" (1), either back of the settlement or farther up the river, with the understanding that he would take off the timber during the following autumn and winter, so that farmers might enter upon the land the next spring. Thus in a great part of Eastern Canada to-day the timber is cut by lumbermen who lease the ground upon which the timber grows from the government, under an annual lease which terminates on the first day of May. Since the lumberman was viewed as a bird of passage, always being pushed farther back into the unknown interior where in the public mind the timber was always "illimitable and inexhaustible", he did not gain possession outright of the land on which the timber grew. While in the province of Nova Scotia the great proportion of the timber land is held by purchase or grant in fee simple yet, viewing the whole of Canada, the proportion of timberland held in fee simple is so small that practically the leasing system may be said to be the rule. Probably less than 5 per cent. of the timberlands of Canada are owned in fee simple, the remainder being owned by the different provincial governments or by the Dominion Govern-

(1) So called because the lessee must not cut timber outside certain stated limits or boundaries.

ment, and such areas as are now being worked are leased to the lumbermen. the revenue arising from leases and timber dues going to these governments and amounting at the present time (1916) to about $7,500,000 per year.

The point that is overlooked in the theory that the lumberman is to be regularly pushed back as settlement advances is that all soils are not suited for agriculture. If it had been conceived by the general public in Canada, say in 1840, that there were tracts of land near the first settled parts of all the eastern provinces that would grow fine timber but would never grow profitable grain or root crops, then provision, probably, would have been made for managing these areas permanently as forests. The law would not have been based on the supposition that timber was but a passing resource but a classification of soils would have permitted the two industries, farming and lumbering, to be developed side by side to the best advantage of both.

When the lease was executed, since the timber was the object of the lessee, the ground rent was set at a figure comparatively trifling. There was then a stumpage tax (1) (or dues) of so much per thousand feet, which was collected annually after the timber had been cut and measured. It was later seen, however, that one limit might be much more advantageously situated as to transportation or have a better quality of timber than another and that a uniform stumpage tax alone was unfair. This was got over by auctioning off these leases to the highest bidder. The dues and ground rent being fixed, the government asked for a premium or "bonus" over and above these fixed charges and the lumberman who offered the highest premium got the limit. Starting at an average of about five dollars per square mile of limit in the sales of 1849, these premiums rose steadily with the advance in the price of timber until in the Ontario sale of 1903 the average premium over a large number of limits was over $4 000 per square mile and the highest premium paid was $31,500 per square mile for a limit ten miles in extent.

Since the underlying idea of the present timber regulations is that the land will eventually be occupied by the farmer, there is generally a provision in the older leases whereby upon notice being given the lumberman must, at the date fixed, abandon part or even all of his limit to allow farmers to settle and begin operations. These farmers can use the timber, or certain parts of it, without paying stumpage dues or rents. The result has been that again and again men who had no intention of farming secured the right to settle on lands for the ostensible object of cultivating them when their real object was to cut the timber and sell it. This class of men is known as the "bogus settler"; and the drawing of a fair line between the lumberman and the real settler on the one hand, and the bogus settler

(1) "Stumpage tax" gets its name from the fact that in the early years the collector of timber revenue counted the number of stumps and from this estimated the amount of timber cut and the amount of the tax. In recent years a government measurer or "scaler" measures the actual logs as they are cut.

on the other has for half a century been one of the difficulties of Canadian forest administration.

This plan of annual leases, with ground rent dues and bonuses, continued to be the method for many years in Canada, and, generally speaking, when the interior provinces and British Columbia came to be opened up it was the method applied to the forests therein.

Canada, it must be remembered, existed previous to 1867 as a group of British Colonies each independent of all the rest, though all owing allegiance to Great Britain. When the colonies on the eastern side of the continent were federated into the Dominion of Canada in 1867 an apportionment of assets and liabilities, rights and duties, was made as between the colonies (which at that time became provinces) and the new Dominion or federal government. By this apportionment the provinces retained the possession and management of their lands and forests. British Columbia, which was a British Colony on the Pacific coast, came into the federation later under the same arrangement. One of the objects British Columbia had was to get railway connection with the Atlantic coast and, to assist in securing this, British Columbia granted to the Dominion Government a strip of territory forty miles wide and about five hundred miles long through the province from east to west — twenty miles on each side of the railway which should be built.

Canada consisted then of the old colonies of Nova Scotia, Prince Edward Island, New Brunswick, Quebec and Ontario (Lower Canada and Upper Canada) on the Atlantic Seaboard. British Columbia on the Pacific joined the confederation a little later. In the interior was a stretch of prairie country, roamed over by bison and redmen (North American Indians), and, since 1670, under the control of a British trading company — the Hudson's Bay Company. The Dominion of Canada, for a cash payment and other considerations, bought out the rights of the Hudson's Bay Company, and after a period of direct federal control, created three provinces in this territory: Manitoba, Saskatchewan and Alberta. These provinces were given a cash subsidy in lieu of their lands, minerals and forests. The result is that the older provinces, that were originally colonies, retain the management of their lands and forests, while in the newer provinces of Manitoba, Saskatchewan and Alberta, and in the forty-mile-wide strip through British Columbia on each side of the Canadian Pacific Railway, the Dominion Government manages the lands and forests.

The settlement and commercial and governmental development of Canada from the Atlantic coast to the Rocky Mountains has been uniform from east to west, and throughout this region the selling of the timber and the leasing of the land under it by the government to the lumberman has been the basis of the timber administrative system. British Columbia, the only province which lies west of the Rocky Mountains, was settled by people who reached it from Great Britain and Eastern Canada by way of Cape Horn or the Isthmus of Panama or by the overland route through the United States. Lumbering in this province was begun in 1827 by DR. JOHN MCLAUGHLIN, a Chief Factor of the Hudson's Bay Company, who

set up a saw-mill which sawed one thousand feet, board measure, a day. Even here, however, the leasing system was the basis.

The underlying theory that the farmer would soon push back the lumberman from his present limits into the unexplored hinterland is the probable reason for the indefinite character of these leases in regard to termination. In the first instance they were all yearly leases and to-day the great majority retain this form. In Nova Scotia the small amount of forest land held by the Crown is leased for varying terms from one year up to 99 years; in New Brunswick there is now a fixed term of twenty years with the right to renew for ten or twenty years under certain conditions; in Quebec, Ontario and the Prairie Provinces the leases are all annual in form. In Quebec, it is stated that where the land is unquestionably non-agricultural the leases have, through custom, become practically perpetual and the government has announced that it will not change the terms oftener than once in ten years. In Ontario, the Crown has always contended that the leases were for one year only and that while it renews them from year to year on non-agricultural land, it can at any time terminate the lease by giving six months' notice. It has also announced that it will not alter its dues and ground rents oftener than once in ten years. Recent sales in Ontario have been by auction for a rate per thousand feet, board measure, of the standing timber. There are no dues or bonuses and the purchaser is given a limited time in which to take off the timber, after which the land reverts to the Crown.

British Columbia has recently made an elaborate revision of its system. By this revision most of the leases become perpetual but the government takes power to revise the terms every five years. These dues are fixed on a basal price for lumber at the mill. If at the end of any five year revision period the price shall have risen above this base price then the government will take an increased royalty or tax in proportion to the increased price.

All the governments make provision for fire protection and have called upon the lumbermen to pay an increasingly large proportion of the cost of this protection on lands leased to lumbermen; the governments, of course paying the whole cost of protection on the areas of forest land where the Crown has not yet parted with the right to cut the timber.

The policy of forest reserves, that is of land unsuited to agriculture set apart to grow timber for ever, is a recent development in Canada and the method of conducting operations on these reserves is one of the administrative problems now being worked out in this country.

## Methods of Canadian Lumbering.

All of Eastern Canada drains into the Atlantic through great lakes and rivers. The great forests were on the banks of these rivers and their tributaries. This was also largely true of British Columbia in respect to the Pacific, so that with comparatively small exceptions all of Canada's lumbering operations have been carried on by water. Under this system the trees are felled in the autumn and winter, drawn by horses to the rivers and

streams and piled on the ice which at that time covers the surface. When the rivers break up in the spring the freshet carries the logs with it out to the mouths of the rivers, where they empty into the great rivers like the St Lawrence or Ottawa or the great lakes like Huron or Ontario. Here the logs are boomed (1) and the logs of the different owners separated by means of the timber brands on the ends of the logs. The logs thus separated are sawn into boards and planks in the mills located along the river bank.

The practice is now prevalent of bringing the mills as close as possible to the forest and shipping out only the finished product, but in the early days the mills were located at lumber centres on the great rivers and the logs were formed into rafts and these rafts were floated down the rivers, run over rapids and towed across lakes to the mill. For many years the export trade consisted largely of square timber, that is timber squared by the axe in the woods. This trade, which employed many hundred sailing ships, had its centre at the port of Quebec, where sometimes as many as three hundred ships were to be seen loading at one time. It reached its highest point about 1870 and since that, owing to the wastefulness of the trade and the dangerous condition in which it left the woods, owing to the chips and debris, it has been attacked from both the commercial and legislative sides and had dwindled away to almost nothing.

Nowadays the steamer, schooner or barge carries the sawn lumber from the lake port or river town to the seaport where it is loaded on ocean-going ships. The method thus differs from those employed in the United States, where the transportation is largely done by logging railways. This water transportation feature with the risks and dangers attending the "driving" of the logs down the small streams and, attending the "booming" and "rafting" and "shooting" of rapids and running of "log-chutes", has bred up a hardy, adventurous class of men equally skilful in the use of the axe, the pikepole (2) and the paddle, and has developed a literature in prose and verse which has forever given a touch of romance to Canadian lumbering.

## The Forest Trees of Canada

by

R. G. LEWIS.

Coniferous forest growth prevails over the greater part of Canada's potential forest area. If we eliminate from our conception of potential forest

(1) "Boomed"; that is floated into great enclosures formed of floating logs chained together end to end and anchored to piers set in the river. As the logs float through a narrow entrance the river men or "log drivers" skilfully direct them into the enclosures of the different owners as indicated by the brands or marks on the logs.

(2) The pikepole is a pole fifteen or twenty feet long fitted with a sharp spike and hook at one end, which pole the river "driver" uses to balance himself as he walks along the floating, rolling logs, and to draw the logs into the desired channels or away from rocks.

that which grows on land fit for agriculture we eliminate most of the hardwood forests of commercial value. In the rigorous climate of Canada deciduous-leaved trees, as a general rule, are found in commercial sizes and quantities only on the better sites. Where coniferous forests are destroyed by fire or lumbering operations and deciduous-leaved trees, such as the birches and poplars, establish themselves by means of their light wind-borne seeds, the change is only a temporary one. The original coniferous forest will eventually re-establish itself by its more persistent growth.

In Canada there are approximately 150 different species and varieties of trees. Only 32 of these are conifers but the wood of these forms 95 percent of our forest products, and the trees themselves cover an even larger proportion of our potential forest area.

While the actual number of species of deciduous-leaved trees seems large in comparison to their commercial importance, out of a total of some 118 species and varieties, only four or five are worthy of comparison with the conifers. The others form the northernmost fringe of the great interior hardwood forest type of the United States. Many of these species are confined in Canada to a narrow strip of territory along the north shore of Lake Erie and as far as the discussion of Canada's timber resources are concerned they may be classed with exotic tree growth.

The five native spruce species are all of commercial importance. Spruce lumber formed over one third of the total output of Canadian sawmills in 1914. Spruce pulpwood is used in preference to all others and in the same year formed over two thirds of the total quantity of pulpwood consumed in Canadian pulpmills and exported in the raw or unmanufactured state. The wood has a long, tough, colourless fibre and being free from resin is considered to be the best material for pulp manufacture on the market of the world.

Spruce is also used for railway ties or sleepers, telegraph, telephone and electric light and power line poles, cooperage, mining timbers, fencing and firewood. Of the five native spruce species the white spruce (*Picea canadensis*) is the most abundant and the most important commercially. With black spruce (*Picea mariana*) it ranges from Labrador to Alaska, extending northward almost to the limit of tree growth and southward into the United States. Toward the northern limits of its distribution the tree, of course, does not reach commercial size being in many cases little more than a prostrate shrub.

The black spruce (*Picea mariana*) is of less value, being a smaller, slow-growing tree, often confined to swampy situations and reaching saw log or pulpwood sizes only under more favourable conditions of growth. The red spruce (*Picea rubra*) is confined in its distribution to the Province of Quebec and the Maritime Provinces. Its wood is considered to be of greater technical value than that of the other spruce species, but it is not usually so abundant on the market as the white spruce. The western species (*Picea Engelmanni* and *Picea Sitchensis*) are not found east of the Rocky Mountains and their utilization is confined to the Province of British Columbia, they being essentially Pacific Coast trees. Their wood is of high technical

value and can usually be obtained in larger dimensions than that of the other spruces, as the trees attain great size in this region.

As their distribution is restricted and as they are found growing with trees of greater commercial value, their lumber does not assume great national importance at the present time.

There are nine distinct pine species native to Canada, and of these, six are of great commercial importance. The eastern white pine (*Pinus Strobus*) is the most valuable coniferous wood in Canada. It has superior qualities for the wood worker and enjoys a world wide reputation. Up to a few years ago it was the most important wood in Canada in point of quantity of lumber sawn and exported in the form of square timber (Quebec pine). Owing to increased scarcity of good material the wood has fallen off in production till its place has been taken at the head of the list by the spruces, of which there is a greater supply of available material. The wood of white pine is soft, easy to work, fairly durable and strong in comparison to its weight. Its most valuable quality in addition to these is its faculty for holding its shape with a minimum of shrinking or swelling once it has been properly seasoned. In this latter respect there are a few woods of commerce that can surpass it. The western white pine (*Pinus monticola*) is similar in most respects to the eastern species. It is a smaller tree, of comparatively rare occurrence and is of minor commercial importance. In distribution it is confined to the province of British Columbia while the eastern white pine is found from eastern Manitoba to the Atlantic seaboard. The remaining pine species are sometimes classed as "hard pines", their wood being harder and more resinous than that of the "soft" or white pines. The red or Norway pine of eastern Canada and the western yellow or "Bull" pine of the interior of British Columbia (*Pinus resinosa and ponderosa*) are valuable sources of light structural timber and are also sawn into lumber. The two jack pines (*Pinus Banksiana* of the east and north and *Pinus Murrayana* of the Rocky Mountains and British Columbia) are not considered as valuable timber producing trees although they are both used locally for rough construction. Jack pine railway ties are used to an enormous extent on the newly constructed transcontinental railway lines as the wood is handy to the right-of-way and can be obtained in sufficient quantity with a minimum of haulage. In 1914 over forty per cent of the ties used in Canada were of this wood. Its cheapness and abundance are its most important characteristics in this respect. In the manufacture of "Kraft" pulp by the sulphate process it has been found that jack pine is a satisfactory raw material and the use of the wood for this purpose has increased in the last few years very greatly. There are three other species of the genus Pinus that reach tree size in Canada, but these are only of local importance for firewood.

The Douglas fir (*Pseudotsuga mucronata*) often erroneously called "Oregon Pine", of British Columbia and the Pacific Coast is the only representative of its genus in Canada. It yields more lumber annually than any other single species in America. The cut in Canada represents over 15 per cent of the total lumber production. The tree in Canada is not found east of the Rocky Mountains, the greater part of the lumber being obtained

in the Coast Region of British Columbia. This is Canada's largest tree and from it larger timbers can be obtained than from any other tree in America, with the single exception perhaps of the California Redwood (*Sequoia*). Up to the present time its use has been largely confined to structural purposes but its attractive grain and figure are winning for it popularity as a wood for more decorative purposes such as interior finish and cabinet work. The wood comes fourth in importance in Canada as a material for railway ties and is used extensively for mining timbers. It is noted chiefly for its strength and durability and the dimensions in which it can be obtained.

There are three hemlock species in Canada's forests, two of which are valuable timber trees. The eastern hemlock (*Tsuga canadensis*) is abundant throughout its range in the eastern provinces, but is not found west of the province of Ontario.

The wood is used chiefly for rough, cheap construction especially house framing. It is fairly strong but has many objectionable features from the woodworker's standpoint, being rough, harsh, splintery, and difficult to work. It is not durable in contact with moisture but supplies the demand for a cheap, strong material for many purposes. The wood is also used for railway ties, poles, mining timber, pulpwood and firewood. Its bark is a valuable source of tannin. The western hemlock has few of the objectionable technical features of its eastern relative. This tree (*Tsuga heterophylla*) is found in Canada only in the province of British Columbia, and is becoming more valuable each year as the prejudices due to its name are overcome. The two trees in Canada in 1914 yielded over eight per cent of the total lumber production of the country.

There is only one balsam fir in eastern Canada (*Abies balsamea*). The tree is found from Labrador to Alaska covering practically the same geographical distribution as the white and black spruces. Its wood is sawn into lumber to take the place of more valuable woods for rough construction as it has few technical qualities which would recommend it for any other use as lumber. The purpose for which the wood of this tree is best suited is in the manufacture of wood pulp for paper making. The tree, in nature, occurs mixed with spruce and it is cut and marketed with that wood. Balsam fir has the requisite length and toughness of fibre for pulp making and in spite of the fact that it gives a slightly lower yield of pulp per cord and contains a higher percentage of resin than spruce its use is increasing. In 1914 one fourth of the pulpwood cut was of this species.

There are three western balsam fir species whose wood is very similar to that of *Abies balsamea*. The most important of these at present is probably the Alpine fir (*Abies lasiocarpa*) Where these western species are utilized their wood is put to similar uses to those of the eastern species. They are confined in their distribution to the Rocky Mountains and the Pacific Slopes.

There are only two species of the genus *Thuya*, commonly called "Cedar" in Canada. They are both of great commercial importance, each in its own region, as their ranges do not overlap. The wood of the cedars

is the most durable of the conifers of the Dominion. The eastern tree; white cedar (*Thuya occidentalis*) is found from the Atlantic to the south-eastern part of Manitoba. It does not extend as far north as some of the other conifers and is nowhere very plentiful, being confined to moist situations. The wood has become so scarce in Eastern Canada that the supply is not equal to the demand and the market for a light, durable wood is being partly filled by imported cypress (*Taxodium distichum*) from the southern United States. Cedar is preferred to all other native woods for shingles and all structural work exposed to moisture. In spite of the fact that the wood is not strong, its great durability in contact with the soil makes it a valuable railway tie material. In 1914, this wood came second on the list for railway ties purchased by Canadian railways. It is used in enormous quantities both locally and for export for fence-posts and its use for this purpose is largely responsible for the increased scarcity of the lumber, as young trees are used before they have time to reach saw log sizes. The western red cedar (*Thuya plicata*) is one of the giants of the Pacific Coast, being only surpassed in size by Douglas fir. Its wood is sawn into lumber of large dimensions and is made into shingles to a greater extent than any other wood in Canada.

Birch is Canada's most important hardwood and one of the few woods of this class where the exported material exceeds that imported. There are at least seven native species but only two are worthy of any detailed discussion. The yellow birch (*Betula lutea*) is the source of the most valuable birch lumber used for flooring, furniture, cabinet work and vehicle stock. The tree grows only in Ontario, Quebec and the Maritime Provinces and does not reach commercial dimensions north of the height-of-land between the St. Lawrence River and Hudson Bay. Its wood is hard, heavy, strong and tough but is not durable in contact with moisture.

The paper birch (*Betula alba* var. *papyrifera*) has a much wider distribution and is more abundant in its range, being common from the Atlantic to the Rocky Mountains. Its wood is softer, weaker and less durable than the yellow birch and is not at present of great commercial value. It is usually considered as a " weed tree ", as it springs up with marvelous alacrity on burned-over or cut-over areas. It has certain qualities of toughness and compactness which will in time win it a place among our more important woods when these qualities are better understood. The tough, resinous bark of this tree has supplied the aborigines for centuries with the material for covering their famous " birch bark canoes ".

Of the three native tamarack or larch species, two are worthy of note. The eastern tamarack (*Larix laricina*) is found in every province in the Dominion in swampy situations. Its wood is hard, strong and durable, being similiar to that of Douglas fir and the Southern hard pines. The western larch (*Larix occidentalis*) is more important commercially. It is found only in British Columbia but grows on better sites and reaches greater size than the eastern tree. The wood of these two species together is cut into lumber and also used for railway ties, coming third on the list in 1914, and for mining timbers and fencing.

The maple, whose leaf is the national emblem of Canada, is our second most important hardwood and is represented in Canada by nine or more species scattered from the Atlantic to the Pacific. Only one species however can be considered here. The sugar maple or hard maple (*Acer saccharum*) produces the most valuable lumber and, like birch, is used for furniture, vehicle stock and interior house finishing. The sap of this tree is the source of maple syrup and sugar.

Basswood (*Tilia americana*) is a valuable wood for cabinet work of all kinds but being restricted in distribution and in great demand the available supply has almost disappeared, It formed less than one per cent of the lumber produced in Canadian sawmills in 1914.

Elm, represented by three species in Canada, is a valuable vehicle wood. Beech, ash, oak, butternut, chestnut, hickory, cherry, black walnut, tulip, black gum, red alder, sycamore and sassafrass are all valuable woods and are still sawn into lumber in Canada, but in most cases the supply, which was never large, has dwindled almost to insignificance.

The poplar species, of which there are seven native to Canada, are for the most part considered as "weed trees" but, like paper birch and jack pine they produce great quantities of material which will eventually become valuable at least for some purpose when their qualities are better appreciated and when the scarcity of the more valuable of better understood woods will make their careful utilization imperative.

The following is a list of the important tree species of Canada and some of the minor ones. The nomenclature is in accordanc with GRAYS'S BOTANY and the common names given are those used by the Forestry Branch of the Department of the Interior. These latter names have been chosen with the the idea of conforming as closely as possible with names in common use by lumbermen and foresters in Canada but where duplication of names has given rise to confusion the most suitable name has been chosen.

## CANADIAN TREE SPECIES.

### I. — Conifers.

| | | |
|---|---|---|
| *Pinus* | *Strobus* | White pine |
| » | *monticola* | Western white pine |
| » | *flexilis* | Limber pine |
| » | *albicaulis* | White-barked pine |
| » | *ponderosa* | Western yellow pine |
| » | *rigida* | Pitch pine |
| » | *resinosa* | Red pine |
| » | *Murrayana* | Lodgepole pine |
| » | *Banksiana* | Jack pine |
| *Larix* | *laricina* | Tamarack |
| » | *occidentalis* | Western larch |
| » | *Lyallii* | Alpine larch |
| *Picea* | *Mariana* | Black spruce |
| » | *rubra* | Red spruce |
| » | *canadensis* | White spruce |
| » | *Engelmanni* | Engelmann spruce |

| | |
|---|---|
| » *sitchensis* | Sitka spruce |
| *Tsuga canadensis* | Hemlock |
| » *heterophylla* | Western hemlock |
| » *Mertensiana* | Black hemlock |
| *Pseudotsuga mucronata* | Douglas fir |
| *Abies balsamea* | Balsam fir |
| » *amabilis* | Amabilis fir |
| » *grandis* | Lowland fir |
| » *lasiocarpa* | Alpine fir |
| *Thuya occidentalis* | Cedar |
| » *plicata* | Western cedar |
| *Chamæcyparis nootkatensis* | Yellow cypress |
| *Juniperus communis* | Juniper |
| » *virginiana* | Red juniper |
| » *scopulorum* | Rocky Mountain juniper |
| *Taxus brevifolia* | Western yew. |

## II. — Hardwoods.

| | |
|---|---|
| *Juglans cinerea* | Butternut |
| » *nigra* | Black walnut |
| *Carya cordiformis* | Bitternut hickory |
| » *ovata* | Shagbark hickory |
| » *alba* | Mockernut hickory |
| » *glabra* | Pignut hickory |
| *Populus tremuloides* | Aspen |
| » *grandidentata* | Large-toothed aspen |
| » *balsamifera* | Balsam poplar |
| » *angustifolia* | Narrow-leafed cottonwood |
| » *acuminata* | Lance-leafed cottonwood |
| » *trichocarpa* | Black cottonwood |
| » *deltoides* | Cottonwood |
| *Salix* sp. | Willow |
| *Carpinus caroliniana* | Blue beech |
| *Ostrya virginiana* | Ironwood |
| *Betula lenta* | Sweet birch |
| » *lutea* | Yellow birch |
| » *populifolia* | White birch |
| » *alba* var. *papyrifera* | Paper birch |
| » *occidentalis* | Western birch |
| » *alaskana* | Alaska birch |
| » *fontinalis* | Mountain birch |
| *Alnus sitchensis* | Sitka alder |
| » *oregona* | Oregon alder |
| » *tenuifolia* | Mountain alder |
| » *incana* | Spreckled alder |
| *Fagus grandifolia* | Beech |
| *Castanea dentata* | Chestnut |
| *Quercus rubra* | Red oak |
| » *palustris* | Pin oak |
| » *coccinea* | Scarlet oak |
| » *velutina* | Black oak |
| » *alba* | White oak |

| | |
|---|---|
| » *Garryana* | Garry oak |
| » *stellata* | Post oak |
| » *macrocarpa* | Burroak |
| » *bicolor* | Swamp white oak |
| » *prinoides* | Dwarf Chinquapin oak |
| » *prinus* | Chestnut oak |
| » *Muhlenbergii* | Chinquapin oak |
| *Ulmus americana* | White elm |
| » *racemosa* | Rock elm |
| » *fulva* | Red elm |
| *Celtis occidentalis* | Hack berry |
| *Morus rubra* | Red mulberry |
| *Magnolia acuminata* | Cucumber tree |
| *Liriodendron tulipifera* | Tulip tree |
| *Asimina triloba* | Papaw |
| *Sassafras variifolium* | Sassafras |
| *Hamamelis virginiana* | Witch hazel |
| *Platanus occidentalis* | Sycamore |
| *Pyrus americana* | Mountain ash |
| *Amelanchier canadensis* | Service berry |
| » *spicata* | Saskatoon |
| *Cratægus* sp. | Hawthorn |
| *Prunus nigra* | Canada plum |
| » *pennsylvanica* | Bird cherry |
| » *emarginata* | Bitter cherry |
| » *virginiana* | Choke cherry |
| » *demissa* | Western choke cherry |
| » *serotina* | Black cherry |
| *Cercis canadensis* | Red bud |
| *Gymnocladus dioica* | Kentucky coffee tree |
| *Rhus typhina* | Staghorn sumach |
| *Acer spicatum* | Mountain maple |
| » *pennsylvanicum* | Striped maple |
| » *macrophyllum* | Broad-leaved maple |
| » *circinatum* | Vine maple |
| » *Douglasii* | Dwarf maple |
| » *saccharum* | Sugar maple |
| » *saccharinum* | Silver maple |
| » *rubrum* | Red maple |
| » *Negundo* | Manitoba maple |
| *Tilia americana* | Bass wood |
| *Nyssa sylvatica* | Black gum |
| *Cornus florida* | Flowering dogwood |
| » *Nuttallii* | Western dogwood |
| *Arbutus Menziesii* | Madrona |
| *Fraxinus quadrangulata* | Blue ash |
| » *nigra* | Black ash |
| » *americana* | White ash |
| » *pennsylvanica* | Red ash |
| » *pennsylvanica* (var. *lanceolata*) | Green ash |
| » *oregona* | Oregon ash |

SECOND PART.

# ABSTRACTS

## AGRICULTURAL INTELLIGENCE

### GENERAL INFORMATION.

DEVELOPMENT OF AGRICULTURE IN DIFFERENT COUNTRIES

956 – **The Agricultural Products of Portuguese Guinea.** — MACHADO DA FONSECA JOAQUIM., in *Revista Agronomica*, XIth year (2nd Series), Vol. 2, Nos. 13-16, pp. 43-81, 1 diagram + 1 map. Lisbon, 1915.

Report on a voyage of agricultural exploration carried out with a view to organisation of the colonial agricultural services in the province of Portuguese Guinea, by the order of the Portuguese Government, together with replies to a detailed list of questions prepared by the Government of the Colony and the General Direction of Colonies.

SOIL. — The cultivable soils of this province are generally clayey-humous-limestone. They are sometimes, but rarely, richer in clay; others of them again (those of Cachen) are rather sandy. Being generally very fertile, they need no manuring, and are admirably adapted for the intensive cultivation of all tropical plants. From 10 analyses of soils made at the superior Agronomic Institute at Lisbon the following data representing extremes are obtained :

*Composition of Soils in Portuguese Guinea.*

| | ‰ | | ‰ |
|---|---|---|---|
| Fine earth | 958-1000 | Nitrogen | 0.98-2.5 |
| Moisture | 12- 48 | Phosphoric acid | 1.47-3.9 |
| Organic matter | 32- 146 | Potash | 0.5-1.72 |

The predominating cultivations are the following :

CEREALS. — Rice and maize form the bases of native foods. Mountain rice is cultivated on the following method : after the first rains all the weeds are pulled up and burnt, the ashes spread over the land, the latter

being given a superficial cultivation, the seed is sown broadcast, and weeding is continued until harvest. Paddy is treated in the following manner: from the end of May to June the seeds are sown; the plantlets are transplanted one by one when they have reached a height of 6 to 8 inches; the rice field is kept free from weeds and is flooded. With the weeds which have been pulled up and afterwards stacked small dykes are made. The crop is got in from December to March. To sow 1 acre, from 11 ½ to 12 bushels of rice are used. The average crop is from 44 ½ to 47 bushels per acre. The market price is 1*s.* 2 ½ *d.* per gallon for the paddy, and 1 *s.* 7 ½ *d.* per gall. for the rice not in husk. There are also grown: *Zea Mays*, *Pennisetum typhoideum*, *Andropogon Sorghum*, etc.

Leguminous Crops. — Beans are chiefly grown.

Starch Crops. — Sweet and bitter cassava and the sweet potato are chiefly cultivated.

Textile Plants. — The cotton plant is grown, though to a limited extent, in the regions of Farim, Bolama, Bafatà, Buba and Cacine in consequence, undoubtedly, of a distribution of seeds made some years ago by the Government. In the region of Farim, the writer observed specimens of *Gossypium herbaceum* and *G. barbadense* of excellent growth and abundantly productive. With the cotton the natives manufacture certain articles for their personal use.

Crops yielding Oil. — *Arachis hypogea* in cultivated to a large extent on the following method: After the first rains, that is from the end of May to the month of July, the soil is superficially dressed, after which sowing is done in rows at the rate of 40 to 44 ½ lbs. of seed per acre, the seed being afterwards covered. The crop is taken off from December to March. The average unit production is 1 340 to 1 600 lbs. per acre. The average selling price on the market is 0.73 *d.* per lb. The ground nut is not cultivated by the natives alone, but also on lands granted to whites. *Sesamum indicum* is used, but is not cultivated.

The trees or shrubs producing oil seeds or fruits are: *Elaeis guineensis*, *Carapa Touloucouna*, *Ricinus communis*, and, in addition, a shrub termed by the natives "arcus", etc. *Elaeis guineensis* forms very extensive forests. It is not very productive however (13.2 lbs of kernels and 0.66 gallons of oil per tree), and is poor in growth owing to the incisions made with the object of extracting the sap, with which palm wine is manufactured. The exportation of coconuts is carried on to some small extent, but could be very much extended.

Rubber Plants. — The wild rubber producing plants (*Landolphia Hendelottii* and *L. senegalensis*) are utilised direct by the natives in the regions of Farim and Batafà. The latex is gathered from November to May, by the use of primitive and destructive methods, namely, by incision, removal of the bark or felling of the trees. It is coagulated by leaving it exposed to the air in the presence of salt and tamarind juice which is found in abundance. It is dried in the sun, then shaped into balls and sold in this form. The dried rubber fetches 3 *s.* and the "green" rubber 1 *s.* 5 *d.* per lb. There are no rubber plantations in the true sense of the word. The

rubber is exported from Portuguese Guinea to Hamburg, Marseilles and Havre. In 1912 there were exported 500.300 lbs. of a declared value of some £ 79 410. The writer believes that by prohibiting the burning of the wood and teaching the natives the use of a more rational method in gathering and coagulating, this production could be greatly increased and improved.

STIMULATING AND NARCOTIC PLANTS. — *Coffea arabica* and *C. liberica* grow in the regions of Bolama, Buba and Cacine; *Theobroma Cacao* at Bijagós; *Sterculia acuminata* at Cacine. These plants thrive excellently but produce little owing to complete absence of cultivation. Recently the "Companhia Commercial Agricola dos Bijagós" began cocoa cultivation by means of imported seeds. The results hitherto obtained justify hopes of great success.

SUGAR PLANTS. — The sugar-cane is cultivated in the regions of Farim and Batafà, which, according to the writer, are best adapted for this cultivation. The mean annual temperature there is from 77 to 78.8° F. The rainy season occurs between May and October, and for the rest of the year the weather is dry; the lands are chiefly low and moist, of clayey humus-limestone composition. Several navigable streams can supply non-brackish water for irrigation, and also serve as easy and cheap ways of communication. The population is sufficiently dense to furnish the necessary labour. In the plantations, all of which are conducted by settlers, the sugarcane cuttings are generally planted at 20 inches distance in furrows 15 $^3/_4$ to 23 $^1/_2$ inches wide and 12 to 20 inches deep, 3 ft. 3 in. to 4 ft. 11 in. apart. For multiplication the best shaped canes, still green, are selected. The middle part is reduced to fragments which are placed aslant in the furrow. The sowing work is carried out from March to May, and no manure is used. The after-management consists in weeding and keeping the irrigation ditches clear. This is a system which may be described as natural, because the sugar cane is grown along the rivers. The waters of the latter are forced up once a day by high tide, and rise to such an extent as to fill the irrigation ditches, which are arranged perpendicularly to the bed of the streams in question. Eight months after sowing, the cane is ripe. The crop is gathered from December to May. The plantation is renewed every 3 years, that is, after 3 crops. No sugar is manufactured. The whole of the cane grown is devoted to the production of alcohol. The juice yield of the cane is 48.5 % and the sugar yield 13%. This region is admirably suited for sugar-cane growing, but is cultivated by 15 settlers only over a total area of 84 acres. The natives do not carry on this cultivation. In 1913, 790 675 lbs. of sugar were imported into Portuguese Guinea.

HORTICULTURE. — Many green vegetables are cultivated, which grow with surprising rapidity.

ARBORICULTURE AND SYLVICULTURE. — Among the most common fruit trees, the writer mentions: *Anacardium occidentale*, the pine-apple, *Psidium Guajava* (cultivated), orange, lemon, *Carica Papaya*, all cultivated, then: prickly pears, tamarind, banana and *Zizyphus Jujuba*, utilised, but not cultivated.

The regions of Farim and Batafâ are exceedingly rich in timber trees, such as: *Swietenia Mahogani*, *Hasskarlia didymostemon*, *Milletia* spp. ("pau ferro"), *Dalbergia melanoxylon*, *Bombax* spp., *Borassus flabellifer* (of which the fibres are also utilised), *Adansonia digitata*, the fruit of which is medicinal, etc.

957 – **Agricultural Education in Chile. — The Agronomic Institute of Santiago.** — VALDIVIA URBINA, in *La Vie agricole et rurale*, VIth year, No. 26, pp. 465-466. Paris, June 24, 1916. AGRICULTURAL EDUCATION

In 1842, under the auspices of the *National Society of Agriculture* there was founded in Chile the first practical School of Agriculture, the direction of which was entrusted to a Spanish specialist, DON MANUEL DE ARANA BORICA.

Having been reorganised later on by an Italian scientific agriculturist, DON LUIS DE SADA, it was established on a fine farm covering more than 330 acres situate on excellent alluvial soil about 10 feet deep, the said farm having been bought by the Government from General DON MANUEL BULNES, on the very outskirts of Santiago, the capital of Chile.

This institution was organised on the model of the European schools of agriculture, and was given the name of *Quinta Normal*, "Normal Farm".

Higher agricultural education began in 1873, by the creation, in the University, of a Chair of agriculture occupied by an agricultural engineer from Grignon, a Frenchman, M. LE FEUVRE; there was afterwards created a chair for the science of livestock-breeding etc., which was filled by another French agricultural engineer, M. JULES BESNARD.

In 1874 there was founded at the *Quinta Normal* an establishment for higher agricultural education which assumed the name of "agronomic Institute", and of which Messrs. LE FEUVRE and BESNARD undertook the direction.

After numerous exhibitions organised by the *National Society of Agriculture*, and which afforded a clear view of the progress achieved in the agricultural department, the Ministry of Public Works created a department for the Promotion of Agriculture and the Inspection of Agricultural Education.

At the present time, all the agricultural Services are under the Ministry of Public Works and subject to supervision by the Inspection service just mentioned, except with regard to the Forest Inspection Department created recently, which is directly subordinate to the Ministry of Public Works.

These services comprise:

An Office of Agricultural Statistics; the Agronomic Institute of Santiago; five Practical Schools; a Station of scientific Agriculture, Oenology, Plant Pathology, and Meteorology; a Veterinary Hospital; four Services of Regional Agricultural Engineers, who play a part similar to the French departmental professors.

The area occupied by the "Quinta Normal" of Santiago is divided as follows (1 hectare = nearly 2 ½ acres).

| | Hectares | Ares | Centiares |
|---|---|---|---|
| Park land | 26 | 93 | 13 |
| Glass houses and winter gardens | — | 49 | 33 |
| Experimental fields | — | 35 | 78 |
| Zoological garden and Veterinary hospital | 2 | 31 | 95 |
| Pleasure garden | 1 | 24 | 58 |
| Kitchen and Fruit garden | 2 | 34 | 90 |
| Fruit tree nurseries | — | 26 | — |
| Orchard | 1 | 77 | 20 |
| Forest and ornamental trees | 5 | 6 | 65 |
| Vineyard | 20 | 97 | 59 |
| Practical schools and plots annexed | 2 | 68 | 41 |
| Stables and sheds | — | 65 | 82 |
| Groves, thickets, etc. | 2 | 59 | 4 |
| Annual forage plants | 8 | — | — |
| Temporary grassland | 22 | — | — |
| Grain crops | 6 | — | — |
| Weeded crops | 3 | 6 | — |
| Industrial plants | 4 | — | — |
| Gardens for Live-stock shows | 2 | 31 | 50 |
| Botanical gardens | 2 | 70 | 27 |
| Astronomical observatory | 1 | 69 | 1 |

The object of the Institute is to train up : farmer landowners or managers possessing the necessary scientific knowledge for the best working of the soil: technical managers for agricultural industries ; directors for the public departments connected with agriculture ; professors and assistants for agricultural education at the Institute itself and in the practical schools.

Students are admitted after a competition from which only bachelors of science are exempted. Candidates must be seventeen years old at least.

The period of study is four years, after which those students who have maintained a sufficient average standard receive the diploma of Agricultural Engineer.

The school year begins in March and ends in December.

The Institute, in addition to regular students, admits free students desirous of following a special course in one subject; the duration of their stay in the Institute is limited to two years.

Education is entirely free, as is indeed the case in all educational establishments in Chile.

It comprises the following courses :

1. General agriculture: (*a*) agricultural climatology ; (*b*) study of soils, manuring and manures ; (*c*) plant reproduction.
2. Special agriculture: (*a*) agricultural work ; (*b*) cultivation of food plants, industrial plants and grasslands.
3. Arboriculture for forest, fruit and ornamental trees, and horticulture.
4. Vine-growing and wine-making.
5. Plant physiology and micrography.
6. Plant pathology and agricultural entomology.
7. Sylviculture.
8. Applied organic chemistry.
9. Agricultural chemistry.
10. Analytic chemistry (quantitative).

11. Animal anatomy and physiology.

12. Elements of veterinary medicine: (*a*) pathology and pathological anatomy; (*b*) materia medica; (*c*) veterinary clinic.

13. Livestock: (*a*) external structure of animals; (*b*) general science of livestock; (*c*) applied zootechny; (*d*) forage and rational feeding of cattle; (*e*) poultry-keeping, bee-keeping and silkworm-rearing.

14. Farm engineering: (*a*) surveying, levelling, general mechanics, agricultural mechanics (agricultural machinery and motors); (*b*) hydraulics (irrigation, drainage, etc.); (*c*) farm buildings, geometric drawing, freehand drawing, topographical and mechanical drawing.

15. Agricultural industries (technology) comprising the industries of greatest interest to the country: (*a*) manufacture of alcohol; (*b*) dairy industry; (*c*) food preserves; (*d*) textile material, etc.

16. Applied hygiene.

17. Rural and *consular* legislation.

18. Economics, farm accounts and consular information.

For demonstrations and practical applications of the courses, the Institute possesses, in addition to a library of 6,000 volumes, which receives a large number of agricultural publications, a museum of agricultural products, appliances and machinery. Important annexes are made up of:

Experimental field. Weather observatory. Laboratories of: technology, with models of technological plant; agricultural chemistry; plant botany and pathology; seed tests and agricultural distillery. Dairy serving both for cheese and butter making. Vineyard with wine store and wine cellar. Vine nursery. Orchard. Kitchen garden. Hot-house for plant propagation. Section for fruit, forest and ornamental shrubs. Section for the growing of the principal plants under field conditions (industrial, food and forage). Section concerned with domestic animals for breeding and farm work. Stud animal section. Byre for livestock experiments and a veterinary hospital.

From the second year onwards the courses are supplemented by visits to farms, factories of agricultural products etc., in which the students are accompanied by the professors and assistants.

The costs of these excursions are defrayed by the Government, which appropriates a special credit for that purpose every year and places first-class tickets at the disposal of the Institute.

Every year the Institute organises an excursion of one month for fourth year students, with the object of making them acquainted with the different agricultural regions of the country and their special qualities.

The State, on that occasion places at the disposal of the students a first class carriage, one half of which is converted into a sleeping-car, and an ordinary carriage converted into a kitchen and restaurant car, which carriages can be hooked on to any train.

The students are put through monthly examinations and general examinations at the end of each school year. Those among them who have secured a sufficiency of marks at the general examinations in the previous years undergo a final general examination at the close of the fourth year.

They are furthermore required to produce a report proving that they have been through a probationary period on a farm. Every year the students who have passed their graduation examination are sent on a mission abroad at the Government expense.

958 - **Reorganisation of Agricultural Education in Colombia.** — *Revista agricola, Organo del Ministerio de Agricultura y Comercio*, IInd Year, No. 2, p. 65. Bogota, February 1916.

Decree No. 123 of the 31st January 1916 provides for the reorganisation of the National Agricultural and Veterinary Institute under the name of " Instituto nacional de Agronomía ". The following are to form part of the National Agronomic Institute : the practical schools of Agriculture, the stations of scientific agriculture and experimental fields, founded in the capital or in other localities of the Republic. The director of the School and the technical chiefs of the experimental services of the Station of scientific agriculture will form the technical Council of the corresponding Station which must reply to enquiries by the Ministry of Agriculture and Commerce, as well as to those of the public, on questions of scientific agriculture, livestock and protection of plants against diseases and pests.

## CROPS AND CULTIVATION.

SOIL PHYSICS, CHEMISTRY AND MICROBIOLOGY

959 - **Contribution to the Study of the Forms in which Phosphoric Acid occurs in the Soil.** — JEGOROV M. A., in *Южно-русская сельско-хозяйственная Газета* (*The Agricultural Gazette of Southern Russia*). Nos. 13-14 and 15, pp. 4-5 ; 4-5. Kharkov, April, 1916.

In the study of the problem of the phosphoric acid of the soil, the question of the forms in which it occurs is fundamental, and by a knowledge of them we may attain to a solution of the important problem of the dynamics of soluble phosphoric acid in the soil in relation to the cultivable conditions of this latter. Starting out from this idea, the above writer, together with J. J. STOZKIJ and P. P. GRETCHIANINOV, conducted experiments with a view to determining the quantity of organic phosphoric acid contained in " podzol " and " tchernoziom " earths.

The investigators adopted the following method of separation, which perfectly well answers the purpose, as was shown by 2 years of work ; the earth, first washed with 3 % hydrochloric acid, is afterwards treated with a 3 % solution of ammonia. The resulting solution is passed through porous filters, and the filtrate precipitated with acetate of lead. The precipitate is carefully washed, treated with sulphuretted hydrogen to eliminate the lead, and dissolved again in dilute ammonia. It is then filtered, the filtrate is concentrated and afterwards treated with ether, which separates the organic combination of phosphorus which it is proposed to study from the mineral phosphoric compound which might be present.

The soils used for these experiments were : " Podzol " from the farm of the Agronomic Institute of Moscow, with an average of 0.0532 % of phosphoric acid ; the " tchernoziom " of the government of Kursk, with an average of 0.110 % ; and " tchernoziom " of the government of Ufa, with an average of 0.145 %. The ammoniacal solutions contained respectively : 52.7, 55.18 and 30.41 % of the total phosphoric acid of these earths, in other words, about one half in the case of the first two, and one third in the last.

The workers succeeded in obtaining considerable quantities of organic phosphoric acid. In one case it represented 17.67 % of the total phosphoric acid content of the soil, and in another, 10 %. There is reason to believe that higher percentages would be obtained in proportion as the method applied to this investigation is improved.

By these means, in the "podzol" and "tchernoziom" the presence of a considerable proportion of phosphoric acid in the form of an organic combination which appears to be one of the nucleinic acids was definitively established. The ascertainment of this fact does not yet furnish the required answer to the question of the dynamics of phosphoric acid in the soil. Nevertheless, in view of the fact that J. J. STOZKIJ succeeded in proving that with 3 % hydrochloric acid not only mineral but also organic phosphoric acid is extracted from the soil, and that probably a substantial proportion of this mineral phosphoric acid in the hydrochloric solution is not of mineral but of organic origin, and that it becomes mineral in the process of evaporation of this solution, then the importance, not merely theoretical but also practical, of investigations of this kind will become clearly evident. Bearing this in mind, and also the fact that the best results on "tchernoziom" are obtained by means of phosphate manure in spite of the richness of that soil in phosphoric acid, the writer suggests the possibility of overcoming the condition of inertia of the large stores of phosphoric acid contained in the soil by a knowledge of the dynamics to which its presence therein is subject.

Finally, it may be presumed that the organic combinations of phosphorus differ according to the soils, and it is highly desirable that investigators should in a greater degree devote their attention to this point.

960 – **Method of Sterilisation and Chloroforming of the Soil in the Study of the Properties of "Tchernoziom".** — SKALSKIJ S. in *Южно-русская сельско-хозяйственная Газета* (*The Agricultural Gazette of Southern Russia*), Year XVIII, Nos 1; 2; 5; 7 and 9; pp. 7-8; 6-7; 5-7; 9-10. Kharkov, January-February-March 1916.

On the basis of his experiments carried out in the laboratory of bacteriological chemistry of the agricultural experiment Station of Ploty (Russia) the writer proves that under the influence of fertilisation and chloroforming the fertility of the tchernoziom increases. He ascertains the degree of such increase, and, to the extent permitted by the results obtained, explains the modifications which take place in the sterilised and chloroformed tchernoziom and which produce the increase in its fertility. The experiments were conducted in the following way:

Small WAGNER vessels to the number of two for each experiment were filled with tchernoziom, under different conditions of cultivation: 1) an April fallow (that is, fallow ploughed in April); 2) a soil cleared several years since; and 3) a 3 year-old lucerne soil. From each of these soils two layers were taken, namely the arable (from 0 to 17.7 cm. deep) and the layer immediately below (from 17.7 to 35.5 cm. depth). With the samples of soil mentioned 6 set of vessels were filled. The vessels of the first series, which were to serve as controls, were filled with the normal soil, that is to say neither sterilised nor chloroformed; those of the second series, by

which it was proposed to determine the content of assimilable phosphoric acid, were filled with samples manured with potassium nitrate and magnesium sulphate ; and those of the third, which were for the purpose of ascertaining the content of assimilable nitrogen, contained samples manured with acid potassium phosphate ($KH_2PO_4$) and sulphate of magnesia; those of the fourth received a complete mineral manuring, that is to say: potassium nitrate, acid potassium phosphate and magnesium sulphate ; in the vessels of the fifth series the sterilised earth was put, and in those of the sixth the chloroformed earth.

The sterilisation of the soil was carried out in vessels placed in an autoclave where they were subject to sterilisation by steam for one hour at a pressure of 2.5 atmospheres.

After cooling, the specimens sterilised in this way were watered with sterilised water to the *optimum* point of humidity.

The chloroforming was carried out by placing the corresponding samples in bottles with ground stoppers and adding to each sample 50 cc. of chloroform. After they had been left for three days in the bottles the samples were taken out, and, when the chloroform had completely evaporated, were placed in the vessels. The vessels having been prepared in this way, oats were sown in them, after the seeds had been previously treated with an 0.2 % solution of formalin and washed with distilled water ; the seeds were then germinated in an incubator. In each vessel 8 seeds were put ; after germination only the four most vigorous plants were left.

During the entire period of growth, the plants were watered with rain water to the *optimum* of humidity, the water being supplied from below by means of a special tube fitted to each vessel. The results of the experiments as regards the fertility of the tchernoziom in the 6 series of specimens studied are summarised in the accompanying table.

This table contains no particulars as to the effects of the sterilisation of the layer immediately below the arable layer (from 17.7 to 35.5 cm in depth) nor of the cleared land, or the lucerne soil, because on the sterilised samples of these soils the plants died in the course of their period of growth. The writer partly discerns the causes of this phenomenon in the fact that the sterilised soils, during the first few days, clearly exhibit a low capacity of water absorption, which proves that the sterilisation of the soil by means of steam produces not only biological but also physico-chemical changes. In order to obviate this drawback it is advised that the soil should be watered with distilled water to the optimum point of humidity for 6 or 7 days ; if this precaution is taken the young plants suffer less. Passing on now to the general considerations emerging from the figures in the table, it is seen that the sterilisation of the tchernoziom brings with it a considerable increase in the production of the total vegetable mass, and that the effect of sterilisation, disregarding slight fluctuations one way or the other, is the same as that produced by complete mineral manuring.

As regards the chloroforming, it also brought about an increase in the total vegetable mass produced ; its effect nevertheless was less considerable as compared with sterilisation and complete mineral manuring. What

*Fertility of Tchernoziom non-manured, manured, sterilised and chloroformed.*

| Manures applied and mode of treatment of the samples of tchernoziom | Average weight in gr. of the total vegetable mass (seed and straw) | | | | Ratio between the vegetable masses, that of the control series being taken as the unit | | | |
|---|---|---|---|---|---|---|---|---|
| | on april fallow (layer from 0 to 17.7 cm) | on april fallow (layer from 17.7 to 35.5 cm) | on cleared land (layer from 0 to 17.7 cm) | on 3 years lucerne soil (layer from 0 to 17.7 cm) | on april fallow (layer from 0 to 17.7 cm) | on april fallow (layer from 17.7 to 35.7 cm) | on cleared land (layer from 0 to 17.7 cm) | on 3 years lucerne soil (layer from 0 to 17.7 cm) |
| 1. Unmanured. . . . . | 12.27 | 6.48 | 7.59 | 12.21 | 1.00 | 1.00 | 1.00 | 1.00 |
| 2. Nitrogenous manuring . | 13.14 | 5.51 | 7.07 | — | 1.06 | 0.85 | 0.93 | — |
| 3. Phosphate » . | 18.45 | 16.41 | 10.09 | — | 1.49 | 2.53 | 1.32 | — |
| 4. Complete mineral » . | 33.64 | 33.60 | 27.09 | 28.45 | 2.74 | 5.18 | 3.56 | 2.33 |
| 5. Sterilisation . . . . . | 36.21 | 31.55 | 30.69 | 27.69 | 2.95 | 4.86 | 4.04 | 2.26 |
| 6. Chloroforming . . . . . | 21.08 | 22.39 | — | — | 1.71 | 3.45 | — | — |

are the causes of this increase in fertility? In order to reply to this question the writer carried out researches on the bacterial flora of the soils under study and determined the chemical composition of the sterilised samples, paying special account to two elements: phosphorus and nitrogen. Two cultures were made, one on agar, the other on gelatine; for each, peptonised beef bouillon, diluted to 0.001 in the one case and in the other to 0.0001, was utilised as the nutrient liquid. The calculation of the number of bacteria was made in Petri dishes in reference to one gram of absolutely dry soil. These experiments were only made with April fallow tchernoziom

The results of these calculations, compiled in several tables, prove that the bacterial flora of chloroformed and sterilised tchernoziom is incomparably more numerous than the normal; that it is more numerous in the arable soil than in the layer below, and that in the case of sterilisation, it is more numerous on agar than on gelatine. For instance, for the normal samples of the arable layer in the culture on agar, with a dilution to 0.001, the number of bacteria before the experiments was 160 000 per one gram of absolutely dry soil; after the experiments, 167 000, or an insignificant increase. In the soil chloroformed after the experiments the number of bacteria was 3 152 000 and in that sterilised it was 2 138 000. Considering the case of the chloroforming of the tchernoziom, and laying stress on the fact that it creates conditions in the soil which lead to a more energetic multiplication of the bacteria, the writer believes that this action of the chloroform must be the principal cause which, in chloroformed soils, leads to the increased production of vegetable mass, because with the more intense development of the bacterial flora those processes which enrich the soil in fertilising elements, especially nitrogen and phosphorus, also intervene with greater intensity. The enrichment of the soil in this latter element phosphorus, takes place, according to the writer, at the expense of its organic

forms which are decomposed under the action of a highly numerous bacterial flora and give rise to the transformation of phosphorus from the non-assimilable state into the assimilable state. On the other hand, the insoluble mineral phosphates pass into the soluble state, as was proved by STOKLASA, under the action of the carbonic, formic, butyric and acetic acids produced by the organic substances formed by the multiplication of the bacteria. With regard to the nitrogen, the increase in this element must be attributed to the fixation of atmospheric nitrogen by the bacteria, and to the organic substances of the soil.

Passing on to sterilisation, it is useful to note that the bacteria flora of sterilised tchernoziom exhibits one peculiar feature, namely, it develops much less readily on gelatine than on agar ; according to the analysis made by the writer, it is constituted by the microbes of the air, and therefore it cannot play an important part in the increase of the fertility of the soil. In order to study the cause of this increase the writer examined the quantity of phosphoric acid soluble in 2 % acetic acid contained in the sterilised and the non-sterilised soils, and he found that the sterilisation results in a substantial increase of soluble phosphoric acid ; in the arable strata the increase varies between 87.87 and 120.67% and and in the strata lying beneath the arable layer, from 47.05 to 76.54%. Among the sources contributing to the increase of phosphoric acid, the writer allots the first place to the nucleins, which contain 5.7 % of phosphorus and which, at the temperature of 150° C., decompose with liberation of phosphoric acid. The question of the nitrogen is not so clear as that of the phosphorus, because an equal quantity of it was observed both in the sterilised and in the unsterilised soils. It not being possible, however, to attribute an increase of fertility in the sterilised soils exclusively to the increase in soluble phosphoric acid, and taking into account at the same time the fact that by the sterilisation all the microbes were killed, and therefore it is not possible to assume the existence in the soil of the microbiological processes which result in the accumulation of assimilable nitrogen, the Author assumes here the influence of the decomposition of organic substances through the action of sterilisation.

The increase in the quantity of assimilable nitrogen in the sterilised soils was borne out by the fact that the plants, during the entire period of growth, were of a beautiful green colour even more intense than that of the sample which received complete mineral manuring.

The concrete outcome of the experiments is the following :

1) Researches into growth carried out on chloroformed samples of tchernoziom and supplemented by bacteriological and chemical investigations prove that the accumulation of the fertilising substances in the tchernoziom, which depends on the degree of vital intensity of the soil bacteria, does not, even under the best conditions of soil cultivation, supervene with the same intensity with which it might take place under other more favourable conditions.

2) Researches into growth, carried out in sterilised samples of the tchernoziom supplemented by bacteriological and chemical investigations,

render it clearly evident that tchernoziom is sufficiently rich in crude elements, both in the form of vegetable and animal residues and in other forms with which, under conditions favourable to the process of disintegration and synthesis brought about by bacteria, a remarkable storage of the fertilisable substances assimilable by plants may be created.



961 – **Study of the Nitrification of Different Leathers available for Agricultural Use, and Sulphurated Rape Cakes.** — GUILLIN (Director of the Laboratory of the Society of Agriculturists of France), in *Comptes Rendus de l'Académie d'Agriculture de France*, Vol. II, Year 1916, No. 27, pp. 760-769. Paris, 1916.

Crude tanned leather has long been regarded as a product which only decomposes slowly in the soil. During the last few years another kind of leather, chrome leather, has appeared on the manure market. This leather, owing to its almost white colour (pale green), is rarely sold under the name of leather, but is marketed in the form of shavings. This chrome leather, of non-putrescent substance, may *a priori* be regarded as not subject to rapid decomposition. Experiments were undertaken with the object of ascertaining whether this view was correct.

The attempt has been made to render the leathers more easily decomposable in the soil by various processes. The most usual of these processes is roasting; roasted leathers are in almost all cases rendered slightly acid by the addition of a small quantity of sulphuric acid, but this quantity is altogether insufficient to render their decomposition in the soil easier. Besides this, some manufacturers have sought to transform leather completely by dissolving it in sulphuric acid, afterwards saturating the excess of acid so as to obtain a manure in powder form put on the market under different names: azotine, nitrogene, etc. Two of these dissolved leathers were studied by the writer: for one, sulphuric acid was used in such a quantity as to convert the leather waste into a pasty mass. For the other, the quantity of acid used was greater and the mass was liquefied. The study related, in brief, to the comparative nitrification of tanned leather, chrome leather, roasted leather and leather dissolved in sulphuric acid in a paste and in liquid form, as well as the nitrification of sulphurated rape cake. Dried blood was taken as a standard of comparison.

*Composition of the Manures studied.* — The composition of the manures studied is shown by the following table:

| | Total nitrogen | Soluble organic nitrogen | Ammoniacal nitrogen |
|---|---|---|---|
| Dried blood | 11.72 % | 0.63 % | 0.26 % |
| Tanned leather | 8.15 | 0.25 | nil |
| Chrome leather | 8.87 | 0.11 | nil |
| Roasted leather | 6.77 | 0.17 | nil |
| Dissolved leather (paste) | 6.63 | 2.33 | 0.25 |
| Dissolved leather (liquid) | 7.36 | 2.81 | 1.18 |
| Sulphurated rape cake | 5.62 | 0.61 | nil |

*Mode of Procedure.* — The nitrification experiments were carried out with clayey-lime soil of the basin of Paris (Gournay, Seine-et-Oise); this

earth, which contained 0.115 gr. of nitric acid per kg., was rendered thoroughly homogeneous, then brought up to a moisture percentage of about 20 %, after which lots of one kilogram were taken from it. The different manures having been reduced to an exceedingly fine powder, a weight of each of them corresponding to 1 gr. of nitrogen was weighed off; each of these weighed quantities was thoroughly mixed with 1 kg. of earth. For each manure, three different preparations were made, in order to be able to ascertain the quantity of nitric acid formed, after different periods of experimentation. The nitric acid contained in the mixture of soil and manure was also determined after 1,2 and 5 months' contact. By way of control the same was done with 3 lots of one kg. of earth to which no manure had been added, and the following results were reached:

*Nitric acid contained in one kilogram of earth.*

| | After 1 month | Two months | Five months |
|---|---|---|---|
| Soil without manure | 0.145 gr. | 0.160 gr. | 0.326 gr. |
| Dried blood | 1.080 | 1.350 | 2.433 |
| Tanned leather | 0.166 | 0.190 | 0.404 |
| Chrome leather | 0.003 | 0.021 | 0.227 |
| Roasted leather | 0.220 | 0.265 | 0.523 |
| Dissolved leather (pasty) | 0.742 | 0.952 | 1.547 |
| Dissolved leather (liquid) | 0.990 | 1.200 | 2.015 |
| Sulphurated rape cake | 0.888 | 1.287 | 2.291 |

One of the results appeared to be altogether abnormal, namely that given by the mixture of 1 kg. of earth with about 11 gr. of chrome leather; not only was there no nitrification, but, a far more surprising fact, the preexisting nitrate disappeared. This rapid distruction of the nitrates was so complete as to surprise the writer, who wondered whether the loss of the nitric acid during the course of its determination, was owing to the presence of chrome in the exhausting liquid. He therefore deemed it desirable at the same time to carry out a chemical control of his method of estimation and also an agricultural control.

*Chemical Control.* — In order to ascertain the proportion of nitric acid, the procedure adopted was as follows: when the mixtures of earth and manure had been undergoing nitrification for the required time, they were placed in a 2-litre flask, 500 cc. of water added and the flask rotated on the SCHLOESING car. After a quarter of an hour the earth and water were completely mixed, and the nitrates were dissolved in the surface liquid; the liquid was drawn off into a large glass, the soil was allowed to settle and the surplus liquid filtered. 250 cc. of water were poured into the earth, which was shaken up and filtered after settling. This washing by decanting was once more repeated, after which the liquid and the mud were conveyed into the filter, and the latter washed after completion of draining off. In this way there were obtained the nitrates contained in the soil in a clear but very but dilute solution, which it is necessary to concentrate in order to determine the quantity by the SCHLOESING method.

The nitrate must have been lost in the course of this concentration and determination.

For the purpose of checking this loss, if any, the writer, with a soil different from that previously used, made two mixtures with one kilogram of earth with chrome leather under the conditions described. These two mixtures were kept for forty days in two vessels; at the same time, and under the same external conditions, a kilogram of earth was studied by way of control. After 40 days, when the three lots were exhausted on the method used in the preceding experiments, the two liquids resulting from the exhaustion of the mixture of earth and chrome leather were combined, mixed and divided into two equal volumes. In one, after concentration, the percentage was measured direct; to the other there was added a quantity of nitrate containing 0.150 gr. of nitric acid, it was then condensed and the contents measured. The results arrived at were as follows:

*Nitric Acid per Kilogram of Earth.*

| | |
|---|---|
| Existing in the soil at the start of the experiment . . . . . | 0.093 gr. |
| Contained in the soil forty days later . . . . . | 0.110 |
| Contained in the mixture of soil and chrome leather . . . . | 0.003 |
| Found after the addition of 0.150 of nitric acid to the exhausting liquid . . . . . | 0.155 |

The method of measuring the contents of nitric acid therefore plays no part in the results found.

*Agricultural Control.* — 3 pots of equal size were used, each capable of containing about 15 kg. of earth; into one, earth was put without manure, into the second, earth mixed with chrome leather, and into the third earth mixed with dissolved leather. In each pot 25 grains of wheat were sown on the 16th April. These germinated normally on the 21st April. In the early days of May the young wheat stalks differed clearly; the plants growing in the pot containing earth mixed with chrome leather were of very poor vitality, the leaves being yellowish in colour, while the plants in the other pots were strong, and the leaves were a fine dark green, particularly in the pot containing earth mixed with dissolved leather. The plants were weighed on the 1st July. Taking the weight of the crop in the vessel to which no leather was added as 100, the weight of the three crops will be represented by the following figures:

| | |
|---|---|
| Earth without manure . . . . . | 100 |
| Earth with chrome leather . . . . . | 30 |
| Earth with dissolved leather. . . . . | 115 |

*Interpretation of the Results and Conclusions.* — Chrome leather is injurious to vegetation, and should therefore not be be regarded as a manure. The chromium sesquioxide contained in this leather becomes hyperoxidised in the soil, destroying the nitrates, and after five months' contact the decomposition of the leather is so small that the earth with which it has been incorporated contains less nitrate than earth to which no manure has been added.

Farmers should not use tanned leather, which is of no fertilising value, nor roasted leather, the farm value of which is much below the commercial value. These manures, even under the conditions of the experiment, which were exceedingly favourable to nitrification, only gave the following quanties of nitric acid per gr. of nitrogen contained:

| | In one month | Two months | Five months |
|---|---|---|---|
| Ground tanned leather . . . . . | 0.021 gr. | 0.030 gr. | 0.078 gr. |
| Ground roasted leather . . . . . | 0.075 | 0.105 | 0.197 |

On the other hand, leathers dissolved in sulphuric acid showed a considerable nitrification, and they may be used to advantage by farmers; but even here, in order to obtain the maximum effect with these products, the treatment with sulphuric acid must be very active, and must not leave behind any non-disintegrated fragments of leather.

962 – **Catalytic Manures: Manganese as a Catalyser of the Biochemical Reactions by means of which Plants Assimilate Atmospheric Nitrogen through Bacterial Agency.** — DE GREGORIO ROCASOLANO ANTONIO, in *Revista de la Real Academia de Ciencias exactas, físicas y naturales de Madrid*, Vol. XIV, No. 10, pp. 681-693, 3 diagrams. Madrid, April 1916.

Experiments carried out starting from the hypothesis that any cause capable of exciting the biochemical activity of the nitrogen-fixing organisms contained in the soil will have the effect of increasing the quantity of atmospheric nitrogen fixed in the soil or in the plant, and consequently of increasing the crop. There were used for these experiments pure cultures of *Bacillus radicicola* isolated from the root nodules of red clover cultures of *Clostridium Pasteurianum* and *Azotobacter chroococcum* isolated from a cultivated soil.

Quantities of 100 cc. of culture bouillon (to which mannite had been added and which contained a known percentage of nitrogen) were placed in ERLENMEYER flasks, and inoculated with pure cultures of *B. radicicola*. One flask was used as control. To the 7 others increasing amounts of a graded solution of manganese chloride were added. The flasks were incubated for 25 days at a temperature of 22-23° C. and afterwards sterilised. Finally the total quantity of nitrogen in the contents was determined by the KJELDAHL method. The experiment was repeated in several series. The results show that *B. radicicola* fixes atmospheric nitrogen even in the absence of manganese, but the manganese modifies the rapidity of reaction, that is to say it is a catalyser of the biochemical reaction; it accelerates the latter in increasing proportions up to the optimum quantity which is 0.006 gr. of manganese ion per 100 cc. of bouillon. With this amount the quantity of nitrogen fixed was about three times that of the control. With doses of manganese in excess of the optimum, the acceleration falls off suddenly, then (at 0.020 gr. %) the action changes into one of retardation. The experiments with *Clostridium Pasteurianum* were conducted in the same way as those described above. The manganese is of great importance to this micro-organism, as it was found that in the absence of this element it

does not fix atmospheric nitrogen. In its presence it fixes nitrogen in appreciable quantities. The optimum degree of concentration of the catalyser is the same as for *B. radicicola* (0.0041 gr. of nitrogen per 100 cc. of culture bouillon were fixed with this amount); in concentrations higher than the optimum, the acceleration is diminished and finally becomes negative.

The experiments with *Azotobacter chroococcum* yielded results similar to the preceding ones. This bacterium likewise only fixes atmospheric nitrogen in the presence of manganese; the optimum concentration of the manganese ion is about the same.

The practical conclusion is that fertilisers containing manganese increase the crop, if applied in quantities furnishing up to 0.006 gr. of manganese ion per 100 gr. of soil. They reduce it if administered in quantities in excess of this. The majority of soil contain quantities of manganese in excess of the above optimum, but the bulk of this manganese is in insoluble form. In order to calculate the quantity of manganese salt to be put down as manure, therefore, it is first necessary to ascertain the quantity of soluble manganese contained in the soil and add only the difference.

963 – **Successful Treatment with Insecticides of Plants in Flower.** — SHREIBER A. F., in *Труды Бюро по прикладной Ботанике* (*Bulletin of Applied Botany*), IXth Year, No. 4 (89), pp. 174-175. Petrograd, April 1916.

AGRICULTURAL BOTANY, CHEMISTRY AND PHYSIOLOGY OF PLANTS.

After referring to the experiments by Prof. S. GLASENAP, on the successful treatment with tobacco juice of apple trees in flower (1), the writer gives the results of his own experiments at Irkutsk (Siberia) on an experimental field for the cultivation of medicinal plants.

The experiments were carried out on *Calendula officinalis* L. which is very liable to the attack of the larvae of *Mamestra brassicae*, these latter devouring the leaves. One part of the plants in the field was sprayed with dilute extract of aloes and the other part with a solution of extract of *Veratrum album*. Two successive sprayings were made which killed off all the larvae. This treatment did not reduce the crop of seeds, and the plants watered in this way when in flower all yielded ripe seeds.

964 – **Osmotic Pressure of Soil Moisture and Glassiness of the Grain of "Bielotourka" Wheat.** (From the Works of the Laboratory and Growing Shed of the Scientific Agricultural Station of Bezentchouk, Province of Samara, Russia). — TOULAIKOV N., in *Журнал Опытной Агрономіи* (*Review of Experimental Agriculture*), Vol. XVII, Book I, pp. 79-91. Petrograd, 1916.

Great fluctuations in the price of hard wheat, which took place on one and the same day at the Exchange of Samara, attracted the attention of the Station, which, from 1913 onwards, organised a series of experiments on the glassiness of the grain of the "Bielotourka" hard wheat, thus continuing work on the relations between the osmotic pressure of the soil moisture and the growth of the wheat in question (2).

(1) See *Bulletin de Botanique appliquée*, Vol. VI, No. 4, pp. 243-247; Petrograd, 1915. (*Ed.*)

(2) See *B.* 1914, No. 980. (*Ed.*)

In 1913 it was noticed for the first time in the laboratory that in " Bielotourka " wheat cropped from the same pot some grains were found with glassy fracture and others with floury fracture, and that the number of floury grains was greater in the pots with greatest soil humidity.

In 1914 and 1915 experiments were carried out in order to study the distribution of the floury grains in the ear, as it was at first assumed that the presence of these grains in the wheat ear of " Bielotourka " was a defect which must have occurred in the grains of the upper part of the ear, the said grains being incompletely ripe or developing under abnormal conditions. The result of the experiments carried out with great care was however negative, that is to say, it was not possible to detect any relation between the location of the grain on the ear and the character of its fracture.

In 1915 experiments with pure lines of " Bielotourka " were made, the humidity of the soil in the pots being maintained at 50, 60, 70, 80 and 90 % of complete saturation, or approximately at 20, 24, 28, 32 and 36 % of its weight when completely dry. The experiments demonstrated that while with 20 % of moisture in the soil all grains have a glassy fracture, with an increase above this percentage the grains with more or less clear floury fracture appear, and in the pot with 35 % of moisture in the soil the grains with glassy fracture form only 10.8 % of the total crop. Thus the glassiness or floury fracture of the grain of "Bielotourka " wheat, even within the limits of a pure line, does not represent a constant character, but the fracture may be modified under the influence of external factors intervening in the course of growth, and, in the particular case under study, under the influence of the degree of moisture of the soil.

In order to investigate the influence of osmotic pressure on the character of the " Bielotourka " grain, experiments were made in the greenhouses; effect of changes in the osmotic pressure were studied by adding to the soil the necessary quantity of the following salts: chloride, sulphate and nitrate of sodium, ammonium sulphate, ammonium nitrate. The appended table brings out clearly the relation between the osmotic pressure (determined in this particular case by the addition of sulphate of soda), and the nature of the grain of " Bielotourka ".

Evidently therefore the quantity of grains with glassy fracture increases with the rise of the osmotic pressure in the soil moisture, and at the pressure of 7 atmospheres all grains had become glassy.

It follows from a comparison of the data relating to the other salts experimented on, that their action is not equal ; nevertheless, by gradually increasing the osmotic pressure of the soil solution a greater quantity of glassy grains is obtained, and at a given pressure for each salt, all the grains become glassy. Thus by modifying the pressure of the salt salution it is possible to obtain glassy or floury grains at will with " Bielotourka " wheat. The following fact was also clearly brought out: sodium salts exert a different action of the formation of the glassy grain, according to their acid radicles. Sulphate of sodium exerts the feeblest action ; chlorine acts more and nitrate of soda still more strongly ; with the addition of this last salt in a sufficient quantity to raise the osmotic pressure to 2 atmospheres, almost

*Osmotic Pressure of the Soil Solution and Character of the Grain of "Bielotourka" Wheat.*

| Osmotic pressure in atmospheres | Percentage of total crop exhibiting a: | | |
|---|---|---|---|
| | floury fracture | glassy-floury fracture | glassy fracture |
| 0.5 | 27.8 | 70.0 | 2.2 |
| 1.0 | 8.3 | 88.5 | 3.2 |
| 1.5 | 3.6 | 83.0 | 13.4 |
| 2.0 | 3.3 | 76.8 | 19.9 |
| 3.0 | 2.2 | 65.6 | 32.2 |
| 5.0 | 1.7 | 48.0 | 50.3 |
| 7.0 | nil | nil | 100.0 |

the whole of the grain becomes glassy, while with sodium chloride and sodium sulphate at the same osmotic pressure only 20 % of glassy grains are produced.

The presence of nitrogen in the basic or acid radicle of a salt reacts on the quantity of glassy grains in the crop: for all ammoniacal salts, as likewise for sodium nitrate, even at low osmotic pressures (1.5-2.0) the whole of the grain is glassy. Thus, between glassiness of the grain and the presence in the soil of a quantity of nitrogen in excess of that found there, normally a very clear connection exists, *viz*: the increase of nitrogen in the nutrient medium entails an increase in the quantity of grain with glassy fracture.

With a view to better studying the glassiness of the grain, the Station in 1913 made an analysis of this grain as to its total nitrogen content; the "Bielotourka" grain was taken from a single pot in which the humidity of the soil had been maintained at 24 % of its total weight in the absolutely dry state; this grain was divided into three groups according to the character of the fracture.

The following results were obtained: the glassy grain represented about 20 % of the total quantity, and contained 2.02 % of nitrogen; the glassy-floury grain formed 38.3 % and contained 1.80 % of nitrogen, and finally the floury grain formed 41.7 % and contained 1,62 % of nitrogen; it follows that the glassy grain contains a larger quantity of nitrogen than the floury grain. Similar investigations were made into the soft wheat grain "Poltavka", produced under conditions identical with those of "Bielotourka" the glassy grain of the soft wheat contained 2.08 % of nitrogen and the floury 1.83 %.

The quantity of nitrogen in the glassy grain increases with the increase of the osmotic pressure of the soil moisture determined both by nutrient and non-nutrient salts, and with the increase in the percentage of glassy

grains. Equal percentages of nitrogen content correspond to equal percentages of glassy grains. Thus, according to the experiments in 1915, with sodium sulphate, sodium nitrate and ammonium nitrate, for the first two salts, at 32-38 % of glassiness of the grains, the content of nitrogen is nearly the same, fluctuating about the figure of 2 % (2.40-1.969 %). When the glassiness reached 100 %, an almost uniform percentage of nitrogen is obtained with all the salts, near 2.8 % (2.711-2.907 %).

The fact emphasised by the Author in his diagrams should be noted, that in the grain, even when the whole of it has become vitreous, the content of nitrogen continues to grow with the increase of the osmotic pressure according to the rule formulated herewith.

It is therefore concluded that the glassiness of the grain is not the factor on which the total content of nitrogen of the wheat grain depends, but that this latter property, as likewise the glassiness, depends, under certain external conditions of growth, on a more general cause, namely the osmotic pressure of the soil moisture and the quantity of soluble nitrogen contained in the soil. For instance, it may be assumed that the increase in the osmotic pressure causing a rise in the nitrogen contained in the grain of "Bielotourka" wheat, also produces an increased degree of glassiness of the grain. The influence of the degree of moisture of the soil may be explained by the fact that a greater humidity of the soil means a weaker concentration of the solutions and a lower osmotic pressure of the soil solution.

965 – **Senile Changes in the Leaves of *Vitis vulpina* L., and certain other Plants.** — BENEDICT HARRIS M., in *Cornell University, Agricultural Experiment Station of the College of Agriculture*, Memorandum No. 7, pp. 275-370, tables 59 + 52-58 fig. Ithaca, New York, June 1915.

An examination of the observations of modifications resulting from senility in perennial plants indicates that in this direction no investigations have been carried out on the lines of those undertaken in the animal kingdom. Observations on the effects of age in plants represent occasional records rather than investigations. The reason of this appears to be the tacitly accepted belief that since new leaves, stalks and roots are constantly formed from persistent embryonic cells, senility, as it occurs in animals, must not be considered in relation to plants, and that this term, when used of plants, merely means that the conditions have become so unfavourable that parts in process of growth are killed. This view was encouraged by the very advanced age attained by some trees. The importance, however, of determining whether or not senile modifications occur in plants, lies not only in the scientific interest of this determination but also in its reaction on the vexed question relating to the effects of the continuous vegetative propagation of seed-producing plants.

For his investigations the writer adopted *Vitis vulpina* L., a plant remarkable for the extreme vigour with which it puts forth a new growth every year, in order to reduce to the lowest possible minimum the likelihood of unfavourable conditions other than old age. He therefore carefully sought out, in the vicinity of Ithaca, New York, and Cincinnati, Ohio, vines of different ages growing near to each other under the most similar possible ex-

ternal conditions. He was able to find 20 pairs of vines answering to these conditions, each pair consisting of a young and old vine. From each vine he took 10 healthy, normal leaves which had reached full development, and he examined the venation of these leaves. In this examination he took into account the following principles previously established either by other observers or himself: the islets, bounded by ribs, are of a constant size in the different parts of the leaf; they are of the same size in leaves of different size or thickness taken from one and the same plant; furthermore, in leaves of one and the same vine having a different solar exposure, the exposure has no influence on the surface of the islets.

In vines of different ages, however, the surface of the islets varies greatly, being much larger in the youngest vines: the variation ranges from 0.5154 sq. mm. in a 3 year old vine to 0.1376 sq. mm. in a 70 year old vine. This difference cannot be attributed to anything but old age, the effect of which is to give rise to a denser growth of the vein system, with a reduction of the islets bounded by the ribs. From this a method is deduced for determining the age of *Vitis vulpina* by mere examination of the venation and the following table is given for that purpose:

| No of veinlets intersecting a 2 cm. line | Corresponding Age of the Vine |
|---|---|
| 30 to 35 | 5 years or less |
| 35 to 45 | 5 to 15 years |
| 45 to 50 | 15 to 35 years |
| 50 to 75 | 35 years and more |

He verified the conclusions to which he had been led from examination of the leaves of *V. vulpina* by checking with other plants: *Vitis bicolor*, Le Conte, *Tecoma radicans* L., *Salix nigra* March, *Castanea dentata* Bork, *Quercus alba* L., *Tilia americana* L., *Ulmus americana* L., *Carya alba* Koch, *Carya ovata* Koch, *Acer saccharinum* L., *Acer saccharum* Marsh, *Quercus velutina* Lam., *Platanus occidentalis* L., and *Fraxinus americana* L. These plants all allowed of the same observations as to the influence of age with regard to the venation.

If age affects the meristematic tissues of seed-producing plants, the cells of the scions used for propagating certain varieties must be equally affected. The writer having considered this hypothesis verified it by his observations: plants produced by grafting are, as regards the leaves, of the age of the plant which furnished the scion, this age being reckoned from the time of production of the parent plant from seed; grafting and growth on the host do not renovate the youth of the tissues of the scion.

These conclusions are next discussed, and the causes to which the senility of leaves is to be attributed are sought for. The insufficiency of conveyance of nutrient liquids by the vessels of plants which have grown old is dismissed. The possibility of the production of toxins is an attractive hypothesis, but there is no direct and evident proof of their existence, and this hypothesis must be abandoned, because senility persists in cuttings separated from the old plant. It is therefore suggested that the visible

variation in the network of veins on the leaves is a progressive modification in the cells of the meristem and the leaf inherent in the nature of their protoplasm, this progressive variation being called senility in regard to animal protoplasm ; the increase of the vascular tissue of the leaf with age furthermore constitutes a degeneration as regards physiological activity.

In order to establish this latter point the writer compared the photosynthetic activity of leaves belonging to old or young trees respectively. He made use of a method of approximation consisting in determining the gain of weight in one day of fragments of leaf equally exposed to sunlight. The determinations, carried out in August, gave the following general results as regards *Vitis vulpina :*

| | |
|---|---|
| Average gain for leaves of 5 to 8 year old vines . . . . . | 9.4 % by weight |
| Average gain for leaves of 20 to 25 year old vines . . . . . | 1.4 % " " |

He likewise determined the rate of elimination of carbonic acid in leaves taken from *Vitis vulpina* at different ages, and obtained the total results exhibited by the following table :

| | |
|---|---|
| Average age of the young vines utilised . . . . . | 7.3 years |
| Average age of the old vines utilised . . . . . | 25.4 years |
| Number of determinations made . . . . . | 92 |
| Average duration of each determination . . . . . | 23.86 hours |
| Rate of elimination of carbonic acid for the young vines . | 0.0349 % per hour |
| Rate of elimination of carbonic acid for the old vines . | 0.0297 % per hour |

He next started to determine the quantity of water absorbed by young and old vine leaves, reduced to fine powder, in order to have indications as to the capacity of living leaves to retain water. He observed first of all that acidity is higher in the powder of young leaves than in that of old leaves (in the former case an average of 2.2 cc. of a decinormal solution of potash is required to neutralise 0.2 g. of powder, against 1.5 cc. for old leaves) ; in order to get rid of the influence of this acidity, he neutralised the substances subjected to experiment and obtained the following results :

| | |
|---|---|
| General average of water absorbed by the leaves of young vines . . . . | 189.0 % |
| General average of water absorbed by the leaves of old vines . . . . . | 387.9 % |

Finally, he looked for and found other signs of senility. Thus he observed the variations in the number of stomata in *Vitis vulpina* of different ages.

*Number of stomata in 1 sq. mm., average for vines of :*

| | |
|---|---|
| 5 to 7 years . . . . . | 117 |
| 8 to 10 years . . . . . | 129 |
| 20 to 30 years . . . . . | 282 |

He next proposed to determine the size of these stomata, and reached the following results :

*Average longitudinal diameter of the stomata.*

| | |
|---|---|
| Vines from 5 to 7 years . . . . . | 16.6 μ |
| Vine from 20 to 30 years . . . . . | 10.8 μ |

Similar results were also obtained by the measurement of the cells of the palisade layer in the leaves (12.2 μ in the 5 year old vines as against 10.3 μ in those of 20 year old vines) and by determining the ratio between the cytoplasm and the nucleus (this ratio being 388 to 1 in the vines aged from 5 to 7 years, as against 478 to 1 in those of 20 to 30 years) ; nevertheless this latter determination does not present all the necessary conditions of accuracy.

The writer next draws conclusions from these observations, and in particular envisages their application to the question of the degeneration of plants reproduced by scions or slips ; he lays stress on the interest attaching to investigations on this important question. Finally he examines and generalises the theories of senility, in order to extend them both to the animal and vegetable kingdom. He rejects the theories relating to the localisation of senile modifications, including the theory of METCHNIKOFF on the part played by toxins secreted in the main intestine of animals and in the flower of plants. He likewise does not admit that old age is due to the accumulation of katabolic products, or to the decreasing elimination from the body of the products of secretion of cells placed far away from the surface. To him, old age results from a physical or chemical degeneration involving the protoplasm itself, producing among other changes a diminution of permeability, and he concludes that the evidence appears very strong, both from the point of view of senility and that of regeneration, that the duration of life is directly bound up with the degree of permeability found in that part of the living cell which is in contact with the surrounding universe, and that in proportion as the activities of life continue, the cell is entombed by an inexorable diminution in the permeability of its protoplasm. The fundamental cause of this diminution may very well be the colloidal nature of protoplasm. The relatively simple relations existing in non-living complex colloidal bodies tend to be modified under the action of external forces, or even by the mere action of time ; it seems inevitable that the extremely complex colloidal states which form protoplasm should be modified progressively by the activities of life and by the intervention of external forces. What should give rise to astonishment is not the senile modifications of the protoplasm, but their tardiness in appearing.

Regeneration is the process by which the original arrangement of the colloidal elements constituting the protoplasmic colloids is restored.

Sexual reproduction is one of the methods by which this regeneration is accomplished, while it is ensured by more primitive methods in asexual plants.

It is for the future to solve the question whether the progress of senility in sexed plants and animals can be arrested or even retarded by means of regeneration such as are utilised in asexual forms, and which are thus to a certain extent applicable to the whole of the somatic cells. The know-

ledge which we at present possess as to the cause of senile degeneration does not allow of a rash negation of the possibility of somatic regeneration.

In a bibliographical appendix the writer gives a list of 57 works.

PLANT BREEDING

966 – **Experiments in Siberia, on Different Varieties of Oats.** — (Communicated by the Establishment for Seed Production of Smoline L. D. and Skalosoubov N. L., situated near Kurgan, Government of Tobolsk, Siberia). — SKALOSOUBOV N. L., in *Сельское Хозяйство и Лѣсоводство* (*Agriculture and Sylviculture*), Year LXXVI, Vol. CCL, pp. 562-571. Petrograd, April 1916.

The experiments begun in 1913, chiefly with the object of elaborating and establishing the methods and technique of selection, were resumed in 1914, the original selected seeds being made use of wherever possible. The following varieties were experimented on: 1) " Rykhlik " oats of the Experimental Station of Sobiechine, coming from Siedlez, Poland (No. 809); 2) " Golden rain " from Svalof (No. 766); 3) Imchinsk oats, received from Tobolsk (No. 743); this variety was held in good repute 15 years ago; 4) beardless Probstei oats from Svalöf (No. 747); 5) " Victory " from Svalöf (No. 768); 6) " Ligovo II " from Svalöf (No. 768); 7) " Rykhlik " from Sobiechine, first growth of this variety on the farm (No. 553).

On the basis of the description of the varieties of oats given by KORNICKE, the writer states that among the 6 varieties experimented on, 4 were found to be homogeneous from the botanical point of view: the " Golden rain " may be referred to *Avena sativa patula* var. *aurea*, Keke; the Probstei beardless to the same variety; " Ligovo II " to the variety *A. sativa patula aristata* Keke; " Victory " to the variety *A. sativa patula* var. *praegravis* Kr.; the " Rykhlik " from Sobiechine appears to be a mixture of the three forms of *Avena sativa: patula* var. *trisperma* Schübler, *aristata* Kr., *praegravis* Kr., or of four forms, namely the 3 preceding ones and in addition the variety *aurea* Keke; finally the Imchinsk oats are made up of three forms: *A. sativa patula: mutica* Al., *praegravis* Kr. and *aristata* Kr.

The experiments were made on plots of 109.25 sq. metres (0.01 dessiatine), each being repeated on 3 plots, taking as the standard of comparison the original " Rykhlik " variety from Sobiechine (No. 909). The oats followed potatoes on a sandy tchernoziom soil ploughed in autumn and spring before sowing.

In estimating the results the writer did not confine himself to the arithmetical mean of the crops, but also made allowance for the probable error; he also carried out researches into the more or less close stand of the culms, on tillering, earliness, on the variations in the weight of the glumes, and on the absolute weight of the grain. He thus found that from the point of view of yield the varieties " Rykhlik " from Sobiechine and the 3 Svalöf varieties, namely " Victory ", " Probstei " and " Golden rain ", stand out; from the point of view of earliness: the " Rykhlik " from Sobiechine and " Golden rain "; as regards weight of glumes " Probstei ", " Golden rain " and " Rykhlik " from Sobiechine are the most prominent, and as regards the absolute weight of the grain: " Rykhlik " from Sobiechine, " Victory " and " Probstei ", while " Golden rain " ranks last in respect of this

character, which renders it highly valuable for sowing because in order to sow a given surface a smaller quantity of small than of large grains will be needed.

The direction of variability of the varieties tested under the local conditions of Siberia is clearly brought into evidence by the table annexed, in which a comparison is made between the two characters : grain production and size of the seeds (the data for the Svalöf varieties are taken from the publications of the Svalöf Company).

This table shows that under the conditions ruling in 1914, which was a favourable year, all the Svalöf varieties with the exception of " Ligovo II " gave a better unit production in Siberia than in their country of origin, i. e. Southern Sweden. As regards the absolute weight of the grains, it diminished in the varieties " Golden rain " and " Probstei ", while it increased in " Victory " and " Ligovo II " ; but if account is taken of the fact that the Svalöf seeds were put on the market after very careful sorting out for size, while for the seeds grown in Siberia the sorting was reduced to getting rid of the stunted and light seeds by the Clayton and Reber apparatus, this difference becomes quite unimportant. The comparison between the numbers of grains contained in 21.33 gr. of the original product and in that obtained in Siberia renders the reduction in size of the Siberian-grown grains more strongly evident ; this is explained by the fact that the Siberian grown grains were not sorted out with regard to weight and that the Svalöf seeds employed for sowing were, in respect of absolute weight, slightly above the averages published by the Svalof Station.

*Variability of the Varieties of Oats when grown in Siberia*

| Varieties of Oats | Original productivity | | | Productivity in Siberia | | |
|---|---|---|---|---|---|---|
| | Productivity per acre in cwt. | Absolute weight of 1 000 grains of oats gr. | Number of grains of oats in 21.33 gr. | Productivity per acre in cwt. | Absolute weight of 1 000 grains of oats gr. | Number of grains of oats in 21.33 gr. |
| « Rykhlik » from Sobiechine | — | — | 550 | — | — | 616 |
| « Golden rain » . . . . . | 26.87 | 28.6 | 623 | 27.23 | 27.5 | 753 |
| Imchinsä oats . . . . . | — | — | 768 | — | — | 784 |
| « Probstei » . . . . . | 26.64 | 32.4 | 533 | 28.07 | 32.3 | 641 |
| « Victory » . . . . . | 27.95 | 32.0 | 513 | 29.86 | 32.8 | 626 |
| « Ligovo » . . . . . | 26.4 | 35.1 | 503 | 24.47 | 37.5 | 554 |
| "Rykhlik", grown on the farm itself . . . . . | 19.35 | 34.9 | 630 | 25.31 | 32.9 | 620 |

967 – **Work in Tobacco Selection at the Experimental Station of Djember, Residence of Besoeki, Java, from 1912 to 1915.** — SPRECHER ANDREAS, in *Mededeelingen van het Besoekisch Proefstation*, Nos. 6-9-12-18. 1914 and 1915.

I. — PLANT IMPROVEMENT WORK. — This was undertaken in 3 directions, namely :

(*A*) Choosing among the races hitherto grown in the country types which answer the purpose in view to the best possible degree ;

(*B*) Introducing new races capable of competing advantageously with the old races of the country ;

(*C*) Production of constant hybrids combining the favourable characters of yield of different old types.

The tobacco plantations in the East of Java differing greatly as regards altitude, exposure, temperature, rainfall, humidity of the air, wind, soil, etc., it is obvious that the same race cannot everywhere answer the requirements of planters. For this reason, at least 3 races have been under cultivation for a long time in the province of Besoeki, apart from the first crosses which well informed planters send in large quantities every year to the European market where they meet with promising success, and the races cultivated by the natives for their own account. The latter sometimes supply a cheap tobacco very much in demand for the Rotterdam and Amsterdam markets, and above all they furnish the requirements of the country.

In view of the different races under cultivation, the manifold objects to be attained and the unequal conditions of plantations, it was clearly essential to have experimental fields in different places. The tobacco planters in the East of Java quite clearly realise this ; the new experimental Station at Djember therefore now possesses 4 experimental fields occupying an aggregate of about 30 acres, owing to which arrangement an examination may be made, at different altitudes, under different atmospheric conditions, and on varying types of soil (although all of volcanic origin), either of the lines selected from the races of the country, or of the first or subsequent crosses obtained on a rational method, or again foreign varieties and races.

Though it is not practicable to obtain 2 good tobacco crops from the same field in one year, it is nevertheless possible, when there is a sufficiency of land available, to carry out 2 plantings, one during the rainy season (January-April), the other during the dry season (August-November). In this way, the Djember Station every year carried out 2 plantings, even 3, the dryest months (June-August) being chosen for Turkish tobacco.

Owing to its not being found advantageous to plant tobacco every year on the same soil, some planters rotate their cultivations as follows : after a rice crop in May tobacco is put down (August-November), then again rice (January to May), then maize, soya or some other leguminous crop is planted, then once more rice, and it is then the turn of tobacco again after 2 years. It is a great advantage to be able to alternate cultivations, and the "sawahs" (paddy fields) are admirably adapted for growing tobacco in these tropical regions. The rivers which serve to irrigate the fields not only contribute a fair amount of fertilising silt, but besides this the water which remains on the fields for some time kills the many insects to be found in the soil, which insects might sometimes have disastrous effects in hot countries.

(A) *Choice of suitable Types.* — The selection of local races was begun with 120 parent plants, 55 being of the "Kedoe" race and the others

of the " Deli " and " Canarie " races. According to COMES, the 3 races are the result of crosses between the varieties *havaniensis* and *macrophylla* (*purpurea*) (1). The " Deli " race is finer and in a favourable climate yields cigar wrappers which are much in demand. The " Kedoe " race is not so fine, but is more aromatic and more vigorous, and does not require so much attention as the " Deli " race. It also sometimes furnishes wrappers for cigars of a less fine quality. The " Kedoe " plant presents some points of resemblance with one of the " Manilla " races, and that is alleged to be its origin. The " Canarie " race will stand more drought and heavy soils. In the East of Java it does not yield as good a tobacco as the " Deli " and " Kedoe " races, while in the Sultanates of Djokjakarta and Soerakarta, in the middle of Java, it is the only one cultivated and supplies a tobacco of dull appearance for cigar wrappers.

All the parent plants chosen in the autumn of 1912 in the different plantations were analysed on the methods set out in Bulletin No. 9. The results of this large task, however, are only public in respect to the " Kedoe " race which was the first to be studied. The analysis embraced the height of the plant, the number, shape, uniformity, venation and mutual position of the leaves. The following points of the first 15 leaves, green and dry, were studied for each plant: length, width, area, ratio between length and width and fineness, *i. e.* ratio between area and weight of leaves. Finally, for the dried leaves, the weight of the midrib was indicated, the ratio between the weight of the leaf and the rib, then the colour, determined by means of a scale of colours, and finally the burning qualities and the colour of the ash. In this way average values were obtained and also coefficients as to correlation which may serve as a standard of comparison for all subsequent studies in relation to the " Kedoe " race.

There was found: an inverse correlation between the number of the distance apart of the leaves; a direct correlation between the number of the leaves and the ratio of their length and width; a third, direct, between the weight of the leaf and the weight of the midrib; a fourth, inverse, between the weight of the leaf and the ratio between length and width; a fifth, direct, between length and width of the leaves and so on.

The methods hitherto adopted in laboratories in studying the combustion of tobacco have no practical bearing, in the writer's opinion, but may on the other hand serve for comparison of the different races and lines. The fineness of the tobacco, as well as its rapid and continuous combustion, depend mainly (questions of race apart) on the ripeness of the leaves, and in the second place on the drying and fermentation of the tobacco. Leaves which are too old and those which are too young exhibit the same faults: want of fineness and defective combustion. The reasons for these defects, however, are not the same in the two categories. In over-ripe leaves there is an excess of cellulose and woody substances; on the other hand, the over-

(1) The writer adopts in its entirety the system of tobacco classification of Italian writers. Thus the species *Nicotiana Tabacum* is subdivided into varieties, the varieties into races, the races into genotypes or pure lines and the lines into individuals.

young leaves contain too great a quantity of fats and albuminoids, which do not decompose to a sufficient degree during the fermentation of the tobacco.

In leaves picked at the right time, the mineral salts and organic substances are present in favourable proportions. In this condition of the leaf, the ferments in it are active, and it is these ferments which, during suitable fermentation of the tobacco, are capable of effecting transformation of the starch, sugars, cellulose, fats and albuminoids.

Unfortunately, the study of the lines chosen among the native races could not be continued each year in as thorough a way as was reported in Bulletin No. 9. Thus, in Bulletins Nos. 12 and 18 the different types are judged from the practical point of view only. For some lines of the races "Deli" and "Kedoe", however, cultivated on two different fields, statistical study was carried a little farther as regards the height of the plants, the number and distance apart of the leaves, and also the number of leaves up to 1 metre height of the stalk. The results of this analysis are, *inter alia*, the following.

1) The field with more moisture and less sun, a less clayey and lighter soil, produced a greater length of stalk together with greater distance apart and size of the leaves, while the other field with less moisture, more sunshine, and a heavy and clayey soil, yielded more closely packed plants with more numerous and smaller leaves. The two races behave identically.

2) In both races, the lines with the greatest number of leaves up to 1 m. height are preferable from the quantitative and qualitative point of view. The types with leaves a short distance apart generally possess a larger number of leaves than others in which the spaces are wider, and where there are small spaces the leaves follow each other more regularly on the stalk, and afford better shade, so that when dry they exhibit a more homogeneous lighter and duller colour.

3) The seedlings chosen in the first place from the nurseries yield a finer plantation than the second or third choice of seedlings. All other things equal, backward seedlings will never yield in the open field tobacco plants as healthy and with as many leaves as strong seedlings. Seeds with feeble germs do not, even if the nurseries are manured, produce as strong adult plants as non-manured seedlings derived from strong embryos.

What is called the "Deli" race is a mixture of many genotypes. Several of these types have been under cultivation for years in the east of Java; for instance the "Deli-Palembang", "Deli Toentoengan", "Deli Besoeki", "Deli-Arensburg", etc. Even the "Deli-Medan", however, is composed of several types, and the writer regards the "Deli" race as more variable than the "Kedoe" race. Though the difference may not always be easy to detect in the field, it is obvious on comparing the dry tobacco, and if the trouble is taken to mesure the plants it can be demonstrated mathematically. It is by measuring, counting and weighing certain properties of the phenotypes which for several generations represent the different genotypes, that a pure line may most effectively be distinguished from a population of types.

(E) *Introduction of New Races.* — About a hundred foreign races were planted during the three years in the different fields of the Stations. The seeds were obtained both from the experimental tobacco Institute of Scafati (Italy), and from the Department of Agriculture in Tokio (Japan). Among these exotic races, there were forty from Japan, others from the Balkans and Asia Minor, others again from the W. Indies, North and South America, etc. The results obtained are not encouraging, but it must not be forgotten that a single trial cannot be deemed sufficient.

Some by the Japanese races are distinguished by a fine leaf and a light colour, for instance " Hatano " (which has already been used for some years by growers in Besoeki for the production of hybrids), " Shinde " and " Satsuma ".

Turkish tobaccos (tobaccos from the Balkan countries and Asia Minor) grow fairly well, but the moisture of the air, even during the dryest months, is too much, which results in the leaves growing too large, too fine, and without sufficient aroma to form a good cigarette tobacco. It has not been possible up to the present, in spite of every care in gathering, drying and fermenting, to preserve the golden yellow colour of the leaves which characterises some Turkish tobaccos ; the most serious defect, however, is their weak aroma. Among the races which stand out favourably from the point of view of colour, aroma and combustion, mention may be made of : " Yaka-Kanthi ", " Yaka-Cavalla ", " Aya Solouk " and " Samsoun ".

The North American races proved not to be sufficiently resistant to fungus diseases ; those of Central America, the W. Indies and South America gave coarse tobaccos of a variegated and dark colour.

The " Bajesi " race of Hungary and another from Timor are distinguished for their vigour ; they find no difficulty in growing in poor soils and under unfavourable conditions of climate.

By continuous and persevering work foreign races presenting greater advantages might be found, but the writer, working on behalf of the planters, was anxious to obtain a practical result as speedily as possible.

c) *Production of Hybrids with fixed Characters.* — Numerous crosses were made with a view to improving both the quantity and the quality of the tobacco. By selecting from among the races of the country only, if they form populations comprising many lines, there is the likelihood of finding an advantageous type for cultivation. Once the pure line is obtained, however, any subsequent improvement could only relate to the methods of plantation manuring, cropping, drying and fermentation, as a pure line cannot be changed ; whilst by hybridisation there are obtained in the 2nd generation a multitude of forms, some of which combine the favourable characters of the parents, while others exhibit morphological or physiological, or again ecological characters which were by no means apparent in the parents. Seeing that planters expend fairly considerable sums every year for breeding experiments, it was clearly the duty of the experimental Station to look for types sufficiently constant for cultivation on a large scale. Judging from the results obtained, this is possible within three years, that is, after 6 generations.

II. — Diseases and Pests. — It cannot be said that there are any really serious diseases of the tobacco plant in the East of Java :

There is some small amount of fungous disease (*Phytophthora Nicotianae, Bacillus Solanacearum* Erw. Sm., *Cercospora Nicotianae* Ell. and Evr., etc.), but it occurs quite sporadically. More dangerous are the numerous insects (*Heterodera, Gryllus, Gryllotalpa*, the larvae of *Plusia, Heliothis, Prodenia, Lita*, and *Opatrum*).

The larva of *Lita solanella*, particularly, produces galls in the young plants which prevent normal growth. A rather serious disease is the mysterious " mosaic disease " which chiefly attacks fine-leaved races. In spite of many studies, it is not yet known whether this is a fungus disease or results from defective assimilation. Such defective assimilation certainly occurs, but is it caused by bacteria or by the soil, moisture or heat ? This problem will no doubt be better solved by laboratory experiments in which the external conditions can be minutely regulated. In the open field there are many factors which escape investigation, in spite of the most estensive weather observations. The importance of the latter, however, cannot be over-estimated, above all in the study of tobacco, and it is a great advantage to the Station of Djember that it possesses a meteorological installation in the vicinity of one of the experimental fields.

III. — Mutations. — The Author next deals with some rather interesting forms of mutation (or deemed to be such) :

There is for instance a form with a double flower, very pretty, with the outer corolla turned up, which has repeatedly been observed in Java. It is extremely rare, but breeds true in all its characters ; one double plant among the seed plants of a plantation is sufficient for it to reappear in the following generation, unless it is to be supposed that the same mutation can be repeated successively in different places. In Bulletin No. 12 a good reproduction of this very pretty flower is found.

Another variation is represented by the giant plants found in the Dutch East Indies among the races " Deli " and " Canarie ", but apparently not among the " Kedoe " race. Instead of forming a large inflorescence in panicle form after 3 months' growth, the top of the plant continues to grow, forming numerous small leaves in the axil of which there is sometimes, but rarely, a single flower. More frequent among the giants are the forms which reach great heights (16 feet and more) ; they mostly remain completely sterile or in some cases, after 8 months' growth, produce a few rare flowers. The writer found that these latter forms transmit their characters on a constant way, while other forms which do not always exhibit all the characters of the giant plants produce among their descendants 1, 15, 20, 21, 25, 31, 36, to 91 % of giant plants, according to various workers. Here the Author does not admit the term mutation, as he is of opinion that this term should not be applied unless the hereditary factors of the initial material have been examined thoroughly, which was not done with tobacco. The " Deli " race, for instance, seems to him to be made up of several special races transmitting their characters in a more or less constant way according to external circumstances.

Giant plants are explained by means of the theory of TSCHERMAK on the association and dissociation of "cryptomerous factors". According to this theory, the races which from time to time produce giant plants are forms with dissociated cryptomerous inherited factors, that is to say that the factors which transmit the height of the plants, the standard of size, the number and distance apart of the leaves, the period of growth, etc., are combined in such a way with the factors which transmit the abnormal height, many leaves and a longer period of vegetation, that there is no action of the one class of factors on the other under ordinary conditions. The characters of the giant plant being dissociated from those of the normal plant therefore remain under these cryptomerous conditions, and a normal plant is formed. If, however, owing to external circumstances the two categories of factors come into contact, then in the progeny giant plants in greater or lesser number form according to the intimacy of this contact.

The property which produces the giant is therefore made up of several factors: slow growth, indefinite growth of the main axis (leader), poor inflorescence, long period of vegetation, leaves much more numerous, less wide, etc. Each of these factors is presumed to be present in the normal plant, but dissociated from the normal factors, for which reason they have no influence on each other. If a partial association occurs, a transitional form results. For instance, if the factor for late flowering remains dissociated, then the giant plant flowers like an ordinary plant; if the factor for slow growth remains dissociated, the plant develops as rapidly as a normal plant; if, finally, the factors of an indefinite growth and of a defective inflorescence remain dissociated, there is only obtained a plant with many leaves of less width and smaller internodes, which for the rest, however, present nothing abnormal. A perfect association therefore produces giant plants exclusively, and a complete dissociation furnishes only ordinary plants.

Following the example of R. THOMAS, BATESON, G. HOWARD and FRUWIRTH, the writer also made experiments on parthenogenesis in tobacco. The negative results which he got invalidate those of R. Thomas and Bateson and confirm those of G. Howard and Fruwirth (1).

All growers know how frequent are anomalies in the tobacco plant. The writer found golden-yellow types and others which were variegated in every degree; there is often fasciation of the stem and epiascidia and hypoascidia occur in the leaf.

Tobacco seeds kept in airtight bottles retain their germination capacity in the tropics for 7 years at least. Germination experiments undertaken to elucidate the question whether the specific gravity affects the germination rapidity and capacity have shown that seeds which float in a solution of

(1) Continuing these investigations the writer has since obtained positive results. A Japanese race", Okonawa", with white flowers, shady leaves and very lengthy period of vegetation produced fruits and seeds without pollination. The fruits are perfectly normal, but the seeds have not yet been studied. If this may not be a definite case of true parthenogenesis at any rate the seeds have well developed integument.

sugar of 12.5 % germinated better than those which sink in this solution. In the latter the seed covers appear to have increased in thickness and weight at the expense of the germ. Those which remained at the surface of the water germinated less than those of the others. (Bull. No. 12).

AGRICULTURAL SEEDS

968 – **A new Method of Determining the Impurity of Cereal Grains, caused by the Presence of Seeds of *Agrostemma Githago*** (From the Work of the Seed-testing Station at Kharkov, Russia). — JANATA A., in *Южно-русская сельско-хозяйственная Газета.* (The Agricultural Gazette of Southern Russia), XVIIth Year, No. 47, pp. 6-8. Kharkov, December 1915.

*Agrostemma Githago* causes damage of two kinds: it infests the fields, and its seeds, mingled with cereal grains, impart to the latter, and the flour manufactured from them, properties which are injurious both to men and animals; it is not yet definitely known what is the origin of this injurious action, but in spite of this, " under conditions in connection with army supplies ", the only conditions recognised by law in Russia, and which serve as a basis for the purchase of cereals, it is provided that the seeds of *A. Githago* may not exceed 0.06 % in weight.

In view of this low percentage, very delicate scales are required to determine it by weight, and also practice in handling them, which forms a serious obstacle to the enforcement of the regulations. With a view to devising an easier and more practical method, experiments were carried out on oats, barley, rye and wheat grains from both small and large farms in 11 districts of the government of Karkov, in order to determine the average weight of the seeds of *A. Githago*, with the object of using the weight so determined in ascertaining the degree of impurity of the grains.

The results of the experiments were as follows:

The total number of seeds of *A. Githago* weighed was 1 820, and the average weight of one seed was 0.0101 grms., but the weight of each seed fluctuated between 0.0128 grms. and 0.0056 grms.

No relation was observed between the weight of the seed of *A. Githago* and the description of cereal or the locality from which it had been taken.

On the other hand, the influence of another factor, the class of the farm, appears to affect the weight of the seeds of *A. Githago*. This rate is rather higher for big farms than for small ones. Considering, however, that this difference is very small and does not exceed the limits of fluctuation in the weight of seeds coming from each of the different classes of farm, the writer takes the view that in practice the average weight of a seed of *A. Githago* may be assumed to be equal to 0.01 grms. for all farms.

Taking this average weight as the basis, it is easy to pass from the number of seeds of *A. Githago* in 100 grms. of grains, to their percentage by weight. If, however, the legal percentage of impurity mentioned above is considered, it is easily seen that in 100 grms. of grains, the number of seeds of *A. Githago* should not exceed 6. The introduction of the numerical method will greatly facilitate the technique of testing the purity of the grain as regards its content in seeds of *A. Githago* This method would also be of use in control measures against this weed.

Possibly subsequent researches may, on various grounds, modify

the average weight found, but according to the writer they cannot invalidate the rational character of the numerical method which he has proposed for practical objects.



969 – **Liquid Manure with Addition of Sulphuric Acid as Spring Manure and Means of Control against Weeds and Lodging of Wheat. Sulphur treatment against the Parasites of Lodged Wheat.** — GIGLIOLI ITALO, in *Bollettino della Società degli Agricoltori Italiani*, Year XXI, No. 9, pp. 257-266. Rome, May 15, 1916.

As early as 1872, LUDWIG KOCK demonstrated experimentally that predisposition to lodging in cereals must be attributed to insufficiency of light during the first few months of growth of the plant, which insufficiency weakens or entirely interrupts the chlorophyll function, besides promoting an accumulation of water in the culms and leaves, which leads to the rapid lengthening of the weakened plant. The result of this is an exuberant growth of the wheat. In the first period of development the growth of the wheat is very dense ; the weeds, which thrive under the shade of the wheat, belong to those species which are adapted to requiring the least quantity of sunlight and which, forcing their roots downwards in the soil more rapidly than wheat, thus find conditions favourable to their development, which still further increases the shortage of light from which the wheat suffers. Moreover, overcast weather, the crowding of the wheat stalks, the want of light and the humidity due to the weeds which cannot be successfully extirpated, favour the growth of parasitic fungi which attack and weaken the watery and soft culms of the wheat at their base.

The conditions in the spring of 1916 were such (wet season with frequent wind, sky often overcast and unsteady weather) that lodging of the wheat was apprehended, and the writer therefore desired to ascertain the causes of this phenomenon, and on the basis of his own experiments and the results of the chemical method for controlling the weeds which infest wheat, he also desired to suggest suitable remedies against lodging.

Farmers in general blame fertility of the soil and excess of manure for immoderate growth of the wheat with consequent lodging, but the Author asserts that it is not the natural or artificial fertility of the soil which directly leads to the lodging of wheat, as he frequently found, for several years in succession, on the experimental field of Suessola (though this field is abundantly and even excessively manured), that wheat never lodged near the edges of the many plots (these were 123), where the plants had a better exposure to the sun, while they were all lodged in the centre of the plot where the vegetation was too crowded. Similar observations, to the effect, namely, that an abundance of nitrogenus manure in the soil does not always produce lodging of grain crops, were made a number of years ago by T. POGGI in Polesina. It follows that in wheat growing the farmer need not be too much concerned at an abundance of manure, provided he prevents the young plants undergoing a rapid and crowded growth which would directly deprive them of light, and takes care to destroy the growth of weeds in good time. The first object may be secured by all such measures as ensure the young wheat the best of all « fertilisers », namely sunlight. With this object in view, the sowing should not be too close or too early, especially if

the soil is very fertile owing to recent manuring of immediately preceding crops intended to enhance its fertility. Sowing should not be done closely and broadcast, but rather in rows or ridges, which increases the light available for the wheat, and also allows of proper weeding and superficial tillage at the beginning of spring, so that between the rows the soil remains perfectly clean and under favourable conditions of aeration. The very old practice of topping wheat when too high, or feeding it to sheep for a short space of time, is a method by which the lower part of the culms may be made to benefit by the reinvigorating and wholesome effect of sunlight.

With regard to the destruction of weeds in good time, in consideration of the results obtained in France, England and Scotland by spraying the wheat (with sulphate of copper, or, according to M. RABATÉ, with dilute sulphuric acid) as a direct method of weed prevention, and on the basis of the experiments carried out by himself in the experimental field of Suessola with human urine to which sulphuric acid had been added, used as a nitrogenous manure, the writer proposes to modify the RABATÉ method of spraying wheat with dilute sulphuric acid, and to combine the treatment for weed control and the destruction of parasitic fungi with the spring nitrogenous manuring. This treatment would be carried out with urine acidified by sulphuric acid, which should be put down as a cover on the wheat, in the spring, and repeated several times if possible, by means of sprayers, as is at present done with sulphate of copper and the ordinary dilute solution of sulphuric acid.

The only economic method of conserving urine is based on mineral salts. The writer has always stressed the importance of agricultural utilisation of human and animal urine, pointing out that urine contains a quantity of nitrogen five times greater (4.40 kg. as against 0.80 kg.) than that existing in solid excrement. He adds that at the present time almost the whole of this urine is wasted, and that in Italy the annual loss may be estimated at 300 million francs.

Passing on to deal with his experiments in manuring with human urine plus sulphuric acid, which were carried out at Suessola. the writer states that this manure was applied with success during the 18 years of continuous cereal growing, two grain crops being taken each year, maize following wheat in the same year. In the course of the successive years, variable quantities of acidified urine were employed, the most usual proportions being 320,249,223 and 178 gallons per acre. The acid solution was in some years applied in the autumn before the wheat was sown, but in most instances it was spread in the spring. The leaves of the wheat were slightly burnt by the drops of caustic liquid, but the wheat rapidly recovered and gave a fine yield.

Taking into account the experiments conducted of late years on the beneficial action of sulphur, particularly in respect to organic soils and different cereal crops on the one hand, and the fungicidal action of this product on the other hand, the writer, in case of vigorous growth of fungal parasites on wheat during the ripening period, advises the sulphuring of

the young wheat with the object of preventing and combating this danger, and at the same time contributing to the soil a substance capable of producing a fertilising action for subsequent crops. Probably the useful action of sulphur in the soil is an indirect one, in which the sulphur, by modifying the microflora and microfauna of the soil, renders the latter more fertile.

As a result of these considerations, the writer proposed to the "Società degli Agricoltori italiani" in Rome to organise co-operative experiments in the spring of 1916, on plots of 50, 120 or 240 sq. yds., chosen in the wheat fields where there is most reason to apprehend lodging and its consequences, in order that farmers might form an exact opinion about the measures proposed for the prevention and mitigation of the injuries due to lodging of cereals. The experiments were to be organised as follows:

I. — EXPERIMENT IN THE USE OF ACIDIFIED HUMAN URINE, APPLIED AT THE RATE OF 220 GALLONS PER ACRE. — The urine will be prepared by collecting it in carboys or vats tarred inside, in which concentrated sulphuric acid is mixed with the urine in a quantity corresponding to 6 pints of acid per 100 pints of undiluted natural fresh urine. The mixture will occasionally be stirred up in order that the entire mass of the liquid may be acidified, and to prevent any fermentation. The spraying (which in small experiments, may be made by brush application) will be carried out in the spots where the wheat is very high, particularly where weeding has not been successful in sufficiently preventing weed growth. In case of need, where wheat suffers greatly from want of light, the treatment may be repeated a second time of an interval of one week or more, but before the wheat emerges from the glumes. For the second treatment, the acified urine might be diluted with an equal volume of water.

II. — EXPERIMENTS IN TREATING WHEAT WITH FLOWERS OF SULPHUR. — Flowers of sulphur (sublimated flowers of best quality) being more readily oxidisable by the slow action of the air and light, should be preferred to sulphur which has been first melted and then ground. Treatment with sulphur should be tried in those places where the wheat stalks are crowded, in moist localities, particularly when the bases of the culms are seen to exhibit a tendency to blacken. The amount applied should be 178 lbs. per acre. This application must be repeated in case of lodging of the wheat, and more especially if a progressive invasion of fungi is observed. As in the case of the vine, the treatment must be carried out in hot and clear weather, with no wind. When the wheat is flowering treatment with sulphur would be out of place, but it can be done before or after. The wheat crop having been got in and weighed, it should be ascertained whether the treatment has rendered the soil more fertile for the crop next in rotation.

970 - **Action of Ammoniacal Salts on the Growth of Barley.** — SODERBAUM H. G., in *Kungl. Landtbruks-Akademiens Handlingar och Tidskrift*, LVth Year, Nos. 1-2, pp. 57-66. Stockholm, 1916.

Ammoniacal salts applied to soil under grass or grain crops, and manured with phosphates of low solubility (bone meal, tricalcic phosphate or phosphorites) give better results than sodium nitrate. Barley is an exception to this rule as it seems to take more readily to nitrates. A special

series of investigations was undertaken by the writer with the specific object of studying and explaining this special behaviour of barley. The article sets out the results of these experiments. 84 glass vessels were used, 50 cm. high and 25 cm. in diameter, each containing 28 kilograms of sandy soil, plus 1.17 grms. of potassium chloride and 0.50 grms. of sodium chloride, which corresponds to 134 lbs. of $K_2O$ per acre. They were divided into 3 groups of 27 vessels each, manured with 3 different kinds of phosphates: superphosphate, basic slag and bone meal, in the respective proportions of 3.65 grms. 7.27 grms. and 3.45 grms. per vessel, which corresponds to 134 lbs. of $P_2O_5$ per acre. To each phosphate there was afterwards added one of the 3 nitrogenous manures: sodium nitrate, ammonium chloride and ammonium sulphate, in the proportions of 4.50 grms., 2.80 grms. and 3.48 grms. respectively, which corresponds to 134 lbs of nitrogen per acre.

Each group of 27 vessels was thus in turn subdivided into 3 groups of 9, differing in the nature of the nitrogenous manure; these 9 vessels were finally divided into 3 groups of 3, one of which received no further treatment, while the other 2 received an addition of magnesium sulphate and magnesium carbonate (magnesite) respectively, in the proportion of 1 grm. and 3.44 grms. Finally three pots were manured with nitrate of soda, without phosphates.

The barley was sown on the 4th May 1915 and the first seedlings appeared on the 11th. Towards the end of the same month, in the series: superphosphate, ammoniacal salts, sulphate of magnesia, it was observable that the leaves were yellowing and a stoppage of growth was taking place, followed in some instances by the death of the plant. These pathological symptoms developed with greater intensity in the case of the ammonium chloride, and less strongly in the presence of ammonium sulphate. When, however, the crisis had once been successfully passed, the plants started growing and developing again normally. In the series: superphosphate, ammoniacal salts, magnesium carbonate, no pathological effect was observed. The crop, collected on the 12th Augusr, gave the results set out in the Table annexed.

The figures compiled in the Table confirm what was already perfectly obvious 3 weeks after sowing. Both in the superphosphate and in the bone meal series, the ammoniacal salts produced results inferior so those brought about by nitrate, and this difference is still more notable if the superphosphate alone is taken into account. Taking as equal to 100 the crop obtained by the use of nitrate, we have for the ammoniacal salts an average of 90 to 80, dropping even to 60 in unfavourable cases. It is interesting to note that with ammonium chloride better results are obtained on the whole than with sulphate, in spite of the serious symptoms of poisoning met with in the early phases of growth of the seedlings. In the series: bone meal, ammoniacal salts, the magnesium carbonate raises the yield, while in the series: bone meal, nitrate of soda, it causes a marked diminution.

If we now examine the basic slag series, the picture presented is quite a different one. All the differences, more or less marked, between the

| | Results of Experiments. Yield for each vessel in grams | | | | | Taking the yield obtained with phosphate and nitrate of soda as equal to 100, the result is: | | |
|---|---|---|---|---|---|---|---|---|
| | Total | Grain | Straw | Weight of 1000 grains | Ratio Straw: grain | Total yield | Grains | Straw |
| | g | g | g | g | | | | |
| Nitrate of soda | 3.9 | 0.5 | 3.4 | 20.8 | 6.800 | — | — | — |
| *Superphosphate:* | | | | | | | | |
| Nitrate of soda | 62.4 | 31.7 | 30.7 | 37.2 | 0.968 | 100.0 | 100.0 | 100.0 |
| Nitrate of soda + sulphate of magnesia | 68.9 | 34.0 | 34.9 | 36.7 | 1.026 | 111.1 | 107.3 | 115.3 |
| » » + carbonate » | 61.9 | 31.9 | 30.0 | 35.3 | 0.940 | 99.1 | 100.6 | 97.4 |
| Ammonium chloride | 13.4 | 7.2 | 6.2 | 25.4 | 0.861 | 16,0 | 21.4 | 10.2 |
| Ammonium chloride + sulphate of magnesia | 15.6 | 8.7 | 6.9 | 26.0 | 0.793 | 20.0 | 26.2 | 12.8 |
| » » + carbonate » | 53.1 | 29.8 | 23.3 | 31.9 | 0.781 | 84.1 | 93.9 | 72.8 |
| Sulphate of ammonia | 8.9 | 4.0 | 4.9 | 20.0 | 1.225 | 8.5 | 11.2 | 5.4 |
| Sulphate of ammonia + sulphate of magn. | 9.8 | 4.7 | 5,1 | 21.8 | 1.085 | 10.1 | 13.4 | 6.2 |
| » » + carbonate » | 59.2 | 33.6 | 25.6 | 33.0 | 0.761 | 94.5 | 106.1 | 81.3 |
| *Basic slag:* | | | | | | | | |
| Nitrate of soda | 66.8 | 33.9 | 32.9 | 34.2 | 0.970 | 100.0 | 100.0 | 100.0 |
| Nitrate of soda + sulphate of magnesia | 66.4 | 33,9 | 32.5 | 35.7 | 0.958 | 99.3 | 100.0 | 98.6 |
| » » + carbonate » | 65.6 | 33.9 | 31.7 | 35.2 | 0.935 | 98.1 | 100.0 | 95.9 |
| Ammonium chloride | 65.3 | 35.0 | 30.3 | 32.5 | 0.865 | 97.6 | 103.2 | 91.1 |
| Ammonium chloride + sulphate of magnesia | 67.6 | 36.1 | 31.5 | 33.5 | 0.872 | 101.2 | 106.5 | 95.2 |
| » » + carbonate » | 67.8 | 36.8 | 31.0 | 34.5 | 0.842 | 101.5 | 108.6 | 93.5 |
| Sulphate of ammonia | 64.4 | 34.2 | 30.2 | 37.3 | 0.883 | 96.1 | 100.9 | 90.8 |
| Sulphate of ammonia + sulphate of magn. | 66.5 | 35.5 | 31.0 | 36.5 | 0.873 | 99.5 | 104.7 | 93.5 |
| » » + carbonate » | 63.4 | 33.3 | 30.1 | 39.0 | 0.904 | 94.5 | 98.2 | 90.5 |
| *Bone Meal:* | | | | | | | | |
| Nitrate of soda | 53.6 | 25.2 | 28.4 | 27.9 | 1.126 | 100,0 | 100.0 | 100.0 |
| Nitrate of soda + sulphate of magnesia | 46.0 | 21.1 | 24.9 | 26.5 | 1.180 | 84.7 | 83.4 | 86.0 |
| » » + carbonate » | 28.7 | 11.3 | 17.4 | 21.6 | 1.539 | 49.9 | 43.7 | 56.0 |
| Ammonium chloride | 28.3 | 16.5 | 11.8 | 31.7 | 0.715 | 49.1 | 64.7 | 33.6 |
| Ammonium chloride + sulphate of magnesia | 21.5 | 12.3 | 9.2 | 29.1 | 0.748 | 35.4 | 47.7 | 23.2 |
| » » + carbonate » | 43.8 | 23.1 | 20.7 | 28.0 | 0.896 | 80.2 | 91.5 | 69.2 |
| Sulphate of ammonia | 18.1 | 10.5 | 7.6 | 22.4 | 0.723 | 28.5 | 40.4 | 16.8 |
| Sulphate of ammonia + sulphate of magn. | 18.1 | 10.3 | 7.8 | 22.9 | 0.757 | 28.5 | 39.6 | 17.6 |
| » » + carbonate » | 47.4 | 24.7 | 22.7 | 27.3 | 0.919 | 87.5 | 97.9 | 77.2 |

ammoniacal salts and nitrate, between the sulphate and carbonate of magnesium, and between the different ammoniacal salts, tend to disappear.

In some cases the ammoniacal salts may produce a crop equal to that obtained with the nitrates, and if, under many other circumstances, the nitrate still retains an indisputable superiority, the fact is probably due to a poisonous action of ammoniacal salts on the growing seedlings. An explanation has been offered for the specifically favourable action of the ammoniacal salts by connecting it with the acid physiological character of the latter. Both in the chloride and the sulphate, the cation $NH_4$ is alone absorbed and utilised by the plant, while the anions Cl or $SO_4$ are only partly fixed, and hence there results a progressive increase of acidity in the plant substance, which is quite sufficient at this stage to produce an action injurious to growth. On these lines the favourable effects of magnesium carbonate in the series : phosphates, ammoniacal salts, might be explained, as likewise the superiority of the slag with large lime contents over the other phosphate manures, etc. All that is here in operation would be merely the neutralising power of the two carbonates, that of magnesia and that of lime.

The following facts however conflict with this hypothesis :

1) The sick plants were young ones, and so small as yet that it cannot be certain that they had absorbed nitrogen to an extent capable of noticeably influencing the composition of their substance.

2) If the weight of the dry substance of the 3 weeks old seedlings which grew in one vessel be taken as equal to 6 grms., there will be in all about 24 grms. of green substance. Out of 24 grms. of fresh substance there is 0.144 grm. of nitrogen, corresponding to 0.375 grm. of hydrochloric acid, which would require 0.51 grm. of calcium carbonate for its neutralisation. Bone meal, however, contains calcium carbonate in the proportion of 1.26 grms, more than twice what is required, and in spite of this it does not suffice alone to counteract the injurious action of the ammoniacal salts.

3) Finally, it was observable that ammonium nitrate, though physiologically a perfectly neutral salt, produces the same effects as magnesium chloride and sulphate, though to a less extent.

Thus the hypothesis of a progressive acidification of the substance of the plants must be dismissed, and it is more in keeping with the facts to assume that what really takes place is a poisonous action of the ammoniacal salts exerted direct on the plant.

Recent experiments appear to show that the carbonates of calcium and magnesium promote the processes of nitrification by bringing about the transformation of the injurious ammoniacal salts into nitrates which are not injurious : hence their beneficial action.

971 - **Oat-growing in the State of Washington, United-States.** — SCHAFER E. G. and GAINES E. F., in *State College of Washington, Agricultural Experiment Station, Pullman, Washington, Bulletin* No. 129, 13 pp., 3 fig. Pullman, March 1916.

After wheat, oats are the most important grain crop cultivated in the State of Washington. During the ten-year period which closed in 1914, the average annual production was 11 629 253 bushels ; the average area oc-

cupied for the same ten-year period was 242 831 acres: the average yield 47.9 bushels per acre. Both the area under oats and the average unit production are in continual increase.

The major part of the oats produced by this State is grown in two widely separated districts: the county of Skagit in the western part, and the counties of Spokane and Whitman in the eastern part.

A study of the conditions peculiar to those sections where oats are grown in large quantities indicates that they thrive better in a rather moist climate. Trials for determining the quantity of moisture required by the different cultivations showed that oats in order to produce a unit of weight of dry substance, require more water than does barley or wheat. The maximum unit yields are obtained where the vegetative period is long and comparatively cool.

Table I sets out the characters of the most important varieties of oats in the State of Washington. They are determined from plants grown at Pullman. Table II indicates the unit productions obtained from the best varieties in open field experiments at Pullman.

TABLE I. — *Characteristics of the principal varieties of oats grown in the State of Washington.*

| Variety | Height of plant | Rigidity of straw | Shape of panicle | Colour of grains | Number of grains per 5 g | Percent of hull | Weight per bushel | Date of ripening |
|---|---|---|---|---|---|---|---|---|
| Abundance . . . | 49.7 ins | 93.9 % | spreading | white | 196 | 29.8 % | 39.0 lbs | 9 August |
| Banner. . . . . | 48.7 | 89.9 | » | » | 198 | 28.4 | 39.7 | 8 » |
| Sparrowbill. . . | 48.9 | 86.9 | » | » | 144 | 29.5 | 42.0 | 7 » |
| Swedish Select . | 28.0 | 86.9 | » | » | 162 | 27.5 | 41.7 | 7 » |
| Sixty Day . . . | 41.4 | 87.2 | » | light yellow | 259 | 25.7 | 35.7 | 25 July |
| Danish . . . . | 50.2 | 87.3 | compact | white | 190 | 27.4 | 39.0 | 13 August |
| Potato . . . . . | 46.7 | 95.2 | spreading | » | 228 | 27.0 | 37.7 | 11 » |
| Grey . . . . . | 52.2 | 86.4 | side panicle | dark grey | 162 | 29.9 | 40.7 | 4 » |
| Regeuerated Swedish Select . . | 49.9 | 92.2 | spreading | white | 180 | 26.3 | 42.3 | 6 » |
| Palouse Wonder | 50.9 | 89.4 | » | » | 171 | 24.9 | 41.7 | 7 » |
| Dun . . . . . | 49.4 | 81.3 | » | » | 186 | 24.3 | 41.0 | 9 » |
| Madison . . . . | 49.8 | 89.2 | » | » | 176 | 25.5 | 42.0 | 7 » |
| Canadian . . . | 49.6 | 91.9 | » | » | 183 | 29.1 | 45.3 | 1st » |
| Lincoln . . . . | 49.7 | 91.1 | » | » | 177 | 28.2 | 46.0 | 30 July |
| Yielder. . . . . | 48.4 | 92.0 | » | » | 166 | 27.9 | 41.3 | 7 August |
| Hulles . . . . . | 42.6 | 86.9 | » | » | 387 | — | 52.0 | 13 » |

TABLE II. — *Yield of some varieties of oats (averages of the 1914 and 1915 crops) and comparison between their Cropping Powers.*

| Variety | Bushels per acre average | Comparative yield * |
|---|---|---|
| Abundance | 81.7 | 111.9 |
| Banner | 78.3 | 107.3 |
| Sparrowbill | 76.5 | 104.8 |
| Swedish Select | 78.2 | 107.1 |
| Sixty Day | 77.2 | 105.8 |
| Danish | 65.4 | 89.6 |
| Potato | 65.9 | 90.3 |
| Grey | 64.0 | 87.7 |

* Taking as 100 the average of all varieties, which was 2 336 lbs. per acre.

972 – **Destruction of the Bean Germ.** — BUSSARD, in *Comptes Rendus de l'Académie d'Agriculture de France*, Vol. II, Year 1916, No. 19, pp. 550-551. Paris, 1916.

A method was required of destroying bean embryos without injury to the cooking value of the seed. The experiments covered three varieties: Algerian white, black and red beans. The experiments proved that when only a few seeds are concerned, immersion for one minute in boiling water is sufficient to deprive seeds which were previously capable of germinating in the proportion of 95 % of all germination capacity. When dealing with several pounds it will be prudent to prolong the immersion for 4 to 5 minutes. This time should not be exceeded, to prevent any cooking action being begun. The scalded beans, on drying in the open air, by spreading them in a thin layer on a flat surface, rapidly give up the water they have absorbed. Within 24 to 28 hours the bean appears to be perfectly dry, slightly wrinkled, and rather duller than the normal. It possesses very good keeping properties, and its cooking qualities are not impaired.

973 – **Some Factors affecting the Cooking of "Dholl" (*Cajanus indicus*).** — VISWANATH B., LAKSHMANA T. ROW and RAGHUNATHASWAMI AYYANGAR P. A., in *Memoirs of the Department of Agriculture of India, Chemical Series*, pp. 149-163, tables 6, diagrams 4, Calcutta, April 1916.

"Red gram" or "Pigeon pea" (*Cajanus indicus*) is grown in India as a food substance, which, in Southern India, is one of the products resorted to by vegetarians in order to increase the nitrogenous content of foods with a rice basis. While peas and other pulses are cooked fresh, the "red gram" is gathered when ripe, is dried in the sun and husked, the grains forming *dholl*, which is cooked and eaten. In the South, the grains after drying are mixed with red earth and water, they are left for one night in this mixture and are then dried in the sun before husking.

The writers have investigated the effect of the composition of the water on cooking. They made use of waters the content of solid matter in which ranged from 0 to 1 225 per 100 000. They observed that the presence of dissolved salts in the water largely affects the time required for cooking, which is longer in the case of salt-charged waters. Furthermore, the adding of bicarbonate of soda, which is commonly done in the South of India, reduces the time of cooking. The rapidity of cooking depends therefore on the one hand on the quantity of dissolved salts and on the other hand on the nature of those salts.

The method which consists in determining the time of cooking is a very primitive one however, which can only give approximate results. The writers adopted a different one based on a measurement of the quantity of starch substance dissolved during cooking. In addition to this weight of starch which passed into solution, they determined the weight of the dry substance of the *dholl* before and after boiling, as well as that of the nitrogenous substances in the *dholl* before and after boiling. The experiments showed that some salts, such as the salts of calcium and magnesium, sodium chloride and hydrochloric acid, sulphates and carbonates reduce the rapidity of cooking, the reduction being approximately proportional to the concentration of the salts. On the other hand, alkaline carbonates and alkalies produce an acceleration. The substances which accelerate cooking most are those which exert a greater solvent action on the albuminoid substances as compared with the starch, which points to the definitive conclusion that the rapidity of dissolution of the albuminoids forms the determining factor.

The writers also made it their work to ascertain whether the accelerating agents did not act by saponification of the fatty substances. They found that the fat content of the dholl exercises but very little influence, if any, on the rapidity of cooking. They furthermore observed that the practice of treating the gram with red earth and water entails quite a marked delay in the rapidity of cooking ; this treatment however is of advantage because it enables the gram to be more easily broken and husked. Finally, they studied the influence of different salts on the liquefaction of starch, utilising rice starch purchased as pure and passed through a 100 mesh sieve ; they found that, among the substances used, only caustic potash increases the quantity of liquefied starch, as compared with pure water ; this quantity is on the other hand reduced by the other products tried, hydrochloric acid, carbonates of sodium and calcium, sulphates of sodium and magnesium, chlorides of sodium, magnesium and calcium.

974 – **Comparative Experiments in the Growing of some Varieties of Potato at the Scientific Agricultural Station of Flahult, Sweden.** – VON FEHLITZEN HJALMAR, in *Svenska-Mosskulturfroeningen Tidskrift*, Year XXX, No. 2, pp. 119-123. Jönköping, 1916. STARCH CROPS

Experiments in sandy and peaty soils with the following varieties of potatoes :

*Early* : Lucya, Midsommar, Harbinger, Juni, Atalanta, Admiral, Nieuwe Muizen ; *Fairly early* : Mossros, Svalöfs 2171 and 3101, Geheimrat Haas, Enorm, Svalöfs 2031; *Rather late*: Gertrud, Non plus ultra, The Faktor, Makalös, Up to date, Höganäs, Freiherr von Wangenheim,

Svalöfs 3 (d'Eldorado), Jubel, Union, Danusia, Svensk Gamda röda, General Cronje, Svalöfs 72 (de Magnum bonum), Hoit Jämtlandspotatis, Eldorado, New Guardian, Hassia, Roode Star : *Late* : Juvel and Böhms Erfolg ; *Very late* : Switez and Svalöfs 1189.

The yield of potatoes was on the average very high : 11.94 tons per acre. Gertrud leads with 18.1 tons, after come Lycya, Mossros and Juvel, with 17 ; 16.4 and 16.2 tons respectively.

In the different groups, the best results were obtained with the following varieties :

Lucya 17 ; Midsommar 13.9 ; Harbinger, 11.9.
Massros 16.3 and Svalöfs 2171, with 14.9.
Gertrud 18 ; Non plus Ultra 15.84 ; The Faktor 15.76 ; Makalös 14.85 and Up to date 14.85.
Juvel 16.25.
Switez 11.2.

The proportion of small tubers averages 9.1 % with a maximum of 20.9 % for Gamba Svenska roda, and after this New Guardian, 19.6 ; Nieuwe Muizen, 17.9 and Boode Star, 17.2 %. The average starch content for the different varieties is shown by the following table :

| Varieties | Maximum | Minimum | Average |
|---|---|---|---|
| Early | 15.55 % | 12.93 % | 13.57 % |
| Fairly early | 16.93 | 13.00 | 14.93 |
| Rather late | 17.85 | 13.13 | 15.23 |
| Late | 17.65 | 16.73 | 17.19 |
| Very late | 18.55 | 17.45 | 18.00 |

The leading position is taken by Switez, with 18.55 % ; next come Roode Star (17.85), Erfold (17.65), Cronje (17.60), Svalofs 1189 (17.45). Non plus Ultra (17.35), Gertrud (17.28) and Makalos (17.03 %).

The following figures in respect to the connection between the nature of the soil and the starch content are of some interest :

| Varieties | Peaty soil | Sandy soil | Sand with little humus | Pure sand |
|---|---|---|---|---|
| Early | 12.96 | 14.02 | 13.65 | 13.66 |
| Fairly early | 13.77 | 15.05 | 15.37 | 15.45 |
| Rather late | 14.32 | 14.97 | 15.70 | 15.95 |
| Late | 15.55 | 17.60 | 17.45 | 18.15 |
| Very late | 15.85 | 18.70 | 18.65 | 18.80 |

The percentage of starch therefore increases when the humic substance is reduced. The maximum yield of starch per acre was obtained with Gertrud (7000 lbs) ; after which come Non plus Ultra (6166), Juvel (6080), Makalös (5671) and Wangenheim (5371 lbs per acre).

It is proposed to continue these comparative experiments for 4 years longer.

975 - **Economic Desirability of Tree Planting in Grasslands.** — SPIRIDONOV N., in *Земледѣльческая Газета* (*Agricultural Gazette*), No. 12 (128), pp. 310-311. Petrograd, March 1916.

Observations effected during a period of 25 years on more than 44 hectares of the zone of "grey earths" in Russian Europe, highly suitable for sylviculture (1). The above area was divided into 18 meadows, part of which was already free from trees when purchased; the remainder being sown, the trees being retained as far as possible. The soil is peaty, sandy or "podzol".

During two or three periods of great drought, the value of the treeless grasslands fell off 12 to 50 %, while that of the grasslands planted with trees increased 16 %. In rainy years, the latter exhibit much better vegetation than that of grasslands without trees.

At the beginning of the period of utilisation the treeless grasslands were the best as regards vegetation; about 12 years afterwards however the composition and appearance of the vegetation suddenly grew worse, and at the present time (25 to 30 years after) these grasslands have the aspect of moorland covered with *Nardus stricta* L. Tillage, manuring and sowing with good forage crops were not effective in producing a permanent improvement of these grasslands.

The turf layer was broken up at a suitable moment, and the grasslands were ploughed, after which various crops were sown but the result obtained was always the same. In the first year the grassland produced 35.8 cwt of hay per acre containing 80 % of leguminous plants; in the 2nd year it produced about 17.9 cwt. of hay in which Gramineae predominated; in the 3rd and 4th year the crop became poor; it afterwards fell off rapidly to such an extent as to be below that of the uncultivated grasslands.

In the grasslands planted with leafy trees (in this case birches) the vegetation begins to improve towards the 12th year after they have begun to be utilised, and attains its maximum development between the 16th and the 20th year. Then, when the tops of the trees are in contact as well as their roots, there is a rapid retrogression: vegetation becomes sparser, the leguminous plants disappear and the crop suddenly declines. If howeever during this period the trees are felled, there is for 3 or 4 years a fine hay crop, rich in *Lathyrus pratensis*, *Trifolium montanum*, and, it appears, in *T. incarnatum*. This operation however is not desirable. It is better to rest content with poor crops for 6 to 8 years (which crops, however, never fall below the level of those yielded by *Nardus stricta* in the treeless grasslands), after which the trees are felled. After 28 years, each birch tree, according to the writer's investigations, yields 2.8 cubic metres of wood apart from branches. In short, these observations hold out the prospect of obtaining at the same time a wood which, at the rate of 144 trees per acre, will yield in about 28 years 400 cubic metres of wood and also good hay crops.

(1) The "grey earths" of the wooded and steppe zone form the transition from the "podzol" zone to that of "tchernoziom". They precede the steppes. In European Russia their width ranges from 62 to 124 miles. (*Ed.*)

The above observations relate to grasslands very irregularly planted with birch trees, the roots of which spread out near the surface of the soil and deprive it of moisture. When the roots of neighbouring trees interlace in the 20th year, the falling off in the hay crop is probably due to shortage of water. If, however, instead of birches the grassland is planted with deep-rooted alders, this phenomenon does not take place. Round about the alders the vegetation is of better appearance than round the birches, and is higher ; it extends right up to the tree trunks without any reduction in height or change in colour, while around the birches circles of weaker and discoloured vegetation form which extend in the course of time. With regard to the greater care required by the upkeep of high forest alders as compared with that demanded by birch trees, the desirability from the economic point of view of planting grasslands with alder is brought out clearly : with 220 alders per acre a good high crop may be maintained without manuring and without any hindrance to the growth of the grass and the use of the reaper. The trees may be replaced every 14 or 15 years without injuring the grassland, by planting young trees 5 or 6 years old in the clear spaces 7 years before felling the old ones.

Anticipating the objection of insufficiency of sunlight on a piece of grass land planted with trees, it is stated that though this objection may be true for a wet climate it is not true for a dry climate, where excessive sunshine results rather in burning the grass than promoting the formation of chlorophyll.

Finally, stress is laid on the importance of the potassic and phosphatic manure formed by the large quantities of dead leaves which a forest 17 to 22 years old is capable of yielding the elements of which are taken from the subsoil.

Although these observations do not constitute really strict scientific experiments, they nevertheless enabled the writer to conclude with certainty that grasslands planted with trees or wooded meadows will on the average yield more hay than grassland without trees ; furthermore it supplies timber. It is, however, necessary, to repeat the experiments with cultivation of the alder tree in regular lines to the number of 184 to 216 trees per acre of grassland, doing the same with the birch and the oak, in order to ascertain definitively whether the combination is desirable.

976 – **Moisture Content and Shrinkage of Forage and the Relation of these Factors to the Accuracy of Experimental Data.** – VONALL H. N. and MCKEE ROLAND, in *United States Department of Agriculture*, Bulletin No. 353, 37 pp. Washington, D.C., March 13, 1916.

The variation in moisture content in field-cured forage often gives rise to errors greater in amount than the differences in yield between improved varieties or different methods of culture. A study of the use of samples in correcting forage yields indicates the following results :

1) Air-dried samples are a little less accurate than oven-dried samples, but the difference is so small that the air drying of samples can be relied upon for all practical purposes on correcting forage yields.

2) Much greater extremes are found in the samples of field-cured

material than in the samples of green material, indicating that duplication of samples is more important in the former than in the latter.

3) Corrections by means of samples can be accurately made from either green or field-cured material, provided care is used in sampling.

4) Considering accuracy of results, facility of handling, and ease in figuring percentages, 5-pound samples of field-cured material and 10-pound samples of green material are recommended as the most desirable sizes for practical use

5) Samples need not be duplicated more than three times.

6) The percentage of moisture in the different crops at that period of growth when they are ordinarily harvested for forage was as follows: Alfalfa at Chico, Cal., 75 to 78 per cent., average 76.9 per cent; Alfalfa at Arlington Farm, Va., 74 to 76.5 per cent., average, 75.2 per cent.; Tall oat-grass and orchard-grass mixture at Arlington Farm, Va., 71 to 73 per cent., average, 72 per cent.; Timothy at New London, Ohio, when in full bloom, average, 67.2 per cent. Sorghum at Amarillo, Tex., 70 to 63 per cent., average, 71.2 per cent. These percentages are probably near the average for each crop, but the fact that McKEE found 75.8 per cent. and FARREL an estimated 79.5 per cent of moisture in alfalfa indicates that it will be impossible to establish any arbitrary percentage of moisture in the green plant as a basis for correcting forage yields.

7) The average amount of moisture in field-cured material was as follows: Alfalfa 2.3 per cent.; timothy, 20.3 per cent.; tall oat-grass and orchard-grass mixture, 29 per cent.; sorghum, 43.2 per cent. The moisture content of field-cured material varies so widely that it cannot be foretold with accuracy.

The use of the sample method in correcting forage yields would greatly assist in standardizing agronomic data and do much to promote greater accuracy in field tests.

The system of correcting yield data by the use of air-dried samples is of most value in succulent crops like sorghum and Sudan-grass and is of least value in fine-stemmed plants like millet, which cure quickly and rather completely.

The relation of the moisture content to the stage of development in the plants was studied in alfalfa, timothy, and sorghum. The results were as follows:

1) Alfalfa at Chico, Cal.: Very young (12 inches high), 78.9 per cent.; one-tenth in bloom, 77.1 per cent.; full bloom, 74.6 per cent.; past full bloom, 73.4 per cent.

2) Sorghum at Amarillo, Tex.; Very young, 90.6 per cent.; shooting for heads 87.1 per cent.; beginning to head, 84.8 per cent.; full bloom, 80.4 per cent.; seed ripe, 75.3 per cent.

3) Sorghum at Hays, Kans., varied from 89.2 per cent. when very young to 73.2 per cent when seed was ripe, showing practically the same gradations as at Amarillo, Tex.

4) Timothy at New London, Ohio: Very young (10 to 12 inches high) 77.5 per cent.; just heading, 76.6 per cent.; early bloom, 71.4 per cent.;

full bloom, 67.2 per cent.; leaves fading, 58.6 per cent.; seed mature, 51.2 per cent.

5) The excessive percentage of moisture in young sorghum explains the very chaffy character of sorghum hay when the crop is cut too soon, and the 90 per cent loss in weight is an additional reason why sorghum should be fairly mature before it is harvested.

6) The moisture content of any crop at a given stage of maturity is not constant, but may vary with the conditions under which the crop is grown.

A study of the rate of loss of moisture in forage during the early stages of curing shows the following results :

| Crop and location | Moisture after : | | | | |
|---|---|---|---|---|---|
| | ½ hour | 1 hour | 2 hours | 3 hours | 4 hours |
| | per cent. | per cent. | per cent. | per cent. | per cent. |
| Alfalfa at Chico. . . . . | — | 17 | 35 | — | 69 |
| Alfalfa at Arlington Farm . . . | 6 | 14 | 23 | 28 | 32 |
| Tall Oat grass and orchard grass at Arlington Farm. . . . . | 5 | 12 | 24 | 30 | 34 |
| Timothy at New London. . . . | 6 | 10 | 18 | 25 | 30 |
| Sorghum at Hays . . . . . | 2 | 5 | 9 | 12 | 13 |

The approximate losses in the different crops were.

1) The rate of loss of moisture after cutting differs in different varieties of the same crop, as well as in different crops.

2) Although the Arabian alfalfa loses moisture faster than the Peruvian or ordinary alfalfa in the first one or two hours after cutting, still the total percentage of moisture is about the same for the three varieties.

3) A high percentage of leaf surface in alfalfa varieties is correlated with a rapid loss of moisture immediately after cutting, but it does not indicate a high moisture content.

Studies of the variation in the moisture content of growing alfalfa during a single day at Chico, Cal., show an average of 1 per cent. more moisture in the alfalfa at 8 o'clock a. m. than at 3 o'clock p. m.

Studies of the shrinkage in hay after storing and variation in moisture content due to changes in atmospheric humidity made with baled oat hay at Chico, Cal., and loose timothy hay at New London, Ohio, indicate results as follows :

1) At Chico, Cal., where the atmospheric humidity changes radically from the dry summers to the wet winters, baled oat hay showed a shrinkage in 1914 of 9.1 per cent. between June 1 and August 31, and a gain in weight from August 31, 1914, to February 25, 1915, of 5. 9 per cent. of the original weight.

2) The results at Chico, Cal., indicate that even baled hay responds noticeably to changes in atmospheric humidity, and that hay dealers are justified in taking into account the shrinkage of their hay when fixing prices.

3) The results secured at New London, Ohio, with loose timothy indicate a shrinkage of 8.6 per cent. in one lot and 15.6 per cent in another lot, when the hay was stored in a barn for about three months. The effect of a week of rainy weather was indicated by an increase of weight in the loose hay.

977 – **Investigations into Factors affecting the Handling of Wheat Hay, including a Study of its Digestibility.** — PERKINS ARTHUR I., PHILLIPS J. H., SPAFFORD W. I. and MAY W. S., in *Department of Agriculture of South Australia, Bulletin* N° 82, pp. 1-38, 33 tables + 3 fig. Adelaide, 1914.

From the investigations, which were conducted during the years 1911-1913, the writers have drawn the following general conclusions :

The yield of a crop of wheat cut down for hay will vary considerably according to the stage of development to which the crop has attained. The combined results of the two seasons' experiments show that the average increase in yield above that of a crop cut in the full bloom stage to be.

| | | | | | | |
|---|---|---|---|---|---|---|
| 20.31 | per cent. | in the case | of hay cut | 6 | days after | full bloom |
| 24.02 | » | » | » | 13 | » | » |
| 36.04 | » | » | » | 21 | » | » |
| 32.62 | » | » | » | 28 | » | » |
| 21.90 | » | » | » | 35 | » | » |
| 14.24 | » | » | » | 42* | » | » |

It follows, therefore, that maximum yields will be secured from cuts taken about three weeks after full bloom, at a time when the grain is just about to leave the milky stage. In this connection it should be recollected that these three weeks have reference to an early wheat grown under conditions of climate such that there elapses a period of six weeks between full bloom and the ripeness of the grain. In a general way it is perhaps better to state that maximum hay yields may be expected from cuts taken when the grain is about to leave the milky stage and enter upon the dough stage. In the three weeks that follow full bloom time, total increase in hay yield is distributed between ears on the one hand, and culms, and flag on the other, but in uneven proportion, the ears increasing in weight at a far more accelerated ratio than the culms and flag. The following figures will serve to indicate the nature of the increases gained respectively by ears on the one hand, and by culms and flag on the other, over and above their original weight at full bloom.

| | Ears. | Culms & Flag. |
|---|---|---|
| At full bloom time | 100.00 | 100.00 |
| Six days after | 137.77 | 118.28 |
| Thirteen days after | 153.10 | 119.98 |
| Twenty-one days after, | 240.75 | 120.48 |
| Twenty-eight days after | 321.05 | 100.70 |
| Thirty-five days after | 337.00 | 92.54 |
| Forty-two days after (grain ripe) | 340.40 | 83.33 |

* *Grain ripe.*

Therefore, when the grain begins to leave the milky stage there is not only a great disproportion between the relative weights of ears on the one hand, and culms and flag on the other, but relatively to the period of full bloom, a loss of weight in the latter, which although at first compensated for by a corresponding increase in the weight of the ears, becomes in the end an actual loss of what might have been good feeding material had the crop been cut earlier. In other words, hay cut after the milky stage of the grain tends more and more to become ill balanced hay, in which the culms and flag rapidly lose their feeding value; whilst if the hay is not cut at least a fortnight earlier than the ripening of the grain there arises to the grower an actual loss of hay.

In the matter of chemical composition the chief differences between hay cut at full bloom, and later cuts are as follows: — 1) Progressive decrease in the percentage of mineral matter and corresponding increase in that of organic matter characterises the gradual ripening off of the crop. 2) The percentage of proteins shows a tendency to rise during the first three weeks; thereafter it steadily declines to the ripeness of the grain. 3) The percentage of fat appears to remain more or less stationary throughout the whole period. 4) The percentage of carbohydrates rises regularly and steadily in the ears thoughout the six weeks. It is balanced by a corresponding regular decrease in culms and flag. 5) Conversely, whilst the percentage of fibre steadily rises in culms and flag, it equally steadily declines in the ears.

A heavy loss of dry matter was noted in the last two or three weeks of the development of the wheat crop, a loss which attained to 22.9 per cent of the maximum cut in 1911, and 6.41 per cent, of the maximum cut in 1912. This loss, no doubt, must be attributed chiefly to the fall of the exhausted flag, and to a less degree to occasional shaking out of grain and other accidental causes; to the weakening or suspension of the assimilation function; and to the occasional leaching action of rain on a dry, porous tissue. In each year, however, we found that the proportional loss of mineral matter was considerably greater than that of organic matter, and we infer therefrom that as maturity advances there must be some sort of migration of the mineral matter towards the root system.

The loss of weight on drying of a wheat hay crop becomes gradually less and less as the ripening of the grain is approached. It is represented by close on three-quarters of the green weight of the crop in the full bloom stage, and by less than one-quarter of the green weight when the grain is ripe.

The percentage of moisture retained by wheat hay varies slightly with the conditions under which the hay was dried. Generally speaking, however, early-cut hay retains slightly more moisture than late-cut hay. In round figures, 10 per cent. represents the average moisture content of South Australian wheaten hay.

When a crop of hay is left to dry in a field, the loss of weight observed is not exclusively the result of the evaporation of water. Intimate chemical

reactions set up in the drying cells of the plants, the ultimate result of which is the destruction of more or less organic matter.

For wheaten hay, losses in this direction may attain to slightly over 1 ½ per cent. of the original green weight, and they are connected chiefly with the breaking down of carbohydrates.

Direct digestion experiments show that hay cut at full bloom is more highly digestible than any hay cut at later periods, and that in general the digestibility of wheaten hay decreases by regular steps as the period of complete ripeness is approached. In this connection there is a difference of over 12 per cent. between the digestibility of hay cut at full bloom and that of hay cut a week before the ripening of the grain. This superior digestibility of wheaten hay cut at full bloom holds good all long the line, with the exception, perhaps, of the doubtful case of the mineral matter. The regular decline in the digestibility of hays cut at later periods is most marked in the case of proteins and fibre. Carbohydrates are, on the whole, rather erratic in their behaviour, and perhaps on the whole they may be considered more or less stationary in their direct digestibility. The albumenoid ratio (a ratio found to exist in any foodstuff between the digestible proteins on the one hand, and the balance of the digestible non-nitrogenous organic matter on the other) is narrower and more favourable in character in the earlier cut hays than in those in more advanced stages of development. This arises from the more highly digestible condition of the proteins in the less mature cuts of hay, and the overwhelming preponderance of carbohydrates in the later cuts.

It appears that there is nothing to be gained and much to be lost, in deferring the cutting of wheaten hay until the grain begins to enter upon the dough stage. It involves, as a rule, both a reduction in total yields of hay and a reduction in quality represented by a reduced digestibility and a wider albumenoid ratio. Assuming that hay-cutting operations can be completed within a week to 10 days, these operations should be put in hand not later than a fortnight after full bloom.

These experiments amply confirm the value of the usual commercial standard by which hay is judged, viz. colour. It may be taken for granted that any hay that is not of good bright green colour is of inferior quality for feeding purposes, although it might make excellent litter.

978 – ***Paspalum* spp., Forage Plant in Argentina.** — *Gaceta Rural*, IX^th^ Year, No. 107, pp. 685-689. Buenos Aires, June 1916.

The genus *Paspalum* of the family of Gramineae comprises more than 300 species scattered throughout the temperate, sub-tropical and tropical regions of the entire world, one half being in America (100 in Brazil and about 40 common to Brazil, Argentina and Uruguay). In Argentina, from the province of Jujuy to that of Buenos-Aires, several of the principal species of *Paspalum* occur fairly widely, comprising those regarded as the softest and best forage plants, for instance: *P. dilatatum* Poir., *P. notatum* Flügge, *P. plicatulum* Kuth (Mich.), *P. uruguayense* Arech., *P. pumilum* Nees. All these species form excellent pasturage, particularly *P. dilatatum saccharifierum* ("granilla melosa" or "pasto miel"), *P. notatum* and

*P. plicatulum*, which is peculiar to sandy soils. There are also the following marsh species: *P. Larrañagai* Arech., *P. multiflorum* Doell., *P. fasciculatum* Willd., *P. ferrugineum* Trin., which may serve for pasturage during times of drought; finally, *P. scoparium* Flügge and *P. barbatum* Nees, thrive on the patches of moist soil which occur on stony surfaces.

*Paspalum* grasses are generally sown in autumn or spring with other forage plants, preferably with clover or lucerne in the proportion of 5 to 7 lbs per acre, after giving a good dressing to the soil. It is best to feed them green to the livestock before complete flowering. For this purpose they are cut at that time, or fed to cattle off the land at an early moment, after which a second crop is obtained. *Paspalum* may be sown alone, in order to improve existing grasslands, or for seed production. In the latter case sowing is at the rate of 26 $^3/_4$ to 35 $^3/_4$ lbs per acre, which yields a crop of 357 to 535 lbs of seed. The seeds are also cropped from plants growing wild on stubble.

The analytic data contained in the appended Table are interesting, as they indicate the nutritive value of some of the principal species of *Paspalum*.

*Chemical Composition of some species of Paspalum and other Forage Plants.*

| Species | Origin | Ash | Total nitrogen | Crude protein | Albuminoids | Fat | Crude fibre | Carbohydrates |
|---|---|---|---|---|---|---|---|---|
| *Paspalum dilatatum.* | Lomas de Zamora . . | 12.45 % | 1.83 % | 11.17 % | — | 2.20 % | 31.21 % | 41.91 % |
| » » | Jujuy . . . . . | 11.91 | 1.47 | 9.23 | 6.88 % | 1.16 | 27.39 | 50.25 |
| *P. notatum* . . . . . | Lincoln (Buenos-Air.) | 12.45 | 2.09 | 13.06 | 9.32 | 2.47 | 24.15 | 47.50 |
| » » . . . . . | Santa Fé . . . . . | 9.29 | 2.09 | 13.06 | 9.32 | 2.58 | 31.35 | 43.68 |
| » » . . . . . | Entre Rios . . . . . | 10.58 | 1.10 | 6.87 | 5.98 | 0.96 | 37.10 | 44.50 |
| *P. Larrañagai* . . . . | San Luis . . . . . | 12.40 | 1.52 | 9.46 | 6.84 | 0.94 | 37.43 | 39.77 |
| *P. pumilum.* . . . . . | Entre Rios . . . . . | 9.06 | 1.22 | 7.65 | 6.79 | 1.30 | 27.12 | 44.79 |
| *Lolium perenne* L. . | Buenos-Aires . . . . | 10.18 | 1.85 | 11.56 | 6.56 | 2.27 | 33.48 | 42.51 |
| » » | Santa Fé . . . . . | 11.50 | 2.10 | 13.12 | 7.93 | 2.10 | 31.57 | 41.71 |
| *Lolium brasilianum* Nees . . . . . | 6 specimens. . . . . | 11.69 | 2.11 | 13.18 | 8.53 * | 2.83 | 25.44 | 46.89 |
| *Bromus unioloides* H. Bet K. . . . . | 16 specimens . . . . | 11.76 | 2.57 | 15.96 | 10.26 ** | 2.83 | 29.50 | 39.91 |

* Average of 3 analyses. — ** Average of 6 analyses.

Calculating the nutritive ratios for 3 typical specimens, we have:

| | | |
|---|---|---|
| *Paspalum dilatatum* | (Lomas Zamora) . . . . . | 1 : 6.1 |
| *Lolium perenne* | (Buenos-Aires) . . . . . | 1 : 7.3 |
| *Lolium perenne* | (Santa Fé) . . . . . | 1 : 6.1 |

that is to say, on comparing with Perennial rye grass (*Lolium perenne*) which grows in the same parts, *Paspalum dilatatum* is not inferior in value from the point of view of richness in useful elements and mutual proportions of the latter. If this fact is taken into account, and also the abundance and good quality of the forage supplied during the entire year and the preference cattle show for it, one is forced to the conclusion that it is at least equal to English rye grass which has been imported into the country.

The same may be said of other wild forage plants occurring widely in Argentina, which might very well and at very small cost take the place of the numerous exotic species which Argentine breeders are endeavouring to introduce into the country at heavy expense.

979 - **Natal Grass (*Tricholaena rosea*), a Forage Plant for Hot Countries.** — TRACY D. C., in *U. S. Department of Agriculture, Farmer's Bulletin* 726, 16 pp., 4 fig., Washington, M, S. June 8, 1916.

*Tricholaena rosea*, called "Natal Grass" in the United States, is a native plant of South Africa, but long acclimatised in Florida. For some years past its cultivation in the sandy soils of that State has increased, and has also spread along the coast of the Gulf of Mexico as far as South Texas. In the United States this forage plant can only be cultivated right in the south. It is the most valuable forage plant hitherto found for the sandy soils of Florida, and will no doubt prove equally valuable in Southern Texas and further west in Arizona, as also in California.

*Tricholaena rosea* is a perennial, but does not survive the winter everywhere when the temperature falls much below 0° C. Heavy frosts destroy the fallen seeds, rendering natural propagation of the plant impossible. In Florida it is usually grown as an annual. The soils most suited to it are well-drained sandy soils. In compact soils it does not appear to spread itself well, It is suitable as a summer crop following on winter crops such as oats or kitchen garden plants. When a sandy soil has been sown with *Tricholaena rosea* it is not necessary to re-sow if the land cultivated in autumn has produced a winter crop and has been cultivated or harrowed again in the spring. If the soil on which this forage plant is grown is not used to produce a winter crop and is not cultivated, it will furnish an early spring crop and a large number of cuts in the course of the year. The total hay crop, however, will be about equal to that obtainable by growing a winter crop. The average unit production is 40 to 56 cwt. of hay per acre or about 13.5 cwt of hay per acre per crop. In good years, crops twice as great as these are obtained.

*Tricholaena rosea* is not adapted for forming a pasture, and ranks poorly as a grazing grass. Its hay is excellent ; it dries easily, is highly nutritive, looks good and is much liked by the animals. Its composition is as indicated in the appended Table, as compared with the average composition of Timothy (*Phleum*) resulting from analyses of 272 samples.

*Chemical composition (relatively to dry matter) of the hay of Tricholaena rosea and Phleum pratense.*

| | *T. rosea.* | *P. pratense* |
|---|---|---|
| Cellulose | 40.72 % | 32.86 % |
| Ash | 5.56 | 5.82 |
| Protein | 8.25 | 7.87 |
| Nitrogenous extract | 43.47 | 50.40 |
| Fats (ether extract) | 1.99 | 3.05 |

When the seeds crop is looked after and carefully handled, its quality is excellent in Florida. For proper keeping of the seed it is essential to dry it rapidly and completely.

*T. rosea* exhibits numerous and very divergent varieties: the United States Department of Agriculture is at present carrying out a field trial with a view to producing standard improved types. Some varieties were also recently introduced into Brazil.

980 – **Experimental Studies in Italy, for determining the Cultivation Value of Two Wild Lucernes.** — JOSA G., in *L'Italia agricola*, 53rd Year, No. 6, pp. 250-253, 5 fig. Piacenza, June 15, 1916.

Scythe lucerne (*Medicago sativa* var. *falcata*) and variable lucerne (*M. sativa* var. *varia*) have repeatedly been pointed out by ancient and modern Italian agriculturists as being likely plants for forming artificial grasslands on poor, dry, barren soils, especially in the Southern provinces. Up to the present, however, no cultivation trials had been carried out. The latter have now been undertaken by the Office of Travelling Agricultural Lecturers at Campobasso with seeds originating partly from the Abruzzi and partly from the province of Campobasso.

In the first year of cultivation (1911), there were no noteworthy weather events; 1912 and 1913 were exceptionally dry years; the two following years were very rainy. Growth was from the outset poor and tardy in the case of *Medicago sativa* var. *falcata*, mediocre for variable lucerne and luxuriant for the *M. sativa* cultivated as a standard of comparison. These differences were maintained during the entire period of the experiment and were confirmed by the crop. The following are the conclusions:

1) Scythe lucerne possesses very little cultivation value and both for this reason and from other considerations, such as the difficulty of getting in the crop and the coarse quality of the forage, it can only be used in mixtures intended for the formations of permanent grasslands;

2) Variable lucerne is more promising, and if it were selected and improved by cultivation it might perhaps replace *M. sativa* in all those cases, though they are few, for which the latter is unsuited;

3) Wherever it is possible to cultivate *M. sativa* even with mediocre results, the latter always exceeds what may be anticipated from the wild lucernes.

981 - ***Medicago orbicularis*: Attempts at Introduction into the United States.** — McKee Roland, in *U. S. Department of Agriculture, Farmer's Bulletin*, 730, 9 pp., 3 fig. Washington, D. C., June 2, 1916.

*Medicago orbicularis*, indigenous to the Mediterranean region, was introduced into the United States in 1899 by the Foreign Seed and Plant Introduction Office of the Department of Agriculture. In the following years, several other small lots of seeds of this species were introduced from the same region, but practically all the experimental work carried out was done with seeds from a sample which arrived from Algeria in 1902.

*Medicago orbicularis* has been tested on a larger scale in California, where it proved to be peculiarly well adapted. In the Southern States of the Union it was not sufficiently dried to allow of determining its value definitely. The work accomplished, however, already indicates that it is perhaps possible to use it with success in all those parts which enjoy a very mild climate, and where *Medicago arabica* is at present grown.

In order to thrive, *Medicago orbicularis* requires a temperate climate, the winter temperature of which does not go below — 10° C. It is not exacting as regards soil and humidity, and thrives under very diverse conditions. As a pasture plant it is especially valuable in the most temperate districts of the south-west of the United States, where it is preferable to *M. hispida denticulata* and *M. arabica*. It is easy to lay down land to pasture with *M. orbicularis* as it requires nothing beyond sowing. If, however, the soil does not already contain the bacteria giving rise to the formation of leguminous nodules, they must be inoculated into it. This inoculation is not necessary in those soils where *Medicago arabica* or *M. sativa* have already been grown. *M. orbicularis* gives good hay, but it is difficult to mow owing to its drooping habit. Usually it gives good seed crops, but the drying and threshing of the hay are rendered difficult owing to the fact that the seeds fall readily. In trials carried out at Chico, California, from 1908 to 1911, *M. orbicularis* gave as the average of this four-year period 8.4 cwt. per acre of husked seeds. *M. arabica* grown as a standard of comparison, gave during the three-year period 1908-1910 an average of 3.1 cwt. per acre.

The Author demonstrated by experiment that husked seed kept in ordinary stores had their germination capacity reduced by about one half after 3 or 4 years ; after 7 years it was reduced to 1/3 of its value. On the other hand the one year old seeds possess a good germination capacity (in 1911 it was 91 % with 4 % of hard seeds).

As a green manure, *M. orbicularis* possesses practically the same value as *M. arabica* and *M. hispida denticulata*.

982 - **The Green Pea as a Forage Plant in North America.** — Vinall H. N., in *United States Department of Agriculture, Farmer's Bulletin*, No. 690, 24 pp., 16 fig. Washington, D. C., October 8, 1915.

The green pea (*Pisum sativum*) is cultivated widely in North America as a forage plant and is then called " field pea " or " Canada field pea ". The cultivation of the green pea is of very ancient date, but up till latterly it was intended exclusively for human food. It is now widely cultivated in Canada as a forage plant, as well as in the States of the North American

Union, and, further south, in the high regions of the Rocky Mountains. It deserves to be more extensively grown in the Southern States of the Union.

To enable the forage green pea to thrive, there must be a temperate season coinciding with its period of growth. Great heat is much more injurious than frost, which is only disastrous if the plant has begun to form its pods. The best crops are obtained on clayey-sandy soils. The best varieties are : among the early ones, " French June "; among the mid-season ones, " Golden Vine " ; and among the late varieties, " Canadian Beauty " and " Blue Prussian ". Among new varieties, " Carleton " and " Bangalia " are preferred in the North-West States of the Union. In the Northern States, sowing must be carried out in spring as early as possible, that is, as soon as the soil can be worked. In the Southern States, sowing must take place in the autumn or at the end of winter. In wet parts, from 89 to 210 lb. of seed per acre is required, and in dry regions 60 to 180 lb per acre suffice. Sowing in rows is preferable. For hay production, it is desirable not to mow until the pod is well formed. For seed production, cropping must be delayed until the latest pods have begun to turn yellow. Mowing and haymaking may be carried out by ordinary machines with special devices fitted on them (described and explained by the writer) to prevent the teeth of the mower getting choked up, to lift the stalks and enable the cutting-bar to pass beneath, for binding, etc. Threshing may be carried out by means of an ordinary grain separator from which the majority of the concave teeth have been removed. The speed of the drum is thus reduced.

In San Luis Valley (Colorado) it has been found that the green pea forms good pasture for pigs and sheep. This forage plant deserves to be tried in other districts where grown, particularly those lying near mountain ranges.

When the green pea is grown for forage it is best mixed with oats or rye.

The green pea seed has been successfully used as a concentrate in rations for the production of meat or milk in cattle, sheep, pigs and dairy cows. The waste from green pea canning factories is sometimes put into silos and good results obtained, particularly with dairy cows.

In the citrus plantations of Southern California, the green pea has furnished a good green manure.

983 - **Cytisus as Forage** (1). — PEREZ GEORGES V., in *Bulletin de la Société Nationale d'Acclimatation de France*, 63rd Year, No. 6, pp. 217-220. Paris, June 1916.

The farmers of the island of Palma in the Canaries, use certain species of *Cytisus* as forage, namely " Tagasaste " (*Cytisus proliferus*, var. *palmensis* Christ), " Gacia " (*Cytisus maderensis* Masf. = *Teline stenopetala* Webb and Berthelot) and also " Herdanera " or " Gacia blanca " (*Cytisus pallidus* Sprague = *Genista splendens* W. and B.).

The writer protests against those prejudices which maintain that neither horses nor cattle will touch these plants, that the seeds of the latter will not grow, and that all forms of *Cytisus* are poisonous like laburnum.

(1) See *B.* June 1916, No. 640. (*Ed.*)

Instead of allowing the Tagasaste to grow into a tree, it must be cut two or three times per year to a height not exceeding a yard from the ground, in order that its tender branches may be more abundant. As with many other forages, animals must become accustomed to it, but once the taste has been acquired they continue very fond of it. Chopped and mixed with dried straw it is a perfect food comparable with lucerne. Tagasaste grows in mountainous and stony soils from which the plough is precluded, and resists drought admirably, enriching the soil by its roots which fix atmospheric nitrogen.

In the opinion of the writer it is highly desirable that these plants should be more extensively grown as forage in the Mediterranean basin, particularly in regions where the rainfall is scattered over wide intervals or where the summer is very dry, and consequently livestock breeding is very difficult.

984 - **Comparative Experiments on the Growth of some Varieties of Carrot at the Scientific Agricultural Station of Flahult, Sweden.** — VON FEILITZEN HJALMAR, in *Svenska Mosskulturföreningen Tidskrift*, Year XXX, No. 2, pp. 128-129. Jönköping, 1916.

Experiments in sandy soils with the following varieties, which were lifted from the 10th to the 13th October.

| Varieties | lbs per acre of roots | Weight per Imperial bushel in lbs. | Average weight of one root in lbs | Tops in tons | Dry matter % | Dry matter lbs per acre | Relative yield: Roots 1914 | Roots 1913 | Roots 1912 | Roots 1911 | Roots 1910 | Dry matter per acre 1914 | Dry matter per acre 1913 | Dry matter per acre 1912 | Dry matter per acre 1911 | Dry matter per acre 1910 |
|---|---|---|---|---|---|---|---|---|---|---|---|---|---|---|---|---|
| Gul jätte (Champion) | 35 060 | 44.8 | .6 094 | 87.6 | 11.75 | 4 124 | 100 | 100 | 100 | 100 | 100 | 100 | 100 | 100 | 100 | 100 |
| » » (Weibull) | 33 901 | 44.8 | .6 864 | 93,9 | 12.18 | 4 124 | 96 | 98 | 102 | 90 | 82 | 100 | 102 | 107 | 88 | 96 |
| Extra hvit jätte » | 32 920 | 43.2 | .7 106 | 121.9 | 11.25 | 3 704 | 94 | 104 | 99 | — | 92 | 90 | 116 | 96 | — | 96 |
| Supra hvit jätte » | 32 385 | 43.2 | .6 666 | 123.5 | 11.68 | 3 778 | 92 | 100 | 77 | 77 | 96 | 92 | 101 | 85 | 87 | 107 |
| Röd mellanmorot. . | 26 765 | 44.8 | .4 818 | 77.7 | 13.05 | 3 484 | 76 | 94 | 80 | 79 | — | 85 | 101 | 91 | 92 | — |

Gul jätte (yellow giant) in 1914 yielded the best results, both as regards the total weight and the quantity of dry matter; good results were likewise obtained with the two varieties of hvit jätte (white giant).

All the varieties kept very well under storage. The loss of dry matter from the autumn to the middle of March ranges from $^1/_8$ to $^1/_7$, and the percentage of roots spoiling is always very low.

985 - **Gum-yielding Plants of Brazil.** — MONTANDON HEITOR, in *Chacaras e Quintaes*, VIIth Year, Vol. XIII, No. 6, pp. 417-421. San Paulo, June 15, 1916.

RUBBER, GUM AND RESIN PLANTS

Brazil possesses various indigenous plants which can supply a substitute for gum arabic, obtained, by incision, from several species of *Acacia*. Such are: 1) the different species known as "angico"; "angico" proper is *Enterolobium elliptcum* (*Pithecolobium gummiferum*), occurring very widely

in the States of San Paulo, Minas Geraes, Bahia and in the vicinity of Goyaz and Pernambuco; 2) " arvore da gomma " or " gomma lagrima " (*Vochisia gummifera*), is very common in the province of Rio de Janeiro; 3) the " vinheiro do campo " or " arvore do vinho " (*Vochisia thyrsoidea*) common in the State of Minas Geraes.

The best quality " gomma lagrima " (*i. e.* without impurities) is perfectly colourless and transparent; it dissolves completely in 11 parts of cold water and then furnishes a gum which is likewise colourless and transparent. Its specific gravity is 1.604 at 26.25° C. On analysis the following results were obtained :

*Composition of Brazil " Gomma lagrima ".*

| | | | |
|---|---|---|---|
| Water | 117.99 ‰ | Resinous substance | 0.43 ‰ |
| Arabine | 876.74 | Insoluble matter | 0.12 |
| Yellow bitter substance | 0.31 | Ash | 4.40 |

According to experiments conducted in 1884 by Prof. J. J. PIZARRO at the University of Rio de Janeiro, the gum of *Vochisia thyrsoidea* has an adhesive power 10 times greater than that of gum arabic. With respect to its medicinal properties, it is also fully able to bear comparison with the latter.

From 1900 onwards some consignments of Brazil gum were exported to Liverpool and to Germany, where they were greatly appreciated both on account of their good quality and their low prices.

STIMULANT, AROMATIC, NARCOTIC AND MEDICINAL CROPS

986 – **Tobacco-Growing in Portugal.** — SONTO MAIOR J., in *Boletim da Associação central da Agricultura portuguesa*. Year XVIII, Vol. XVIII, No. 2, pp. 53-58, 1 fig. Lisbon, February 1916.

Tobacco-growing was introduced in Portugal in 1884, with the object of mitigating the crisis produced in the region of Douro by the phylloxera invasion. It was at first allowed by way of experiment for a period of 3 years, but subsequently the concession was constantly renewed. By decree of 1907 the State tobacco monopoly was granted by public sale to the " Companhia dos Tabacos " which was compelled to pay over to the State 65 % of its profits and to buy from the Douro growers the whole of their product up to 20 % of the total consumption. The growers deliver the tobacco in the form of strung leaves dried to 25 % of moisture. The Tobacco Company pays for it at its market value, which for ordinary unspoilt tobacco is mostly 18 centavos (4 ¼ *d.*) per lb. Furthermore by decree of the 2nd February 1891 a premium of 10 *centavos* (2 ½ *d.*) was granted for every pound of tobacco delivered in good condition. The average production per acre is 8 922 to 12 490 lb. of dry leaves. Home-grown Portuguese tobacco is used for manufacturing cheap cigars. In comparison with other European tobaccos it is of mediocre quality.

During the thirty years for which tobacco has been cultivated in Portugal the plant has hybridised naturally, has subsequently undergone selection and has become fixed in the type best adapted to the climatic and soil

conditions. Although the growers played no part in all these operations, Portuguese tobacco is to-day, according to the writer, in such a position that its intrinsic quality is incapable of further improvement ; on the other hand, the methods of cultivation might be much improved.

987 – **Cultivation and Selection of *Vitis rotundifolia* and *V. Munsoniana* (Muscadine Grapes) in the United States.** — HUSMANN GEORGE C. and DEARING CHARLES, in *U. S. Department of Agriculture, Farmer's Bulletin* 709, 28 pp., 29 fig. Washington, D. C., April 1st, 1916. VINE GROWING

The vines called " Muscadine " in the United States are native and thrive (under suitable conditions of soil and climate) throughout the seaboard plain in the South-east of the Union, from James River to Florida, as far as the Blue Ridge mountains, and from Florida along the coast of the Gulf up to Texas ; towards the north along the Mississippi up to South-east Missouri and the river Tennessee. In this zone about 25 million acres at least (of which a large part at present is uncultivated) are perfectly adapted for the growing of these vines. For some time now the " Muscadine " vines have been more widely cultivated than all other stocks over a large part of this territory, but it is only during the last 10 years that their production has attained to any real commercial importance. Of the two species which bear the name of " Muscadine " the more important is *Vitis rotundifolia*. It comprises the most widely grown stocks (Scuppermong, Mish, James, Flowers, Thomas, and Eden), and is indigenous in the whole of the above mentioned zone. *V. munsoniana* is if anything one of its subtropical varieties, and is native to Florida, the coast zone, the Gulf of Mexico and perhaps to the region adjoining the south-eastern coast of Georgia. *V. rotundifolia* has small bunches made up of big grapes with big stones. *V. munsoniana* has comparatively large bunches with small grapes and small stones. Furthermore, it tends to produce continually, and in August it bears buds, flowers and fruits in all stages of development.

The " Muscadine " stocks are reproduced by seed or are multiplied by slips or layers. The last method is most in use. Grafting which does not give very good results, is rarely resorted to. The most commonly grown varieties have practically a sterile pollen, although their flowers are hermaphrodite. Cross pollenation with vines having exclusively male flowers is therefore necessary. Such is the case with 75 % of the wild vines. It has been clearly established that these vines are entomophilous. Formerly wild vines grew in sufficient number to guarantee annual cross-pollenation. At present the number is much less, therefore the vineyards have to be planted with them to the extent of one to 8 or 10 fertile vines. It would be highly desirable to place bee-hives in the middle of big vineyards. While, under natural conditions, from 7 to 10 % of the buds of " Muscadine " stocks produce grape bunches, if they are carefully pollenated the proportion producing them is from 20 to 30 %.

As the average production for 4 year old stocks from 1200 to 1430 lbs of grape per acre may be reckoned ; for 5 year old stocks from 2410 to 3570 lbs per acre ; for stocks in full bearing from 4550 to 7226 lbs.

About $^3/_5$ of Muscadine grape are used for wine-making, especially

the fruit of the varieties the grapes of which fall when ripe, and which are gathered by spreading cloths beneath the stocks, or shaking the latter, and afterwards separating the grapes from the impurities (leaves, branch débris, etc.), by means of a fan. These grapes fetch on the avrage from $^3/_4$ *d.* to 1 *d.* per lb. On the other hand, the varieties from which the ripe grapes do not drop are cropped by gathering the grapes; their fruits are sometimes eaten as table grapes and fetch a slightly higher price than those above referred to, but they cannot stand lengthy transport. Excellent jellies, jams and syrups, etc., are made with " Muscadine " grapes.

The United States Department of Agriculture is at present engaged in experimental selection of Muscadine stocks with the object of producing varieties possessing: 1) better adhesion of the grape to the bunch; 2) larger size of the bunch ; 3) a higher sugar content ; 4) less acidity ; 5) a better pulp ; 6) smaller and fewer stones ; 7) a finer skin ; 8) uniform ripening ; 9) self-fertilisation. A large number of excellent seed plants and several much esteemed varieties have already been obtained. A group of 49 nurseries has been established, where 50 % of the plants show perfect flowering and self-pollenation, and where there is not even a single sterile male plant. Hence the belief that the complete realisation of the objects in view is a question of time has become a conviction. Furthermore, a number of highly promising hybrids have been obtained between the Muscadine stocks and the American *Euvitis*, and between the Muscadines and the *Vinifera*.

The Muscadine stocks are remarkably exempt from diseases and insect pests. The most serious disease is " blackrot " (*Guignardia Bidwellii*) which, in unfavourable years, attacks the flower buds and the leaves, but to a far less serious extent than in the case of *Euvitis*. Control measures consist in spraying with Bordeaux mixture.

Among insect pests, mention must be made of the grapevine flea beetle (*Haltica chalybea*) and an unidentified coleopteron (snout beetle) ; the damage hitherto caused by them, however, is insignificant.

FORESTRY

988 – **Relations between Forest Valuation and Management.** — Frey P., in *Zeitschrift für Forst- und Jagdwesen*, No. 12, Berlin, 1915.

Adherents of the theory of the net produce of the soil base their calculations of forest value on the determination of " expectation values " as regards such forest stands as the forest is capable of producing. In drawing conclusions from their results they take as their basis the " expectation value of the soil " resulting from the yields stated in money which in theory a soil devoted to forest cultivation is capable of furnishing after deducting the expenses of cultivation. They classify as being theoretically most advantageous to the forest owner that method of working which allows of reckoning on the highest sum as the " expectation value of the soil ". Although they recommend that a low rate of interest be adopted, they leave it to the free discretion of the forest owner to choose the rate, which is the factor influencing in the greatest degree the result of the computations.

The great disadvantage presented by this method is that the most advantageous mode of working does not coincide with the maximum amount

found for the " expectation value of the soil ". As valuation of the forest and management should correspond in their results, the writer recommends the abandonment of the theory of " expectation values " in favour of another method of calculation.

On the method here advocated only the present exchange values (common values) of the plants have any influence on the result, and the method is termed " method of the exchange values ". It gives much more reliable results, although the values are only approximate and depend on the laws of supply and demand.

The value of the soil on which the stands grow does not in any way form a standard of guidance as regards the most judicious mode of working, and consequently cannot be taken into account in this question. The value of the initial material alone plays a decisive part in the installation of the forest management, because it is the fluctuations in this material which give rise to those in the annual growth of the stand. Tabulation of the annual increment (tables of return) is the best basis on which to decide as to the method of working to adopt. These results may serve as a reliable basis with a view to the management of the forest.

The science of forest management should furnish guidance as to the course to be pursued in determining the initial material, and the average annual growth. According to the writer, the determination of the value of the standing timber and growth should not be effected by measurement, it being sufficient to calculate these values by the aid of properly compiled tables. When the average figure representing the total annual growth of workable wood, and also of secondary material and underwood, has been determined by means of the tables of yield, and it has been ascertained that this total growth can be utilised uninterruptedly without diminution in the initial material, the task of practical management of the forest is solved. The writer already demonstrated in 1888 and 1889, by means of an example of average annual yield expressed in money, that the determination of this value is practicable. It need hardly be said that the same mathematical demonstration may be effected where yields by volume are in question instead of money yields.

The utilisation of the tables of yield by volume allows, by simple calculation, of determining the necessary bases for the management of the forest. First there are calculated the total annual yields of workable wood as well as secondary material and underwood then the material required for the durable working of these annual yields, and finally the economic age.

If the period of rotation to be selected is designated by $x$, and if $Zx$ denotes the total annual growth per acre of workable wood, secondary material and underwood corresponding to such period, and $Mx$ the normal material of workable forest and underwood per acre, the equation $Mx = \frac{Zx \times x}{2}$ is obtained. All the oldest plants in a class of management for which the period $x$ must be maintained, must be deemed workable in view of the fact that their felling yield exceeds the minimum amount ; all the youngest

stands, the felling yield of which remains below the minimum amount, must on the contrary be regarded as not yet workable. Consequently, all the youngest stands will be entered in account not at their ordinary felling yield, but in the form of a product obtained by multiplying the total annual growth of workable material by their respective ages.

If the forest owner expects from his forest not only as high and valuable as possible a yield of standing bulk, but also a maximum financial yield, it is sufficient if management, instead of being based on the tables for yield by volume, is based on tables of money return.

## LIVE STOCK AND BREEDING.

BREEDING

989 – **The Detection of the Prepotency of Sires.** — Hover J. M., in *The Journal of Heredity*, Vol. VII, No. 4, pp. 173-178. Washington, D. C., April, 1916.

The superiority of a parent or a breed in determining the characters of its offspring is termed "*prepotency*". This character only occurs in very few animals of each breed, and was studied by the writer in the Guernsey cattle in the United States, making use of the herd-book instituted for this breed by the American Guernsey Cattle Club.

Sires having the power of producing improved offspring are generally detected by an examination of the progeny, sometimes a long time after the death or slaughter of the sires themselves.

In order to determine the character of improvement exhibited by a sire, the number of his progeny admitted to registration in the herd-book may be taken as a criterion. The writer rejects this method on various grounds, especially in the case of the American Guernsey breed, owing to the facility with which an animal may be registered, the conditions of admission not being sufficiently stringent (all that is required is the production of 360 lb of butter-fat for a full grown cow, while the average production is 312.771). He likewise rejects the method which consists in comparing the daughters of different sires with their respective dams and noting the amount of improvement. He therefore takes as the criterion of the prepotency of a bull the number of the latter's daughters which produce a very high yield of fat, or, in the case of the Guernsey breed, 600 lbs per year at the time of full growth, and he furthermore introduces the idea of the "equivalent of 600 pounds", that is to say of the young cow, which according to its present production, will probably yield 600 pounds at the age of 5.

In December 1915 there were only 32 bulls which had sired 3 or more daughters with a production equivalent to 600 pounds of fat. This number is very low, representing only 0.092 % of the males registered in the herd-book of the American Guernsey breed. The writer therefore concludes that prepotency is very rare, being found in only 1 per 1000 of the Guernsey breed of bulls.

The writer next studied the ancestry of these 32 bulls which clearly exhibited a prepotent character; he found that with the exception of 3 they all belonged to 7 families, which therefore clearly presented a prepotency.

Each family had sprung from an ancestor which had transmitted its prepotency to a number of its descendants. He further concludes that the character in question is probably increased by in-breeding, although some American prepotent sires are the result of crosses between members of different prepotent families.

990 – **A Sex-limited Colour in Ayrshire Cattle.** — WENTWORTH EDWARD N., in *Journal of Agricultural Research*, Vol. VI, No. 4, pp. 141-147. Washington, D. C., April 24, 1916.

In the Ayrshire breed the coat is generally red and white, nevertheless in the United States animals of black piebald colour have been observed from time to time (1). Up to the present day, no attention has been paid to the mode of transmission of this coat, because in America it was considered as being undesirable and it was sought to eliminate it by selection. It is difficult to ascertain whether the black is due to a true black pigment, or whether it is simply a very intense red. Under the microscope, typically black granules appear to be present, but no attempt has yet been made to obtain a chemical solution of the pigments.

The writer, for his studies, had recourse to the pedigree (ancestors and descendants) of the Ayrshire bull of the scientific Agricultural Station of Kansas, with white and very dark mahogany red coat (called above black piebald). 63 individuals were taken into account altogether. After classification and discussion of the results, the following conclusions are arrived at:

1) The black piebald colour is a simple allelomorph of the red piebald colour in Ayrshire cattle.

2) In the males, the black piebald character is dominant ; in the females the red piebald character is dominant.

3) Males heterozygous in respect to the two characters have black piebald coat, while heterozygous females have red piebald coat.

Appended is a bibliography of 4 works.

991 – **Encouragement of the Breeding of Small Livestock and Bee Keeping by the Prussian State Railway Administration.** — BADERMANN, in *Deutsche Landwirtschaftliche Tierzucht*, 20th Year, No. 20, pp. 159-160. Hanover, May 19, 1916.

STOCK RAISING: ORGANISATION AND ENCOURAGEMENT

In 1906 it was proposed in the Prussian Diet to place a sum at the disposal of the State Railway Administration for distribution to minor officials and workmen already possessing hives or desiring to obtain them. In 1907 the proposal was carried into effect and the Railway Administration was also recommended to make provision for bee-keeping when planting trees and hedges on slopes and to arouse the interest of workmen and employees in bee-keeping by means of lectures and the distribution of suitable publications. The Railway Administration was furthermore authorised to give financial and moral encouragement to the purchasing of lives, and it facilitated attendance to lectures and bee-keeping exhibitions by workmen and employees.

(1) See *B.* 1915, No. 1063. (*Ed.*)

Table I gives particulars of the encouragement granted during the period 1907 1910.

TABLE I.

| Years | Amount of grants | Number of workmen and employees who benefited by these grants | Number of workmen and employees who followed courses of lectures and attended agricultural exhibitions | Number of workmen and employees engaged in bee keeping |
|---|---|---|---|---|
| | £ | | | |
| 1907 . . . . . | 653 | 165 | 208 | 2 343 |
| 1908 . . . . . | 552 | 165 | » | 2 409 |
| 1909 . . . . . | 602 | — | 199 | 2 511 |
| 1910 . . . . . | 637 | — | » | 3 002 |

In order to improve the economic condition of the workmen and minor officials, especially those residing in the country, in view of the success of the experiments previously carried out, the Railway Management was also advised to encourage small-livestock breeding (goats and rabbits) in addition to bee-keeping. With this object, in addition to the measures mentioned above for bee-keeping, the following were proposed : to get the workmen and officials to join the livestock-breeding associations ; to interest labour organisations in these questions ; to subsidise the construction of suitable pens and rabbit-hutches.

Table II furnishes indications as to the encouragement granted in this new period.

The total number of persons engaged in bee-keeping and raising the above livestock is therefore 87 902, a by no means contemptible figure from the point of view of the production of milk, meat and honey during the war. No data are available as to the number of goats and rabbits, or as to the quantity of animal products obtained. The number of hives was 26 846 at the end of 1914.

TABLE II.

| Years | Grants for the purchase of | | | Number of persons receiving grants for | | | Number of workmen who attended lectures | Number of workmen breeding | | |
|---|---|---|---|---|---|---|---|---|---|---|
| | bees | goats | rabbits | bees | goats | rabbits | | bees | goats | rabbits |
| | £ | £ | £ | | | | | | | |
| 1911 . . . | — | £815 | | — | 432 | | 1 292 | 3 674 | 42 179 | |
| 1912 . . . | 10 31 | 12 34 | 13 07 | 500 | 488 | 1 500 | — | — | — | — |
| 1913 . . . | 14 28 | 17 53 | 12 54 | 565 | 628 | 1 809 | — | 4 960 | 30 654 | 35 350 |
| 1914 . . . | 10 86 | 16 29 | 15 80 | 505 | 1 225 | 2 093 | — | 5 367 | 31 879 | 50 656 |

The figures for the year 1915 are not yet known.

To sum up, the total subsidies allowed from 1907 to 1914 amount to £6834 for bee-keeping ; £5140 for goat breeding and £4172 for rabbit breeding.

992 – **The Adaptation of Different Breeds to the Livestock Industry in the United States.** — WENTWORTH E. N., in *The Field*, Vol. XXVI, No. 6, p. 501-503, 542, 544, 546. New York, June 1916.

The adaptation of a breed of livestock to different agricultural conditions depends inversely on its degree of specialisation with a view to a given purpose. The result of this is a restriction of adaptation which practically determines the distribution of the different breeds. Those breeds which are most perfectly specialised predominate in specific localities, while those which have least deviated from the original conditions of non-specialisation are the most widely distributed throughout the agricultural regions of the globe.

*Cattle.* — The Shorthorn breed has been the principal source for the improvement of beef cattle. Cattle intended for dairy production in New England and Longhorn cattle in Texas received their first impetus by the inheritance of the characters of this pioneer in cattle improvement. In the blue-grass region the descendants of the Durhams have found the best environment, and the Shorthorn breed has since then become and remained the principal breed in the corn belt and the one preferred by farmers.

In the West and South-West of the United States, the first impulse towards the replacement of livestock of mixed breed and Mexican livestock likewise arose through the introduction of the Shorthorn ; the development of the meat industry in Argentina is closely linked up with the spread of the Shorthorn; and so is that of Australasia, in the proportion of at least 60-80 %. The high degree of adaptation of this breed has resulted in its forming, so to speak, the vanguard which prepares the way for the introduction of other more highly specialised breeds. This is what took place in the corn belt, where the value of the lands requires the quickest possible growth and early maturity.

The Aberdeen-Angus, with its splendid body, its early maturity and economy in feeding, enabled a fresh margin of profit to be secured ; nevertheless, the Shorthorn still retains its popularity, as is proved by data showing distribution, which are largely in its favour. The Aberdeen-Angus furthermore proves that it possesses in the highest degree the quality of a show animal in competitions with a view to obtaining very high-class products at shows and exhibitions. At the last international exhibitions, ten live champions and fourteen killed champions belonging to this wonderful breed gave fresh its proof of its superiority.

In those belts where forage production is unlimited, but where there is little grain growing, the Hereford breed has gained the upper hand over the Shorthorn, and has been substituted for the latter in the prairies of the West.

In the pasturage belt of the North and the cold region of Alaska, the Galloway breed has demonstrated its great powers of resistance and its

superiority over all the other selected races in surmounting unfavourable environmental conditions.

Among other breeds, the Polled Durham and Polled Hereford proved their efficacy in the improvement of ordinary cattle by the rapidity with which shortening of the horn is produced by crossing; the Red Poll breed has also asserted itself as a good dairy animal with good fattening qualities, as is proved by the carcasses of this breed shown at exhibitions, and it has thus established its right to exist as a dual-purpose breed. Other breeds like the Devon, have not yet received that final sanction of practice which enables them to be regarded definitively as excellent.

Naturally, the dairy breeds, in order to stand their ground, have had to compete with the Shorthorns and Devons imported by the first colonists; consequently the progress of dairy breeds generally has, with the exception of some rivalry between the Holstein-Friesians and the Jerseys, been confined to the undertaking, almost in co-operative form, of the conquest of the lands occupied by the red, white and roan cattle. The very fact, however, of the varied distribution of the races establishes differences between them as regards their adaptation and intrinsic value, which differences are not always admitted by their partisans. The privileged position gained by the Holstein-Friesian breed in the belts surrounding big towns is a testimony to its great production of milk for sale, just as the fact of wide distribution of the Jersey breed in the South tends to prove its greater resistance to the hot climate. The persistance of many able farmers in maintaining the Jersey breed on certain model farms establishes the quality of its products and its ability for economical production under the most intensive working conditions.

The merits of the Ayrshire and Guernsey breeds are comparatively less popular in the United States. The Guernsey breed, in the belt where it is favoured, has already stood the test as a rival of the Holstein-Friesian, and also as a competitor with the Jersey in the capacity of a breed capable of economically yielding a product of superior quality. The Guernsey breed to a certain extent possesses the general characters of the Shorthorn breed for butcher's cattle, and no doubt it would have formed the intermediate link in specialisation if the demand for a highly specialised breed had not arisen too rapidly for the Guernsey to gain a footing. The Ayrshire breed, on the other hand, possessed the advantage of its nationality during the early periods of Canadian colonisation, when many Scottish colonists settled there, and had gained a footing in the rather cold regions of the New England hills for the production of milk in a somewhat greater quantity than that of the Jersey and Guernsey breeds, the quality being almost equal.

Finally, each breed possesses its clearly recognised advantages. The Holstein-Friesian, as a good producer of milk and fat, has gained noteworthy success in the hands of the ordinary farmer specialising in milk production. Its special ability to consume large quantities of bulky foods, which allows of a considerable reduction in the consumption of concentrates, and its qualifications for giving good results in rearing calves intended for meat

production, render it essentially the dairy cow for the farmer at the head of a non-specialised farm.

The qualities of the Jersey breed are well known. The characteristics are the richness of the milk in fat, economy of production and beauty of type, which render it the favorite breed for competitions and shows. Owing to this it was not long in becoming the favourite breed on big farms, and it has thoroughly stood its ground after a trial of three quarters of a century. At shows and at tests of fat yield it has maintained its position as first in rank among the dairy breeds, so that in the public mind the name of the Jersey breed is associated with the idea of every improvement in milk production.

The Ayrshire breed owes its favour to like qualities. Being the hardiest among the dairy breeds, and also exhibiting lines of great beauty, it has become the dominant breed on the Pacific Coast owing to the uniformity of its products. Its constant breeding true to type, as well as the quantity and quality of the milk throughout its offspring, form its principal merit. Probably it possesses in a latent form the necessary qualities for further specialisation, but hitherto this race has not been subjected as systematically as the others to comparative tests with a view to accurate determination and increase of its productive qualities.

The specific quality of the Guernsey breed as a market milk producer is shown by the fine yellow colour of the milk, this colour being highly appreciated by consumers. The breed, however, possesses other and far superior qualities. Its milk production, as compared with the Jersey breed, is also higher, and the fat content of the milk is likewise greater than for the Ayrshires and the Holstein-Friesians. It is gaining ground annually with a large number of milk producers, above all those in charge of non-specialised farms.

*Horses.* — As regards horses, events in the United States have been somewhat similar to what has occurred with cattle. The American trotter, after attempt to increase of speed over a century, continues to be selected outside the breeding of the American farm horse. To-day the original races only exist for the production of mares intended to be crossed with heavy draught stallions. The breeding of the American thoroughbred trotter is of importance henceforward to sporting circles, and that of the light draught horse has to-day disappeared from the most advanced agricultural regions, giving place to the heavy draught farm horse.

The Percheron was the first to introduce on a large scale the proportions of the heavy draught horse among American farm horses. It was particularly adapted for that task, owing to the comparative lightness of its skeleton, its vigorous blood, and its marked qualities for increase of weight. It occupied, in America at least, the same place in respect to horses as the Shorthorn breed did for cattle. Its principal merit consists in having given weight to its descendants and thus complied with the general demand of farmers.

A striking contrast with this development is afforded by the more specialised labouring horses, such as the Clydesdale, Shire and Belgian breeds. The Clydesdale breed was imported practically at the same time as the Per-

cheron, and has stood the test in all attempts at breeding specialised races, without however succeeding in imposing its type on the farm horse, because it is a type too specialised in the direction of the heavy draught horse, and the first breeders, who were unable to discern the requirements of intensive feeding in the foals of this breed, had some failures, because the Clydesdale was produced for a single purpose only, and it should either be a heavy draught horse or not exist. The Shire race also had similar failures at the outset.

Nevertheless, when breeders had mastered the breeding methods enabling the desired type to be secured with certainty, utilising the experience gained with the Percheron, they decided to repeat the trial with the Clydesdale, the Shire and the Belgian horses, with ultimate success. The Belgian horse was the last to breed out, and in fact has only done so during the last five years, when, from the point of view of export, it gained such importance as to play a part in horse-breeding in America, but its rapid spread in the corn belt and the enthusiasm with which it was received there render it clear that the only limit to its further spread lies in the number of available sires.

As regards the individual qualities of these breeds, the Shire undoubtedly possesses the maximum pulling energy per individual, while the Clydesdale is more perfect in its outlines and action, endowed with longer life and less subject to disease; the Belgian offers a special resistance to continuous daily work, though it is not so active as its English rivals; the Percheron finally is the best adapted for crossing with the American working horse.

*Pigs.* — An evolution similar to that undergone by cattle and horse breeding is also observable in pig breeding. The Berkshire played the part of the Shorthorn. In Canada and the Middle Atlantic States it is the pre-eminent meat producer. Along the Pacific coast and in South and Eastern America it represents almost exclusively the improved breed imported from the West. In New England it rivals the Chester White in popularity, while in the corn belt it is run close by the Poland China and the Duroc Jersey.

These last two breeds form the dominant element in the region which specialises in pig-breeding. The Poland China was not slow in establishing its claims owing to its early maturity, fattening qualities and possibility of profit on an economic basis. It had a close rival in the shape of the Duroc Jersey, which is superior to it in fertility, adaptation to pasturage and general hardiness. The two breeds have made progress partly owing to the absolute contrast between them, and tendencies to obtain the extreme forms of each type, which extreme forms are termed "hot bloods" and "cold bloods". From the point of view of adaptation, the Chester White was able to spread to advantage in some regions of the United States, and the principal quality of the Hampshire breed as regards meat production may in the future secure this race a greater popularity. The Yorkshire and Tamworth breeds, which are good for bacon production, are more rarely met with, and the localities where they have adapted themselves are less frequent, their merit being nevertheless genuine and easily observed in

the districts of Ontario, Quebec and New York, as also in Michigan and Minnesota.

*Sheep.* — In sheep breeding, the Shropshire and Hampshire breeds are the most widely found, being appreciated both on small farms, ranches and extensive sheep pastures. The former breed is valuable for its fleece, the latter for its weight. The Oxford requires more abundant pasturage; the South Down is the classic meat producer; the spread of this latter breed is also due to its size and its splendid fattening powers; there are very few breeds which can dispute its supremacy as a show animal, or for the butcher. The Dorset breed has gained favour with some breeders, chiefly owing to its capacity to produce lambs during the winter period, and its good milk production.

The fine wool breeds, Rambouillet and Delaine Merinos, have had to give way to meat breeds in the agricultural region where land is dear; on the great prairies, however, they still form the basis of big flocks, owing to the value of their wool and their remarkable herding instinct. The Lincoln and Cotswold are still very much in demand for the purpose of crossing with the two above breeds, owing to their great size and to their precocity and abundant wool production. The Leicester and Cheviot breeds are limited to the northern climate and find particularly favourable conditions in Ontario.

The factors limiting the spread of the Cheviot breed are its size and its undeveloped herding instinct. Nevertheless, after the South Down, this race possesses the best type of carcass, but the possibilities of its extension through the region of the Apalache mountains, and the other mountainous parts have not been developed.

993 - **Horse Breeding in Minnesota.** — *The Breeder's Gazette*, Vol. LXIX, No. 25 p. 1294. Chicago, June 22, 1916. HORSES

A " Report of the Horse Breeding Industry in Minnesota " issued by the " Minnesota Stallion Registration Board ", University Farm, St. Paul, Minn., shows that 2056 purebred and 1896 grade stallions were licensed to stand in Minnesota this year. This is an increase of 54,7 per cent. of purebred stallions and a decrease of 14.3 per cent. of grades in the last 6 years. Of the 2056 licensed stallions, 1244 are Percherons, 326 Belgians, 126 French Draft, 93 Clydesdale, 52 Shires, 4 Suffolk, 142 Standardbreds, 23 Morgans, 21 German Coach, 11 French Coach, 5 Hackneys, 4 Shetlands and 2 American Saddlers. The stallion registration board tends to encourage horse development in the State in every possible way. Special horse breeders' meetings are held at various points in the State, judges are furnished for many local colt shows, speakers are sent to meetings of farmers' clubs and short courses, and farmers are assisted in the selection of good sires. Special attention is given to considering inquiries pertaining to the feeding, breeding and management of horses.

The stallion registration law is vigorously enforced by the board; the 25 cases prosecuted in 1915 for violation of the law were all decided in favour of the State, with fines of $ 25 to $ 100.

CATTLE

994 – **Statistical Data as to increased Weight and Food Consumption of the Jersey and Holstein-Friesian Breeds from irth to Bfirst Calving.** — HAYDEN C. C., in *Ohio Agricultural Experiment Station, Bulletin* 289, pp. 1-30. Wooster, Ohio, August 1916.

The Ohio Experimental Station has published the result of its researches into the daily increase of the Jersey and Holstein-Friesian breeds from birth to calving. The data were collected at the experimental farm, and comprise up to now: 69 series of individual daily observations up to one year, 51 series up to two years, and 37 series up to the first calving. In addition to the increase of weight, there was also noted day by day the quantity of food consumed and the cost of this food, as well as the total cost of rearing, allowing for the other expenses incurred.

We sum up in the following table the average data in reference hereto:

| Breed | Average weight at birth lbs. | Average weight at 1 year lbs. | Average weight at 2 years lbs. | Average weight at 1st calving (26-27 months) lbs. | Average daily increase in 1st year lbs. | Average daily increase in 2nd year lbs. |
|---|---|---|---|---|---|---|
| Jersey . . . . . | 56 | 472 | 758 | 780 | 1.1 | 0.8 |
| Holstein-Friesian. . . | 82 | 564 | 962 | 1 076 | 1.3 | 1.0 |

*Food consumption during the first year and costs of rearing.*

| Breed | Milk | | Cereals (grain) | Silage | Hay | Maize stalks | Pasturage | Cost of feeding | Other expenses | Total cost |
|---|---|---|---|---|---|---|---|---|---|---|
| | Full cream lbs. | Skim lbs. | lbs. | lbs. | lbs. | kg | days | | | |
| 40 Jersey . | 465 | 2 968 | 597 | 458 | 709 | 40 | 122 | $ 27.75 | $ 14.79 | $ 42.54 |
| 29 Holstein | 449 | 2 786 | 656 | 580 | 760 | 29 | 128 | $ 29.31 | $ 14.79 | $ 44.10 |
| *Consumption of food during the second year and costs of rearing.* | | | | | | | | | | |
| 19 Jersey . | | 87 | 785 | 2 426 | 1 038 | 254 | 159 | $ 27.12 | $ 8.89 | $ 36.01 |
| 22 Holstein | | 174 | 870 | 2 247 | 1 419 | 232 | 151 | $ 29.55 | $ 8.89 | $ 38.44 |
| *Consumption of food and costs of rearing from birth to 1st calving (26-27 months).* | | | | | | | | | | |
| 24 Jersey . | 469 | 3 005 | 1 349 | 2 870 | 1 805 | 291 | 272 | $ 54.51 | $ 23.68 | $ 78.19 |
| 13 Holstein | 445 | 2 835 | 1 517 | 2 903 | 2 215 | 243 | 272 | $ 58.12 | $ 23.68 | $ 81.80 |

An examination of the individual series discloses the fact, which is important for practical purposes, that calves born in autumn may be reared to the age of one year at a cost below that of calves born in the spring. The

reason is that when spring comes the former are already able to utilise pasturage to the full for the whole of its duration, while for those born in the spring the period of pasturage coincides largely with the suckling period, and the winter period with that of growth, during which the consumption of forage and concentrates reaches its maximum.

The quantity of food consumed corresponds to rations capable of providing the complete normal growth of each individual, and is such that it may be considered that any economy made in this respect would have impeded normal growth, and that an increase of the ration would probably have given rise to an increase of growth in the animal, but at such a cost that its adoption would not be justified.

995 – **Progress of the Holstein Breed in the United States.** — *The Breeder's Gazette*, Vol. LXIX, No. 24, p. 1257. Chicago, June 24, 1916.

The Annual Meeting of the Holstein-Friesian Association of America, which was held on the 7th June at Detroit, Mich., was attended by 2 683 out of the total number of 8 885 members of this association. During the last financial year there has been an addition of 1 260 life members.

The Herd-Book of the Holstein-Friesian Society of America already dates back 45 years and records the presence in the United States of more than 300 000 pure-blooded Holstein-Friesian animals distributed among 30 000 owners. A new census of them will be carried out during the next year.

During the last working year 72 665 animals were entered in the Herd-Book, and the registration of 68 766 transcriptions owing to change of ownership was made.

In the Advanced Registry there appears as tested during the last association year 12 882 cows producing an average of 408 lbs. of milk and 14.40 lbs of butter fat in 7 days, with a maximum of 35.53 lbs of fat for Ormsby Jane Segis Aggie, and of 1205.09 lbs. of fat in one year for Duchess Skylark Ormsby (world's record).

The minimum individual production henceforward required for the championship is as follows : for mature cows, 44.42 lbs butter in 7 days and 1 506 lbs in a year; for two-year-old cows, 31.4 lbs in 7 days and 1 200 lbs per year.

The meeting adopted resolutions in favour of the association providing for the creation of a body of inspectors under its control, instead of relying upon those of the State Colleges and experiment Stations.

The distribution of prize money absorbed a sum of more than $ 15 000 ; advertising expenses exceeded $ 25 000.

Furthermore, the meeting approved a resolution in reference to the introduction in the Herd-Book of the 305 days' test, according to the rules in force for the 365 day's test, but independently of this latter. This period was sufficient to test the continuance in milk, and the advantage was thus secured of making annual calving possible even in animals subjected every year to a production test.

The annual meeting will in the future be held alternately east and west of the 18th degree of longitude, and in 1917 at Worcester.

996 – **The Portuguese Cattle Breeds Barrosa and Maronesa.** — De Lacerda Pizarro Agostinho José Freire, in *Revista de Medicina Veterinaria*, 15th Year, No. 173, pp. 129-134, Lisbon, July 1916.

The Barrosa breed (in the Barros region) belongs to the district of the Minho and part of that of Oporto ; the Maronesa race is a native of the district of the Douro.

According to the writer the Barrosa breed in its present state shows cranial characters similar to those of *Bos mauritanicus*, and has very fully developed and large horns.

From a comparison between the two breeds the Barrosa breed exhibits the following features : wider head, horns twice the size and pointed directly upwards from their root ; the vertex of the frontal protuberance nearer to the median line ; shorter face ; smaller size of naso-maxillary suture ; the presence of a frontal crest, more prominent orbits. The head is dished in both breeds. The line of the upper edge of the neck, especially in its front part, is concave in the Barrosa and almost straight in the Maronesa. The dorso-lumbar line and the tail insertion are identical ; the Barrosa breed has straight or slightly hollowed buttocks, the Maronesa straight or slightly convex ones. The limbs of the Barrosa are finer, as its skeleton is more slender ; its meat yield may amount to 65 % of the live weight, which is never reached by the Maronesa. The Barrosa breed has less capacity for resisting heavy labour ; it is much more suitable for dairy purposes (cows are found which when in full milk yield from 2.6 to 3.1 galls of milk per day, with 5 to 6 % of fat). According to the measurements made by the writer, the Barrosa breed presents the following average dimensions :

| | |
|---|---|
| Length of head | 15.74 ins. |
| Width of fore-head | 11.42 ins. |
| Height of withers | 51.18 ins. |
| Coxoscapular length | 60.63 ins. |
| Circumference of chest | 80.73 ins. |
| Height of chest | 31.71 ins. |
| Width of ribs | 18.11 ins. |
| Maximum width of belly | 84.64 ins. |
| Initial width of pelvis | 16.03 ins. |
| Dactylothoracic index | $^1/_{10}$ to $^1/_{10.8}$ lbs. |
| Live weight | 15.40 to 21.56 lbs. |

Therefore this is a breed with dished face, short lines and eumetric (according to Sanson, brachycephalic).

The writer holds that the " Barrosãos " cattle form a true race, but that on the other hand the " Maronesos " are the result of a cross between the Barrosa and Mirandesa breeds. He is led to this conclusion both from

observation of the animals and from the fact observed by him that the product of crossing these two races actually presents the characters exhibited by the Maronesos.

997 – **Experiments in Pig-Feeding carried out by the Experimental Sub-Station of North Platte, Nebraska, United States.** — SNYDER W. P. and BURNETT E. A., in *Bulletin No. 147 of the Agricultural Experiment Station of Nebraska*, Vol. XXVII, Art. IV, 50 pp. (Limited Edition) ; 31 pp. (Popular Edition). Lincoln, Nebraska, 1915. PIGS

Report on experiments in pig rearing in 1912, 1913 and 1914. To allow of comparing these results with those already set out in the previous bulletins of the same Station, there were adopted (in all cases where not otherwise indicated) the same unit prices as in previous years, namely :

TABLE I.

| | |
|---|---|
| Pigs per 100 lbs. | $5.00 |
| Maize per bushel | 0.47 |
| Wheat " " | 0.70 |
| Barley " " | 0.40 |
| Rye " " | 0.50 |
| Oil meal per ton | 30.00 |
| Butcher's offal per ton | 40.00 |
| Shorts per ton | 24.00 |
| Lucerne hay meal per ton | 15.00 |
| Chopped lucerne hay per ton | 10.00 |
| Lucerne hay per ton | 8.00 |

*Wintering old brood Sows.* — It was desired to make a comparison between a ration of chopped lucerne hay mixed with an equal weight of ground grain, and of feeding the lucerne hay in a rack (*ad libitum*) and shelled maize in a trough. Each ration was given to 10 sows from the beginning of November to March (average 121 days) in four consecutive years. It is proved by the average of the four years that 9.9 bushels of maize and 86 lbs of lucerne hay, or 8.84 bushels of maize and 495 lbs of chopped lucerne hay were required to maintain a sow weighing 387 lbs during 4 winter months and to increase its live weight by about 95 lbs. The feeding of a light grain ration and of lucerne hay *ad libitum* was found to be more economical than the feed with which it has been compared.

*Wintering young brood Sows.* — During 5 consecutive winters gilts were given *ad libitum* a mixture of 1 part by weight of chopped lucerne hay with 2 or 3 parts of grain. The proportion of grain was reduced when the sows looked like becoming over-fleshy. Each group comprised 20 to 25 sows. The experiments began about the 10th November and ended about the end of March or beginning of April, a little before littering. There was found on the average :

TABLE II. — *Wintering cost of young Sows with farrow.*

| | |
|---|---|
| Weight of sows at the beginning of experiment | 178 lbs |
| " " " at the end " " | 300.3 lbs |
| Average daily increase per head | 0.91 lbs |
| Cost of feeding to produce 100 lbs of gain in weight | $5.30 |

To produce 100 lbs of gain, 477 lbs of grain and 181 lbs of alfalfa were required.

The net wintering cost of a young sow was less than that of an old sow, because the former shows a more rapid increase of live weight.

*Cost of feeding the porkling from birth until the time when it reached the weight of 50 pounds.* — A comparison was made between porklings born of 18 old sows and others born of 24 young sows. The particulars of Table III are the average of a period of 4 years for the former and 5 years for the latter. The porklings were debited with the cost of feeding of the sows from autumn to the time when they weighed 50 lbs (end of the experiment), plus the cost of feeding the porklings from weaning until the end of the experiment. The difference between this total and the value of the increase of live weight of the sows during the period of experiment forms the cost of production of the porkling weighing 50 lbs.

TABLE III. — *Average Cost of Porklings weighing 50 lbs.*

| | Born of old sows | Born of young sows |
|---|---|---|
| Increase in live weight of sows during period of experiment | 62 lbs | 101.4 lbs |
| Cost of feeding sows and porklings | $17.41 | $16.41 |
| Number of young born at each litter | 11.1 | 8.2 |
| Weight of young at birth | 2.4 lbs | 2.31 lbs |
| Number of porklings which lived to the end of the experiments | 6.55 | 6.2 |
| Age at which the weight of 50 lbs was attained | 89 days | 99 days |
| Cost of food consumed for the production of this weight | $2.11 | $1.68 |

*Comparison between the cost of production of the autumn-born porkling and the spring-born porkling.* — For 4 years a comparison was made between 579 spring pigs born from old sows, 543 spring pig from young sows, and 153 autumn pigs from young sows. Their average costs of production (from the moment immediately preceding littering until the time when the porklings reached the weight of 50 lbs.) were $2.05, $1.81 and $2.03 respectively. As compared with the old sows and their porklings, the young sows consumed less grain. They reared nearly as many young, and the latter increased in live weight with an almost equal rapidity.

TABLE IV. — *Comparison between the cost of pigs from old sows and those from young sows.*

| | From old sows | From young sows |
|---|---|---|
| From autumn to the time when the porklings weighed 50 lbs . . | $2.11 | $1.08 |
| From immediately before birth until the above time . . . . . | $2.01 | $1.81 |

The young sows produce the porklings at a cheaper cost, above all because, being less in bulk, they require a smaller maintenance ration, and they and their young convert a larger proportion of the food into increase in live weight.

*Cost of rearing pigs on lucerne pasturage supplemented by a grain ration, during the summer.* — The observations bore on 1 345 pigs divided into 50 groups. The results show that the rate of increase of live weight is closely connected with the quantity of grain consumed, and that the cost of the increase of live weight rises with the rate of such increase. The lucerne pasture is cheap and the grain ration is expensive. The increase in live weight is cheap or dear according as it is produced principally by the former or the latter means. A ration of less than 2 lbs of grain per day per 100 lbs of live weight may produce pigs poor in growth. The average of the results is set out in Table V.

TABLE V. — *Rearing pigs with lucerne pasturage and grain.*

| Daily ration of grain per 100 lbs. of live weight | Daily increase of live weight per head | Quantity of grain consumed to produce 100 lbs. increase in live weight |
|---|---|---|
| 2 lbs | 0.56 lbs | 260 lbs |
| 2.5 | 0.73 lbs | 312 lbs |
| 3 | 0.90 lbs | 389 lbs |

*Shorts for pigs kept during summer on lucerne pasturage.* — A supplementary ration of maize alone (grain) is compared with another ration made up of $^3/_4$ maize and $^1/_4$ shorts, and yet another ration made up of half maize and half shorts. In the first case, the ration of maize alone produces somewhat more rapid increases of live weight at a slightly less cost ; in the second case, rather better results were obtained with the ration of maize and shorts, but the difference was always small. It is not desirable to replace maize by shorts if the latter costs no less than the former.

*Dry or soaked maize for lucerne-pastured pigs.* — Soaking the maize grains does not give any advantage.

*Food consumed during summer by boars.* — A ration of 2.5 lbs of grain per day was fed per 100 lbs of live weight to lucerne-pastured boars. They consumed 339 lbs of grain per 100 lbs increase of live weight. The increase of live weight per head per day was 0.92 lbs. ; at the end of the autumn the pigs weighed on the average 171 pounds each.

*Maize and supplementary feeds for pig fattening.* — From the 14th November 1911 to the 27th February 1912, the rations 1 to 10 of Table VI were again distributed in the following winter and ration 11 was also tested. Lucerne hay was given ad libitum.

TABLE VI. — *Maize (corn) and additional foods for pig-fattening*

| Group | Ration |
|---|---|
| 1 | Shelled corn (1911-1912) or shelled and crushed corn (1912-1913) |
| 2 | Ear Corn and lucerne hay |
| 3 | Ground corn and lucerne |
| 4 | Ground corn and lucerne hay |
| 5 | Ground corn 90 parts and lucerne meal 10 parts |
| 6 | Ground corn 90 parts and shorts 10 parts |
| 7 | Ground corn 90 parts and of oil meal (extracted by solvents) 10 parts |
| 8 | Ground corn 95 parts and butcher's offal 5 parts |
| 9 | Ground corn 90 parts, oil cake 10 parts, and lucerne hay |
| 10 | Grouud corn 95 parts, butcher's offal 5 parts, and lucerne hay |
| 11 | Ground corn 90 parts and cotton seed cake (extracted by cold compression) 10 parts |

*Results.*

| Group | Average increase of live weight per head per day | | Weight of food consumed to produce 100 lbs increase of live weight | | Cost of production of 100 lbs increase of live weight | | Profit per pig | |
|---|---|---|---|---|---|---|---|---|
| | 1911-1912 | 1912-1913 | 1911-1912 | 1912-1913 | 1911-1912 | 1912-1913 | 1911-1912 | 1912 1913 |
| 1 | 0.78 | 1.22 | 610lbs | 494lbs | 5.13 $ | 4.19 $ | 0.64 $ | 2.34 $ |
| 2 | 0.79 | 1.52 | 586 | 424 | 4.80 | 3.50 | 0.92 | 3.99 |
| 3 | 0.78 | 1.52 | 603 | 446 | 4.93 | 3.36 | 0.80 | 3.78 |
| 4 | 0.90 | 1.33 | 597 | 482 | 4.93 | 3.93 | 0.93 | 2.86 |
| 5 | 1.00 | 1.24 | 536 | 497 | 4.45 | 4.13 | 1.53 | 2.41 |
| 6 | 1.05 | 1.34 | 511 | 461 | 4.47 | 4.04 | 1.59 | 2.72 |
| 7 | 1.24 | 1.41 | 467 | 445 | 4.23 | 4.03 | 2.20 | 2.88 |
| 8 | 1.25 | 1.46 | 469 | 441 | 4.21 | 3.96 | 2.25 | 3.08 |
| 9 | 1.26 | 1.41 | 487 | 455 | 4.29 | 4.08 | 2.13 | 2.81 |
| 10 | 1.26 | 1.47 | 484 | 447 | 4.14 | 4.00 | 2.35 | 3.04 |
| 11 | — | 1.48 | — | 454 | — | 4.00 | — | 3.07 |

*Corn and lucerne compared with corn, shorts, and lucerne in rearing and fattening pigs.* — The experiments comprised the periods: 1) from 5th September to 14th November 1911; the pigs, of an average weight of 112 112 lbs in the 1st group, and 115 lbs in the 2nd, were put out to lucerne pasturage, and were given: the 1st, 3.34 lbs of ground maize per 100 lbs live weight per day; the 2nd, 3.30 lbs of a mixture of $^2/_3$ corn and $^1/_3$ shorts per 100 lbs live weight per day. The pigs of the 1st group increased in live weight by 0.05 lbs more per head daily than those of the 2nd group, and consumed 10 lbs less grain per 100 lbs gain in live weight. 2) From 14th November to 2nd January, the pigs were kept in the sties; they were given as much lucerne hay as they wanted and 2.48 lbs of maize per 100 lbs for the 1st group. To the 2nd group 2.60 lbs of corn + shorts per 100 lbs were given; they increased 0.06 lbs more per head daily than the 1st group, and consumed 2 lbs of grain more per 100 lbs increase of live weight. In the two experiments together the two additional rations produced the same daily increase of live weight, and 16 lbs more of corn plus shorts were required (as compared with corn alone) to produce 100 lbs increase of live weight. At the prices contained in Table I, the profit obtained per head with the additional corn ration alone was almost double that obtained with the additional ration of corn + shorts.

TABLE VII. — *Wheat and rye compared with maize for fattening pigs with or without lucerne hay.*

| Ration | Average daily increase of live weight per head | Foods consumed to produce 100 lbs. increase of live weight | Cost of 100 lbs. increase of live weight | | Profit per pig | |
|---|---|---|---|---|---|---|
| | | | (1) | (2) | (1) | (2) |
| | lbs. | lbs. | $ | $ | $ | $ |
| Dry Shelled corn . . . . . | 1.11 | 479 | 3.97 | 5.47 | 2.11 | 2.49 |
| Dry whole wheat . . . . . | 1.02 | 519 | 5.99 | 5.98 | )oss | 1.91 |
| Soaked » » . . . . . | 1.05 | 514 | 5.92 | 5.92 | loss | 1.80 |
| Moistened ground wheat. . . | 1.30 | 433 | 5.00 | 4.99 | 1.21 | 3.70 |
| Soaked » » . . . | 1.41 | 418 | 4.84 | 4.84 | 1.46 | 4.02 |
| Moistened whole rye . . . . | 0.88 | 558 | 6.51 | 5.50 | 0.34 | 1.97 |

(1) Prices takew at Corn 47*c*, Wheat 70*c* and Rye 50*c* per bushel. Hogs $5.90 per 100 lbs. — (2) Prices taken at Corn 65*c*, Wheat 70*c*, and Rye 50*c*, per bushel, Hogs $7.75 per 100 lbs.

*Addition of lucerne and residue of lucerne tea to a ration for wintering of castrated young pigs.* — The following comparisons were made: 1) lu-

cerne hay *ad libitum* + ration of 3 parts of corn and 1 of shorts reduced to a thick slop : *a*) with hot water ; *b*) with an infusion of lucerne hay ; 2) to the above basal ration there were added : *a*) infusion residue, *i. e.* lucerne hay stewed for an hour in hot water, and then drained ; *b*) the same quantity of chopped dry hay ; 3) *a*) ration of 90 parts of ground maize 10 parts of chopped lucerne hay mixed and reduced to a paste with boiling water ; *b*) the same quantity of corn and the same quantity of infused chopped lucerne hay (solid and liquid parts).

In the first two experiments the use of the lucerne infusion and the infusion residue proved of advantage ; in the third, it was only slightly so. To sum up, this operation cannot be advised in those cases where it would be very expensive.

TABLE VIII. — *Comparison between corn and: corn + shorts; corn + barley; corn + Triticum dicoccum ; corn + wheat ; corn + butcher's offal. — Average of all the results.*

| | Corn | Corn + shorts | Corn | Corn + barley | Corn | Corn + *T. dicoccum* | Corn | Corn + wheat | Corn | Corn + butcher's offal |
|---|---|---|---|---|---|---|---|---|---|---|
| Number of experiments made | 10 | 10 | 8 | 8 | 3 | 3 | 4 | 4 | 7 | 7 |
| Number of pigs experimented on . . . . . | 168 | 168 | 132 | 132 | 84 | 84 | 64 | 64 | 162 | 162 |
| Daily increase of live weight per head . . . . . lbs. | .94 | .94 | 1.19 | 1.10 | 1.33 | 1.14 | 1.30 | 1.22 | 1.17 | 1.45 |
| Weight of food required to obtain of 100 lbs increase of live weight . . . . . lbs. | 436 | 433 | 478 | 532 | 477 | 529 | 501 | 470 | 511 | 459 |
| Cost of 100 lbs gain of . $ | 3.36 | 4.07 | 4.04 | 4.48 | 3.95 | 4.48 | 4.01 | 4.53 | 4.26 | 4.08 |
| Profit per pig . . . . . $ | 1.70 | 1.34 | 1.78 | 1.26 | 1.95 | 1.38 | 2.33 | 1.71 | 1.83 | 2.45 |

998 - **Specific Effects of Different Rations on the Growth of Pigs ; Experiments at the Ohio Agricultural Experiment Station, United States.** — FORBES E. B., BEEGLE F. M., FRITZ C. M., MORGAN L. E. and RHUE S. N., in *Bulletin of the Ohio Agricultural Experiment Station*, No. 283, pp. 111-152, fig. Woster, Ohio, 1915.

Experiments in feeding followed by slaughter and analysis of the carcasses, carried out in pigs, in order to study the specific effect of rations

on the composition of the resulting increase of live weight. The rations are indicated in Table I.

TABLE I. — *Rations tried.*

1) Corn (maize) alone.
2) Corn and soya beans) in the ratio 10.82 : 1.
3) Corn and linseed oil meal (extracted with solvents) in the ratio of 0.36 : 1.
4) Corn and wheat middlings, in the ratio 2.81 : 1.
5) Corn and slaughter-house offal, in the ratio 18.84 : 1.
6) Maize and skim milk, in the ratio 0.882 : 1.
7) Control (killed at the beginning of the experiment).

These rations were fed so as to contain the same quantity of digestible matter per unit of live weight of the pigs. The feeds supplementing the corn were added in such quantities that the different rations had the same ratio between protein and starch value as the non-nitrogenous substances. Consequently this experiment served to a great extent for comparing the growing powers of pigs when they consume equivalent quantities of protein in different forms. For this purpose 35 pigs, all pure-bred Duroc-Jerseys, were used, divided into 7 groups of 5.

It was found that the capacity to produce increase of proteins is greater for the digestible protein of milk than for the digestible protein of the vegetable foods tried and slaughter-house offal.

The maize with supplementary ration of: soya, linseed oil meal, sharps, wheat middlings, slaughter-house offal, and skim milk, in such proportions that the nutritive value of the rations was 1 : 6.5, does not furnish mineral substances corresponding to what is required for the maximum growth of the bones, either as regards the nature or quantity of these substances.

Rations of corn alone, and corn + soya, produce the minimum in point of bone growth. Rations of corn + slaughter-house offal and corn + skim milk produce the maximum in this respect. Rations of grain alone do not produce a normal formation of bone.

Among all the groups chosen for the experiment, that which was given the corn and linseed oil meal gave the maximum percentage of meat and subcutaneous and peritoneal fat (on the whole), and the minimum percentage of bone, as compared with the entire skeleton completely stripped of meat.

The groups to which slaughter-house offal or skim milk was given had the maximum proportions of bone as compared with the entire meatless skeleton, with the exception of the groups to which corn alone or corn + soya was given, in which the larger proportion relatively to the skeleton was due not to a greater development of the bones, but to the inferior nutrition of the other tissues.

The proportions of lime, magnesia and phosphorus in the bone shows a great tendency to remain constant, but they may be modified within certain limits by the limitations applied in the feeding. Nevertheless, the absolute *quantities* of these elements in the bones are capable of a far greater modification as a result of the composition of the feed given.

The percentage of ash and the breaking strength of the bones varied on the following decreasing order: 1) maize+skim milk; 2) maize+slaughter-house offal; 3) maize+linseed oil meal; 4) maize; 5) maize+wheat middlings; 6) maize+soya brans. They are set out, in the order of groups, in Table II.

In all the groups except those which had received slaughter-house offal or milk, the bones contained less lime and phosphorus than in the control group (killed at the start of the experiment). The skeletons of the pigs which had wheat middlings (a food very rich in magnesia) contained more magnesia than those of the control group.

The ration of corn alone produced less moisture, protein and ash, and more fat in the meat, than all the other rations of corn+supplementary food. At the opposite end of the series is the ration of corn+skim milk, which produced the maximum moisture and protein and the minimum of fat in the meat.

TABLE II. — *Percentage of ash and breaking strength of bones.*

| | Percentage of ash in the bones | | Breaking Streugth | |
|---|---|---|---|---|
| | natural state | freed from water | of the femur | of the tibia |
| 1 | 24.1790 % | 41.3811 % | 198.17 kg | 208.65 kg |
| 2 | 23.8160 | 38.6059 | 191.01 | 189.15 |
| 3 | 20.5020 | 32.9561 | 157.58 | 157.08 |
| 4 | 20.3940 | 33.2637 | 154.67 | 149.73 |
| 5 | 19.0330 | 34.9358 | 150.86 | 144.24 |
| 6 | 19.2560 | 32.5435 | 141.52 | 133.72 |

There is a great variation, which appears to be caused by feeding, in the quantity of the mineral constituents of the meat and blood.

Half of each carcass was salted and treated for preservation. It was observed that the foods had produced great differences in the compactness of the loins and sides, and some effect on their behaviour during cooking, together with a slight effect on the good quality of the meat when cooked.

A complete analysis of one half of each carcass was made. The results obtained show the existence of a specific effect on the proportions of the principal parts forming the tissues. The results are shown in Table III.

Complete histological analyses of the blood of each pig were made. Certain individual differences were referred to the condition of nutrition of the animals forming part of one and the same experimental group.

Other observations were considered as being specific or characteristic of the group and the ration.

The quantity of catalase contained in the most important organs and tissues was estimated, and certain differences were noted between the results given by the different groups subjected to the experiment.

One of the most important facts resulting from this study and others previously carried out at the same Station (Bulletin 271) relates to the use of lime in agriculture. It is rendered obvious that cereals are very poor in lime regarded as an element of the food of animals, as it has been clearly proved that the normal growth of the skeleton cannot be produced by grain. This calls special attention to bulky leguminous forages; as they contain a great deal of protein and a proportion of lime which no other forage

TABLE III. — *Effects of the ration on the principal constituent parts of the tissues.*

| Ration | Ratios between protein and fats in the meat (ether extract) | Ratios between protein and ash in the bone | Ratio between protein, fats and ash in the carcass |
|---|---|---|---|
| 1 | 1 : 6.66 | 1 : 1.130 | 1 : 5.12 : 0.178 |
| 2 | 1 : 5.65 | 1 : 0.957 | 1 : 4.45 : 0.170 |
| 3 | 1 : 6.30 | 1 : 1.139 | 1 : 4.95 : 0.169 |
| 4 | 1 : 5.87 | 1 : 0.928 | 1 : 4.43 : 0.159 |
| 5 | 1 : 6.34 | 1 : 1.171 | 1 : 4.88 : 0.197 |
| 6 | 1 : 5.03 | 1 : 1.171 | 1 : 3.93 : 0.179 |
| 7 | 1 : 4.52 | 1 : 1.076 | 1 : 3.36 : 0.199 |

furnishes, they form the ideal natural supplementary food to be used with grain. The growth of *Leguminosae* depending on conditions resulting from the presence of calcium compounds in the soil and these plants taking large quantities of that element from the soil, the normal growth of animals stands in a natural relation to the fundamental question of the use of calcium compounds in agriculture.

999 – **Wheat as a Food for Fattening Pigs; Experiments in Missouri, United States** (1). — WEAVER L. A., in *University of Missouri, College of Agriculture, Agricultural Experiment Station, Bulletin* 136, 35 pp., 8 fig. Columbia, Miss., 1915.

In 1913 the wheat crop was very plentiful and the maize crop very poor in the State of Missouri, so that the price obtainable by the farmer for the former was less than the purchase price of the latter. The Agricultural Experiment Station of Missouri received many enquiries from farmers con-

(1) See also *B.* May 1915, No. 540. (*Ed.*)

cerning the comparative value of wheat and maize as a food in the fattening of pigs, and the best method of feeding wheat to them.

In 1914, the continuous rains at the end of the summer and beginning of the autumn damaged a large part of the wheat harvested in the State of Missouri, and reduced its value to such an extent as to make its use as a pig food economically desirable.

The experiments included numerous and variously combined feeding tests, accompanied by the slaughter of standard animals belonging to each of the group experiments. The purpose of these experiments was: 1) to compare the food value of maize and wheat; 2) to obtain particulars as to the food value of wheat fed alone or together with other foods rich in carbohydrates; 3) to obtain data as to the food value of wheat along with foods rich in protein and mineral substances.

The results are contained in 30 tables and are summed up as follows:

In this experiments pigs fed on wheat increased in weight more rapidly than those fed with maize.

During the entire feeding period of 120 days the wheat-fed pigs showed an average daily gain of 1.25 lbs per head as against 1.00 lbs for those fed on maize.

To produce 100 lbs increase of live weight there was required 483 lbs of wheat as against 582 lbs of maize in the like conditions.

A mixture of wheat and maize in equal parts appeared to be more suitable in point of rapidity and economy of increase of live weight than maize alone, but less than wheat alone.

A ration of maize 10 parts and butcher's offal one part produced more rapid increase of weight than maize alone.

During the 120 days of the feeding period, the ration consisting of 10 parts of maize + 1 part of butcher's offal produced an increase of live weight of 1.27 lbs per head per day, as against 1 lb with the maize ration alone.

To produce 100 lbs increase of live weight a lesser quantity of grain was needed when the maize was supplemented by butcher's offal. In this experiment, 498 lbs of a ration consisting of 10 parts of maize and 1 part of butcher's offal produced the same increase of live weight as 582 lbs of maize alone under like conditions.

The addition of butcher's offal to the wheat ration showed a clear advantage during the first part of the feed test.

During the first 78 days of the experiment, the ration 10 parts of wheat + one of butcher's offal gave an average increase of live weight of 1.55 lbs per day, while the ration of wheat alone produced 1.25 lbs. During that period, in order to produce 100 lbs increase of live weight, there were required 424 lbs of the ration wheat+butcher's offal as against 455 lbs of wheat ration alone.

During the last 42 days of the experiment, the pigs fed on wheat and butcher's offal also showed a more rapid increase of live weight, namely, 1.53 lbs per head per day as against 1.26 lbs with wheat alone. This surplus in the increase of live weight was not very, or rather not at all, economic. During this period, to produce 100 lbs increase of live weight there were re-

quired 543 lbs of the ration of wheat alone, or 562 lbs of the ration wheat + butcher's offal.

A ration of wheat 10 parts, butcher's offal one part produced more rapid increase of live weight than a ration of wheat 5 parts, maize 5 parts and butcher's offal 1 part, or a ration of maize 10 parts, butcher's offal 1 part. Furthermore, the increase of live weight was more economical. In a similar way, the ration 5 parts of wheat, 5 of maize and 1 of butcher's offal was more effective than the ration 10 parts of maize and 1 of butcher's offal.

469 lbs of the ration wheat + butcher's offal produced 100 lbs increase of live weight at the rate of 1.52 lbs per head per day. 458 lbs of the ration wheat + maize + butcher's offal were needed to produce 100 lbs increase of live weight at the rate of 1.44 lbs per head per day. Finally, 498 lbs of the ration maize butcher's offal were needed to produce 100 lbs of live weight at the rate of 1.27 lbs per head per day.

1000 – **Egg-laying Competition in Australia.** — I. HART A., Results of the 5th Egg-laying Competition held in the State of Victoria, Australia, in 1915-1916 (1), in *The Journal of the Department of Agriculture of Victoria*, Vol. XIV, Part 6, pp. 329-340, 8 fig. Melbourne, June 1916. — II. THOMPSON D. S., Results of the 4th Egg-laying Competition held at the Grafton Experiment Farm, New South Wales, in *The Agricultural Gazette of New South Wales*, Vol. XXVII, Part 6, pp. 433-437. Sydney, June 1916. POULTRY

I. — One year competition (April 1915-April 1916) held at the Burnley School of Horticulture, in which 570 hens took part, in groups of 6, divided into 3 sections : 1) light breeds, wet fed (56 groups) ; 2) light breeds, dry fed (19 groups) ; 3) heavy breeds, wet fed (20 groups). The wet fed hens were, in the morning, given a mash consisting of crushed oats, sharps, pea meal, oat shorts and chopped liver ; at noon, the same mash mixed with lucerne and chopped beetroots ; in the evening, a mixture of grain. The dry fed hens received a ration consisting of about the same constituents, but simply mixed together and not reduced to a mash. The difference between the groups subjected to the two forms of feeding was slight, and far less than in the preceding year. This proves that dry feeding, provided it is properly constituted and well balanced, is quite as suitable as wet feeding, and that the selection of the feeding should therefore be according to the conditions of the locality.

The total number of eggs laid during the year by the 570 hens (20 died before the end of the competition and were not replaced) was 125 119, of which 75 900, or about 226 per hen, were furnished by the 336 hens of the 1st section. The 114 hens of the 2nd section laid 25 164 eggs, or an average of 200.7 per hen.

The 120 heavy breed hens of the 3rd section laid 24 055 egs, or an average of 200.5 per hen.

The light breeds were exclusively represented by the White Leghorn ; the heavy breeds by the Black Orpington, Rhode Island Red, Faverolle, Silver Wyandotte, White Wyandotte, and White Orpington.

(1) See also : *B.* 1915, No. 945. (*Ed.*)

The 3 best groups in each section gave the results indicated in Table I.

TABLE I. — *Results given by the 3 best groups in each section.*

| Breed | Total number of eggs laid | Average weight of a dozen eggs |
|---|---|---|
| *1st Section.* | | |
| White Leghorn | 1 661 | 694 gr. |
| Do. | 1 637 | 661 |
| Do. | 1 623 | 678 |
| *2nd Section.* | | |
| White Leghorn | 1 638 | 666 gr. |
| Do. | 1 601 | 646 |
| Do. | 1 457 | 708 |
| *3rd Section.* | | |
| Black Orpington | 1 507 | 725 |
| Do. | 1 447 | 686 |
| Rhode Island Red | 1 423 | 700 |

The maximum productions obtained up to the present in Australia in Government controlled competitions are those indicated by Table II (number of eggs laid in one year by a group of 6 hens).

TABLE II. — *Maximum production obtained hitherto in controlled competitions in Australia.*

| State | Breed | Number of eggs |
|---|---|---|
| South Australia | White Leghorn | 1 589 |
| West Australia | Do. | 1 564 |
| New South Wales | Do. | 1 541 |
| Queensland | Do. | 1 564 |
| Victoria | Do. | 1 699 |
| New Zealand | Do. | 1 632 |
| Victoria | Black Orpington | 1 562 |

This last competition also brings out clearly the rapid and continual improvement of the White Leghorn as a laying breed in the State of Victoria. The winning group of the Dookie College competition in 1904-1905 laid 1313 eggs in 1 year; in the last competition, the winning group laid 1 661, and the first 5 groups laid 8 160, or an average of 272 eggs per hen.

II. In the 1 year competition ended on the 31st March 1916 there took part : *a*) 19 groups of 6 hens in their 1st laying year ; *b*) 22 groups of hens in their 2nd laying year which had already competed in the previous year. The breeds represented were : White Leghorn, Brown Leghorn, Black Orpington and Silver Wyandotte.

The year was remarkable for an exceptional drought, and the green food had to be reduced. The hens were given in the morning a hash of sharps, bran and flour with a little salt ; in the evening a mixture of wheat and maize ; liver once a week ; crushed shells to any amount ; and often epsomite (natural magnesium sulphate) dissolved in water.

The results were not so good as those of the preceding year. The general average obtained was 168 eggs per hen against 182 in the preceding year. The 1st two groups of hens respectively produced during the 1st productive year 1265 eggs, weighing 680 grms per dozen, and 1227 eggs weighing 708 grms per dozen. During the 2nd year of production, the 1st 2 groups of hens respectively have 2144 eggs weighing 680 grms per dozen, and 2055 eggs with the same average weight. In Table II a comparison has been made of the results of the last 3 competitions, indicating the average number of eggs per hen in the different months.

TABLE III — *The Results of three Egg-laying Competitions held at the Grafton Experiment Farm. — Average number of Eggs laid per month.*

| | 1913-1914 | 1914-1915 | 1915 1916 |
|---|---|---|---|
| April | 6.9 | 9.9 | 8.2 |
| May | 14.3 | 15.8 | 7.1 |
| June | 11.0 | 10.4 | 10.2 |
| July | 16.4 | 15.8 | 13.8 |
| August | 21.3 | 20.8 | 16.2 |
| September | 21.3 | 21.0 | 18.1 |
| October | 21.3 | 21.7 | 21.9 |
| November | 19.2 | 20.7 | 16.9 |
| December | 17.2 | 16.9 | 15.6 |
| January | 17.0 | 11.2 | 18.3 |
| February | 13.2 | 10.7 | 13.6 |
| March | 10.6 | 6.6 | 8.2 |

1001 - **Experiments in Breeding different Races of Silkworms, at the Silkworm Station of Puerto de Santa Maria (Seville, Spain).** — *Boletín de Información de la Estación sericícola*, IVth year, No. 6, p. 3. Puerto de Santa Maria, June 30, 1916. SERICULTURE

The Table appended sums up the principal results of these experiments.

*Results of Experiments.*

| Races bred | Weight of cocoons obtained from 1 ounce of eggs: normal | constricted | with poorly developed points | Average weight of a cocoon | Ratio between weight of silk cocoon and that of chrysalis | Proportion of constricted cocoons |
|---|---|---|---|---|---|---|
| Var N° 1 | 78 653 g | 486 g | 1 065 g | 1.976 g | 1 : 5.841 | 0.3 % |
| Var N° 3 | 79 215 | 1 217 | 821 | 2.019 | 1 : 5.838 | 1.5 |
| Var N° 5 | 81 792 | 420 | 1 607 | 2.132 | 1 : 5.809 | 0.5 |
| Var N° 15 | 76 796 | 789 | 1 456 | 1.759 | 1 : 4.761 | 1 |
| Var, acclimatised in Spain | 73 095 | 1 535 | 2 184 | 1.983 | 1 : 5.218 | 2 |
| Ascoli Piceno N° 1 | 80 886 | 415 | 846 | 2.020 | 1 : 4.824 | 0.5 |
| Ascoli Piceno N° 2 | 86 280 | 671 | 1 049 | 2.240 | 1 : 5.415 | 0.75 |
| Ascoli Piceno, acclimatised in Spain | 76 181 | 2 504 | 746 | 1.910 | 1 : 5.758 | 3 |
| Milan | 76 556 | 3 221 | 846 | 2.150 | 1 : 5.520 | 4 |
| Milan, acclimatised in Spain | 69 798 | 3 196 | 2 214 | 2.020 | 1 : 5.350 | 4.25 |
| Perusa | 68 764 | 2 041 | 2 114 | 2.092 | 1 : 6.390 | 2.8 |
| Fuentes Tijola | 62 262 | 651 | 1 914 | 2.040 | 1 : 5.940 | 1 |
| Spanish with black adults | 61 632 | 1 307 | 1 080 | 1.987 | 1 : 6.150 | 3 |
| Campocroce Cross No. 1 | 74 633 | 4 021 | 784 | 1.800 | 1 : 5.880 | 5 |
| Campocroce Cross No. 2 | 74 717 | 1 929 | 382 | 1.750 | 1 : 5.660 | 2.5 |
| Campocroce Cross No. 3 | 71 134 | 1 741 | 3 429 | 1.750 | 1 : 5.330 | 2.23 |

FISH CULTURE.

1002 – **The Migration of Fish of the Genus *Mugil*, in the Lake of Thau** (1). — ROULE LOUIS, in *Comptes-Rendus des Séances de la Société de Biologie*, Vol. LXXIX, No. 11, pp. 522-525. Paris, June 1916.

The complete migration of these fish includes two displacements in inverse directions, one outward, from the lake to the sea, the other inward, from the sea to the lake. The outward migration takes place during the second half of the summer (August and September) ; it is connected with sexual development, the individuals passing out of the briny waters of the lake into sea water being chiefly breeding fish, the genital organs of which are already bulky. Their sexual maturation and spawning takes place at sea. The inward migration occurs during the winter and the first half of spring, its principal movement lying between February and April. The individuals then passing from the sea water to the brackish waters of the lake belong to two categories : one are recently hatched fry from the spawn resulting from previous outward migrations ; the others are immature adults

(1) See also *B.* May 1916, No. 543. (*Ed.*)

which may, from their appearance, be regarded as the breeders in the previous outward migrations, who return to the lake after spawning. The *Mugil* thus present the characteristic migratory type which the writer has termed "thalassotoccic"; they normally live in an environment of brackish or almost fresh water, pass out into the sea water for reproduction, then after spawning return to their normal habitat.

In their outward migration the individuals pass from a less salt into a more salt environment, from an environment with higher to one with lower temperature; the opposite is the case however (or, as regards temperature, at any rate there is equality between the two environments) at the time of the inward migration. Apparently, therefore, the differences in relation to saline character and temperature play no predominating part in the phenomenon of migration, since the displacements take place both in the positive and negative direction in reference to these conditions.

This is no longer found to be the case however with regard to dissolved oxygen. The researches of the writer on the outward migration have shown that the sea water of the coast at that time is always richer in oxygen than the water of the lake. In the same way, at the time of the inward migration the saltish water of the lake is richer in dissolved oxygen than that of the sea. In both cases, the two inverse displacements have the common condition of being directed from a less oxygenated environment towards an environment better provided with dissolved oxygen.

The displacement of the migratory fish in both directions does not take place at haphazard, but is connected with the presence and duration of the currents existing between the sea and the lake. At the time of the outward migration the majority of the migrating fish only go to the sea when the sea water currents flow towards the lake, and they pass up these currents swimming against the stream. In the same way, at the time of the inward migration, the principal displacement towards the lake is effected against the current when the waters of the lake are passing to the sea. The whole thing takes place just as if the migratory fish did not decide to travel and accomplish their migration until after they had been touched by waters dissimilar from those in which they had hitherto been, and as if such migration only consisted in their maintaining themselves in this new environment, passing along it by gradual stages until the place from which it has its origin is reached.

These considerations lead to several conclusions bearing on the migration of fish:

1) The *Mugil* of the lake of Thau exhibit a simplified type of reproductive or genetic migration, as they need only travel a few miles to accomplish spawning. This type, however, is complete; the indications it provides for simplification are therefore of great importance, as accessory circumstances to which otherwise one may be tempted to attach great importance did not here come into operation.

2) This reproductory migration, in its two inverse directions, possesses an external determining cause, due to the direct action of the surrounding medium. In order that it may take place, it is essential that the

alternating currents set up between the sea and the lake should exercise a differential excitation on the individuals who have reached the stage of readiness for migration. This migration therefore clearly bears a character of tropism, as the immediate influence of the environment plays a preponderating part.

3) This tropism is chiefly of a respiratory kind, as the individuals, whatever the direction of their movement, always pass from an environment poorer to one richer in dissolved oxygen. These conclusions are not merely interesting with regard to the special case of the *Mugil*. They also bear on several other migratory fish, the journeys of which are longer and more complex. It may be readily assumed as regards these latter that the cause of the migration consists either in a reproductive instinct which forces the genetic individuals towards an environment necessary for the future development of their spawn, or in an inherited memory which would call these individuals back to the ancestral environment at the time of their reproduction. None of these reasons of a psychic character and hypothetical nature could be pleaded with regard to the *Mugil*, the migrations of which, as has been seen, have for their principal cause a tropism of a respiratory character. The writer, from the previous observations the series of which he is now continuing, holds that this cause is likewise the one governing the spawning migration of the *Salmon*.

The method of biological investigation which seeks to establish the curves of variation of the differential circumstances of environments in problems of this kind, and to follow the variations in these curves in order to determine those which constantly agree with the variable and successive dispositions of the individuals is the only one which can produce reliable results. These results are of two-fold importance, scientifically in respect to the theory of migration, and practically with regard to fish breeding and fisheries, provided that they are based on numerous and repeated observations so as progressively to eliminate with certainty all secondary circumstances of the character of mere coincidence. The writer therefore proposes to continue these researches, and to undertake them on a larger scale, in order to arrive at the most precise possible conclusions as to the determining causes of migration.

## FARM ENGINEERING.

AGRICULTURAL MACHINERY AND IMPLEMENTS

1003 – **Production of Agricultural Machinery in the United States in 1914.** — *Farm Implement News*, Vol. XXXVII, No. 25, p. 15, 1 table. Chicago, June 22, 1916.

The Census Office of the Department of Commerce in the United States has published a preliminary summary of the results of its enquiry into this production in 1914, compared with 1909.

Replies to the list of questions of the Department were sent by 772 works which manufactured agricultural machinery in 1914, to an aggregate value of $168 120 632. In 1909 returns, the corresponding figures had been

854 works and $149 318 544, so that during the last five-year period the value of the annual production increased $18 802 088, or 12.6 %.

The machines which mainly contributed to this increase are enumerated n Table I.

TABLE I. — *Machines with maximum increase of production from 1909.*

| Classes of Machines | Number of machines nade in 1909 | Number of machines nade in 1914 | Percentage increase |
|---|---|---|---|
| Reapers | 136 022 | 215 386 | 58.3 % |
| Spring-tooth harrows | 114 341 | 118 247 | 64.6 |
| Drills | 144 616 | 199 805 | 38.2 |
| Corn (maize) huskers and shredders | 1 298 | 4 338 | 234.2 |
| Maize harvesting machines | 19 819 | 52 087 | 162.8 |
| Bean harvesting machines | 1 650 | 3 605 | 118.5 |
| Cotton sowers | 81 826 | 101 256 | 23.7 |
| Potato planters | 23 142 | 37 276 | 61.4 |

Table II gives a comparison, for 1909 and 1914, of the value of the production of the principal classes of machines and of the total production.

TABLE II. — *Compared value of the production of agricultural machines in 1909 and 1914.*

| | Year 1909 (854 works) | Year 1914 (772 works) | Percentage increase (+) or reduction (—) (— 9 %) |
|---|---|---|---|
| Tilling machines | $ 37 410 595 | 39 632 903 | + 5.9 |
| Planters and sowers | 12 306 207 | 12 268 156 | — 0.3 |
| Harvesting implements | 35 250 840 | 40 561 472 | + 15.1 |
| Machines for separating grains and seeds (threshers, etc.) | 11 588 986 | 13 986 184 | + 20.7 |
| Other machines and spare parts for machines of every description | 46 619 354 | 60 211 327 | + 21.3 |
| Repairs | 3 142 562 | 1 460 500 | — 53.5 |
| Total value of production | $ 149 318 544 | 168 120 632 | + 12.6 |

1004 – **"Nisco" Manure Spreader.** — *The Implement and Machinery Review*, Vol. 42, No. 494, p. 197, 1 fig. London, June 1st, 1916.

In this machine, built by the New Idea Spreader Company Ltd., at Guelph, Canada, the caracteristic part is the spreading mechanism, which lies behind the cart : it consists of a winged-rotating distributor (made of steel), which, in revolving, spreads the manure over a width of about 6

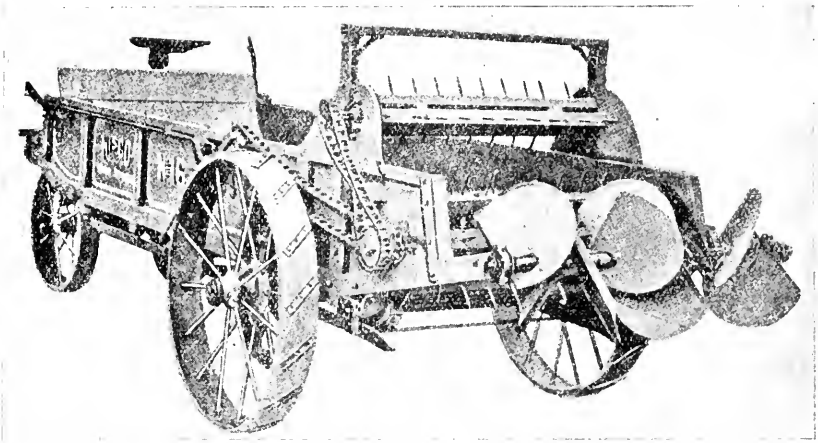

« Nisco » Manure Spreader.

to 7 feet, and also crushes the lumps of manure which might have passed intact between the 2 spiked pulverising cylinders which feed the spreader regularly and uniformly.

These 2 mechanisms are driven by 2 endless chains driven from the rear wheels of the cart.

The machine can be adjusted so as to spread 3 to 18 cart-loads of manure per acre.

1005 – **Fore-carriage for Harvesting Machines.** — KNOBLOCH WILHELM, in *Deutsche Landwirtschaftliche Presse*, 43rd Year, No. 62, pp. 516-517, 2 fig. Berlin, August 2, 1916.

The fore-carriages constructed in agricultural machine workshops are generally complicated and consequently expensive. To provide even the small farmer with the advantages of a good fore-carriage, the writer has designed a simple, practical and inexpensive arrangement of this kind, which can be built by any village smith. Figures 1 and 2 show the fore-carriage in a plan view and longitudinal section respectively.

The axle *a* is a simple square bar of iron (30 × 30 mm), carrying wheels *b*, 1 metre apart ; the wheels of a scarifier may answer the purpose perfectly. In the middle of the axle a hole is bored in which a strong pivot pin *c* (from 20 to 25 mm in diameter) engages, fitted in the middle with a washer 20 mm in height, and locked above by a flat key, and below by a nut.

To the axle there is rigidly connected the shaft *f*, which carries the swing-trees *g* and the cross-member *h*. Instead of the shaft fitted previously to the harvester *l*, there is a U-shaped iron piece 2 m in length, the front part of which is swanneck-shaped while the rear part carries a wood piece 65 cm in length screwed to the U-iron. The curved front part of the iron U-piece carries a flat iron square *i* of 50 × 10 mm riveted to it, and pierced with a 25 to 30 mm hole to take the pivot pin. Further, to the U-iron there is also screwed a solid iron rod *m* 1.3 metres in length, to prevent the rakes from fouling the guides when the vehicle turns.

*Fore-carriage for Harvesting Machines, Knobloch type.*

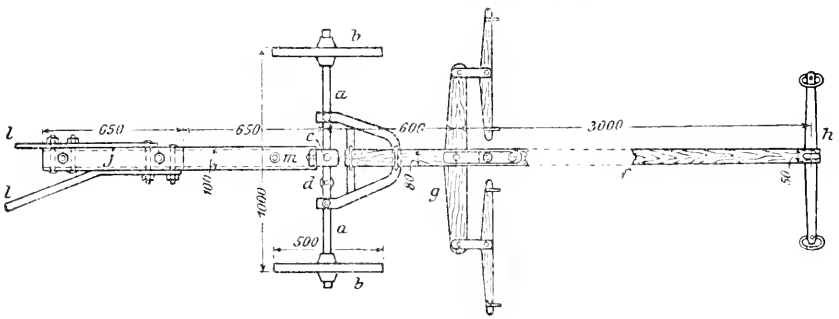


Fig. 1

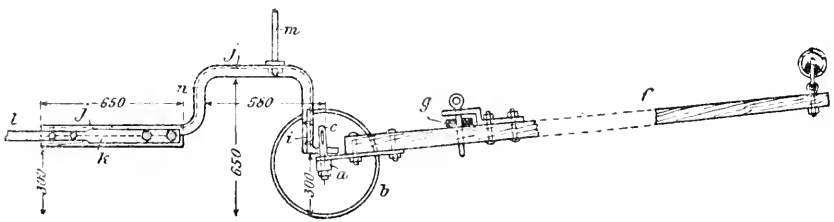


Fig. 2

This fore-carriage may also be used for mowing machines. For this purpose the axle has a second hole *d*, 10 cm from the centre, in which the pivot pin *c* engages.

The shaft being, in the mowing machine, fixed from 10 to 15 cm higher, the rear curve of the swanneck is made from 10 to 15 cm shorter.

With this fore-carriage, turns of 90° may be made both right and left, and the machine may be backed if desired. The fore-carriage can never upset, because the point of attachment *a* lies very low. The front axle is also able to describe an angle of more than 45° horizontal relatively to the rear axle.

1006 – **Apparatus for Extracting the Oil from Oily Substances by means of Non-inflammable Solvents.** — CIAPETTI GINO, in *L'Italia agricola*, 53rd year, No. 7, pp. 298-300, 1 fig. Piacenza, July 15, 1916.

The small open-fire apparatus represented on the appended figure admits the economical extraction of the oil of oily fruits and seeds and their residues (lees and cakes), even on the smallest farms, by means of solvents

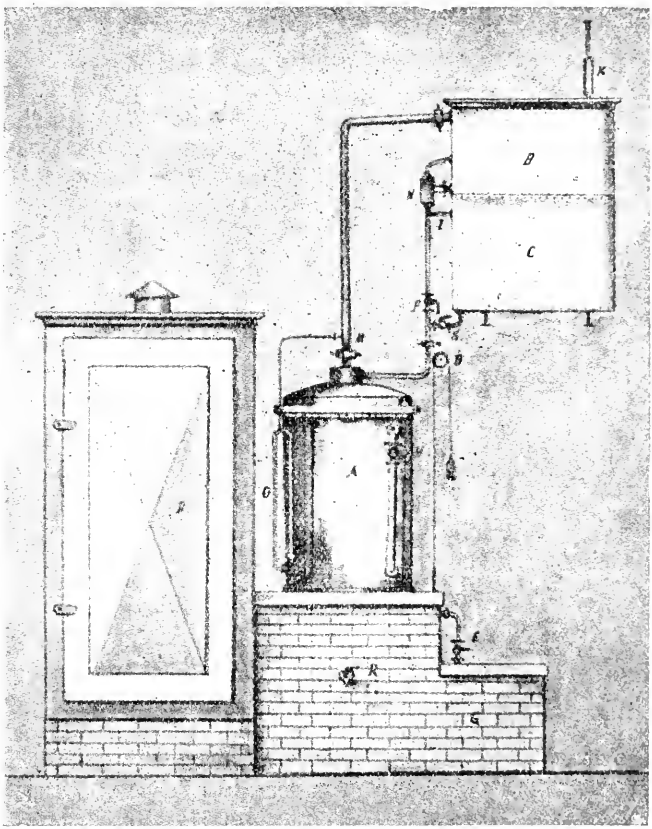


Apparatus for extracting oil from oily substances by the aid of non-inflammable solvents.

which are non-inflammable and non-explosive, and also harmless and pleasant in smell, such as carbon tetrachloride and ethylene trichloride.

These two liquids, insoluble in water, dissolve fats in a larger proportion than benzine and carbon bisulphide, while possessing the advantage over the latter that they require less heat and less water for the process of evaporation and condensation. Although carbon tetrachloride is dearer than carbon bisulphide, it is nevertheless cheaper to use, owing to the fact

that it undergoes far smaller losses during the process of extraction, which, in addition is carried much farther : while carbon bisulphide leaves up to 4.5 % of oil unextracted, with the use of the tetrachloride this loss does not exceed 1.6 %. Finally this solvent very readily gives up the oil extracted (with which it does not form an emulsion as does carbon bisulphide) and, if the seeds or other oily substances to be treated are not deteriorated, an oil as good as if extracted by pressure is obtained.

The essential part of the apparatus in question is an extractor *A* in which a metal gauze basket is suspended containing the oily matters to be subjected to extraction, broken up to allow of easy access to the solvent. The latter circulates from below upwards by means of the leaching-tube *O*, and thus effects the extraction of the oil in the form of a solution which gathers at the bottom of the extractor. The vapour of the solvent, rises through the pipe *H*, and is then conducted through the pipe *M* to *B*, where it condenses in a coil cooled with running water. By using the tap *P*, the condensed solvent may be made to return to the extractor, or through the pipe *I* it way be made to pass into the tank *C*.

When the extraction is completed, the extractor (placed on a furnace) is heated either with an open fire, or in a water bath in the case of delicate oils. In this way the bulk of the solvent is eliminated from the oil solution collected at the bottom, and afterwards, in order to remove the last traces, hot air is injected into the extractor by means of a small force pump. When this is done, the oil can be drained off by opening the tap R.

The waste heat of the furnace is used to heat the drier D, where the broken up oily material is kept for some time before extraction.

The apparatus being airtight the losses of solvent are very small.

To accelerate the work and make it continuous, the apparatus is made with 2 extractors, one of which is in operation while the other discharges and recharges for the next operation.

The appliance is easily managed, and does not require more than 2 workmen.

1007 – **Appliance for Burning Tree Stumps *in situ*.** — *Scientific American*, Vol. CXIV, No. 25, p. 643, 1 fig. New York, June 17, 1916.

This appliance, which is termed a " stump-burner ", being a sort of portable stove for charring and destroying wood, was recently tried with success by a large forest working company in Mississipi (United States).

It is placed on a stump, and the latter subjected to slow combustion until completely charred, during which time the heavy oils (heavy products of dry distillation) are collected. When these operations have been completed on one stump, they are repeated on another, by carrying the apparatus to it, and so forth.

This contrivance is capable of rendering great service on cleared forest land to be brought under cultivation, as it greatly facilitates clearance, which the laborious rooting up of the stumps by ordinary means generally makes so expensive ; it destroys the stumps to a sufficient depth to allow of ploughing without needing to cut roots or carry out any preparatory soil

work. At the same time this process is advantageous from the economic point of view (provided the stumps are thoroughly dry) as it yields products the value of which may entirely cover the costs of extirpation. Thus, an ordinary pine stump gave, in addition to excellent quality charcoal, about 15 gallons of heavy oils.

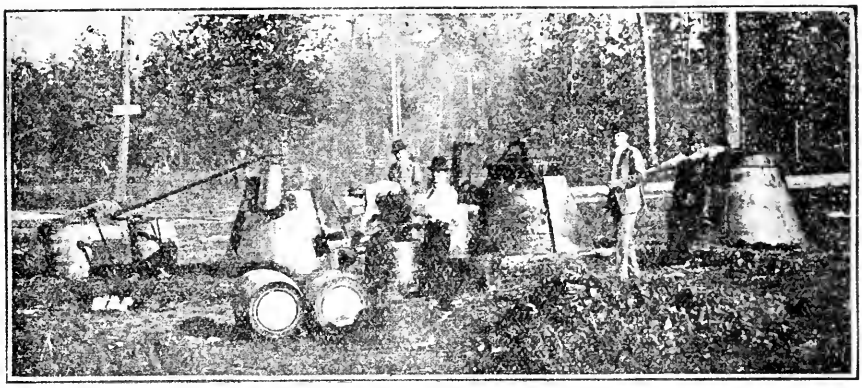

Battery of Tree-stump burners in operation.

## 1008 — Review of Patents.

*Tillage.*

Germany

286 313. Subsoil plough.
286 314. Gripper wheel for motor ploughs.
286 315. Horse hoe.
286 316. Return mechanism for cable-hauled ploughs.
286 317 — 287 810. Arrangement for ploughing, with 1 portable engine, driving by cable 2 ploughs with return mechanism, between which it is set up.
286 318. Motor plough with rear supporting wheel running on the unploughed land.
287 081. Furrow or ditch digger, especially for plantation.
287 082. Motor plough with driving gear for the steering wheels.
287 100. Regulating and clearing mechanism for plough wheels.
287 130. Rotary screw digger.
287 445. Ploughing machine with adjustable frame carrying plough shares and coulters.
287 484. Drill with several rows of teeth.
287 57[illegible]. Field harrow capable of use as a grassland leveller.
287 811. Method of fixing plough bodies.
288 015. Rigid frame hoe carrying the working parts and jointed to the shaft support.
288 569. Arrangement to prevent side displacements of the beam in wheel ploughs.
288 845. A sprung plough body.

288 840. Tillage machine driven by motor and impelled by the alternate action of shovels digging into the ground.
288 882. Method of fixing harrow teeth.
288 883. Drill acting as a borer in the soil (1).
289 482. Antibalance mechanism for tipping ploughs.
289 536. Carriage wheel for motor-driven ploughs and other tillage machines.
289 558. Portability device for wheel ploughs.

Switzerland 73 030. Tilling machine.

United Kingdom 3 517. Subsoil plough.

United States 1 183 309 — 1 185 590. Plough regulators.
1 184 707. Horse hoe.
1 184 832. 2-row maize cultivator.
1 184 900. Double-breasted plough.
1 184 754 — 1 184 768 — 1 186 130. Harrows.
1 185 238. Device for raising and lowering harrows.
1 185 324. Subsoil plough.
1 185 325 — 1 185 504. Ploughs.
1 185 857. Plough disc.
1 185 923 — 1 186 515. Wheel ploughs.
1 186 355. Weeder.
1 186 365. Leveller for ploughed land.
1 186 441. Disc plough.

*Draining and Irrigation.*

Germany 287 809. Device for drying peat beds, marshes, etc.
289 474. Automatic pond-emptying arrangement for irrigation.
289 821. Drains.

*Manure Distribution.*

Germany 288 324. Liquid manure barrel with distributor.
288 350. Appliance for dissolving nutritive salts in irrigation water.
289 973. Manure spreader.

United States 1 185 133. Manure spreader.

*Sowing and Planting.*

Germany 286 694. Elevator for uniformly distributing bodies of different sizes particularly for potato planters.
287 336 — 289 887 — 289 921. Potato planters.
288 042. Drill for sowing at variable depths.
288 070. Drill with wheel for dibbling plants.

*Cultivation.*

Canada 168 186. Glass-house.

Germany 287 063. Automatic arrangement for watering flower beds.
287 069. Glass-house window with wooden sash having grooves in which the glass panes may be inserted.
287 203. Nozzle for garden watering hose.
288 932. Arrangement for heating the ground by tubes placed therein.

(1) See *B.* February 1916, No. 217. (*Ed.*)

289 787. Detachable cement frame for hot beds.
289 788. Arrangement for lopping branches by means of a circular saw fitted at the end of a rod and driven by a pulley with cord.
289 805. Arrangement for regulating the speed of rotation of watering appliances.
289 954. Sash for beds with arrangement by which several at a time may be opened or closed.

Spain 62 202. Vine sulphurator.
United Kingdom 3 968. Compressed air sprayer.
4 473. Sprayer.

*Control of Pests.*

France 480 015. Enclosure for catching rabbits, rats and other small animals.
Germany 287 772. Animal trap.
288 118. Method of destroying insect crop or house pests, and preserving clothing, furs, etc. from injury by them.
288 422. Fly trap with clockwork movement.
288 538. Wild animal trap.
289 330. Ditch arrangement for protecting crops against injurious animals, particularly weevils.
289 462. Fly and gnat trap.
United Kingdom 4 025. Trap.

*Harvesting Forage, Cereals, etc.*

Germany 286 625. Harvesting machine with 2 cutting bars, one mowing flush with the ground, the other located behind and above the first.
287 186. Scythe hammering machine.
288 832. Scythe hammering machine with revolving anvil.
288 884. Rake drum for binders, revolving as soon as a rake has got together a given number of straws.
289 786. Scythe and sickle hammering machine.
289 953. Locking device for the bolt screws used to fasten the teeth or cutting bars on mowing machines.
Netherlands 1 407. Hay-maker.
United Kingdom 3 480. Machine for mowing rice, papyrus and other aquatic plants.
United States 1 184 794. Maize harvester.
1 185 243. Mowing machine.
1 185 430 — 1 185 593. Horse-drawn hay rake.

*Root and Tuber Crops.*

France 478 964. Appliance for aligning beet and other machine-harvested root crops.
Germany 286 275. Machine for lifting beets from 2 rows at once, with 2 adjustable mould boards fixed to a share.
287 337. Machine for lifting beets.
287 418. Machine for lifting potatoes, with loose chains adapting themselves to uneven ground.
287 440. Machine for topping beetroots on several rows at a time.
287 710. Thrower wheel with forward driven forks for potato machines.
288 253. Beet harvester with mechanism for throwing the beets.
288 254. Sorting drum for potato lifting machine, consisting of 2 drums with different meshes engaging in each other.

| | | |
|---|---|---|
| United States | 1 185 540. | Potato, earthnut, etc. harvester. |
| | 185 785. | Beetroot harvesting machine. |

*Threshing, cleaning and sorting Grains and Seeds.*

| | | |
|---|---|---|
| Germany | 287 131. | Automatic thresher feed with arrangement for cutting the binder string. |
| | 287 537. | Shaker for grain sorting. |
| | 288 479. | Appliance for sorting coffee, dried leguminosae and other seeds. |
| | 289 458. | Sorting cylinder with lining made of metal rings or spirally wound metal wire. |
| | 289 559. | Fan for threshing machines. |
| Spain | 61 942. | Thresher. |
| United States | 1 185 957. | Thresher. |

*Conveyance, handling and preservation of crops.*

| | | |
|---|---|---|
| Canada | 158 058. | Protective guard for fruit baskets. |
| | 158 091. | Apple sorter. |
| | 168 152. | Silo. |
| | 168 358. | Exterior arrangement for holding together the planks forming a silo. |
| | 168 484. | Guard device for banana bunches. |
| Germany | 287 083. | Coupling for forage cutters. |
| | 287 101. | Straw-press. |
| | 287 102. | Straw-press for hand binding. |
| | 288 174. | Potato, apple, etc., peeling machine. |
| | 288 351. | Trellis-work support for strawberries and the like. |
| | 289 315. | Chopping machine with sifting arrangement. |
| | 289 316. | Arrangement for cleaning gooseberries and removing their stalks. |
| | 289 457. | Mechanism for parallel direction of the feed cylinders of forage-cutters. |
| | 289 459. | Forage cutters. |
| | 289 460. | Press for cut forage, chop and the like. |
| | 289 461. | Chaff cutter with bent plate having convex cutting edge and plate for compressing the straw (1). |
| | 289 922. | Strawpress with oblique compression channel and needle entering from below. |
| Spain | 61 999. | Straw and hay elevator. |
| Switzerland | 77 909. | Cart for hay and cereals. |
| United States | 1 185 155. | Forage cutter. |
| | 1 185 457. | Appliance for compressing grass in silos. |
| | 1 185 777. | Straw cart. |
| | 1 185 845. | Forage press. |
| | 1 186 302. | Machine for chopping forage for ensilage. |
| | 1 186 505. | Machine for making straw stacks. |

*Livestock Feeding.*

| | | |
|---|---|---|
| Germany | 289 923. | Multiple feed apparatus with food storage tank. |
| United Kingdom | 4 134. | Trough. |

*Industries depending on vegetable products.*

| | | |
|---|---|---|
| Portugal | 9 782. | Appliance for improving wines with high alcoholic content. |

(1) See *B.* April 1916, No. 429. (*Ed.*)

| | | |
|---|---|---|
| Spain | 62 035. | New system of ferro-concrete receptacles for wines. |
| | 62 166. | Appliance for extracting vegetable oils, particularly from olives. |
| United Kingdom | 3 651. | Bottle-washing machine. |
| | 3 609. | Method of extracting the albumen from the residues of various vegetable oils. |
| | 3 854. | Method of filtration of cane juice. |
| | 4 066. | Bottle filling and capping machine. |

*Dairy Industry.*

| | | |
|---|---|---|
| Canada | 168 502. | Churn. |
| Germany | 288 352. | Milk cooling and aerating machine. |
| | 288 714. | Centrifuge for milk and other fatty liquids. |
| | 288 715. | Centrifugal drum with false bottom for discharging skim milk. |
| | 289 442. | Suction milking machine. |
| | 289 537. | Safety device for centrifugal machines for milk and other fatty liquids. |
| | 289 560. | Churn with turbine-driven beater. |
| United Kingdom | 3 782. | Skimmer. |

*Steering and hauling agricultural machines.*

| | | |
|---|---|---|
| Germany | 287 067. | Steering mechanism for agricultural machines with front wheels mounted on pivoting axle arms. |
| | 287 980. | Tractor for tillage machines. |
| | 288 255. | Coupling a train of agricultural machines with a tractor. |
| United States | 1 168 340. | Tractor. |

*Miscellaneous.*

| | | |
|---|---|---|
| Germany | 286 805. | Calk keys for horse shoes. |
| | 287 847. | Wickerwork for fences. |
| | 288 421 — 288 480. | Arrangements for untying cattle in the byre. |
| | 288 738. | Incubator with arrangement for heating and moistening the air introduced. |
| | 289 055. | Eel catcher. |
| | 289 329. | Horse-shoe with non-slipping fitting. |
| | 289 757. | Dog-training device. |

FARM BUILDINGS.

1009 – **Automatic Watering of Dairy Cows** (1). — RINGELMANN MAX, in *Journal d'Agriculture pratique*, Vol. 29, No. 13, pp. 226-227, 4 fig. Paris, June 29, 1916.

A simple and inexpensive system of watering cattle consists in providing beneath the manger *A* (fig. 1) a canal *B* in which the water is maintained at a constant level *x*. To the right of the place of each animal, a mounting is fitted in the manger which can carry a shutter *a*, hinged on 2 pivots *b*, and which the cow pushes to *a'* in order to drink at *B*. The shutter measures 24 to 30 cm in width, and 20 to 25 cm in height.

Instead of using this patent system it is sufficient to place at every second stall a small trough *A* (fig. 2) made of cast iron, stone or cement; in which a pipe *a*, connected to the main *b*, would ensure a standard level of water *x*. To avoid injury, the main *b* may be accommodated in a groove cut on the outer wall *y* of the crib *c*. The stone or cement trough may be

(1) See *B.* 1914, No. 275. (*Ed.*)

supported by a small wall *u*. The cast iron trough is fixed by lugs by means of running bolts or wood screws according as the wall to which it is attached is made of brickwork or wood.

Fig. 1.—*Watering arrangement beneath manger.*

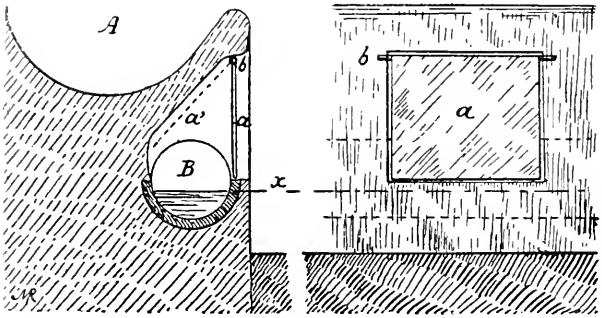


Cross section Longitudinal view

Fig. 2.—*Watering arrangement in front of manger.*

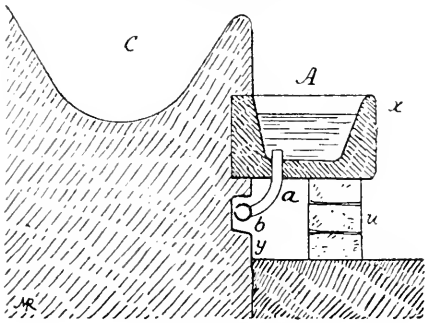


Cross section.

## RURAL ECONOMICS.

1010– **Results of Farm Management Demonstration Work in U. S. A.** — GODDARD L. H., in *Proceedings of the Sixth Annual Meeting of the American Farm Management Association, Berkeley Cal.* 9-10 August 1915, pp. 26-33. Washington, 1916.

The bill which authorised the establishment of the Bureau for Economic Improvement of Farms in the United States Department of Agriculture was passed on the 13th July 1914. The report of the 1st July 1915 shows that the work has been started in 21 States, and that during the period of organisation in the first year, considerable work was done and noteworthy progress achieved.

The work of demonstration was carried out in 105 different zones lying in the 21 States in question in the territory of which the Bureau has up to now been instituted, and comprises the economic study of 8 032 farms. For 5 009 of them the compilation of analytic data serving to bring out clearly in the form of " Farm Analysis Records " the organisation and economic results of the farm has been completed ; 1 952 of these records were returned to the farmers concerned, after careful critical study on the part of the officials who had prepared them (farm compilators). The discussion which took place in this connection concerning the organisation of the farm and desirability of its modification resulted in 542 farmers approving and beginning to carry out certain proposed changes, and 1 439 farmers adopting a system of accounts which will in the future enable them to supply more accurate particulars for the analysis record. Other farmers, to the number of 876, applied for farm demonstrators to make a second visit to their farms in order to obtain advice in connection with reorganisation.

The considerable work accomplished since the outset *i. e.* during the period of organisation, is largely due to the co-operation of the Farm Bureaus and County Agents in the different counties and the Superior Schools of Agriculture. The chief object of the federal farm economics improvement demonstration Bureau is to guide the county agents in this examination of the organisation of farms in their region, in order to come directly to the aid of the farmer who may have adopted an organisation which cannot yield him the normal reward far his labour, and who nevertheless maintains this system. They will point out to him the difference between the results of the organisation adopted by him and those normally obtained in the belt where he operates, and between such results and those secured by more skilful and smart farmers who manage to get the largest possible reward for their labour.

This Farm Economics Improvement Demonstration Bureau has been successfully established in 21 States, and has above all rendered evident the fact that in each region the economic results of the farms varies within wide limits. From the figures relating to 4 400 farms hitherto compiled it is ascertained that the general average of the reward of labour of the farmer was about $ 400. If progressively organised farms are divided into 5 groups of 880 farms each, the 1st group, which represents the highest reward for the farmer's labour, has an average of about $ 1 500; the 2nd group, about $ 700 ; the 3rd about $ 350 ; the 4th about $ 100 and for the 5th the loss is about $ 600.

Thus, $^1/_5$ of the farms not only yield no reward for the manual labour or management of the farmer, but in addition leave a deficit of $ 600 each on an average on the return on the capital reckoned at 5 % and the reward for the labour carried out by the members of the farmer's family.

The Farm Economics Improvement Demonstration Bureau is intended chiefly to come to the assistance of this last class of farmers, by pointing out to them the standard organisations in the zone where they operate, as well as those of farmers securing the best reward for labour.

The appended Table shows by way of example the method of com-

parison of the farm analysis records adopted in criticising the farms of lowest return.

In view of the importance of maize-growing in the region in question, farm *B* shows that it has a unit production superior to the average of the region, and an index of realisation of the products of livestock much higher than the average, and better than that of the most paying farms. The low reward to the farmer, below the average, is exclusively due to the insufficient area of the farm as compared with the unit of labour of the men and horses used. The owner of the farm *A*, who possessed a smaller farm than *B*, rented an area of land which enabled him to get rid of this disadvantageous factor, considering that the normal farm in the region covers about 130 acres. He thus secured a high reward for his labour, in spite of the low efficiency of the conversion of feeds by his cattle. From a study of the various organisations as compared with the standard organisation represented by the average of a large number of farms (50 to 100) for each zone studied, practical indications are drawn for farm organisation considerably reducing the practical apprenticeship of farmers, and laying the rational bases for farm organisation in each agricultural region.

From the experience gained during the first period of organisation of this important demonstration Bureau, the following conclusions are drawn:

1) In each region some farmers obtain results much in excess of the average from their farm.

2) These farms paying better than the others are not easy to distinguish by mere external examination, on the basis of the more or less good condition, the more or less high quality of the livestock, or the total of the cash receipts.

3) The only reliable method for comparing the economic result obtained by a farmer with that of other farmers in a particular region consists in comparing the respective labour incomes (1).

4) For the majority of farmers who wish to improve the economic results of their farms it is extremely useful to determine the labour reward of the farmer, and if it is too low, to analyse the organisation of their farms in its various component parts, and afterwards to compare the data thus isolated with those of other farmers working under like conditions.

5) It is comparatively easy to make a brief analysis record of organisation, to calculate the farmer's labour income, and then to pass on to a critical comparison of these data on other farms, in order to determine the necessary changes in such organisation.

6) Farmers generally are very favourable to this work of demonstrative research, provided the work is put to them in the proper way and at the right moment.

7) County agricultural agents and the teaching staff of schools

(1) The labour of the farmer is calculated by deducting from the gross proceeds the expenses and capital interest at 5 %. The expenses include the labour performed by members of the farmer's family, reckoned according to equivalent wages for hired labour. On the other hand the farm products consumed by the farmer's family do not appear. (*Ed.*)

*Comparison between Farms in the County of Iowa.*

| | Farm *A* | Average of 13 best farms | Average of 62 farms | Farm *B* |
|---|---|---|---|---|
| Farmer's labour income | $ 1 231 | $ 1,050 | $ 145 | $ 72 |
| *Size of farm:* | | | | |
| Total area | 282 acres | 188 acres | 171 acres | 100 acres |
| Cultivated area | 234 | 144 | 125 | 70 |
| Livestock units | 18 | 24 | 21 | 12 |
| Total receipts | $ 3 393 | $ 3 211 | $ 2 430 | $ 1 597 |
| *Quality of Business:* | | | | |
| Livestock: Returns on $100 of feeds consumed | $ 102 | $ 130 | $ 119 | $ 169 |
| *Crop yields:* | | | | |
| Maize . . . bushels per acre | 50 | 43 | 38 | 40 |
| Oats . . . » » » | 37 | 40 | 37 | 37 |
| Hay . . . tons | 1.3 | 1.6 | 1.6 | 1 |
| *Efficiency of labour:* | | | | |
| Crop acres per man | 102 | 85 | 75 | 59 |
| Crop acres per horse | 37 | 22 | 18 | 12 |
| *Diversity of business:* | | | | |
| Principal receipts: | | | | |
| Maize | $ 680 | $ 813 | $ 615 | $ 360 |
| Oats | 584 | 304 | 240 | — |
| Pig breeding | 843 | 868 | 685 | 680 |
| Cattle breeding | 556 | 536 | 359 | 355 |

of agriculture well trained by a farm management demonstrator speedily become capable of rapidly ascertaining the reward of the farmer's labour, and making the comparative examination of organisation of different farms. This special competency of the persons who are at the heads of local agricultural interests in this branch of rural economics forms the first direct object towards which the organisation of this Federal Bureau tends.

8) Many farmers easily succeed in computing themselves the reward of their labour, and analysing their farm, under the guidance of the local farm Bureau, and this is the final object aimed at by the central Government in establishing this Institution.

9) The Farm Economics Improvement Bureau is furthermore highly useful to the county agricultural agents and these whose duty it is to watch over local interests, as it affords them the means to getting a better knowledge of the real agricultural conditions of their region, and the problems

which farmers are called upon to meet, by bringing them into touch with the farmers in a form very promising as regards agricultural progress.

1011 – **Crop Yields and Prices and Future Food Supply in the United States.** — WARREN G. F., in *Cornell University, Agricultural Experiment Station of the College of Agriculture, Department of Farm Management*, Bulletin 341, pp. 185-212. Ithaca, N. Y., February 1914.

From an examination of the unit production of the principal agricultural products in the United States from 1879 to 1912 and their prices from 1840 to 1912, the writer derives the following conclusions, which present general interest from the point of view of the future direction to be taken by production.

The gross prices of agricultural produce from 1905 to 1912 are found to be slightly above those of the average for the last 73 years, as shown by the following table :

| | | | Average for 73 years | Average 1015-1912 |
|---|---|---|---|---|
| | | | — | — |
| Maize | (New York) | per bushel . . . . . | $ 0.66 | $ 0.66 |
| Winter wheat | (New York) | per bushel . . . . . | 1.25 | 1.04 |
| Cotton | (New York) | per pound . . . . . | 0.154 | 0.118 |
| Potatoes | | per bushel . . . . . | 0.65 | 0.62 |
| Oats. | (New York) | per bushel . . . . . | 0.45 | 0.47 |
| Pigs | | per bushel . . . . . | 5.71 | 6.78 |
| Cattle | | per bushel . . . . . | 5.74 | 6.37 |
| Sheep | | per bushel . . . . . | 4.00 | 4.29 |
| Butter | | per pound . . . . . | 0.244 | 0.262 |
| Eggs | | per dozen. . . . . | 0.226 | 0.287 |

The prices obtained by farmers for animal products are seen to be above the average, but those of crops are nearly equal to or below the average for the last 73 years. During an entire generation, in the period of settlement of the great prairies in the West of the United States, the prices were very low, so that in comparison with this period the present prices are no doubt high, but very little exceed the general average for the long period in question. During the last 10-15 years the unit production in East Mississippi has increased rapidly, while before that, especially towards 1890 there was a period of low yields and abandonment of the countryside by young men, due to the excessively low price of products.

Farmers, generally speaking always succeed in increasing the unit production as soon as the prices of products are barely sufficient to justify the increased expense required to obtain an increase in production. In each county of the United States there are still considerable areas of land which might be brought under cultivation by clearance, drainage, irrigation, etc., but the extensions enabling the production to be increased without increasing the cost prices are henceforward very limited. The lands to be cleared, drained, irrigated or heavily manured are expensive lands and their products will consequently be dear. When once an average unit production is attained, every bushel of production obtainable above this average generally costs more than the previous one. The limit of produc-

tion per unit of surface in the United States is far from being attained, but the phase of production at cheap cost price has been passed.

The farmers rapidly adapt their production to the price of products, and if the present prices are maintained the production will increase, and if they go up still further the production may grow considerably.

There is apparently no likelihood of the prices paid to farmers for their products showing a permanent decline. There are some means, however, by which the price of products to the consumers may be reduced The present mechanism of the distribution of agricultural products to consumers is exceedingly expensive in the United States, and a great part of the expenses entailed might be eliminated. A sum ranging from 50 to 66 % of the price paid by the consumer does not reach the producer, and the greater portion of this percentage is absorbed by the town distributing mechanism. It is estimated that one-half of these expenses could be eliminated ; such a saving in distribution would of course entail a change of occupation of a large part of the persons occupied in the present system.

Necessarily, in proportion as the population increases, the consumption of the less expensive commodities also increases, and beef is one of the most expensive agricultural products, because in order to obtain it a considerable quantity of cultivation products must be converted. It has been calculated that a given quantity of cereals can feed a number of persons five times greater than the meat obtainable by transformation of these cereals. With the increase of population, the price of cereals goes up more rapidly than that of meat. A given quantity of products converted into milk produces a larger quantity of commodities intended for human consumption than would the same quantities converted into meat ; consequently the number of dairy cows increases almost parallel with the growth of the propulation. The United States possess one cow to five head of inhabitants. In addition to the milk, this quantity of dairy cattle yearly supplies a calf, a cow and a bull to the butcher for each family.

Pigs convert the food intended for animal consumption more economically than beef cattle, and with the same quantity of cereals a higher proportion of meat is obtained with pigs than with cattle. This explains the increase in the number of pigs and the reduction in the number of beef cattle. Poultry, finally, convert foods still more economically than other classes of domestic animals. The substitution of eggs for beef is observed chiefly in those parts where the greatest increases of population occur. From 1890 to 1910 the increase of the population in the 7 principal egg-consuming markets (New York, Chicago, Boston, Saint Louis, Cincinnatti, San Francisco and Milwaukee) was 78 % and the increased egg consumption amounted to 183 %. When the population becomes very dense, the forage produced on farms is converted into milk, and the meat production is limited to the quantity obtainable from the forage and grasslands still available when the former demand has been met. The quantity of cereals transformed by means of cattle diminishes constantly. This state of things finds its confirmation in the progressive reduction of fattening cattle and in the tendency to kill off young animals for the butcher.

All these modifications in the direction of production prove that the quantity of meat available per inhabitant is diminishing, and that unfortunately the classes who must renounce a large meat consumption are those engaged in manual labour, that is, the very classes who most feel the need for meat food. All this finally proves that the United States are also experiencing the first symptoms of the state of things always observeable in densely populated countries. Though it is likely that in the future the United States will be able to feed the numerous population which is to be anticipated, it is certain on the other hand that the future popullation will not be able to live so well as does the present.

The writer sees in the localisation of manufacturing industry in rural districts the possibility of considerably reducing the cost of living, while allowing the workman's family to have a garden or even a small farm which can furnish vegetables and poultry, together with a sufficient quantity of forage to keep a dairy cow. He nevertheless criticises the opinion maintained by many persons that in order to reduce the cost of agricultural products it would be necessary to break up farms and reduce their size, because nothing but disadvantage to consumers can result from the fact that a greater portion of the products is consumed by a larger number of producers and labour animals employed per unit of area.

In the general farming region, from the State of New York to Nebraska, the tendency in reality is to pass from a farm with two pairs of horses *i. e.* from 80 to 100 acres to one with three pairs, *i. e.* from 120 to 150 acres, owing to the fact that by working smaller areas the horses which are indispensable to haul modern labour-saving machinery are not completely utilised, and consume an excessive proportion of the gross product.

Farms specialising in market-gardening and fruit production may be smaller, but to meet the demand for these products a very small number of farms is required as compared with those needed to meet the demand for cereals, forage, potatoes, livestock and derived products ; for this class of production the medium sized farm, as will be seen, supplies the consumer with a quantity of products per unit of surface greater than that furnished by the farm of smaller area. China, the classical country of the very small farmer, really exhibits a picture of an agricultural population which, in spite of the assiduous labour of men, women and children, scarcely succeeds in producing a little more than what it consumes to live, and which is only able to maintain a small percentage of consumers in towns. The low price of labour is the index to the poverty of this population. As long as the high price of labour continues in the United States, so long will the use of machinery and farm horses be required for growing the principal agricultural products, and this will entail such size of farm as may be adapted to the best utilisation of such machines and horses.

The Author strongly recommends the restriction of immigration by increased severity in the regulations for the admission of emigrants, as forming one of the best means to prevent the cost of living continuing to rise more and more, and putting a stop to the present tendency to lower the standard of living now obtaining.

Furthermore, considering the extraordinary needs for phosphorus for vast tracts of land in the United States, the writer thinks that the time has arrived to make a careful estimate of the stores of phosphates in the United States, and if need be, to restrict their export.

1012 - **Time and Method of Tillage on the Yield and Comparative Cost of Production of Wheat in the Pelouse Region of Eastern Washington.** — THORN C. C. and HOLTZ H. F., in *State College of Washington Agricultural Experiment Station, Bulletin* No. 123, Pullman, Wash., July 1915.

The data summed up in the appended Table result from a series of comparative tests of cultural systems with biennial rotation and systems of tillage of the soil, for wheat growing in the region of Pelouse, in the east of the State of Washington, U. S. A. These trials were carried out in such a way as to eliminate as far as possible the influence of factors other than those inherent in the different methods of soil tillage, both as regards the time and mode of carrying them out.

| System of cultivation | Yield in bushels per acre | | Gross returns per acre | Cost per acre | Net returns per acre |
|---|---|---|---|---|---|
| I. Maize and wheat alternating, with annual autumn ploughing. . . . . | maize<br>wheat | 30.0<br>37.8 | $ 56.24 | $ 13.65 | $ 42.59 |
| II. Alternate peas and wheat, with annual autumn ploughing . . . . . | peas<br>wheat | 32.0<br>33.7 | 52.56 | 17.35 | 35.21 |
| III. Wheat and summer fallow, with autumn ploughing after wheat . . . | wheat | 49.4 | 39.50 | 10.05 | 29.45 |
| IV. Wheat and summer fallow, early spring ploughing (April 3) and rolling | wheat | 49.0 | 39.20 | 10.55 | 28.65 |
| V. Summer wheat and fallow; early spring ploughing (April 3) without rolling . | wheat | 51.7 | 41.36 | 10.35 | 31,01 |
| VI. Summer wheat and pasturage, with autumn ploughiug after pasturage. . | wheat | 20.2 | 17.16 | 6.15 | 11.01 |
| VII. Summer wheat and fallow, with late spring ploughing (June 10) and rolling . . . . . | wheat | 38.5 | 31.00 | 8.80 | 22.20 |
| VIII. Summer wheat and fallow; late spring ploughing (June 10) without rolling . . . . . | wheat | 36.6 | 29.28 | 8,05 | 21.23 |
| IX. Summer wheat and fallow; early spring disking (April 3), late spring ploughing (June 10), rolling. . . . . | wheat | 42.4 | 33.92 | 9.70 | 24.22 |
| X. Summer wheat and fallow; autumn harrowing, late spring ploughing (June 10), rolling . . . . . | wheat | 37.3 | 29.84 | 9.20 | 20.64 |
| XI. Summer wheat and fallow; autumn ploughing, late spring harrowing (June 10) . . . . . | wheat | 49.7 | 39.76 | 9.45 | 30.31 |

The analytic calculation of the expenses was made according to the following actual unit costs (per acre):

| | | | |
|---|---|---|---|
| Ploughing | $ 1.50 | Binding and shocking wheat | $ 1.35 |
| Disking | 0.50 | Cultivating maize | 0.50 |
| Harrowing | 0.20 | Maize harvesting | 2.00 |
| Rolling | 0.50 | Pea harvesting | 2.00 |
| Sowing | 0.40 | Threshing | 0.10 per bushel |

The cost of cultivation calculated in this way is only aimed at bringing out clearly the relative value of the different systems in reference to the biennial rotation used, and making a fresh contribution to working economics as regards the wheat growing in the region where the comparative trials were conducted.

1013 – **Enquiry into the most usual Depreciation Rates for Agricultural Machinery in Minnesota, United States.** — *Farm Implement News*, Vol. XXXVII, No. 22, p. 18. Chicago, June 1, 1916.

The Farm Economics Bureau of the Minnesota College of Agriculture has published the results of the enquiries carried out on 24 farms in the State of Minnesota, for determination of the rate of depreciation of the principal agricultural machines.

The figures of Table I represent the average for the 24 farms studied, and the observations are based on the use of the machines in question during 10 years.

TABLE I.

| Name of Machines | Annual rate of depreciation |
|---|---|
| Grain binders | 6.54 % |
| Grain drills and seeders | 5.06 |
| Maize binders | 7.97 |
| Maize planters | 6.41 |
| Maize cultivators | 6.23 |
| Mowers | 6.80 |
| Hay tedders | 4.21 |
| Hay loaders | 7.37 |
| Rakes | 6.30 |
| Gang ploughs | 6.41 |
| Sulky ploughs | 8.34 |
| Walking ploughs | 5.85 |
| Waggons | 3.89 |
| Harrows | 5.88 |
| Discs | 5.29 |
| Manure spreaders | 10.37 |
| Hay elevators | 8.54 |
| Reapers | 9.27 |
| Silage cutters | 7.43 |
| Cream separators | 7.93 |
| Fanning mills | 3.74 |

These rates of depreciation are based on an extensive use of the machines, as is apparent from the low unit rate per acre obtained on taking into account the area annually tilled (see Table II).

TABLE II.

| Machinery | Average value consumed annually per acre |
|---|---|
| *For cereals:* | |
| Binders | $ 0.168 |
| Drills | .072 |
| Fanning mills | .014 |
| Waggons, sleds and racks | .077 |
| *For maize:* | |
| Reapers and binders | .604 |
| Cultivators | .223 |
| Planters | .083 |
| Silage cutters | 1.216 |
| Waggons, etc. | .195 |
| *For hay:* | |
| Mowers | .167 |
| Rakes | .079 |
| Forks, slings etc. | .046 |
| Loaders | .095 |
| Tedders | .062 |
| Waggons, etc. | .155 |
| *For cultivation generally:* | |
| Ploughs | .095 |
| Harrows | .019 |
| Disc pulverisers | .037 |
| Manure spreaders | .337 |

1014 – **Profit ensured in Southern Rhodesia by Treating Potatoes with Bordeaux Mixture.** — JACK RUPERT W., in *The Rhodesia Agricultural Journal*, Vol. XIII, No. 3 pp. 354-360, Pl. I-II. Salisbury, Rhodesia, June 1916.

The writer proposed to ascertain whether, from the financial point of view, there was any advantage in treating potatoes with Bordeaux mixture for control of the disease known as " early blight " caused by *Alternaria Solani*.

The experiments, which were continued for three years, dealt with the " Up-to-date " variety, the chief one grown in the region under examination, and also one of the most resistant to the disease. In the experiments, every second row of potatoes was treated and the intermediate row left for control of the results. In this way, the errors due to the differences of fertility in the other plots and those produced by irregularity in the spread of the disease were avoided. Furthermore, the rows treated were nevertheless exposed to infection from the untreated neighbouring rows, while in the latter, the risks of infection by the passage of spores from one plant to another were reduced by the presence of treated rows.

In short, the conditions were such that they tended to reduce the differences of yield due to the treatment between the treated and the untreated lines

TABLE I. — *Increase of yield due to spraying.*

| Number of days between 2 successive sprayings | Number of sprayings | Total yield | | | Table potatoes | | | Seed potatoes | | | Marketable potatoes |
|---|---|---|---|---|---|---|---|---|---|---|---|
| | | Treated | Untreated | Percentage of increase | Treated | Untreated | Percentage of increase | Treated | Untreated | Percentage of increase | percentage of increase |
| | | lbs. | lbs. | | lbs. | lbs. | | lbs. | lbs. | | |
| 7 | 7 | 104 | 77 | 53 | 38 | 16 | 137 | 41 | 26 | 57 | 88 |
| 14 | 4 | 87 | 59 | 30 | 15 | 10 | 50 | 41 | 28 | 46 | 47 |
| 21 | 3 | 87 | 77 | 16 | 19 | 15 | 26 | 48 | 42 | 14 | 17 |

TABLE II. — *Estimate of profit due to spraying.*

| Number days between 2 sprayings | Number of sprayings | Marketable tubers increase per acre lbs. | Value, at 3/4 d. per lb. | Cost of spraying at 10/— per acre | Net profit per acre from spraying |
|---|---|---|---|---|---|
| | | | £ s. d. | £ s. d. | £ s. d. |
| 7 | 7 | 3 772 | 11.15.0 | 3.10.0 | 8. 5.0 |
| 14 | 4 | 1 836 | 5.15.0 | 2. 0.0 | 3.15.0 |
| 21 | 3 | 1 020 | 5. 4.0 | 1.10.0 | 1.14.0 |

In spite of this the differences were considerable, as will be seen from the appended tables, the first of which gives the increase of yield due to the treatment, and the second the profit secured by the operation. The treatment was carried out with a Bordeaux mixture consisting of 4 lbs of copper sulphate and 4 lbs of fresh lime per 40 gallons of water. The rows were 2 feet 6 inches apart, and the plants 15 inches apart in the rows.

## AGRICULTURAL INDUSTRIES.

1015 – **Conditions under which the Cold Storage Industry will Render the greatest Services to the Vine-Growing Industry in Tunisia.** — RAY GEORGES, in *Le Froid*, 4th Year, Vol. IV, No. 1, pp. 19-34, diagrams 5. Paris, January-June 1916.

INDUSTRIES DEPENDING ON PLANT PRODUCTS

The writer points to the special interest presented by the application of cooling methods in wine growing in Tunis, where, owing to very high

temperatures, the alcoholic fermentation of the musts may be either disastrously shortened or dangerously prolonged as the case may be.

*The Question of Musts.* — In normal years, the methods of control usually employed in Tunisian wine cellars to obviate an excessive rise of temperature in the vats give satisfactory results, if care is taken to work on normal musts properly corrected with regard to the due proportions of their elements, especially in respect to acidity and saccharine content. The usual means of prevention consist in :

1) Cooling the grapes as a prior precaution during the night, leaving them outside in pans or boxes, after sometimes sprinkling them with water ; 2) using small vats, in which the losses of heat by radiation are proportionally larger than in the large ones ; 3) raising of the must, with or without aeration ; 4) drawing off must, that is to say racking, as soon as the temperature in the vats reaches the dangerous point (35-37°C) ; 5) using metallic vats in order to increase the loss of heat by radiation ; 6) using cooling agents ; unfortunately the water for feeding these cooling agents is insufficient and lukewarm ; 7) using antiseptics, the mutage being effected with sulphyrous anhydride, on condition that not more than 450 mmg. of sulphurous acid per litre (of which 100 mmg. in the free state) remains in the wine ; 8) using local yeasts acclimatised to sulphurous anhydride ; 9) utilising several of the above mentioned methods of prevention together.

In hot years, as for instance 1913, these methods are often impotent to moderate the irregular course of fermentation. The following two examples are given : 1) the first relates to a highly concentrated must, as it shows an initial density of 1093 (or 218 grms. of sugar per litre). The first slight sulphuring is carried out (7.5 grms. of sulphurous acid per hectolitre) and fermentation starts pretty rapidly, being activated by the raising of the must ("remontage"). As early as the third day, dangerous temperatures are reached, and on the fourth the temperature is 37° C. The cooling is then done by a refrigerator, which brings it down to 34° C. and then, after another rise, the must is racked off at 33.5° C. 7 days were required to effect attenuation which was quite inadequate because racking is effected at 1013 (instead of 0.995-0.997 which a normal fermentation of 4 days should produce) 2) The second example, on the contrary, presents the case of a highly accelerated fermentation. After sulphuring with 15 grms. of sulphurous acid per hectolitre, the temperature reaches 35° C. in 12 hours. The first refrigeration entails a gain of two degrees only, then the temperature goes up again to 35° C. and a second refrigeration is effected. Racking is carried out after barely 4 days of fermentation, with an almost normal reduction.

*Possible Solutions.* — It results from these facts that the means customarily used to prevent abnormal rises of temperature in the fermenting vats are powerless in hot years to ensure satisfactory cooling. Consequently the possible solutions are considered, and are brought under two general methods : *A*) wine making is conducted during the hot season, the effect of cooling being increased by resort to artificial cold; *B*) or the principal fermentation should be left over for a temperate period (autumn or winter),

muting the must by a suitable process, which forms the very essence of wine making.

*A.* — In order to increase the effect of refrigeration, either ice must be used for storing cold, or the necessary cold must be produced on the spot by means of a freezing machine. In either case, refrigeration may be effected in the vats direct, or outside, the usual refrigerating agents being retained.

(*a*) For refrigeration in the vats, the addition of ice to the must, which is a watering prohibited by law, is not to be thought of. On the other hand ice floats might be employed, as in breweries. The cooling effect, however, is rather limited owing to the small bulk of the floats, and it is fairly difficult to put the latter in owing to the cap formed by the grape skins. To overcome this difficulty the method proposed by commandant SIGAUT is suggested, which consists in adding to the must to be cooled blocks of must frozen in ice-making machines. There remain the stationary or detachable devices for control of temperature. The fixed ones, which form an expensive and troublesome method cannot be recommended; the detachable ones, similar to the "flags" utilised in breweries, might render very great service on condition that they are designed in such a way that they can be easily immersed in the small depth of liquid lying above the crust.

(*b*) The system of cooling outside the vats presents the advantage that the already existing refrigerators can be used, it being sufficient to increase their effect by feeding them with frozen water or even with non-freezing brine. The carriage of the ice however in Tunis presents some difficulty, so that it seems desirable to resort to the installation of a small freezing machine in each cellar.

(*c*) There remains the idea, again modelled on breweries, of cooling the whole room in which fermentation takes place, in the hope of securing, by low fermentation, an apparently more rational utilisation of the yeast and smaller losses by evaporation (alcohol and bouquet). The writer, after recording the failure of the attempts made in this direction, considers this process as unrealisable both from the practical and economical point of view.

*B.* — Finally the industrialisation of the wine industry, to be carried on in big factories working throughout the year, appears to be the most satisfactory solution as regards the future of the problem of the wine manufacture in hot countries. It is suggested that the preservation of the must without antiseptics (or after slight sulphuring) might be ensured by keeping in cold storage depots where it would wait for the favourable period for fermentation, after which it would be brought back to the cellar.

*Immediate Solutions.* — Until such time as the industrial methods of breweries are adopted (the really rational solution of the problem), the Author suggests immediate solutions of the problem by which, without heavy cost, the recurrence of difficult seasons such as that of 1913 might be avoided.

The idea of effecting a low fermentation in wine manufacture must be dismissed completely. North African yeasts are excellent yeasts, and it is not expedient to make them work at temperatures below 28-30°C. On the other hand, an increase of temperature in the vats must be prevented

in order not to exceed the fatal figure of 33°C, which may be done by the use of ice or by installing a freezing machine, either system being employed for suitably cooling the water circulation intended for feeding the ordinary refrigerators. The expense of purchase and installation of a small cooling machine is relatively small, and the plant might be utilised for various purposes, the most interesting of which would be the concentration of musts with a view to obtaining " mistelles ". The clarification of young wines by cold, and that of liqueur wines, and the preservation of musts in order to produce " non-alcoholic wines " are also points likely to attract attention.

1016 – **Methods of Detecting the Admixture of Cider to Wine.** — DELLE E., in *Le Moniteur Vinicole*, 61st Year, No. 28, Paris, July 11, 1916.

A fraud is perpetrated whenever a mixture of wine and cider is sold under the name of wine, and it is essential, when the case arises, to detect this fraud by carrying out the analytic and organoleptic investigations by which it may be determined.

According to the writer, one of the safest reactions is the special smell given off by the extract when calcined to ash ; it is easy to recognise the odour peculiar to cooked apples or pears. In order, however, to distinguish this odour quite clearly, the liquid must be gently heated over a burner or a spirit lamp, and the vessel removed from time to time from the source of heat, because if it were maintained in the hot part of the flame irritating smoke would be produced, which would affect the sense of smell and disguise the particular odour sought for. The proportion of alcohol in the extract and the percentage of malic acid should be used to confirm the impression gained in this way.

Furthermore, when cider is distilled, the alcohol has a peculiar smell, due partly, but not wholly, to the acetic ether. Its smell is easily detected, even in a mixture, by the practised sense.

In conclusion the different chemical methods utilised for determining the percentage of malic acid are enumerated.

1017 – **Preparation of Germ-free Maize Flour ; Investigations in Hungary.** — WEISER ETIENNE, in *Vegyészeti Lapok* (Journal of Chemistry), Year XI, No. 11, pp. 99-100, Budapest, June 10, 1916.

It is well known that flour, semolina and maize bran prepared on the method of grinding generally adopted in Hungary, comparatively soon deteriorate. Their deterioration, which is indicated by a more or less rancid odour, is occasioned by the decomposition of their fatty matter. The bulk of the latter being furnished by the germs, the products could keep for a greater length of time if the germs were removed at the time of their preparation.

HABERLAND and LEG found in 6 samples of maize, from 10.62 to 12.23 % of germs, that is on the average 11.68 lbs of germs per 100 lbs of maize. These results agree with the figures of BALLAND, according to which 100 lbs of maize would yield 12.4 lbs of offals, 74.1 lbs of floury grain and 13.5 lbs of germs. According to BALLAND, the chemical composition of these 3 components is as shown in Table I.

TABLE I. — *Chemical Composition of the 3 components of the Maize Grain.*

| | Husk | Flour | Germs |
|---|---|---|---|
| Water | 9.80 % | 12.10 % | 7.20 % |
| Crude protein | 7.40 | 7.50 | 14.22 |
| Crude fat | 2.10 | 0.95 | 36.98 |
| Crude fibre | 10.15 | 0.35 | 1.85 |
| Ash | 1.30 | 0.60 | 7.30 |
| Nitrogen-free extract | 69.25 | 78.50 | 32.45 |

According to these figures, the maize germ contains as much fat as the seeds richest in fat cultivated in Hungary.

The grinding of the maize grain with germs removed has long been practised in America, and also in Hungary, where, at the "Hungaria" mill (Budapest) the germ separated from the flour and the semolina is added to the bran. Thanks to this process the flour and semolina are capable of being kept for a long time ; on the other hand, the bran mixed in this way with the germ keeps for a very short time only. In addition, this operation precludes any utilisation of the oil contained in the germ.

Mr. JEAN MELEGA, a miller at Orosháza (comitat of Békés), has advised a method of germ removal from grain and extraction of the oil of the removed germs which has attracted the attention of Hungarian millers. This operation being very simple, each mill will be able to prepare flour, semolina and bran germ-freed, and to produce maize oil. The method is as follows :

The maize grains, freed beforehand from impurities, are several times passed through a number of fluted rollers, the flutings in the lower ones being closer than in the upper. The ground grains fall on a bolting machine, which allows the flour and semolina to pass through but retains the germ. The germ is ground and then bolted ; this process is repeated until the bran is entirely removed from the germ. The oil is then expressed from the latter and the oil cake is left behind as a food for livestock.

The writer has analysed all the products of maize grinding taken from the mill of Orosháza, and has obtained the results set out in Tabie II.

TABLE II. — *Chemical Composition of the Products of Maize-grinding.*

| | Water | Crude protein | Pure protein | Crude fat | Crude Cellulose | N. free extract | Ash |
|---|---|---|---|---|---|---|---|
| Whole grains | 16.9 % | 9.0 % | 8.7 % | 4.0 % | 1.7 % | 67.3 % | 1.1 % |
| Flour from grain with their germs | 16.9 | 8.8 | 8.6 | 3.9 | 1.2 | 67.9 | 1.3 |
| Flour from grain with germs removed | 18.2 | 7.2 | 7.0 | 1.6 | 0.7 | 71.7 | 0.6 |
| Semolina with germs removed | 13.9 | 9.0 | 8.1 | 1.4 | 1.0 | 73.7 | 1.0 |
| Bran with germs removed | 12.6 | 9.6 | 9.0 | 6.5 | 10.6 | 58.6 | 2.1 |
| Germ cake | 8.7 | 16.8 | 15.2 | 10.6 | 4.7 | 53.5 | 5.7 |
| Germ before oil is expressed | 16.2 | 14.3 | 13.0 | 17.6 | 3.3 | 43.7 | 4.9 |

The MELEGA process therefore furnished fairly good results : there is a substantial difference in the percentage of fat between the flour of whole grains and that of grains with their germs removed, which would seem to show that the latter flour can be kept longer than that of maize prepared on the method generally adopted hitherto in Hungary. The percentage of fat in the bran is not very much diminished as compared with the corresponding percentage in the bran produced on the old method, which proves that the sample examined still contained a fair amount of germ. According to the analysis of the writer, the content of fat in several other samples of maize bran fluctuated between 7 and 14 %. The content of fat in the germ cake is relatively rather high, which must be attributed on the one hand to the fact that the sample taken had not been sufficiently pressed, and on the other that it still contained a fair amount of bran (the latter retaining a good deal of oil). Therefore the more successfully the husk parts are removed from the germs the more oil will be extracted.

The writer also made a series of investigations into the oil yield, and found that 100 lbs of maize contained 4 lbs of oil. The quantity of the different products of grinding and their percentage of oil was as shown in Table III.

TABLE III. — *Oil Yield of the Maize Grain and its various Grinding Products.*

| | | | | | | | | |
|---|---|---|---|---|---|---|---|---|
| 70 lbs | of flour and semolina | with | 1.6 % | of oil | yielded | 1.12 | lbs | of oil |
| 13 ,, | ,, germ flour | ,, | 17.6 % | ,, | ,, | 2.20 | ,, | ,, |
| 8 ,, | ,, bran | ,, | 6.5 % | ,, | ,, | 0.52 | ,, | ,, |
| 5 ,, | ,, flour | ,, | 1.4 % | ,, | ,, | 0.07 | ,, | ,, |
| 4 ,, | ,, loss | | | | | | | |
| 100 lbs | of maize yielded . . . . . | | | | | 4.00 | lbs | of oil |

The oil expressed from the germs is transparent and reddish-brown in colour. For its chemical composition the writer found practically the same figures as other workers. When refined, maize oil is edible ; it may also be used for manufacturing margarine and similar fats, coloured soaps, etc.

Several enquiries have been addressed to the Hungarian Station of Biology and Animal Feeding in Budapest as to whether the extraction of the fat from the maize grains will not unfavourably affect the fattening of pigs. No doubt the nutritive value of maize rich in fat is greater than that of maize poor in that substance, because among nutritive substances fat contains the highest value of chemical energy. The writer ascertained that the extraction of the fat reduced the gross value of the chemical energy of maize by 6.25 %. On the other hand, as compared with this relatively small loss, the extraction of the fat from maize entails the following advantages :

The semolina of maize poor in fat keeps better than that from which the germs have not been removed.

With the extraction of the fat there is a slow increase in the quantity of protein, which is of advantage from the point of view of feeding young pigs.

It is well known that maize oil softens the fat of the pig and thus impairs its quality. On the other hand the fat produced by feeding with maize poor in fatty substance is firmer, and thus possesses more value than just mentioned.

1018 – **A Cheap Process for Extracting the Oil from Oil fruits and Seeds and their Residues (black Olives and Oilcakes) by means of non-inflammable Solvents.** — See No. 1006 of this Bulletin.

1019 – **The Conversion of Fruits and Vegetables into Dried Products: Experiments at the Royal School of Horticulture and Pomology of Florence, Italy.** — VALVASSORI V., in *Atti della Reale Accademia economico-agraria dei Georgofili di Firenze*, 5th Series, Vol. XIII, Part 2, pp. 56-64, 1 fig. Florence, April 1916.

For the preparation of dried *pears* and *apples* the best results have been obtained on the following method. The fruits, having been peeled and cut in halves, are subjected to the action of sulphurous anhydride in a chest fitted with gratings, are then scalded in a steam stove and dried in a RYDER drier at a temperature of 80° to 90°C. The length of time found best in the treatment with sulphurous anhydride and with steam, and in drying, were the following respectively :

| | Sulphurous anhydride | Steam | Drying |
|---|---|---|---|
| For the "Coscia" pear . . . . . | 15 minutes | 10 minutes | 8 hours |
| " " "Gentil bianco" . . . . . | 10 " | 5 " | 8 " |
| " " "William" . . . . . | 15 " | 5 " | 8 " |

The "Tondona President", a non-clingstone peach, peeled, cut into halves, with its stone taken out, sulphured for 15 minutes and kept in a drier at the above temperature for 7 to 8 hours, yielded a fine product. A similar method was adopted with apricots.

In the experiments made with plums, the varieties "Friulana", "Claudia mostruosa" and "Porcina" were used. The first appeared very well adapted for drying, the second less so, and the last not at all. The "Friulane" plums were subjected partly to the treatment with steam for one and a half minutes, partly to scalding in a boiling solution of 5 % strength potassium carbonate, and afterwards plunged into running water. Both the first and the second were then placed in the drier for 3 days, at first in a closed drier at 50°C., and then at 60-70°C., finally in an open drier at 80-90°C. Both groups came out successfully. The fruits did not crack. Those which had been treated with steam dried more quickly than the others.

"Turca" and "Pistoiese" cherries treated with steam for 5 minutes, then kept in a drier at 80-85°C, dried in about 12 hours and yielded a fine product. Those which had not been treated with steam afterwards required a longer time for drying.

The figs of the "Dottato" variety, peeled or cut open in halves, or whole, treated with sulphurous anhydride for 30 minutes and kept in a drier at 40-50°C. for 2 or 3 days, gave a good result in all cases.

*Length of time during which Vegetables must be scalded or treated with steam; temperature; length of drying and yield of the vegetables mixed to form a "Julienne".*

| Kitchen Garden Products | Time during which products must be scalded (Sc) or steamed (St) | Drying temperature | Time required for drying | Yield per 100 lbs. of the fresh vegetables | Special solutions for scalding |
|---|---|---|---|---|---|
| Potatoes | Sc 3 to 5 minutes | 50–60° C | 10 hours | 30 lbs. | Steep in water with 0.5 % solution of bisulphite of soda; also for potatoes only, scald in salt water of 2.5 % strength |
| Carrots | Sc 2 1/2 | 60–65 | 10 | 11 | |
| Kohl-rabi | Sc 3 to 4 | 50–60 | 8 | 10 | |
| Headed cabbage, | St 2 to 3 | 50–60 | 7 | 7 | |
| Green cabbage | St 2 to 3 | 50–60 | 7 | 7 | |
| Cauliflower or sprouts | Sc 5 | 60 | 9 | 4 5 | Scald in 3 % salt water. |
| Spinach | St 1/2 | 30–40 | 6 | 6 | |
| Celery leaves | — | 40–50 | 6 | 20 | |
| Kohl-rabi leaves | Sc 2 to 3 | 40–50 | 6 | 8 | Scald in water with 2 ‰ bicarbonate of soda. |
| Peas | Sc 4 | 40–50 | 7 | 6–7 | |
| French beans | Sc 1 | 50–60 | 8 | 8 | |
| Onions | — | 40–50 | 10 | 15 | |
| Leeks | — | 40–50 | 8 | 11 | |
| Turnip roots | Sc 2 to 3 | 50–60 | 8 | 10 | Scald in 3 % salt water. |
| Celery | — | 40–50 | 9 | 6 | |
| Parsley leaves | — | 40–50 | 9 | 18–20 | |
| Turnip leaves | St 1 to 2 | 40–50 | 6 | 8 | |

In the appended Table there are summarised the experimental results obtained by the writer in connection with the drying of mixed vegetables to form a " Julienne ". A mixture in the following proportions is advised, adopted by the School of Pomology of Florence (of which the writer is the director) and a big factory at Gorizia: Potatoes, 30 %; carrots, 25 %; kohl-rabi (roots), 3 %; celery (sticks), 4 %; headed cabbage, 6 %; green cabbage, 10 %; cauliflower, 5 %; spinach, 1 %; celery leaves, 1 %; kohl-rabi leaves, 1 %; parsley leaves, 1 %; turnip leaves, 1 %; French beans, 5 %; onions, 2 %; leeks, 2 %; turnips (roots), 3 %.

1020 – **Utilisation of Cherry By-products.** — RABAK FRANK, in *U. S. Department of Agriculture, Bulletin* No. 350, 24 pp. Washington, D. C., March 10, 1916.

In the North Atlantic, North Central and Western States of the North American Union, the cherry preserving industry is extensively developed, and enormous quantities of unutilisable fruit, stones and juice are turned out, which are at present wasted, though it would be possible to convert them into products of great commercial value.

According to the 13th census of the United States, in 1909, the production of cherries was 271 597 bushels in the State of New York, 338 945 bushels in that of Michigan, 81 340 in Wisconsin, and 501 013 in California. The present production is no doubt very much greater. About 80 % of the crop is converted into preserves.

Of the two by-products, stones and juice, of the cherry preserving and jam making industry, the stones have the greater commercial value; they represent about 15 % by weight of the cherries. The writer calculates that in 1914, 1 400 tons of them were produced in the Union. The juice which comes out together with the stones when the latter are removed is estimated at about 70 gallons per ton of cherries. Consequently the quantity lost is approximately 112 000 gallons per year.

As is evident from the experiments made by the writer, it is possible by means of solvents to extract from the stones of crushed cherries 8.3 % of a fatty oil (pit oil); or they can be broken, the kernels taken out, and from the latter by hydraulic compression about 30 % of fatty oil (kernel oil) extracted. The resulting oil cake steeped in water and afterwards distilled in a current of steam, furnishes about 1 % of a volatile oil; the residue of this distillation, when reduced to flour, may be used for cattle feeding.

Of the two above mentioned oils, the fatty oil is light golden yellow in colour; it has a bland and agreeable odour, and a fatty taste recalling that of the nut. It does not differ essentially from the oils of sweet almonds, peaches or apricots; it should therefore have a commercial value approaching theirs, and be capable of the same uses, namely, pharmaceutical, food, soap manufacture, etc. The volatile oil is for all practical purposes equal to that of bitter almonds, and may be put to the same uses in pharmacy, perfumery, manufacture of sugar-almonds, etc.

Table I sets out the physical and chemical characters of the fatty pit oil (extracted with ether) and kernel oil of cherries; Table II, the characteristics of the volatile oil; and Table III the composition of the oil cake.

TABLE I. — *Physical and chemical characteristics of fixed cherry oil.*

| | Stone oil | | Kernel oil |
|---|---|---|---|
| | crude | refined | |
| Specific gravity at 25° C. | 0.9019 | 0.9137 | 0.9092 |
| Index of refraction at 25° C. | 1.4635 | 1.4641 | 1.4635 |
| Freezing point | 11° to 12° C | 12° to 12°.5 C | 13° to 13°.5 C |
| Neutralisation index | 192.4 | 179.7 | 180.8 |
| Iodine index | 99.9 | 93.7 | 92.8 |
| REICHERT-MEISSL figure | 6.32 % | 3.665 % | 4.72 % |
| Soluble acids (reckoned as butyric acid) | 1.22 % | 0.473 % | 0.469 % |
| Insoluble acids | 99 % | 92.5 % | 92.8 % |
| Acetyl value | 20.3 | 3.45 | 12.67 |
| Non-saponifiable | 2.45 % | 1.12 % | 0.44 % |

TABLE II. — *Physical and chemical characteristics of volatile cherry oil.*

| | Oil extracted from the pit oil cake | Oil extracted from kernel oil cake |
|---|---|---|
| Colour | light yellow | golden yellow |
| Smell | pleasant, strong, bitter almond | pleasant, characteristic |
| Taste | sweet, very tart | sweet, very tart |
| Specific gravity at 4° C | 1.050 | 1.012 |
| Hydrocyanic acid | 4.21 % | 7.94 % |
| Benzoic acid | 81.53 % | 67.95 % |

TABLE III. — *Composition of cherry kernel cake (after extracting the fatty oil and the volatile oil, and dessiccation).*

| | |
|---|---|
| Moisture | 1.06 % |
| Ash | 3.94 |
| Protein | 30.87 |
| Nitrogenous substances | 42.13 |
| Cellulose | 8.60 |
| Ethereal extract | 13.10 |

The writer calculates that the United States might produce each year: *a*) 268 000 lbs of fatty cherry oil, of a value approximate to that of peach oil, which has ranged from 22 cents per lb in 1913 to 45 cents in 1915; *b*) 6 000 lbs of volatile oil of a value close to that of the oil of bitter almonds, which in January 1916 was quoted at 9.25 to 11 dollars per pound; *c*) about 300 tons of distilled oil cake flour.

The juice obtained on extracting the stones is a light red liquid, with a taste and smell characteristic of the cherry. 1) By neutralising the acidity of the juice with milk of lime, and afterwards filtering and evaporating, a syrup is obtained of an agreeable, sweet, slightly tart flavour. The yield of syrup is about 20 % of the juice. 2) By fermenting the juice and afterwards distilling it, 4.6 % of alcohol of 95 % strength by volume is obtained. 3) By concentrating the juice with an addition of pectine or other gelatinous substances and sugar (1 lb of sugar per 1 200 cc. of juice), an excellent jelly is made.

If the whole of the juice turned out annually in the United States were converted into one of these three products, there would be 5 000 gallons of alcohol, or 21 000 galls. of syrup, or 85 680 galls. of jelly. In view of the large demand for these last two products, their manufacture would undoubtedly be the most profitable.

1021 - **The Dairy Industry in Argentina and Plans for its Future Development.** — BERGÉS PEDRO, in *Anales de la Sociedad Rural Argentina*, Year LI, Vol. 4, pp. 81-131, 21 figs. Buenos Aires, March-April 1916.

INDUSTRIES DEPENDING ON ANIMAL PRODUCTS

This work received a prize in a competition for an essay on scientific agriculture, livestock and agricultural industries, organised by the "Sociedad rural argentina" in connection with the International Exhibition of Agriculture in 1910. It deals with the following subjects : the present state of the dairy industry, sanitary inspection; control of the quality of milk intended for human consumption and for butter making ; economic returns of the dairy industry, comparison of the conditions of this industry in Argentina with its conditions in those countries where it has attained its greatest development ; methods to be adopted in order to effect reliable and rapid progress.

I. — ORIGIN AND PRESENT CONDITION OF THE DAIRY INDUSTRY IN ARGENTINA — (a) *Production and consumption of milk and dairy produce.* Until 1894, the milk products were so limited in quantity that there was practically no necessity to export. In that year exportation to England and France began, and afterwards to Brazil, Paraguay, Uruguay, Bolivia, Belgium and Italy. From 1894 to 1899, there were exported in all 3 044 tons of butter. The figures for the following year are set out in table I. This table shows that during the five-year period 1902-1906, the dairy products industry in Argentina underwent some development, which was followed by a retrogression in the following five years, although the country possesses 15 million cows, of which little more than 2 million were classed as dairy cows in the cattle census of 1908. Thus, from 1905 onwards, the exportation of condensed, sterilised and desiccated milk is seen to disappear from the statistics.

During the period 1903-1908, the consumption of butter in Argentina remained stationary ; that of cheese increased by 3 2000 000 kg. though the corresponding increase in the national production was only 687 000 kg. During the period 1903-1912, the consumption averaged 700 gr. of butter and 550 gr. of cheese per inhabitant per year. Condensed milk and malted milk are furnished almost exclusively by importation, which is con-

tinuously growing. Consequently, while the national consumption of milk products undergoes continuous increase, the manufacture of cheese and condensed milk is falling off and becomes more and more incapable of meeting the need.

b) *Extension of the industry in the country.* — Dairies are concentrated in the environs of the capital of the Republic and in the provinces of Buenos Aires, Entre Rios, Santa Fé and Cordoba. In 1907, which is the most recent year for which statistics are available, there were in Argentina 409 dairies, 29 butter factories, 85 cheese factories and 56 mixed establishments, of which 330,23,69 and 37 respectively were in the province of Buenos Aires, including the capital. The total quantity of milk treated in these establishments was 206 822 196 kg. of which 173 684 354 kg. in the city and province of Buenos Aires. The number of establishments nearly doubled from 1903 to 1908. It is on the increase in all the provinces, particularly those of Buenos Aires and Santa Fé.

TABLE I. — *Export and import of dairy products in Argentina during the period* 1900-1915.

| Year | Exports | | | | Imports | | | |
|---|---|---|---|---|---|---|---|---|
| | Butter | Cheese | Casein | Condensd sterilised, and powdered milk | Butter | Cheese | Condensed milk | Malted milk |
| | kg. | kg. | kg. | kg. | kg. | kg. | kg. | kg. |
| 1900 | 1 056 000 | 856 | — | — | — | 1 373 882 | — | — |
| 1901 | 1 051 000 | 1 349 | — | — | — | 1 411 222 | 28 213 | — |
| 1902 | 4 125 000 | 6 520 | 94 074 | — | 120 | 1 639 682 | 27 312 | — |
| 1903 | 5 330 000 | 3 869 | 319 614 | — | — | 1 129 364 | 31 555 | — |
| 1904 | 5 294 000 | 7 459 | 1 694 883 | 31 530 | — | 1 845 769 | 43 894 | — |
| 1905 | 5 393 000 | 2 452 | 3 020 000 | 8 275 | 180 | 1 920 790 | 58 793 | — |
| 1906 | 4 405 000 | 285 | 3 081 000 | — | — | 3 313 343 | 133 185 | 92 771 |
| 1907 | 3 035 000 | 950 | 2 035 000 | — | 514 | 3 295 688 | 175 228 | 113 076 |
| 1908 | 3 550 000 | 1 000 | 2 058 000 | — | 345 | 3 667 612 | 155 655 | 135 331 |
| 1909 | 3 993 000 | 0 | 2 775 000 | — | 35 050 | 4 030 057 | 268 359 | 171 044 |
| 1910 | 2 876 000 | 367 | 2 973 000 | — | — | 4 325 476 | 278 368 | 143 172 |
| 1911 | 1 396 000 | 518 | 2 169 000 | — | — | 4 919 437 | 344 605 | 207 245 |
| 1912 | 3 677 000 | 1 942 | 3 501 000 | — | — | 5 374 584 | 348 028 | 224 673 |
| 1913 | 3 784 000 | 7 342 | 3 446 000 | — | — | 5 045 040 | 437 042 | 177 578 |
| 1914 | 3 482 000 | 3 727 | 2 925 000 | — | — | 3 834 367 | 259 184 | 138 964 |
| 1915 | 4 623 000 | 6 053 | 2 608 000 | — | — | 3 313 059 | 208 008 | 90 144 |

II. — SANITARY INSPECTION OF MILK PRODUCTION AND BUTTER MAKING. — The sanitary inspection of milk, as organised in the great dairy in-

dustry countries, does not exist in Argentina. Some municipalities alone, such as those of Buenos Aires, Rosario, Mendoza and Cordoba, have introduced compulsory tuberculin inoculation in city cow sheds(" tambos ") ; but as only the municipality of Buenos Aires grants an indemnity for the animals lost through this practice, this inoculation causes great injury to cow keepers. The latter often attribute disease to the inoculation, and oppose the use of this preventive treatment. As regards rural cow sheds, tuberculin inoculation was imposed by the order of the 16th December 1889 and the additional decree of the 27th May 1901. These enactments were set aside by the General Direction of Health in consequence of a petition from the Argentine rural Society, as the manner in which they were applied was not in keeping with the precepts of hygiene. The general sanitary police regulations, approved by decree of November 1906, conferred on the livestock division of the Department of Agriculture the right of inspection in all that related to this branch of production. Articles 41 and 42 provide that all cow sheds where milk is produced and treated may be inspected by the above Division, for the purpose of sampling milk and subjecting it to bacteriological analysis. All the establishments in whose products the bacillus of tuberculosis has been found are compelled to pasteurise the milk sold or handled by them. Nevertheless, so far, this enactment has not been enforced.

On the initiative of Dr. Baldomero Sommer, the municipality of Buenos Aires in February 1910 enforced an order promulgated on the 13th December 1907, declaring " hygienisation " of milk intended for consumption in the city of Buenos Aires to be compulsory. The order gives the widest possible sense to this term " hygienisation ". It was cited by way of example to other towns at the international Refrigeration Congress held at Paris in 1908.

In Buenos Aires, the death rate for children below one year was,in 1889, 19.3 % of the children born viable ; in 1909 it had fallen to 9.9 %, which diminution the writer attributes to the hygienic control of infant food.

An order of the Direction of Health of La Plata inposes very strict supervision over factories of dairy products employing steam plant.

Cream is not subjected to any sanitary measure.

III. — Testing the Quality of Milk and Butter Making. — An inspection of this kind is only adopted by the municipalities of Buenos Aires and Rosario. The most frequent adulterations are watering and skimming. The Author mentions a curious method of effecting skimming when the milk is being delivered ; the milkman places a skimmer beneath the seat of his cart, the blades being driven by means of a belt which takes its movement from the wheels.

The decree of the 4th October 1904 provided inspection for butter manufacture and the " Comisión nacional de Lechería " in July 1905 submitted a scheme for regulations under this decree. It limits inspection to the factories of butter for exportation; the decree has never been enforced.

The absence of supervision of the quality of milk and of butter mak-

ing in Argentina are said to be a considerable hindrance to the progress of this industry.

IV. — ECONOMIC RESULTS OBTAINED BY THE DAIRY INDUSTRY IN THE ARGENTINE REPUBLIC. — According to official data, the cream and cheese yield of milk and the butter yield of cream are as follows, being the averages for the years 1903 and 1905-1907 :

| | |
|---|---|
| Cream yield of milk . . . . . | 7.25 % |
| Butter yield of cream . . . . . | 51.35 » |
| Cheese yield of milk . . . . . | 0 » |

The quantity of milk produced per cow is very variable. In urban cow-sheds it is 2.64 galls. per day or even more, and for some cows goes up to 4.4 galls. In rural cow-sheds it averages 1.3 to 1.5 gallons, but here too cows are found yielding 4.4 to 6.6 galls. According to M. LAHITTE (1903), the average production of the country is 0.77 galls. per dairy cow, with a butter yield of 3.5 %. On the whole the butter yield is good, but the milk yield is low. This disadvantage, however, is partly set off by the large number of cows available and the little attention required by dairy cows. The machines used are of the most improved types. The butter ranks fifth on the London market, after Danish, French, New Zealand and Dutch products; this is due to the length of time for which it is cold-stored in transit.

No form of co-operation in the dairy industry exists. The writer advises the installation of co-operative dairies in the distributive centres in order to reduce the costs of carriage by railway and taxes on dairies, while at the same time ensuring supervision of the quality of the products.

V. — CONSIDERATIONS ON THE DAIRY INDUSTRY AND DAIRY PRODUCTS IN CERTAIN COUNTRIES. — The writer studied this industry in Denmark, Holland and Siberia, and he arrives at the result that: 1) these countries owe their progress to co-operation, and Siberia also to Government action, which has enabled that country to gain within a space of ten years the second place in the world's output of butter; 2) the cattle stock of these countries is inconsiderable if compared with that of Argentina, which proves that it is not necessary to have a large number of cows in order to produce butter; 3) in Siberia, cows are badly fed and neglected from October to March, and drought is frequent. The writer notes this fact, because in some quarters the want of development of this industry in Argentina is attributed to insufficient feeding ; 4) in order to obtain 1 lb. of butter, there is required in Denmark 26.5 lb, of milk ; in Holland, 30; in Siberia 22 ; in Argentina 28.

VI. — INDUSTRIAL CAPACITY OF PROVINCES AND TERRITORIES IN ARGENTINA IN REFERENCE TO OUTPUT OF MILK AMD MILK PRODUCTS. — *Quantity of Livestock and Conditions of Environmment.* — In Table II particulars are given as to the number of farm properties with an area of more than 24 acres and the number of dairy cows " vacas de cría " (breeding cows) and other milk yielding animals (ewes, goats and camels) in the provinces and territories of the Republic.

Cheese-making finds favourable conditions in the region of the Andes and the territories of Pampa, Neuquén, Chubut, Río Negro, Santa Cruz and Tierra del Fuego, because cool animal housing quarters are available during the greater part of the year.

TABLE II. — *Distribution of Milk-yielding Animals in Argentina (Livestock Census of 1908).*

| | Farm properties over 24 acres | Dairy cows | Breeding cows | Sheep | Goats | Camels |
|---|---|---|---|---|---|---|
| *Provinces* | | | | | | |
| Buenos Aires | 45 023 | 656 640 | 4 491 588 | 21 109 609 | 11 335 | — |
| Santa Fé | 27 104 | 186 510 | 1 446 057 | 596 411 | 35 596 | — |
| Entre Rios | 13 893 | 203 800 | 1 533 524 | 3 936 902 | 31 748 | — |
| Corrientes | 10 394 | 206 165 | 2 388 052 | 1 805 745 | 29 978 | — |
| Santiago del Estero | 4 359 | 88 107 | 222 566 | 435 839 | 705 127 | — |
| Cordoba | 25 896 | 217 233 | 898 164 | 1 245 764 | 810 831 | — |
| Tucumán | 6 443 | 55 098 | 114 107 | 82 720 | 101 394 | — |
| Salta | 3 453 | 71 019 | 209 813 | 194 590 | 217 054 | 29 700 |
| Jujuy | 4 472 | 8 152 | 46 456 | 535 447 | 133 656 | 42 516 |
| Catamarca | 4 633 | 26 506 | 101 403 | 97 524 | 311 548 | 828 |
| Rioja | 3 146 | 59 873 | 163 140 | 77 281 | 359 811 | — |
| San Juan | 1 658 | 3 156 | 31 975 | 61 800 | 90 796 | — |
| San Luís | 5 485 | 59 876 | 224 399 | 535 447 | 468 216 | — |
| Mendoza | 2 325 | 22 968 | 142 774 | 187 526 | 205 427 | — |
| *Territories* | | | | | | |
| Chubut | — | 27 846 | 157 305 | 1 212 501 | — | — |
| Neuquén | — | 26 195 | 82 225 | 503 221 | 170 919 | — |
| Pampa | — | 24 465 | 205 057 | 3 005 807 | 113 161 | — |
| Río Negro | — | 25 025 | 128 420 | 3 140 466 | 76 698 | — |
| Santa Cruz | — | 1 639 | 10 075 | 1 371 324 | 582 964 | — |

*Feeding of Dairy Animals.* — In 1908 Argentina possessed 6 728 876 hectares of artificial grasslands, of which 4 656 707 ha. were under lucerne (an area exceeding that of Denmark,) and in addition the immense rich natural pasturages. It also exports many concentrates (bran, oil cakes, etc.). Consequently the production of cheese exceeds the quantity required for the country.

MEASURES CALCULATED TO PROMOTE THE PROGRESS OF THE DAIRY INDUSTRY. — The Author in this connection, reproduces the opinions of Messrs. GIBSON, LAHITTE, BERGÉS, FYNN and PEREZ. They are unanimous in think-

ing that co-operation must be developed and an immediate demand made for: 1) the reduction of the carriage rates and the provision of cold storage wagons in sufficient quantity (LAHITTE, BERGÈS and FYNN); 2) the abolition or reduction of taxes (LAHITTE, BERGÉS, FYNN AND PEREZ); 3) the inspection of milk intended for consumption (BERGÉS) and butter (LAHITTE, BERGÉS and PEREZ); 4) the sanitary inspection of cow-sheds (BERGÉS); 5) the foundation of practical schools for the dairy industry (LAHITTE and BERGÉS); 6) shows of animals and products (BERGÉS, FYNN, and PEREZ).

The writer is in favour of coopération and even of compulsory co-operation, as likewise of the establishment of mixed co-operative societies of producers and farmers. He studies in detail the question of the establishment of co-operative societies in each of the milk-producing provinces, with geographical maps of the latter; he also treats of the scientific, economic and legal bases for the "hygienisation" of milk, and concludes by setting out a draft law which embraces all his desiderata.

*Practical Results.* — The writer presented his essay in 1910 and from that date to 1916 he has secured: 1) the establishment in January 1911 of a dairy industry bureau in the General livestock Direction; 2) the promulgation on the 20th August 1915, of a law declaring the "hygienisation" of milk compulsory in every town with more than 10 000 inhabitants, and proposing the establishment of mixed co-operative societies; 3) the holding of a series of lectures the result of which was the creation of 5 supervising and inspecting societies, 2 of which in particular are in operation; 4) the promulgation of a decree under date of the 17th December 1915, which establishes national inspection of dairy products; 5) the publication by the Dairy Industry and Refrigeration Bureau of an edition of 20,000 copies of a booklet in which the dairy qualities of cattle are discussed; 6) the creation of educational provisions for the improvement of the dairy industry, in the faculty of medicine and veterinary science of Buenos Aires, and in a large number of schools of agriculture.

1022 - **Influence of Mechanical Milking with the "Omega" Milker on the Bacteriological Composition of Milk.** — BURRI R. and HOHL JOH., in *Landwirtschaftliches Jahrbuch der Schweiz*, XXXth year, Part 2, pp. 241-255. Berne, 1916.

The experimental Station of Berne-Liebefeld has carried out a series of experiments in mechanical milking with the "Omega" milker, with a view to determining not only the economic desirability of mechanical milking under the conditions peculiar to Switzerland, but also its influence on the milk production of cows (1) and that exerted on the bacteriological composition of the milk, as compared with hand milking.

The report submitted by the writers is preceded by a short bibliographical statement on the question, and gives in detail the results of the bacteriological analysis of samples of milk obtained under the following conditions:

1) Mechanical milking on the methods usually employed for cleaning the milking appliances;

(1) See *B.* 1913, N° 1073. (*Ed.*)

2) Hand milking on the methods generally practised ;

3) Mechanical milking, steam being used for cleaning the appliances under special laboratory conditions.

4) Mechanical milking, using hot solutions of caustic soda for cleaning the appliances under normal conditions in the cow-shed and without the use of steam ;

5) Hand milking with special methods of cleaning.

The results of the bacteriological analysis comprising the determination of the number of bacteria per cc., the presence of gas-producing bacteria of the group of *Bacterium coli,* and their behaviour under the fermentation test, led the writers to the following observations :

1) The quality of the milk as regard the species and number of the bacteria it contains, varies within much wider limits in mechanically milked than in the hand milked article, as an incomplete cleaning of the apparatus facilitates the accumulation of a large number of bacteria which, at the following milking, easily get into contact with the milk which is almost free from germs on leaving the teat. This deteriorates the keeping properties of the milk, and the latter must be regarded as of inferior quality both from the point of view of health and that of the dairy industry.

2) On the other hand, by using special methods to ensure the utmost cleanliness of mechanical milking appliances, there is obtained on this method a quality of milk which, with respect to purity and keeping properties and the number of bacteria it contains, answers all requirements ; it is superior to any hand milked product, on condition, of course, that the appliance is applied to a perfectly clean teat.

3) In order to obtain an equally high degree of purity with mechanical milking, it suffices to use a hot solution of 0.2 % strength of soda (47 to 50° C) when cleaning the appliances inside and out which the brush, flushing them out before and after with a jet of clean water.

4) In view of the facility with which mechanical milking may cause deterioration in the quality of milk when the above rules are not constantly and strictly, followed, it is desirable, both in the interests of hygiene and the dairy industry, that wherever the introduction of this method of milking is justified from the economic standpoint, it should only be entrusted to conscientious and trustworthy persons.

1023 – **A New Defect in Milk Caused by *Bacterium Lactis Aerogenes* Escherich.** — DUGGELI MAX, in *Zeitschrift für Gärungsphysiologie*, Vol. 5, No. 5, pp. 321-340. Leipzig, 1916.

The writer received for examination 2 samples of bottled milk suffering from a hitherto unknown and very pronounced defect, although the samples reached the laboratory only 48 and 60 hours after milking. They came from a model cow-house of 36 cows producing best quality milk, obtained and handled with the utmost cleanliness, afterwards filtered, cooled to 12-14°C and bottled for forwarding to the consumers. When the milk from this shed had been kept for some time, a bitter taste was observable, together with a typical rancid smell, especially noticeable when boiling the

milk ; and this fault became more strongly pronounced as the time of keeping was lengthened.

All atempts to discover the presence of bitter substances failed.

The ration of the cows was made up of good hay and crushed barley, not very fresh it is true, but of normal bacteriological composition. On studying the fresh milk of the 36 cows separately no result is obtained, but by keeping the different specimens of milk it was detected that the defect was due to one cow with a diseased teat, an old animal which had been in milk for a year and a half.

A thorough bacteriological study of the above 2 specimens of milk was made, all kinds of cultures being prepared. The writer succeeded in isolating a bacterium belonging to the group *Bacterium lactis aerogenes* Escherich, but differing from the stock form of *Aerogenes*, and he considers this to be the cause of the defect in question. It not only gives rise to abnormal smell and taste in the milk, but also possesses the property of making glucose bouillon very ropy. Furthermore, even in the presence of *Bacterium Güntheri* L. et N., it prevents the coagulation of the milk. On cultivating the bacterium producing the defect in question on lactose agar, the caracteristic taste and smell disappear, but they can be made to reappear in part by afterwards cultivating the bacterium in a suitable medium (decoction of teat substance).

1024 – **Manufacture and Composition of Bulgarian Cheeses.** — ZLATAROFF, A. S. (Communication of the Laboratory of the University of Sofia), in *Zeitschrift für Untersuchung der Nahrungs- und Genussmittel*, Vol. 31, No. 12, pp. 387-394. Münster i. W., June 15, 1916.

In Bulgaria, in addition to the cheeses peculiar to the country, foreign cheeses (Gruyère, Roquefort, Chester, etc.) are manufactured, but their production does not exceed 5 % of the total output. The bulk of the latter is made up of the specific cheeses of the country, " Bulgarian cheese " proper and " Kaschkawal ", which are described below.

1) *Bulgarian Cheese.* — Belongs to the group of ordinary white cheeses and the sub-group of salted soft cheeses ; it is prepared from ewe's milk, but in a few rare cases also from goat's and buffalo's milk. The milk is worked immediately after milking at a temperature of 30 to 35°C., often in very large quantities coming from entire mountain flocks. The milk after milking is passed hot through a cloth filter into large cans, and either natural rennet, or, according to recent practice, artificial trade rennet, is added. In these cans, which have wooden lids and are surrounded by a woollen cover to retain the heat, the renneted milk is allowed to remain 1 ½ to 3 hours according to the outside temperature. After that time the whole of the milk has curdled. The curd is thoroughly stirred up for some minutes, and then poured into a cloth filter to remove the whey. The cloth is hung up with its contents and the whey drained off, after which the curd is put into wooden moulds where it remains for 2 to 3 hours. After this operation, the curd is cut up into regular cubes of 15 to 20 cm. each side which are well salted and arranged in layers in wooden vessels. On each layer vine leaves are placed, and the whole is afterwards pressed down with a stone. The vessel is kept in a cool spot, the whey runs off from the pieces of cheese, and

after a time the whole of the cheese lies in a bath of whey, in which it ripens ; the duration of the process of ripening varies according to the cheese maker. On the market, cheeses of more or less advanced stage of ripening are found.

The finished cheese put on the market is completely white and is soft and friable. Its taste, slightly tart and piquant, varies according to the degree of ripening and the manner of keeping the finished product (whether kept on the mountain, in the valley or in town). The older the cheese the more it tends to take on a consistency resembling that of hard butter, so that it can be easily spread on bread. After keeping 6 to 8 months the cheese partly loses its taste ; if it is made with skim milk its taste is not so pleasant. This latter method is regarded as fraudulent, although there is no law prohibiting this cheese being sold as though made from full cream milk. A good cheese should never contain holes.

2) " *Kaschkawal* ". — This belongs to the group of cooked cheeses and the sub-group of solid and sour descriptions. The raw material (milk) is put through the same treatment as in the manufacture of ordinary Bulgarian cheese, but always consists of ewe's milk and never buffalo milk. After passing through the filter the mass of curd is wrapped in the cloth and the latter is twisted so as to wring out the whey ; to promote drainage the casein is also pressed by hand. These operations distinguish " Kaschkawal " manufacture from that of ordinary Bulgarian cheese. When the whey is drained off, the casein is put into wooden moulds, then thoroughly triturated between the fingers ; the cloth is twisted a second time and the curd once more pressed by hand to force out the rest of the whey.

For this secondary fermentation the curd, freed from the whey, must remain in the cloth for some days. If the weather is hot, the secondary fermentation takes from 3 to 5 hours ; if cold, 2 days. The process is judged according to the colour of the mass, which should be a light yellow, and the content of " eyes ", which must have a diameter amounting to 1 cm. If fermentation takes place slowly, owing to low outside temperature, whey is poured into the curd.

On completion of the secondary fermentation, the casein is cut up into long pieces of an average weight of 50 to 60 gr. which are placed in a water bath at 50-60°C.; they are left in this for 8 to 10 minutes and thoroughly kneaded by hand. The paste thus becomes spongy and is shaped into balls weighing 1, 2, 5 or 7 kg., which are placed in metal moulds; here they remain 3 to 5 days, cooling and solidifying.

When this operation is completed, the balls are taken out and salted, and kept in layers. The cheese should be salted every day for 10 to 25 days, and is then kept in a well ventilated spot. The cheese is stored for about 1 month until fermentation is completed.

" Kaschkawal " is found on the market under two names : " fresh " Kaschkawal which is offered for sale immediately after salting, and " old " Kaschkawal or the completely ripened article. The colour of Kaschkawal is light yellow ; the slightly tart flavour resembles that of original Gruyère ;

TABLE I. — *Composition of ordinary Cheese and of " Kaschkawal ".*

| Constituents | Ordinary cheese 20 samples | « Kaschkawal » fresh, 10 samples | « Kaschkawal » old, 17 samples |
|---|---|---|---|
| Water | 42.37 to 64.06 % | 38.90 to 44.90 % | 24.91 to 33.92 % |
| Proteins | 14.08 » 27.51 | 21.84 » 27.40 | 19.06 » 27.46 |
| Decomposition Products of proteins | 2.20 » 5.88 | 2.12 » 3.62 | 8.08 » 11.14 |
| Fatty substance | 9.75 » 25.10 | 22.88 » 28.12 | 27.05 » 34.03 |
| Total ash | 3.45 » 4.94 | 2.90 » 4.38 | 4.99 » 7.75 |
| Sodium chloride | 1.10 » 3.12 | 0.20 » 1.68 | 2.02 » 4.20 |
| Lactose, lactic acid, etc., by difference | 0.27 » 6.05 | — | — |

TABLE II. — *Modifications of the proteins in " Kaschkawal " in course of ripening.*

| Age of the cheese | Unaltered proteins | Water soluble protein |
|---|---|---|
| Fresh, on leaving the water bath | 31.08 % | 0 % |
| 3 days after leaving the water bath | 30.08 | 1.00 |
| 6 » » » » » » | 29.12 | 1.96 |
| 10 » » » » » » | 28.22 | 2.86 |
| 15 » » » » » » | 26.78 | 4.30 |
| 20 » » » » » » | 23.97 | 7.11 |
| 25 » » » » » » | 22.31 | 8.69 |
| 30 » » » » » » | 20.93 | 10.15 |
| 40 » » » » » » | 20.20 | 10.80 |
| 60 » » » » » » | 19.80 | 11.28 |

its consistency is very firm ; there are few holes or " eyes " in the body of the cheese (their diameter being 0.5 to 1 cm.).

The chemical composition of " Kaschkawal " was studied by the writer in the Laboratory of applied chemistry of the University of Sofia. Table I sums up the results of 27 analyses and shows that the composition of " Kaschkawal " generally resembles that of Dutch cheese.

The chemical composition of " Kaschkawal " was more thoroughly studied by determining the unconverted proteins and those which had become soluble in water, in reference to the different periods of ripening. These analyses (reproduced in Table II) were made in the uplands, where " Kasch

kawal" is generally manufactured, according to samples from one and the same piece of cheese. From them it may be concluded that the process of ripening first progresses with fair rapidity, then slows down, and ends after 40 days.

At the close of his work the writer gives some information as to the national importance of cheese-making in Bulgaria. Before the Balkan wars the total production was 22 to 25 million kilograms per year. The greater part of the cheese is consumed within the country. From 1907 to 1911, the exportation of ordinary Bulgarian cheese attained the following figures:

| Year | Quantity in kg. | Value in francs |
|---|---|---|
| 1911 | 1 087 775 kg. | 804 141 fr. |
| 1910 | 543 105 | 415 358 |
| 1909 | 620 312 | 493 439 |
| 1908 | 459 160 | 335 676 |
| 1907 | 704 539 | 548 627 |

It is chiefly exported to Turkey (Constantinople), but also in small quantities to Egypt and Greece.

The production of "Kaschkawal" is less extensive. In the five-year period preceding the Balkan war it amounted to about 5-6 million kilograms. "Kaschkawal" is made in specially equipped cheese factories.

From 1907 to 1911, exportation showed the following figures.

| Year | Quantity | Value |
|---|---|---|
| 1911 | 2 336 450 kg. | 3 119 293 fr. |
| 1910 | 2 673 450 | 3 278 501 |
| 1909 | 1 740 500 | 2 193 259 |
| 1908 | 2 083 114 | 2 449 317 |
| 1907 | 1 180 222 | 2 060 641 |

"Kaschkawal" is chiefly exported to Turkey, but small quantities also go to Egypt and Greece.

1025 – **Researches into the Content of Bacteria and Catalase in Hen's Eggs.** — RULLMANN, in *Centralblatt für Bakteriologie, Parasitenkunde und Infektionskrankheiten*, Vol. 45, No. 6-12, pp. 219-230. Jena, April 22, 1916.

These researches have demonstrated that in eggs free from bacteria catalase is an original substance. It occurs both in fresh and in preserved eggs. Its quantity, independently of the age of the eggs, varies from 0.5 cc. to 7.6 cc. per 10 cc. of substance.

In broken eggs, the quantity of catalase showed a reduction as early as 24 hours after breaking. In one case, however, it increased from 2.5 cc. to 5 cc.

The catalase contained in rotten eggs could not be determined by means of EIJKMAN's fermentation tube without having been diluted. The diluted

catalase was diminished during the first 6 days when kept in an ice safe, after which the amount remained stationary.

All the eggs, with the exception of those in process of putrefaction, were free from bacteria.

AGRICULTURAL PRODUCTS: PRESERVING, PACKING, TRANSPORT, TRADE

1026 – **Farmer's Elevators in Minnesota, United States of America.** — WELD L. D. H., in *The University of Minnesota, Agricultural Experiment Station*, Bulletin 152, pp. 1-24. University Farm, St. Paul, August 1915.

The movement which led to the establishment of farmer's elevators seems to have had its inception about 1890 in the State of Minnesota. Before that time, the grain trade (bulking, storage and forwarding) was in the hands of companies owning elevators along the railway lines (line elevator companies), having their principal office in towns such as Minneapolis and Chicago. At the outset, although these companies rendered great service to the grain trade, they showed themselves at times to be hard bargain drivers in their contracts with the growers from whom they bought the grain direct; they also forced prices up and down according to their interests. Although these practices were perhaps not so current as is generally supposed, farmers, having got wind of them, became distrustful of the state of things. They therefore combined to erect co-operative elevators, the number of which rapidly increased, to the detriment of the elevators belonging to non-agricultural Societies or Companies. In 1906 there were 1 199 Company elevators in Minnesota as against 151 farmer's elevators. In 1912, according to the Railroad and Warehouse Commission, these figures changed to 777 and 300 respectively. This Commission regarded as elevators belonging to farmers those which styled themselves farmer's elevators, though in reality many pass under that name without really belonging to farmers.

On the 1st January 1914, an enquiry was opened by virtue of a law passed in 1913 by the legislative body of Minnesota, authorising the University of Minnesota to collect annual reports on the cooperative movement. According to this enquiry, at the 1st January 1914 there were 270, and at the 1st January 1915, 278 elevators in respect of which farmers held more than 50 % of the shares. The total business turnover done by the 270 agricultural societies existing in 1914 and owning elevators may be estimated at $30 000 000; these societies sell about 30 % of the whole of the grain sold by the farmers of Minnesota.

The enquiry laid down the bases on which an elevator may be considered as "co-operative". The three essential points in co-operation are: the principle of the individual vote in resolutions (instead of the system of voting by which each member has a number of votes proportional to the shares he holds), limitation of the number of shares which may be held by one member, and distribution of profits rateably to the business transacted by the Society with each member. About one third of the Societies limit the interest paid on shares and distribute the profit balance in proportion to the business done by each partner. The interest paid on the shares ranges from 5 to 10 %. In other words, the rateable distribution of profit has not been that most commonly adopted, and where it has been adopted, the society generally pays a higher rate on shares than the current interest.

Consequently farmer's elevators are not, properly speaking, co-operative undertakings in the true sense of the word.

The dividends paid by the Societies are of course very variabl . In 1913-1914, the position of these establishments was very prosperous. Of the 161 Societies about which the writer possesses information, 64 paid no dividends (20 of them losing money), 66 paid a dividend below 10 %, 18 a dividend between 10 and 20 %, 8 between 20 and 30 %, and 5 a dividend exceeding 30 %.

The managers of farmer's elevators were, at the beginning, often much under-paid, which resulted in certain mishaps. At present the salaries of managers range from $60 to $165 per month, with an average of $90. The reports received for 1912-13 show that in those elevators which were losing money the manager's salaries were about $10 per month less than those of the managers of profit-earning elevators. The managers are, in the majority of cases (78.2 %), required to deposit security varying, according to the elevators, from 1 000 dollars to 25 000 dollars.

The writer next gives indications on the cost of handling grain in elevators which is variable according to the amount of business transacted, as appears from the following figures :

| | Number of bushels handled | Cost of handling per bushel (Cents) |
|---|---|---|
| from | 50 000 to 100 000 | 2.5 |
| ,, | 100 000 ,, 150 000 | 1.9 |
| ,, | 150 000 ,, 200 000 | 1.5 |
| ,, | 200 000 ,, 300 000 | 1.2 |
| ,, | 300 000 ,, 400 000 | 1.15 |

When farmers bulk their goods in their own elevators, they reduce the cost of handling, and therefore get higher prices for their grain. Probably farmer's elevators save those concerned about 1 000 000 dollars per annum in Minnesota.

The farmers utilise their elevators for the purchase of the different goods they need ; this business is of very great importance in Minnesota. In 1912-13 the purchases amounted to about 2 000 000 dollars, comprising coal, flour, food, etc. : 63 % of the elevators engaged in the purchase of coal, 41 % food, 40 % flour, 35 % binding string, 18 % seed, and 16 % salt. Business was also transacted relating to cement, agricultural implements, timber, fencing material (including iron wire fencing), and oil.

At the close, the Author gives advice as to the mode of organisation of a Society and a specimen of by-laws.

# PLANT DISEASES

## DISEASES NOT DUE TO PARASITES OR OF UNKNOWN ORIGIN.

1027 – **Researches as to Injuries caused by Lighting-gas to Plants.** — SORAUER PAUL., in *Zeitschrift für Pflanzenkrankheiten*, Vol. 26, No. 3-4, pp. 129-183. Stuttgart, June 1, 1916.

At the request of the Berlin Gas Works the writer made experiments, the results of which are set out in the present work, on the damage caused to plants by lighting-gas. These experiments were conducted in the large parks of Berlin, which proved well adapted for the purpose.

The writer proposed in the first place to ascertain by experiment the character of the toxic effects due to lighting-gas. Hitherto the blue colouring of the roots was regarded as a satisfactory indication, but these experiments have made it clear that this phenomenon often gives a misleading result. Systematic experiments were begun in the spring of 1913, with *Prunus Padus*, *Ulmus scabra*, *Carpinus Betulus*, *Viburnum Opulus*, *Quercus pedunculata*, *Ulmus campestris*, *Urtica dioica*, *Syringa vulgaris* and a large number of ornamental plants.

In all plants suffering with gas poisoning it was observed in the first place that the chlorophyll was attacked, disappearing little by little. The process of assimilation and the formation of new organic substances, in spite of the presence of all factors of growth, are impeded in soil permeated with lighting-gas, and the plant utilises its own substance for intramolecular respiration. These phenomena indicate the existence of a process of asphyxia through the want of oxygen in the roots. If lighting-gas effectively acts on the roots, the consequence of intramolecular respiration also appears on the overground parts of the plant. That is why those parts of the leaf which receive the least sap (edges of the leaf) are the first to show discoloration or disappearance of the chlorophyll, and also why the first signs of withering (appearance of dry spots and edgings) appear on the edges of the leaf.

With the drying of the periphery of the green organs, and the reduction of evaporation, an excess of water is observed as a consequence in the lower parts of the stalk and roots of the plant. This phenomenon is noticed at

the point where the parenchyma has the most powerful reaction, namely in the bark. The consequence is often wet rot and death of the base of the stalk This is the case of what is called " Lohkrankheit ", the cause of which is too large a supply of water through the roots.

Among the injuries caused to the leaves, the appearance of transparent spots rapidly spreading is characteristic in some large-leaved plants.

In an atmosphere of gas, transpiration falls off greatly for each gram of fresh substance. If the plants have an abundant amount of water at the time of reduction of the evaporation coefficient, a great accumulation of water takes place in the organs of transpiration. Under the influence of this accumulation it is observed in rapidly growing plants that the cells of the separation layer become gradually less coherent, and the result is the fall of the leaf (in *Fuchsia*, *Begonia* and *Azalea*). In *Taxus* and other trees, big lenticular swellings were observed on the roots in consequence of too large a water supply.

1028 - **Studies on " Dörrfleckenkrankheit " (Dry spot Disease) in Oats** (1). — SCHIKORRA W., in *Centralblatt für Bakteriologie, Parasitenkunde und Infektionskrankheiten*, Vol. 45, No. 18-25, pp. 578-586. Jena, June 19, 1916.

For the last two years it has been observed in Germany that growing trials of oats carried out in pots are liable to the appearance of a characteristic disease often producing death of the leaves. In 1913-14 the disease appeared to a limited extent only, not hindering the experiments, but such was not the case this year, the oats becoming diseased both in pots and in the open field ; therefore the causes of the disease had to be studied.

It was found to be the disease called " Dörrfleckenkrankheit " of oats by CLAUSEN-HEIDE ; it is distinguished by the fact that the leaves of the oats, after normal growth, show pale, greyish-yellow spots the tissues of which die, and the leaves break. The disease is known in Upper Bavaria under the name of " Haftersucht " and in Sweden under that of " Graufleckigkeit " of oats. The cause, according to NILSSON-EHLE, ERIKSSON, KRAUSE, etc. is *Scolecotrichum graminis*, but recent experiments have shown that typical " Dörrfleckenkrankheit " is a disease of the soil, often promoted by also manuring with artificial fertilisers.

The writer made experiments on the outbreak of the disease by studying the influence of manuring with artificial nitrogenous fertilisers : 5 experimental pots each containing 6 kg. of clayey-sandy soil were given a basal manure of 5.5 grms. of dipotassium phosphate, after which 0.5 gms. of nitrogen per pot was added. As nitrogenous manure there were used, by way of comparison with each other, pure nitrate of soda, sulphate of ammonia, urea, nitrate of urea, cyanamide, ammonium chloride, Rehmsdorf nitrogenous manure (organic nitrogenous manure), ammonium bicarbonate, and the double sulphate of ammonium and soda; 5 other pots received no nitrogenous manure and served as controls.

The observations made on the plants cultivated in these pots gave

(1) See also *B.* June 1914, No. 575 (*Ed.*)

a very different idea of the nature of the disease in each case. According to the degree of disease, the following results were obtained :

| | |
|---|---|
| Oats very badly attacked : | Rehmsdorf manure meal. |
| Oats badly attacked : | Nitrate of soda, urea, nitrate of urea, ammonium bicarbonate. |
| Oats clearly attacked : | Double sulphate of ammonia and soda, cyanamide, sulphate of ammonia. |
| Oats hardly attached at all : | Ammonium chloride. |

On adding 1 gram of nitrogen to the pots it was found that the nitrate of urea had given a better result than the nitrate of soda. According to the degree of the disease there is obtained :

| | |
|---|---|
| Oats very badly attacked : | Rehmsdorf manure meal, nitrate of soda. |
| Oats badly attacked : | Urea, ammonium bicarbonate. |
| Oats clearly attacked : | Nitrate of urea, cyanamide. |
| Oats weakly attacked : | Sulphate of ammonia, double sulphate of ammonia and soda. |
| Completely healthy oats : | Ammonium chloride. |

It will be seen from these facts that even the very best fertilisers may often be the most injurious to the plants.

The table of crops shows that the best yield was obtained through ammonium chloride, because it checked the progress of the disease, while the best nitrogenous manure, nitrate of soda, gave a less satisfactory result. It should be noted that at the beginning of growth, before the onset of the disease, the plants manured with ammonium chloride were not the best in appearance, but later on there was a change in this.

The writer has also studied the influence of various potassic and phosphatic manures and lime on the " Dörrfleckenkrankheit », by manuring pots with doses of these fertilisers. The experiments were continued for 5 consecutive years. They showed that a heavy lime manure had assisted the onset of the disease.

In another series of experiments the writer mixed the ordinary light soil of a field successively with marsh soil, marl, clay and straw, and then studied the relations between these additions and the outbreak of the disease.

On the plot which had received marsh soil the oats were most clearly attacked ; on those which had received marl and on the control plots the disease was not so strong ; on the plots which had been given straw manure the plants showed but few spots ; finally, on the plots which had received clay the plants were hardly attacked at all. These observations agree with those obtained by CLAUSEN, TACKE, HUDIG and ZIMMERMANN on ordinary sandy, marshy and clayey-silicious soil. It is difficult to give a precise explanation of this phenomenon, but probably the temperature of the soil plays a part, a high temperature being favourable to outbreak of the disease.

As regards the relations between artificial fertilisers and the appearance of the disease, the writer concludes that the disease is promoted by physio-

logically alkaline manures such as Chilean nitrate, basic slag and lime. It may therefore be controlled by manures with a physiologically acid reaction, such as ammonia, potash salts and superphosphate. This hypothesis is born out by the writer's experience of soils that are most favourable to the disease.

It is intended to continue the experiments.

1029 – **The Possibility of Recovery of the Slips of a Vine suffering from "Bramble-Leaf"** (1). — PANTANELLI E., in *Le Stazioni sperimentali italiane*, Vol. XLIX, Part 5-6, pp. 249-296. Modena, 1916.

Experiments carried out for the purpose of ascertaining:

1) Whether the wood taken from vines suffering with "Bramble-leaf (court-noué" or "roncet") produces in all cases plants and vines showing the same disease;

2) Whether vine plants affected with bramble-leaf can be cured by suitable treatment or under favourable conditions of growth;

3) Whether such recovery is real and durable or apparent and transitory.

In the course of these experiments the following facts were brought to light:

Slips taken from vines affected with this disease and planted in any soil began their spring growth by forming buds which exhibited bramble-leaf.

The disease of the shoots, slips or plants consisted mostly in deformation of the leaves (laciniation, twisting of the toothed edges, spotting in the case of Riparia and Rupestris, asymmetry and formation of blisters on the leaves in Berlandieri) and in a strongly pronounced internodal distortion of the branches. In the spring, above all in the case of Rupestris, Riparia, 420 A, the leaves showed pale or blackish spots, but never to the same extent as in the parent vines suffering with mosaic bramble-leaf. Leaves which had grown from the month of May onwards, although deformed, were generally without these spots, which sometimes reappeared on the last leaves the growth of which had taken place at the end of autumn (November-December): they then also appeared on some of the last leaves of plants remaining healthy in appearance. These symptoms are identical with those produced by rapid falls of temperature during the formation of the buds.

The slips taken from vines attacked by bramble-leaf often recover in the course of growth; precisely the same thing, for that matter, is observed in the parent vines, that is to say, after a first stunted development the branches form internodes which grow continually longer and end by being of normal form; the leaves were less and less deformed and their shape and dimensions at last became normal.

It is a rare thing for slips taken from vines suffering with bramble-leaf not to have stunted buds suffering from the disease at the outset. When this case did occur, especially in Berlandieri and its hybrids as well as the European-American crosses, it is explained by the fact that the slip has been taken from the non-diseased tip of a branch.

(1) See also *B.* July 1914, No. 684. (*Ed.*)

As a general rule, the disease is reproduced on the first buds of the slip, with the same intensity and the same appearance as it had exhibited in the previous year on the corresponding leaves and the internodes of the branch of the parent vine.

Furthermore, the experiments described in this work have brought out a number of shades and gradations of this phenomenon of preservation of bramble-leaf in the layer-slips so much so as to point to the possibility of an effective, slow and gradual cure of plants taken from diseased vines.

The slips of the Berlandieri and their hybrids, the European-American hybrids and Riparia, above all, recovered more rapidly during the summer than the slips of Rupestris, and among the latter varieties the most liable to the disease are the most difficult to cure. For instance, the proportion of plants which recovered in summer, all conditions of soil and rearing being equal, is less in the case of the varieties of Rupestris du Lot than of Rupestris metallica.

Furthermore, the more readily the diseased slips take root in a given soil, the more easily they recover. The recovery which occurs in summer is proportional to the root growth, in respect both to the number and thickness of the roots put forth by the slip. It follows rather than precedes the production of root apparatus sufficing for the needs of the aerial portion. The question involved therefore is that of an abundance of roots relatively to the size of the slip. For instance, a plant with fine stalk recovers in summer even if it has only few roots, while a slip as thick as those often taken at the base of branches, needs the growth of numerous roots before equilibrium is established between the demands of the foliage and the potentialities of the absorption apparatus.

Whatever the factor influencing the production of roots, it also influences the recovery of the diseased branches in summer. Thus the treatment of the slips with different baths at the time of planting very much facilitated their recovery, not owing to any disinfecting action, but because some of the substances applied stimulated exchanges favourable to a greater root production. In 1907 the best results were obtained with ferrous sulphate, phenol and hot water; in 1908, with phenol, ferrous sulphate and hot water; in 1909, with formalin, phenol, acids and hot water; in 1910, with ferrous sulphate, sulphuric acid and lysol.

The difference observed between the behaviour of diseased slips planted on propagation beds already partly exhausted by use and those planted on beds which had been fallowed, was still more interesting. In the latter case the diseased slips at once formed a strong root system, while in partly used up soil the diseased slips struck root very poorly, and in summer there was little or no recovery.

The writer has made trials of different crops with a view to finding out which is most adapted to rest the fatigued soil for the purpose of vine-growing; leguminosae contributed largely to better rooting of the slips, and on the beds where bean ensilage had been carried out the proportion of recoveries in summer was usually found to be higher.

| | Exhausted propagation bed | | | | Fallowed propagation bed | | | |
|---|---|---|---|---|---|---|---|---|
| | Slips planted (diseased) | Branches healthy | Branches cured | Branches diseased | Slips planted (diseased) | Branches healthy | Branches cured | Branches diseased |
| Rupestris du Lot . . . | 2 000 | 0 | 395 | 276 | 1 000 | 48 | 213 | 126 |
| » metallica . . | 1 000 | 45 | 229 | 136 | » | 86 | 294 | 48 |
| Riparia Gloire . . . . | » | 40 | 289 | 143 | » | 123 | 338 | 27 |
| 3309 . . . . . | » | 65 | 194 | 115 | » | 158 | 282 | 36 |
| Aramon × Rup. G . . . | » | 72 | 234 | 179 | » | 163 | 396 | 62 |
| Berlandieri R. 1. . . . | » | 0 | 0 | 10 | » | 20 | 39 | 13 |
| » » 2. . . . | » | 3 | 44 | 42 | » | 37 | 129 | 17 |
| 420 A . . . . . | » | 0 | 18 | 27 | » | 49 | 246 | 20 |
| 1737 . . . . . | 800 | 22 | 108 | 124 | » | 73 | 348 | 42 |

It remains to be seen whether this recovery taking place in the summer is only temporary, or whether in reality the vines infested with bramble-leaf tend to recover in the course of time; 200 affected slips of Rupestris du Lot taken from the nursery bed of Noto (Sicily), were planted in 1909 at Trobaso, near Lake Maggiore, in a soil which had before been put down to vine. In the spring of 1909 there were rather frequent late frosts there, and the already developed and barely opened buds remained covered with snow for a week. The first shoots which came out were very much curled, but in the summer the branches recovered completely. In the following year, 1910. the spring buds were still slightly deformed, but the vines showed vigorous growth in the summer. In 1912 not the slightest trace of bramble-leaf could be discovered any longer, and the growth was extremely vigorous.

This result would seem to prove that slips suffering with "court-noué," even those of the most sensitive stock, such as Rupestris du Lot, can recover from this disease in a few years if placed under conditions entirely favourable to their taking root.

## DISEASES DUE TO FUNGI, BACTERIA AND OTHER LOWER PLANTS.

1030 – **New Species of Parasitic Fungi discovered in Canada.** — DEARNESS JOHN., in *Mycologia*, Vol. VIII, No. 2, pp. 98-107. Lancaster, Pa., 1916. GENERALITIES.

Among the species described the following deserve particular mention:

1) *Placosphaeria cornicola* n. sp., on the living leaves of *Cornus Nuttallii* Aud., in the island of Vancouver (British Columbia), September 1914; the diseased parts take on a bright red and afterwards a yellow colour while many black stromata appear and tend to run together; 2) *Cytodiplospora*

*parallela* n. sp., on *Acer nigrum* Michx., at Byron (Ontario), October-November 1903; stromata containing 5 to 15 pycnidia, scattered irregularly or arranged in more or less continuous parallel lines; 3) *Ascochyta Achlydis* n. sp., on *Achlys triphylla* D. C., in the island of Vancouver, 9th June 1915; on the leaves attacked spots are observed, some of which are small in size (2 mm.); others, fewer in number, are 1 cm. in diameter and have a dark red border; 4) *Diplodia Nuttalliae* n. sp. on *Nuttallia cerasiformis* Tovr. and Gr., at Victoria (British Columbia), April 1915; the pycnidia are placed round the lenticels, which likewise serve as a passage for the parasite; 5) *Septoria adenocaulonis* n. sp., on leaves of *Adenocaulon bicolor* Hook, in British Columbia, May 1915; 6) *S. angularis* Dearness and Bartholomew n. sp., on leaves of *Solidago latifolia* L. at Komoka (Ontario), June 1913; 7) *S. lupincola* n. sp., on leaves of *Lupinus perennis* L., at Oakland, near London (Ontario), July 1915; 8) *S. sanguinea* n. sp., on *Ribes sanguineum* Pursh, in British Columbia, September 1912; 9) *S. Macrosporia* n. sp., on *Chrysanthemum Leucanthemum*, at London, October 1915; 10) *Leptostromella conigena* n. sp., on cones of *Picea Abies* (L.) Karst., at London, April 1915; 11) *Melanconium parvulum* Dearness and Bartholomew n. sp., on dead branches of *Betula populifolia* Marsh, along the south-eastern shores of Lake Huron (Ontario), May 1912.

Further mention is made of *Cylindrosporium Crataegi* Ellis and Ev., on leaves of *Crataegus brevispina* in British Columbia, September 1914; *C. Toxicodendri* (Curtis) Ellis and Ev. on living leaves of *Rhus Toxicodendron*, etc.; *Ramularia Lapsanae* (Desm.) Sacc., on *Lapsana communis* L. at Elgra (Ontario), July 1915, etc.

MEANS OF PREVENTION AND CONTROL

1031 – **Seed Sifting as a Means of Controlling Fungous Diseases.** — HENNING ERNEST., in *Kungl. Landtbruks-Akademiens Handlingar och Tidskrift*, Lth. Year, No. 4, pp. 282-300. Stockholm, 1916.

According to ZIMMERMANN, the mycelia of certain parasitic fungi may retain their vitality for five years in the seeds of grass plants. The writer had satisfied himself a long time ago that the appearance of *Ustilago Tritici* was clearly related to the time and conditions of flowering. While it occurs very rarely on *Hordeum distichum erectum*, with close ear, which during the phase of fertilisation keeps its flowers entirely enclosed in the glumes, it is on the other hand very frequent in *H. distichum nutans*, with loose ear and in which at the time of fertilisation the flowers at the tip and sometimes those at the base of the inflorescence open. At that moment, the numerous spores of *Ustilago* carried by the wind penetrate the floral organs, grow and take up their abode in the mass of the grain. For loose-eared varieties of barley therefore it would be desirable to remove these infected grains at the time of sowing. A feature by which they may be distinguished is their size. The grains inserted at the tip and at the base of the inflorescence are distinguished by smaller bulk, and between the bulk of the grains and the percentage of infected plants, as the Author was able to prove by many experiments, the following inverse ratio exists:

(*Ustilago nuda*).

| | | | | | |
|---|---|---|---|---|---|
| Length of grains in mm. | 2.0 | 2.25 | 2.50 | 2.75 | 3.0 |
| Percentage of infected plants | 3.2 % | 4.6 % | 1.9 % | 1 % | 0.1 |

The choice of bulky grains also allows of reducing the number of plants infested with *Helminthosporium graminicum*, as results from the following data:

| | | | | | |
|---|---|---|---|---|---|
| Length of grains in mm. | 2.0 | 2.25 | 2.50 | 2.75 | 3.0 |
| Percentage of infected plants | 42.5 % | 43.2 % | 35.6 % | 23.1 % | 13.3 % |

Experiments conducted at Ultuna have shown that oat plants grown from small seeds are more liable to attack by *Puccinia graminis*.

From the foregoing it follows that the sifting of seed may in many cases furnish a method calculated, not perhaps to get rid completely of the germs of certain diseases, but at any rate to diminish to a notable extent the percentage of infected plants.

1032 - **Economic Data relating to the Treatment of Potatoes with Bordeaux Mixture against *Alternaria Solani*.** — See No. 1014 of this *Bulletin*.

1033 - ***Diplodia Zeae*, the Cause of Dry Rot in Maize.** — VAN DER BIJL PAUL A., in *Union of South Africa, Department of Agriculture, Division of Botany and Plant Pathology, Science Bulletin* No. 7, pp. 1-60, Pl. 1-15. Pretoria, 1916. DISEASES OF VARIOUS CROPS

The disease known by the name of "dry rot" in maize is produced by the fungus *Diplodia Zeae* (Schw.) Lev., reported so far in Europe, America, Australia, and at various points in South Africa.

One of the most conspicuous symptoms of the disease is the appearance of a dense growth of whitish mycelium, which develops in the furrows between the caryopses, makes its way to the centre of the bracts, surrounds the filamentous stigmata and forces them against the internal face of the bracts — which become discoloured, — and afterwards forms round the ear a large dry envelope, formed by the hyphae of the fungus.

The caryopses of the diseased ears are stunted and light in weight, dark in colour, and are easily detached. The colourless segmented hyphae, of a breadth of from 1.15 to 3.08 μ are not capable of perforating the cell partitions, but they generate into the interstices of the cells and vessels through the areolae. The mycelium in itself is not distinguished from other fungi (*Fusarium* spp.) parasitic on maize. On the other hand, a characteristic of the genus *Diplodia* is the small black pycnidia which usually grow on the edge of the alveolae, as may easily be seen on breaking the diseased ear across. They are however also found embedded in the mycelium on the caryopses and bracts, and sometimes even in the culm, near the nodes or at a point corresponding to some lesion.

The shape and size of the pycnidia vary greatly; they may be pear-shaped (from 187.5 to 337.5 μ), ellipsoid (150 × 330 μ), spherical or spheroidal (from 200 to 275 μ). The wall of the pycnidium is formed of two layers of cells, and on its internal face grow the hymenium and the spores, bilocular (rarely trilocular), straight or slightly curved, cylindrical, brownish-black

and of variable dimensions: 19.8 — 33 × 4.95 — 6.6 μ. The conidiophores are unicellular, colourless, with rich content of protoplasm and measure 6.16 — 10.75 × 1.54 — 1.55 μ. The spores are of low resistance power, and although they are able to pass through the alimentary canal of animals without undergoing apparent deterioration, their vitality is nevertheless greatly impaired; exposure to the sun delays their germination; the germination capacity dies out entirely in spores one year old. The writer has studied the growth of spores under anaerobic conditions, with various degrees of alkalinity and acidity, after exposing them for 2 hours to the action of freezing mixtures. In plain agar the fungus grows little. On the other hand, if a little oat flour is added to the agar a rich growth occurs. Among the fungicides examined the best results were obtained with lithium salts, which stop the growth of the mycelium and prevent the germination of the spores.

As means of control against dry rot it is advised: 1) to remove from the fields and destroy by fire all vegetable residue which, if left there, would become centres of infection; 2) to discontinue maize-growing for some years in the infected zones, and also in the adjoining fields.

As was stated above, the diseased caryopses are distinguished by their light weight which is brought out clearly by the following table:

| | Weight of ear without bracts | | Length of ear | | Weight of caryopses | | Weight of rachis | |
|---|---|---|---|---|---|---|---|---|
| | healthy | inoculated | healthy | inoculated | healthy | inoculated | healthy | inoculated |
| | g | g | cm | cm | g | g | g | g |
| 1 | 252 | 154 | 19 | 18 | 210 | 96 | 42 | 56 |
| 2 | 294 | 252 | 19.5 | 23 | 224 | 162 | 84 | 70 |
| 3 | 224 | 196 | 18.5 | 18.5 | 168 | 154 | 70 | 42 |
| 4 | 238 | 182 | 19 | 19 | 196 | 140 | 84 | 42 |
| 5 | 238 | 196 | 18.5 | 17 | 182 | 140 | 56 | 56 |
| 6 | 322 | 252 | 20.5 | 21.5 | 252 | 196 | 70 | 56 |
| 7 | 392 | 294 | 23 | 22 | 308 | 224 | 84 | 70 |
| 8 | 336 | 210 | 21.5 | 23.5 | 266 | 196 | 56 | 42 |
| Average per ear | 287 | 217 | 19.687 | 20.312 | 225.75 | 163.5 | 66.25 | 54.25 |

The average loss of weight of the caryopses is therefore 27.8 %, and, in serious cases, it may even amount to 50 %.

The alteration of the grains is due largely to the action of a diastatic enzyme secreted by the mycelium of *Diplodia*, which attacks and destroys the embryo and the starch grains.

Another enzyme afterwards separates the fatty substances, which accounts for the reduction in the fat content in the infected maize. When fed to livestock the latter does not cause any poisoning but the deterioration in its composition really does not make it a food to be recommended.

1034 - **Researches on the Silver-scurf Disease (*Spondylocladium atrovirens*) of the Potato** (1). — SCHULTZ S. EUGÈNE, in *Journal of Agricultural Research*, Vol. VI, No. 10, pp. 339-350. Pl. XLV-XLVIII. Washington, D. C., 1916.

The researches made in connection with the potato disease known as "silver scurf", and caused by *Spondylocladium atrovirens* Harz., show that in spite of the great differences in the size of the spores (which had led some writers to assume the existence of two different species, with macrospores and microspores), there really exists only a single species. This follows clearly from the fact that by cultivation in pure lines (namely, from a single spore) conidia are obtained measuring from 18 to 64 μ. *S. atrovirens* exhibits a negative heliotropism, which does not materially affect the development and appearance of the infection.

In agar cultures the conidia and mycelium withstand the most intense desiccation without being affected. The thermal optimum lies between 21° and 27°, the maximum amounts to 30° C ; as regards the minimum, growth ceases at 2°-3° C, death only occurs at — 10° C.

Neutral or slightly acid media are thus apparently most adapted to bring about the growth of the fungus. The presence of 5 per cent of saccharose in the agar prevents the formation of the spores.

The parasite enters the tubers through the lenticels, and its mycelium over-runs the epidermis and the more superficial layers of the bark, which it breaks up, producing lesions of various kinds. The epithelium breaks away in the form of silvery scales (" silver-scurf ") The nutritive value of the potatoes is not diminished, but their marketable value is very much depreciated.

The infested potatoes readily carry the disease from one place to another, and in the same locality they carry it over from one season to another ; the mycelium, the conidia and sclerotia retain their vitality for a long time, and as soon as the degree of humidity and temperature allow, they grow and develop rapidly.

As active means of preventing the spread of the disease the following are advised : 1) treating the infected tubers with a hot solution of 1 % mercuric chloride ; 2) maintaining a very low temperature in the places of storage ; 3) discarding even slightly infected potatoes when sowing.

1035 - **Tobacco Diseases and Pests in Eastern Java.** — See No. 967 of this *Bulletin*.

1036 - ***Diplodia* sp., a Melon Disease in the United States.** — MEIER F. C., in *Journal of Agricultural Research*, Vol. VI, No. 4, pp. 149-152, Pl. XVII. Washington, D. C., 1915.

According to the facts reported in this preliminary notice, fruit dealers in the United States have in the past few years had heavy losses in consequence of a disease attacking melons (*Citrullus vulgaris*) in railway trucks and sometimes destroying a large part of the goods or rendering them unsaleable before they reach their destination.

The first symptom of the disease is a slight discolouration of the rind, which starts at the stalk and finally involves almost the entire surface of

(1) See also *B.* Sept. 1913, No. 1105 and *B.* Nov. 1914, No. 1070. (*Ed.*)

the fruit. The tissue of the rind then softens and shrinks, the pulp becoming black and gelatinous.

The writer was able to isolate and cultivate the pathogenic agent. It consists of a species as yet unidentified, belonging to the genus *Diplodia*; the diagnosis was confirmed by the entirely positive results of a series of artificial inoculations.

The fungus has separate or adjacent pycnidia, which may or may not be covered with a network of hyphae from 180 to 250 μ in diameter; the spores are oval, 24-30 × 10-14 μ, brownish-black and segmented. In the matter extracted from artificially inoculated melons the presence of paraphyses was not observed; the latter developed on cultivating the fungus on cylinders of potato.

In the United States the principal crops attacked by *Diplodia* are the sweet potato, *Citrus* fruits, maize and the cotton tree. As, in the South, cotton fields, sweet potato and melon fields are not separated from each other, it was of interest from the economic point of view to ascertain whether a species of *Diplodia* found on the one host is capable of development on another also. Experiments in this direction yielded positive results: a culture of *D. tubericola* E. et E., inoculated into healthy melons produced a series of symptoms identical with those described above.

1037 – ***Sclerotinia libertiana*, a Disease of Citrus and Other Plants Cultivated in California.** — SMITH O. CLAYTON, in *Phytopathology*, Vol. 6, No. 3, pp. 268-278. Fig. 5, Baltimore, Md., 1916.

The citrus disease known under the name of "white mould" or "cottony rot" is very frequent in California, in storage places of citrus fruits during the period January to March. Besides the fruits of the lemon tree, it also attacks the small branches of orange trees and lemon trees in the plantation, and likewise, but more rarely, the flowers of the lemon tree. The pathogenic agent is supposed to be *Sclerotinia Libertiana* Fuckel. The pathological changes observed on the fruits is characterised externally by an abundant white growth of mycelium of cottony appearance, and internally by a progressive softening which converts the tissues into a soft mass. The disease spreads rapidly, and all the lemons contained in one case are soon infested, and form a dangerous centre of infection in the store house. The bark of the small branches of the plants growing in the open air or under glass becomes ashy in colour and fibrous in consistency, and gum exudes plentifully all around the infected plant. *Scl. Libertiana* can likewise develop in the flowers, where excellent conditions are available in the thick mass of the petals at the beginning of flowering.

This fungus not only attacks *Citrus* spp. but also the flowers of the apricot, the small branches of the alligator pear tree (*Persea gratissima*), cucumber, tomatoes, vetches, lettuce, nettles, egg-plants, etc.

The practice prevailing in California of sowing vetches in citrus plantations must have contributed greatly to the spread of the disease.

It is also easy to produce artificial infection of the disease on lemons in a wet environment, by means of applications or inoculations of mycelium, sclerotia, spores or fragments of apothecia of the fungus. In this respect

the results were always positive, even when substances of different source and origin were used, isolated in several parts of the United States from the different hosts of the parasite.

Cultures of lucerne affected with *Scl. Trifoliorum* also causes rotting of the fruits of the lemon tree, which, however, instead of turning straw yellow as in the other cases, assumed a nut-brown colour.

As means of control it is advised to wash the citrus fruits with an 0.02 per cent. solution of sulphate of copper.

1038 - **Black Rot of the Vine (*Guignardia Bidwellii*) Attacking *Vitis rotundifolia* and *V. Munsoniana* (Muscadine Grapes) in the United States of America.** — See No. 087 of this *Bulletin*.

1039 - ***Hypoderma deformans* n. sp., Attacking the Leaves of *Pinus ponderosa* in the United States and Canada.** — WEIR JAMES R., in *Journal of Agricultural Research*, Vol. VI, No. 8, pp. 277-288, Fig. 1-4, Pl. XXXII. Washington, D. C., 1916.

The writer describes as a new species, under the name of *Hypoderma deformans* n. sp., a fungus which attacks the leaves of *Pinus ponderosa* Laws. in several parts of the United States and Canada : Montana, Oregon, Idaho, Washington and British Columbia.

The black, glossy apothecia, 10 mm. in length and about 1 mm. in width, may develop in the form of a continuous or broken band over the entire length of the leaf; the asci are spindle-shaped, the spores olive green in colour, transparent, slightly curved, with blunted tip, and have a septum on reaching maturity ; the paraphyses are numerous and thread-like, slightly swollen at the tip.

The end of the infected leaves turns yellowish brown, and this change spreads more or less rapidly throughout the leaf until the final appearance of the apothecia. The exact length of time between the first symptoms of the disease and the ripening of the apothecia varies greatly, being sometimes April-May to November ; it is occasionally prolonged until the following spring. The apothecia may contain asci in all stages of development, so as to produce ripe spores continually. The period of most intense spore formation, however, is found to be in May and June, when rains are frequent and when the plants have attained their maximum active growth. The leaves attacked end by withering completely and falling, which causes many troubles and changes in the growth of the buds. One of the most conspicuous phenomena consists of the appearance of very large "witch's brooms" of a diameter of 1-2 yds and a weight exceeding one cwt. The formation of these witch's brooms had been erroneously attributed to *Razoumofskya campylopoda* (Engelm.) Piper ("yellow-pine mistletoe"), but they are certainly connected with the presence of *Hypoderma deformans*. The branches thus deformed are generally sterile.

The disease not only attacks plants which have already attained a certain growth, but also young nursery plants, causing the death of the latter when the attack is very severe.

## WEEDS AND PARASITIC FLOWERING PLANTS.

1040 – **"Witch Weed" or "Rooi-Bloem" (*Striga lutea*), a Phanerogam parasitic on Maize in Rhodesia.** — WALTER J. A. T., in *The Rhodesia Agricultural Journal*, Vol. XIII, No. 2, pp. 234-236. Salisbury, 1916.

The appearance of "witch weed" or "rooi bloem" (*Striga lutea*) has been reported in the valley of Mazoe ; its occurrence is recognised by the scarlet colour of the inflorescence and the reduction in the foliage. It attaches its roots to those of maize and deprives its host of a considerable quantity of sap, hindering its growth and sometimes preventing the formation of the ear.

*S. lutea* spreads rapidly, and is capable of destroying within a short time, throughout entire districts, the crop of maize, this being the only cultivated plant which is the host of the parasite. In consequence of this fact control experiments were carried out by means of appropriate rotations, but the result of these trials was negative, owing to the persistence of the *Striga* seeds, which are capable of retaining their vitality for many years in the soil.

The only practical remedy is to pull up the *Striga* plants and destroy them by fire as soon as they appear on the surface of the soil.

1041 – **Khaki Weed (*Alternanthera Achyrantha*) in Queensland.** — BAILEY J. F. and WHITE C. T., in *Queensland Agricultural Journal*, New Series, Vol. V, 5th Part, pp. 277-278, Fig. 1. Brisbane, 1916.

A description of the "Khaki weed" (*Alternanthera achyrantha* R. Br.). It was imported from Argentina to Africa in forage during the Boer war. It was introduced into Australia, first invading New South Wales and afterwards extending to Queensland.

1042 – **Cut-leaved Nightshade (*Solanum triflorum* Nut.) and London Rocket (*Sisymbrium Irio*). New Weeds in New South Wales.** — HAMILTON A. A., in *Agricultural Gazette of New South Wales*, Vol. XXVII, 4th Part, pp. 275-276. Sydney, 1916.

"Cut-leaved nightshade" (*Solanum triflorum* Nut.) a solanaceous plant reported in the district of Cooma. The berries and overground parts of the plant, which contain solanine, are poisonous.

"London Rocket" (*Sisymbrium Irio* L.) a crucifer met with in the environs of Cobar and Nyngan. The plant was probably introduced with lucerne seeds. It has no injurious properties, but in view of the rapidity and intensity with which it spreads in lucerne fields, replacing the crop, *S. Irio* is regarded as a weed.

1043 – ***Agrostemma githago* among Cereal Grains : Determining the Coefficient of Impurity.** — See No. 968 of this *Bulletin*.

## INJURIOUS INSECTS AND OTHER LOWER ANIMALS.

MEANS OF PREVENTION AND CONTROL

1044 – **Experiments in Locust Control by Means of *Coccobacillus acridiorum* in Argentina** (1). — KRAUS RUDOLF, in *Centralblatt für Bakteriologie, Parasitenkunde und Infektionskrankheiten*, Vol. 45, No. 18-25, pp. 594-599. Jena, June 19, 1916.

The writer first gives a description of *Coccobacillus Acridiorum* discovered by FELIX D'HÉRELLE in Mexico in 1909. He then refers to the control experiments conducted by D'HÉRELLE himself in Mexico, and finally he mentions the observations made on this bacterium in Colombia, South Africa and Argentina.

In Argentina, the Ministry of Agriculture has appointed a Commission, of which the Author is a member, the object of which was to repeat the experiments of D'HÉRELLE and draw up a detailed report on the results obtained. The Commission had at its disposal cultures coming direct from the Pasteur Institute and which, according to bacteriological investigations, corresponded perfectly to the *Coccobacillus* of D'HÉRELLE.

D'HÉRELLE described this *Coccobacillus* as a micro-organism having few typical characters. For that reason the Author thought it necessary to determine in the first place whether in the intestine of locusts there are no micro-organisms resembling the *Coccobacillus* of D'HÈRELLE. He was able to isolate from the intestine of the healthy insect organisms which are morphologically identical with the *Coccobacillus*, which led him to suppose that this latter is usually present the intestine of the locust.

For the purpose of successful control of locusts in the open field, a virulent culture is required, according to D'HÉRELLE, who says that before beginning the experiment the virulence must be checked to see whether it is sufficiently effective. Unfortunately no criterion of virulence is indicated.

He only says that 12 passages through locusts are sufficient to give the cultures the necessary virulence.

The virulence was determined by the writer by means of a normal loop. The culture used first had a virulence of 1/200 loop, and later, after passing through the locusts, a virulence of 1/2000 loop. The virulence of this culture remains unchanged for a long time. The writer not only increased the virulence of the *Coccobacillus* of D'HERELLE, but also found that the same effect may be equally well obtained in relation to the micro-organisms isolated from the intestine of locusts.

After checking the virulence the Author made experimental infection with *Coccobacillus* in the laboratory, giving infected foods to the locusts. Contrary to the observations of other experimenters, he ascertained that these insects, even in captivity, will take fairly large quantities of food. The experiments, however, were negative in result, even when large rations of infected food were given.

(1) See also *B.* April 1913, No. 750. (*Ed.*)

The writer next made experiments in the open field with young insects. With this object he selected localities liable to invasion and distinguished by good climate and abundant herbage. For the purposes of the experiments the plots were surrounded by a zinc band, as is done for mechanical methods of control. The bacterial culture was spread over several plots containing young locusts, but without success. In no case was any endemic destruction of the insects observed in consequence of the treatment. Even in one case where 200 insects afterwards placed on the plot were artificially infected, the results obtained were negative.

The writer draws the following conclusions :

1) It is not possible to produce in the open field the epidemic infection and the death of young locusts by spraying with a culture of *Coccobacillus* the virulence of which has been increased by successive passages;

2) It may thus be concluded that this *Coccobacillus* is a normal inhabitant of the intestine of healthy locusts, and that it only kills the latter when injected into the abdominal cavity;

3) By administering this bacterium to young locusts with food, no infection is obtained.

1045 – ***Spicaria Cossus* n. sp., a Hyphomycete isolated from the Larva of "Cossus Rongebois" (*Cossus Cossus*).** — PORTIER PAUL and SARTORY, in *Comptes rendus des séances de la Société de Biologie*, Vol. LXXIX, No. 14, pp. 700-701, Fig. Paris, July 22, 1916.

In nature, beneath the bark of various trees there are often found in the larval tunnels, mummified larvae of *Cossus cossus* (1) invaded by a pinkish-white fungus resembling silkworm larvae which have died from " muscardine ".

On killing a larva of *Cossus* and keeping it under suitable conditions of humidity, the same pinkish-white fungus is seen to develop in its tissues.

The writers, who have made a study of this fungus on several specimens of caterpillars taken wild or reared in captivity, describe it under the name of *Spicaria Cossus* n. sp.

1046 – **A Form of *Botrytis bassiana*, Isolated from the Larva of the Macrolepidopteron *Nonagria typhae*.** — PORTIER PAUL and SARTORY in *Comptes rendus des séances de la Société de Biologie*, Vol. LXXIX, No. 14, pp. 702-703. Paris, July 22, 1916.

The larva of *Nonagria typhae* lives inside the stalks of *Typha latifolia* devouring the pith.

On killing one of these caterpillars and keeping it in a sufficiently moist place, it is seen to mummify and become covered with a whitish coating made up of the fructifications of *Botrytis*.

From the morphological point of view, it is not possible to differentiate the *Botrytis* on *Nonagria* from *B. Bassiana* ; on the other hand, the different biological characters which the Authors have been able to ascertain do not appear to them sufficient to constitute the *Botrytis* on *Nonagria* a new species.

(1) See *B.* Jan. 1913, N° 88 and Jan. 1915, N° 131. *Ed.*)

1047 – **The Successful Treatment with Insecticides of Plants in Flower.** — See No. 963 of this *Bulletin*.

1048 – **Insect Pests of the Sugarcane in Queensland, Australia.** — JARVIS EDMUND, in *Queensland Bureau of Sugar Experiment Stations, Division of Entomology, Bulletin* No. 3, pp. 48, Pl. I-IV. Brisbane, 1916.

INSECTS INJURIOUS TO VARIOUS CROPS

List of insect pests of the sugar-cane in Queensland, accompanied by particulars as to the nature and extent of the damage sustained and the habits and distribution of these insects.

1) The " noctuid moth borer " (*Phragmatiphila truncata* Walk. — fam. *Noctuidae*), caused extensive injury to plantations in October 1914 ; the larvae make their way into the young shoots and still tender buds, mine tunnels and partly destroy the tissues ; they cause a rapid drying up of the foliage. Natural enemies are : *Phcidole megacephala ; Apanteles nonagriae* which kills the larvae, and *Euplectus howardi* which destroys a large number of pupae ; 2) Moth stalk borer (*Diatraea saccharalis* Fabr. — fam. *Crambidae*) : this insect, so greatly feared elsewhere, hardly causes any injury in Queensland, where climatic conditions and natural enemies impede its development ; 3) Beetle borer (*Rhabdocnemis obscurus* Boisd. — fam. *Curculionidae*), has established itself in the district of Johnstone River, where it destroys some thousands of tons of cane every year ; for control, a tachinid fly, which is its natural enemy, was recently introduced into the region, namely, *Ceromasia sphenophori* Vil., discovered in New Guinea and already tried with success in the Fiji Islands ; 4) Moth shoot-borer (*Polyocha* sp. — fam. *Pyralidae*), which is rather rare ; the writer met with it in November at Pyramid, where it attacked the young shoots in the same way as *Phragmatiphila* ; 5) *Opogona glycyphaga* Meyr. (fam. *Tineidae*) occasionally attacks the seed beds and sometimes destroys up to 80 % of the buds ; also gnaws the leaf sheaths and the bark, and at times makes its way inside the cane and tunnels its walls ; 6) *Loxostoma* sp. (fam. *Tineidae*) and *Cosmopterix* sp. (fam. *Elachistidae*) are unimportant ; 7) Black gauger (*Heteronychus* sp., fam. *Scarabaeidae*) ; set eater (*Pentodon australis* Blackb. — sub-fam. *Dynastides*) and white ant (*Termes meridionalis* — fam. *Termitidae*), only occasionally injure the sugar cane, which they gnaw, and attack the newly opened buds and young plants ; 8) Wireworm (*Monocrepidius* sp., fam, *Elateridae*) seriously attacked new seedlings on the alluvial plains of Mackay and in some other localities of the district of Isis in 1910 ; 9) Yellow winged locust (*Locusta danica* Linn., fam. *Acridiidae*) invaded the western and northern provinces of Queensland in 1912 in huge swarms ; they devoured the leaves in the plantations and partly destroyed the crop ; among their natural enemies there are noted *Scelio australis* and *S. ovi* parasitic on the eggs ; 10) Large mottled locust (*L. australis* Brunner) is, like the last-named species, common in the coast region of Queensland and New South Wales ; 11) Long-nosed locust (*Atractomorpha crenaticeps* Blanch.) ; short-horned locust (*Oxya velox* Fab.); *Cyrtacanthacris* (?) *proxima* Walk.; *C. plagiata* Walk.; *C. guttulosa* Walk., all belonging to the family Acridiidae ; these insects occur in the cane plantations of Queensland, but so far have not occasioned any great damage ; 12) Army worm (*Cirphis unipuncta* Haw., fam. *Noctuidae*), wrought

great havoc in 1912 in the districts of Cairns and Mossman ; 13) Skipper butterfly (*Paruara mathias* Fab., fam. *Hesperidae*), the larvae of which were seen gnawing the leaves of the canes at Harvey's Creek in December 1914 ; 14) *Telicota augias kreffti* Macl. (fam. *Hesperidae*) and *Padraona marnas* Feld. (fam. *Hesperidae*), the larvae of which were sometimes observed in the plantations at Babinda ; 15) Grass worm (*Chusaris rhodias* Turner, fam. *Noctuidae*) attacked leaves at Gordonvale on the 2nd September 1914 ; 16) Web worm (*Harmologa miserana* Walk. (?), fam. *Tortricidae*), at Pyramid, towards the end of October 1914, was observed on the rhizomes of the cane ; 17) Browntail moth (*Euproctis holoxutha* Turner, fam. *Liparidae*), occasionally attacks the foliage ; 18) Plant eating beetle (*Rhyparida morosa* Jac., fam. *Chrysomelidae*); its usual host is assumed to be blady-grass (*Imperata arundinacea*), which, however, is disappearing little by little owing to the extension of cultivation ; the insect, thus forced to seek its food elsewhere, began to attack the sugar cane ; the savanna and heath fires, usually ignited every year, effectively help to prevent excessive development and spread of this parasite ; 19) *Colasposoma sellatum* Baly, *Rhyparida didyma* Fab. (fam. *Chrysomelidae*) and the leaf eating weevil (*Stenocorynus aridus* Pasc., fam. *Curculionidae*) are rather rare and economically unimportant ; 20) *Aphis sacchari* Zehn., *A. adusta* Zehn. (fam. *Aphididae*), *Tetigonia parthaon* n. sp. Kirk (fam. *Tetigoniidae*), *Perkinsiella saccharicida* Kirk. (fam. *Asiracidae*), *Aleurodes berghi* Sign., snow fly (fam. *Aleuridae*), *Ripersia* sp. (fam. *Coccidae*) and *Pseudococcus* (*calceolariae* Mask ?) (fam. *Coccidae*) cause more or less damage to plants, of which they suck the leaves ; 21) *Lepidiota albohirta* Waterh., *L. frenchi* Blackb., *L. rothei* Blackb., *L. caudata* Blackb., *L. froggatti* Macl. (fam. *Melolonthidae*); *Dasygnathus australis dejeani* Macl., *Xylotrupes australicus* Thomp., *Isodon puncticollis* Macl. (fam. *Dynastidae*); *Cacachroa decorticata* Macl. (fam. *Cetoniidae*); *Anoplognatus boisduvali* Boisd. (fam. *Anoplognatidae*) and *Anomala australasiae* Blackb. (fam. *Rutellidae*) attacks the roots of the cane ; the most formidable among these latter insects is undoubtedly *Lepidiota albohirta*. To control it light traps are used and also arsenical compounds with some success.

1049 - ***Nysius vinitor*, a Hemipterous Pest in Australia.** — FROGGAT W. W., in *Agricultural Gazette of New South Wales*, Vol. XXVII, 4th Part, pp. 270-272. Sydney, 1916.

The Rutherglen bug (*Nysius vinitor* Berg) which appeared in dense clouds throughout the territory of New South Wales, South Australia and the State of Victoria, has caused much injury there to orchards, seed plots and even garden flowers (1915-1916).

The presence of this insect in a potato and tomato field is immediately revealed by the fall and yellowing of the leaves, and rapid destruction of the fruits. Peaches and apricots are attacked in all stages of growth and spoilt by the numerous holes which *Nysius* opens in the skin in order to draw out the pulp juices.

The following means of control are advised : 1) destroying by fire the grass prairies amid which the insect lays its eggs, and from which the first migrating columns which invade cultivated lands start ; 2) applying an infusion of tobacco and soap ; when the insect is in the early stages of deve-

lopment good results may be obtained ; 3) using kerosene torches against adults ; a bundle of branches fixed to the end of a rod is dipped in kerosene and lit ; by rapidly moving the flame round and among the plants the insects are immediately killed, but care and some skill are required to carry out this operation without burning the leaves or the fruits ; 4) resort may be had to the use of light traps ; good results were obtained with them in several localities, but the method however is too expensive and complicated to become a customary practice on a farm.

1050 - **Unspotted Tentiform Apple Leaf Miner (*Ornix geminatella*), a Microlepidopterous Pest of several Fruit Rosaceae in America.** — HASEMAN L., in *Journal of Agricultural Research*, Vol. VI, No. 8, pp. 289-295, Pl. XXXIII. Washington, D. C., 1916.

*Ornix geminatella* Pack. has been extremely abundant in Missouri of late years, and has attracted the attention of fruit growers throughout the State. The insect lays its eggs on the leaves of several Rosaceae, and the larvae hatched from them bore tunnels in the thickness of the leaves, damaging them to a lesser or greater extent.

Among the hosts of *Ornix* the writer enumerates the following : apple tree, crab-apple (*Malus* sp.), *Crataegus* spp., *Prunus* spp., *Pyrus* spp.

As regards its distribution, *O. geminatella* has been reported in the following localities : New England, New York, Ithaca, (N. Y.), Illinois, Colorado, Kentucky, Michigan, Massachusetts, Connecticut, Ohio, etc.

The natural enemies of this microlepidopteron are recorded so far as : *Sympiesis nigrifemora* Ash., *S. tischerae* Ash., *S. meteori* Girault, *Eulophus lineaticoxa* Girault, *S. dolichogaster* Ash., *S. minutus* Howard and *S. lithocolletidis* Howard.

1051 - **Woolly Pear Aphis (*Eriosoma pyricola* n. sp.), Injurious to the Pear Tree in California.** — BAKER A. C. and DAVIDSON W. M., in *Journal of Agricultural Research*, Vol. VI, No. 10, pp. 351-360, Fig. 1. Washington, D. C., 1916.

The writers describe as a new species, under the name of *Eriosoma pyricola* an aphis hitherto believed to be *E. lanigerum* Hausmann (= *Schizoneura lanigera* Hartig) or " woolly apple-aphis ". This new species attacks the root system of all kinds of pear trees in California, and particularly injures the French wild pear tree so commonly employed as stock, especially for the Bartlett varieties. The Kieffer, and above all the Japanese types, on the other hand, are highly resistant. The wingless form of this aphis usually lives on the fibrous radicles, down to a depth of a yard in the ground, and the colonies are generally more numerous in the vicinity of the trunk, although frequently met with even at 3 or 4 yards' distance. This *Eriosoma* does not confine itself to attacking the young roots, but also, though more rarely, attacks the completely formed roots, and sometimes even the main roots. In this latter case, however, it is localised in the hardened tissues developing in consequence of an abrasion. Colonies of this aphis can even live on the underground part of tender and swollen shoots. It is not like *E. lanigerum*, which produces tuberous excrescences and lesions on the largest roots of the apple tree ; it prefers the rootlets, and destroys them without causing the appearance of any special hypertrophy. Adult trees have little

to fear in the attack of *E. pyricola*, and only in extreme cases can the latter prevent or slightly retard their growth. The case is quite different where it is a question of young plants less than 4 years old. The almost simultaneous loss of a large number of rootlets may completely arrest growth and bring about a premature fall of the leaves, frequently followed by the death of the plant.

Winged forms appear in autumn. In gardens and in all localities where the environmental conditions are favourable to the growth of the winged individuals, the outbreaks in spring and at the beginning of summer are always unimportant, in view of the small number of wingless individuals which hibernate on the roots, while the major part of the colony migrates. From the month of July onwards, however, the aphids increase rapidly, attaining their maximum number in September, at which time the winged forms appear. The departure of the winged swarms, which often migrate even to great distances, also marks a period of rest for the plant, which now having nothing to fear but the few wingless aphids remaining on the roots through winter, puts forth new rootlets and gathers strength to resist fresh attacks.

The winged forms stay on the leaves and trunk of the pear trees, and afterwards generally take up their abode on the foliage and trunk of *Alnus* sp., where they go through their life cycle and produce the sexual generation.

1052 - ***Galerucella cavicollis*, a Coleopterous Pest of Cherry and Peach Trees in the United States** (1). — CUSHMANN R. A. and ISELY DWIGHT, in *United States Department of Agriculture, Bulletin* No. 352, pp. 1-28, Fig. 1-9, Pl. I-IV. Washington, D. C., 1916.

In the spring of 1915, the cherry and peach plantations extending over a vast area in the north-east of the United States sustained considerable damage from a sudden and formidable outbreak of *Galerucella cavicollis* Le Conte (cherry-leaf beetle). This already known beetle had never previously caused such extensive injury. Among the regions which suffered most are the States of New York and Pennsylvania and the northern part of Western Virginia.

The adults attack the leaves of the cherry and peach and the fruits of the cherry, gnawing them and producing fairly deep injuries. When the attack is very severe, the plants may be almost completely stripped of leaves. The natural host of *Galerucella* is said to be *Prunus pensylvanica* (bird cherry) which spreads with great rapidity along the road sides in the thickets and on the lands formerly occupied by forests destroyed by fire, which form a very favourable environment for the growth and multiplication of the insect. The latter hibernates in the adult form, leaving its shelter in the spring ; it mates and the female oviposits at the foot of the trees amid the dried leaves and other vegetable detritus. The larvae hatch in a fortnight, and when full grown, pupate in a hole which they have made in the soil. The adults emerge in two or three weeks and spread through the plantations where they attack the leaves and fruits. This continues

(1) See *B.* June 1916, No. 718. (*Ed.*)

throughout the good season until the first colds compel them to seek shelter.

Among the natural enemies of *Galerucella* mention must be made of the coleopteron *Lebia ornata* Say, which attacks the adults, tears off the elytra and feeds on the soft tissues. It also kills the pupae and feeds on them, only leaving the pupal skin intact.

For control there are advised : 1) applications of 40 % solutions of nicotine sulphate, in the proportion of one part to 600 of water ; the addition of soap (1 part per 200 of mixture) increases the efficacy ; 2) applications of sweetened lead arsenate, especially for cherry trees, according to the following formula : 1.3 lb. lead arsenate, 0.33 galls of treacle and 11 galls of water.

1053 – **Terrapin Scale (*Eulecanium nigrofasciatum*), Injurious to the Peach Tree in America.** — SIMANTON F. L., in *United States Department of Agriculture, Bureau of Entomology, Bulletin* No. 351, pp. 1-96, Fig. 20. Washington, D. C., 1916.

*Eulecanium nigrofasciatum* Pergande causes more and more serious injury to peach trees in the eastern States and especially in Pennsylvania and Maryland. From here it has spread to the north where it attacks other plants, among which *Acer pseudoplatanus* L. and *A. saccharinum* L. are its favourite hosts. Towards the south-west, it has already reached the Gulf States and has attacked *Phoradendron* spp., on which it thrives well. The range of this *Eulecanium* tends to increase in such measure that it soon will probably be spread in all the regions where the peach, the plum, *Acer* spp. (maple) and *Phoradendron* spp. occur in abundance.

Host plants are : the sycamore maple (*Acer pseudoplatanus* L.) ; silver maple (*A. saccharinum* L.) ; sugar maple or rock maple (*A. saccharum* L.) ; *Amygdalus Persica* L. and its varieties ; spice-bush (*Benzoin aestivale* (L.) Nees) ; *Betula* spp. ; saffron plum (*Bumelia augustifolia* Nutt.) ; *Castanea dentata* (Marsh.) Borkh. ; red-bud (*Cercis canadensis* L.) ; Japan quince (*Chaenomeles japonica* Lindl.) ; *Clematis* sp. ; hawthorn (*Crataegus Oxycantha* L.) ; *Crataegus* spp. ; quince (*Cydonia oblonga* Mill.) ; oleaster (*Elaeagnus angustifolia* L.) ; " wahoo " or " burning bush " (*Evonymus atropurpureus* Jacq.) ; *Fraxinus* sp. ; American holly or white holly (*Ilex opaca* Ait.) ; sweet bay (*Magnolia virginiana* L.) ; wild China tree (*Melia Azedarach* L.) ; *Morus* sp. ; *Nerium Oleander* L. ; *Olea* sp. ; wild cherry (*Padus* sp.) ; mistletoe (*Phoradendron* spp.) ; sycamore or plane-tree (*Platanus occidentalis* L.) ; European plane-tree (*P. orientalis*) ; cottonwood (*Populus deltoides* Marsh.) ; Simon plum or apricot plum (*Prunus Simoni* Carr.) ; *Prunus* spp. ; *Pyrus communis* L. ; *P. Malus* (L.) Britton ; live oak (*Quercus virginiana* Mill.) ; *Ribes* spp. ; *Rosa* spp. ; weeping willow (*Salix babylonica* L.) ; *Salix* spp. ; soapberry (*Sapindus marginatus* Willd. ; *Tilia* spp. ; *Vaccinium* spp. ; *Vitis vinifera* L. ; and *Vitis* spp.

Of the numerous cultivated host plants, the peach tree has suffered most up to now. *Eulecanium* causes two-fold injury : 1) it abstracts the sap, and thus in course of time weakens the leaves and impairs their functions; 2) it deposits honey-dew on the leaves and fruits, which are rendered use-

less both owing to this fact and to the abundant growth of fungi, which find an excellent medium in this honey-dew.

The natural enemies of *Eulecanium* may be divided into two groups : *a*) the predatory enemies, which prey on the young stages or adult insects ; *b*) parasites.

Among the predatory enemies are : lace-wing fly (*Chrysopa nigricornis* Burm.); *Hemerobius stigmaterus* Fitch. ; *Laetilia coccidivora* Comst. ; *Camptobrochis nebulosus* Uhl, ; and *Hyperaspis binotata* Say.

Among the parasites are *Coccophagus ater* How. ; *C. cognatus* How. ; *C. lecanii* Fitch. ; *c. cinguliventris* Gir. ; *C. longifasciatus* How. ; *C. flavoscutellum* Ashm ; *C. fraternus* How. ; *Aphycus annulipes* Ash. ; *A johnsonii* How. : *A. stomachosus* Gir. ; *Anagyrus nubilipennis* Gir. ; *Eunotus lividis*, Ashm ; *Pachyneuron altiscuta* How. ; *Prospalta aurantii* How. ; *Chiloneurus albicornis* How. ; *Blastothrix sericea* Dalm. and *Comys fusca* How.

As artificial means of control, it is advised to apply : 1) in the spring, before the buds open, the following mixture :

| | |
|---|---|
| Raw linseed oil . . . . . | 5 gallons. |
| Gasoline . . . . . | 3 " |
| Soap . . . . . | 2 pounds |
| Water . . . . . | 92 gallons |

2) after the trees are in full foliage, and before the *Eulecanium* migrates leafward, apply the following :

| | |
|---|---|
| Flour (in paste) . . . . . | 10 pounds |
| Stone Lime . . . . . | 15 " |
| Sulphur . . . . . | 20 " |
| Water to make . . . . . | 50 gallons |

1054 - ***Anastrepha serpentina*, a Dipteron Injurious to Several Fruit Plants in Brazil** (1). — DA COSTA LIMA A., in *Boletim do Ministerio de Agricultura, Industria e Commercio*, Year IV, No. 3, pp 99-104. 1 Pl. Rio de Janeiro, 1916.

In Brazil, *Anastrepha serpentina* Wied (" mosca de frutas ") injures the fruit of the following plants : *Mammea americana* L. (" abricoteiro do Pará "), *Lucuma Caimito* A. D. C. (" abieiro "), *Mimusops coriacea* Miq. (" abricoteiro ") and *Sapota achras* Mill. (" sapoteiro ").

The female bores a hole in the pericarp and deposits its eggs therein, as many as twenty at a time ; the larvae, which hatch within 3 or 4 days, feed on the pulp, in which they tunnel, often causing the fall of the fruit.

Means of control : 1) gathering and destroying the damaged fruit ; 2) spraying with sweetened arsenical solutions (for instance : raw sugar, 2.5 lbs.; lead arsenate 3 oz.; water, 4 galls.) ; the applications must be made every 15 days ; 3) vessels containing poisoned attractive substances (for instance, sugared water and arsenic salts), which are suspended to the branches of the fruit plants attacked.

1055 - **Gravepine Flea Beetle (*Haltica chalybea*), a Coleopterous Pest of *Vitis rotundifolia* and *V. Munsoniana* (Muscadine grapes) in the United States of America.** — See No. 987 of this *Bulletin*.

(1) See *B.* April 1915, No. 454. (*Ed.*)

# INJURIOUS VERTEBRATES.

1056 – **The Control of Field Voles in Italy.** — SPLENDORE ALFONSO, in *Rendiconti delle sedute della Reale Accademia dei Lincei, Classe di Scienze fisiche, matematiche e naturali*, Series 5, Vol. XXV, 2nd Half Year, Part I, pp. 46-49. Rome, July 1916.

In Capitanata (province of Foggia) and the adjoining provinces (1) which have been invaded by field voles, the Italian Government has *inter alia* appointed a Committee instructed to take such measures as may be best adapted to combat this scourge.

Technical experts have been sent to the region over-run, both in order to study the effects on the spot and to undertake control measures by all possible means. Ditches have been excavated and traps used to prevent or at any rate limit the spread of the field voles from the fields to the vineyards. Different poisoned baits have been put down, and different kinds of virus have also been used.

The ditches and traps proved effective, but insufficient to achieve the purpose in view of the extent of the infested parts and the considerable number of the rodents.

Among the poison used, zinc phosphide alone proved efficacious (2).

The different viruses gave negative results undoubtedly owing to loss of their virulence.

It is well known that the viruses which have been recognised as suitable for field vole control are Löffler's bacillus and Danysz's bacillus (3). They may be transmitted to field voles either by subcutaneous injections or through the digestive passages, but the drawback is that the cultures easily lose their virulence. The Ministry of Agriculture therefore instructed the writer to undertake investigations with the object of producing a new virus of sufficient activity for the case in question; the investigations were carried out partly in Capitanata and partly in the Laboratory of Agricultural Entomology of the Royal University of Rome.

In field voles (*Pytymys savii*) captured at Cerignola, the writer observed the constant presence of a micrococcus, both in the circulating blood and in the various internal organs, and the lymphatic glands in different parts of the body. In some of these rodents, for which a microscopic examination of the internal organs had given negative or almost negative results, the germ was found in large quantities in the lymphatic glands of the axillae. The micro-organism is readily stained with aniline dye and Gram's stain. In the tissues, where it occurs both within and without the cells, it often has the coeciform and even diplococcal appearance; in artificial cultures (agar and ordinary bouillon) it retains this appearance for some time; later on it takes on a more and more bacillary aspect, and occurs likewise in short and thick-

(1) See *B.* August 1916, No. 921. (*Ed.*)

(2) See *B.* January 1914, No. 89.

(3) See *B.* Jan. 1911, No. 362; *B.* June 1911, No. 2016; *B.* Oct. 1912, No. 1488; *B.* Nov. 1912, N. 1567; *B.* July 1913, No. 897; *B.* Jan 1915, No. 132. (*Ed.*)

set forms sometimes polar staining with aniline dyes. At Cerignola the writer found this micro-organism both in dead and dying voles, and even in some living animals more or less healthy in appearance. Certain it is that the presence of the micrococcus is accompanied by a high mortality. On the other hand, in the field voles captured and examined at Foggia the writer did not find either any infection produced by the above germ or epidemic disease.

The writer advises scattering the dead field voles collected in the principal centre of the infection (region of Contessa near Cerignola) through the other regions over-run by these rodents, but where infection in these latter has not yet taken place.

The writer is continuing his enquiries in order to ascertain : whether the virus can be communicated by means of ectoparasites (fleas and especially lice) ; whether the micro-organism observed by him is more or less analogous to that of Löffler and Danysz ; whether it is utilisable in field vole control and in what way.

ALFREDO RUGGERI, *gerente responsabile*.

(c) Publications of the Bureau of Agricultural Intelligence and Plant Diseases.

1. LE SERVICE DE PROTECTION CONTRE LES MALADIES DES PLANTES ET LES INSECTES NUISIBLES DANS LES DIVERS PAYS (The Present Organization of the Services for the Control of Plant Diseases and Insect Pests in the Different Countries). (1914, 350 pages, 4to) . . . . . Frs. 4.00
2. PRODUCTION ET CONSOMMATION DES ENGRAIS CHIMIQUES DANS LE MONDE (Production and Consumption of Chemical Manures in the World). (Second Edition, 1914, 162 pages, 5 diagrams, 2 maps, 16mo) . . . . . » 3.50

(d) Publications of the Bureau of Economic and Social Intelligence.

1. L'ACTIVITÉ DE L'INSTITUT INTERNATIONAL D'AGRICULTURE DANS LE DOMAINE DE LA COOPÉRATION, DE L'ASSURANCE ET DU CRÉDIT AGRICOLES (The Work of the International Institute of Agriculture in the Field of Agricultural Co-operation, Insurance and Credit). (In French, German and Italian). (1912, 34 pages, 16mo) . . . . . » 0.50
2. MONOGRAPHS ON AGRICULTURAL CO-OPERATION IN VARIOUS COUNTRIES, Vol. I. (1911, 451 pages, 16mo). (In English and French) . . . . . » 3.50
   Do. Vol. II. (1915, 213 pages 16mo). (In English and French) . . . » 3.50
3. AN OUTLINE OF THE EUROPEAN CO-OPERATIVE CREDIT SYSTEMS (Second Edition, 1913, 72 pages, 16mo) . . . . . » 0.50
4. L'ORGANISATION DE LA STATISTIQUE DE LA COOPÉRATION AGRICOLE DANS QUELQUES PAYS (The Organization of the Statistics of Agricultural Co-operation in certain Countries). (1911, 163 pages, 8vo) . . . . . 1.50
5. L'ASSURANCE-GRÊLE DANS QUELQUES PAYS ET SES PROBLÈMES (Insurance against Hail in some Countries and its Problems). (1911, 110 pages, 8vo) . . » 1.50
6. AGRICULTURAL CREDIT AND CO-OPERATION IN ITALY: SHORT GUIDE TO RURAL CO-OPERATION IN ITALY (in English, 35 pages and in Italian, 34 pages, 16mo) . . . . . » 0.25

(e) Other publications.

1. L'INSTITUT INTERNATIONAL D'AGRICULTURE, SON ORGANISATION, SON ACTIVITÉ, SES RÉSULTATS (The International Institute of Agriculture, its Organization, Activity, and Results). (1914, 31 pages, in English, French and Italian; illustrated) . . . . . Frs. 1 —
2. LOUIS-DOP: LE PRÉSENT ET L'AVENIR DE L'INSTITUT INTERNATIONAL D'AGRICULTURE (CONFÉRENCE) (Present and Future of the International Institute of Agriculture) (Address). (1912, 60 pages, 16mo). . . . . » 1 —
3. SANTIAGO ALDUNATE: EL INSTITUTO INTERNACIONAL DE AGRICULTURA Y SU IMPORTANCIA PARA LA AMÉRICA LATINA, EN ESPECIAL PARA CHILE (Conferencia) (The International Institute of Agriculture and its Importance for Latin America, especially for Chile). (1913, 30 pages, 16mo) (Address). . . . » 1 —

## II. Publications not for Sale.

1. CONFÉRENCE INTERNATIONALE DE 1905 POUR LA CRÉATION D'UN INSTITUT INTERNATIONAL D'AGRICULTURE (International Conference of 1905 for the Foundation of an International Institute of Agriculture), (1905, 254 pages, 4to).
2. ACTES DES ASSEMBLÉES GÉNÉRALES DES ANNÉES 1908, 1909, 1911, 1913 (Proceedings of the General Assemblies of 1908, 1909, 1911 and 1913). (Four volumes, 8vo., one 16mo).
3. PROCÈS-VERBAUX DU COMITÉ PERMANENT DES ANNÉES 1908, 1909, 1910, 1911, 1912, 1913 (Procès-verbaux of the Permanent Committee, 1908, 1909, 1910, 1911. 1912, 1913, 1914 and 1915). (Five volumes, 8vo., and two 16mo).
4. RAPPORTS ET ETUDES DU BUREAU DE LA STATISTIQUE GÉNÉRALE (Reports and Studies of the Bureau of General Statistics). (1911, 260 pages, 8vo).
5. THE SCIENCE AND PRACTICE OF FARMING DURING 1910 IN GREAT BRITAIN. (646 pages, 16mo).
6. ETUDE SUR LES RECENSEMENTS DE LA POPULATION AGRICOLE, LES SALAIRES DE LA MAIN-D'ŒUVRE RURALE ET LES COURANTS D'ÉMIGRATION DANS LES DIFFÉRENTS ETATS (Study on the Census Returns of the Agricultural Population, the Wages of Rural Labour, and the Currents of Emigration in the Several Countries). (1912, 150 pages, 8vo).

NOTE.

(1) All subscriptions and remittances for the Institute's publications should be made either directly to the International Institute of Agriculture, Rome, or to the principal booksellers.

For Great Britain and Ireland, subscriptions to the Bulletins 1, 2, 3 and remittances for the Year Books are also received at the Board of Agriculture and Fisheries, 4 Whitehall Place, London. S. W.

(2) The prices quoted include packing and carriage. All our publications are despatched on receipt of postal order or international reply coupons.

(3) Despatch is made with every care and punctuality, but unregistered volumes travel at consignee's risk.

(4) To avoid miscarriage, for which the Institute does not hold itself responsible, an additional amount of 25 centimes for registration should be sent with each order.

(5) In case of change of address, the subscriber is requested to notify the Publishing Bureau of the Institute, forwarding address label.

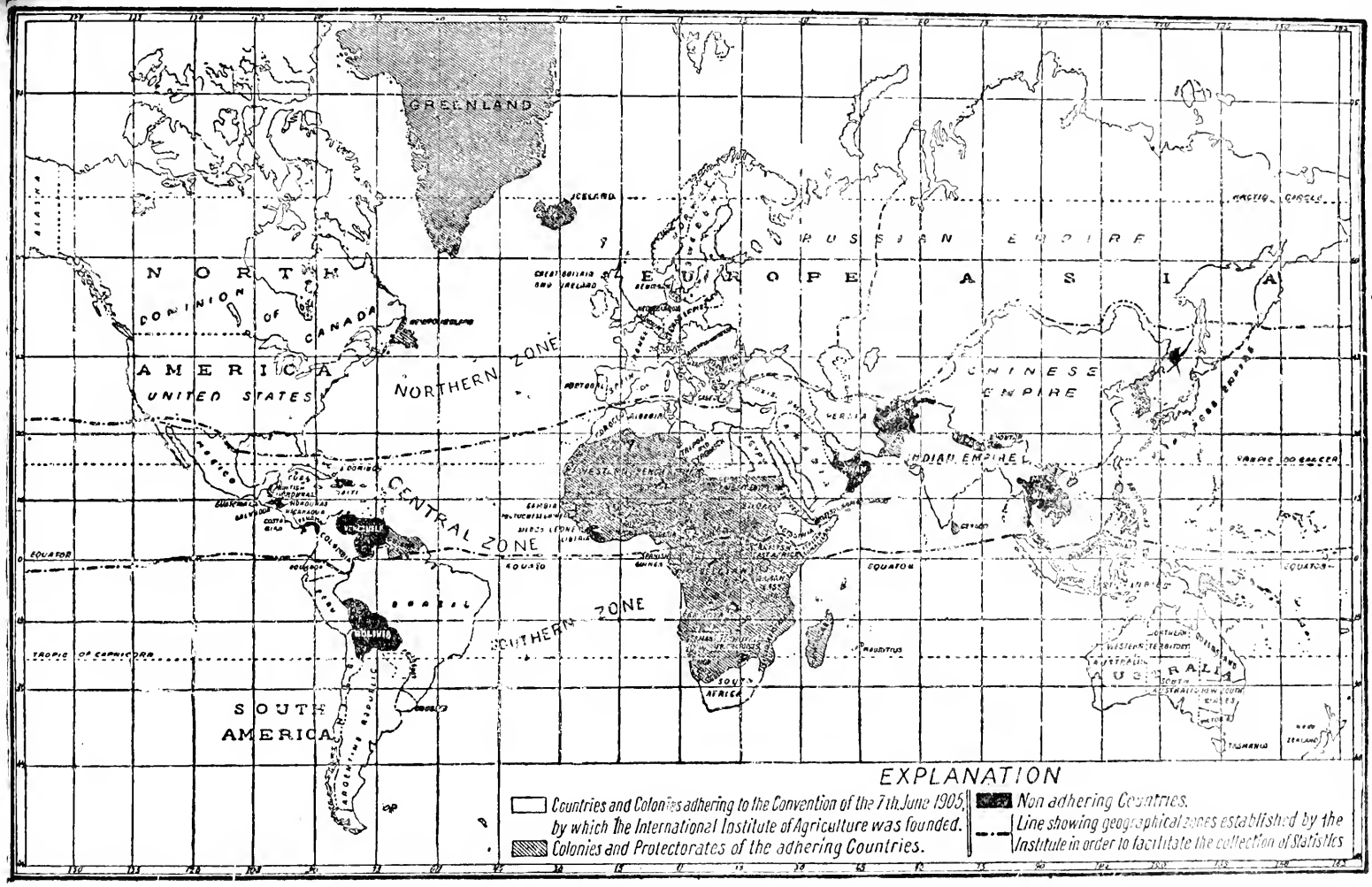
GREENLAND
ICELAND
NORTH AMERICA
DOMINION OF CANADA
UNITED STATES
NORTHERN ZONE
CENTRAL ZONE
SOUTHERN ZONE
SOUTH AMERICA
EUROPE
ASIA
RUSSIAN EMPIRE
CHINESE EMPIRE
INDIAN EMPIRE
AUSTRALIA
SOUTH AFRICA
EQUATOR
TROPIC OF CAPRICORN
ARCTIC CIRCLE
TROPIC OF CANCER
EXPLANATION
Countries and Colonies adhering to the Convention of the 7th June 1905, by which the International Institute of Agriculture was founded.
Colonies and Protectorates of the adhering Countries.
Non adhering Countries.
Line showing geographical zones established by the Institute in order to facilitate the collection of Statistics

INTERNATIONAL INSTITUTE OF AGRICULTURE
BUREAU OF AGRICULTURAL INTELLIGENCE AND PLANT DISEASES

# INTERNATIONAL REVIEW OF THE SCIENCE AND PRACTICE OF AGRICULTURE

MONTHLY BULLETIN
OF AGRICULTURAL INTELLIGENCE AND PLANT DISEASES

YEAR VII - NUMBER 10
OCTOBER 1916

ROME
PRINTING OFFICE OF THE INSTITUTE
1916

# Publications of the International Institute of Agriculture.

## I. Publications for Sale.

| | Annual subscription | Single number |
|---|---|---|
| **A. — *MONTHLY OR WEEKLY PUBLICATIONS.*** | | |
| 1. INTERNATIONAL CROP REPORT AND AGRICULTURAL STATISTICS (*Bulletin of Agricultural and Commercial Statistics*), published monthly in English, French, German, Spanish and Italian, 16mo | Frs. 6 | 0,60 |
| 2. INTERNATIONAL REVIEW OF THE SCIENCE AND PRACTICE OF AGRICULTURE (*Monthly Bulletin of Agricultural Intelligence and Plant Diseases*), published monthly in English, French, German, Spanish and Italian. (Each number consists of about 180 pages, 16mo) | » 18 | 2 — |
| 3. INTERNATIONAL REVIEW OF AGRICULTURAL ECONOMICS (*Monthly Bulletin of Economic and Social Intelligence*), published monthly in English, French, German, Spanish and Italian. (Each number consists of about 150 pages, 16mo) | » 18 | 2 — |
| Subscription to all three Bulletins | » 36 | |
| **B. — *HALF-YEARLY PUBLICATIONS.*** | | |
| 1. Statistical Notes on Cereals. Studies on yeld, trade, consumption and prices, with rates of ocean freight | Frs. | 1,50 |
| 2. The International Movement of Fertilisers and Chemical Products useful to Agriculture | » | 1,50 |
| **C. — *YEAR BOOKS.*** | | |
| 1 ANNUAIRE INTERNATIONAL DE STATISTIQUE AGRICOLE POUR 1910 (International Year Book of Agricultural Statistics, 1910). (1912, XLVIII + 327 pages, 16mo) | Frs. 5 | |
| Do. Vol. II, Years 1911-1912. (1914, XXXIV + 624 pp. 16mo) | » 5 — | |
| Do. Vol. III, Years 1913-1914. (1915, XLIV + 788 pp. 16mo) | » 5 — | |
| 2. ANNUAIRE INTERNATIONAL DE LÉGISLATION AGRICOLE, 1st. Year, 1911, (International Year Book of Agricultural Legislation, 1911). (1912, 1,122 pages, 16mo) | » 10 — | |
| Do. 2nd Year, 1912. (1913, 994 pages, 16mo) | » 10 — | |
| Do. 3rd Year, 1913. (1914, 1,114 pages, 16mo) | » 10 — | |
| Do. 4th Year, 1914 (1915, LXVIII + 1,020 pages, 16mo) | » 10 — | |
| Do. 5th Year, 1915 (1916 LXXVXVI + 1,460 pages, 16mo) | » 10 — | |
| **D. — *OTHER PUBLICATIONS.*** | | |
| (*a*) Publications of the Library. | | |
| 1. CATALOGUE DE LA BIBLIOTHÈQUE, ANNÉE 1909 (Catalogue of the Library, 1909). (356 pages, 8vo) | Frs. 3 — | |
| 2. LISTE DES REVUES ET JOURNAUX RÉGULIÈREMENT REÇUS PAR L'INSTITUT, 1913 (List of Reviews and Papers regularly received by the Institute, 1913). (84 pages, 16mo) | » 0.50 | |
| (*b*) Publications of the Bureau of Statistics. | | |
| (1) *Various publications* | | |
| 1. L'ORGANISATION DES SERVICES DE STATISTIQUE AGRICOLE DANS LES DIVERS PAYS, Vol. I (The Organization of the Agricultural Statistical Services in the Different Countries, Vol. I). (1910, 446 pages, with tables in addition to the text, 16mo) | » 4 — | |
| Do. Vol. II. (1913, 146 pages, 16mo) | | 2 — |
| 2. RECUEIL DE COEFFICIENTS POUR LA CONVERSION DES POIDS, MESURES ET MONNAIES AU SYSTÈME MÉTRIQUE DÉCIMAL (Collection of Coefficients for the Conversion of Weights, Measures, and Money Values into the Decimal Metric System). (1914, 84 pages, 32mo) | » | 1 |
| (2) *Monographs* (*New Series*). | | |
| 1. L'ORGANISATION DE LA STATISTIQUE DU COMMERCE EXTÉRIEUR EN ITALIE (Organisation of the Statistics of Foreign Trade in Italy) (1913, 190 pages 16mo) | » 2 — | |
| 2. LE MARCHÉ DES CÉRÉALES D'ANVERS (The Antwerp Corn Market) (1913, 62 pages, 16mo) | » 1 — | |
| 3. LES BOURSES DES PRODUITS AGRICOLES DE HAMBOURG ET BUDAPEST (The Agricultural Produce Exchanges of Hamburg and Budapest). (1913, 55 pages, 16mo) | » 1 — | |
| 4. NOTES SUR LES STATISTIQUES DU COMMERCE EXTÉRIEUR DANS LES DIFFÉRENTS PAYS: Publications Statistiques, Territoires, Sortes de Commerce, Provenances et Destinations des Marchandises (Notes on the Statistics of Foreign Trade in the Different Countries: Statistical Publications, Territory, Kinds of Trade, Source and Destination of Goods). (1914, 96 pages, 16mo) | » 2 — | |
| 5. LA RÉPARTITION AGRICOLE DES TERRITOIRES DES DIFFÉRENTS PAYS (Areas under Crops in the Different Countries). (1914, 310 pages, 16mo) | » 5 — | |
| (3) *Other publications.* | | |
| UMBERTO RICCI: LES BASES THÉORIQUES DE LA STATISTIQUE AGRICOLE INTERNATIONALE (Theoretical Bases of International Agricultural Statistics), | | |

INTERNATIONAL INSTITUTE OF AGRICULTURE
BUREAU OF AGRICULTURAL INTELLIGENCE AND PLANT DISEASES

# INTERNATIONAL REVIEW OF THE SCIENCE AND PRACTICE OF AGRICULTURE

MONTHLY BULLETIN
OF AGRICULTURAL INTELLIGENCE AND PLANT DISEASES

YEAR VII - NUMBER 10
OCTOBER 1916

ROME
PRINTING OFFICE OF THE INSTITUTE
1916

*In quoting articles, please mention this BULLETIN.*

# CONTENTS

## III. — LIVE STOCK AND BREEDING.

### *a*) GENERAL.



### *b*) SPECIAL.

## IV. — Farm Engineering.



## V. — Rural Economics.



## VI. — Agricultural Industries.



# PLANT DISEASES.

## II. — Diseases not due to parasites or of unknown origin.



## III. — Diseases due to Fungi, Bacteria and other Lower Plants.

## IV. — Weeds and Parasitic Flowering Plants.



## V. — Injurious Insects and other Lower Animals.



## VI. — Injurious Vertebrates.



The Bureau assumes no responsibility with regard to the opinions and the results of experiments outlined in the Bulletin.

The Editor's notes are marked (*Ed.*).

FIRST PART.

# ORIGINAL ARTICLES

## The Selection and Hybridisation of American Vines in Italy

by

Dr. G. PATANÈ

*Ministry of Agriculture, Italy.*

### HISTORICAL.

The replanting with resistant vines or reconstitution of the vineyards destroyed by phylloxera, was begun in Italy more than thirty years ago. For this purpose seeds of American and French vines were imported, and from these plants were obtained, of which only the strongest and those which retained intact the characteristics of their species were preserved. At the same time the work of hybridisation between these plants and the native vines was started, but, since it was necessary to submit the plants produced to long trials, they were not introduced at once into general cultivation. However, definite conclusions as regards many of these hybrids produced in Italy and especially in Sicily cannot yet be given, for their cultural value has not yet been tested in a sufficient number of localities or in sufficiently diverse conditions. On the contrary, for other hybrids experimental trials are already numerous and it is possible to state that they possess valuable qualities as regards resistance to phylloxera and to drought, adaptability to different soil conditions, and affinity for the native vines.

At the beginning of the work of reconstitution all the facts of this important problem were not known. The vine-growers were accustomed to see the European vine prosper in almost all soils and the most diverse conditions, and believed that the American vines would do so ; they forgot that the innumerable varieties of the former belonged to one species (*Vitis vinifera*), while the latter group was composed of various species adapted, throughout centuries, to live only in special conditions. As a result fail-

ures in the culture of the American vines were of frequent occurrence; either the vine chosen as stock (graft-bearer) was not adapted to the nature of the soil, or the grafting rarely took successfully, or else the vine showed but little affinity for the native plants chosen as scions. This explains the fact that certain vines, such as York Madeira, which gave rise to much enthusiasm at first, disappeared rapidly from the reconstituted vineyards; that others, such as Clinton and Jacquez, commended as direct bearers of good grapes, have suffered the same fate or have remained only in limited areas, and finally that certain excellent vines, such as Riparia, which is cultivated in all districts, do not always give the results expected from them.

Failures of this kind, however, have been experienced in other countries ravaged by the pest of phylloxera; in France, for example, where in the early years of reconstruction the vines Taylor, Concord, Clinton, York Madeira, Jacquez, etc. were widely planted, though but few examples of these vines are found there today.

France, which had preceded Italy in the work of reconstitution, had in the meantime selected certain American vines and had produced some new hybrids which, tested in the vine-growing regions, had given good results. The Italian vine-growers, discouraged by their failures with plants grown from seed, had recourse to the vines produced in France, and began to import them. These vines were derived partly from the selection of pure species (Riparia Gloire and Grand glabre-Rupestris Martin, Ganzin, and Metalique-Berlandieri Resseguier Nos. 1 & 2) and partly from hybrids. The latter group had been obtained by crossing American vines partly among themselves (Riparia × Rupestris Coudere 3306 and 3309 etc.) and partly with French vines (Aramon × Rupestris Ganzin No. 1 — Mourvedre × Rupestris 1202 — Chasselas × Berlandieri 41 B., etc.).

In addition to these plants destined to serve as stocks, the French vine-growers endeavoured to obtain hybrids which would act as direct-bearers, and many of such hybrids obtained by CONDERC, SEIBEL, CASTEL, etc., were introduced into Italy. These plants, however, did not generally give the results which were expected from them, and were not widely cultivated.

The Italian Ministry of Agriculture greatly encouraged the distribution of the French stocks, but the work of selection and hybridisation was regarded as superfluous and its cessation was ordered in the institutions under government control. Reconstitution by means of French stocks alone was encouraged; these were distributed everywhere but were not always chosen with sufficient care. As a result the excellent work of GRIMALDI, RUGGERI, PAULSEN, LONGO and others who believed in reconstitution with American-Italian plants was neglected and sometimes interrupted.

In practice this new departure in the work of reconstitution did not always give the results which were expected, and numerous and serious failures occurred especially in districts with a dry climate, so different from those in which the new vines had been developed and selected. These

failures are easily explained by the phenomenon so well described by Prof. ORAZIO COMES, director of the College of Agriculture at Portici: "A plant cultivated in a climate different from that of its native country preserves, and may even increase, its original resistance to injurious conditions if it has been transplanted to a colder climate"; on the contrary it gradually loses this resistance in proportion to increased warmth in the climate. (1)

It is undoubtedly easier and more expeditious to introduce into a country plants which have already been tested elsewhere, than to select the native plants, but the results are often less satisfactory. D. FREDERICO PAULSEN (2), director of the American Vine Nursery at Palermo, has stated, during the course of a vigorous and impartial enquiry in the vineyards of Sicily, that the American vines with which many vineyards have been replanted are often *less productive* than native vines planted in identical conditions, and that the reconstituted vineyards *do not last as long* as the old vineyards of *Vinifera* planted as a selfbearer. On the contrary in France the new plants produce abundantly; it is not unusual to obtain 1800, 2200 even 2700 gallons of wine per acre especially in the south with the vine Aramon. It is evident, Dr. Paulsen states, that the lesser production obtained in Italy is contrary to the facts observed in France where reconstitution was first started, and where the serious problems which it entails have been largely studied.

The Italian Ministry of Agriculture was naturally troubled at the decay of the vineyards replanted with stocks imported from France and in 1914 it was decided to revert to the previous methods. The institutions under government control were ordered to undertake experimental work with the object of producing indigenous stocks, which would be more suited to local conditions and would possess more affinity for grafting with the local vines. The directors of the schools of vine-growing and vine-making, of the agricultural colleges, of the American vine nurseries, as well as the technical experts at the head of the anti-phylloxera associations ("Consorzi antifillosserici") welcomed with enthusiasm this new course, the adoption of which had been previously urged in vain by many of them. The work is now carried on with much activity in the above named institutions, in fact in some of them it had never been interrupted. As the greater part of this new work has only just started, results can only be given by those institutions, or individuals, who had undertaken the work in the earlier period and had never entirely relinquished it. The selection of vines has in some cases been carried on for several years for the experiments with them were still conducted in spite of the regulations to the contrary which were in force for some time. It is possible to state

(1) Prof. O. COMES, La Profilassi, nella patologia vegetale. *Reale Istituto d'incoraggiamento di Napoli*, pp, 19 Naples, Cooperativa tipografica. See also *B.* August 1916, No. 937.

(2) Dr. F. PAULSEN, Risultati della ricostituzione in Sicilia. Ammaestramenti del passato e consigli per l'avvenire. Relazione presentata al Congresso dei viticultori siciliani tenutosi a Noto il 24 agosto 1914. Palermo, Tipografia G. Di Giorgi, 1914.

briefly the chief results obtained by the government institutions, by the anti-phylloxera associations, and also by certain vine-growers, interested in their occupation, who have succeeded at considerable expense and thanks to indefatigable labour in producing vines of considerable value.

In giving the following results it is convenient to group them according to the nature of the institutions in which the work has been carried out, thus — agricultural colleges, government nurseries for American vines, anti-phylloxera associations, private vineyards.

## Work carried out by agricultural colleges and schools.

1) *Alba (Piedmont), School of Vine-growing and Wine-making.* — This school, which is now directed by Prof. F. A. Sannino, took up the work of hybridisation between American vines and those of Piedmont at the time when the late Prof. Domizio Cavazza was at its head.

A hybrid Barbera × Rupestris Cavazza N° 1, of which the female parent occurs in the garden of the castle of Barbaresco, appears to be doing well and promises to give good results in the future; in the experimental vineyard of Vallecrosia it lasted from 1889 to 1907 in which year the vineyard was suppressed. On the estate known as *Bricco*, which belongs to the Cavazza family, it has been cultivated partly as a self-bearer and partly by grafting. It is hoped that it will form a good stock for the region of Piedmont and especially for the vine Barbera.

Among other hybrids obtained by Cavazza, the following may be mentioned;

Barbera × Rupestris; still in the experimental stage.

A hybrid of Berlandieri (from seed) obtained in 1888.

Another special hybrid of Berlandieri.

Solonis × Nebbiolo Cavazza No. 11.

Barbera × Rupestris Cavazza No. 2, of which the plants bearing the numbers 22, 26, 28, are the earliest and most prolific; they have a pale green foliage which recalls that of Gamay Couderc.

Barbera × Rupestris Cavazza No. 3.

Barbera × Rupestris Cavazza No. 4, which is somewhat susceptible to mildew.

Some hybrids Dolcetto × Rupestris bearing the numbers 5, 6, 7, 9.

Dolcetto × Jacquez No. 10, prolific, fairly resistant to mildew and oidium.

2) *Avellino (Campania), School of Vine-growing and Wine-making.* — At this School, under the directorship of Prof. Giulio Paris, Riparis, Rupestris, and Berlandieri plants have been obtained from American seed, but the Riparia plants have been specially selected as more adapted to the deep, light, and moist, volcanic soils of the region of Avellino and of a large portion of Campania. The selected Riparia have large entire leaves; these are glabrous on both surfaces, shining and slightly crinkled; they recall the types Gloires and Grand glabre. Some types obtained at Avellino are somewhat superior to the French types as regards vigour and

beauty of foliage. Their resistance has been the subject of experimental tests at Macomer in Sardinia. In 1890 the best plants of selected Riparia were crossed with Rupestris derived from seed; crosses were also begun between Rupestris and foreign vines (Malbec, Sirah, Cabernet, Pinot, Muscat violet etc.). In 1893 Italian-American hybrids of Sangiove, Malvoisie de Toscane, Aglianico, Sciascinoso, Aleatico, with Rupestris were obtained.

Finally in 1903 and 1904 vines selected in France were brought from the Tremiti Islands and hybridisation with American vines was given up. On the other hand crosses of various European vines among themselves were started with the object of obtaining better grapes, and among other hybrids the following were produced:

Trebbiano × Riesling du Rhin
Trebbiano × Pinot blanc
Trebbiano × Traminer blanc
Malvoisie × Sauvignon
Malvoisie × Riesling
Aglianico × Merlot
Aglianico × Cabernet
Aglianico × Pinot

3) *Cagliari* (*Sardinia*) *and Catania* (*Sicily*), *Schools of Vine-growing and Wine-making. Florence* (*Tuscany*) *School of Horticulture and Fruit-growing.* — From seeds imported from America some good types have been produced, which have given satisfactory results in those districts where they were obtained.

4) *Conegliano* (*Venezia*), *School of Vine-growing and Wine-making.* — From seedlings of Riparia, a Riparia tomentosa was selected which was extensively cultivated in the district of Conegliano; it gave such good results that some vineyards grafted on this plant are still found in full production after thirty years.

This type as well as other excellent types obtained from seed were given up when vine plants selected in France were imported. At the same time selections from cuttings of American and European vines were tried, and the method proposed by RAVAZ was employed as the basis of selection (*i. e.* the starch content of the cutting is determined by the iodine reaction) but these experiments were interrupted by changes in the staff of the school.

Twenty years ago some hybrids of Cinerea × Pagadebito were obtained; these were not devoid of interest but the experiment was not followed up.

DALMASSO, professor of vine-growing and wine-making, has at the present time extended the observations and researches on the adaption and affinity of the principal American stocks, and has taken up the work of hybridisation and selection conducting the latter according to the method proposed by RAVAZ.

5) *Grumello del Monte* (*Lombardy*), *School of Practical Agriculture.* — Some good types have been obtained from vines grown from seed, and

among these a Riparia glabre with large hardy leaves similar to those of Grand glabre may be noted; it is a suitable plant for the reconstitution of the vine-yards in some districts of the province of Bergamo.

## Work carried out by the Government nurseries for American vines.

1) *Nursery at Acqui (Piedmont).* — This nursery was only established in 1910 and has not yet produced plants which have been sufficiently tested. Three numbers of Berlandieri × Riparia obtained at Asti from seed of Berlandieri Resseguier No. 1 from France, have been selected. Some Italian-American hybrids obtained in the Asti Nursery have been planted permanently and kept under observation; these were as follows:

| | | |
|---|---|---|
| Lambrusca | × | Ruspestris du Lot |
| Lambrusca | × | Berlandieri |
| Grignolino | × | Berlandieri |
| Lambrusca | × | Berlandieri-Riparia 157-11 |
| Freisa | × | Rupestris du Lot |
| Barbera | × | Rupestris metallica |
| Cortese | × | Rupestris du Lot |
| Cortese | × | Rupestris-Berlandieri 301 B, |

These hybrids have up to the present remained exempt from phylloxera.

2) *Nursery at Asti (Piedmont).* — This nursery is no longer under government control and has been annexed by the anti-phylloxera association of the district. Selections of Riparia and Rupestris and of some other species have been made but the results are of little value.

Hybridisations were also carried out but they have not been continued. (See the above paragraph).

3) *Nurseries at Cagliari and at Macomer (Sardinia).* — For fifteen years these nurseries have cultivated some numbers of Riparia, of Rupestris, and of Berlandieri obtained from seed in the following institutions: School of Vine-growing and Wine-making of Avellino — School of Horticulture and Fruit-growing at Florence — Nurseries at Velletri and at Barletta; but these trials conducted in a single locality and in restricted areas are not yet conclusive. It is possible to state, however, that the plants are growing well and promise to be valuable.

4) *Nursery of Noto (Sicily).* — The director, Dr. C. Montoneri, has obtained two varieties of Rupestris: — Rupestris Noto No. 2, and Rupestris Noto No. 23, which are resistant to phylloxera, to drought and to large amounts of lime in the soil; they do well when used as cuttings and as grafts and have a marked affinity for the native vines, to which they give remarkable fertility. Prof. Di Mattei, in his report to the Congress of Noto in August 1914, advised the use of these two Rupestris in the place of Rupestris du Lot which is very liable to "bramble-leaf" (roucet), and predisposes the vine to abortion of the flowers.

Rupestris Montoneri No. 1 and No. 2, which are also cultivated, are both extremely promising.

Numerous experiments in hybridisation have been made but definite results with regard to the hybrids obtained cannot yet be given.

5) *Nursery of Palermo (Sicily).* – The Director, Dr. FEDERICO PAULSEN, has obtained several thousands of hybrids and has carefully selected them after several years of cultivation. As Dr. PAULSEN himself observes, it is difficult to find a stock which is able to offer identical advantages in the various conditions of cultivation, and these hybrids have therefore been tested in the experimented vineyards of the nursery and in those of private vine-growers. In some cases plots were planted with free stocks grafted on the spot, and similar plots with stocks grafted elswhere, and then permanently planted.

Of the hybrids bearing the numbers 1 to 1450, those which have given the best results in the first trial as regards resistance to phylloxera, luxuriance of vegetation and affinity for the local vines Inzolia and Pericone are:

| | | |
|---|---|---|
| Mollacchina | × | Rupestris 401 |
| Perricone | × | Rupestris 417 |
| Berlandieri Catania | × | Catarratto 737 |
| Berlandieri Catania | × | Riparia 810 |
| Catarratto | × | Rupestris Ganzin 877 |
| Mollacchia | × | Rupestris 403 |
| Berlandieri 2 | × | Rupestris Monticola 782 |
| Ciminnita | × | 1202, bearing the number 1056 |
| Catarratto | × | Rupestris du Lot 1072 |
| Catarratto | × | Rupestris du Lot 1074 |
| Berlandieri | × | Rupestris du Lot 1163 |
| Jacquez | × | 1202, bearing the number 1256 |
| Berlandieri 1 | × | Aramon-Rupestris 1330 |
| Berlandieri 1 | × | Rupestris Martin 1341 |

It was found as the result of numerous observations made under various conditions that a different stock was required for each kind of soil and often for each kind of scion. Dr. PAULSEN states in this connection that the difference in adaptive qualities between the various stocks become more evident as the conditions of reconstitution become more difficult. In the southern districts, where the two main factors which hinder replanting with American vines are drought and the intensity of the phylloxera pest, the choice of stocks should be made with special care, and should be suited to the frequent changes in the nature of the soil and in the climatic conditions.

At the present time among the thousands of hybrids produced and extensively tested by Dr. PAULSEN the following numbers may be recommended:

P. 1043 (Berliandieri × Aramon Rupestrs) and P. 1341 (Berlandieri × Rupestris Martin) are very suitable for light, sandy calcareous soils with a tufaceous and strongly calcareous sub-soil. In the experimental vineyard of Casa Bianca (Marsala) Number 1043, though it grows but moderately as a free stock, bears vigorous scions which make a throughly good growth even in the driest years. Number 1341 has always retained its

fine vegetation and the scions have always given a good and constant production.

P. 779 (Catarratto × Berlandieri) is very suitable for light sandy or calcareous soils and continues to do well in the experimental vineyard of Casa Bianca. It has given the most satisfactory results on deep loam soils which are not too dry (experimental vineyard of Spadafora) ; in such conditions it grows freely and bears productive scions.

P. 1548 (Berlandieri × Aramon Rupestris) has a normal development and a normal and constant productivity on deep loam soils which are very compact (experimental vineyard of Roccazzo). In the experimental vineyard of Mazara on a light, calcareous soil with a compact and strongly calcareous sub-soil this number shows a fine vegetative growth after three years both as a free stock and as a graft.

1742 (Berlandieri × Rupestris du Lot) and P. 1902 (Catarratto × Rupestris du Lot) are well adapted to deep, compact, loams, like those of Roccazzo, where they have done well for several years.

Riparia × Rupestris N° 2 A, selection P, has been derived from the selection of plants obtained from seeds of Rupestris. It is easily propagated by cuttings, develops rapidly and gives a luxuriant vegetative growth.

It grafts successfully and produces fruitful plants. It is specially suitable to medium loams which are not very compact but fairly deep and moist.

6) *Nursery at Palmi and at Nicastro* (*Calabria*). — The reproduction of some Riparia plants from seed and the formation of Calabrian-American hybrids has been started, but it is not yet possible to give the results of the work.

7) *Experimental vineyard of Spadafora* (*Sicily*). — At Syracuse the late Prof. ANTONIO RUGGERI, with the assistance of Cavaliere BENIAMINO ANTOCI, began to select American vines grown from seed, especially plants of Berlandieri : he also began to cross Berlandieri, and Rupestris du Lot, with some of the most popular local vines. When transferred to Milazzo, he took with him young plants produced at Syracuse and continued and extended the work of hybridisation. As the nature of the soil of the nursery at Milazzo did not allow him to undertake conclusive trials, he established an experimental vineyard at Spadafora. Here he brought to a successful termination some experimental trials worthy of mention, both with vines due to his own efforts and with those produced by GRIMALDI and PAULSEN as well as with some types of Berlandieri selected at Barletta. Trials were also carried out in private vineyards on various types of soil infested with phylloxera ; the soil was in some cases clayey and compact, in others of medium consistancy and fertile, or again light and poor. It is, in consequence, possible to bring together observations which indicate that certain vines tested over long periods, are suitable for introduction into general cultivation. The introduction of such vines is of special importance, as the decay of the vineyards reconstituted with stocks from beyond the Alps has shown the necessity of reconstitution

with indigenous vines which are more suitable to the soil and climatic conditions of Italy.

Out of Sicily the hybrids due to RUGGERI have been grown with excellent results in Apulia, in Calabria and in other countries than Italy. At the International Congress of Agriculture at Madrid (1911), M GARCIA DE LOS SALMONES recommended from his personal experience twelve numbers of this hybrid for cultivation on dry calcareous soils. A collection of these hybrids has been sent to Algeria at the request of Prof. MARÈS who had ascertained their success in Sicily.

Among the numerous hybrids produced by RUGGERI the following may be noted :

130 (Berlandieri × Rupestris). — This hybrid is adapted to various types of soils, including soils light in colour and thoroughly calcareous in character on which it has given good results.

42 (Berlandieri × Rupestris du Lot). This hybrid does well over a fairly extensive area. It grows freely on moist marls even on those rich in lime (50 to 60 per cent Ca Co3). It is not always as resistant as 140 and cannot be recommended for clay soils on which it develops but moderately.

199, 225, 267 (Berlandieri × Riparia). These vigorous hybrids maintain the productivity of the scion at a high level and are suitable for cultivation over a fairly extensive area, especially 199 and 225. The last number, 267, prefers the same soils as Riparia and on them it surpasses the pure species, but it is also successful on soils of poorer quality. Although vigorous 199 and 225 are not equal to 267 on soils which are suitable for the latter but they are more resistant to drought and will tolerate larger amounts of lime in the soil.

19 (Albanello × Berlandieri). The resistance to phylloxera of this hybrid is very great : after 10 years of cultivation its roots are in as good condition as those of the most resistant pure species. It has a marked affinity for the native vines and as it is tolerant of drought and of a large amount of lime, it does well over a fairly extensive area. The production of plants grafted on this stock is regular and constant.

8) *Nursery of the Tremiti Islands (Adriatic)* (1). — No selections of plants grown from seed have been made but hybrids have been produced between American vines (Rupestris and Berlandieri) and numerous Italian vines (Trebbiano, Sangiovese, Malvoisie, Moscatello, etc). Some of these hybrids have already been tested in different provinces of Italy especially in Apulia. The tests, however, have not yet been carried out for a sufficiently long period to justify statements on these hybrids. Hybrids between various American vines have also been obtained but they are not altogether satisfactory, especially in regard to their adaptive qualities.

9) *Nursery at Velletri (Rome)*. — The Director Professor ANGELO LONGO has selected 40 numbers of Riparia and 11 of Rupestris grown from seed. These vines have been distributed in various districts espe-

(1) See *B.* 1914, No. 246.

cially in Tuscany, in Apulia, in Sicily and in Sardinia. In many cases the results have been satisfactory, both as regards resistance to phylloxera and drought, and as regards vigour of growth and productivity. This, however, has not always been the case. For example in Tuscany, in the valley of the Arno and on the plains of Prato and Pistoia, where quaternary soils occur, these vines have given excellent results: on the other hand they have given less satisfactory ones in the following districts: in Chianti and in the valley of the Sieve where gravels intercalated in the calcareous "alberesi" of the Eocene are abundant: on the hillsides of the Upper Valdarno and of the valley of Greve, where marly calcareous soils and cretaceous gravels occur: in the valleys of Elsa and Pisa where clayey marls alternate with the conglomerates, gravels and sands of the Oligocene. In Apulia and Sicily and in Sardinia the results have in the same way been excellent in some regions and poor in others. At Marsala, for example, on soils with as much as 85 % per cent of lime, the director of the local anti-phylloxera association considers that the results have been satisfactory.

## Work of the Anti-Phylloxera Associations.

These associations were instituted with the object of protecting vine-growing against the attacks of phylloxera. They were first formed in Apulia and later in all Italian districts where such action was necessary, and aim, by the introduction of America vines, to reconstitute the vineyards destroyed by this terrible pest. The associations, directed by technical experts, have also undertaken experimental work in selection and hybridisation, with the object of obtaining stocks suitable to the districts in which they are to be cultivated. The initial work of these experiments was undertaken by the late Prof. Neobaldo Danesi, general inspector of agricultural industries, assisted by the technical representatives of the anti-phylloxera societies and especially Dr. Armando Mignone as well as by the director of the Experimental Nursery of the Tremiti Islands.

Numerous crossings were made between the local vines, of which the best as regards hardiness and longevity were chosen, and such American vines as lent themselves to the process: (Rupestris Martin and Rupestris Metallica Berlandieri and its hybrids Riparia and Rupestris). Attempts were also made to cross certain American vines among themselves, such as: Rupestris Ganzin, Rupestris Martin, Rupestris Gaillard, Rupestris du Lot, Cordifolia typique and Cordifolia Davin, Aestivalis, Berlandieri, all calcicole (lime-loving) vines. Definite results have not yet been obtained but it can already be foreseen that the societies, in following up the work in which they are engaged, will be able shortly to provide for each district stocks and possibly direct bearers thoroughly acclimatised and very resistant to phylloxera. It is expected that these plants will show adaptive qualities, possess a strong affinity for the local vines, and will be capable of giving better results in practical cultivation than the vines commonly employed to-day.

To test the hybrids obtained by Danesi and by the staff of the anti-

phylloxera associations, *two fields for experiments on the resistance of American vines to phylloxera were instituted in Apulia.* These fields are in the district of Cassano Murge and of San Michele which in Apulia were among the first to be attacked by the destructive insect. Hybrids obtained by Cavaliere BENIAMINO ANTOCI in the Tremiti Islands, are also studied in these experimental fields.

In addition to resistance to phylloxera, the composition of the grapes of the direct bearers is being studied : this task was entrusted by DANESI to the School of Olive-growing and Oil-making at Bari.

The experiments made at Marsala by Cavaliere GIUSEPPE VAIARELLO, director of the Anti-phylloxera Society of that locality, are also of sufficient interest to be mentioned. In the nurseries of the association the Sicilian-American hybrids of PAULSEN and GRIMALDI and RUGGERI have been tested. The numbers 88, 110 and 317 of GRIMALDI, the numbers 110, 128, 140 and 298 of RUGGERI, and the numbers 779, 1120, 1381, 1548, 1742 and 2A of PAULSEN are specially worthy of consideration. A hybrid which is also expected to do well is Calabrese × Aramon-Rupestris 953, a direct bearer obtained by GRIMALDI.

M. VAIARELLO has also undertaken work on hybridisation, but it would be premature to pronounce judgment on the results obtained.

## WORK CARRIED OUT BY PRIVATE VINE-GROWERS.

Some private nurserymen have selected American vines grown from seed, and some of the vines placed by them on the market have given fairly good results in the districts in which they were obtained. However as regards continued and serious work based on scientific principles, only that of the late Dr. CLEMENTE GRIMALDI of Modica can be considered, and to him are due some hybrids which have been successfully introduced into general cultivation. From the beginning of his short career this distinguished worker was actively and usefully employed, thanks to his technical skill, in the production of hybrids suitable for warm districts. Important observations on American vines in general, which he was able to make during the course of his researches, are still turned to advantage by a certain number of Italian and other growers of American vines.

Although the work of Grimaldi was unfortunately interrupted by his early death, the vine growers have been able to profit by his labours to some extent, thanks to certain hybrids of special interest among which the following may be mentioned.

G. 1257 (Berlandieri × Regano). This hybrid is suitable for strongly calcarious soils. It has given good results at Mazzara del Vallo and at Casa Bianca (Marsala) where it has developed remarkably well in spite of the nature of the soil ; calcareous, somewhat poor, and dry.

G. 444 and 446 (Berlandieri × Rupestris). Up to the present these hybrids have made good growth on calcareous soils.

G. 110 and 88 (Calabrese × Rupestris Ganzin) and 317 (Frappato × Rupestris Ganzin). These hybrids are adaptable within wide limits but

they give the best results on strong and light loams. They show well marked affinity for the Marsala vines but are liable to " bramble-leaf " (roncet) by which they have been attacked in several experimental vineyards in Sicily.

G. 953 (Calabrese × Aramon Rupestris). This hybrid is a direct-bearer and has given at Marsala on moist calcareous soils a good wine with the proportions 16.2 per cent alcohol and 7 per cent of acidity (VAIARELLO).

## CONCLUSIONS.

From this brief account the following conclusions can be drawn :

1) The new resistant vines which are necessary for the reconstitution of vineyards destroyed by phylloxera can be obtained (and have already been partly obtained) by the selection of American vines grown from seed, and by the artificial hybridisation (followed by selection) of various American vines partly among themselves and partly with European vines. It was a mistaken policy to interrupt the work which had been started on these lines, and to resort to the use of hybrids and selected plants imported from France. Indeed it is due to the clear-sightedness of some workers on American vines (RUGGERI, PAULSEN, GRIMALDI, LONGO) that good plants produced and selected in Italy can be put into cultivation today.

2) Experience acquired during a number of years has shown clearly that vines obtained and selected in France will not always live under conditions different from those of the country of their origin, as in Sicily, Sardinia, Calabria, and Apulia. The introduction of these French vines into Italy was in many cases unsuccessful and consequently the workers on American vines turned their attention once more to the production and the study of indigenous resistant vines. It was a judicious action on the part of the Ministry of Agriculture in 1914 to direct that the institutions under Government control should resume the work interrupted some years previously.

3) The work of PAULSEN, GRIMALDI and RUGGERI, can be put to profitable account to-day, for the hybrids due to them can, especially in warm districts, replace the vines produced and selected in France. In other districts it is unnecessary to give up French vines entirely, but the Riparia and Rupestris selected by LONGO at Velletri, besides the hybrids of PAULSEN can, with advantage, be introduced into general cultivation.

SECOND PART.

# ABSTRACTS

## AGRICULTURAL INTELLIGENCE

### GENERAL INFORMATION.

DEVELOPMENT OF AGRICULTURE IN DIFFERENT COUNTRIES

1057 – **Agriculture in Brittany.** — I. PIC, G. Monographie d'une exploitation modèle en Ille et-Vilaine. *La Vie Agricole et Rurale*, Year 6, No 27 (special number on Brittany), pp. 1-4. Paris, July 1, 1916. — II. PARISOT, F. Mise en valeur des dunes. *Id.*, pp. 5-7. — III. MIÈGE, E. La culture de l'ajonc *Id.*, pp. 13-16. — IV. MÉNARD, A. Culture de la pomme de terre de primeur dans les Cotes du Nord. *Id.*, pp. 18-20. — V. VINCENT, V. Cultures maraîchères et élevage du cheval combinés dans le pays de Léon *Id.*, pp. 20-22.

I. Small holdings of from 35 to 50 acres are the rule in the department of Ille-et-Vilaine, and farms of over 100 acres are rare. Much of the land is owned by peasant proprietors. The farm selected for description as being typical of the district is about 35 acres in extent, on gently undulating ground, and the soil is a strong loam on a clay subsoil. Many improvements have been carried out: the land has been drained; roads have been made and apple trees planted on either side of them; hedges have been removed, so that the farm now consists of 4 or 5 arable fields of 5 to 7 acres each, 5 acres of grass and 2 ½ acres of orchard. No fixed rotation is adopted, but as far as possible the annual acreage of crops and catch crops is distributed as follows:

| | | | | | |
|---|---|---|---|---|---|
| 7 ½ | acres | winter wheat | 4 | acres | green rye |
| 2 ½ | » | winter oats | 1 | » | trifolium |
| 2 ½ | » | spring » | 1 1/4 | » | vetches |
| 2 ½ | » | barley | 1 1/4 | » | maize |
| 2 ½ | » | buckwheat | 2 ½ | » | mangels |
| 5 | » | red clover | 1 1/4 | » | carrots |
| 2 ½ | » | rape | 1 1/4 | » | cabbages |
| | | | 1 1/4 | » | potatoes |

Besides this, all banks are planted with gorse which yields valuable fodder for horses and cattle in December and January. Thus the 30

acres of arable land not only produce about 30 acres of fodder and grain crops consumed on the farm but also an additional 10 acres of corn crops which are sold away. Average yields for the last 10 years have been:

| | | |
|---|---|---|
| wheat | 5 | qrs. per acre |
| oats | 7 | » » » |
| buckwheat | 5 | » » » |
| mangels | 28 | tons per acre |
| potatoes | 9 ½ | » » » |

The dead stock consists of 2 ploughs, 1 set of harrows, 2 cultivators, 2 horse hoes, 1 small horse drill, 1 mower with corn cutting attachment, 1 swath turner, 1 horse rake. The live stock consists of: (1) a dairy herd of 10 to 12 milking cows (also 3 or 4 heifers, 3 or 4 yearlings and 2 bulls) yielding from 22 ½ cwts. to 28 ½ cwts. of butter per annum and a gross profit of £120 to £165, besides 7 or 8 calves sold fat to the butcher for £20 to £24; (2) one old horse and 2 mares from which one foal is bred annually and sold; (3) about 50 hens and pullets of the de Janzé breed; and (4) a number of pigs.

The labour is provided by the farmer and his family, a maidservant and a man living in the house, and during the busiest seasons of the year additional men are occasionally hired by the day.

The returns of this type of holding are excellent in the majority of cases and where the farmers, who are generally industrious and fairly enlightened, have also been good business men and skilful cultivators, actual fortunes have been made out of the land.

II The sand dunes extend over many thousands of acres along the northern and southern coast of Brittany. They are covered by a meagre vegetation consisting chiefly of couch grass, sand sedges, small fescues, sweet vernal, cock's foot and timothy, with occasional clumps of furze, *Ephedra*, asparagus, various medicks, bracken, wild beet, and here and there a pine wood. The dunes are usually either State owned or the property of the communes. In certain parts they have been successfully reclaimed as for instance at Rothéneuf near St. Malo where early vegetables are now grown at a profit, at Roscoff, at Saint-Paul-de-Léon and at Plouhinec near Lorient which is celebrated for its early carrots.

The work of reclamation should always start with ploughing to a depth which varies with the flora. Liming and chalking are useless at the initial stage, but farm yard manure or seaweed must be applied with dressings of superphosphate and potash salts. Levelling should be carried out as far as possible. The most important question is that of protection against wind. In points of extreme exposure *Atriplex*, tamarisk, sea-buckthorn or gorse should be used as wind screens, while white poplar, *Cytisus*, elm and the maritime fir may also be employed with profit. With regard to wind resistant crops the best results have been obtained with rye and cabbages. Once the land is under cultivation, early potatoes, green rye, crimson clover and winter barley may be grown as well as asparagus and lucerne. After the early potatoes, green rye, etc... cabbages, mangels,

carrots and salads or carrots and swedes, turnips, mustard should be taken, as the land will produce two good crops per annum if generously manured.

Its vicinity to the sea-shore makes this possible as the necessary seaweed can thus be obtained at low cost.

III. Gorse is a characteristic wild plant of all granitic or schist soils. About 15 species are known including *Ulex europaeus*, *U. Gallii*, *U. Richteri*, *U. nanus*, *U. parviflorus*, and the two chief cultivated varieties are the Dinan and the Foxtail which is almost spineless. Gorse not only yields valuable fodder, but affords shelter and may also be used as litter or for green manuring. It has also been suggested as raw material for paper-making. As fodder it may be fed to all kinds of stock and cattle do particularly well on it either when fattening or producing milk.

For its growth a good tilth is required and the land must be clean. Seed may then be broadcasted at the rate of 18 lbs. per acre or drilled at the rate of 9 lbs. per acre as is customary in England. Average yields run from 10 to 12 tons of green stuff per acre which would be equivalent in feeding value to 4 to 5 tons of good hay. Exceptional yields are said to reach 20 to 24 tons per acre. Seed may also be harvested and amounts to 80 to 120 lbs. per acre of the common varieties (worth 10*d*. per lb.) or 40 to 50 lbs. of Foxtail (worth about 1*s* 3*d* per lb.).

Gorse leaves considerable residues of nitrogen in the soil and its deep roots break up the subsoil to a great depth. Plantations are easily broken up even after being kept down from 6 to 8 years which is the usual duration of their life ; some however are kept down as long as 15 to 20 years.

IV. The cultivation of early potatoes occupies an entire tract of coast land known as "the golden belt of Brittany" where the climate is specially favourable. The most popular varieties are Royal Earlies (frost resistant), Mayette, Sutton, Giant Fluke, Fin de Siècle. Sets are carefully selected and sprouted in boxes or on floors during the autumn. Planting out begins at the end of January and the sets are placed very close together (10 in. × 14 in.), so that about 18 cwts. of seed potatoes are required per acre. Yields are high, the total crop varying from 4 to 6 tons per acre and being worth anything from 3*s* 6*d* to 12*s* per cwt. In an average year the gross profits run from £24 to £32 per acre, but the crop is an expensive one to grow and would hardly pay if it were not for the fact that the potatoes can be followed by mangels, swedes, cabbages or cauliflowers and then by two successive corn crops without any further manuring.

V. The Léon district is not a purely market gardening district except in the Roscoff commune. Elsewhere the market gardening is run together with a horse breeding industry and fodder crops have to be provided for the live stock. Though modified for the special requirements of these farms, the principles of market gardening still obtain and the crops are rarely grown pure. For instance parsnips are interplanted with cauliflowers or artichokes, onions with parsnips, artichokes or cauliflowers, and cauliflowers harvested in February would be followed by spring wheat in

which lucerne would be sown, or trifolium might be taken after the wheat. A typical rotation is given below

1st year : spring wheat and turnips as a catch crop.

2nd year : parsnips with cauliflowers or artichokes.

3rd year : wheat or onions and trifolium.

4th year : cauliflowers.

The chemical requirements of such a rotation are considerable and even assuming that very heavy dressings of seaweed and farm yard manure are available, these should be supplemented by applications of fertilizers

AGRICULTURAL INSTITUTIONS

1058 – **Blind Soldiers on the Land.** — BARONNE THÉNARD, A. (Note from the Valentin, Haüy Association) in *Comptes Rendus des Séances de l'Académie d'Agriculture de France*, Vol. II, No. 21, pp. 595-602. Paris 1916.

Ever since the beginning of the war the Valentin Haüy Association has undertaken the task of helping blind soldiers to earn their own livelihood and whenever it has been possible they have put such soldiers back to their old pre-war trades and occupations. On this principle large numbers of blind men should have been brought back to the land. The Association was already in touch with several men who were successful farmers, poultrymen or bee-keepers in spite of having lost their sight, as for example the owner of a vineyard in Franche-Comté who though he became blind at the age of forty kept on working for many years. Another had been taught a trade specially adapted to the blind (straw and cane work), but preferred an agricultural occupation and rapidly became a skilful labourer. The latter man was an immense help to the Association, for his case could be quoted to the blind soldiers and it could be pointed out to them that they had the advantage of being already familiar with farm operations. He was even charged in July 1915 to go round to the homes of blind soldiers and to show them by his practical example what could be accomplished without sight, to encourage them to be self-reliant, and to induce them to try to pick up the threads of their old life.

The results of this policy have been excellent : one man has gone back to an employer for whom he had previously been working for nine years, and has regained much of his old skill ; another man, besides going back to his original work, has taken charge of 50 beehives to which he attends mostly at night ; a third man who is not only blind but also suffers from slight deafness and a certain weakness in the right arm has taken up the management of a farm again and works himself in the garden and at pruning vines. All show remarkable pluck ; but even the most able man when deprived of his sight is largely at the mercy of his surroundings and could accomplish little without the help and sympathy which are most surely found amongst his own people.

The Valentin Haüy Association is establishing a small poultry farm for blind soldiers, as experiment have recently shown in England that chicken rearing and fattening is work particularly well adapted to the blind.

## CROPS AND CULTIVATION.



1059 – **Measurement of the Surface Forces in Soils.** — SHULL, CHARLES ALBERT, in *The Botanical Gazette*, Vol. LXII, No. 1, pp. 1-31, 8 tables, 5 figs. Chicago, July 1916.

A contribution to our knowledge of the mechanics of soil moisture and the relations of this latter to plant growth. The main purpose of the work was to find some means of measuring the force with which particles of soils of varying fineness retain moisture at different degrees of dryness and to obtain some more definite knowledge concerning the amount of "back pull" occurring in soils when the total moisture content is so low as to be unavailable to growing plants. A number of experiments were carried out on the relation of seeds to soil moisture, an aspect of the question which hitherto has not received the attention it deserves.

The *seeds* of *Xanthium* were chosen for the experiments owing to the rapid re-establishment of moisture equilibrium relations after disturbance. They were derived from 119 plants derived in their turn from the seed of a single plant of *X. pennsylvanicum*; individual variations should therefore be reduced to a minimum.

The *soils* used in the major portion of the work were 1) *the subsoil of the Oswego silt* loam — a heavy clay — and, as a contrast to this, 2) *a fine quartz sand* manufactured from quartz rock and, finally, 3) *various other soil types*, details of which appear in table IV. The average composition of No. 1 as determined by mechanical analysis was as follows:

| Sand | | | | Silt | Clay |
|---|---|---|---|---|---|
| Coarse | Medium | Fine | Very Fine | | |
| 0.4 % | 0.5 % | 4.4 % | 3.2 % | 61.3 % | 30.4 % |

The moisture equivalent was 35.2 per cent and the wilting coefficient 19.1 per cent.

No. 2 was a very pure quartz sand, the average diameter of the particles being very close to 0.10 mm. The moisture equivalent was 2.41 per cent and the wilting coefficient 1.3 per cent.

*Methods.* — While the internal forces of *Xanthium* seeds have been approximated by osmotic means, many seeds lack semi-permeable coats. For such seeds a vapour pressure method has been used which gives results which are in a way comparable to the osmotic measurements. It consists essentially in measuring the vapour pressure equilibrium of the air-dry seeds over sulphuric acid of varying strength and calculating the internal pressure of the seed from the vapour pressure of the solution over which it was found

TABLE I. — *Moisture intake of Xanthium seeds in osmotic solutions; temperature 23.5° C; intake in percentage of air-dry weight.*

| Solutions volume molecular | 1 hour | 4 hours | 7 hours | 10 hours | 24 hours | 48 hours | Osmotic pressure in atmospheres |
|---|---|---|---|---|---|---|---|
| $H_2O$ | 16.39 | 44.38 | 48.78 | 50.38 | 51.18 | 51.58 | 0.0 |
| 0.1 M — Na Cl | 16.79 | 39.43 | 45.87 | 46.48 | 46.39 | 46.33 | 3.8 |
| 0.2 M — Na Cl | 17.12 | 38.67 | 45.00 | 45.57 | 45.93 | 45.52 | 7.6 |
| 0.3 M — Na Cl | 16.07 | 34.05 | 40.75 | 41.95 | 42.24 | 42.05 | 11.4 |
| 0.4 M — Na Cl | 14.36 | 31.21 | 38.08 | 39.97 | 40.33 | 40.27 | 15.2 |
| 0.5 M — Na Cl | 13.96 | 30.26 | 35.87 | 38.08 | 38.70 | 38.98 | 19.0 |
| 0.6 M — Na Cl | 13.80 | 25.57 | 32.41 | 33.57 | 34.77 | 35.18 | 22.8 |
| 0.7 M — Na Cl | 13.32 | 26.29 | 30.99 | 31.73 | 32.79 | 32.85 | 26.6 |
| 0.8 M — Na Cl | 13.13 | 25.22 | 29.21 | 29.95 | 31.12 | 31.12 | 30.4 |
| 0.9 M — Na Cl | 12.58 | 24.34 | 27.64 | 28.95 | 29.14 | 29.79 | 34.2 |
| 1.0 M — Na Cl | 11.90 | 22.92 | 25.42 | 26.48 | 26.21 | 26.73 | 38.0 |
| 2.0 M — Na Cl | 8.19 | 14.55 | 18.25 | 18.43 | 18.60 | 1855 | 72.0 |
| 4.0 M — Na Cl | 4.81 | 8.37 | 9.84 | 10.08 | 11.00 | 11.76 | 130.0 |
| Sat. — Na Cl | 3.42 | 4.94 | 5.24 | 5.84 | 6.21 | 6.35 | 375.0 |
| Sat. — Na Cl | — 0.67 | — 0.77 | — 0.58 | — 0.58 | — 0.58 | — 0.29 | 965.0 |

to be in equilibrium. Though by no means exact the calculations are near enough to the osmotic determinations to be of great interest.

The earliest soil measurements were made with No. 2) sand. Seeds of known weight were packed firmly in sand of known water content in paraffined wire baskets, and allowed to come to equilibrium. The tests were confined finally to the region of soil moisture from air-dry to the wilting coefficient, because with a higher moisture content the seeds always became saturated with water. In the case of this sand it was not until the water content was reduced to about 1 per cent that a noticeable "back pull" was developed by the soil.

This method is obviously open to the criticism that friction retards the movement of water in dry soils, and that the seeds therefore do not reach actual equilibrium with the total soil mass, but only with the soil lying near them. In order to meet this difficulty, a rotation method (bottles arranged on rotating wheels driven by a motor) was adopted which brings the seeds constantly into contact with fresh soil particles.

TABLE II. — *Relation of Soil Moisture to Intake by Seeds.*

| Soil moisture in percentage of absolute weight | Intake by seeds in percentage of air-dry weight | Osmotic pressure equal to surface force in atmospheres |
|---|---|---|
| 4.65 (air-dry) | — 0.53 | |
| 5.83 (air-dry) | 0.00 | Li Cl saturated = 965 atmospheres. |
| 5.95 (air-dry) | + 0.38 | |
| 6.66 (air-dry) | 0.97 | |
| 6.15 . . . . | 1.58 | |
| 6.23 . . . . | 1.91 | (697)* |
| 6.46 . . . . | 1.06 | |
| 7.61 . . . . | 3.73 | (532) |
| 7.85 . . . . | 3.35 | |
| 7.88 . . . . | 3.68 | |
| 8.27 . . . . | 5.18 | |
| 8.68 . . . . | 6.16 | (418) |
| 8.92 . . . . | 6.25 | |
| 9.16 . . . . | 6.55 | |
| 9.36 . . . . | 6.47 | Na Cl saturated = 375 atmospheres. |
| 10.26 . . . . | 9.58 | |
| 10.32 . . . . | 10.76 | |
| 10.81 . . . . | 9.81 | |
| 11.16 . . . . | 10.82 | |
| 11.60 . . . . | 15.79 | |
| 11.79 . . . . | 11.94 | 4 M. Na Cl = 130 atmospheres. |
| 12.46 . . . . | 15.81 | |
| 12.74 . . . . | 17.46 | |
| 13.16 . . . . | 21.36 | 2 M. Na Cl = 72 atmospheres. |
| 13.91 . . . . | 21.11 | |
| 14.23 . . . . | 23.88 | |
| 14.78 . . . . | 20.62 | |
| 14.88 . . . . | 28.61 | M. Na Cl = 38 atmospheres. |
| 15.18 . . . . | 32.60 | |
| 15.34 . . . . | 31.54 | |
| 16.06 . . . . | 34.00 | M. $C_{12}H_{12}O_6$ = 22.4 atmospheres. |
| 16.75 . . . . | 33.86 | |
| 17.10 . . . . | 37.70 | 0.5 M. Na Cl = 19 atmospheres. |
| 17.12 . . . . | 41.98 | 0.4 M. Na Cl = 15.2 atmospheres. |
| 17.35 . . . . | 39.77 | |
| 17.93 . . . . | 43.25 | 0.3 M. Na Cl = 11.4 atmospheres. |
| 18.07 . . . . | 41.79 | |
| 18.07 . . . . | 45.15 | 0.2 M. Na Cl = 7.6 atmospheres. |
| 18.87 . . . . | 47.26 | 0.1 M. Na Cl = 3.8 atmospheres. |
| 19.34 . . . . | 49.31 | |
| 19.71 . . . . | 43.79 | |
| 19.80 . . . . | 46.54 | |
| 10.04 . . . . | 50.00 | |
| . . . . . | 51.44 | Saturated = 0,00 atmospheres. |

* Values in parenthesis calculated from the curve of moisture-holding power of the soil as determined by the known value.

## Experimental Results.

A. *Measurement of the Seeds.* — The data resulting from the measurement of the internal forces of *Xanthium* seeds by means of NaCl and LiCl solutions are given in Table I and these figures may serve as a basis in the soil experiments, where the surface forces of the soil particles, instead of osmotic pressure are pitted against the internal forces of the seed.

B. *The Surface forces of Soils.* — *Soil No.* 1. The results of 4 of a number of tests made with the subsoil of the Oswego silt loan mentioned above are shown in Table II.

*Soil No.* 2. — The results af a series of tests with the fine quartz sand running from air dry (0.14 per cent) to a little beyond the wilting coefficient (1.3 per cent) are shown in Table III.

Table III. — *Relation of moisture in No.* 2 *Quartz Sand to Moisture Intake of Xanthium seeds*

| Soil $H_2O$ in percentage of absolute weight | Intake $H_2O$ in percentage of air-dry weight |
|---|---|
| 0.14 (air-dry) | — 0.306 |
| 0.159 | 1.407 |
| 0.175 | 5.02 |
| 0.203 | 21.81 |
| 0.44 | 33.98 |
| 0.81 | 42.40 |
| 1.03 | 45.64 |
| 1.49 | 47.46 |
| 1.79 | 52.06 |
| 2.14 | 72.85* |

* Four seeds showing incipient germination, hypocotyls averaging 3 mm. long.

*Various soil types.* — The foregoing results suggested that there might be a general relationship between soils and seeds as regards the amount of moisture seeds will absorb at the wilting coefficient of the soil, whatever value the wilting coefficient might have. To clear up this point the soil types of Table IV were used. Each soil was brought as nearly to the wilting coefficient as possible by addition of water.

TABLE IV. — *Relation of wilting coefficient to moisture intake by seeds*

| Soil types | Percentage of hygroscopic moisture | Percentage of wilting coefficient | Percentage of soil $H_2O$ | Percentage of seed intake |
|---|---|---|---|---|
| 1. Sand (coarse) . . . . . | 0.205 | 0.73 ± 0.02 | 0.65 | 34.44 |
| 2. Loam . . . . . | 3.130 | 12.93 ± 0.05 | 12.66 | 49.02 |
| 3. Sandy loam (very fine). | 1.836 | 8.33 ± 0.08 | 7.86 | 48.38 |
| 4. Loam . . . . . | 2.280 | 12.41 ± 0.02 | 13.30 | 49.01 |
| 5. Clay loam . . . . . | 3.820 | 16.12 ± 0.01 | 16.01 | 49.49 |
| 6. Clay loam . . . . . | 5.210 | 16.34 ± 0.02 | 17.78 | 47.31 |
| 7. Fine sand . . . . . | 0.750 | 3.21 ± 0.03 | 3.19 | 49.77 |
| 8. Sand (coarse). . . . . | 0.218 | 0.83 ± 0.01 | 0.80 | 40.98 |
| 9. Loam . . . . . | 2.30 | 10.82 ± 0.06 | 10.51 | 50.42 |

## CONCLUSIONS.

1) The force with which the seeds of *Xanthium pennsylvanicum* absorb water has been measured by two methods: (*a*) osmotic solutions, and (*b*) vapour pressure equilibrium. The osmotic method is at present the more reliable.

2) The air-dry seeds of *Xanthium* show an initial attraction for water of nearly 1 000 atmospheres.

3) The attraction which exists at any moisture content of the seed between air-dry and saturation can be approximated. See Table I.

4) The seeds have in turn been used to measure the complex moisture-holding forces of soils, with the following results:

*a*) The air-dry subsoil of the Oswego silt loam holds its hygroscopic moisture with about the same force as an air-dry seed, that is, about 1 000 atmospheres.

*b*) As the moisture content of the soil increases, the surface force decreases rapidly. When about 3.5 per cent of water has been added to the air-dry soil, the force remaining is about 395 atmospheres. When the soil moisture reaches 6 per cent above air-dry in this soil, the moisture is held with a force of 130 or more atmospheres. At 11 per cent above air-dry the holding power has fallen to 22.4 atmospheres.

*c*) At the wilting coefficient of the soil (13.3 per cent above air-dry in the Oswego silt loam subsoil) the "back pull" of the soil particles amounts to not more than that of a 0.1 M Na Cl solution, that is, not more than about 4 atmospheres. This is shown to hold true for a number of types of soil with widely varying wilting coefficients.

5) This water-holding power of soils at the wilting coefficient is less

than the osmotic pressure of the root hairs of many kinds of plants, as shown by HANNIG and others.

6) The wilting of plants at the wilting coefficient of the soil cannot be due to lack of moisture in the soil, nor to lack of a gradient of forces tending to move water toward the plant.

7) The view is held, therefore, that the wilting at this critical soil moisture content must be due to the increasing slowness of water movement from soil particle to soil particle, and from these to the root hairs, the rate of movement falling below that necessary to maintain turgidity of the cells of the aerial parts, even under conditions of low transpiration.

1060 – **The Treatment of Peat Beds to Prevent Loss of Nitrogen Due to Bacterial Activity (Germany).** — ARND, T. in *Landwirtschaftliche Jahrbücher*, Vol. 49, No. 2, pp. 191-213. Berlin, March 25, 1916.

At the Bremen station for peat investigations, experiments were carried out to determine whether denitrification and the decomposition of nitrates in peat beds could be prevented. The problem was attacked by two methods: (1) soil conditions were made such as to encourage nitrification and processes favourable to plant growth; and (2) the reduction of nitrates was inhibited by the use of germicides. By the first method denitrifying organisms alone were affected while by the second method the destruction of both denitrifiers and nitrate reducers was involved.

1*st. method.* — The soil used was from a well rotted peat bed, crumbly and rich in bacteria. On analysis it proved to contain fair quantities of ammonia and traces of nitrates, but no nitrites. The sample was put through the 3mm. sieve and mixed with pure calcium carbonate at the rate of 0.3 gm. of carbonate to 40 gms. of soil (these proportions having previously been shown to produce maximum nitrogen losses). The soil was watered to bring it up to its original water content and placed in glass vessels in layers 0.8 cm., 3 cms., and 9 cms., thick; 0.5 gm. of dry nitrate was added to each vessel which was then plugged with cotton wool and incubated for a fortnight at 28° C. The amount of denitrification which had taken place was then determined.

The results showed conclusively that denitrification varies with the depth of the soil layer in the vessels, *i. e.* with the amount of oxidation which can take place. In other words, the greater the relative surface exposed to the air, the more are the oxygen needs of the soil bacteria satisfied and the smaller the loss of nitrogen and the reduction of nitrates. The mean total loss of nitrogen for the three layers 9 cm., 3 cm., and 0.8 cm. were 17.8 mgms., 2.1 mgms, and 3.8 mgms. respectively. Where the soil was very loosely packed, no denitrification took place, but in other cases even thin layers of less than 1 cm. thickness showed losses of nitrogen, and it may be concluded that under field conditions where the soil could never have such a large surface exposed as in these experiments, denitrification could never be completely prevented.

In practice, therefore, tillage and drainage of peat soils may be always recommended in order to minimise denitrification, but some losses must always be expected from that cause.

*2nd. method.* — In the series of experiments where germicides were used, the same apparatus was employed, but the soil layers were uniformly 9 cms. thick. The germicides were mixed with the soil in the dry state or in solution at the rate of 25 to 200 mgms. per 60 to 70 gms. of soil (contaning 80 per cent of water).

*Copper sulphate.* — Even with the maximum doses of 0.2 gm. $CuSO^4$ $5H^2O$ per 12 gms. of dry soil, losses of nitrogen were not completely avoided. With the small doses, denitrification was intensified. This unexpected behaviour on the part of copper sulphate was probably due to the fact that the greater part of the salt is precipitated as humates in a peaty soil and thus loses its toxicity. The humates which are hardly ionised actually seemed to have a stimulating effect on the denitrifying bacteria.

*Magnesium sulphate and zinc sulphate.* — Neither of these salts totally inhibited denitrification. With zinc sulphate the action was diminished a little, but with magnesium sulphate it was nearly always slightly increased. Probably with both these salts too the results are due to the formation of non-ionised humates.

*Non-ionisable substances.* — In a last series of experiments, disinfectants which did not owe their germicidal properties to ions were used: *i. e.* carbolineum, toluene and carbon bisulphide. Where carbon bisulphide was used the period of incubation was increased from two to five weeks during which time the soil was maintained at ordinary room temperature instead of at 28° C. The following results were obtained: carbolineum increased denitrification; toluene had no stimulating effect in whatever proportion used but neither did it have an inhibitive effect except in one single instance; carbon bisulphide on the other hand always decreased denitrification even when used in very small doses.

It would therefore appear that on peaty land, carbon bisulphide may be recommended as the best germicide to employ.

1061 - **The Chemical Composition of Plants as a Guide to the Fertility of the Soil.** — SAVVIN P. in *Журнал Опытной Агрономіи* (Review of Agricultural Experiments) Vol. XVII, No. 1, pp. 1-12. Petrograd, 1916.

Two series of investigations were carried out to determine the relationship between the phosphoric acid content of the plant and that of the soil in which it had been grown. In the first series oats were grown in sand to which nutrient solution was added. Each vessel contained 7 kg. of sand and the nutrient solution was that of Prianichnikoff, *i. e.* phosphoric acid in the form of $Ca\ HPO^4 + 2H^2O$ and nitrogen in the form of ammonium nitrate, both being used in the proportions laid down by Hellriegel. The solution was used at normal strength, double strength and treble strength. In the second series of experiments the sand was replaced by two soils, one of which was a poor sandy forest soil from the Agricultural Institute of Moscow and the other a tchernozium (black soil) from the Kharkov Agricultural Station, unresponsive to phosphate manuring. Calcium phosphate and potassium nitrate were added in quantities equal to normal strength and to 2, 4 and 8 times normal strength.

When the oat plants were harvested, the grain was separated from the

straw and both were analysed. It was found that the phosphoric acid content of the grain varied very little while that of the straw reflected to a much greater extent the phosphoric acid content of the culture medium. The sand cultures gave the following figures:

| | Phosphoric acid content | |
|---|---|---|
| | in straw | in grain |
| Normal strength | 0.6503 per cent | 0.2844 per cent |
| Double " | 1.458 " " | 0.2982 " " |
| Treble " | 1.834 " " | 0.2865 " " |

In the grain the phosphorus was present almost wholly in the form of organic compounds while in the straw only phosphates were found. The phosphate content of the plant, therefore, varied considerably according to the available amount of phosphoric acid in the culture medium, but the organic phosphorus remained almost constant varying only within the limits of 0.41 and 0.60 per cent. The organic phosphorus was not affected by the total weight of the plant and only to a slight extent by the amount of phosphoric acid absorbed by the plant. Where the nutrient solution was used in a concentrated form, considerable amounts of phosphoric acid were taken up by the plant, but only a very small portion of this was converted into organic compounds of phosphorus, the main part being deposited as phosphate in the straw.

From these results, it should be possible to draw the practical conclusion that a high percentage of phosphate in oat straw indicates the presence of a considerable amount of phosphoric acid in the soil. But it is pointed out that other causes such as general conditions of growth may also affect the percentage of phosphates in plants, indeed the writer's own experiments of 1913 and 1914 gave results directly contradictory to those obtained in the above trials and are supported by the evidence of other authorities (HALL, SEELHORST, ATTERBERG). On the whole, therefore, it cannot be considered that the determination of the phosphate content in oat straw affords a reliable guide to the condition of the soil, but in special cases it may yield useful information.

METHODS O SOIL CULTIVATION

1062 – **The Influence of Relative Area in Intertilled and Other Classes of Crops on Crop Yield.** — BRODIE D. A. in *United States Department of Agriculture, Office of the Secretary, Circular* No. 57, pp. 1-8. Washington, March 31, 1916.

Experience has taught that there is a limit to the extent to which land may be occupied by the same class of crops without detriment to crop yield, and this experience has led to the adoption of rotations. Just what proportion of the crop should be planted to intertilled crop (*i. e.* corn, potatoes, tobacco, etc., planted in rows and cultivated between the rows), what to grain crops, and what to perennial grass, to prevent serious injury to the soil, are questions that the farmer has always had to answer for himself, largely from his own experience or from the established custom of his locality.

During the past two years studies as to the relation of the type of

farming to the maintenance of crop yield have been made on 240 farms in Chester County Pa., and on 303 farms in Central Illinois. Use has also been made of the data compiled for 377 other farms in Chester, Co. Pa. and 300 farms in Lenawee Co. Mich. The studies consisted in comparing the productive capacity of the various farms by means of their "crop index" which may be defined as the crop yields of a particular farm expressed in percentage of the average crop yields in the community.

Results of the investigations indicated:

1) That there seems to be in all districts so far studied an optimum percentage of the crop area of the farm which can be devoted to a single class of crops and maintain maximum yields. Even under the rather intensive types of farming prevailing in Chester Co. Pa. and in Lenawee Co. Mich., and under the more extensive type of farming in Central Illinois, the optimum area of intertilled crops in each case falls within 5 per cent of each other, the range being about 32 to 36.

2) That when more than this percentage of area is devoted to a single class of crops, yields decrease even where there is an increase in the number of live stock per acre.

3) That in Chester Co. Pa. the optimum percentage area for perennial grass (timothy and clover) is about 36 per cent of the crop area of the farm.

4) That data of this character make it possible to construct a cropping system which should under average conditions, produce maximum yields with a given quantity of manure. In the case of Chester Co. such a system constructed from data brought out in the 1912 survey corresponds very closely to the practice of those farmers who maintain high yields and of those who have made highest profits.

These conclusions were arrived at as follows: the relation between the crop yield, the percentage of the crop area of the farm in intertilled crops, and the average number of live stock per acre was determined for Chester Co. Pa. and for Central Illinois (Tables I and II).

The relation of non intertilled crops to crop yield was next investigated (Table III) and finally that of perennial grass (timothy and clover) to crop yield (Table IV).

The results show that the best distribution of area amongst the different classes of crops occurs when 10 per cent is allowed for crops not in the rotation such as garden, orchard, soiling crops etc., 36 per cent is under intertilled crops, 36 per cent in perennial grass and the remaining 18 per cent in annual crops not intertillied. To illustrate how nearly this corresponds to the actual practice of the most successful farmers, Table V shows the crop area percentages of the 27 Chester Co. farms having the highest yield and of the 27 having the lowest yield. There is a close agreement between the cropping systems selected for high crop yields andt hat producing the highest profits and this agreement indicates that a well balanced type of agriculture prevails in Chester Co. Where this condition does not prevail high yields are obtained to the sacrifice of profit or high profits are made at the sacrifice of soil fertility.

TABLE I. — *Relation of per cent of crop area in intertilled crops to crop index in Chester Co. Pa.* (1914 *survey*).

| No. of farm | Per cent of crop area in intertilled crops | | Average no. animal units (1) per 100 *acres* in crops | Average crop index |
|---|---|---|---|---|
| | Range | Average | | |
| 72 | Less than 25 | 20.8 | 37.6 | 96 |
| 58 | 25–30 | 27.4 | 41.2 | 100 |
| 53 | 30–35 | 32.7 | 48.4 | 105.2 |
| 57 | 35 or more | 41.4 | 53.4 | 104.7 |

(1) An animal unit is a mature horse or cow or as many smaller animals as require the feed of a horse or cow, *i. e.*, 2 head of young cattle; 5 hogs, 7 sheep, or 100 hens.

TABLE II. — *Relation of per cent of crop area in intertilled crops to crop index in Central Illinois* (1913 *survey*).

| No. of farms | Per cent of crop area in intertilled crops | | Average no. animal units per 100 *acres* in crops | Average crop index |
|---|---|---|---|---|
| | Range | Average | | |
| 75 | Less than 37.5 | 28.4 | 19.3 | 102 |
| 72 | 37.6–48.9 | 43.3 | 18.1 | 103 |
| 82 | 49.0–59.9 | 53.9 | 17.1 | 100 |
| 74 | 60 and over | 73.6 | 15.8 | 93 |

TABLE III. — *Relation between the per cent of the crop area in annual crops not intertilled and crop index in Chester Co. Pa.* (1914 *survey*).

| No. of farms | Percentage of the crop in annual crops not intertilled | | No. of animal units per 100 *acres* in crops | Average crop index |
|---|---|---|---|---|
| | Range | Average | | |
| 64 | Less than 18 | 14,2 | 51.9 | 105 |
| 73 | 18–24 | 26.0 | 44.5 | 102 |
| 48 | 24–30 | 26.9 | 39.8 | 99 |
| 53 | 30 and over | 34.9 | 36.8 | 97 |

TABLE IV. — *Relation of per cent of crop area in perennial grass to crop index in Chester Co. Pa.* (1914 *survey*).

| No. of farms | Per cent of crop area in perennial grass | | No. of animal units per 100 *acres* in crops | Average crop index |
|---|---|---|---|---|
| | Range | Average | | |
| 64 | Less than 32 | 22.9 | 46.7 | 102 |
| 48 | 32–39 | 34.7 | 44.8 | 105 |
| 57 | 40–45 | 41.7 | 44.2 | 102 |
| 69 | 45 and over | 51.7 | 40.8 | 98 |

TABLE V. — *Average percentage of area of intertilled crops, annual crops not intertilled, and perennial grass, Chester Co. Pa.,* (1914 *survey*).

| Class of crops | Average percentages | | | | |
|---|---|---|---|---|---|
| | On 240 farms | On 27 farms showing highest yields | On 27 farms showing lowest yields | Modified for: highest yields | Modified for: highest profits (1) |
| Intertilled . . . . . | 28.4 | 34.0 | 27.4 | 36 | 34–43 |
| Annuals not intertilled . . . | 22.3 | 18.8 | 23.4 | 18 | 10–19 |
| Perennial grass . . . . . | 38.0 | 38.2 | 39.4 | 36 | 40–50 (2) |
| Garden, orchard, etc. . . . . | 11.3 | 9.0 | 9.8 | 10 | — |

(1) The figures for this column are derived from a 1912 survey.
(2) All hay crops including annuals.

1063 – **"Tetraphosphate".** — VINASSA, G. (Turin Agricultural Experiment Station) in *Le Stazioni Sperimentali Agrarie Italiane*, Vol. XLIX, Nos. 7-8, pp. 357-365. Modena, 1916. MANURES AND MANURING

"Tetraphosphate" is a new fertiliser recently put on the market, and has been suggested as a substitute for basic slag. It is prepared by mixing powdered phosphorite with carbonates of the alkaline earths (at the rate of 6 per cent by weight of the carbonates) and heating the mixture to 400° C. in special ovens. The mass is then moistened and inert bodies are added till a substance containing 20 per cent of total phosphoric acid is obtained. The finished product is a dry, greyish-white powder, almost insoluble in water with which it gives an alkaline reaction, and partly soluble in acids which cause an evolution of carbon dioxide.

"Tetraphosphate" was treated with a number of solutions and the solubility of its phosphoric acid was determined; similar tests with Sfax phosphorite were carried on at the same time. The results are given below.

*Comparative solubility of "tetraphosphate" and phosphorite.*

| Solvent | Grams $P_2O_5$ per 0.71 gm. phosphorite | Grams $P_2O_5$ per 1 gm. tetraphosphate |
|---|---|---|
| Water | trace | trace |
| Water saturated with $CO_2$ | " | " |
| Saline solutions ($NaCl$ and $NaNO_3$, $NH_4Cl$ and $(NH_4)_2SO_4$) | " | " |
| Ammonium acetate 18 % | 0.0009 | " |
| Ammonium malate 40 % | 0.0009 | " |
| Ammonium tartrate 20 % | 0.00016 | 0.00015 |
| Ammonium citrate 40 % | 0.0163 | 0.0100 |
| Citric acid 0.5 % | 0.0225 | 0.0106 |
| Citric acid 2 % | 0.0529 | 0.0282 |
| Citric acid 10 % | 0.1217 | 0.1041 |
| "Citroformic" acid (4 % citric acid, 6 % formic acid, 10 % NaCl) | 14.04 per cent | 13.79 per cent |

"Citroformic" acid was proposed as a reagent by the inventor of "tetraphosphate", yet even with this solvent, phosphorite shows a higher percentage of soluble phosphoric acid than does "tetraphosphate", and with all the other solvents the same thing was observed. These results would indicate that no valuable changes take place when the phosphorite is heated with the carbonates of the alkaline earths, and that the process which is complicated and costly is also useless. The name "tetraphosphate" is very inappropriate as its insolubility clearly proves it to contain neither tetraphosphate nor calcium silicophosphate both of which products have been isolated from basic slag, by HILGENSTOCK and CARNOT. From the purely chemical point of view, there is no analogy between basic slag and "tetraphosphate" which may be simply considered a ground phosphate mixed with inert compounds.

Occasional satisfactory results obtained by farmers with this substance and said to demonstrate its particular efficiency should be looked upon as inconclusive.

1064 – **Lucerne Inoculation Experiment, Hawkesbury Agricultural College (New South Wales) 1912-16.** — HEINRICH J. O. in *Agricultural Gazette of New South Wales*, Vol. XXVII, No. 5, pp. 305-313. Sydney, May, 1916.

An experiment was conducted at the Hawkesbury College during the years 1912-16 to contrast the various methods of inoculation for lucerne on manured and unmanured land and to ascertain their practical value in establishing lucerne on soil which had not previously borne it. The ground chosen for the experiment was a plot of well drained, uniform, red sandy loam. Methods of inoculation were as follows:

1. Inoculation of seed with lucerne rhizobia.
2. " " soil " " " before sowing.
3. " " " " " " after germination
3a " " " " " " when half grown.
4. " " " " soil of similar composition from an established lucerne area.
5. " " " " " soil of dissimilar composition from an established lucerne area
6. " " seed with vetch rhizobia.

TABLE I. — *Result of examination for nodules three months after sowing.*

| Method of inoculation | Manure | No. of plants examined | Plants with nodules on roots: Number | Plants with nodules on roots: Per cent | Remarks |
|---|---|---|---|---|---|
| Check | | 44 | 0 | 0 | |
| Inoculated after germination. | No manure | 69 | 12 | 17 | Fairly large; 3-4 on a plant. |
| | Lime | 70 | 55 | 79 | Large to medium; scattered; average 5. |
| | Complete manure | 70 | 15 | 21 | Large size; scattered. |
| Check | | 75 | 0 | 0 | |
| Check | | 83 | 2 | 2 | |
| Inoculated before sowing. | No manure | 70 | 2 | 3 | |
| | Lime | 128 | 107 | 84 | Medium; scattered; average 6. |
| | Complete manure | 84 | 6 | 7 | Scattered. |
| Check | | 66 | 1 | 2 | |
| Check | | 69 | 1 | 1 | |
| Seed inoculated with lucerne rhizobia. | No manure | 69 | 0 | 0 | |
| | Lime | 52 | 7 | 15 | Small; average 5. |
| | Complete manure | 63 | 5 | 8 | |
| Check | | 77 | 0 | 0 | |
| Check | | 64 | 0 | 0 | |
| Not inoculated. | No manure | 62 | 0 | 0 | |
| | Lime | 75 | 1 | 1 | |
| | Complete manure | 66 | 0 | 0 | |
| Check | | 76 | 0 | 0 | |
| Inoculated with soil of the same composition. | Complete manure | 89 | 55 | 62 | Average 6; scattered. |
| | Lime | 85 | 82 | 96 | » 7; » |
| | No manure | 94 | 79 | 84 | » 6; » ; at top. |
| Inoculated with soil of different composition. | Complete manure | 74 | 4 | 5 | |
| | Lime | 85 | 56 | 64 | Average 3; scattered. |
| | No manure | 78 | 6 | 8 | Scattered. |
| Check | | 62 | 0 | 0 | |
| Check | | 97 | 0 | 0 | |
| Check | | 72 | 0 | 0 | |
| Seed inoculated with vetch rhizobia. | No manure | 64 | 0 | 0 | |
| | Lime | 72 | 0 | 0 | |
| | Complete manure | 73 | 0 | 0 | |

TABLE II. — *Relative yields of lucerne* 1913-14, 1914-15.

| Method of inoculation | Manure | Relative yield, check plot = 100 |
|---|---|---|
| Inoculated after germination | No manure | 86.03 |
| | Lime | 105.66 |
| | Complete manure | 102.88 |
| Inoculated before sowing | No manure | 86.01 |
| | Lime | 106.72 |
| | Complete manure | 119.51 |
| Seed inoculated with lucerne rhizobia | No manure | 74.72 |
| | Lime | 112.82 |
| | Complete manure | 117.03 |
| Not inoculated | No manure | 85.36 |
| | Lime | 115.79 |
| | Complete manure | 115.16 |
| Inoculated with soil of same composition | Complete manure | 94.52 |
| | Lime | 107.14 |
| | No manure | 102.29 |
| Inoculated with soil of different composition | Complete manure | 100.63 |
| | Lime | 117.35 |
| | No manure | 106.58 |
| Seed inoculated with vetch rhizobia | No manure | 89.64 |
| | Lime | 102.51 |
| | Complete manure | 99.34 |

The land after being carefully prepared, was divided up so that each method of inoculation except 3*a* was tried with: *a*) no manure, *b*) lime at the rate of one ton per acre and *c*) complete manure (1 cwt. superphosphate, ½ cwt. sulphate of potash, ½ cwt. sulphate of ammonia per acre). About three months after sowing, samples of roots were examined for nodule formation with the results given in Table I. Ten months after the laying down of the experiment another examination was made for nodules. The results obtained were similar to the previous ones, but it was evident that the earlier examination was the more reliable as the older the plant the deeper are the fine roots on which the nodules are found and the greater the difficulty in uprooting them. Moreover if the treatment is efficacious, nodules will be found on the young plant as early as six months after germination. Finally in February and March 1916, four years after the begin-

ning of the experiment, a further examination for nodules was carried out. By this time all the plots contained lucerne rhizobia.

From Table I it will be seen that:

1) The method of artificial inoculation with cultures of lucerne rhizobia are far from being as efficient nodule producers as the inoculation with soil of the same composition as the land being treated.

2) Inoculation with rhizobia from a legume other than lucerne is ineffective when used with the latter crop.

3) The addition of lime greatly increases the nodule forming power.

Whereas these deductions are in full accord with those of other investigators, the present experiments gave results different from those obtained in other parts of the world as regards yield. In Table II will be found the figures for the 1913-14 and 1914-15 harvestings from which it is evident that inoculation had a depressing effect on the yield when used alone or in conjunction with lime or complete manures.

1065 – **The Application of Botanical Science to Agriculture.** — HOWARD ALBERT (Imperial Economic Botanist, Pusa) in *The Agricultural Journal of India*, Special Indian Science Congress Number pp. 14-26. Calcutta and London, 1916.

AGRICULTURAL BOTANY, CHEMISTRY AND PHYSIOLOGY OF PLANTS

A study of the literature dealing with agriculture indicates that there is some confusion of ideas as to the precise relation which exists between the science of botany on the one hand and the practice of agriculture on the other. In the present paper, an attempt has been made to define the bearing of the scientific aspect of the vegetable kingdom on the economic development of crop production and to show how a knowledge of this science can best be applied to agricultural problems. For any real advance to be made in crop-production, a thorough scientific knowledge of botany in all its branches is one of the first conditions of progress. This will be clear if the real problems to be solved are considered in all their bearings.

The attempt to improve cultivated crops by scientific methods is a recent development and can be traced to two main causes — (1) the gradual recognition of the fact that in agriculture the plant is the centre of the subject; and (2) the rapid rise of the study of genetics which followed the rediscovery of Mendel's results in inheritance.

The importance of the plant in crop production may be said to be generally recognized at the present time. A large number of botanists are being employed at Experiment Stations and the public have often been led to expect that a revolution is about to take place, particularly through the application of what is popularly known as Mendelism. A critical examination of the literature discloses some signs that these extravagant hopes are not likely to be fulfilled, not that these hopes are impossible but rather because the problems have not always been taken up on a sufficiently broad basis and attacked simultaneously from several standpoints.

II. *The Development of Botany.*

The more recent developments in botanical science are fortunately all tending to a study of the plant as a living whole. Both the scientific study in the field of plant associations (ecology) and the systematic examination of the various generations of plants raised from parents which breed true

(genetics) are doing much to mitigate the evils which follow from undue devotion to purely laboratory work. Ecology and genetics are taking the botanist into the field and will, in all probability, materially influence the future development of the science. This will be all to the good and should do much both to raise the standard and emphasize the importance of field work and also develop the natural history side of botany. The botany of the future is likely to combine all that is valuable in laboratory work with modern ideas on ecology, classification, and genetics.

*The relation of Botany to Agriculture.*

A wide scientific outlook on the many aspects of plant life is the first condition in applying botanical science to practical problems. The next step for the botanist is to study his crop in the field and to learn to appreciate the agricultural aspects of crop-production. The investigator must himself be able to grow his crop to perfection and it is not too much to say that no real progress can be made without this. The ordinary agricultural processes applied to any crop bear a direct relationship to the physiological necessities of the plant and have been evolved from centuries of traditional experience. In all investigations on crops, a first-hand knowledge of practice is necessary and nowhere is it so important as in plant-breeding work where practice is quite as valuable as an acquaintance with the methods and results of genetics. The greatest devotion to the study of inheritance, using for this purpose material indifferently grown, is largely labour lost as many characters are masked unless the plants are really thriving and well developed. For instance in wheat, the red colour of the chaff never develops in badly grown plants thereby causing great confusion in systematic and breeding work on this crop. In tobacco, the various leaf characters are almost entirely masked by bad cultivation and their inheritance can only be studied if the crop is grown to perfection.

Science and practice must be combined in the investigator who must himself strike a correct balance between the two. The ideal point of view of the improver is to recognize agriculture as an art which can best be developed by that instrument called science. Once this is fully realized and acted upon, the place of the experiment station in agriculture will be understood as a matter of course and the qualifications needed by the workers will be self-evident. There will be little or no progress if practical agriculturists are associated with pure scientists in economic investigations. This has often been tried and has never yielded results of any importance. The reason why such co-operation fails is that without an appreciation of practice the scientist himself never gets to the real heart of the problem. The history of the indigo investigations in India is a very good case in point. During the last 20 years, a number of scientists have been employed in an endeavour to improve the production of natural indigo. Over £50,000 have been expended on this work between 1898 and 1913 but no results have been obtained, largely because the scientists preferred to engage European assistants on indigo estates to grow their experimental crops rather than to cultivate them themselves. The result was that the real problems were not discovered, a large amount of ineffective work was done and valuable

time was lost during which the natural indigo industry declined and the synthetic product rapidly established itself in the markets of the world. The solution of the indigo problem has recently been disclosed by a study of the plant in the field. It is not too much to say that if a properly qualified botanist with a knowledge of agriculture had attacked the indigo problem twenty years ago, the history of this industry would have been very different.

There remains for consideration the commercial aspect of investigations on crops and the necessity, on the part of the worker, of keeping in close touch with the requirements of the trade. Particularly is this important in the case of materials used in textile industries like cotton where any marked alteration in the raw product might easily involve extensive changes in machinery. In the case of cereals like wheat, it is necessary in improving the variety to follow closely the needs of the manufacturer and to ensure that any new types introduced into general cultivation can be milled to advantage. The successful merchant often possesses information which is of the greatest value to the botanist and which helps the investigator to perceive the manner in which an improvement can most effectively be made.

That a combination of science, practice, and business ability in the same individual is essential in all agricultural investigations dealing with the plant will be evident if the kind of problem awaiting solution is considered in detail. Many of these questions fall into the following three classes :

(1) *Improvements in the efficiency of the plant.* — Any attempt to increase the output of a crop can only be successful if the the physiology of the plant is considered together with the economic aspects of production. Such problems have to be solved within the working conditions of the plant factory and also within the general economic limits imposed by labour and capital. In such matters, the investigator might easily go astray unless he keeps the laws of plant physiology in view and unless he is fortified by a knowledge of practice and an appreciation of the general working conditions.

(2) *The treatment of disease.* — The inadequacy of much of the experiment station work on the diseases of plants, in which fungi and insects are concerned, has recently been referred to by Professor Bateson in one of the sectional addresses to the British Association.

In the course of his speech, this gentleman drew attention to the fact that there is at the present time hardly any comprehensive study of the morbid physiology of plants comparable with that which has been so greatly developed in application to animals. The nature of the resistance to disease, characteristic of so many varieties, and the methods by which it may be ensured, offer a most attractive field for research, but it is one in which the advance must be made by the development of pure science, and those who engage in it must be prepared for a long period of labour without ostensible practical results.

(3) *The creation of improved varieties.* — In this work an understanding of the needs of the crop and a knowledge of systematy and genetics must

be combined with the insight of the inventor, no possible scientific method can succeed without the intuition of the breeder. Any attempt to obtain or record the characters of large numbers of plants and to obtain the final selections by a scientific system of marks is hopeless, as the investigator would be a speedily swamped by the volume of his material. The insight of the breeder is necessary for the work and the judgment, which comes by practice, in the rapid summing up of essentials by eye is far more useful than the most carefully compiled records or any system of score cards. The successful plant breeder is to a large extent born and not made. Science helps the born breeder by providing him with new and better instruments and, by bringing knowledge to bear from many sides, it accelerates the output and lightens the work in a multitude of ways.

1066 – **A Biochemical Study of Nitrogen in Certain Legumes.** — WHITING, A. L. *University of Illinois, Agricultural Experiment Station, Bulletin* No. 170, pp. 471-542. Urbana, Ill., March 1915.

The writer discusses the whole question of nitrogen fixation by leguminous plants and gives an account of his own experiments on the subject. These he divides into two parts:

I. *Studies to determine through which organ legumes obtain atmospheric nitrogen.* The plants used were the soybean (*Glycine hispida* Maxim) and the cowpea (*Vigna unguiculata* Walp). Uniform seeds were carefully selected and inoculated with an infusion of *B. radicicola*. The plants were grown in silver sand to which a nutrient solution was added, both sand and solution being free from nitrogen. Wolf bottles were used as containing vessels in order that the atmosphere around the roots should be controlled, and whereas the roots of some plants were maintained in a gas current consisting of 96 to 98 per cent of oxygen and 2 to 4 per cent of carbon dioxide, others were maintained in a current of air. At the end of each experiment the nitrogen was estimated in each plant, and the amount fixed was determined. Results are given in Tables I and II.

The error in soybeans nos. 1 and 2 was partially accounted for by a slight injury to these plants by grasshoppers and red ants. There was also a small experimental error. The fixation shown by cowpea no. 2 was also attributed to a leak around the stem which prevented the Wolf bottle from being gas tight. All plants receiving air had well developed nodules.

The experiments were repeated and the results were confirmed. In order to test the viability of *B. radicicola* after exposure to the abnormal atmosphere, infusions were made from the roots of plants grown in the oxygen current and applied to cowpea seeds that had been sterilized and planted in sterile sand. Sterile conditions were maintained throughout the test. Profuse nodule formation resulted, showing that the viability of *B. radicicola* had been in no way impaired.

Plants grown in the oxygen current usually developed two and sometimes three leaves before they seemed to be checked in their growth. Soon an interesting translocation set in. Each plant removed the nitrogen from the lower leaves and developed a new leaf of a normal green colour.

TABLE I. — *Fixation of nitrogen by soybeans.*

| No. of plant | Treatment | Nitrogen in plant after 28 days | Nitrogen in seeds | Nitrogen fixed |
|---|---|---|---|---|
| | | mgms. | mgms. | mgms. |
| 1 | $CO^2 + O$ | 10.43 | 11.4 | — 0.97 |
| 2 | $CO^2 + O$ | 10.65 | 11.4 | — 0.75 |
| 3 | Air | 17.61 | 11.4 | + 7.07 |

TABLE II. — *Fixation of nitrogen by cowpeas.*

| No. of plant | Treatment | Nitrogen in plant after 37 days | Nitrogen in seedlings at start | Nitrogen fixed |
|---|---|---|---|---|
| | | mgms. | mgms. | mgms. |
| 1 | $CO^2 + O$ | 9.21 | 7.90 | 1.31 |
| 2 | $CO^2 + O$ | 13.03 | 7.90 | 5.13 |
| 3 | $CO^2 + O$ | 9.43 | 7.90 | 1.53 |
| 4 | Air | 24.84 | 7.90 | 16.94 |
| 5 | Air | 23.61 | 7.90 | 15.71 |

TABLE III. — *Total nitrogen in various parts of soybeans and fixation at different periods (gms. per jar of 5 plants).*

| Harvest | Age of plant | Nitrogen in tops | Nitrogen in roots | Nitrogen in nodules | Nitrogen in whole plant | Nitrogen in seeds | Nitrogen fixed |
|---|---|---|---|---|---|---|---|
| | days | | | | | | |
| 1 | 38 | 87.10 | 13.35 | 28.04 | 128.49 | 57.30 | 71.19 |
| 2 | 53 | 204.59 | 22.70 | 47.10 | 274.39 | 57.30 | 217.09 |
| 3 | 60 | 286.91 | 43.44 | 82.95 | 413.30 | 57.30 | 356.00 |
| 4 | 67 | 356.52 | 40.15 | 60.40 | 457.07 | 57.30 | 399.77 |
| 5 | 74 | 247.82 | 30.82 | 54.56 | 333.20 | 57.30 | 275.90 |

The green of the old leaves disappeared from the margins first, then the whole leaves became yellow and dropped from the plant. The process repeated itself until there was not nitrogen enough left to give colour to another leaf, when a pale green or even a yellow leaf was formed. The whole appearance of the plants was very characteristic.

II. *Relative percentages of nitrogenous compounds in the various parts of the soybean and cowpea at definite periods of growth.* — Determinations of total, soluble and insoluble nitrogen were made on the dry matter of plants grown under specially controlled conditions. Total

TABLE IV. — *Analysis of nitrogen in soybeans (mgms per jar of 5 plants).*

| Harvest | Part of plant | Insoluble nitrogen | Total soluble nitrogen | Nitrogen distilled with Na OH | Nitrogen ppted by phospho tungstic acid | Other soluble nitrogen | Total nitrogen |
|---|---|---|---|---|---|---|---|
| 1 . . . . | top | 61.52 | 24.39 | — | 4.16 | 20.23 | 85.91 |
| | root | 8.90 | 5.00 | — | 0.85 | 4.15 | 13.90 |
| | nodules | 15.72 | 11.61 | — | 3.54 | 8.07 | 27.33 |
| 2 . . . . | top | 135.15 | 37.99 | — | 8.11 | 29.88 | 173.14 |
| | root | 15.49 | 5.67 | — | 0.48 | 5.19 | 21.16 |
| | nodules | 32.83 | 16.03 | — | 9.66 | 6.37 | 48.86 |
| 3 . . . . | top | 146.79 | 140.12 | — | 25.63 | 114.49 | 286.91 |
| | root | 27.03 | 16.42 | — | 0.93 | 15.49 | 43.95 |
| | nodules | 47.95 | 35.00 | — | 18.55 | 16.45 | 82.95 |
| 4 . . . . | top | 183.35 | 134.26 | 17.86 | 25.96 | 90.44 | 317.61 |
| | root | 26.14 | 12.93 | 2.49 | 0.85 | 9.59 | 39.07 |
| | nodules | 31.77 | 27.27 | 2.38 | 15.35 | 9.54 | 59.04 |
| 5 . . . . | top | 151.68 | 95.32 | 12.02 | 29.31 | 53.99 | 247.00 |
| | root | 21.55 | 14.38 | 1.34 | 1.38 | 11.66 | 35.93 |
| | nodules | 29.23 | 27.21 | 2.00 | 12.13 | 13.08 | 56.44 |

nitrogen was estimated by the Joldbauer method; insoluble nitrogen represented that part left undissolved after prolonged shaking with water; soluble nitrogen was divided into the nitrogen precipitated by phosphotungstic acid, the nitrogen in the filtrate from this precipitate and a further fraction obtained by distilling the water soluble nitrogen with sodium hydroxide. Results are given in Tables III and IV.

The experiments were repeated with soybean and with cowpeas and the following conclusions were drawn:

(1) The total nitrogen determinations show that about 74 per cent of the nitrogen of the cowpeas and soybeans at the time of harvest is in the tops, while the remainder is distributed between the roots and the nodules. In the earlier periods the roots contain the larger part while later they contain much the smaller part.

(2) The percentage of soluble nitrogen in soybeans and cowpeas varies with the different parts of the plant and with the period of growth. In these experiments the soluble nitrogen, as an average, constituted in the tops about 45 per cent of the total nitrogen; in the roots 34 per cent; in the nodules of the soybeans 1 per cent. and in the nodules of the cowpeas 34 per cent.

(3) Phosphotungstic acid usually precipitates some form of nitro-

gen. In some cases the amounts precipitated vary widely, while in others the agreement is close. In these series the nitrogen precipitated by phosphotungstic acid averaged in the tops of both soybeans and cowpeas about 12 per cent of the total nitrogen; in the roots 5.5 per cent; in the nodules of the soybeans 1 per cent and in the nodules of the cowpeas 17 per cent.

(4) Other forms of soluble nitrogen than those precipitated by phosphotungstic acid and sodium hydroxide occur. In these series they constitute an average in the tops of both soybeans and cowpeas about 68 per cent of the soluble nitrogen; in the roots 77 per cent; in the nodules of the soybeans 89 per cent, and in the nodules of the cowpeas 53 per cent.

(5) Fixation takes place at a very early period in the growth of the seedling—sometimes within 14 days. It is rapid in some cases, especially with cowpeas.

(6) Plants grown under the conditions of these experiments contain no ammonia, nitrites or nitrates, as measured by the most accurate chemical methods.

1067—**The Effect of Heavy Dressings of Mineral Salts on the Development and Structure of Plants.**—WARNEBOLD, H. in *Landwirtschaftliche Jahrbücher*, Vol. 49, No. 2, pp. 215-234. Berlin, March 25, 1916.

In order to investigate the harmful effects of mineral salts when applied in excessive quantities, plants were grown in pot cultures and as soon as they were past the seedling stage, Wagner P. K. N. salt (containing 8.3 per cent of nitrogen, 26.8 per cent of potash and 17.5 per cent of phosphoric acid) was added to the pots in successive dressings which were continued even after injury to the plants had been observed. The plants were then left in the pots another few weeks before being removed for examination—anatomical and morphological. The actual amount of salts applied was not determined accurately as the object was merely to injure the plants by over manuring. An ordinary garden soil was used in all cases but one *i. e. Helianthus annuus* which was cultivated in silver sand mixed with nutrient salts. Controls fed so that normal development could take place were grown in all instances. The plants selected for the trials were: *Cucurbita Pepo, Helianthus annuus, Raphanus caudatus, Atriplex hortensis, Fagopyrum esculentum, Phaseolus vulgaris nanus, Borago officinalis, Datura Stramonium, Tropaeolum majus, Rumex alpinus.*

The results showed that the critical or harmful dose of Wagner salt varied with the species of plant. Their order of sensitiveness was as follows: *Atriplex, Cucurbita, Datura, Helianthus, Tropaeolum, Rumex, Raphanus, Borago, Fagopyrum.* Also the amount of injury done varied with individuals and with the degree of humidity in the air, though no generalisations can yet be made with regard to the latter observation.

Leaving aside leaf modifications it may be said in a general way that large doses produced similar results in all the species employed. Normal development was always checked, and the plants were all more or less dwarfed. It should be pointed out, however, that with *Cucurbita, Phaseolus* and *Datura* growth was at first stimulated, especially leaf growth,

but that this ceased after the first few applications of salts. Stem development both as regards length and thickness was retarded, but the lower internodes were not shortened to the same extent as the upper ones, probably owing to the fact that the plant was less unhealthy in the early than in the later stages of its life. *Raphanus* stems were less straight, the angles were more marked at the point of attachment of each leaf. As a rule flowering and side branches behaved exactly like the main stem, but in *Phaseolus* the branches were larger in proportion. In all cases both stem and branches were greener than in control plants. The time of flowering varied with different plants, the flowers being always dwarfed.

While the development of the lower leaves was usually normal, the growth of the upper ones was poor. Leaf blades and petioles were affected. leaf blades being frequently bent and twisted. The leaves were also darker green in the initial stages, but this difference gradually faded away. Stomates were smaller than in normal plants. The root system was stunted by large doses of mineral salts.

Anatomical examination revealed the following differences between normal and injured plants: In the stem, the cortex cells were smaller; the chlorophyll content was higher; the formation of starch, tannin and oxalate was less active. In the leaves the same differences were observed; the leaf-blades were also thicker and while the smaller size of all cells was noticeable it was especially marked in the epidermis and in the palissade tissue. *Raphanus* besides containing more chlorophyll also had larger chromophores.

In a small number of trials, the pots were lixiviated after a certain time to remove the excess of salt and the plants were allowed to develop under normal conditions. Recovery occured in direct proportion to the amount of injury which the plant had suffered.

1068 – **Nitrogen Requirements of the Olive Tree.** — PETRI, L. in *Atti della Reale Accademia Economica Agraria dei Georgofili di Firenze*, Vol. XCLV, pp. 138-147. Florence, July, 1916.

The writer has shown in previous investigations on *Olea europea* (1. that all members of that species, wild or cultivated, growing on poor or rich soil, invariably bear a certain number of flowers in which the ovary is not completely differentiated and that imperfect flowers such as these fail to fruit. In normal plants the cause of the abortion lies with the supply of nitrogenous substances in the flowering branches which is not sufficient to meet the requirements of all the flowers produced. Lack of soil moisture is also an indirect cause, for by injuring both roots and leaves, it interferes with the transpiration current and thus prevents the transport of sufficient nitrates to the flowering branches for the proper development of all ovaries. The difference between the nitrogen content of a perfectly fertile branch and that of one bearing nothing but flowers with abortive ovaries has proved to be considerable; while the former was shown to contain from

(1) PETRI L. Studi sulle malattie dell'olivo. V. Ricerche sulla biologia e patologia dell'olivo. *Memoria della R. Stazione di Patologia vegetale*, V, pp. 5-64. Roma, 1914. See also *B.* 1915, No. 108.

2.119 to 2.370 per cent of nitrogen in the dry matter, the latter only contained from 0.724 to 0.924 per cent. The phenomena can also be interpreted as a stimulation to over-production of flowers correlated with a scarcity of nitrogen in the flowering branches.

The present investigations were directed to a further study of the contributing causes and more particularly to the part played by the "mycotropic" rootlets as nitrogen storers. These "mycotropic" rootlets or rootlets or endotropic mycorhiza are caused by the presence of a symbiotic fungus in the cortical parenchyma of the root; they can like normal rootlets absorb nitrates from the soil solution by means of hairs; but where as the nitrates absorbed by normal rootlets are passed directly through the cortical parenchyma to the distributing vessels of the central cylinder, the nitrates absorbed by mycorhiza are immediately changed to complex organic compounds for the benefit of the endophitic mycelium which feeds on these substances and on the starch found in the adjoining cells.

A large number of experiments were carried out from which the following results may be summarised:

(1) In a soil containing little organic matter, whenever nitrates were formed in small quantities, *i. e.* lower than the usual percentage in non-manured soils, mycorhiza were found in large numbers, their development varying inversely with the amount of available nitrogen in the soil. Also there was always a proportional reduction in the growth of normal rootlets. No nitrate reaction (1) was obtained from the mycotrophic roots in these cases.

(2) When nitrates were present in quantities up to but not exceeding those usually present in a good non-manured soil, about one third of the rootlets were transformed into mycorhiza. No nitrate reaction was obtained from the mycorhiza.

(3) When nitrates were present in large quantities, very few mycorhiza were formed and those few gave a positive nitrate reaction. In these cases the rapidity of growth of the normal rootlets prevented the fungus infection to a large extent, and even where the fungus managed to penetrate into the root and to develop, the mycorhiza was not able to seize and fix all of the nitrate absorbed by the root.

These facts demonstrate the effect of endotrophic mycorhiza on the olive trees with regard to the *interception of nitrates* and identical results have been obtained when the nitrogen was absorbed in the form of ammonia. Moreover once the nitrogen has been converted into organic compounds only a minute portion of it ever goes back into circulation in the host plant, even when the intercellular hyphae which are rich in albuminoids are subjected to autolysis or digestion.

The interception of nitrogen must accentuate the ill effects of a poor soil on olive trees more especially as in such soils the development of mycorhiza is particularly active. Practical trials have shown that on well manured soils only 30 to 40 per cent of the rootlets are transformed into

(1) Nitrates were tested by the Molisch method (*Ed.*).

mycorhiza while on a hungry arid soil the number may rise to 98 per cent. And the condition of the roots is always reflected in the number of flowers with abortive ovaries. Further, where the nitrogen supply is so limited, the whole vegetative growth of the olive tree suffers. Sandy soils poor in lime and organic matter and liable to long periods of drought are particularly favourable to the development of mycorhiza, whereas rich calcareous soils stimulate the growth of normal roots.

Experiments were also carried out to determine whether the endoradical mycelium intercepted phosphoric acid. No interference in absorption and transport was observed.

Olive trees whose flowers are almost all sterile do not regain their fertility even when generously manured and this fact would indicate that the flowering branches, after being submitted to a prolonged course of malnutrition, undergo profound physiological modifications which are irreversible. Further investigations are required to establish whether the change is really complete, or whether the trees would eventually recover with time and treatment. The nitrogenous manures which are specially useful to stimulate the formation of a normal root system are those directly available to the plant and owners of olive groves should be encouraged to dress their groves periodically with such fertilizers.

PLANT BREEDING

1069 – **Correlated Characters in Maize Breeding.** – COLLINS, G. N. in *Journal of Agricultural Research*, Vol. VI., No. 12, pp. 435-453 + tables XLV - LXIII. Washington, D. C., June 19th, 1916.

Two principal methods of breeding can be distinguished, depending on the manner in which selection is carried out :

(1) Selection may aim at the isolation and propagation of desirable types of individuals.

(2) Selection may be directed towards the variation of individual characters, regarding which improvement is required.

With the majority of crop plants the method of selection of types has been by far the most productive, but this method has been very little used in the improvement of maize. Selection has been by characters instead of types.

It has not been clear why the isolation of types of plants has not been a factor in the improvement of maize. Although the differences in the characters are very clear and striking, few breeders have been able to distinguish well defined types of plants within the commercial varieties. If recognizable types exist, it must mean that groups of characters tend to appear together : in other words, the characters are correlated. The extent to which obvious characters are correlated is therefore proposed as a measure of this tendency towards the persistence of types. The experimental results here reported show that in the progeny of a hybrid between two very different varieties of maize, the characters studied, instead of forming coherent groups, are almost entirely independent in inheritance.

In attempting to measure the extent to which types persist by means of correlation coefficients, it is necessary to distinguish different kinds of correlations. For this purpose correlations are here classified as physical,

physiological and genetic. A method is also proposed by which physiological and genetic correlations may be distinguished. *Physical correlations*, are those in which the relation of cause to effect is evident, that is to say, in which one character is a function of another (for example when an increase of weight is correlated with increased height). *Physiological correlations* are those in which two characters are both the result of the same physiological tendency, as when long internodes in the primary stem are correlated with long internodes in the branches. *Genetic correlations* comprise the large residue of correlations, the nature and causes of which are subject to controversy, but which are associated with the method or mechanism of heredity. In order to determine with certainty that a given correlation is physiological and not genetic, it would be necessary to demonstrate the existence of the correlation in a number of subjects in which all the individuals possessed the same hereditary tendencies with respect to the characters studied. Theoretically this is only possible in asexually propagated groups. Approximately pure lines can be obtained where selfpollination is possible, so that if correlations are found, they may with assurance be considered physiological. With maize, however, even approximately pure lines present such abnormal conditions that some other method of study must be sought. For this plant it would seem that the solution of the question might be approached by comparing the degree of correlation in types or varieties having a relatively restricted ancestry with that in several generations of hybrids crossed among themselves and derived from two contrasted types. An equally satisfactory method is to compare the degree of correlation in the hybrid of the first generation with that of the generations obtained by crossing the hybrids among themselves. If the first generation is all descended from a single cross, its gametic differences should be no greater than those of the progeny obtained by self-pollination.

The hybrid that afforded the data for the present paper was a cross between "Waxy Chinese" and "Esperanza", two varieties of maize separated by a number of definitely contrasted characters. These extreme types must have been completely isolated from very remote times. The hybrid was made at Lanham, Md. in 1908. The plant of Waxy Chinese used as female parent of the hybrid was grown from the original seed imported from China. The Esperanza variety belongs to a peculiar type of maize (*Zea Hirta* of Bonafous) that appears to be confined to the table lands of Mexico. The characters of the two varieties presenting the sharpest contrast are as follows.

| "*Esperanza*" | "*Waxy Chinese*" |
|---|---|
| Horny endosperm | Waxy endosperm. |
| Branching space short | Branching space long. |
| Tassel erect | Tassel curved. |
| Spikelets of the male inflorescence in whorls of 2 to 5. | Spikelets of the male inflorescence inserted in pairs. |
| Glumes long. | Glumes short. |
| Leaf sheaths with tuberculate hairs. | Leaf sheaths without tuberculate hairs. |
| Upper leaf blades horizontal. | Upper leaf blades erect. |
| Upper leaf blades distichous. | Upper leaf blades monostichous. |

The large number of well defined characters which differentiate the two varieties rendered this material exceptionally favourable for the study of coherence, by which is meant the tendency for characters associated in one parent of a hybrid to remain together in the later generation of the hybrid.

For the study of correlations 11 characters were selected in which the parent varieties showed little or no overlapping. The correlation coefficients of all the combinations were calculated, and it was found that, out of 55 possible combinations, 20 exhibited significant correlations. There was not a single case in which the correlation between two characters was closer than 0.5, a fact which in itself offers an explanation of the difficulty of recognizing types in maize.

This lack of coherence of characters in maize, coupled with the fact that in order to maintain a satisfactory degree of vigour diversified ancestry must be maintained seems to render the method of isolating types inapplicable to this plant. As an offset to the limitation thus imposed, advantage may be taken of the facility with which desirable characters derived from different parents can be combined.

Appended is a bibliography of 11 works.

1070 – **Number of Chromosomes and Size of the Nucleus in Some Forms of *Antirrhinum*.** — BRESLAVETZ. L., in *Труды Бюро по прикладной Ботаникѣ* (*Bulletin of Applied Botany*), 9th year, No. 6 (91), pp. 281-287 (English text pp. 288-293). Petrograd, June, 1916.

As cytologists rarely have at their disposal pure material of non-hybrid origin, and as much importance is attributed to the nucleus and chromosomes in the transmission of hereditary characters, the number of chromosomes in pure lines of certain plants and in their hybrids have been determined.

The researches were carried out with pure lines of *Antirrhinum majus*, *A. latifolium* and *A. tortuosum*, and also with hybrids of the first and second, and the first and third. The cells used were taken from the flower buds, 280, 84, 56, 19, 25 being examined from each variety in the order cited. Thanks to the abundance of material it was possible to obtain a large number of nuclei in which the nuclear plate was clearly visible. The nucleus and chromsomes are very small, but during the phase of the nuclear plate the chromosomes are far enough apart to be counted easily.

Also, the size of the nucleus has been determined during the phase of "synapsis" when the nuclear content gathers itself together at one side. The researches of other workers have shown that the difference in the size of the nuclei of different plants is most evident in the sexual cells during this phase of synapsis, and also that the size of the nucleus may serve as a means of morphological distinction between types that are closely related systematically.

From the data obtained it is concluded that :

(1) The number of chromosomes in the somatic cells of *A. majus*, *A. latifolium* and *A. tortuosum* is the same, i. e. 18.

(2) The number of chromosomes in the hybrid *A. latifolium* × *A. majus* is also 18.

(3) The shape of the chromosomes is the same in all the plants studied.

The results of the investigations on the size of the nucleus are as follows :

| | Number of nuclei measured | Average diameter | |
|---|---|---|---|
| *A. latifolium* | 120 | 7.01 μ | = 100 |
| *A. majus* | 75 | 6.84 μ | = 97 |
| *A. tortuosum* | 45 | 6.01 μ | = 85 |
| *A. majus* × *A. tortuosum* | 96 | 6.04 μ | = 86 |

These results show that :

*a*) The size of the nucleus in the pollen mother-cells at the phase of synapsis is almost the same in *A. latifolium* and *A. majus*, while the nucleus of *A. tortuosum* is considerably smaller.

*b*) The difference between the size of the nuclei in *A. tortuosum* and in *A. majus* and *A. latifolium* finds a parallel in the external morphological character of these types.

*c*) The nuclei of the hybrid *A. majus* × *A. tortuosum* are the same size as those of *A. tortuosum*.

The differences in the size of the nuclei in these varieties of Antirrhinum lead one to suspect other morphological differences may exist between the nuclei, though they escape detection for the time. It might repay investigation to examine various other plants in which the shape and number of the chromosomes are the same, but in which the dimensions of the nuclei differ.

The article is followed by a résumé (pp. 294-309) of present-day theories of the nucleus as transmitter of hereditary characters. A bibliography of 95 publications is appended.

1071 – **A Case of Variations Observed in the Potato in Holland.** — VAN LUIJK in *Cultura* 28th year, No 332, pp. 124-127. Wageningen, 1916.

A mother plant of the variety Leeuwsche blauwen known by the number 07 was isolated in 1911 for the purpose of investigations on " mosaic disease ". Among its direct descendants a perfectly healthy individual suddenly appeared in 1912, which was distinguished from the rest of the plants by the greater rigidity of its stem, its heavier weight (2.9 lbs. heavier), by the colour of its tubers, (deep violet instead of violet), and by the elongated oval shape of its tubers. This is an interesting case of variation.

The tubers from the varying individual were planted in pots, and in 1913, 95 plants were obtained which naturally grouped themselves into four divisions :

1) 76 plants susceptible to mosaic disease. Some of these resem

bled the mother plant 07 in appearance and size and others exhibited more or less variation in shape and colour.

2) 17 healthy plants with violet tubers.

3) 1 plant possessing normal tubers, with the exception of three of a whitish yellow colour. The latter were planted, and in 1914 produced pure descendants with whitish-yellow, healthy tubers.

4) 1 almost healthy plant, showing evident marks of variation: violet petioles; glabrous and shining leaf blades, very elongated; growth rapid and exuberant; tubers of various shapes — normal violet and rounded, deep violet and rather oval, red and very elongated. These were all planted separately in pots, and in 1914 the crop showed that

*a*) the red colour is tramsitted by the red tubers to their descendants, which are more or less liable to "mosaic disease".

*b*) the violet tubers produce plants bearing violet tubers, but these plants are clearly divisible into two groups — healthy and susceptible.

From these data the following genealogical tree may be built up:

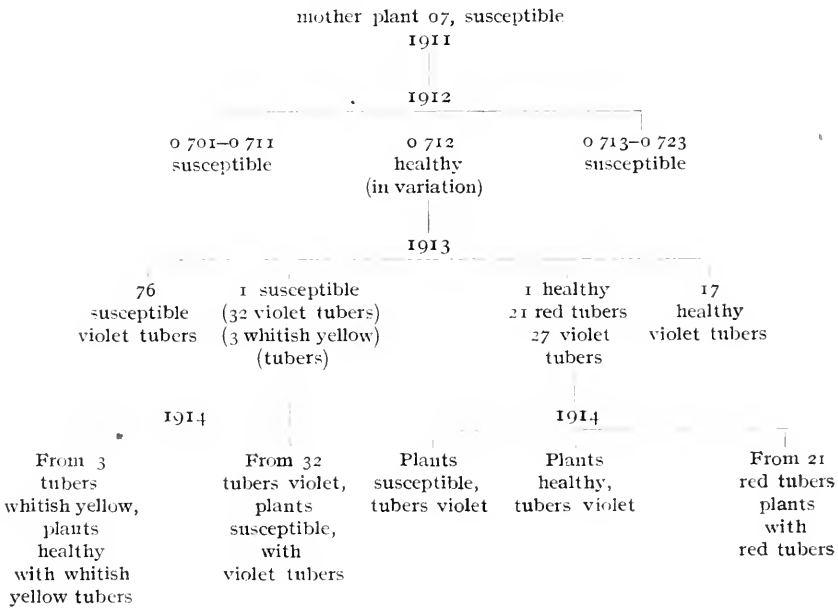


This biological study is being continued with a view to establishing the character and number of the "determinant" elements in the appearance of new characters.

This case of variation is of some scientific importance and is also of much practical value, as it demonstrates the possibility of isolating and fixing a variety of potato which is healthy and not susceptible to mosaic disease.

1072 – **Experiments on Crossing Two Varieties of Sunflower (*Helianthus annuus* × *H. agrophyllus* A. Gray) to obtain a type resistant to rust, in Russia.** — SAZYPEROV, F. A., in *Труды Бюро по прикладной Ботанике.* (Bulletin of Applied Botany). Year IX, No. 5. (90) pp. 207-227; (English text pp. 228-241), 4 plates. Pétrograd, May 1916.

In the breeding of sunflowers for oil great importance is attached to their resistance to several hostile agents, of which the chief are *Homeosoma nebulella* Hb., *Orobanche cumana* Wall., and *Puccinia Helianthi* Schr. There are types of Sunflower which are resistant to the first or second enemy (for example the group of "cuirassed" (1) Sunflowers, and among them the Karzinskij, which is not attacked by *Homeosoma nebulella* Hb., and the Zelenka which, besides, resists *Orobanche cumana* Wall). but we do not yet possess an oil Sunflower capable of resisting the rust, the most redoubtable enemy of all. *Puccinia Helianthi* attacks all types, that of *H. annuus* L. as well as that of *H. debilis* Nutt; *H. agrophyllus* A. Gray, an ornamental plant, is a solitary exception.

The experiments were carried out at the section of Voronezh of the Bureau of Applied Botany of the Ministry of Agriculture. The preliminary investigations carried out by the author on several varieties of sunflower had established the fact that *H. Agrophyllus* A. Gray, was endowed with a certain resistance to rust; in 1912, one plant of this was not attacked by rust, and in 1913. a very wet year, a good number of plants escaped the disease. For this reason, a cross was made between (1) a variety of cuirassed Sunflower (var. Ugolnij) resistant to *Homeosoma nebulella* and to *Orobanche cumana* Wall and selected from one of the plots of sunflowers not infested by Orobanche, and (2) a *H. agrophyllus* received from Germany. The choice fell upon the latter because, unlike other seeds obtained from Italy and Moscow, it was not attacked by rust.

The mother plant was *H. annuus* and the male plant *H. agrophyllus*; their characteristics are as follows:

| *Helianthus Annuus* L. var. *Ugolinij.* | *Helianthus Agrophyllus* A. Gray. |
|---|---|
| 1) Stem not branched | Stem much branched from the base. |
| 2) Average height of stem 165 cm (= 66 ins.). | Average height of stem, 175 cm (= 70 ins.). |
| 3) Stem covered with thick and rigid hairs. | Stem covered with soft whitish hairs. |
| 4) Upper part of the stem clothed with longer and softer hairs. | Upper part of the stem clothed with a thick down of a silvery white colour. |
| 5) Middle leaves heart-shaped. | Middle and especially upper leaves elongated, or lanceolate. |
| 6) Leaves green and wrinkled | Leaves whitish, felty on both sides, and soft |
| 7) A single large inflorescence. | Several small inflorescences the largest measures 7-8 cms (= 2.8 - 3.2 ins.) |
| 8) Receptacle flat, slightly convex. | Receptacle very convex. |
| 9) Ray florets yellow (var. *flavus*). | Ray florets dark yellow (var. *vitellinus*). |
| 10) Disc florets dark yellow (var. *vitellinus*) | Disc florets brown (var. *brunneus*). |

(1) The "cuirassed" sunflowers distinguished by a special structure of their fruit (achene) in the pericarp of which, between the corky layer and that of sclerenchyma there occurs a specially thickened layer.

| | |
|---|---|
| 11) Achenes large. | Achenes small. |
| 12) Achenes of type Zelenka (2) | Achenes of type Gajdukovskij (2). |
| 13) Achenes not spotted. | Achenes spotted. |
| 14) Flowering rather late. | Flowering very late. |
| 15) Badly attacked by rust. | Not attacked by rust. |

The individuals of the first generation were not uniform and showed several degrees of intermediate types which was to be anticipated, seeing that the mother plant was heterozygous. Nevertheless, it was the character of the male plant which predominated, especially in the structure of the leaves, and in the branching. As for the resistance to rust, it turned out that all the plants with green leaves, that is to say those which resembled the mother plant, were very strongly attacked by the parasite. The rust also attacked a small part of the plants with grey-green leaves, i. e. those intermediate in structure between the female and male parents. All the other plants, with silvery-grey leaves resembling those of the male parent, were not subject to rust. The fact that 2-3 of the individuals were resistant to rust showed that the investigator was on a good track, and although among these individuals there was not one that was interesting from the agricultural point of view the researches were followed up in 1915.

For the second generation the observations were made in 307 individuals reproduced from the seeds of plants which had not been attacked by rust. In this generation a considerable number of types were obtained in which were combined, in various proportions, the characters of one or the other ancestor. Though it was not possible to find any individual presenting a pure reproduction of the characters of its forebears, yet types were often observed that were very close to one of the ancestors and only differed from it in one or two characters. At the same time a considerable number of individuals were observed which occupied an intermediate position between the two original parents, as had already been noticed among the individuals of the first generation. Neglecting other characters of the hybrids of the second generation, their behaviour with regard to rust may be indicated. It must be remembered that the year 1915 was most exceptional for the spread of this disease. The heavy summer rains encouraged the development of the parasite so that by mid-August nearly all the leaves of the Sunflower were withered in a very large number of plants. But observations made in this year, so favourable to rust, showed that ¼ of the hybrids resisted the disease. The distribution, with reference to their structure, of the leaves which were attacked by rust and those which were resistant to it, was as follows:

(2) The achenes of the sunflower Zelenka are characterised by the presence of a cuirassed layer and by their striped coats, while in those of the sunflower Gajdukovskij there is also a special pigment soluble in water which is localised in the corky layer. See Bulletin of Applied Botany, No. 4-5 (79) pp. 574-576. Petrograd, 1915.

| | Leaves attacked by rust | Leaves not attacked by rust |
|---|---|---|
| *a*) Green leaves | 215 | 6 |
| *b*) Grey-green leaves | 8 | 64 |
| *c*) Silvery-grey leaves | 3 | 7 |
| | 226 | 77 |

It is seen from this table that the plants affected by the disease had rough green leaves, while those which were resistant had grey-green leaves of the intermediate type or silvery-grey leaves of the male type. If it be considered that only the seeds of those hybrids were used which were not attacked by rust the preceding year and which, in most cases, had grey-green leaves, and also that one is depending on the characteristics of the second generation, it must be recognised :

(1) that the resistance to rust is a recessive character.

(2) that it fully obeys the Mendelian law.

(3) that between this characteristic and the structure of the leaves there does not exist an absolute correlation, since the immune plants are found in all the classes (*a*, *b*, and *c*).

In the second generation there are types which may also have an interest from the agricultural standpoint, and which will serve for the future experiments that it is proposed to make with a view to obtaining a form of sunflower resistant to rust and useful for agriculture. Meanwhile, these initial experiments have given a result of practical importance, namely that by crossing appropriate parents a variety of Sunflower can be obtained which is resistant, at one and the same time, not only to *Homeosoma nebulella* Hb., and to *Orobanche cumana* Wall., but also to *Puccinia Helianthi* Schr.

073 – **Results of 20 Years Experiments on Maize at the Agricultural Experiment Station, Ohio.** — WILLIAM, C. G. and WELTON, F. A. in *Bulletin of the Ohio Agricultural Experiment Station*, No. 282, pp. 71-109, 9 fig. Wooster, Ohio, 1915.

CEREALS AND PULSE CROPS

1) Comparing a five year rotation system with the continuous growing of maize, the former has given an increase of 13 to 14.79 bushels per acre in spite of the heavier use of manure and fertilisers under continuous culture. The five year rotation consisted of maize, oats, wheat, clover and timothy, clover being the fourth year, and timothy, the fifth, both being sown together in the wheat. Comparing a five year with a three year rotation (maize, wheat, clover) the latter has given an increase of 6 to 8.39 bushels per acre. Comparing a three year rotation with continuous cropping, no fertilisers used in either case, the yield of corn from the former is 127 per cent greater, than in the latter, as shown in Table I. The results for the five year and three year rotations are given for an average of 20 and 17 years respectively.

2) The use of phosphorus alone, in the form of acid phosphate, has increased the yield of corn 8.28 bushels per acre. The use of manure alone has increased the yield 31.27 bushels per acre as an eight year average.

The use of acid phosphate and manure has increased the yield 40.58 bushels, thus leaving 9.31 bushels to be credited to the acid phosphate.

3) On such acid soils as are found on the Station farm at Wooster, one ton of burned lime, or two tons of ground limestone, applied once in 5 years, has increased the yield of corn on an average 7.35 bushels per acre on the fertilised plots and 8.25 bushels per acre on the unfertilised plots. Taking into consideration all the crops of the rotation, the application of lime has been worth, on the average, £ 2 18 *s* 0 *d* (0 $ 14.21) per acre per rotation, the cost of the lime being £ 1 1*s* 0*d*. ($ 5).

4) Comparing very deep ploughing (15 ins) with ordinary ploughing (7 ½ ins) and with subsoiling (carried out by running an ordinary subsoil plough in the bottom of the ordinary furrow for an extra depth of 7 ½ inches), the 5 year average gain for subsoiling has been 2.32 bushels per acre and for the deep ploughing, 0.43 bushel per acre, compared with the quantities obtained with ordinary ploughing.

5) Plantings of maize made at Wooster from May 4 to 10 have a given larger yields of shelled corn per acre than the plantings of other dates, though the moisture content and the shrinkage have been lower for the plantings made from April 24 to 29. Of the plantings of the latter dates, 78.62 lbs of ears as weighed in November have been required to equal a bushel of shelled corn in April, while of the planting of June 2 to 6, 91.95 lbs. of ears have been required. The variety of corn and all the conditions of growth except date of planting have been the same.

6) Where the distance between rows (42 ins.) and the number of plants per acre (12 446) have been the same, one plant every twelve inches has outyielded 3 plants every 36 inches (in hills) by 4.55 bushels per acre. The produce obtained from isolated plants and from those grouped in hills of 2,3 and 4 respectively was: — grain, 46.88 ; 46.28 ; 42.33 ; 42.85 bushels per acre ; stems (stover), 2 827 ; 2 417 ; 2 168 ; 2 180 lbs. per acre.

7) With hills 42 inches apart each way, the maximum yield of shelled corn, as a 10 year average, has been secured from 4 plants per hill or 14.220 plants per acre.

8) Nine years tests of deep (4 ins.) as compared with shallow (1 ½ in). cultivation show an average gain of 4 bushels per acre in favour of shallow cultivation. The average crops have been respectively : — grain — 56.4 ; 60.4 bushels per acre ; stems — 2 691, 2 874 lbs. per acre.

9) Two years' tests of three late cultivations of corn (in July and August) with a one-horse cultivator, after the ordinary cultivation had been carried out with a two-horse implement (five cultivations in June and early July) show an average gain of 3.44 bushels per acre for late cultivation.

10) A 10 year average variation of 6.25 bushels per acre has been found in varieties of corn well acclimatized to the locality where tested. A variation in yield of 34.29 bushels per acre has been found in varieties grown and sold for seed within the state of Ohio.

11) A comparison of ears varying 2.44 inches in length, on the average shows a difference in yield of only 1.39 bushels per acre, as a 10

TABLE I. — *Continuous vs. Rotation Corn. Twenty Years Work.*

| System | Treatment | Applied per acre | | Av. yield per acre-bushels | | | | Average yield for 20 years |
|---|---|---|---|---|---|---|---|---|
| | | Per crop | Per 5-years | 1st period | 2nd period | 3rd period | 4th period | |
| Continuous . . . | None . . . . | — | — | 26.26 | 16.76 | 10.43 | 8.44 | 15.47 |
| Rotation (1) . . | None . . . . | — | — | 31.89 | 30.82 | 131.04 | 20.31 | 28.95 |
| Continuous . . . | Manure . . . | 5 tons | 25 tons | 43.13 | 40.11 | 34.62 | 30.22 | 37.02 |
| Rotation (1) . . | Manure . . . | 8 tons | 16 tons | 40.73 | 49.52 | 59.75 | 55.83 | 51.81 |
| Continuous . . . | Commercial fertiliser . . | 250 lbs | 1 250 lbs | 38.86 | 39.09 | 28.00 | 26.83 | 33.19 |
| Rotation (1) . . | | 320 ibs | 985 lbs | 35.78 | 49.54 | 53.91 | 44.10 | 46.49 |
| Rotation (2) . . | Manure . . . | 8 tons once in 3 years on corn | | | | | | (3) 60.20 |
| Rotation (2) . . | None . . . . | Average of 8 unfertilized plots | | | | | | (3) 35.19 |

(1) 5-years rotation. — (2) 3-years rotation. — (3) Average for 17 years.

TABLE II. — *The Value of Manure and Phosphorus. Three-year Rotation.*

| Treatment | Lbs per acre | Cost | | Average yield of corn per acre-Bushels | | Average value of increase per acre of all crop of the rotation | | | |
|---|---|---|---|---|---|---|---|---|---|
| | | | | Period 1st 1897-1905 | Period 2nd 1906-1913 | Period 1st | | Period 2nd | |
| | | s. | d. | | | s. | d. | s. | d. |
| Stall manure. . . . . | 16,000 | — | | 57.13 | 64.14 | 95 | 7 | 121 | 8 |
| Stall manure . . . . . | 16,000 | 9 | 4 | 62.28 | 73.45 | 157 | 0 | 189 | 6 |
| Acid phosphate . . . . . | 320 | | | | | | | | |
| Stall manure . . . . . | 16,000 | 6 | 8 | 61.97 | 72.05 | 148 | 0 | 155 | 11 |
| Floats . . . . . | 320 | | | | | | | | |
| None : | | | | | | | | | |
| Average 8 unfert. plots. . . . | — | — | | 36.99 | 32.87 | — | | — | |

year average — a difference no greater than might have been expected had the seed used been identical — while there is a slight decrease in length of ear in the shorteared strain, it has not materially affected the yield.

12) As a 9-year average, tapering ears have excelled cylindrical ears in yield by 1,65 bushels per acre.

13) Eight years continuous selection for bare, as compared with filled tips shows an average difference of 0.34 bushel per acre in favour of filled tips.

14) Comparing rough with smooth-dented ears (in variety "Clarage") the 7-year average yield favours the smooth type by a gain of 1.76

TABLE III. — *The Effect of Lime on Corn, Grown on Acid Soils, and the Value of Lime to the Entire Rotation. Average of 12 years.*

| Treatment (Fertilizers per acre for one rotation of 5 years) | Yield of corn per acre-Bushels | | Value per acre of all crop of the rotation | | | |
|---|---|---|---|---|---|---|
| | Unlimed | Limed | Unlimed | | Limed | |
| | | | s. | d. | s. | d. |
| I. Without nitrogen. | | | | | | |
| Phosphorus, 20 lbs in acid phosphate . . | 36.13 | 43.64 | 282 | 6 | 340 | 10 |
| Phosphorus, 20 lbs; potassium, 108 lbs, in muriate of potash . . . . . | 43.86 | 51.68 | 317 | 10 | 384 | 8 |
| II. Nitrogen, 38 lbs, with phosphorus, 30 lbs, and potassium 108 lbs. | | | | | | |
| Nitrogen in nitrate of soda. . . . . | 48.85 | 56.29 | 365 | 8 | 435 | 4 |
| Nitrogen in sulphate of ammonia . . . . | 45.80 | 57.68 | 333 | 6 | 433 | 11 |
| III. Nitrogen, 76 lbs in nitrate of soda, with phosphorus, 20 lbs, and potassium, 108 lbs. | | | | | | |
| Phosphorus in acid phosphate . . . . . | 49.06 | 55.73 | 390 | 11 | 429 | 10 |
| Phosphorus in bone meal . . . . . | 45.53 | 52.59 | 365 | 0 | 420 | 5 |
| Phosphorus in basic slag . . . . . | 48.71 | 52.07 | 384 | 10 | 402 | 5 |
| IV. Yard manure, 16 tons, estimated to carry nitrogen, 144 lbs. | | | | | | |
| Phosphorus, 48 lbs; and potassium 112 lbs. | 56.02 | 62.71 | 412 | 10 | 479 | 4 |
| Average of unfertilized plots . . . . . | 25.96 | 34.21 | 205 | 10 | 255 | 10 |

TABLE IV. — *Influence of the Time of Sowing on the Yield, Moisture Content and Loss of Weight.*

| | Date of sowing | | | | |
|---|---|---|---|---|---|
| | April 24-29 | May 4-10 | May 14-17 | May 25-28 | June 2-6 |
| Yield per acre, (average of 6 years), in bushels . . . . . | 63.86 | 68.49 | 67.07 | 54.87 | 44.32 |
| Moisture content, (average of 6 years) . . . . . | 23.73 % | 25.08 % | 25.93 % | 29.13 % | 33.52 % |
| Weight of grain obtained in April from 50 lbs ears as weighed in November, in lbs. (average of 5 years). . . . . | 35.60 | 34.55 | 33.90 | 31.65 | 30.45 |

bushels per acre. There is thus no foundation for the opinion, so widespread among growers, that lack of marked roughness is an indication of shortening of the kernels, reduced yield and deterioration in general.

15) Seed ears averaging 88.16 per cent grain have given a 6-year average yield of 64.64 bushels of shelled corn per acre, as compared with a yield of 65.06 bushels from ears averaging 76.38 per cent of grain.

16) A comparison of kernels from the butt, middle and tip portions of ears shows only 0.57 of a bushel difference in yield, as a 9-year average, and no difference in maturity or any important character.

17) Seed ears having 14,16 and 18 rows of kernels have been compared for 5 years. The 14-rowed ears led slightly in yield at Wooster and Germantown; the 16-rowed ears at Carpenter.

18) While the height of plant and ear varies with the season, selecting for high and low ears within a variety has resulted in changing very materially the relative height of ear and also the time of maturity. Low ears are associated with earliness. The comparative yield has not been reduced by selection for low ears.

19) Seed corn grown on rich, as compared with poor soil, and one plant per hill, as compared with five, though larger and apparently of better quality, has not given any larger yield, on the average, than the smaller ears grown under the poorer conditions.

20) The principal causes of barren plants are variations in season, in fertility, and in time and rate of planting. Such variations in conditions of growth have increased the amount of barrenness 200 to 2 000 per cent.

21) The cultivation in separate rows of grains from the same ear ("ear-row" tests) and the subsequent crossing of the best ears in isolated breeding plots show possibilities of increasing the yield of corn 5 to 10 bushels per acre, but it seems difficult to go much beyond this amount.

22) Of 13 first-generation crosses grown beside both parents, only two exceeded in yield the better parent variety by more than 2 bushels per acre.

23) A 4-year average gain of 3.9 bushels of shelled corn per acre has resulted from the use of the individual ear germination test. At 2*s* 1*d* (50 cents) per bushel for corn, this is a return of £ 1 7*s* 0*d* (§6.50) per hour for testing.

24) Experiments in thinning corn show a 4-year average gain of 8.47 bushels per acre in the case of untested seed and 6.31 bushels for tested seed. The average time required for thinning an acre of corn has been 5.7 hours.

25) As an average of 6 years' tests corn reached its maximum shrinkage August 1st. Based on shrinkage alone 2*s* 7¼ *d* (62.47 cents) for 70 pounds of ear-corn on August 1st is equivalent to 2*s* 1*d* (50 cents) on November 1st. While midseason and late varieties had 24.29 and 31.04 per cent of moisture, respectively, on November 1st, on August 1st they carried 10.08 and 10.69 respectively.

1074 – **Effect of Sulphur in the Cultivation of the Potato ; Experiments in Chili.** — OPAZO G. R. in *El Agricultor*, No. 109, pp. 129-130. Santiago de Chili, June, 1910. STARCH CROPS

It has been shown that it is not enough to add sulphur to any or every soil to obtain good results. As proof may be cited the opinion expressed by Boullanger in his communication of July 1912 to the Paris Academy of

Science: "Sulphur stimulates the active propagation and the reducing action of bacteria, which break up the complex nitrogenous compounds into ammonia. It also acts on nitrifying organisms". From this it is concluded nitrogenous matter must first be present in the soil.

Experiments made in 1914 at the farm Valparaiso en Nuñoa were carried out under the following conditions. Rows 54 feet long and 32 inches apart were marked out on soil rich in organic matter; the seed, bought at San Carlo, was disinfected with formalin, as it was of inferior quality. The experimental field, divided into 4 plots, each 51 square poles in area, gave the following results.

| Number of plot | Treatment | Crop of tubers per acre |
|---|---|---|
| | Per plot | bushels |
| 1. (Control) | — | 236 |
| 2. . . . . | Sheep's manure, well decomposed, 1129 lbs. . . . . | 245 |
| 3. . . . . | Sheep's manure, 1129 lbs. . . . . Sulphur 70.5 lbs . . . . . | 381 |
| 4. . . . . | Sulphur, 70.5 lbs. . . . . | 408 |

The application of sulphur alone increased the crop of tubers by 72 per cent the action of the sheep's manure being negligible, as the soil was rich in organic manure. The experiment was repeated the following year on a field which had carried lucerne for several years, so that it was sufficiently supplied with organic matter. Corahila potatoes were planted and sulphur was applied at the rate of 4 ½ lbs. per row of 54 feet. The experiment aimed at studying simultaneously the action of sulphur and of chalk, but only the results from the plots with and without sulphur are cited, as follows:

| Area of plots | Square poles | Crop of tubers. bushels |
|---|---|---|
| Plots *with* sulphur . . . . . | 701 | 1468 |
| Plots *without* sulphur . . . . . | 345 | 411 |

In this experiment the crop of tubers was increased by 65 per cent by the action of sulphur.

Conclusion. The author advises the use of sulphur on soils rich in nitrogenous matters or in countries where the requisite quantities of sheep or cow manure can be obtained.

The sulphur can be selected at the lowest price, as it is not necessary for it to be sublimed. In Germany iron pyrites containing the proper quantity of sulphur has been used, and the same results obtained as with the application of purified or sublimed sulphur.

1075 – **Experiments on the Cultivation of Meadows on Peat Soils in Russia.** — Fominykh V. A., in *Сельское Хозяйство и Лѣсоводство* (Agriculture and Sylviculture), Vol. CCLI, Year LXXVI, Pétrograd, June 1916.

The experiments were carried out in 1914 and 1915 in the province of Toula according to the following plan :

1) Harrowing with harrow of different types.

2) Harrowing and manuring.

4) Deep ploughing manuring and seeding with grass seeds after the removal of a preparatory crop.

5) Deep ploughing, manuring, chalking and seeding with grass seeds after the removal of preparatory crop. Nearly all the experiments were repeated on three plots of 72 sq. poles each. The manures applied were 2.9 cwt. basic slag per acre and 66 lbs of potash salts per acre. For chalking, each acre received 9 cwt. of chalk. With regard to the seeding, each acre received 11 lbs. per acre of the following : species *Trifolium pratense* L., *T. hybridum*, *T. repens*, *Phleum pratense* L., *Festuca pratensis* Huds., *Poa pratensis* L., *Poa trivialis* L., *Cynosurus cristatus* L., *Bromus inermis* Leyss. and *Lolium perenne* : in some cases *Agrostis vulgaris* Wish. and *Dactylis glomerata* L. were added. The first year, for various reasons, the experiments were not successful, especially with a preparatory crop. The results of the second year's experiments are summed up in the following Table.

*Experiments on the Cultivation of Peat Bogs.*

| | Average percentage increase over the same area (5.46 sq. yds.) | | | Percentage composition of species | | | |
|---|---|---|---|---|---|---|---|
| | | | | On the field | | In hay | |
| | In the number of plants | In the height of plants | In the bulk of the vegetation in the green state | Species of little use or useless | Useful species | Species of little use or useless | Useful species |
| | per cent | per cent | per cent | per cent | per cent | per cent | per cent |
| Control . . . . . | — | — | — | 93.2 | 6.8 | 97.0 | 3.0 |
| Harrowed . . . . . | 32 | 34 | 56.8 | 86.1 | 13.9 | 89.3 | 10.7 |
| Harrowed and manured . . . . . | 113 | 66 | 290.4 | 62.0 | 38.0 | 74.6 | 25.4 |
| Harrowed, manured and seeded . . . . | 234 | 88 | 347.0 | 37.6 | 62.4 | 37.0 | 63.0 |
| Harrowed, manured chalked and seeded | 230 | 101 | 438.0 | 45.0 | 65.0 | 29.3 | 60.7 |
| Ploughed deeply, manured and seeded. . | 232 | 108 | 637.7 | 28.0 | 72.0 | 20.5 | 79.5 |
| Ploughed deeply, manured, chalked and seeded . . . . . | 242 | 121 | 650.4 | 26.0 | 74.0 | 15.5 | 84.5 |

From the results obtained the following conclusions are drawn:

1) By a simple harrowing the crop of forage is increased on the average by 56.8 per cent.

2) Harrowing and manuring give an increase of nearly 300 per cent.

3) Harrowing, manuring and seeding give an increase of 350 per cent on the crop, causing at the same time a considerable modification in the flora of the cultivated peat bogs.

4) Complete cultivation, with deep ploughing, manuring and seeding gave an increase in crop of 600 to 900 per cent.

5) Experiments with weeded areas gave results of little promise, though not absolutely discouraging.

6) The increase of crop which follows the cultivation of peat bogs is determined by the following factors:

*a*) Increase in the nutritive capacity of the soil, which results in an increase in the number of plants per unit area and also in better development of the individual plants.

*b*) The light and worthless species disappear from the hay and are replaced by more valuable grasses and leguminous plants which are heavier and more tufted.

7) The importance of the cultivation of peat bogs is therefore not only quantitative but also qualitative, because with improved cultural methods the poor and useless species of the flora disappear very rapidly from the bogs and are replaced by useful species which, with favourable soil conditions, show good development of aerial parts as well as of underground parts.

With regard to the economic side of the experiment, the expenses incurred in the cultivation of peaty meadow were completely repaid during the second year, cost of drainage etc. being taken into consideration.

1076 – **Chemical Composition of Alfalfa as Affected by Stage of Maturity, Mechanical Losses and Condition of Drying.** — SWANSON, C. O., and LATSHAW, W. L. (Chemical Department, Agricultural Experiment Station, Manhattan, Kansas), in *The Journal of Industrial and Engineering Chemistry*, Vol. 8, No. 8, pp. 726-729. Easton, Pa., August, 1916.

Experiments on the chemical composition of lucerne (alfalfa) have been carried out for two years running, 1914, with a moderately dry summer and 1915, with an unusually wet season. The lucerne to be analysed was cut from duplicate and triplicate 0.1 acre plots, at the time of budding, one-tenth bloom, full bloom and at seed formation. As soon as cut, a sample was taken and spread in an attic room to dry. When the hay cut in the field was dry enough to stack it also was sampled, and the sample was taken to the same attic room. When the green sample was partially wilted a subsample was taken, and the proportion of leaves to stem was determined on an air-dry basis. Samples of alfalfa cut at the same stages of maturity were also obtained at the time of feeding.

The analytical figures show that lucerne cut at the time of budding contains a maximum proportion of ash and crude protein, together with a minimum of crude fibre and nitrogen-free extract. The latter increase

*Pounds of nutrients produced per acre in the total crop, leaves and stems. Calculated on a 10 % moisture basis.*

| | Stage of maturity | Ash | Crude protein | Pure protein % of crude protein in sun | Pure protein % of crude protein in shade | Crude fibre | N-free extract | Ether extract |
|---|---|---|---|---|---|---|---|---|
| | *1914* | lbs | lbs | per cent | per cent | lbs | lbs | lbs |
| Whole crop | Bud | 817.01 | 1 483.66 | 86.09 | 71.96 | 1 815.57 | 2 674.92 | 186.75 |
| | 1/10 bloom | 664.35 | 1 235.92 | 83.50 | 74.55 | 1 734.61 | 2 399.51 | 251.00 |
| | Full bloom | 534.61 | 967.17 | 86.04 | 80.55 | 1 589.52 | 2 167.56 | 218.50 |
| | Seed | 331.40 | 674.55 | 84.95 | 84.00 | 1 310.24 | 1 786.94 | 134 82 |
| Leaves | Bud | 487.06 | 1 145.44 | 75.79 | | 582.41 | 1 501.87 | 147.07 |
| | 1/10 bloom | 405.43 | 946.55 | 78.21 | | 556.12 | 1 422.32 | 167.22 |
| | Full bloom | 281.07 | 693.07 | 80.98 | | 429.39 | 1 258.41 | 159.95 |
| | Seed | 182.21 | 423.12 | 82.88 | | 286.00 | 804.76 | 93.93 |
| Stems | Bud | 329.95 | 338.22 | 68.62 | | 1 233.16 | 1 173.05 | 39.68 |
| | 1/10 bloom | 258.92 | 289.37 | 73.08 | | 1 178.49 | 977.19 | 83.78 |
| | Full bloom | 253.54 | 274.10 | 74.24 | | 1 160.13 | 909.15 | 58.55 |
| | Seed | 149.19 | 251.43 | 79.64 | | 1 024.24 | 982.18 | 40.89 |
| | *1915* | | | | | | | |
| Whole crop | Bud | 878.31 | 1 710.30 | 75.92 | 64.41 | 2 303.80 | 2 683.76 | 143.25 |
| | 1/10 bloom | 1 066.34 | 1 767.20 | 74.22 | 66.65 | 3 376.50 | 3 516.62 | 199.52 |
| | Full bloom | 1 165.08 | 2 088.10 | 75.78 | 70.79 | 4 100.71 | 4 338.46 | 269.99 |
| | Seed | 792.31 | 1 419.88 | 75.55 | 75.67 | 3 094.71 | 3 329.07 | 189.25 |
| Leaves | Bud | 436.63 | 1 121.35 | 72.30 | | 639.05 | 1 391.65 | 107.21 |
| | 1/10 bloom | 484.55 | 1 120.28 | 74.17 | | 821.54 | 1 522.86 | 149.80 |
| | Full bloom | 501.25 | 1 136.60 | 75.20 | | 796.69 | 1 891.82 | 180 29 |
| | Seed | 340.40 | 796.66 | 77.16 | | 619.83 | 1 359.82 | 111.55 |
| Stems | Bud | 441.68 | 588.95 | 56.86 | | 1 663.85 | 1 292.11 | 36.04 |
| | 1/10 bloom | 521.79 | 646.92 | 58.05 | | 2 554.96 | 1 993.76 | 49.72 |
| | Full bloom | 663.83 | 951.41 | 63.13 | | 3 313.02 | 2 546.64 | 89.70 |
| | Seed | 451.91 | 623.22 | 75.07 | | 2 474.88 | 1 969.25 | 77.70 |

as the maturation of the plant progresses, while the ash and crude protein decrease. The total amount of any or all nutrients produced per acre, depends to a large extent on the yield, as was shown by the fact that in 1914 the greatest amount of nutrients was obtained in the bud stage, while in 1915 the full bloom gave the greatest amount. The leaves and stems differ in content of ash, ether and nitrogen free extract, but the greatest difference is in the per cent of crude protein and crude fibre. The leaves contain, over 2 ½ times as much protein as the stems, while the stems contain over 2 ½ times as much crude fibre as the leaves. As in harvesting and handling lucerne there is a large loss of leaves, the hay comes to be richer in crude fibre and poorer in crude protein.

The alfalfa cured in the sun has a larger pure protein content, as determined by STUTZE'S method, than that cured in the shade. This difference is so great as to more than offset the influence of the loss of leaves, and it was also most pronounced in the alfalfa cut in the earlier stages.

The adjoined Table sums up the principal results of the experiments.

To sum up, the feeding value of hay is affected not only by mechanical losses due to handling, and the changes due to bacterial action, but also by chemical changes which have hitherto been little noticed or understood.

1077 – **Studies of the Timothy Plant.** – WATERS, H. J. in *University of Missouri, College of Agriculture, Agricultural Experiment Station, Research Bulletin*, 16, pp. 1-68, 37 fig. + 19 tables. Columbia, Missouri, June 1915.

Experiments have been conducted to determine the influence of the stage of maturity of timothy upon the yield, composition, digestibility and the nutritive value of the hay and also upon its palatability to animals. The investigations were begun in 1896 and continued with more or less interruption till 1909. The cutting of the timothy was done at different stages of maturity ; 1) about June 12th, when the plants were just in full head ; 2) about June 20th, when the plants were in full bloom ; 3) about July 1st, when the seed had formed; 4) about July 8th, when the seed was in dough ; 5) about July 16th, when the seed was ripe but not fallen. Harvesting and analysis were carried out in the usual way. In the first digestion trial two-year old high grade Shorthorn steers were used, and in the others, yearling grade Shorthorn steers. Tests of palatability were made with yearling beef steers fed on hay alone ; with Jersey cows in milk, fed with silage, corn, stover and mixed grain, in addition to the hay under test; and with yearling sheep fed only with mixed grain and the hay under test.

The following results were obtained :

*The yield of cured hay.* In two years, the yields of hay were greatest from the fourth cutting, when the seed was in the dough stage ; in two years, the yields were greatest from the third cutting when the seeds were beginning to form ; and in one year, from the fifth cutting, when the plants were fully ripe. The average result of all the trials shows the largest yield from the third cutting, when seeds were beginning to form.

If the yield from the third cutting were expressed as 100, the yields from the other cuttings would be 99.3 for the fourth cutting, 93.8 for the second, 89.7 for the fifth and 89.4 for the first. Thus, the difference

between the third and fourth cuttings was slight, averaging but 43 lbs of hay per acre. The difference between the yield of the first and last cuttings was small, but these cuttings produced an average of between 500 and 600 pounds less hay to the acre than did the third and fourth cuttings. Thus these intermediate periods, when the seeds have been formed, show the maximum yields of cured hay.

*The yield of digestible nutrients.* The yield of digestible nutrients is a much more accurate measure of the value of the harvest than the quantity of cured hay obtained. When measured by the standard of digestible nutrients produced, the earlier cuttings make a more favourable showing than when measured by the amount of cured hay produced. This is because the animals digest the early-cut hay more completely than they do the late-cut hay. The digestibility of timothy hay declines steadily as the plant develops, beginning as early as when the plants are in full head. The second cutting, when the plants were in full bloom, gave the largest yield of digestible dry matter, digestible protein, digestible fat, digestible crude fibre and digestible nitrogen-free extract of any of the five cuttings. In Table I are summed up the coefficients of digestibility of the different cuttings, given as the mean of all the trials.

TABLE I. — *Summary of average digestion coefficients of all trials.*

| Cutting | Digestion coefficient | | | | | |
|---|---|---|---|---|---|---|
| | Total dry matter | Protein | Ether extract | Crude fibre | Ash | Nitrogen-free extract |
| | per cent | per cent | per cent | per cent | per cent | per cent |
| First | 58.51 | 51.61 | 38.12 | 65.78 | 34.76 | 55.02 |
| Second | 54.88 | 50.09 | 35.62 | 58.73 | 32.01 | 55.42 |
| Third | 49.86 | 41.63 | 45.87 | 51.49 | 29.32 | 52.45 |
| Fourth | 47.39 | 38.78 | 48.85 | 48.98 | 31.76 | 48.97 |
| Fifth | 47.37 | 42.05 | 43.06 | 50.87 | 28.45 | 47.56 |

Table II sums up, for each of the five cuttings and as a mean of all the experiments, the absolute and relative yield of digestible substances; in this case the relative figures are expressed in terms of the greatest amount of each substance, reckoning this maximum as 100.

*Palatability of hay as affected by the time of harvest.* — Yearling steers fed entirely on timothy hay, when given free access to the hays from all the cuttings, in every case showed preference for them in the order in which they were cut. The fourth and fifth cuttings were left almost untouched until the hays of all earlier cuttings had been entirely eaten. Milking cows, having grain and other roughage besides the hays under test, were not so discriminating in their taste as regards the first three cuttings, but they, like the steers, left the fourth and fifth cuttings almost untouched until

TABLE II. — *Average yields of digestible nutrients per acre.*

| Cutting | Dry Matter | | Crude protein | | Ether extract | | Crude fibre | | Ash | | Nitrogen-free extract | |
|---|---|---|---|---|---|---|---|---|---|---|---|---|
| | Actual | Relative | Actual | Relative | Actual | Relative | Actual | Relative | Actual | Relative | Actual | Relative |
| | lbs | % | lbs | % | lbs | % | lbs | % | lbs | % | lbs | % |
| 1 | 1 995.7 | 91.7 | 134.7 | 91.9 | 42.8 | 79.1 | 777.0 | 98.9 | 77.1 | 93.4 | 899.3 | 83.1 |
| 2 | 2 175.3 | 100.0 | 146.5 | 100.0 | 43.8 | 80.9 | 785.7 | 100.0 | 82.5 | 100.0 | 1 082.1 | 100.0 |
| 3 | 2 038.8 | 93.7 | 113.3 | 77.3 | 50.9 | 94.1 | 761.7 | 96.9 | 69.8 | 84.6 | 1 040.6 | 96.1 |
| 4 | 1 913.7 | 87.9 | 98.0 | 66.9 | 54.1 | 100.0 | 699.9 | 89.1 | 67.4 | 81.7 | 995 5 | 92.0 |
| 5 | 1 774.8 | 81.6 | 91.9 | 62.7 | 37.5 | 69.4 | 683.1 | 86.9 | 63.0 | 76.3 | 892.6 | 82.5 |

the first, second and third cuttings were eaten. Sheep, full fed on mixed grain, appeared to eat one cutting with as much relish as another.

*The permanence of the stand.* — The results show conclusively that the time of cutting affects the length of life of a meadow. Early cutting tends to weaken the stand and late cutting to conserve the strength of the plant and prolong its life.

1078 – **The Artichoke as a Forage Plant.** — VASQUEZ A. in *Revista de la Cámara Agrícola Balear*, 18th year, No. 15, pp. 113-119. Palma de Mallorca, Aug. 10th 1916.

A good summer forage plant for dry countries must be deep rooted, and must use little water during the summer. Both these conditions are fulfilled by the cardoon (*Cynara Cardunculus*) and the artichoke (*Cynara Cardunculus* var. *Scolymus*). Given a favourable season, if these plants are sown in autumn their roots will reach a depth of 3 feet in less than 10 months and 4 feet in 20 months. Besides this, if the plant is cut in spring it develops few or no leaves during the summer, so that the amount of water lost by transpiration is much reduced ; the roots, however, continue to grow and strike down into deeper strata of the subsoil, and when the great heat is over they supply the plant with the subsoil, thus enabling new shoots to be formed.

The value of these forage plants has been proved by experiments carried on for several years in the province of Toledo, in Spain, by *Celedonio Rodrigañez.*

Various species of artichokes have been tested and the best results have been obtained with variety well known in Andalusia and the neighbouring provinces under the name of " arcaucil " or " alcaucil ", and on the market as " alcachofa verda de Provenza ". Among the cardoons the " cardo de España " was the most successful. Naturally species with many spines are to be avoided.

The cardoon is propagated by seed, the artichoke by cuttings, but if the latter cannot be watered they root with great difficulty. In this case seeds must be sown and the seedlings pricked out in 6 or 8 weeks into well worked soil ; the rows should be 32 inches apart, and the plants 32

inches apart in the rows, arranged on the square. Autumn is the best time for sowing, but it can also be done in the spring. The quantity of seed needed is 1 $^3/_4$ to 2 $^3/_4$ lbs per acre, and it should be soaked in water for 24 hours before sowing.

The necessary cultivation consists of four weedings per annum: in spring, May or June, August and winter.

One or two cuttings are made in spring and one in autumn, the first being made when the plants reach the age of 18 months. The first spring cutting may produce as much as 48 tons of green forage per acre. The second spring crop yields up to 8 tons per acre, and the autumn crop to 30 tons per acre.

To obtain the maximum of forage the crop should be mown just when it begins to come into flower, but as this procedure weakens the plant it is better to cut a little earlier, level with the ground, care being taken not to injure the collar of the plant. One labourer will cut and tie about one acre in a day.

The artichoke is not suitable for ensilage, but it makes good hay. The forage is readily eaten by cows and bullocks, horses, mules, pigs and goats. Milking cows fed exclusively with this forage do not show any change in their conditions nor in the milk that they produce.

The introduction of this forage plant into Majorca is recommended.

1079 – **Analysis of Cotton at the Chief Stages of its Development** (Publications of the Experiment Station of the "Golodnaia Steppe", Samarkand district). — ROGALSKIJ B. V. in *Журналъ Опытной Агрономіи* (Review of Agricultural Experiments), Vol. XVII., Book I, pp. 13-36. Petrograd 1916. FIBRE CROPS

In order to obtain preliminary data for a more exhaustive study, experiments have been carried out on the variety "King" which belongs to the Upland group (*Gossypium hirsutum* L.) and which seems to be well suited to the region of the Golodnaia Steppe (1) a part of the Russian possessions in Central Asia. The year 1913 was meteorologically favourable to cotton, and no damage was done by the harmful salts, especially chlorides and sulphates, which are present in remarkable quantities in the soil of this region. The cotton was cultivated on irrigated soil, which was clayey in texture, and not too impregnated with salts.

(1) The "Golodnaia Steppe" is a vast, slightly undulating plain, with a hardy perceptible slope; it is traversed by the railway and, according to approximate calculations, it possesses about 200 000 acres perfectly suitable for irrigation and the cultivation of cotton. See "Culture of Cotton in Russia" by KNIZE A. I., in «Ежегодникъ Главнаго Управленія Землеустройства и Земледѣлія по Департаменту Земледѣлія и Лѣсному Департаменту за 1907 годъ» (Annual Report of the Department of Agriculture and Forestry) S. Petersbourg, 1908, pp. 315-361. A description of the climatic conditions, soil and vegetation of the Golodnaia Steppe is given in the Compte Rendu of the Experimental Farm of the same name, for 1906, published by the Director, BUCHAEV, M. M., in «Труды Хлопковаго Комитета, томъ I». (Publications of the Cotton Committee), edited by the Department of Agriculture, St. Petersbourg, 1907, pp. 71-150. (*Ed.*)

The vegetative period of the plant extended over 174 days, the seeds being sown on May 7th. Analyses were made at four different times :

1) When the flower buds first appeared (June 7th).

2) At the beginning of flowering (September 22nd).

3) At the first picking (September 29th).

4) After the death of the plants, which was caused by the morning frosts (October 28th) .

The first two analyses were made on the whole plant ; in the last two the following parts were analysed separately : hairs (lint), seed minus its coats, seed coat, unripe capsules, fruit coats, stems and leaves.

The maximum growth of the plants is reached at the time of the first picking the average weight of a single plant being 196.67 gm. when green, and 82.10 when absolutely dry. When the plant dies the weight decreases on account of dessication and the loss of parts of the plant, the average green weight then being 116.93 and the dry weight 54.69.

The percentage of water in the green weight gives an unexpected result in comparison with other plants; this percentage is greater at the beginning of flowering than when the flower buds appeared (80.89 agains 73.81) ; in the two later periods it was 58.25 and 52.23 respectively. A possible explanation of this lies in the fact that in the early stages of development cotton is sensitive to the harmful action of the salts in the soil. Yet another explanation may be that during the flowering period the plant needs much water to promote an active circulation of food materials.

The appended table sums up the analytical results. This table, together with others, which are given in the text of the paper, show that the chief modifications occurring in the cotton plant during the various stages of its development are as follows :

1) As time goes on, there is of reduction in the relative amounts of nitrogen, nitrogen-free extracts and ash ; the maximum amounts of ash and N - free extract occur in the green parts of the plant.

2) The percentage composition of the ash shows that cotton demands potash more than anything else, then lime, and finally phosphorus. The ash also contains large amounts of chlorides and sulphates, the substances which work the greatest harm to the agriculture of the district. The plant fights against this harmful action by developing its vegetative organs rapidly.

3) As the plant develops there is an accumulation of raw cellulose and pentosans, which form the cell walls.

4) The analysis of the cotton itself, by the methods adopted by I. Konig, Gross and Bevan justifies the hypothesis that it is not pure cellulose, but a mixture of cellulose and hemi-cellulose. For cotton of the first quality, the composition is 71.190 per cent cellulose ($\alpha$ cellulose) and 21.355 per cent ($\beta$ cellulose).

5) The green parts of the plant and the seeds contain a high percentage of fats, and the greater part of the percentage in the whole plant occurs in these parts.

Taking the ash analysis as a basis, and reckoning 21 680 plants to the

*Chief constituents of cotton, variety King, grown in 1913 on the « Golodnaia Steppe ».*

| No. of sample | Description of sample | In 100 parts | | Percentage composition of dry matter | | | | | | | | |
|---|---|---|---|---|---|---|---|---|---|---|---|---|
| | | of the green substance of the plant | of the dry matter of the plant | Nitrogenous compounds | Raw cellulose | N-free extract | Starch | Pentosans | Raw fats | Ash | Total of estimated substances | Total of unestimated substances |
| | | | | per cent | per cent | per cent | per cent | per cent | per cent | per cent | per cent | per cent |
| 36 | *At time of appearance of flower buds* | — | — | 19.224 | 12.908 | 23.236 | 0.599 | 9.454 | 4.652 | 23.656 | 93.729 | 6.271 |
| 91 | *At beginning of flowering* | | | | | | | | | | | |
| | Plants with flowers | — | — | 17.466 | 21.543 | 18.019 | 0.816 | 9.289 | 2.664 | 12.494 | 82.291 | 17.709 |
| | Plants without flowers | — | — | 17.225 | 22.089 | 19.193 | 0.567 | 9.020 | 2.578 | 12.441 | 83.113 | 16.887 |
| | *First picking* | | | | | | | | | | | |
| 208 | Lint | 3.291 | 6.909 | 1.683 | 91.484 | 1.191 | 0.084 | 1.644 | 1.523 | 2.352 | 99.961 | 0.039 |
| 208 | Seed without coat | 6.915 | 8.213 | 23.762 | 4.325 | 8.582 | 0.482 | 3.884 | 48.988 | 3.454 | 93.477 | 6.523 |
| 208 | Seed coat | | 6.438 | 3.141 | 53.025 | 1.587 | 0.352 | 20.114 | 3.000 | 2.556 | 83.775 | 16.225 |
| 208 | Unripe capsules | 47.338 | 38.558 | 10.362 | 39.740 | 6.302 | 0.360 | 11.302 | 14.001 | 3.982 | 86.049 | 13.951 |
| 208 | Fruit coat | 4.249 | 9.135 | 3.231 | 28.770 | 14.901 | 0.449 | 16.100 | 1.139 | 4.783 | 69.373 | 30.627 |
| 208 | Stems | 27.602 | 20.376 | 4.171 | 41.952 | 9.722 | 0.673 | 19.256 | 1.239 | 4.818 | 81.831 | 18.169 |
| 208 | Leaves | 10.605 | 10.371 | 7.949 | 13.446 | 36.197 | 0.745 | 7.018 | 7.926 | 19.012 | 92.293 | 7.707 |
| | Whole plant | 100.000 | 100.000 | 8.235 | 37.986 | 10.414 | 0.462 | 12.209 | 10.898 | 5.534 | 85.738 | 14.263 |
| | *At time of death of plant* | | | | | | | | | | | |
| 240 | Lint | 2.919 | 5.263 | 1.357 | 92.127 | 1.023 | 0.103 | 1.465 | 0.692 | 1.839 | 98.606 | 1.394 |
| 241 | Seed without coat | 7.436 | 6.432 | 26.443 | 2.691 | 11.561 | 0.444 | 4.926 | 44.739 | 5.724 | 96.528 | 3.472 |
| 241 | Seed coat | | 5.852 | 3.842 | 51.526 | 1.642 | 0.224 | 20.009 | 1.423 | 2.539 | 81.205 | 18.795 |
| 243 | Unripe capsules | 20.915 | 14.589 | 10.035 | 39.815 | 6.409 | 0.375 | 11.257 | 13.937 | 3.972 | 85.800 | 14.200 |
| 243 | Fruit coat | 11.991 | 17.554 | 2.099 | 41.733 | 11.243 | 0.559 | 17.595 | 2.179 | 4.484 | 79.896 | 20.014 |
| 244 | Stems | 48.596 | 38.957 | 3.115 | 36.467 | 7.802 | 0.453 | 18.885 | 0.875 | 3.104 | 70.701 | 29.299 |
| 242 | Leaves | 8.143 | 11.353 | 8.820 | 18.421 | 27.240 | 1.039 | 5.749 | 6.618 | 20.936 | 88.823 | 11.177 |
| | Whole plant | 100.000 | 100.000 | 6.045 | 37.470 | 9.934 | 0.494 | 14.304 | 6.508 | 5.567 | 80.322 | 19.698 |

acre, it is calculated that in order to avoid the exhaustion of the reserves of phosphoric acid, potash and nitrogen in the soil, the following manure must be applied to each acre of cotton grown: 1 cwt. superphosphate (20 per cent), 2 cwt. potash salts (30 per cent) and 3 cwt. nitrate of soda, containing 15.5 per cent of nitrogen. If nitrification and the fertilizing matters contained in the irrigation water are taken into account, rather less of the above substances will be needed. Calculations for chalk and magnesia have not been made, as they are so abundant in the soil of the district.

1080 – **Osier Culture in France.** — I. MIR, E. Osier Culture in France in *Vie agricole et rurale*, 6th year, No. 32, devoted entirely to osier culture, Paris, August 5th, 1916, pp. 89-90. — II. CAMUS, E. G. The various Osiers cultivated in France and in neighbouring countries. *Ibidem*, pp. 95-98, 7 fig. — III. DE LA BARRE, G. The national school of osierculture and basketwork. *Ibidem*, pp. 105-106, 1 fig. — IV. DR. BONNARDOT. Co-operative osier selling. *Ibidem*, pp. 106-107.

I. Forty years ago, France devoted about 175 000 acres to osier culture, and, at this time, she supplied most of the European markets with osiers, especially in Germany, England, Spain and Switzerland. The cultivation of osiers has declined, little by little, until now only about 20 000 to 22 500 acres are grown. Osier culture has suffered because:

*a*) Its progress was hindered at one time by the inability of the growers to organise the sale.

*b*) In many districts the osierbeds were cultivated by hand and, in the absence of sufficient labour, were allowed to become foul.

*c*) Pure varieties were rarely planted, and the vigorous varieties choked out the more delicate ones so that the osier beds were shortlived.

*d*) Attempts were made to establish osier beds on unsuitable soil

II. This article gives a systematic classification of the various osiers cultivated in France, with their scientific and common names. Basket work needs especially the varieties which yield long slender twigs, elastic to bending and to twisting.

The colour and hairiness or roughness of the plants is not important from the botanical point of view, as these conditions depend upon the environment of the individuals, but they must be taken into account in the practical cultivation of the osiers. These characters are maintained by the practice of taking cuttings for planting out osier-beds.

Commercially, much confusion exists between the names used for the cultivated varieties. The same name is often applied, according to the district, to several species or varieties, and the same variety is often known under several different names. The Chamber of French Osier Growers has appointed a Commission of Nomenclature to remedy this state of things. The chief species and varieties of osiers cultivated in France are the following:

(1) *Willows with the scales of the floral catkins selfcoloured, falling off before the ripening of the fruits. — Salix alba* L. (white willow, silver willow). Names recommended by the Commission of Nomenclature.: Osier blanc, suisse, ardennais. Other names: Vuisier, Saouzé, Saudre, Bray. In cultivation, one-year old twigs are often 6 ½ feet long, varying in colour,

often being pale grey, dashed with green, or yellowish, or even olive-green. Very widely cultivated.

*S. Alba* L. var. *Vitellina*, Ser., *S. Vitellina* L. Names recommended: *S. Vitellina*, var. rouge, var. jaune, Amarinier, Osier de tonellerie. Other names: Osier de Metz, osier rouge (a name leading to confusion) osier jaune, Bouton blanc, Grand roux, Saule doré. The branches are longer and more slender and flexible than in the preceding case, with, at the end of the summer. a colour varying from citron yellow to orange yellow or sometimes to coral red. These two species above described yield a much valued type of osier.

*S. fragilis* L. Names recommended :. Saule fragile or Osier fragile, var. pourprée, Osier franc. Other name : Osier rouge (leading to confusion). This osier is weak at the joints, but still it is much used in semifine basketwork.

With these species may be compared *S. pentandra* L. and *S. babylonica* L.

(2) *Catkins appearing before the leaves ; scales persistent, discoloured*: *Salix viminalis* L. Names recommended: Osier viminal, O. jaune, O. vert, O. des vanniers, queue de renard, merrin brun. Other names: lusse, pêcher jaune, O. noir de Hollande, O. de longues feuilles.

The shoots reach a length of 10 to 13 feet. This excellent species comprises a rather large number of varieties, of which one is known abroad as the " French Osier ".

*S. purpurea* L., *S. monandra* Hoff. Names recommended: O. à une étamine, Sardine, Verdiau. This is known in England as *Dick* with varieties, Dick with red buds, black Dick, old Dick and Dick of the fields. Not very much cultivated.

Near this willow comes *S. rubra* Huds, or the red willow of botanists, which is specially recommended for introduction into cultivation.

(3) *Catkins appearing at the same time as the leaves, scales self-coloured, persistent* : *S. triandra* L. This includes two botanical varieties : *S. amygdalina* L. for which the names osier brun or vache brune are recommended and *S. triandra* L. Brunette, Grisette, Saule à feuilles d'amandier or à à trois étamines.

Other varieties suggested for use in basket work are : — *S. cinerea* L. ; *S. daphonides*, *S. Caprea* L., *S. aurita* L., *S. nigricans* Sm., and *S. repens* L., var. *argentea* Koch.

III. The National School of Osier Culture and Basketwork, founded by resolution on Jan. 3rd., 1905, is situated at Fayl-Billot (Haute Marne). The length of training is three years, with a faculty course for adults. A diploma is awarded at the close of the school course to the students who have satisfied the examiners. The school has organised experimental fields where 80 varieties are cultivated. A rational nomenclature is sought. Various cultural methods are investigated dealing with manuring, distance of planting, depth of soil, length and thickness of cuttings, methods of checking parasites, grafting especially on poplar, etc.) ; and laboratory experiments have also been carried out on the coefficients of torsion and

bending of osiers etc. In addition a course of basketwork has been founded and three workrooms have been established for various kinds of basket making.

IV. For thirty years osier cultivation has been carried on in the department Cote d'Or on soil which is not very damp and which is most unfertile. The plantations occupy about 1500 acres. In 1913 the harvest was exceptional in quantity and quality; this caused a considerable drop in the price offered by buyers, which fell from £1 per cwt. to 9*s* 0*d*. or 9*s* 5*d* per cwt. To remedy this state of affairs, the producers decided to sell their osiers themselves and to this end they formed the Co-operative Society of Aisrey. This society, founded in August 1913, has 140 members, from 15 villages. The results, have been as satisfactory as was hoped, and the drop in price was stopped by the formation of the Society.

CROPS YIELDING OILS, DYES AND TANNINS

1081 – **Nitrogen Requirements of the Olive-tree.** — See No. 1068 of this *Bulletin*.

1082 – **The Dyeing Value of Some Indian Dye-Stuffs.** — SRIVASTAVA, I. P. (Technological Chemist, Cawnpore) in *The Agricultural Journal of India*, Special Indian Science Congress Number, pp. 53-64. Calcutta and London, 1916.

The following investigation into the dyeing values of certain natural colouring matters still used by native dyers was undertaken under the orders of the Director of Industries, United Provinces.

The colouring matters were tried on wool and cotton by some of the more important methods of modern dyeing. The inquiry has so far been prosecuted in regard to the following colouring matters :

(1) HARSINGHAR (*Nyctanthes Arbor-tristis*). — The flowers of this tree, which occurs in abundance in the United Provinces, contain a beautiful yellow colouring matter soluble in water, also in alcohol.

*Harsinghar* gives brilliant yellow shades with all mordants on wool. On wool mordanted with bichrome and oxalic acid previous to dyeing a beautiful brown is obtained. The dyeings on wool possess good fastness to milling with soap and soda.

(2) TUN (*Cedrela Toona*). — This tree is said to occur largely in the sub-Himalayan forests. The colouring matter is contained in the flowers which are dried and sold. The principal constituent of the flowers is a yellow dye.

*Tun* dyes the best shade on wool which has been previously mordanted with aluminium sulphate and tartar. The dyeings on wool are, however, not very fast to milling with soap and soda.

(3) TESU or DHAK (*Butea frondosa*). — This tree is found in abundance all over the United Provinces. The flowers contain a yellow colouring matter.

*Tesu* dyes on wool shades varying from brown to dull crimson according to the mordant used. The dyeings are fairly fast to milling.

(4) HALDI or TURMERIC (*Curcuma longa*). — The plant which yields *haldi* is grown all over the United Provinces. *Haldi* is a dried rhizome or tuber and is a well-known constituent of curry powder. It contains a

brilliant yellow colouring matter which however possesses the serious drawback of being changed into red by soap or by alkalis.

The colouring principle is called *curcumin*; it is sparingly soluble in cold water, more freely in hot water, and completely in alcohol.

The best shade is obtained on wool previously mordanted with bichrome and oxalic acid. The fastness of the dyeings on wool is fair.

(5) ARUSA (*Adhatoda vasica*). — The leaves of this plant yield a yellow colour. *Arusa* is an ever-green plant and is found in the United Provinces. The colouring matter is soluble in water and also in alcohol. On wool the best shade is obtained on the same mordant as above. The fastness of the dyeings on wool is fair.

(6) NASPAL or POMEGRANATE RIND (*Punica granatum*). — The rind of the fruit contains a tanning substance and also a yellow colouring matter.

Pomegranate rind dyes very good shades varying from yellow to full brown on wool. All these possess very good fastness to milling.

(7) JANGLI NILL or WILD INDIGO (*Tephrosia purpurea*). — This is a small woody annual occurring in abundance in the United Provinces.

Clarke and Banerjee have discovered in the leaves of this plant a colouring principle allied to quercetin or quercitrin (vide *Trans. Chem. Soc.* 1910, V, 97). Owing to the difficulty of separating the yellow principle from the chlorophyll, efforts to obtain a pure yellow from *Tephrosia* have only been partly successful. The colouring matter is, however, of great value, as it yields dyeings which are compratively fast to light, washing and milling. On account of the abundance of the plant it may be worth while devising a suitable process for extracting the yellow colouring principle. A decoction of the leaves of *Tephrosia* dyes wool mostly dull brown shades in conjunction with the various mordants, the most brilliant shade being that on tin mordant. The dyeings, however, possess very good fastness to milling.

(8) SAFFLOWER or KUSUM (*Carthamus tinctorius*). — The dried flowers of safflower plant contain a colouring matter which before the introduction of coal-tar colours was higly prized all over the world. It produces on cotton beautiful shades of red varying from a full crimson to the most delicate pink.

Although the yellow colouring matter in safflower is generally regarded as useless, Hubner has shown that certain mummy cloths which he examined had been dyed with safflower yellow. The Egyptians were therefore acquainted with the right way of using safflower yellow.

Safflower yellow does not dye cotton in conjunction with aluminium and tin mordants. Wool, however, possesses affinity for the yellow colour and may be dyed direct.

(9) MAJITH (*Rubia cordifolia*). — The root and twigs, of this plant contain a dye-stuff identical with madder. *Majith* was largely used in India before the advent of synthetic alizarine. It is undoubtedly one of the most valuable indigenous dye-stuffs., Wilth its help red, maroon, and bordeaux shades of excellent fastness to light can be dyed on all fibres. It is the basis of a great many colours required by the calico-printers. *Majith*,

as might be expected, dyes very fast shades on both wool and cotton. The best results on cotton are obtained by using the Turkey Red process.

(10). CUTCH or KATHA (*Acacia catechu*). — The catechu tree is found in several parts of India. Catechu may be applied to all fibres, though it is most largely used for dyeing cotton. Catechu brown is one of the fastest colours known.

(11) PATANG or SAPPAN WOOD. (*Coesalpinia sappan*). — This tree is said to grow abundantly in Cuttack and in Central India. The colouring principle *brazilein* exists in a colourless condition in the freshly cut wood and is by oxidation converted into the true colouring matter *brazilein. Patang* is a valuable colour-yielding material. It can be used for producing brilliant shades of red, crimson, and purple and is very suitable for calico-printing.

(12) LAC DYE. — This substance is of animal origin.

Lac dye is manufactured largely in the North Western Provinces, though like other natural products it has lost much of its former importance. Lac dye is dyed on wool; chiefly on tin mordant. It yields beautiful scarlet and crimson shades.

(13) INDIGO. — The use and importance of Indigo are too well known to need any comment.

(14) KACHNAR (*Bauhinia racemosa*). — This is a shrub very common in the North Western Provinces. The bark yields a red dye which is largely associated with tannin. The dye is not very bright but nevertheless it may be employed for dyeing dull reds on cotton. It may be dyed on cotton without the help of any mordant. The bark can be had in any quantity and may be of service to tent manufacturers who require a dull red colour for the inside of tents.

(15) PEEPUL (*Ficus religiosa*). — The roots of this well-known plant were examined and found to contain a red dye which gives a good pink on cotton mordanted with alumina. The shade so obtained is fairly fast.

(16) RED SANDERSWOOD (*Pterocarpus santalinus*). — This is a small tree occuring in Southern India. The wood yields a valuable red dye called santalin.

Sanderswood dyes wool without any mordant. Very good shades of satisfactory fastness are obtained on cotton, on tin and alumina mordants. The dye does not dissolve in water though it is freely soluble in alcohol and acetic acid.

(17) ROLI or KAMELA POWDER (*Mallotus philippinensis*). This dye is obtained from a small tree found along the foot of the Himalayas and in Southern India. The fruits have red glands on the surface of the capsule and the powder is obtained by crushing or breaking up these glands. Kamela gives a beautiful yellow on silk mordanted with alumina. The dyeing must be done in an alkaline bath.

(18) AKHROT (*Juglans regia*). — The bark yields a valuable brown dye.

(19) KATHAL (*Artocarpus integrifolia*). — The wood yields a yellow

dye which may be dyed on cotton on alumina mordant. The shades obtained are good and fast.

(20) BARBERRY (*Raswat*). — The bark, roots, and stem of this plant are rich in a very good yellow dye. This plant is plentiful in the Kumaun Hills.

*Raswat* is used chiefly as a dye for silk. It was dyed on cotton mordanted with alumina, but dull shades were obtained. This was perhaps due to the presence of chlorophyll in the preparation which came from Naini Tal.

(21) *Rhus cotinus*. — The wood of this plant yields a dye similar to young Fustic. On cotton mordanted with alumina an orange yellow colour was obtained; with tin an orange red was obtained. The dyeings are, however, not fast to alkalis and soap.

**1083 – The Harvesting and Cultivation of Medicinal Plants in France.** — *Feuille d'Information du Ministère de l'Agriculture*, 21st year, No. 28, pp. 12-13. Paris, July 14th, 1916.

STIMULANT, AROMATIC, NARCOTIC AND MEDICINAL PLANTS

The question of the production of medicinal plants in France, as in other countries (1) is one of great importance. The history of the cultivation and harvesting of medicinal plants is given in this paper and the fact is recalled that the list of simple indigenous drugs inscribed in the Codex of 1908 comprised not less than 110 species. Although most of the indigenous medicinal plants grow naturally over large areas, yet several among them grow best and most abundantly in certain districts where the temperature and soil are specially favourable to their development and to the elaboration of their active principles; so much so that the same species, cultivated in neighbouring districts differing in soil and exposure, will in the one case acquire a very great toxicity, while in the other its properties are much less active. Digitalis is a striking example of this type of medicinal plant; that grown in the Vosges is very rich in digitalin, while that from the Ardennes contains but very little. This instance shows that the cultivation of certain plants demands special precautions, definite knowledge and scientific control. To entrust the work to inexperienced hands would be to vitiate the results.

The article outlines the principles which should govern the cultivation and harvesting of the plants and gives, besides indications of the price and the extent of sale of each, the following list of the chief medicinal plants grown in France, classified according to the part which is of use:

*Flowers*: Arnica, blue-bottle (with calyx), mullein, borage, colchicum, poppy, marshmallow, lavender, mallow, milfoil (clusters), lily-of-the-valley, white dead-nettle (without calyx), ground ivy, chamomile, elder, lime (bracts), coltsfoot, Auvergne violets, pasque flower, meadow sweet (clusters), hawthorn, bugloss, marioram, broom.

*Leaves*: Wormwood, agrimony, silverweed, woodruff, cranesbill, borage, shepherd's purse, yellow cheese-rennet (clusters), catmint, blackcurrant, eyebright, ash, goat's rue, yellow melilot (cut tips), mercury, St. John's wort, lily-of-the-valley, walnut, poppy, plantain, meadow sweet, bramble, soapwort, henbane, ground ivy, balm-mint, thorn apple, night-shade, hart's tongue, wild thyme, figwort, tansy, valerian, veronica, vervein.

(1) See *B.* July 1916, N. 757. (*Ed.*).

*Roots*: Restharrow, elcampane, bistort, bryony, carex, couchgrass, comfrey, chicory, dock, dandelion, polypody, soapwort, Solomon's seal, tormentil, valerian.

*Bulbs*: Colchicum.

*Fruits*: Whortleberry, caraway.

*Buds*: Poplar, pine.

*Various*: Cherry stalks, Horse Chestnut.

*Marine plants*: Corsican Moss, laminaria.

Some plants because of the high prices that they command on account of the variety of ways in which they are used and their world-wide consumption, are cultivated on a large scale. The most notable among these are: belladonna, (of which the price has risen from about 7 ½ *d* to 8*s* 6*d* per lb), marsh mallow, mallow, mullein, henbane, borage, chamomile, peppermint, valerian, aconite, balm, hyssop, sage, male-fern, black-currant, horse-radish, scurvy grass, parsley, coriander, angelica, small-centaury, gentian, sweet marjoram. Attention is also drawn to the cultivation of saffron and mustard.

HORTICULTURE

1084 – **Summer Treatment of Greenhouse Soil.** — GREEN, W. J. and GREEN, S. N. in *Ohio Agricultural Experiment Station, Bulletin* No. 281, pp. 53-68, 5 fig. + 2 diagrams. Wooster, Ohio, 1915.

For an interval of six to ten weeks during midsummer, vegetable greenhouses usually stand idle, because vegetables grown in the open air are abundant and cheaper. The greenhouse grower does not consider it necessary to renew the soil annually, an operation which is decidedly costly. The general opinion is that the intense heat under glass during July and August, together with the dryness of the soil, will destroy all insect life as well as fungi and bacteria. This view is open to serious doubt. In order to determine the practical difference between the various methods of treating the soil during the summer months when cultivation is stopped, experiments have been carried out at the Ohio Station greenhouses. The following methods of treatment have been compared:

*New Soil Plot.* Each year, just before the crop was to be planted in the autumn, the entire soil of this plot was removed and replaced with fresh soil. This soil was the ordinary "Sod compost" prepared according to the usual Ohio methods. The spring crop of tomatoes received a light mulch of manure.

*Straw Mulch Plot.* This and the succeeding plots were of soil that had been cropped for at least three seasons. Immediately after the crop was removed each spring this plot was given a covering of from four to six inches of wheat straw. Both the straw mulch and the manure mulch plots were kept well watered during the summer, though excessive wetness was avoided. Most of the straw was removed before preparing this bed for the autumn crops, as it decayed but little and could not be worked into the soil. A covering of straw was given to the spring crop of tomatoes, just as the fruit began to ripen.

*Manure mulch plot.* This plot was treated in the same way as the preceding one, except that the straw was replaced by a mulch of very fresh manure. The latter was sufficiently decomposed by autumn to

be worked into the soil before planting. A mulch of manure was also given to the spring crop of tomatoes.

*Dry-Plot.* During the time between seasons in the summer this plot remained bare and unwatered. Before the autumn crops were planted it received fresh manure which was worked into the soil. The spring crop of tomatoes also received a mulch of manure.

On the plots thus treated two crops of tomatoes were grown each year, one in autumn and one in spring. The figures given in Table I sum up the results obtained from 1908 to 1914.

TABLE I. — *Tomato Crop; Average Weight per Plant.*

| lots | Autumn Crop (1908-1913) | Spring Crop (1909-1914) |
|---|---|---|
| | lbs. | lbs. |
| New soil | 4.1 | 8.4 |
| Straw mulch | 3.4 | 6.3 |
| Manure mulch | 3.7 | 7.4 |
| Dry plot | 2.1 | 6.8 |

In addition lettuces were grown from 1911 to 1913, and Table II gives the results obtained during this period, as a general average of spring and autumn crops.

TABLE II. — *Lettuce Crop; Average Weight per Plant.*

| Plot | Spring and Autumn Crops 1911-1913 |
|---|---|
| | oz. |
| Soil cultivated and manured for 10 years | 4.40 |
| New soil | 3.55 |
| Straw mulch | 2.98 |
| Manure mulch | 4.18 |
| Dry plot | 4.11 |

From the results of these experiments and from others carried out with cucumbers, the following conclusions are drawn:

1. The common greenhouse crops of Ohio, tomato, cucumber and lettuce, require different soil conditions for maximum yields.

2. Lettuce can be grown continuously with safety on unrenewed soil with application of manure.

3. Tomatoes and cucumbers are sensitive to conditions found in

old soil and the yields are quickly affected, necessitating treatment or renewal of soils after two or three seasons' use.

4. The drying of the soil during the idle summer period seems to adversely affect the soil conditions for tomatoes, but not for lettuce.

5. Summer manure mulch is recommended to check adverse soil conditions for tomatoes and cucumbers.

6. Summer mulch may not obviate the necessity for soil sterilisation, but, in part, it appears to answer that purpose.

FRUIT GROWING

1085 – **California Grapefruit.** — SHAMEL, A. D. in *California State Commission of Horticulture Monthly Bulletin*, Vol. IV., No. 7, pp. 239-240. Sacramento, Cal., July 1916.

The early plantings of grapefruit in California were made with Florida varieties which were selected without much knowledge of their adaptability to California conditions.

It is only in recent years that any data has been gathered as to the comparative value of several varieties with regard to their adaptability. Among these varieties the Marsh Seedless takes the first place.

It has also become evident from these studies that the grapefruit planted on rather light, porous and sandy soils produce fruit of a superior commercial quantity, colour and texture of rind to those planted on the heavier clay soils. While most of the older plantations were made in the lower valleys, most of the more recent plantings have been made on higher lands having lighter soil of more suitable texture. The other Florida varieties most largely grown in California are the Triumph and Duncan.

The orchards of Triumph grapefruit in Southern California are very productive, but the fruit is rather small and contains numerous seeds, from 25 to 50 ; this seriously hinders its spread in the commercial orchards.

The Duncan grapefruit trees tend to produce large round fruits, but these also contain too may seeds for market purposes. The other varieties cultivated to a certain extent are the Imperial, Colton Terrace Seedling, Aurantium, Commercial and the Blood. The results so far obtained with those varieties can hardly be considered successful, so that the variety Marsh or Marsh Seedless will gradually replace all the others.

According to Vaile 600 acres of grapefruit trees are in bearing in California, capable of yielding 250 carloads of fruit per annum. 1 100 additional acres of trees under five years of age will soon double the present output.

According to the same writer, Florida has 16 000 acres of grapefruit trees in full bearing, yielding 8 000 carloads of fruit, and in addition about 45 000 acres of trees under five years of age which will eventually yield at least 35 000 carloads of fruit.

Porto Rico, in 1913, exported to the United States 500 carloads of fruit, and Cuba, in 1912, 250 carloads. The export from Jamaica is also rapidly increasing. Although the cultivation of grapefruit in California is esta-b lished on a sound basis, Vaile thinks that much prudence should be exercised in the future extension of the orchards. Two facts must be borne in mind in this connection. First of all, the importation of grapefruit into California has been stopped in order to prevent the introduction of insect pests and fungous diseases by this means, and probably other States where the

grapefruit is cultivated will take similar steps. This will force California to provide for its own consumption by its own production. Secondly, the period of ripening of California Marsh Seedless grapefruit is during the summer months when no other district has a ripe crop available to supply the Eastern markets. The success of the grapefruit industry in California will largely depend upon a careful study, by the growers, of the condition of fruit ripening and on the adoption of a commercial standard of ripeness. In this connection the analyses made by the Laboratory for Agricultural Chemistry at Los Angeles on various samples of grapefruit from California and Florida are of special interest. The average composition of the « standard » grapefruit of the variety Marsh Seedless, grown on one of the best southern plantations, is as follows :

| | |
|---|---|
| Average weight per fruit | 20 1/4 oz. (574 gm) |
| Rind | 28.72 per cent |
| Pulp | 71.03 per cent |
| Juice | 69.63 per cent |
| Number of seeds, per fruit | 10.6 |
| Total solids in pulp | 12.92 per cent |
| Soluble solids in juice | 11.52 per cent |
| Total sugar in juice | 7.50 per cent |
| Acid in juice | 1.28 per cent |
| Solids acid ratio | 9.0 |

It may be taken as proved that the "standard" type of the Marsh Seedless variety can be isolated in propagation by bud selection based on the records of the performance of individual trees. This method of selection was put forward at the California Fruit Growers' Convention at Visalin, and if intelligently applied it will probably result in a great improvement in the type, both as regards quantity and quality of production.

## LIVE STOCK AND BREEDING.

1085 – **The Effects of Snake Venom on Domestic Animals and the Preparation of Antivenomous Serum.** — MITCHELL D. T. in *The South African Journal of Science*, Vol. XII, No. 9, pp. 237-354. Capetown, April, 1916. HYGIENE

Investigations undertaken in the last quarter of the nineteenth century have shown that the active principles of snake venom are soluble proteins belonging to the same class as enzymes and toxins ; they have also proved that the immunisation of animals against bites can be effected in the same manner as against contagious diseases, and that the serum of immunised animals possesses specific antivenomous properties. A classified list of venomous snakes and a description of the venom organs (glands, canals and fangs) are given.

The quantity of venom which can be obtained from a snake at one time depends on a number of factors, namely : the species, the condition and size of the individual, the length of time which has elapsed since the last meal, and the interval since its last bite ; this quantity is also influenced by the

duration of the eventual captivity of the snake. The largest quantity can be obtained from the king cobra and the smallest from some species of *Hydropinae.* From a cobra (*Naja Haje*) 200 mgms. of dried venom, corresponding with 670 mgms. of the fresh substance. have been obtained in the course of an experiment which lasted four months.

The principal physical characteristics of the venoms, which vary greatly according to the species ; colour, taste, state after drying, and solubility, are described. The general action of venoms is then considered, and after a recapitulation of the different researches on the question, the conclusion is drawn that these products are very complex liquids containing some of the following constituents, all of them not being present in every venom.

1) *Neurotoxins.*

*a*) Acting principally on the respiratory centre.

*b*) Acting principally on the vaso-rotatory centre.

*c*) Acting principally on the nerves and the discs of the fibres of the striated muscles, particularly of phrenic muscles.

2) *Agglutins.*

3) *Cytolysins.*

*a*) Haemolysins.

*b*) Leucolysins.

*c*) Haemorrhagins.

4) *A fibrin enzyme.*

5) *A proteolytic enzyme.*

6) *Antibactericide substances.*

The neurotoxins constitute the most active principles of most venoms.

The effects of the bite of venomous snakes are then described . The neurotoxins, which have an affinity for the respiratory centres, predominate in the venom of the *Colubridae.* This class, of which with regard to the action of the venom, *Naja tripudians* is typical, produces general paralysis with a specific paralysis of the respiratory mechanism. In the venom of the *Viperidae* the toxins acting on the blood and circulatory system predominate ; this venom, particularly that of *Vipera russellii,* acts on the blood and circulatory system producing a sudden appearance of various symptoms, with a tendency to an extension of the gangrenous destruction from the local lesion, if the animal survives the acute stage.

The first scientific attempt to immunise against snake venom was made in 1887, SEWALL having then immunised pigeons by small repeated doses, so that they were afterwards able to withstand ten times the fatal dose of *Crotalus* venom In 1892 CALMETTE employed venom heated at 80° C to immunise rabbits, but his serum, being originally from *Colubridae,* had but little action for the *Viperidae.* Pure specific sera have since been prepared by others, for example:

Lamb's serum, derived from *Naja tripudians* (strongly antitoxic against cobra venom).

Lamb's serum, derived from *Vipera russellii* (anti-toxic against *Viperinae* venom).

Noguchi's serum, derived from *Crotalus* (anti-toxic against *Viperinae* venom, but without effect against cobra venom).

Noguchi's serum, derived from *Ancistrodon* (anti-toxic against *Viperinae* venom but not against *Colubrinae* venom).

Attempts have been made with some success, to prepare a polyvalent serum, without however as yet, providing one sufficiently polyvalent to satisfy all requirements.

Practical details of the way of preparing the serum by Calmette's method and by the Watkins-Pitchford method, used in Natal, are given. In order that the estimation of the efficacity of the serum should be valuable, the minimum fatal dose of the venom must be known and this varies with each snake. The following table, resulting from a series of experiments carried out in the Pietermaritzburg laboratory and made on the commonest snakes of South Africa, is published.

| Snake. | Animal employed | Minimum fatal dose per kg. of animal employed. Intravenous injection. | Hypodermic injection. |
|---|---|---|---|
| *Bitis arietans* | Rabbit | 0.5 mgms. | 1.7 mgms. |
| *Dendrastis* sp. | " | 0.225 " | 0.325 " |
| *Naja nigricollis* | " | 0.9 " | 1.25 " |
| *Naja flava* | " | 1.5 " | 2 " |
| *Causus rhombeatus* | " | 4 " | 7.5 " |
| *Sepedon haemachates* | " | 0.21 " | 3 " |

The Pietermaritzburg laboratory has prepared a polyvalent serum against the venoms of the mamba, the puff adder (*Bitis arietans*) and the cobra (*Maja* spp.). According to the writer the preparation of a polyvalent serum requires much time ; moreover the animal which should have been hyper-immunised is likely to die, and finally the serum obtained has not always a satisfactory efficacity towards all its components. It is preferable to prepare a polyvalent serum by simply mixing the monovalent sera of maximum strength.

1087 – ***Deraiophoronema cameli*, a New Species of Filaria from the Camel's Lung.** — ROMANOVITCH, in *Comptes rendus des séances de la société de Biologie*, Vol. LXXIX, No. 15, pp. 745-746. July 1916.

In the Kirghiz steppe two cases of the death of a camel have been recorded, caused by a new filaria of the lungs. The parasite has been investigated at the Veterinary Laboratory of Petrograd and named *Deraiophoronema cameli* n. g. n. sp.

1088 – **Metabolism of the Organic and Inorganic Compounds of Phosphorus.** — FORBES, E. B., in collaboration with BEEGLE, F. M., WHITTIER, A. C., FRITZ, C. M., COLLISON, R. C., WOODS, H. S., and KNUDSEN, C. W., in *Ohio Agricultural Experiment Station, Technical Series, Bulletin* No. 6, 80 pp. 23 fig. Wooster, Ohio, 1914.

FEEDS AND FEEDING

This comparison of the nutritive value of different phosphorus compounds was undertaken as part of a general study of the metabolism of inorganic substances in relation to the practical feeding of man and animals.

The experiments were made on pigs, with normal standard rations, composed principally of relatively simple manufactured products of vege-

table and animal origin (hominy, which consists of decorticated and germ free maize grains, blood albumen, wheat gluten, maize bran, and agar-agar) to which the phosphorus compounds have been added in the form of almost chemically pure substances. All the rations also contain sodium chloride. The writers have noted that the results cannot be extended to the same compounds when found in foods under natural conditions. Moreover it is stated that according to the literature the lecithins and phosphoproteins (not included in these experiments) have higher nutritive values than all the compounds here studied, *i. e.* phosphates, hypophosphites, nucleic acid, phytin and the glycerophosphates.

Five experiments were made. The first (April and May 1908) consisted of a metabolism experiment lasting ten days made with four pigs ; the second (November to December 1908) consisted of a feeding experiment (56 days) and analyses of the carcases (30 pigs) ; the third and fourth (November 1909 to January 1910) were of the same type as the second and were performed with 35 and 45 pigs respectively ; lastly the fifth (March to June 1913) was a carefully controlled series of experiments of metabolic equilibrium for the comparison of glycerophosphates and phosphates which was completed with a slaughter test and the thorough chemical study of the carcases of the six subjects experimented with.

The results are given in numerous comprehensive tables and are summarised and discussed in the following manner.

The results of experiment I show clearly that the phosphorus of orthophosphates, hypophosphites and the nucleic acid of beer-yeast, added in a pure state to rations poor in phosphorus but capable of maintaining the phosphorus equilibrium, can be absorbed by pigs and retained in the organism in considerable quantities for at least ten days. It has certainly not been proved that each of these compounds can be permanently retained, but that seems quite probable. In the case of the hypophosphites this would necessitate a further oxidation of the phosphorus to the form of orthophosphate.

In the conditions of experiments II, III and IV, some results suggest that, from a nutritive point of view, the glycerophosphates would be superior to the orthophosphates, nucleic acid, phytin and hypophosphites, especially in respect to the proportion of muscular tissue and fat in the increase of live weight, and the breaking strength of the bones and their ash-content per cubic centimetre ; but the facts are not sufficiently concordant to establish this conclusion firmly.

It is concluded from the results of experiment IV that the mineral constituents and the ethereal extract of the blood are notably affected by the diet, which also modifies considerably the salts composing the bones, both as to their quantity and their relative proportions.

Experiment V gave a very uniform and consistent series of observations of different kinds, proving that, anyway in the artificial conditions of this experiment, there are no essential differences in the mineral metabolism, the digestibility of the food, and the amount and composition of the growth of swine, as affected by phosphates and glycerophosphates. It seems

quite possible that the amount of exercise taken by the pigs, as determined simply by the state of feeling induced by the ingested phosphorus compounds, quite independently of the fundamental nutritive effects, may have entered into the determination of the relative development and even into the composition of the different parts.

Certain differences observed in the composition of the tissues can be attributed to variations in the liquid content of the parts, the salts varying accordingly, or to the composition of the supporting structures, or the unorganised nutritive matters.

While the hypophosphites, nucleic acid and phytin have not been submitted to so complete a study as that devoted to the comparison of the phosphates and glycerphosphates, no fact having led the writers to investigate the question, they consider that when added in their ordinary "chemically pure" form to rations poor in phosphorus such as those studied, these five compounds do not differ in their nutritive effects on the gross composition of the growth of the animals, except in so far as affected by the relative tolerance of the pigs towards these preparations and the consequent influence on the spirits and activity of the animals.

The writers think it possible to arrange the compounds in decreasing order of toleration, thus: glycerophosphates, phosphates, phytin, nucleic acid (from beer-yeast) and hypophosphites, the compounds being administered in doses containing equal amounts of phosphorus; nevertheless the order of the last two compounds is uncertain. It has not been shown that these differences in acceptability were directly related to the fundamental nutritive effects. If they have been established for the chemically pure compounds they certainly do not exist in foods containing these compounds combined naturally.

When phosphorus is added to a ration in the form of very soluble compounds a much smaller amount will be tolerated by the animal than when the phosphorus is supplied in its natural form in food.

Owing to the great difficulty of making the animals eat the nucleic acid, commercial phytin and the corresponding compound obtained from wheat-bran, it is concluded that the isolation of such compounds from the natural products alters at least their therapeutic effects. So that it is impossible to draw any conclusion on the nutritive value of these compounds present in ordinary food from experiments made with the pure extracted substances.

It has not been established that the organic compounds used in this investigation have a higher feeding value than that of inorganic compounds of phosphorus. No fundamental differences in the nutritive value of the compounds of phosphorus studied were established. No basis therefore, was discovered for a differentiation between the nutritive values of organic and inorganic compounds of phosphorus generally.

Even admitting debated superior nutritive value of organic phosphorus compounds, there is no doubt that the quantity of organic phosphorus contained in the body is a very small part of the total phosphorus, and it is certain that in the diet of all omnivorous and herbivorous animals (*i. e.* of all

domestic animals) there is a much greater ratio of organic to inorganic phosphorus, than in the bodies of these animals. Therefore each time it is necessary to increase the total quantity of phosphorus of a ration this result can be completely achieved by giving the phosphorus in the form of inorganic compounds.

It appears improbable that, for young or adult animals, any diet whatever, composed of natural foods and satisfying the nitrogen requirement, will fail to furnish enough phosphorus to maintain the equilibrium of this element. It is however certain that many rations composed of common foods do not contain the quantity of phosphorus necessary to assure the maximum assimilation of this element and the maximum development.

The results of the experiments indicate that the possibility of influencing to a practical extent, the relative development of the tissues and organs of domestic animals by adding isolated compounds of phosphorus to the ration, is probably limited to the density and strength of the bones. However, the increase of the resistance and density of the bones obtained by adding phosphorus compounds to the normal diet is accompanied by only a small possible increase in the external dimensions.

In order to increase the strength of the bones of growing animals, the most practical form in which to administer the phosphorus for this purpose is probably any preparation of bone readily eaten by the animals. Precipitated bone phosphates are readily taken by all kinds of farm stock.

The diets experimented with were deficient in phosphorus and calcium but the animals possessed quite a limited tolerance towards each of these elements in the form of their pure salts. The addition of marked quantities of calcium carbonate always produced digestive troubles ; although the deficiency in phosphorus was such that the bones were quite insufficiently nourished, it was not possible to administer more than 25 to 40 per cent of the total phosphorus in the forms it was desired to study. The attempt to increase the mineral base of the rations by the addition of potassium and sodium citrate were no more successful.

1089 – **The Influence of the Nature of the Diet on the Retention of Protein.** — UMEDA N., in *Biochemical Journal*, Vol. X, No. 2, pp. 245-253. London, June 1916.

The question of the capacity of the organism to store protein has always been one of considerable interest and although it is highly probable that such a storing is a normal process, the critical conditions for its occurrence have not yet been fully elucidated, largely owing to the fact that the amount of information available from nitrogen equilibrium studies is small and its value difficult to assess. Still by the use of the method of superimposition results of importance can be obtained without recourse to such favouring conditions of storage as muscle work, growth or inanition, all of which conditions introduce secondary factors which render the interpretation of the data more difficult.

In the course of another investigation Tsuji (1915) found that the degree of retention of superimposed protein varied (1) with the nature of the standard diet, and (2) with the nature of the protein superimposed. As these experiments were, as regards the superimposition, only of one

day's duration the present series of experiments was carried out to amplify the data obtained.

The animal employed was an Airedale bitch weighing 17.6 kilos. She was fed daily at 11 a. m. after catheterisation the urine then obtained being added to the urine collected in the receiver of the metabolic cage.

The analytical methods employed were: total nitrogen, Kjeldahl; urea, Plimmer and Skelton's modification of the urease method, ammonia, Folin. The delimitation of the faeces was carried out by means of charcoal or carmine. The total faeces was collected for each period and a single analysis of the mixed specimens was made.

As regards the standard diets employed three different combinations of protein, fat and carbohydrate were used. They all contained the same amount of protein and were of the same caloric value but varied markedly in their content of fat and carbohydrate. They were as follows.

I. *Carbohydrate-rich, fat-poor diet.*

| | | | |
|---|---|---|---|
| Scott's oatflour . . . | = 120 g. | | |
| Dried skimmed milk | = 43 g. | | |
| Margarine . . . . . | = 34 g. | Nitrogen . . . | 7.2 g. |
| Caseinogen . . . . . | = 19 g. | Carbohydrate. . | 194 g. |
| Tapioca . . . . . | 93 g. | Fat . . . . . | 34 g. |
| Sodium chloride . . | 2 g. | Caloric intake . | 1266 |

II. *Intermediate diet.*

| | | | |
|---|---|---|---|
| Scott's oatflour . . . | = 60 g. | | |
| Dried skimmed milk | = 62 g. | | |
| Margarine . . . . . | 77 g. | Nitrogen . . . | 7.2 g. |
| Caseinogen . . . . . | = 19 g. | Carbohydrate. . | 117 g. |
| Tapioca . . . . . | 47 g. | Fat . . . . . | 68 g. |
| Sodium chloride. . . | = 2 g. | Caloric intake . | 1266 |

III. *Fat-rich carbohydrate-poor diet.*

| | | | |
|---|---|---|---|
| Scott's oatflour. . . | = 30 g. | | |
| Dried skimmed milk | 40 g. | | |
| Margarine . . . . . | = 120 g. | Nitrogen. . . . | 7.2 g. |
| Caseinogen . . . . . | = 34 g. | Carbohydrate. . | 42 g. |
| | | Fat . . . . . | 101 g. |
| Sodium chloride . . | 2 g. | Caloric intake . | 1296 |

The standard diet was continued for a pre-period of five to eight days until the nitrogen output was approximately constant, there was then added to the diet a definite amount of protein material, and this was continued for eight days when the diet again reverted to the original standard for a post-period of six or eight days. It was thought that in this way some definite information as regards retention would be obtained.

A short bibliography is given and tables show the results of the five experiments, which were as follows:

*Experiment I.* Retention of caseinogen nitrogen on the carbohydrate-rich fat-poor diet.

*Experiment II.* Retention of caseinogen nitrogen on the intermediate diet.

*Experiment III.* Retention of caseinogen nitrogen on the fat-rich, carbohydrate-poor diet.

*Experiment IV.* Retention of gelatin nitrogen on the carbohydrate-rich, fat-poor diet.

*Experiment V.* Retention of gelatin nitrogen on a fat-rich, carbohydrate-poor diet.

The conclusions were as follows :

1. Nitrogen in the form of protein added to a carbohydrate diet is retained in greater amount than when added to a fat diet of equal caloric value.

2. Nitrogen given in the form of caseinogen is more completely retained than when given in the form of gelatin.

3. The addition of meat extract to gelatin does not increase the amount of nitrogen retained.

The paper does not deal with the problem as to how the carbohydrate acts, but it will possibly be treated in another paper.

1090 – **The Influence of Phosphates on the Feeding of Cattle.** — PICCININI MARIO in *La Clinica Veterinaria*, 39th year, No. 13-14, pp. 383-391. Milan, July 30, 1916.

Investigations were carried out on the influence which the different compounds of phosphorus have on the growth of young animals . As it was intended to treat the latter from their birth, a preliminary investigation was made to determine whether it is possible to influence the amount of phosphorus in the milk of the mothers by the administration of different phosphorus compounds. This preparatory work was carried out on three cows belonging to the Zootechnic Institute of the Royal Veterinary School of Naples. The phosphorus was administered in the form of bone powder (23 per cent phosphoric acid), dicalcic and tricalcic phosphate (44 per cent phosphoric acid), calcium glycerophosphate (25 per cent phosphoric acid) and a cereal decoction. During the course of the investigation the three cows always received the same diet. The milk from each stage was exactly weighed, from it a sample proportional to the quantity produced was withdrawn and this was employed for the estimation of the phosphoric acid.

The trials covered five periods, each of which can be divided into three parts. In the first, lasting eight days, the animal received the ordinary diet and this period served to render constant the phosphoric acid content of the milk produced. In the second, lasting from three to six days, the compound, of which it was desired to determine the influence, was administered. In the third, lasting eight days, the feeding reverted to the normal and the administration of phosphorus was suspended. The last period served to indicate how long the influence of the phosphatic substance administered in the preceeding period persisted.

From the amounts of phosphoric acid found in the milk before, during

and after the administration of the different phosphates to the animals it seems that certain slight modifications can be effected in the phosphoric acid content of the milk. However, the administrations have no fixed influence and do not produce a constant regular increase proportional to the quantity of phosphate administered, on the contrary they seem almost to exercise a disturbing influence. Indeed, whilst an unexpected uniformity in the phosphoric acid content of the milk produced by the animals under observation is observed before the phosphates have been administered to them, this uniformity ceases three or four days after the first administration.

Thus, in the eight days which preceded the first administration of bone powder (150 gms. the four first days and 200 gms. the two last) to cow No. 1, the phosphoric acid content of its milk varied from a minimum of 2.8 per cent to a maximum of 2.94 per cent, but on the third day after the first administration of bone powder, there was a marked depression in the phosphoric acid content (2.63 per cent) which increased the following day (3.24 per cent) and then underwent a new and considerable depression (2.02 per cent). These alternate high and low figures continue for seven or eight days from the last administration of bone powder. Almost the same observations were made with cow No. 2. Uniformity in the phosphoric acid content (3.04 per cent to 3.45 per cent) of its milk before the tricalcic phosphate had been administered, a depression (2.63 per cent) the third day after its administration (80 gms. per day for seven days) then the oscillations, which however did not extend above the preceding mean content, and finally, seven days after the last administration, a reversion to the original regular and constant figure. With cow No. 3 there was a marked increase in the phosphoric acid content of its milk on the third day after a single administration of 200 gms. of dicalcic phosphate. The content reached 3.28 per cent although previously it oscillated between 2.84 per cent and 2.95 per cent. Then there were alternate increases and decreases, and only after seven days did the phosphoric acid of the milk revert to within the limits of the original mean value.

Calcium glycerophosphate gave the same result, the experiment being made four months after that with bone powder. The third day ofter its administration to cow No 1 a depression in the phosphoric acid content of its milk was evident ; the amount decreased to 2.84 per cent, although it had previously oscillated between 2.99 per cent and 3.19 per cent ; this depression was maintained on the following days, and it was only on the fifth day after the first administration of glycerophosphate (the third from the last administration, when twice the preceding quantity — 200 gms. — was given) that there was a slight increase above the ordinary content (3.29 per cent) ; then there was a fresh depression which, always less marked, was maintained the whole time that the estimation were made.

The same results were obtained by administering to the same cow cereal decoctions containing from 0.56 to 1.1 gms. of phosphoric acid per litre. The second day after the first administration a large decrease in the phosphoric acid content of the milk (from 3.29-3.26 per cent to 2.68 per

cent) was observed ; this depression was maintained on the two following days. On the fifth day after the first administration, the second from the last dose, there was a slight increase. The ordinary constant acid content reappeared only after seven days from the last administration of the cereal decoction.

HORSES

1091 – **Stallion Service in the United States.** — WENTWORTH E. N., (Kansas Agricultural College), in *The Breeder's Gazette*, Vol. LXX, No. 5, p. 160. Chicago, August 3, 1916.

Of the twenty-two States which possess a government stallion service, nineteen have published the statistics respecting it, *i. e.*, New York, New Jersey, Pennsylvania, Michigan, Indiana, Illinois, Wisconsin, Iowa, Minnesota (1), North Dakota, South Dakota, Nebraska, Kansas, Utah, Montana, Idaho, Washington, Oregon and California. The report gives the distribution of the stallions amongst the different breeds, as shown in the following table :

| Breeds | Pure blood stallions | |
|---|---|---|
| | Number | Percentage |
| Percheron | 18 022 | 53.225 |
| Standardbred | 4 214 | 12.445 |
| Belgian | 4 091 | 12.082 |
| French, heavy | 2 116 | 6.249 |
| Shire | 2 104 | 6.214 |
| Clydesdale | 1 279 | 3.777 |
| German carriage horse | 502 | 1.483 |
| Shetland pony | 301 | 0.889 |
| Morgan | 296 | 0.874 |
| Hackney | 273 | 0.806 |
| English thoroughbred | 233 | 0.688 |
| French carriage-horse | 181 | 0.535 |
| American saddler | 120 | 0.355 |
| Suffolk | 60 | 0.177 |
| Cleveland Bay Trotters | 25 | 0.074 |
| Non Standard Trotters | 25 | 0.074 |
| Arab | 18 | 0.053 |

Obviously the heavy horses are in a large majority (81.72 per cent.), those of the light type only representing 18.28 per cent. Besides these 33 860 pure bred stallions, 23 151 grade stallions are authorised and approved for the stallion service. These represent only 38.05 per cent of the entire number of stallions employed.

1092 – **The Very Short Gestation of a Mare.** — DE CHOIN, in *Comptes rendus de l'Académie d'Agriculture de France*, Vol. 1, Year 1915, No. 25, pp. 716-717. Paris, 1916.

This note records observations on a mare, Walkyrie, which was served on March 19, 1915 and foaled on November 7, 1915, after only 233 days of pregnancy. The offspring, which was perfectly viable, weighed 128 lbs. and had a height to the withers of about 36 ins. The only appa-

(1) See *B.* Sept. 1916, No. 99.

rent incomplete part at birth was the epidermis of the feet which grew rapidly during the first few days of the foal's life. This authoritative case considerably reduces the 287 days previously recorded as the minimum period of gestation for a mare.

1093 – **Origin of the Brazilian Breed of Cattle "Caracu".** — ROMAO J. J. in *O Criador Paulista*, 11th year, No. 7, pp. 179-184, 11 fig. Sao Paulo, July, 1916.

The "Caracu" breed was founded by the great-grandfather of the writer, Joaquim Bernardes de Costa Junquiera at Rio Verde (Minas Geraes) by crossing the cattle named "Junqueiros" in the State of Minas, "Franqueiros" in the State of Sao Paulo, and "Colonia" in that of Bahia, with the cattle "Curraleiro". At that time the "Junqueiro" and the "Curraleiro" constituted two distinct types. The breed "Junqueiro" was descended from the Portuguese "Alentejana" imported from Portugal into the southern part of the State of Minas, where it developed much more than in the country of its origin. The "Curraleiro" breed is of Spanish origin, the first examples imported into Matto Grosso and to Goyaz came from Uruguay and the Argentine. The cattle "Caracu" has been inbred and selected by three generations of cattle-breeders. It has been brought to a very high degree of perfection and constitutes to-day a constant and well defined type. According to the writer it would be expedient to breed it pure instead of crossing it with the zebu, as is almost universally done in the State of Minas Gereaes, for the offspring of the cross is much less satisfactory than the pure "Caracu".

1094 – **The Ration and Age of First Calving as Factors Influencing the Growth and Dairy Qualities of Cows.** — ECKLES C. H. in *University of Missouri College of Agriculture Experiment Station, Bulletin* No. 135. Columbia, Missouri, September, 1915. CATTLE

This investigation was made to obtain data on two points (1) the influence of liberal as compared with light rations during the growing period, (2) the influence of the age at first calving. It was desired to ascertain more definitely the relation of these factors to the dairy qualities of the cow. The data obtained were also expected to have an important bearing on the relation of these factors to dairy type, rate of growth, age at maturity and date of sexual maturity.

A list of questions relating to these was sent to the most important breeders of dairy cows. Three hundred answers were received and have been tabulated. These indicate a wide range of opinion as regards such points as the relation of age at first calving to type, milking qualities and size, the effect of heavy grain feeding during the period of growth upon size, milking qualities and type.

The experiments lasted eight years and were made with forty pure-bred cows of the Jersey, Holstein and Ayrshire breeds. Complete records of the food they consumed and their development as shown by skeleton measurements and the weight, were kept from birth to maturity. The milk production was recorded for each cow during two or more periods of lactation.

The forty cows were divided into two principal groups. The first was

given a heavy ration from birth to first calving, the second a light ration. The heavy ration consisted of whole milk during the first six months, on an average 16 lbs. per head per day, and all the grain (corn two parts, oats one part) and hay the animals would consume up to the first calving. During the summer a number of these animals were kept grazing and received in addition the grain ration, others were not put on pasture but received the hay and grain all through the year. After calving all the cows had alfalfa, hay, silage and a grain mixture of four parts of corn, two of bran and one of oilmeal, administered proportionally to the milk production of the animal. The light fed group received the mother's milk during the first fortnight, this was then gradually replaced with skim milk, fed warm and sweet immediately after separation, until the end of six months. Alfalfa hay was given as soon as the animals would consume it. Grain was only given from the time when milk production commenced. In the summer a number of the animals was put on pasture, while the remainder received only hay and a little green soiling crops. After calving all the cows of the second group received the same ration as those of the first.

The factor of age at first calving was introduced by taking care that half the cows of each group calved at an early age for the breed, and the other half about a year later.

*Influence of ration upon rate of growth.* — The weight and skeleton measurements were determined every month. The effect of the heavy feeding was a more rapid development of the skeleton especially during the period when growth is most rapid. Later it produced a much greater fattening. The animals which were lightly fed grew less rapidly but for a longer time ; nevertheless they never attained a size equal to that of the first group- The difference between heavy feeding and light feeding for the young animals shows more strongly upon the weight than upon the rate of skeleton growth. One cause of the existence of small cows in commercial herds is the character of the ration during the growing period.

*Influence of the age at first calving on the size.* — This factor has a marked effect on the size of cows. Milk production imposes a heavy tax on the cow and checks the growth in a very decided way. On the other hand gestation does not sensibly hinder its development. The most important factors which tend to limit the size of cows are scanty feeding during the growing period and early breeding.

*Sexual maturity.* — The ration exercises a considerable influence on the time of sexual maturity. Animals fed heavily mature sexually when two to four months younger than animals fed lightly.

*Relation of ration to dairy qualities.* — The heifers heavily fed during growth were slightly inferior in milk production, to those fed lightly. The employment of heavy grain rations seems to have had some detrimental effect on the milking functions. But, within the limits ordinarily existing in practice, this factor probably has no appreciable influence. Some high-producing cows were found in each group, and also some medium and some inferior. The data indicate that the hereditary factors such as the influence

of the sire and the individuality of the animal are the real determining factors with reference to the milking functions of the cow. Inferior milk-producing cows are rather the fruit of heredity than of the treatment received when they were young.

*Age of calving and milk production.* — The experimental data given and a compilation of the records of the University of Missouri herd for twenty-two years show that on an average the maximum production of milk is secured from cows well matured before they commenced lactation. The maximum production among ninety-five cows was obtained from those calving between the ages of 28 and 32 months, the minimum from those calving under 20 months old.

*Relation of ration to dairy type.* — Heavy feeding of young cows tends to produce larger and rather coarser animals than does light feeding. At the time of calving the conformation of the animal bred on heavy grain ration is somewhat different from that of one bred on a ration of roughage. If both cows are given the same ration after calving, this difference soon disappears.

*Age of calving and dairy type.* — Early calving tends to produce a smaller and more refined type of cow than that which results from calving a year later.

*Relation of roughage fed to digestion.* — The opinion of breeders is that a cow bred principally on roughage has a greater capacity for the elaboration of the food when it reaches maturity. This opinion has not been confirmed by the writer's investigation. For a short time after calving there was a marked difference, but this disappeared gradually and two months later there was no difference between the two groups. It was proved that the animals of the two groups required the same quantity of nutrients to produce a pound of milk.

*Conclusion.* — It is possible to influence, to some extent, the rate of growth, the size when mature and the type of cows, by the liberality of the ration during the period of growth, and by the age at first calving. Even within limits of variation much wider than normal, the character of the ration, with reference to the amount of nutriment that it yields, has no appreciable effect on the milking functions of the cow when it has reached maturity.

The age at first calving is a factor of some importance with respect to the development of the milking functions of the cow. Calving at a very early age prejudices the best development of the milking function and nothing is gained by retarding it too much.

1095 – **The Cost of Food in the Production of Milk.** — CROWTHER Ch. and RUSTON A. G. in the *University of Leeds and Yorkshire Council for Agricultural Education Bulletin* No. 98, pp. 1-27. Leeds., 1915.

During the four years from April 1911 to March 1915, a continuous series of investigations on the cost of feeding cows, and the yield and quality of the milk produced by them has been carried out on a number of farms in the North Riding of Yorkshire.

The present report deals with the data obtained during the twelve

months from April 1, 1914 to March 31, 1915. As in previous years each herd has been visited fortnightly by the Recorder for the purpose of weighing, sampling and testing the morning and evening milk of each individual cow. At each visit he has ascertained also the amount and nature of the food consumed by the cows and has obtained from the farmer particulars as to the breed, age etc. of each cow. During the year 291 cows were tested, but for only 144 of these have complete records for the twelve months been obtained. The climatic conditions have a considerable influence both on the grazing and on the hay crop; and therefore also on the cost of the food consumed; accordingly the meteorological data for the five summer months are given. The great variations of temperature in May, and the unusually severe night frosts checked the growth of grass to such an extent that the pastures were bare until late in the sumer and the hay crop distinctly light.

The report deals first with yield of milk then with the nature and amount of feeding (including cost) and finally with the percentage of fat in the milk.

The data for 1914-1915 are compared with those of the preceding years, the cows being divided into eight classes according to their yield as follows:

TABLE I.

| | Number of cows giving milk yield (gallons) for 12 months | | | | | | | |
|---|---|---|---|---|---|---|---|---|
| | 400 or less | 401–500 | 501–600 | 601–700 | 701–800 | 801–900 | 901–1000 | Over 1000 |
| 1914–1915 | 13 | 19 | 19 | 30 | 24 | 19 | 11 | 9 |
| 1913–1914 | 11 | 17 | 22 | 35 | 28 | 14 | 5 | 9 |
| 1912–1913 | 7 | 14 | 22 | 25 | 19 | 11 | 7 | 4 |
| 1911–1912 | 9 | 8 | 20 | 15 | 15 | 10 | 11 | 7 |
| Total 4 Years | 40 | 58 | 83 | 105 | 86 | 54 | 34 | 28 |

Great differences are again noticeable between the average yields of the various herds and still more between the records of the individual cow within each herd. The maximum average yield per head was 935 gallons, the minimum 472 gallons.

The average weights of food consumed and the duration of the pasturage per head in 1914-1915 and 1913-14 were as follows:

Although the mean consumption per annum was almost the same in the two years, close examination of the figures given in the original shows that the system of feeding has differed greatly as between the various herds. In view of these differences the amount of digestible proteins, and the starch equivalent of the food actually fed per day were compared with the

TABLE II.

| | Grass | Hay | | | Straw | | Roots | | | Cake and meal | |
|---|---|---|---|---|---|---|---|---|---|---|---|
| | weeks | tons. | cwt. | st. | cwt. | st. | tons. | cwt. | st. | cwt. | st. |
| Average 1914–15. . . . . | 27 | | 19 | 3 | 12 | 6 | 4 | 9 | 3 | 17 | 5 |
| » 1913–14. . . . . | 28 | 1 | 5 | 2 | 12 | 4 | 4 | 0 | 2 | 17 | 7 |

protein and starch required according to standard for the production of the milk obtained. The average amount of digestible protein fed was 1.98 lbs. per day, that required 2.04 lbs. ; the average starch equivalent of the food fed was 12.83 lbs., that required 11.64 lbs.

As in previous years the home grown foods were valued according to the following arbitrary scale.

| | | | |
|---|---|---|---|
| Hay | £ 15*s* per ton. | Swedes | 10*s* 0*d* per ton. |
| Oat Straw | £1 10*s* " | Mangels | 10*s* 6*d* " |
| Barley Straw | £1 5*s* " | Turnips | 8*s* 0*d* " |
| Grass | 3*s* 6*d* per week for spring calvers. | | |

These prices are probably on the whole, rather higher than the bare cost of production and represent what may be termed the feeding or consuming value. The purchased foods were taken at full cost without any deduction for the value of the manurial residues arising from the consumption.

The estimated average cost of feeding per cow per annum was as follows.

TABLE III.

| | Estimated cost per cow per annum | | | | | |
|---|---|---|---|---|---|---|
| | Grass | Hay | Straw | Roots | Cake etc. | Total |
| Average. . . . . | £4 15*s* 5*d* | £2 11*s* 4*d* | 17*s* 10*d* | £2 3*s* 11*d* | £5 6*s* 9*d* | £15 15*s* 3*d* |
| Per cent . . . . . | 30 | 16,5 | 5,5 | 14 | 34 | 100 |

There were considerable variations from the mean, the maximum cost of food per head being £ 20 10*s* and the minimum £ 13. The hay and grass represent on the average one-half, the arable crops one-fifth and the purchased foods one-third of the total cost, results in close agreement with those found in previous years.

Of the total number of cows 42 did not yield milk equivalent in value to the estimated cost of feeding when the milk was valued at 6*d* per gallon, 24 per cent when the value was 7*d* per gallon, 15 per cent when 8*d* per gallon, 10 per cent when 9*d* per gallon and 7 per cent when 10*d* per gallon.

Assuming that 100 gallons of whole milk give roughly 90 gallons of skim milk and valuing the latter at 2*d* per gallon, then deducting the value

of the skim milk from the full food bill of each animal, values were obtained for the cost of food per pound of butter fat produced. These values varied from a minimum of 5.5*d* to a maximum of 14.9*d* per pound with a mean of 9.4*d*.

The variations of the percentage of fat deserve special mention. The following table gives a summary of the data for 260 days.

TABLE IV.

| Number of samples of which the percentage of fat lies between | Morning milk | Evening milk | Average |
|---|---|---|---|
| 2,6 to 2,79 | 5 | 0 | 0 |
| 2,8 to 2,99 | 9 | 0 | 0 |
| 3,0 to 3,19 | 47 | 1 | 1 |
| 3,2 to 3,39 | 56 | 2 | 9 |
| 3,4 to 3,59 | 47 | 14 | 42 |
| 3,6 to 3,79 | 36 | 13 | 77 |
| 3,8 to 3,99 | 22 | 28 | 60 |
| 4,0 to 4,19 | 9 | 48 | 43 |
| 4,2 to 4,39 | 9 | 49 | 9 |
| 4,4 to 4,59 | 5 | 40 | 4 |
| 4,6 to 4,79 | 3 | 27 | 4 |
| 4,8 to 4,99 | 4 | 21 | 2 |
| 5,0 and above | 8 | 17 | 9 |

The considerable difference between the percentage of fat in the morning milk and the evening milk is due to the difference in the time elapsed since the preceding milking. The greater the difference between the day and night intervals, the greater is the difference in the mean fat content of the milk at the two milkings.

1096 – **Feeding Trials of Dairy Cows in Denmark.** — LUND, A. V. in 80th *Compte rendu du Laboratoire d'essais de Copenhague* (communicated to the International Institute of Agriculture by its Danish Correspondent, Baron ROSENKRANTZ).

A. *Trials with Mangels and Turnips.* — The trials were intended to compare the feeding value of mangels and turnips, and also the amount of dry matter of the kinds moderately rich in this constituent, *e. g.* mangels, Barres' Ovoid and Eckendorf; turnips, Bangholm and Superlative. The results of three groups (I, II, III) of experiments are given.

I. *Comparison of Mangels and Turnips Having the Same Content of Dry Matter.* — In each experimental farm two groups of uniform cows submitted to the same feeding during the preliminary period, were

chosen. During the trial period one of the groups received a certain amount of dry matter from mangels, the other a corresponding quantity from turnips; in the post period the two groups were fed in the same manner. In the trial period 79.8 lbs. of mangels (9.3 lbs. of dry matter) were on an average replaced by 84 lbs. of turnips (9.26 lbs. of dry matter). The group fed on mangels produced, during the trial period, a little more milk than that fed on turnips, whilst in the periods before and after the trial, when the two groups received the same diet, the milk production was the same. The mean increase of milk yield for ten cows was 7.27 lbs. per day, or about 2.5 per cent. On the other hand, the percentage of fat in the milk, which in the preparatory period was equal in the two groups, diminished slightly during the trial period in the milk from the group fed on mangels, but increased again in the post period. This was only a matter of some hundredths of one per cent, so it is not easy to determine what significance should be attached to the difference. The change of diet had no influence on the composition of the milk or on the general condition of the different groups.

II. *Comparison of Roots (mangels and turnips) Having a Comparatively High Content of Dry Matter.* — The trials were made as described above. The different roots contained the following amounts of dry matter:

| Mangels | Mean content per cent | Maximum content per cent | Minimum content per cent |
|---|---|---|---|
| . . . . . | 13. 4 | 14.39 | 11.43 |
| Barres' Ovoid . . . . . | 12.40 | 13.67 | 9.42 |
| Eckendorf . . . . . | 9.97 | 10.97 | 8.12 |
| *Turnips:* | | | |
| Bangholm . . . . . | 11.52 | 12.27 | 10.56 |
| Superlative . . . . . | 9.57 | 9.80 | 9.16 |

The animals were given on an average 8.5 lbs. of dry matter per head per day, for this purpose 70.3 lbs of the roots having a high content of dry matter, and 74.6 lbs of the roots having a low content, were required. The nett result showed that the difference in feeding affected neither the quantity of milk, nor its composition, nor the general condition of the animal. In other words, a difference in the content of dry matter produced no difference in the forage value of the roots.

III. *Influence of the Roots on the Quality of the Butter* — An experiment made in a farm with two very comparable groups of cows containing sixteen in each. During a sufficient preparatory period both groups received the same ration (half mangel, half turnip). The milk from each group during several consecutive days was dispatched to a dairy where the cream was skimmed, acidified and transformed into butter under identical conditions for the two groups. Then in the trial, the feeding was modified so that the first group received 99.2 lbs. of turnips per cow, the second group 88.2 lbs. of mangels (giving an equal amount of dry matter). At the end

of ten days a second preparation of butter similar to the first was made, and a third eighteen days later.

During the period after the trial, the two groups received the same quantity of mangels, 88.2 lbs per head per day. Ten days later a fresh preparation of butter was made In each case the butter was conveyed to the laboratory to be examined and judged. The butter of the two groups was found to be of the same quality, but that from the feeding with turnips had a higher iodine number and olein content than had that from the feeding with mangels. Further the former butter contained one per cent more water, and the butter milk 0.18 per cent more fat. However the treatment of the cream and butter explains these differences.

B *Trials withc Cocoa Cake.* — This by-product from the manufacture of cocoa, although only recently used in Denmark for the feeding of dairy cows, has quickly acquired the reputation of increasing the percentage of fat in milk.

The experiments lasted more than three years and were made on two groups of very comparable cows, one group being permanently fed on cocoa cake.

In the first year when the earth nut and soja cake (1.75 lbs. added to the ration) fed to the first group, was replaced by 2.42 lbs. of cocoa cake, the quantity of milk diminished, but the percentage of butter-fat did not increase so as to equal that of the second (permanently cocoa fed) group. In the second year an attempt was made to ascertain the influence of the addition of 1.54 lbs. of cocoa cake, particularly as to whether the milk yield was maintained and at the same time the percentage or butter increased. But the cocoa fed group in spite of the addition of cake to its ration, gave less milk than did the other group, although this contained a little more butterfat (0.15 per cent) so that the cows of the two groups produced almost the same absolute amount of butter-fat. Just as in the preceding trial, the milk from the cocoa fed group proved to be richer in protein but poorer in sugar and ash. A similar trial made in the third year gave concordant results. Thus the principal result is an increase in the percentage of butter-fat in the milk but simultaneously a decrease in the yield of milk, so that the absolute quantity of butter-fat does not increase, even as a result of the supplementary addition of cocoa cake. Since the latter moreover modifies the composition of the milk it mus be considered rather as a poison than a food, and not given to dairy cows. These results are corroborated by the data below.

C. *Poisoning by Thebromine Due to Cocoa Cake.* – Professor G. H. HANSEN deals with the chemical composition of this cake and describes it as containing an amount of theobromine approximately equivalent chemically and pharmacologically to the caffeine contained in coffee an tea. Cocoa beans are richer in theobromine (1 to 2 per cent) than are the shells (0.5 to 0.8 per cent) which form the greater part of the food. However the shells may also contain much theobromine as is indicated by the following data.

Professor HANSEN publishes the evidence of several veterinary sur-

geons who have made reports on the subject of poisoning by cocoa cake, which contained about 1.5 per cent of theobromine. Cases of poisoning were recorded both with cattle, where the effect initially took the form of an eczema, and with pigs and fowls where death resulted in several cases. Professor HANSEN made several laboratory experiments both with the cake and with theobromine, on fowls, rabbits and mice to determine their action on the organism. These led to the conclusion, that owing to its poisonous character, cocoa cake cannot be considered as a food.

1097 – **Comparative Experiments on the Feeding of Cows with Cotton cake and Palm kernel Cake.** — *Farmer and Stockbreeder and Chamber of Agriculture Journal*. Vol. XXIX New Series, No. 1403, pp. 1323-1324. London, August 14, 1916.

The Governors of the Cumberland and Westmoreland Farm School at Newton Rigg near Penrith, in their annual report, give the following particulars of experiments on the feeding of cows on cotton cake and palm kernel cake.

The dissimilarity in the composition of Egyptian undecorticated cotton cake and palm kernel cake makes it impossible to devise two rations of similar nuritive value with the same weight of each cake in the respective rations. The following were the daily rations.

| Ration I | | Ration II | |
|---|---|---|---|
| 35 | lbs swedes. | 35 | lbs swedes. |
| 8 | lbs hay. | 8 | lbs hay. |
| 14 | lbs oat straw. | 14 | lbs oat straw. |
| 2 3/4 | lbs decorticated cotton cake | 2 3/4 | lbs decorticated cotton cake. |
| 4 | lbs Egyptian undecorticated cotton cake | 5 | lbs of palmnut kernel cake. |
| 2 | lbs crushed oats | | |

The two rations contain almost the same quantity of digestible matter, the albuminoid ratios being 1 :7 in the first and 1 : 7.5 in the second. Owing to the difference in the cost of the cakes at the time, ration No. 1 cost 13 *d* per week more than ration No. 2.

The experiments were made on eight cows divided into two lots, which received the respective rations I and II for three weeks. The rations were then reversed and at the end of three weeks were again reversed and again at the end of another three weeks, the trial thus lasting twelve weeks. The cows were weighed at the commencement and at the end of each period of three weeks. The milk of each cows was weighed morning and evening and the fat of the mixed morning and evening milk of each lot estimated twice under each diet.

The following is a summary of the results :

| | Ration I Cotton cake | Ration II Palm nut cake |
|---|---|---|
| Total quantity of milk produced . . . . . | 7749 lbs. | 8157 lbs. |
| Gain of cows in live weight . . . . . | 392 lbs. | 394 lbs. |
| Percentage of fat in the milk . . . . . | 3.55 | 3.60 |

Thus the Egyptian cotton cake while costing more than the palmnut kernel cake produced less milk without increasing the gain in live weight of the cows or the percentage of fat in the milk. It should be stated that the cows do not take readily to palmnut kernel cake unless it is damp with treacle solution or dusted with locust bean meal.

1098 – **Studies on the Hygienic Production of Milk: Importance and Control of the Microflora of the Udder in the Selection of Dairy Cows.** — GORINI, COSTANTINO, in *Reale Instituto Lombardo di Scienze e Lettere*, Rendiconti, Vol. XLIX, part. 14, pp. 480-489 Milan, June 22. 1916.

The writer's previous investigations carried out since 1901 have established the following facts : 1) the microflora of the udder is characteristic and composed of acid-forming bacteria ; 2) with these bacteria the coccus forms predominate, particularly the micrococcus (*Bacillus minimus mammae*) but bacillus forms are also met with ; 3) the microflora assists both the digestion of the milk and the ripening of the cheese, by its peptonising action on the casein ; 4) in some cases the microflora of the udder contains the common lactic organisms, principally of the streptococcus type ; 5) sometimes, although originating in a healthy udder, it exercises a harmful action on the milk.

Subsequent investigations made in the Bacteriological Laboratory of the Agricultural High School of Milan, confirm the above results and lead also to the following conclusions.

1) The importance of the microflora of the udder increases as milking approaches the ideal condition of asepsis, *i. e.* the absence of external microbial contamination.

2) The micro-organisms of the udder are most often found grouped in albuminous clots, which not only makes their enumeration difficult, but also gives them a marked power to resist heat, although they are not sporulating.

3) The microflora of the udder is not affected by the hygienic condition of the cow-sheds, and for this reason bacterial counts of milk may not give a true indication of the cleanliness of the milking process.

4) The microflora of the udder seems to be connected with external and internal factors which still require to be investigated. With certain cows the quantitative and qualitative examination yield such persistently high results, that the condition may almost be described as abnormal though not pathological.

The writer proposes that in the selection of heifers for the production of milk, not only their state of health but also the microflora of their udders should be taken into account. Such selection is particularly necessary in the case of the so-called " sanitary milks ", milked by aseptic methods and intended, both in the raw and pasteurised or sterilised condition, for the feeding of infants and invalids.

The method of examining the microflora is described by the writer. Ordinary methods of culture on artificial media cannot be employed, but the fermentation test or lactozymoscopic test is used ; the latter must be

carefully standardised and should be applied to the milk obtained aseptically from each cow and from each quarter.

A bibliography of twenty-three publications is appended.

1099 – **The East Anglian Milk Recording Society** (1). — CHEVALIER, J. B. and OLDERSHAW, A. W. in *Journal of the Board of Agriculture*, Vol. XXIII, No. 5, pp. 431 to 436. London, August, 1916.

The East Anglian Milk Recording Society was established in June 1914. The annual subscription was fixed at 2*s* 6*d* per member in addition to a levy of 2*s* per cow per annum — the minimum levy being fixed at £ 1 per member. The members of the Society were scattered over a very wide area, within a radius of about thirty miles of Ipswich. The milk recorder paid a surprise visit to each herd at least once in every six weeks. He received a salary of £ 100 per annum and paid his own travelling expenses. Samples of the mixed milk of the herds were taken on each evening and morning of the recorder's visit: these samples were tested gratuitously but a fee of 3*d* per sample was charged for any addition samples tested. The Society comprises 21 members with 25 herds, divided into two classes, herds containing cows of a mixed type, and herds of pure bred cattle. At the first series of visits of the recorder 695 cows were tested.

One of the most useful functions of the Society consists of carefully weighing the food fed to the cows of various members. The results of investigations as to rations have been communicated to the local press from time to time, and it is hoped that in this manner, the Society in addition to helping members to select their cows and feed them cheaply, will also be of some use to all owners of milking herds in the neighbourhood.

The following table gives the principal returns collected by the recorder for the year June 28, 1914 to June 27, 1915.

| | | Number of cows |
|---|---|---|
| *Total number* | | 566 |
| *Breeds*: | Shorthorn | 32 |
| | Red Poll | 99 |
| | Jersey | 35 |
| | British Holstein | 66 |
| | Crossbred | 31 |
| | Undescribed | 303 |
| *Age*: | One calf of three years old | 61 |
| | Four calves of six years old | 132 |
| | Aged animals | 62 |
| | Undescribed | 311 |

(1) See *B.* March 1916, Nos. 322 and 337. (*Ed.*)

| | Number of cows |
|---|---|
| *Cows giving per annum* | |
| 10 000 lbs of milk | 13 |
| 8 000 " " " | 56 |
| 6 000 " " " | 155 |
| 4 000 " " " | 191 |
| Under 4000 lbs of milk | 97 |
| Incomplete | 54 |
| *Butter fat average* | |
| Evening milk | 4.2 per cent |
| Morning milk | 3.6 per cent |

A milk recording Society may be of value to dairy farmers :

1) By enabling them to eliminate unprofitable cows from their herds.

2) By providing a government certificate of milk yield, and in this way enabling purchasers of cows (or young stock from the herd) to place absolute confidence in the accuracy of the records given.

3) By enabling the farmer to have samples of his milk taken and tested at frequent intervals, so that he may know when it is in danger of falling below the standard.

4) The account kept of the rations fed allows of a comparison between them and their cost in different herds and so enables farmers to judge for themselves as to the cheapest feeding for milk production in the case of their own stock.

1100 – **The Dairy Side of the Ayrshire.** — WINSLOW, C. M., in *The Field*, Vol. XXVI, No. 7, p. 588. New York, July 1916.

The ever-increasing interest in blooded dairy stock is very largely due to Advanced Registry Testing done by the four leading breeds. It has brought the good cows to the front, eradicated the scrub cow when practised, and has led to the investment of large sums of money in the dairy industry.

Testing has given to the public a knowledge of the real value of high-class dairy cows, and has revolutionised the whole dairy industry of the United States. The Ayrshire breed has perhaps benefited more than all the others. The long-held belief that the Ayrshire is a wonderful dairy cow has been converted from a supposition to an absolute fact. The perfection of its conformation has never been questioned, but testing has shown that this conformation is correlated with high production, that the breed can produce a record better than 25 000 pounds of milk and 1 000 lbs of butter.

Official milk records of four cows a full year taken in connection with carefully kept feeding records made by the owners, are given in the following tables. The method of feeding employed by the breeders not only reveals the benefit gained by the cows, but also affords a valuable object lesson to others having cows on test.

## Two-Year-Old Record.

### CASTLEMAINS NANCY 4TH, 28 520.

Bred and owned by Percival Roberts, Jr. Penshurst Farm, Narberth, Pa. Born October 10, 1910. Weight 1015 lbs.

| 1913 | Milk lbs. | Fat lbs. | Total lbs. butter for the year. | Average per cent fat for the year |
|---|---|---|---|---|
| August | 1 327.3 | 46.32 | | |
| September | 1 205.9 | 37.97 | | |
| October | 1 276 | 45.55 | | |
| November | 1 897,4 | 40.47 | | |
| December | 1 149.7 | 42.77 | | |
| **1914** | | | | |
| January | 1 134.5 | 40.62 | | |
| February | 1 107,6 | 41.42 | | |
| March | 1 232.7 | 51.65 | | |
| April | 1 206.4 | 48.62 | | |
| May | 1 236.9 | 49.72 | | |
| June | 1 193.8 | 50.62 | | |
| July | 1 226.6 | 51.30 | | |
| 365 days | 14 494.08 | 547.03 | 644 | 3,78 % |

6 812 ½ quarts milk, at 6c. per quart, . . . . . $498.75.

### *Food consumed, with cost of same.*

| Lbs. | | Cost. $ |
|---|---|---|
| 880 | Bran, at $26.00 per ton | 11.54 |
| 1 130 | Schumacher Stock Feed, at $28.10 per ton | 15.87 |
| 751 | Corn Meal, at $28.10 per ton | 10.70 |
| 901½ | Oil Meal, at $31.50 per ton | 14.20 |
| 413 | Cotton Seed Meal, at $31.00 per ton | 6.40 |
| 760 | Beet Pulp, at $26.00 per ton | 9.88 |
| 8 500 | Silage, at $3.00 per ton | 12.75 |
| 1 819 | Hay, at $15,00 per ton | 13.64 |
| 9 236 | Beets, at $6.00 per ton | 7.71 |
| | Green Forage Crops | 8.32 |
| | | $131.01 |

Profit for the year, $277.74

## Three-Year-Old Record.

### Mc Alister's Betty, 23548.

Bred and owned by Percival Roberts, Jr., Penshurst Farm, Narberth, Pa.

| 1910-1911 | Milk lbs. | Fat per cent. | Fat lbs. | Butter lbs. |
|---|---|---|---|---|
| April | 373.1 | 5.4 % | 20.15 | 23.51 |
| May | 1 463.1 | 4,377 | 64.04 | 74.71 |
| June | 1 493.1 | 3,86 | 57.63 | 67.23 |
| July | 1 454 | 3,657 | 53.17 | 62.04 |
| August | 1 551.1 | 3,61 | 48.77 | 56.90 |
| September | 1 104.5 | 3,8 | 41.07 | 48.96 |
| October | 1 048.2 | 4,407 | 46.19 | 53.89 |
| November | 999.6 | 4,16 | 41.58 | 48.51 |
| December | 1 123.6 | 4,33 | 48.65 | 56.76 |
| January | 1 121.5 | 4,11 | 46.09 | 53.77 |
| February | 985.7 | 3,97 | 39.13 | 45.65 |
| March | 1 067 | 4,38 | 46.73 | 54.52 |
| April | 623.5 | 4,38 | 27.31 | 31.85 |
| Totals | 14 298.0 | 4,19 % (Mean) | 581.41 | 678.31 |

6 601 quart of milk, at 5 cents per quart . . . . . $330.20

*Food consumed with cost of same.*

| Lbs. | | Cost. £ |
|---|---|---|
| 943.5 | Bran, at $25 per ton | 11.7937 |
| 875 | Ground Oats, at $38 per ton | 16.625 |
| 276.5 | Corn Meal, at $28 per ton | 3.8701 |
| 906.5 | Gluten Feed, at $32 per ton | 14.504 |
| 224.5 | Cotton Seed Meal, at $32 per ton | 3.592 |
| 33 5 | Oil Meal, at $36 per ton | 0.603 |
| 1 300 | Alfalfa Hay, at $22 per ton | 14.30 |
| 2 000 | Mixed Hay, at $18 per ton | 18.00 |
| 5 000 | Ensilage, at $3 per ton | 15.00 |
| 5 000 | Mangels, at $8 | 40.00 |
| | Six Month's Pasture, at $3 per month | 18.00 |
| | | $138.28 |

Profit for the year $198.12.

## Four-Year-Old Record.

### August Lassie, 29581

Bred by L. A. Reymann. Owned by L. A. Reymann Estate, Wheeling, W. Va.

| | Milk lbs. | Fat per cent. | Fat lbs. | Butter lbs. |
|---|---|---|---|---|
| March, 18 days | 816.6 | 3,69 % | 30.13 | 35.45 |
| April | 1 898.3 | 3,69 | 70,05 | 82.41 |
| May | 2 146.7 | 3,85 | 82,65 | 97.23 |
| June | 1 898.4 | 3,87 | 73.47 | 86.43 |
| July | 1 716.3 | 4,14 | 71.05 | 83.59 |
| August | 1 544.5 | 4,12 | 63.63 | 74.86 |
| September | 1 392.9 | 4,38 | 61.01 | 71,78 |
| October | 1 371.1 | 4,12 | 56.49 | 66.46 |
| November | 1 235.9 | 4,28 | 52 94 | 62.28 |
| December | 1 261.4 | 4,06 | 51.21 | 60.25 |
| January | 1 164.1 | 4,23 | 49.24 | 57.94 |
| February | 984.7 | 4,35 | 42.84 | 50.39 |
| March, 12 days | 352.5 | 4,35 | 15.33 | 18.04 |
| Totals 365 days | 17 784.4 | 4,05 % (Mean) | 726.03 | 847.11 |

8 272 quarts of milk, at 7 1/2 cents per quart . . . . . $ 620.40

*Food consumed with cost of same.*

| Lbs. | | Cost. $ |
|---|---|---|
| 1 095 | Bran, at $24 per ton | 13.14 |
| 1 460 | Ground Oats, at $25 per ton | 18.25 |
| 730 | Oil Meal, at $40 per ton | 14.60 |
| 1 460 | Dis. Dr. Gr., at $33 per ton | 24.09 |
| 1 095 | Purina, at $30 per ton | 16.42 |
| 840 | Corn, at $30 per ton | 12 60 |
| 2 920 | Beet Pulp, at $24 per ton | 35.04 |
| 9 125 | Silage, at $4 per ton | 18.25 |
| 2 555 | Alfalfa, at $20 per ton | 25.55 |
| 1 095 | Clover, at $15 per ton | 8.21 |
| | | $186.15 |

Profit for the year $434.25.

## Mature Record.

### Garclaugh May Mischieff 27944.

Imported and owned by Percival Roberts, Jr,. Penshurst Farm, Narberth, Pa.

| | Milk lbs. | Fat per cent. | Fat lbs. | Butter lbs. |
|---|---|---|---|---|
| December, 5 days . . . . | 242.9 | 3,2 % | 7.77 | 9,14 |
| January . . . . . | 2 067.5 | 3,2 | 66.16 | 77.84 |
| February . . . . . | 2 348.7 | 3,05 | 71.63 | 84.27 |
| March . . . . . | 2 646.8 | 2,94 | 77.82 | 91.55 |
| April . . . . . | 2 431.7 | 3,81 | 92.65 | 109 |
| May . . . . . | 2 636.3 | 3,23 | 85.15 | 100.18 |
| June . . . . . | 2 492.7 | 3,47 | 86.5 | 101.76 |
| July . . . . . | 2 445.9 | 3,77 | 92.21 | 108.48 |
| August . . . . . | 2 004.3 | 3,79 | 75.96 | 89.36 |
| September . . . . . | 1 562.6 | 4,07 | 63.6 | 74.82 |
| October . . . . . | 1 610.3 | 3,93 | 63.28 | 74.45 |
| November . . . . . | 1 532.9 | 4,03 | 61.84 | 72.75 |
| December, 26 days . . . | 1 306.1 | 3,85 | 50.34 | 59.22 |
| Totals, 356 days. . . | 25 328.7 | 3,53 % (Mean) | 894.91 | 1 052.83 |

*Food consumed, and cost of same.*

| Lbs. | | Cost. |
|---|---|---|
| | | $ |
| 961 | Bran, at $24 per ton. . . . . | 11.53 |
| 1 013 | Schumacher Stock Feed, at $30.80 per ton . . . . . | 15 60 |
| 767 | Hominy, at $29.20 per ton . . . . . | 11.20 |
| 837 | Linseed Oil Meal, at $37 40 per ton . . . . . | 15.65 |
| 1 066 | Cotton Seed Meal, at $29 per ton . . . . . | 15,46 |
| 149 | Gluten, at $25.40 per ton. . . . . | 1.89 |
| 153 | Ajax, at $33.80 per ton . . . . . | 2.59 |
| 668 | Beet Pulp, at $26 per ton . . . . . | 8.69 |
| 11 200 | Corn Silage, at $3 per ton . . . . . | 16.87 |
| 22 233 | Beets, at $4 per ton . . . . . | 44.47 |
| 1 874 | Alfalfa Hay, at $24 per ton . . . . . | 22.49 |
| 966 | Mixed Hay, at $15 per ton . . . . . | 6.80 |
| | Green Feed . . . . . | 4.23 |
| | | $177.46 |
| 11 780 | quarts of milk at 6 cents per quart . . . . . | 706.80 |
| | Profit for the year . . . . . | $529.34 |

1101 – **Sheep-raising in La Mancha, Spain : Systems of Stock-breeding Combined With Cultivation.** — SOROA, J. U., in *La Industria Pecuaria*, 17th year, No. 526, pp. 717-719. Madrid, August 20, 1916.

In La Mancha, the farms usually combine the cultivation of 170 to 250 acres of arable land with a head of stock consisting of 200 to 300 sheep for wool, about 30 pigs and 6 to 8 or 10 mules.

*Rotation of Crops.* — Until a few years ago little but extensive cultivation was practised. The land was divided into three parts according to the system named " al tercio ", one remained fallow and on the other two cereals were grown. Now, owing to the work of the Agricultural Advisers, cultivation has become more and more intensive. The systems of rotation commonly employed are as follows.

A. — Vetches turned in, barley, beans, wheat. This rotation has been adopted in the Daimiel, on fresh lands in fairly good condition.

B. — Green fallow, cereal, a leguminous crop, cereal. This rotation is becoming general, and excellent results are expected from it, provided that the manure applied is well rotted. The following rotation is also sometimes practised: green peas (always in the spring), barley, lentils or vetches, wheat or oats.

C. — Rotation for irrigated land :, pearl millet (" panizo negro ", *i. e. Pennisetum typhoideum*), potatoes, beans, wheat. Practised in the municipalities of Manzanares., Daimiel and Villarrubia.

D. — The " al tercio " system, mentioned above, is the one most often employed.

*Pastures.* — Once every seven years barley or oats are generally sown in low forest to provide grazing for sheep. Breeding mules and sheep are also grazed on the lowland and plain pastures in the spring and autumn (Municipalities of Alcazar, Valle de Alcudia and those of the province of Toledo which belong to La Mancha) ; but in the Municipality of Malagón these pastures are intermixed with orchards of pear trees, plum trees and apricots, whilst in the province of Cuenca they are planted with alders, ash trees and sometimes willows.

*Manures.* — Both dung and fertilisers are used, the latter in large quantities for cereals. Dung is not abundant, on account of the limited number of animals, and moreover it is of bad quality because there are no well-built manure sheds. Sheep are folded on the land.

The artificial fertilisers consist of superphosphates and various mixtures whose composition is not stated. The price of dung is very high, £3 5s per ton without the cost of transport. The manurial value of folding is estimated at 5*d* for 100 sheep passing one night on the land, which provide sufficient manure for 175 to 240 square yards.

*Utilisation of the Products of the Trees.* — At the present time scarcely any use is made of the acacias and the few mulberry trees that exist; they afford little else but their shade. As the climate is not adapted for rearing silkworms, the mulberry leaves cannot be employed for this purpose and there are not enough of them for export. On the other hand the State Nurseries each year export an incresing number of acacias.

*Disadvantages Observed.* — 1) In breeding no scientific rule or definite method is followed, consequently a poor class of animal is the rule.

2) Fodder is scarce and in some seasons absolutely wanting.

3) The excessive travelling of the animals reduces their weight and production of milk.

In the region of La Mancha, sheep are bred under the two following system :

*Case* 1. — During the winter the ewes which have just lambed are given extra food, and when the lambs are weaned these are also fed until the time when the pastures are ready. For this purpose each ration costs more than 1.4*d* per day. The following account is given.

*Receipts.*

| | | s | d |
|---|---|---|---|
| Production of milk for 2 ½ months after weaning | | | |
| the lamb: 4.84 gallons at 13.1*d* per gallon | | 5 | 3.3 |
| 5.5 lbs. of wool at 6.3*d* per lb. | | 2 | 10.8 |
| 11.8 cwt. manure at 4.9*d* per cwt. | | 4 | 9.8 |
| Value of the lamb | | 11 | 2.4 |
| Total | £1 | 4 | 2.3 |

*Expenses.*

| | | s | d |
|---|---|---|---|
| 90 days feeding the ewe, valuing the ration | | | |
| at only 1.4*d* (the most favourable case). | | 10 | 9.6 |
| 20 rations for the lamb at 0.8*d* per head per day | | | 9.6 |
| Cost of keep during remainder of the year | | 6 | 7.2 |
| Attendance at 0.11*d* per day. | | 3 | 6.05 |
| Interest and depreciation at 0.019*d* per day, mortality risk at 4 per cent and cost of veterinary surgeon. | | 2 | 4.8 |
| Total | £1 | 4 | 1.25 |

Thus the conclusion is drawn that the annual profit does not exceed 1.05 *d* per head.

*Case* 2 — Rearing being impossible, the lanbs are sold directly ; they are bought by middlemen at a low price, and it must be acknowledged that the loss on the side of the lambs is balanced by the gain in the production of milk, so that the nett result is the same as in the preceding case.

*Conclusion.* — From the above it is concluded that the best method of sheep-raising is to select the breed of La Mancha and cross it so as to obtain animals which can be weaned promptly and employed in the production of cheese. The latter substance keeps for a longer time than does milk or mutton, and the profit is not lowered by the demands of middlemen. Then cheap fodder must be found for the winter ; the rations should not cost more than 0.7*d* per head per day. Where this is not possible, improved breeds of great hardiness must be obtained for crossing with the breed of La Mancha, so as to resist the adverse conditions in times of a shortage of food.

1102 – **The Poland-China Breed of American Pigs.** — STANDARD POLAND-CHINA RECORD ASSOCIATION in *Freeman's Farmer*, Vol. LXX, No. 3, p. 15. North Yakima, Washington, March 1916.

The Poland-China breed originated in the Miami Valley, Butler County Ohio, at the beginning of the nineteenth century. Up to 1816 the Miami Valley contained two breeds of swine, the Russian or Russia and the Byfield. In 1815, the Society of Shakers introduced a boar and three brood sows known by the name of " Big China ", which were crossed with the Russians and the Byfields. The production of a breed called the " Warren County " pig, was the result. The name " Poland-China " was given to this breed at about 1860, although it had not been clearly shown that pigs of the Polish breed had entered into its formation.

The Poland-China is coarse, hardy, prolific and much larger than the other ordinary breeds. It has a broad body, strong shoulders, short legs, head and shoulders well squared, pendulous ears, short head and eyes wide part. This breed is now considered the best, being the typical one for the production of lard and obtaining the best prices in the market. The Western farmer is accustomed to graze his pigs in the summer and the Poland-China is well adapted to this practice. It attains a very high weight, 880 to 1100 lbs for boars, 550 to 850 lbs. for sows or sometimes even more. Its prolific character is indicated by the evidence of about 100 breeders, which shows that each litter contains on an average 9.75 young. Litters of fifteen have been observed. Moreover the Poland-China is one of the most long-lived breeds ; the case is cited of a sow living for eleven years, during which time she had nineteen litters and a total of 189 descendants.

1103 – **Ration Experiments with Swine.** — FAVILLE, A. D., in *University of Wyoming Agricultural Experiment Station, Bulletin* No. 107, pp. 15-27. Laramie, Wyoming, September 1915.

*Pea Pasture* (1) *for Fattening Pigs. Comparison of hurdled and non-hurdled Pasture.* — For this experiment there were employed twenty one thrifty shoats divided into three groups of seven each group containing both pure-bred and grade Duroc-Jerseys of which the latter were three fourths Duroc and one fourth Tamworth. The supplementary ration was a mixture of one part of grain middlings with two parts of corn meal. In the course of the experiment, which lasted 112 days, each of the first two groups received 272 lbs of this ration and the third group 544 lbs. The peas for group I were hurdled off so that the pigs had access to fresh vines at short intervals. Group II was given the run of its entire field. Each of these two groups had at its disposal 1.47 acres of pasture. The third group was not put on pasture. The results of the experiment are given in Table I. They show that 365 lbs. or approximately 59 per cent less grain was required for 1000 lbs. gain when pea pasture, hurdled, replaced half the grain ration, and the saving was 313 lbs. or 51 per cent when

(1) See *B.* September 1916, No. 982.

the pasture was not hurdled. Comparison of the two groups proves that 52 lbs or approximately 17 per cent less grain was required for 100 lbs gain when the pea pasture was hurdled. One acre of hurdled pasture saved 1897 lbs. of grain, whilst one acre of the pasture not hurdled saved 1340 lbs. At the close of the pasture experiment Groups I and II were brought in and placed on a full grain ration, similar to the mixture they had been receiving, for 56 days. The results will be found in Table II. It will be seen at once that both pasture groups made considerably better gains than did Group III which had been fed on dry feed continuously. This more rapid development and the lesser consumption of grain for 100 lbs. gain should be credited to the residual effect of the pasture. Therefore taking the two experimental periods together, one acre of pasture, hurdled, saved 2086 lbs of grain, and one acre of pasture not hurdled saved 1568 lbs of grain, compared with an exclusivel ygrain feeding. Thus pea pasture is certainly a valuable aid in the production of cheap pork.

Comparison of the pure-bred and grade animals in the different groups shows that their gains of live weight were practically equal.

TABLE I. — *Pea Pasture, hurdled or not hurdled, for Pigs.*

| Group | Average initial live weight | Average final live weight | Avernge daily gain | Grain consumed for 100 lbs. gain | | |
|---|---|---|---|---|---|---|
| | | | | Corn | Middlings | Total |
| | lbs. | lbs. | lbs. | lbs. | lbs. | lbs. |
| I | 65 | 174 | 0.97 | 167 | 83 | 250 |
| II | 67.3 | 157.3 | 0.80 | 201 | 101 | 302 |
| III | 68.4 | 156.9 | 0.79 | 410 | 205 | 615 |

TABLE II. — *Residual Effect of Pea Pasture for Fattening Pigs.*

| Group | Average daily gain per pig. | Average daily grain per pig. | Grain for 100 lbs. gain |
|---|---|---|---|
| | lbs. | lbs. | lbs. |
| I | 1.37 | 6.75 | 494 |
| II | 1.28 | 6.13 | 479 |
| III | 1.04 | 5.66 | 546 |

*Alfalfa Tea for growing pigs.* — A feeding experiment lasting 168 days was made on two groups of pigs, of four each. The grain ration consisted of equal parts of corn meal and middlings and of this mixture 3.3 lbs. were given per head per day both to the first group and to the second. For Group I this ration was mixed with water before feeding, whilst for Group II the

water was replaced by alfalfa tea, prepared by macerating 3 lbs. of alfalfa meal with 20 lbs of cold water allowing to stand from one feeding period to the next and then filtering through two thicknesses of cheese cloth. The tea had the following percentage composition, water 98. ash 0.56, crude protein 0.46, crude fibre 0.02, nitrogen-free extract 0.06, ether extract traces. The results given in Table III show that for 100 lbs. gain approximately 14 per cent less grain was required when alfalfa tea was used in the ration (Group II), but it is not certain that the employment of a small amount of alfalfa meal in place of the tea would not have proved equally adavantageous.

TABLE III. — *Alfalfa tea for growing pigs.*

| Group | Average initial live weight | Average final live weight | Average daily gain | Orain consumed for 100 lbs. gain | | |
|---|---|---|---|---|---|---|
| | | | | Corn | Middlings | Total |
| | lbs. | lbs. | lbs. | lbs. | lbs. | lbs. |
| I | 36.8 | 135.0 | 0.58 | 278.5 | 278.5 | 557 |
| II | 37.3 | 151.8 | 0.68 | 239 | 239 | 478 |

*Comparison of corn meal and barley meal for fattening pigs.* — At the close of the experiment with alfalfa tea the eight pigs used were divided into two groups in such a way that each of the new groups contained two of the animals from each of the old groups. The pigs of Group I had an average weight of 146.8 lbs, those of Goup II 140 lbs. For 56 days Group I was fed with a mixture of four parts of corn meal with one part of alfalfa meal, Group II with a mixture of four parts of barley meal and one part alfalfa meal. Both the increase of live weight and the weight of food consumed per 100 lbs. gain were practically equal in the two groups, and the conclusion was drawn that barley-meal was as satisfactory a pig feed as corn meal.

*Comparison of pea hay and alfalfa hay for brood sows* — Two groups, each containing three brood sows were fed for 91 days with a mixture of two parts of corn meal and one part of middlings (3.6 lbs per head per day). In addition Group I was given 1.9 lbs of alfalfa hay, and Group II, 1.9 lbs. of pea hay per day. The results given in Table IV show alfalfa hay was somewhat the better.

TABLE IV. — *Comparison of pea hay and alfalfa hay for brood sows.*

| Group | Average initial live weight | Average final live weight | Average daily gain |
|---|---|---|---|
| | lbs. | lbs. | lbs. |
| I | 254 | 303 | 0.54 |
| II | 270 | 309 | 0.43 |

*Value of alfalfa hay in fattening rations for broods sows.* — Of the five animals available for the work, Group I containing two, received corn meal, Group II, containing three, was given a ration composed of four parts of corn meal and one part of alfalfa meal. The experiment lasted 42 days. The two groups fattened rapidily, Group I gaining 2.9 lbs. per head per day, Group II 2.1 lbs per head per day. The first group consumed 410 lbs. of corn meal, the second 389 lbs. corn meal and 97 lbs. of alfalfa hay per 100 lbs. gain.

1104 – **The Fattening of Pigs on Pasture under Forest.** — RAUSER, in *Mitteilungen der Vereinigun deutscher Schweinezüchter*, 23rd year, No. 16, pp. 185-187. Berlin, August 15, 1916.

In order to ascertain whether in time of shortage of food, pigs could be economically fattened in the forest, 30 hardy animals having a long snout and a good frame, which were accustomed to grazing, were purchased for this purpose. The forest was gratuitously put at the disposal of the writer by the commuune of Rodenbach.

The total weight of the 39 pigs before grazing was 2 056 lbs. or 52.6 lbs per head. The total purchase price was 2 541 marks, from which the price per pound of live weight is calculated to be 1.23 marks. The pigs are described as being of excellent quality.

The animals were put on pasture in three separate lots : 17 on September 4, 2 on September 9, and 20 on September 19. The forest is composed chiefly of oaks and beech-trees and has an area of 111 acres. During the night the pigs were brought back into a common stable of the village. Every morning and evening each pig was given some pounds of a supplementary food composed of molasses, bran, cocoa-cake, maize and potatoes, 55.6 cwt. being administered altogether, but the principal forage was furnished by the forest. The trees and game suffered no damage from the pigs. The latter were taken off the pasture, some in October, some in November and the remainder in December. One had died 17 days after being put on pasture, and three, on account of their abnormal developement, had to be slaughtered before the end of the experitent. Altogether the animals spent 3 189 days in the forest, or 81 days per pig. In this period the total increase in weight was 1 785.5 lbs. that is scarcely 8.8 oz. per day, the four pigs eliminated being included in the calculation. On the other hand with some animals increase amounted to 8.8 to 13.2 oz.

The financial result of the experiment was as follows:

| | |
|---|---|
| Cost of the 39 pigs | 2 541 *marks* |
| Concentrated food and cost of feeding | 1 426 |
| Rent of stable, repairs of fences | 20 |
| Wages of swineherd | 47 |
| Cost of transport | 21 |
| | 4 055 *marks* |
| *Receipts.* | |
| Sale price of 38 pigs | 4 036 *marks* |
| Loss | 19 *marks* |

If all the animals had survived until the end of the experiment there would have been a profit instead of a loss. It should also be mentioned that the excessively high price of maize had a considerable effect on the result Although the latter was negative in this case, the writer believes that this method of fattening would be remunerative in Germany, since by it otherwise useless products of the forest can be transformed into valuable pork. The experiment is to be repeated in other communes.

1105 – **British Berkshire Society's Report.** — *Farmer & Stock Breeder*, Vol. XXIX, No. 1406, p. 1433. London, Sept. 4, 1916.

The British Berkshire Society (1) has issued its annual report consisting of a record of the main activities of the breed during the past year. A table of export certificates issued for the past 10 years shows that 2181 certificates have been given, 999 of which were for pigs exported to the Argentine. The United States comes next in the list with 147, Canada third with 136, Russia fourth with 129, and Brazil fifth with 127. It is remarked, as indicating the weights to which the breed will grow, that Berkshire sows at six months, in ordinary growing condition and given proper exercise, weigh from 150 to 160 lb, and boars from 160 to 170 lb. At one year sows in breeding condition weigh from 400 to 500 lb. and when full grown from 550 to 650 lb. Boars one year old in show condition have been known to weigh 600 lb. The success of the breed at Smithfield is discussed where no other breed has had such a long run of successes in the carcass classes.

1106 – **A Study of Constitutional Vigour in Poultry.** — RICE, J. E. *Cornell University Agricultural Experiment Station, Department of Poultry Husbandry, Bulletin* No. 345, pp. 439-357. Ithaca, N. Y., 1914. POULTRY

In the autumn of 1909 two experimental flocks of White Leghorn hens were formed. For the one all the largest hens were selected and it was called the strong flock, for the other, or weak flock, the smaller hens were chosen. During the next two years all the progeny were also divided up into strong and weak flocks. Both kinds of fowls were kept under identical conditions and received the usual Cornell rations for laying hens, *i. e.* a dry grain mixture made up of :

| in winter : | | | | in summer : | | | |
|---|---|---|---|---|---|---|---|
| 60 | lbs. | of | wheat | 60 | lbs. | of | wheat |
| 60 | " | " | maize | 60 | " | " | maize |
| 30 | " | " | oats | 60 | " | " | oats |
| 30 | " | " | buckwheat | | | | |

fed morning and afternoon in straw litter ; and in the afternoon only, a mash consisting of :

| | | | | |
|---|---|---|---|---|
| 60 | lbs. | of | maize | meal |
| 60 | " | " | wheat | middlings |
| 30 | " | " | wheat | bran |
| 10 | " | " | alfalfa | meal |
| 50 | " | " | beef | scrap |
| 1 | " | " | salt | |

(1) E. Humfrey, Shippon, Abingdon, Berks. Secretary.

TABLE I. — *Average food consumption per hen per annum.*

| | Strong flocks | Weak flocks |
|---|---|---|
| | lbs. | lbs. |
| Total quantity of food | 80.30 | 75.91 |
| Total quantity of food including grit and shell | 77.07 | 72.82 |
| Total quantity of food including grit, shell, and green food | 67.49 | 62.73 |
| Total whole and ground grain | 60.16 | 56.58 |
| Total whole grain | 44.46 | 44.05 |
| Ground grain | 15.70 | 12.53 |
| Meat scrap | 4.82 | 3.95 |
| Grit and shell | 3.23 | 3.09 |
| Green food | 9.58 | 10.09 |
| | per cent | per cent |
| Whole grain in total food including grit, shell, and green food | 65, 9 | 70,2 |
| Ground grain in total food including grit, shell and green food | 23.3 | 20,0 |
| Meat scrap in total food excluding grit, shell and green food | 7.1 | 6,3 |
| Grit and shell in total food including green food | 4.6 | 4,7 |

TABLE II. — *Food nutrients consumed per hen per annum.*

| | Strong flocks | Weak flocks |
|---|---|---|
| | lbs. | lbs. |
| Dry matter | 61.73 | 56.93 |
| Protein | 9.69 | 8.50 |
| Carbohydrates | 39.50 | 37.72 |
| Fat | 2.59 | 2.41 |
| Ash, including grit and shell | 1.91 | 1.73 |
| Albuminoid ratio | 1 : 4.68 | 1 : 5.08 |

The records for the two original flocks and all their progeny (amounting to 76 strong and 75 weak flocks) have been summarised for the three years 1909-1911 (Tables I to V). The strong fowls consumed more food than did the weak fowls. Both had the same amount of grain, but the strong fowls were able to consume more meal and meat scrap. Consumption of grit and shell were practically equal in the two groups. The

TABLE III. — *Consumption per unit live weight and per dozen eggs produced.*

| | Strong flocks | Weak flocks |
|---|---|---|
| Dry matter consumed per pound of live weight, in lbs. | 17.68 | 17.68 |
| Food consumed per dozen eggs laid, in lbs. | 7.68 | 8.46 |
| Cost of food per dozen eggs laid. | $ 0.114 | $ 0.123 |
| Total number of eggs produced per hen | 125.36 | 107.61 |

TABLE IV. — *Hatching and mortality records.*

| | | Strong flocks | Weak flocks |
|---|---|---|---|
| Number of eggs set | | 1.446 | 1.305 |
| Percentage of fertile eggs | | 89.4 | 91.4 |
| Percentage of eggs hatched in fertile eggs. | | 55.4 | 56.4 |
| Percentage of eggs hatched in number set | | 49.6 | 51.5 |
| Average weight of eggs set in pounds. | | 0.2081 | 0.2198 |
| Average weight of chicks hatched in lbs | | 0.09096 | 0.0767 |
| Percentage mortality of chicks to six weeks of age | | 23.15 | 19.64 |
| Flock mortality | Total number of hens | 108 | 104 |
| | Total number of deaths | 12 | 12 |
| | Percentage mortality | 11.1 | 12.5 |

TABLE V. — *Average receipts and expenses per hen per annum.*

| | Strong flocks | Weak flocks |
|---|---|---|
| *Receipts :* | $ | $ |
| Value of eggs | 3.12 | 2.67 |
| Value of gain in live weight | 0.07 | 0.06 |
| Total | 3.19 | 2.73 |
| *Expenses :* | | |
| Cost of food | 1.19 | 1.10 |
| Cost of loss of stock | 0.08 | 0.11 |
| Total | 1.27 | 1.21 |
| Balance profit | 1.92 | 1.52 |

number of lbs. of dry matter eaten per lb. of live weight averages the same for both strong and weak birds (Table III), but whereas the strong fowls required only 7.68 lbs. of food for every dozen eggs laid, the weaker flocks required 8.46 lbs. After the first period of the experiment, egg production was consistently heavier in the strong flocks, the difference amounting to 17.75 eggs per hen per annum and being sufficient to justify the selection of stronger pullets for egg production.

1107 – **Rations for Growing and Fattening Roasters and Capons.** — Buss, W. J., *Ohio Agricultural Experiment Station. Bulletin* No. 284, pp. 155-172. Wooster, Ohio, 1916.

*Experiment* 1. — The object of this experiment was to compare the relative efficiency and economy of the different rations for the production of roasters and capons, and to determine the amount of feed required to produce one pound of live weight increase. The chickens used were 139 pure and 56 cross-bred Barred Plymouth Rocks, the crossbreds being the offspring of Light Brahma and Leghorn crosses. Of these 195 birds 94 were cockerels, all except 8 of which were caponised when 4 months old. At the start the chicks were only two months old and they were kept under experiment for 32 weeks.

The five rations in question are given below.

| Ration | Grain | Mash |
|---|---|---|
| I | maize | 2 parts ground maize.<br>1 " beef scrap. |
| II | maize | 1 " ground maize<br>2 " beef scrap.<br>The amount of maize was increased one part each week so that by the 32nd. week, the mash consisted of:<br>32 parts ground maize.<br>2 " beef scrap. |
| III | 11 parts maize<br>15 " wheat<br>4 " oats | 2 " ground maize.<br>2 " bran.<br>1 " beef scrap. |
| IV | maize | 7 " ground maize.<br>3 " tankage. |
| V | maize | 3 " ground maize.<br>4 " oilmeal.<br>Ration fed for 12 weeks by which time the chicks were doing so badly that they had to be put on Ration I. |

In addition all birds had access to grit, charcoal and an abundant supply of water. The mash was kept in hoppers to which the fowls had access at all times.

*Experiment* 2. — The feeding trials were repeated with 125 purebred Plymouth Rock capons, using exactly the same rations as before, except in the case of the fifth group where the birds were fed on ration I, but were confined to small pens instead of being allowed to range. Four to four and a half months old birds were chosen and the experiment lasted 19 weeks.

The adjoining Table summarises the results of the two experiments. Taking the average of both trials, ration I produced a slightly higher rate of gain than did the others. Ration II which contained a constantly decreasing amount of protein lowered the rate of gain and raised the food consumption. The bird, fed on ration III consumed the most food per bird and per pound of live weight increase ; the cost of the food for this group was about 30 per cent higher than that for the others. Capons confined to small pens, while consuming only 2 per cent less feed per bird, gained about 17 per cent less than capons allowed to range, and the cost of their food was consequently 17 per cent higher. Prices of foods used in the calculations were as follows :

| | Price per cwt. | | Price per cwt. |
|---|---|---|---|
| | $ | | $ |
| Shelled maize | 1.00 | Beef scrap | 2.75 |
| Ground " | 1.09 | Tankage | 2.40 |
| Wheat | 1.50 | Oil meal | 1.80 |
| Bran | 1.40 | Grit | 0.75 |
| Oats | 1.25 | Charcoal | 2.25 |

In the first experiment where pullets, cockerels and capons were fed together, capons invariably made the most rapid gains, the average total live weight increase being for capons 6.8 lbs., for cockerels 6.1 lbs. and for pullets 4.6 lbs.

*Comparative efficiency of rations for fattening roasters and capons.*

| Ration | Average total gain per bird | | | Average total consumption per bird | | | Food consumed per lb. of live weight increase | | | Cost of food per lb. of live weight increase | | |
|---|---|---|---|---|---|---|---|---|---|---|---|---|
| | Experiment | | Mean | Experiment | | Mean | Experiment | | Mean | Experiment | | Mean |
| | 1 | 2 | | 1 | 2 | | 1 | 2 | | 1 | 2 | |
| | lbs. | lbs. | lbs. | lbs. | lbs. | lbs. | lbs. | lbs. | lbs. | cents. | cents. | cents. |
| I | 6,5 | 4,6 | 5,55 | 47,2 | 37,7 | 42.4 | 7,3 | 8,1 | 7,7 | 9,1 | 10,1 | 9,6 |
| II | 6,4 | 4,5 | 5,45 | 49,2 | 38,8 | 43,5 | 7,7 | 8,6 | 8,1 | 8.7 | 10,3 | 9,5 |
| III | 6,6 | 4,4 | 5,50 | 55,8 | 41,3 | 48,5 | 8,5 | 9,2 | 8,8 | 11,7 | 13,2 | 12,4 |
| IV | 5,9 | 4,6 | 5,25 | 45,5 | 37,6 | 41,5 | 7,7 | 8,2 | 7,9 | 9,1 | 9,8 | 9,4 |
| V | 5,8 | 3,8 | 4,80 | 43,5 | 36,2 | 39,8 | 7,5 | 9,5 | 8,5 | 9,3 | 11,9 | 10,6 |

*Results expressed as a percentage of those fed on ration I.*

| | | | | | | | | | | | | |
|---|---|---|---|---|---|---|---|---|---|---|---|---|
| I | 100 | 100 | 100 | 100 | 100 | 100 | 100 | 100 | 100 | 100 | 100 | 100 |
| II | 99 | 97,1 | 98,2 | 104,3 | 103 | 104,8 | 105,3 | 106,1 | 105,1 | 95,4 | 101,6 | 97 |
| III | 102 | 96,7 | 99,5 | 118 | 109,6 | 115,4 | 115,4 | 113,8 | 114,5 | 128,3 | 130,5 | 128,7 |
| IV | 91,6 | 99,2 | 94,5 | 96,4 | 99,8 | 98,1 | 104,8 | 100,6 | 103,2 | 100,1 | 96,8 | 98,8 |
| V | — | 82,4 | — | — | 96,1 | — | — | 117,1 | — | — | 117,5 | — |

FISH CULTURE.

1108 **Investigations on the Number of Eggs Produced by Certain Fish.** — MART. H., in *Allgemeine Fischerei-Zeitung*, Year XLI. No. 16, pp. 255-260. Munich, August, 15, 1916.

Very little is known with regard to the exact number of eggs produced by various species of fish ; hitherto only rough estimates have been made or where experiments have been carried out, the females have not been of the same age. At the Bavarian trout hatchery (Starnberg), 58 common trout (*Trutta fario*) and 54 rainbow trout (*Trutta iridea*) were stripped and the ova were carefully counted with results given in Tables I and II.

It would appear that the heavier, *i. e.* the older, the fish the greater the number of eggs produced ; but if the results are considered from the point of view of production per unit weight, the young fish yield a relatively larger number of eggs, though the eggs are not so heavy. In other words with a given quantity of matter young fish form a larger number of eggs than do older fish.

As these results could be questioned on the grounds that some of the fish might have been incompletely stripped or that the fish might have

TABLE I. — *Number of eggs produced by common trout.*

| Weight of fish | | | | | No. of eggs per fish | Weight of eggs per 100 parts live weight | Weight 1000 eggs | No. of eggs per unit weight of live weight (1 kilog.) |
|---|---|---|---|---|---|---|---|---|
| lbs. | oz. | | lbs. | oz. | | | oz. | |
| | 7 | — | | 8.5 | 707 | 23,6 | 2.7 | 2 993 |
| | 8.5 | — | | 10.5 | 751 | 22,0 | 2.9 | 2 646 |
| | 10.5 | — | | 14 | 879 | 20,4 | 3.1 | 2 594 |
| | 14 | — | 1 | 5 | 1 090 | 21,0 | 3.4 | 2 178 |
| 1 | 5 | — | 2 | 11 | 1 293 | 19,3 | 3,7 | 1 829 |
| over | | | 2 | 11 | 3 017 | 19,1 | 3.6 | 1 839 |

TABLE II. — *Number of eggs produced by rainbow trout.*

| Weight of fish | | | | | No. of eggs per fish | Weight of eggs per 100 parts live weight | Weight of 1000 eggs | No. of eggs per unit weight of live weight (1 kilog.) |
|---|---|---|---|---|---|---|---|---|
| lbs. | oz. | | lbs. | oz. | | | oz. | |
| | 8.5 | — | | 10.5 | 945 | 18.0 | 1.7 | 3 577 |
| | 10.5 | — | | 14 | 1 154 | 16.6 | 1.6 | 3 323 |
| | 14 | — | 1 | 5 | 1 547 | 17.4 | 2.0 | 3 065 |
| 1 | 5 | — | 2 | 11 | 1 975 | 16.1 | 2.4 | 2 332 |
| over | | | 2 | 11 | 2 798 | 15.8 | 3.0 | 1 823 |

TABLE III. — *Number of eggs produced by perch.*

| Length of body | Weight of body | Weight of eggs | No. of eggs per fish | Weight of eggs per 100 parts live weight | No. of eggs per unit weight live weight (1 kilog.) |
|---|---|---|---|---|---|
| in. | oz. | gms. (1) | | | |
| 10.2 | 8.7 | 31.00 | 30 480 | 12.4 | 121 000 |
| 9.3 | 6.9 | 23.20 | 26 390 | 12.0 | 129 000 |
| 8.5 | 6.5 | 34.50 | 24 980 | 18.0 | 133 000 |
| 9.3 | 6.0 | 27.60 | 23 740 | 16.2 | 139 000 |
| 7.3 | 3.7 | 14.00 | 14 700 | 13.1 | 137 000 |
| 7.1 | 2.4 | 10.40 | 11 160 | 15.0 | 159 000 |
| 7.1 | 2.3 | 9.94 | 9 480 | 15.4 | 146 000 |
| 5.9 | 1.4 | 6.65 | 6 120 | 17.0 | 157 000 |
| 5.4 | 0.9 | 3.97 | 4 190 | 15.3 | 160 000 |
| 5.2 | 0.9 | 5.10 | 4 810 | 20.0 | 188 000 |
| 5.1 | 0.8 | 5.05 | 4 060 | 22.5 | 184 000 |
| 5.0 | 0.7 | 4.46 | 4 320 | 22.0 | 203 000 |
| 4.0 | 0.4 | 3.14 | 3 710 | 18.5 | 218 000 |
| Mean 6.9 | 3.8 | 13.77 | 12 934 | 16.7 | 159 538 |

(1) 1 gm. = 0.035 oz. = 0.56 drachms.

TABLE IV. — *Number of eggs produced by roach, ruffe, and Chondrostoma nasus.*

| | Length of body | Weight of body | Weight of eggs | No. of eggs per fish | Weight of eggs per 100 parts live weight | No. of eggs per unit weight of live weight (1 kilog.) |
|---|---|---|---|---|---|---|
| | in. | oz. | gms. | | | |
| Roach . . . . . | 9.8 | 8.3 | 37 | 66 250 | 15.5 | 275 000 |
| *Chondrostoma nasus* . | 14.4 | 23.6 | 97.75 | 32 250 | 13.4 | 44 500 |
| Ruffe. . . . . | 5.9 | 13 | 4.71 | 4 705 | 12.7 | 370 000 |

begun to spawn before they were captured, the experiments were repeated using perch (*Perca fluviatilis*). Females just about to spawn were killed and weighed. Their ovaries were removed, part of each was dissected, the ova were counted and accurately weighed. The weight of the whole ovary was likewise determined and from this, the number of eggs in each fish was calculated. The results are given in Table III and confirm those obtained in the previous experiments.

A few relevant figures for roach (*Leuciscus rutilus*) for *Chondrostoma nasus*, and for the ruffe (*Acerina cernua*) are appended in Table IV.

1109 - **The Improvement of Carp and Pikeperch Fisheries in Lake Balaton, Hungary**(1). — REPASSY, M. in *Halaszat* (Fishing), Year XVII, No. 10, pp. 93-99. Budapest, May 15, 1916.

In 1915, the company which holds the fishing rights of Lake Balaton adopted a new scheme for restocking the lake. It was decided to propagate the more valuable kinds of fish and more especially carp and pikeperch, the latter being the species of the greatest economic importance. The close season was fixed for the whole of the month of April. During that period artificial spawning beds are to be laid down in places frequented by pikeperch, and when spawning is finished the ova are to be collected and placed in baskets close in to the shore and where the water is fairly still. Five hundred spawning beds are to be used and it is expected that the eggs collected will amount to at least 50 millions. Every autumn 10 tons of selected fry will be set free in the lake. This will consist either of one year old pikeperch averaging 2 $^3/_4$ to 3 $^1/_2$ ozs. or two year old carp weighing from $^3/_4$ to 1 $^1/_2$ oz.

Ever since the fishing was brought under revised management in 1900, careful records have been kept of the amounts of the different species taken from the lake. The figures from 1900-1915 are given in Table I. The total amount of fish landed varies considerably from year to year. Daily catches even are extremely irregular, in one instance there is a record of as much as 30 tons being taken in one day in the Siolfolk fishing ground alone. To eliminate these variations as much as possible the figures have been collected into two 6 year periods in Table II.

Treated in this way the records show that there has been a perceptible change in the proportion which valuable species bear to inferior ones, resulting in a small increase of the former. With regard to the total production, there has been little variation between the two periods, the annual produce being 15.7 lbs. in the first period and 15.5 lbs. during the second period per cadastral arpent. These figures are low compared to yields obtained in artificial lakes, and bearing in mind the limits of the food supply in natural waters it would appear that they are not susceptible to much increase. The improvement of the fishery will rather be in the direction of developing the valuable species at the expense of the inferior ones which are still six times more numerous than carp and pikeperch. During the second six years period the slight change in ratio between the valuable and inferior kinds (about 10 per cent) made a difference in the returns of over £ 750 per annum ; and if it were possible to replace another 100 tons of bream or shad by 100 tons of carp the annual value of the fish landed might be increased by about £ 3000.

In the years 1901, 1906 and 1909 carp fry were set free in Lake Balaton and it may be seen from Table I. that these attempts at stocking the lake had a distinct effect on the catches of the following seasons.

---

(1) See *B.* Feb. 1916, pp. 180-187 ; *Fishing and Fish Culture in Hungary.* Original article by J. DE LANDGRAF.

TABLE I.

*Amounts of the different kinds of fish taken in Lake Balaton, 1900-1915 (long tons).*

| Year | Inferior kinds | | | Valuable kinds | | | | Total production | Ratio: inferior kinds to valuable kinds | Remarks |
|---|---|---|---|---|---|---|---|---|---|---|
| | Bream | Thwaite Shad (*Alosa Finta*) | *Aspius rapax* | Pikeperch | Carp | Sheat fish *Silurus glanis* | Pike and tench | | | |
| 1900–1901 | 450 | 327 | 15 | 80 | 4 | 7 | 29 | 912 | 6,7 : 1 | |
| 1901–1902 | 283 | 131 | 6 | 92 | 4 | 2 | 21 | 540 | 3,5 : 1 | Fishing under ice. |
| 1902–1903 | 494 | 90 | 11 | 91 | 10 | 6 | 31 | 734 | 4,3 : 1 | |
| 1903–1904 | 498 | 314 | 11 | 58 | 9 | 5 | 16 | 911 | 9,4 : 1 | |
| 1904–1905 | 622 | 178 | 8 | 84 | 7 | 4 | 14 | 917 | 9,9 : 1 | |
| 1905–1906 | 353 | 151 | 8 | 74 | 7 | 5 | 12 | 610 | 5,2 : 1 | » » » |
| 1906–1907 | 562 | 68 | 8 | 100 | 7 | 5 | 21 | 772 | 4,8 : 1 | |
| 1907–1908 | 472 | 176 | 9 | 78 | 7 | 5 | 29 | 776 | 5,5 : 1 | |
| 1908–1909 | 534 | 131 | 15 | 92 | 14 | 6 | 15 | 806 | 5,4 : 1 | |
| 1909–1910 | 514 | 112 | 13 | 93 | 18 | 5 | 7 | 763 | 4,2 : 1 | |
| 1910–1911 | 558 | 97 | 8 | 72 | 8 | 5 | 14 | 762 | 6,7 : 1 | |
| 1911–1912 | 414 | 160 | 9 | 82 | 8 | 6 | 23 | 702 | 4,9 : 1 | |
| 1912–1913 | 398 | 212 | 11 | 71 | 11 | 7 | 13 | 725 | 6,0 : 1 | |
| 1913–1914 | 292 | 59 | 13 | 63 | 7 | 6 | 9 | 448 | 4,3 : 1 | Scarcity of labour. |
| 1914–1915 | 322 | 73 | 3 | 38 | 3 | 2 | 8 | 451 | 7,5 : 1 | |

TABLE II.

*Comparative yields of fish from Lake Balaton in two 6 year periods,* 1900-1906 *and* 1900-1912 (*long tons*).

| Year | Inferior kinds | | | Valuable kinds | | | | Total production | Ratio: inferior kinds to valuable kinds |
|---|---|---|---|---|---|---|---|---|---|
| | Bream | Bleak (*Alosa Finta*) | *Aspius rapax* | Pikeperch | Carp | *Silurus glanis* | Pike and tench | | |
| | | | | *Total amounts.* | | | | | |
| 1900–1906 | 27 01 | 11 91 | 59 | 4 79 | 41 | 30 | 1 23 | 46 23 | 5,7 : 1 |
| 1906–1912 | 30 54 | 7 43 | 62 | 5 18 | 61 | 33 | 1 08 | 45 80 | 5,2 : 1 |
| Difference | + 3 53 | — 4 48 | + 3 | + 39 | + 20 | + 3 | — 15 | — 43 | |
| | | | | *Mean annual yield.* | | | | | |
| 1900–1906 | 4 50 | 1 98 | 9,8 | 80 | 7 | 5,0 | 20 | 7 70 | |
| 1906–1912 | 5 09 | 1 24 | 10,4 | 86 | 10 | 5,5 | 18 | 7 63 | |
| Difference | + 59 | — 74 | + 0,6 | + 6 | 3 | + 0,5 | — 2 | — 7 | |
| Difference per cent | + 13 % | — 38 % | + 6 % | + 8 % | 49 % | + 10 % | — 12 % | — 1 % | |

## FARM ENGINEERING.

1110 – **Machinery Cost of Farm Operations in Western New York.** — MOWRY, H. H. in *Bulletin* No. 338, *United States Department of Agriculture*, Washington, D. C., January 18, 1916.

AGRICULTURAL MACHINERY AND IMPLEMENTS

The aim of the writer (Assistant Agriculturist, Office of Farm Management) is to determine what is, under normal conditions, the average service given by agricultural implements generally in use in seven different counties in New York State: Niagara, Orleans, Monroe, Wayne, Genesee Livingston and Ontario. In response to an enquiry addressed to several thousands of farmers, reports were received on some thousands of machines of 19 different kinds: 1 165 walking ploughs, 294 sulley ploughs, 1 160 spring-tooth harrows, 824 spike-tooth harrows, 738 disc harrows 1 173 land rollers, 1 061 grain drills, 72 one-row corn planters, 97 two-row corn planters, 1 114 one horse cultivators, 881 riding cultivators, 217 cabbage transplanters, 359 engine sprayers, 1 232 mowers, 1 217 hay rakes, 416 hay tedders, 563 bean harvesters, 1 028 grain binders, and 458 corn binders.

*Method of Computing Replacement Costs.* — The replacement charge per year, per acre, or per day is based on the proportional use and not on the sale price of the machine at any time during its life. For the farmer who expects to remain in business for a period exceeding the life of the machine, this is the logical method to use.

The tables of which we give an extract, will be found useful in estimating the machinery cost of work and the fair charge against work already done. They will also assist the man expecting to give up farming and sell his machinery, or wishing to buy secondhand implements. Both buyer and seller will then have a fair means of arriving at a fair value in their transactions.

*Method of Computing the Interest Charge* (1). — Where a part of the first cost of equipment is charged off annually to provide for its replacement, the average investment upon which interest must be allowed is shown in the table below:

*Method of Determining the Service of Farm Machinery.* — The writer describes the method used to obtain his results: it is based on the average figures for each type of implement in New York State.

The service expressed in acres was obtained by multiplying the service in years by the average work done annually. The work in days was found

(1) The average investment in equipment, where a fraction of its first cost is charged off each year for replacement, may be found by the rule:

$$\text{Average investment} = \text{first cost} \times \frac{\text{years of service} + 1}{\text{years of service} \times 2}$$

By multiplying the average investment by the prevailing rate of interest in the locality where the equipment is located the annual interest charge against the equipment is found.

*Technical Data Relating to the Different Machines.*

| Kind of machine | Average area covered annually — Acres | Average length of service rendered — Years | Average area covered during life — Acres | Average cost when new — $ | Average cost of repairs during life — $ | Total interest during life at 6 % — $ | Total cost of machine during life — $ | Remarks |
|---|---|---|---|---|---|---|---|---|
| *Cultivating machines:* | | | | | | | | |
| One-horse cultivator | 16.9 | 14 | 236.6 | 6.50 | 4.90 | 2.94 | 14.34 | Most economical on larger areas. |
| Riding cultivator | 39.3 | 12.5 | 491.3 | 32.00 | 12.38 | 13.00 | 57.38 | The overhead charges are more than twice those for the one-horse machine. |
| Walking plough | 32.9 | 11.7 | 384.9 | 10.00 | 23.99 | 3.86 | 37.85 | Very strong; repairs expensive; price low. |
| Sulky plough | 30.9 | 8.1 | 250.3 | 42.50 | 17.17 | 11.58 | 71.25 | Heavy wear on working parts. |
| Spike-tooth harrow | 48.3 | 14 | 676.2 | 10.50 | 4.76 | 4.76 | 20.02 | Use not general; life $^1/_4$ longer than the following machine. |
| Spring-tooth harrow | 71.1 | 11 | 782.1 | 17.50 | 8.25 | 5.83 | 31.58 | Gives long service. |
| Disc harrow | 35.2 | 13 | 457.6 | 27.00 | 6.50 | 11.31 | 44.81 | The larger model costs $^1/_4$ more than the small. |
| Land roller | 65.9 | 16 | 1 054.4 | 24.00 | 7.52 | 11.20 | 42.72 | Low interest charge. |
| Grain drill | 46.3 | 16.4 | 759.3 | 72.00 | 20.66 | 37.56 | 130.22 | Substantially built. |
| Corn planter (2-row) | 8.3 | 11 | 91.3 | 40.00 | 18.48 | 12.41 | 70.89 | Repairs comparatively expensive. |
| Cabbage transplanter | 12.5 | 12.8 | 160.0 | 45.00 | 14.46 | 18.56 | 78.02 | Most economical on large areas. |
| *Harvesting machines:* | | | | | | | | |
| Hay tedder | 21.6 | 14 | 302.4 | 34.00 | 5.74 | 15.26 | 55.00 | Suitable for large areas. |
| Hay rake | 43 | 14.5 | 623.5 | 24.00 | 5.22 | 11.17 | 40.39 | Repairs low. |
| Mower | 28 | 14.8 | 414.4 | 41.00 | 26.94 | 19.39 | 87.33 | Average farmer does not obtain maximum work from machine. |
| Grain binder | 35.2 | 15.4 | 542.1 | 125.00 | 31.20 | 61.60 | 218.02 | Small models last longer but do less work. |
| Corn binder | 21.2 | 10.8 | 227.9 | 125.00 | 21.92 | 43.28 | 190.20 | Repairs expensive. |
| Bean harvester | 16.9 | 12.9 | 218.0 | 25.00 | 13.03 | 10.32 | 48.35 | Long life. |

| Fraction of cost new charged off annually | Average investment (per cent of first cost) | Fraction of cost new charged off annually | Average investment (per cent of first cost) | Fraction of cost new charged off annually | Average investment (per cent of first cost) |
|---|---|---|---|---|---|
| | % | | % | | % |
| All . . . . . | 100.00 | One-eighth . . . | 56.25 | One fifteenth . . | 53.33 |
| One-half . . . . | 75.00 | One-ninth . . . | 55.55 | One-sixteenth. . | 53.12 |
| One-third . . . . | 66.66 | One-tenth . . . | 55.00 | One-seventeenth. | 52.93 |
| One-fourth . . . | 62.50 | One-eleventh . . | 54.54 | One eighteenth . | 52.77 |
| One-fifth . . . . | 60.00 | One-twelfth . . | 54.17 | One-nineteenth . | 52.63 |
| One-sixth . . . . | 58.33 | One-thirteenth . | 53.84 | One-twentieth. . | 52.50 |
| One-seventh. . . | 57.14 | One fourteenth . | 53.57 | | |

by dividing the service in acres by the normal acreage or day's work done by the machines.

*Cost of Repairs.* — Where ordinary care is used by the operator, the repair charges should make up but a small proportion of the total cost.

*Relation of Annual Repairs to First Cost.* — The writer gives the type of implement, the annual cost for repairs calculated as per centage of the first cost, and the average present value of the equipment. The percentage varied from 1.2 to 5.8 except for the walking plough for which the percentage was over 20.5.

*Shelter.* — There are no data available on the relative life of machinery when housed and when not housed. Farmers allow 20 per cent of the first cost of the machine in cases where special shelter is necessary.

*Relation of Machinery Cost to Total Cost of Farm Operations.* — The writer takes account of man-time and horse-time. One man is able to manage all the implements except the cabbage transplanter which requires three men. The machine cost of the different operations does not exceed 50 per cent of the whole: ranging from 4.7 per cent for the walking plough to 42.8 per cent for the grain binder.

*Conclusion.* — The data collected by the writer should help agriculturists to determine the probable length of service for the various implements, the normal cost of repairs, and, allowing for the size of their holdings, to decide whether to buy or hire farm machinery.

1111 – **Maillet Motor Cultivator with Controlled Rotary Blades.** — FREMIEL, VICTOR, in *Le Génie rural*, 8th year, No. 62, New Series, No. 2 of 1916, pp. 9-14, Paris, July, 1916.

This invention is a distinct advance on the 2 or 3 speed motors of the usual American pattern. In practice the 2 or 3 speeds are unsatisfactory and often difficult to operate, whether by shifting the blades on their axle or by changing the speed of rotation ; this latter method leads to objectionable complication in the gear-box. In order to avoid these difficulties the inventor has combined the speed of rotation with the travelling speed. He has designed a ploughing mechanism, illustrated in Fig. 2, which consists

essentially of an axle carrying a spiral blade. This does the work of a series of little ploughs with the working parts : coulter, share and mould-board. This mechanism is caused to rotate by the same motor which moves the whole machine forward along the line of work.

As the machine moves forward, the soil along the whole length of the spiral blade is successively lifted and turned by the appropriate combined action of the rotating and travelling gears. To provide the range of speeds desired, the designer has fitted two sets of gearing operated by levers or pedals. The speed of rotation is so controlled relative to the travelling speed

MAILLET *Cultivator.*

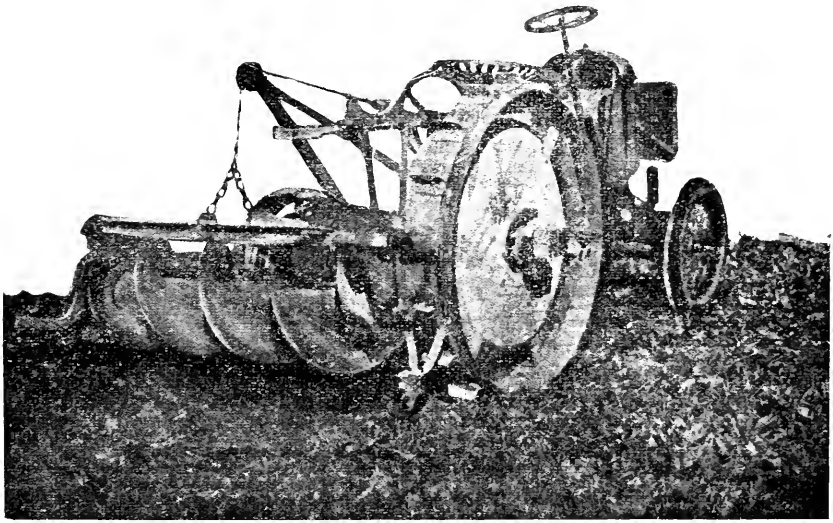

Fig. 1. — General view.

that any cut may be taken from a mere shaving to a large swathe, *i. e.* the soil is finely or coarsely cultivated.

The motor and clutch are enclosed in a case 4 (fig. 2) which contains the gears A and B giving the two speeds to the shaft 5, thence to the bevel-pinion 6 and bevel-wheel 7 keyed on the transverse shaft 8. On this shaft two pinions C and D engage with the wheels 10 and 10 a ; this allows the speed of shaft 11 to be varied according to which pair of wheels are in gear.

| In gear | Forward movement | Blades |
|---|---|---|
| *A* and *C* | 32.8 yards | 90 turns |
| *A* " *D* | 43.7 " | 90 " |
| *B* " *C* | 44.8 " | 130 " |
| *B* " *D* | 60.1 " | 130 " |

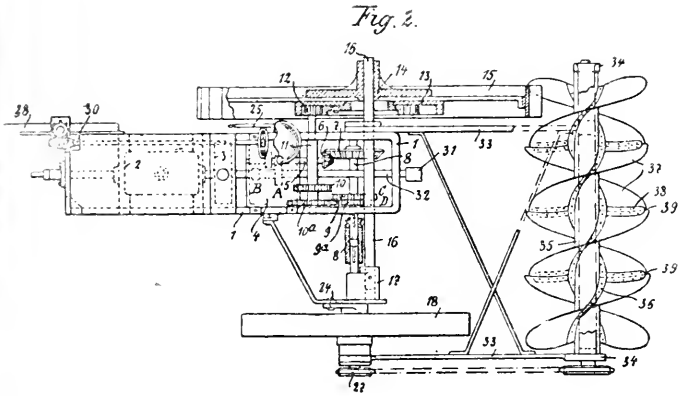


Plan.

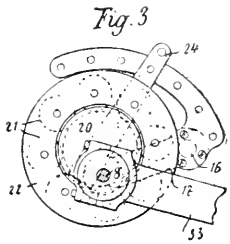


Clutch.

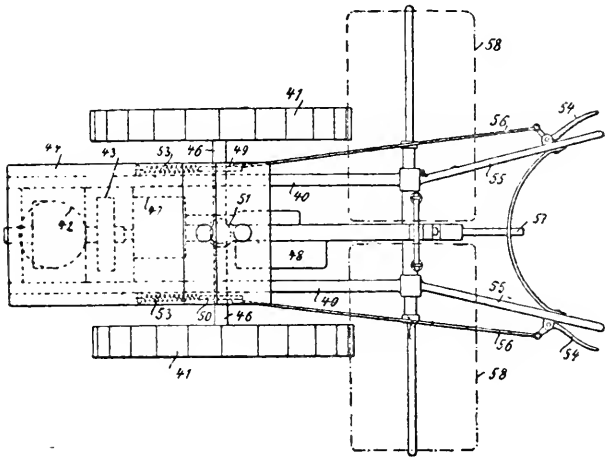

Fig. 4. — Second Model of the MAILLET cultivator. Plan.

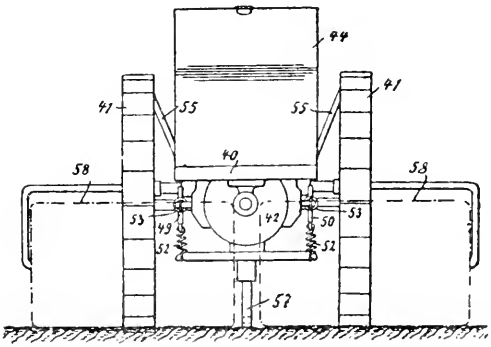

Fig. 5. — Front view.

The end of shaft 8 carries the sprocket 27 which drives the cultivator by a chain. The axle of the cultivator is cast with flanges 36 to which the spiral blades 37 are attached.

The other end of shaft 11 carries a pinion 12 which turns the driving wheel 15 through a gear 13 mounted on the hub 14.

As shown in fig. 2, the hub 14 of the driving wheel is carried far out on the axle 16 so that the load in the latter is as close as possible to the centre of gravity of the wheel. The track of the machine can be altered by moving the sleeve 17 along the axle 16 to which it can be fixed by bolts.

To keep the machine level when at work, the lever 24 (fig. 3) is used; this is connected to a centre-piece 20 controlled by a hand lever.

In another model, illustrated in fig. 4, the machine consists of a frame 40 carried by two wheels 41 which serve both for driving and steering; the motor 42 and clutch 43 are covered by a bonnet 44. A first gear-box 47 controls both the travelling speed and that of the implement; a second gear-box 48 acts independently on the travelling speed. This machine, like that described above, provides two changes of speed; to keep the axle parallel with the plan of the machine on level ground, the hand controls 54 acts on the verticle springs 52 (fig. 5); on uneven country they allow the wheels to adapt themselves to the irregularities of the ground without altering the position of the machine laterally. Two other springs 53 act horizontally and keep the track parallel to the frame. The machine is steered by controlling these springs. A shoe 57 regulates the working depth and keeps the direction. In working ridges this shoe is furnished with a cutter.

The cultivator 58, situated in the rear, is made in two portions, one with a right and the other with a left-handed spiral, allowing for earthing up or splitting the ridges. The machine can be used for all kinds of farm work; it will draw a plough or drive thrashing or other machines.

There is a special model for vineyard work; the constructional details are similar to those reproduced in figs. 4 and 5.

1112 – **Petrol Tractor for Drain Digging.** — PERKINS, FRANK, in *Engineering Record*, Vol. 47, N° 5, p. 134. New York, July 29, 1916.

Weight 15 tons; motor 60 H. P.; 2 caterpillars 30 in. wide allow the machine to operate on soft land where teams could not well be used. The tractor carries a drum 16 in. diameter by 24 in. long which can roll 1000 ft. of $^3/_4$ in. cable; paying-out speed: 10 to 14 ft. per minute. Mode of operation: the plough, which can dig a drain 2 feet wide and 3.5 feet deep, is attached to the tractor by the cable, the drum being- de-clutched, the tractor moves forward to the finishing point. The drum clutch is then let in and the cable wound up taut; the tractor is kept stationary by two anchors situated in front. The cable is wound in until the plough reaches the end of the drain. When it is desired to move forward the anchors are lifted. Travelling speed: 2 miles per hour.

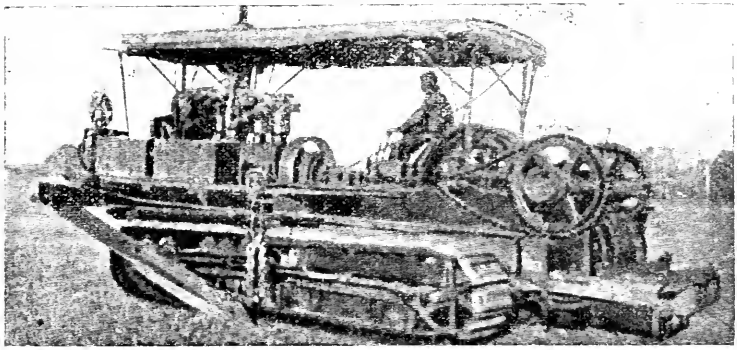

Petrol tractor for drain digging.

1113 – **Simple Steam Sterilizer for Farm Dairy Utensils.** — AYERS, HENRY, and TAYLOR, G. R., in *Farmers' Bulletin* 748. Washington, D. C., July 22, 1916.

The sterilizer consists of a roasting-pan A which, with its insulated cover B, forms the bottom of the box C, and is heated by a two-burner oil stove. (fig. 1).

The cover is made of galvanised iron ; the lower part is covered with asbestos and overlaps the ends of the plan. Instead of asbestos, paper com-

*Sterilizer for dairy utensils.*

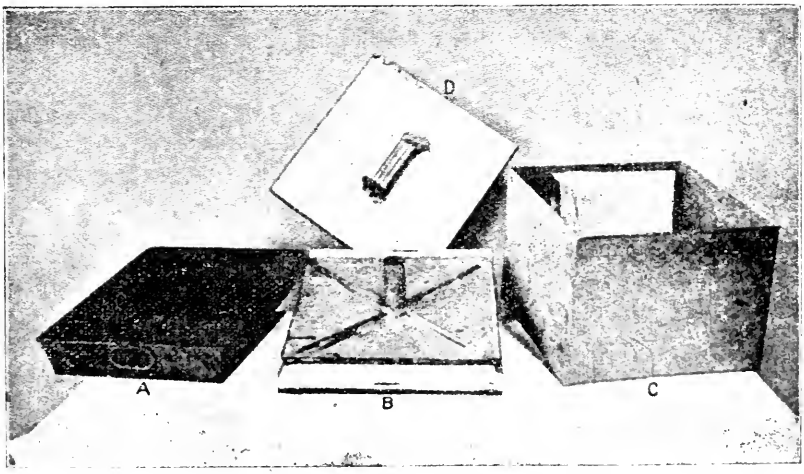


Fig. 1. — Parts for the sterilizer.

pletely enclosed in sheet iron may be used. A hole 1 ½ inches in diameter is made in the centre of the cover and a pipe soldered to it 4 ½ inches in

height. The diagonal strips on the cover B act as supports for the cans or other utensils to be sterilised.

*Method of Operation :* Fill the roasting pan with water to the depth of 1 inch. Heat until the steam coming from the end of the outlet pipe reaches a temperature of 205° F. Place the can to be sterilised, preferably enclosed in an insulating cover, upside down over the outlet and leave for

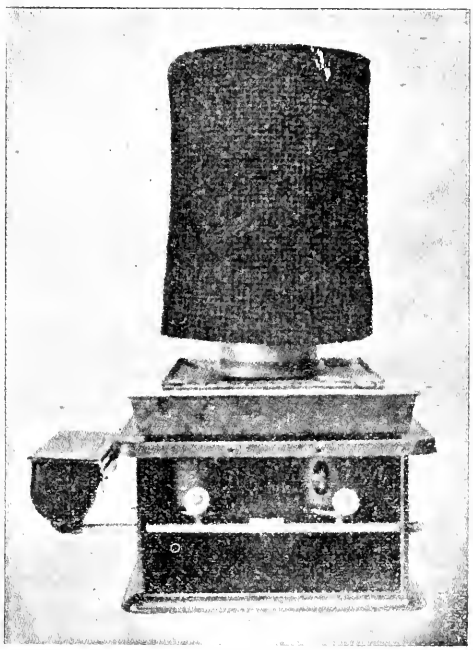

Fig. 2. — The sterilizer in action.

5 minutes, (fig. 2) then remove and place upright on the floor. The can should be absolutely dry in one or two minutes if the temperature has reached 205° F.

*Cost of Operation :* The two burners use one pint of paraffin per hour. Taking oil at 10 cents a gallon, the cost of sterilising three cans, with covers and strainers, is about 1 cent for 35 minutes operation. One inch of water in the roasting pan will furnish steam at 211° F. for about 50 minutes.

## RURAL ECONOMICS.

1114 – **Farm Management Practice of Chester County Pa., U. S. A.** – SPILLMAN, W. J., DIXON, H. M. and BILLINGS, G. A., in *United States Department of Agriculture Bulletin* N° 311, (Professional Paper), pp. 1-99. Washington, January, 17, 1916.

This report from the Office of Farm Management, United States Department of Agriculture, based on the analytical study of 643 farms in Ches-

ter County, Pa, is designed to work out a method of studying farm management in a particular district, to discover fundamental principles of farm management and to work out their application to the agriculture of the district.

The more important of the fundamental principles of farm management brought out clearly in this study, and amply confirming similar studies, are :

The type of farming followed in any given case must be adapted to local soil, climatic and labor conditions, and especially to local conditions with reference to markets and market facilities, as well as to the business conditions existing on the individual farm.

When the conditions affecting the agriculture of a region have remained stable for a considerable period local agricultural practice tends to become approximately what it should be for the best results, provided the practice which gives the best immediate returns does not unfavorably affect soil fertility. When conditions change, even slightly, if the change is permanent, local farm practice begins to change and ultimately adapts itself to the new conditions.

Success in farming, measured in terms of the family income and standard of living, is directly proportioned to the magnitude of the farm business. With the types of farming generally adapted to this locality many of the farms found in this survey are too small to permit a satisfactory standard of living.

In the matter of yield of crops per acre, the point of diminishing returns is reached on a considerable proportion of farms. Profits increase as yields increase until the yields are considerably above the average for the locality, but beyond this, increased yields are obtained at the expense of farm profits.

In quantity of product per dairy cow, the point of diminishing returns is not reached in ordinary farm practice. Hence, on dairy farms, quantity of product per cow is, on the average, a more important factor in success in farming than yield of crops per acre.

It is both easier and more profitable to increase low acre yields than high ones, and a small product per cow than a large one. In other words, profits can be increased more easily by attention to the weakest points in a system of farming. The more vital the weakness, the greater the increase in profits that can easily be made.

With a given type of farming, under given conditions, there is a certain way of dividing acreage among the several enterprises of the farm which is more profitable than any other way; that is, there is a most profitable acreage for each crop. Similarly there is a most profitable proportion of income from each source. If the acreage of any crop or the proportion of income from any enterprise be greater or less than this optimum, the profits of the farm as a whole are lowered thereby.

Certain enterprises may be distinctly profitable when occupying a minor position in the farm business and distinctly unprofitable if made major enterprises. This appears to be true of fruit growing in Chester County, and, to a less extent, of poultry keeping.

On small farms the expense of operation is much greater per unit of product than on large farms of similar type.

Diversity of the farm business is, a a rule, an important factor of success in farming. A medium degree of diversity, sufficient to give food, seasonal distribution of labor, complete utilization of land, and a considerable variety of sale products, is better than either extreme diversity or a low degree of diversity.

These general principles, applying to a wide region in the Middle Atlantic States, have led to important conclusions bearing on possible improvements in Chester County farming. The more important applications of the above principles to the agriculture of the district studied are given below.

The standard rotation of the section, viz. 1st year: corn— 2nd year: corn, potatoes and oats— 3rd year: wheat— 4th and 5th years: timothy and clover—should be changed to the following: 1st and 2nd years: corn— 3rd year: annual hay crop and potatoes— 4th year: wheat— 5th and 6th years: timothy and clover. Oats are unprofitable in this district.

The Chester County farmer should grow a little more corn than he needs for home use. The total hay area (including annual hay crop) should occupy between 40 and 50 per cent of the land under crops. It does not pay to buy hay in this districts, unless the cows are of the highest dairy type. Dairying should normally be the leading enterprise with about one cow to each 4 or 5 acres of cultivated land. The average return per cow for dairy produce is $80 and where the receipts per cow are less than $50 per annum, the larger the herd, the smaller the labour income. More heifer calves should be raised to replace old cows. Bullock fattening is not worth while, as a main line of business, except on large farms where labour is scarce. A few hogs should be fed for market but the district is unsuitable for sheep farming. As regards poultry, 100 to 150 hens are more profitable than larger or smaller flocks. Fruit and garden produce should be grown chiefly for home use. Potatoes probably occupy about their proper place in Chester County farming.

Yields per acre can profitably be increased up to about 40 per cent above the average: beyond this the labour income falls off. The latter increases with the size of the farm, but with small farms of under 40 acres, the income is too low to maintain a good standard of living.

Farms where "diversity" is about the average for the section are usually more profitable than those where farming is either more or less diverse than the average.

The following brief description will serve to show the methods used to collect and classify the data forming the basis of the present study. Chester County was chosen for these reasons: The soils of the area are extremely uniform in character, thus giving uniformity to the farm practice of the district and permitting comparison to be made without the disturbing element of variations in type of soil; the district has long since passed the stage of pioneer farming, so that the forces which control the type of farming have had sufficient time to assert themselves and produce a highly stable agri-

culture, which now changes only when economic or other conditions change. The local agriculture therefore lends itself admirably to a study of the fundamental principles of farm organisation.

This report, relating to the period March 1, 1911 to March 1, 1912, includes as has been stated above, the analytical study of 643 farms. For each of these a valuation has been made of all farm property ; the proportion of capital invested in land, buildings, live stock, implements and machinery, supplies and cash for current expenses ; the source of income and the amount from each ; the value and amount of expenditures ; and numerous other items bearing on profit in farming.

Besides this general study of each farm a full account is given of the geography, topography, geology and drainage systems of the district. Further the agricultural history of the area is surveyed, principally since 1840, when the decennial census of live stock was begun as part of the Government scheme of agricultural statistics. Table I gives some idea of the profound changes that occurred in eastern agriculture during the decade 1840 - 50. About this time there was an enormous extension of agriculture in Ohio and the Mississippi Valleys. Later, about 1870, the city of Philadelphia began to exert its influence on the local farming, and, with the increasing town populations of the neighbourhood, the dairy side of the industry became dominant.

TABLE I. — *Census data showing changes in the agriculture of Chester County.*

| Live stock and crops | 1840 | 1850 | 1860 | 1870 | 1880 | 1890 | 1900 | 1910 |
|---|---|---|---|---|---|---|---|---|
| Dairy cows | 16 000 | 19 604 | 25 900 | 32 700 | 42 400 | 49 300 | 45 700 | 45 400 |
| Other cattle | 45 000 | 35 500 | 29 900 | 21 100 | 18 400 | 12 000 | 21 700 | 19 700 |
| Swine | 64 500 | 36 600 | 31 500 | 28 200 | 34 000 | 35 600 | 30 500 | 21 400 |
| Sheep | 56 700 | 13 400 | 11 700 | 13 100 | 15 100 | 11 200 | 9 900 | 5 300 |
| Milk sold (thousands of gallons) | — | — | — | 1 598 | 5 759 | 24 000 | 17 038 | 20 206 |
| Butter produced (thousands of pounds) | — | 2 092 | 2 730 | 2 848 | 4 247 | 1 628 | 1 314 | 573 |
| Wheat (thousands of bushels) | 438 | 547 | 801 | 754 | 775 | 882 | 785 | 928 |
| Barley thousands of bushels) | 45 | 2 | 5 | 1.6 | 0.9 | 0.2 | 0.2 | 01.2 |
| Oats (thousands of bushels) | 1 080 | 1 146 | 1 227 | 1 034 | 1 137 | 868 | 925 | 777 |
| Rye (thousands of bushels) | 86 | 52 | 32 | 12 | 20 | 19 | 22 | 27 |
| Corn (thousands of bushels) | 826 | 1 339 | 1 590 | 1 540 | 1 965 | 1 959 | 2 687 | 1 882 |
| Hay and forage (thousands of tons) | 78 | 96 | 94 | 115 | 126 | 162 | 131 | 142 |

In order to make the comparisons on which the bulletin is based of real value, it was necessary to limit the work to the 378 farms on which the farmer himself took a man's part in the work of the farm. This involved the rejection of : 16 farms owned and managed by women who did none of the farm work ; 24 farms run by paid managers ; 27 farms devoted wholly

TABLE II. — *Utilisation of land and value of real estate.*

| Sizes of farms in acres | Number of farms | Average size | Tillable area | Crop area | Tillable pasture | Other pasture | Wood-land | Waste land | Value of real estate per acre | Pasture[1] |
|---|---|---|---|---|---|---|---|---|---|---|
| | | Acres | % | % | % | % | % | % | $ | % |
| 13 to 40 . | 54 | 28 | 75 | 67 | 8 | 9 | 5 | 11 | 123 | 21 |
| 41 to 60 . | 61 | 52 | 72 | 62 | 10 | 10 | 8 | 10 | 94 | 24 |
| 61 to 80 . | 60 | 73 | 72 | 63 | 9 | 11 | 7 | 10 | 94 | 24 |
| 81 to 100 . | 68 | 93 | 71 | 62 | 9 | 10 | 10 | 9 | 91 | 23 |
| 101 to 120 . | 52 | 110 | 71 | 60 | 10 | 12 | 8 | 10 | 86 | 27 |
| 121 to 160 . | 61 | 136 | 66 | 58 | 7 | 13 | 11 | 11 | 84 | 26 |
| 161 to 393 . | 22 | 203 | 73 | 58 | 14 | 10 | 11 | 7 | 87 | 29 |
| All sizes . . . | 378 | 90 | 71 | 61 | 10 | 11 | 9 | 9 | 90 | 25 |

(1) Per cent pasture is of total crop and pasture area.

TABLE III. — *Distribution of crops.*

| Acre groups | 13 to 40 | 41 to 60 | 61 to 80 | 81 to 100 | 101 to 120 | 121 to 160 | Over 160 | All farms |
|---|---|---|---|---|---|---|---|---|
| Number of farms . . . . . | 54 | 61 | 60 | 68 | 52 | 61 | 22 | 378 |
| Corn . . . . . | 23.7 | 22.1 | 20.5 | 19.6 | 20.4 | 18.2 | 18.3 | 19.8 |
| Silage . . . . . | 0.6 | 0.2 | 1.3 | 2.0 | 3.0 | 2.8 | 5.7 | 2.5 |
| Total corn . . . | **24.3** | **22.3** | **21.8** | **21.6** | **23.4** | **21.0** | **24.0** | **22.3** |
| Potatoes . . . . . | 7.9 | 8.5 | 5.8 | 6.8 | 5.9 | 4.9 | 4.9 | 6.0 |
| Wheat . . . . . | 17.4 | 18.9 | 19.5 | 18.3 | 17.6 | 18.3 | 16.9 | 18.2 |
| Oats . . . . . | 4.8 | 5.3 | 6.3 | 6.7 | 6.1 | 6.4 | 7.5 | 6.4 |
| Hay . . . . . | 39.9 | 40.2 | 44.3 | 43.8 | 42.7 | 47.2 | 44.6 | 44.0 |
| Fruit . . . . . | 3.7 | 3.0 | 2.2 | 2.3 | 3.8 | 1.9 | 1.5 | 2.5 |
| Truck . . . . . | 1.5 | 1.4 | 0.1 | 0.1 | 0.2 | 0.1 | 0.3 | 0.3 |
| Special (*a*) . . . . . | — | 0.2 | — | — | — | — | — | — |
| Miscellaneous (*b*) . . . . | 0.5 | 0.2 | — | 0.4 | 0.3 | 0.2 | 0.3 | 0.3 |
| Total . . . | **100.0** | **100.0** | **100.0** | **100.0** | **100.0** | **100.0** | **100.0** | **100.0** |

(*a*) Tobacco. — (*b*) Millet, rye, etc.

to hot-house business, mainly mushrooms ; also 57 tenants paid cash rent, 75 a half-share, and 14 who furnished only labour and received ⅓ of the farm produce. Other records were incomplete and were discarded.

The uniformity desirable in a study of this kind is maintained in the 378 farms dealt with in Tables II, III, IV, and V, where they are divided into 7 classes according to their size.

TABLE IV. — *Animal units* per* 100 *acres of crops.*

| Kind of live stock | Size of farms in acres | | | | | | | All farms |
|---|---|---|---|---|---|---|---|---|
| | 40 or less | 41 to 60 | 61 to 80 | 80 to 100 | 101 to 120 | 121 to 160 | Over 160 | |
| Dairy cows | 20.3 | 21.2 | 19.1 | 19.7 | 23.2 | 19.2 | 18.4 | 20.4 |
| Beef cows | 0.5 | 0.3 | 0.8 | 0.5 | — | — | — | 0.3 |
| Young cattle | 1.6 | 2.3 | 2.0 | 2.3 | 2.3 | 2.4 | 2.6 | 2.4 |
| Bulls (*a*) | 0.1 | 0.4 | 0.4 | 0.6 | 0.8 | 0.7 | 0.8 | 0.5 |
| Steers | 0.1 | 0.3 | 2.3 | 0.5 | — | 0.8 | 4.6 | 1.2 |
| Horses | 11.2 | 8.9 | 7.7 | 7.2 | 6.8 | 6.2 | 6.3 | 7.2 |
| Colts (*a*) | 0.1 | 0.3 | 0.5 | 0.4 | 0.1 | 0.7 | 0.6 | 0.4 |
| Sheep | — | 0.1 | 0.1 | 0.2 | 0.8 | 0.4 | 0.7 | 0.4 |
| Hogs | 1.6 | 0.9 | 0.4 | 0.9 | 0.9 | 2.0 | 1.2 | 1.1 |
| Poultry | 4.5 | 2.7 | 2.5 | 2.1 | 1.5 | 1.4 | 0.7 | 2.0 |

*a* Number of animals per farm.

* One animal unit equals one or other of the following groups of animals, which consume equivalent amounts of food: 1 adult horse — 1 dairy cow — 2 young cattle — 5 pigs — 7 sheep — 100 poultry.

The writers have especially endeavoured to find out how the system of arming and the method of valuing the produce, affects the labour income (1) of the farmer. Thus the farms have been divided into different classes, according to the percentage of their total area devoted to each type of crop, and also according to the total cash receipts derived from each crop and the different branches of animal production. For each of these classes an " adjusted labour income " has been determined. This index has been chosen rather than the actual labour income of the farmer, so as to eliminate the size of the farm as far as possible. The farms, divided according to area, have each been assigned as an index for labour income, the percen-

(1) The labour income of the farmer is what remains of the gross profit after deducting all expenses and interest on capital at 5 per cent. The labour of the farmer's family is reckoned among the expenses at the equivalent wages. Produce consumed by the farmer's family is not included. (*Ed.*).

tage relation of the income actually realised to the average or normal income of the class to which the farm belongs. Thus if the normal income is called, 100 for each class, the index varies as a function of the factors which can, in their turn, be isolated and studied according to the method described below. Table VI, for instance, gives only the detailed figures for corn (maize). Here are set out the limits, for the district studied, between which the adjusted labour income of the farmer varies, as a percentage of the total area under this crop, and as a percentage of the total cash receipts derived from the sale of corn, beyond that fed to stock on the farm.

TABLE V. — *Distribution of receipts.*

| Size of farms in acres | 13 to 40 | 41 to 60 | 61 to 80 | 81 to 100 | 101 to 120 | 121 to 160 | Over 160 | All farms |
|---|---|---|---|---|---|---|---|---|
| Number of farms | 54 | 61 | 60 | 68 | 52 | 61 | 22 | 378 |
| | % | % | % | % | % | % | % | % |
| Source of income: | | | | | | | | |
| Dairy products | 28.9 | 33.1 | 35.9 | 38.0 | 48.1 | 39.5 | 40.5 | 39.1 |
| Dairy cattle | 4.9 | 6.4 | 5.8 | 5.7 | 3.3 | 4.8 | 4.4 | 5.0 |
| Beef cattle | 0.2 | 0.1 | 2.5 | 0.8 | — | 1.8 | 4.8 | 1.5 |
| Horses | 0.1 | 0.3 | 1.4 | 0.1 | 0.2 | 0.5 | 0.3 | 0.4 |
| Hogs | 4.5 | 2.8 | 1.2 | 2.8 | 2.6 | 3.8 | 2.3 | 2.8 |
| Sheep and wool | — | 0.1 | 0.1 | 0.3 | 0.9 | 0.4 | 1.1 | 0.5 |
| Poultry and eggs | 18.7 | 11.6 | 11.7 | 8.5 | 6.0 | 6.4 | 3.3 | 8.2 |
| Corn | 1.2 | 2.5 | 2.5 | 2.1 | 2.3 | 2.2 | 3.1 | 2.3 |
| Potatoes | 9.3 | 12.4 | 8.6 | 11.0 | 8.2 | 6.9 | 7.5 | 8.9 |
| Wheat | 5.8 | 8.2 | 9.4 | 8.4 | 8.5 | 9.0 | 8.0 | 8.5 |
| Oats | 0.2 | 0.2 | 0.2 | 0.1 | 0.1 | 0.2 | 0.3 | 0.2 |
| Hay | 9.6 | 10.0 | 13.4 | 13.6 | 12.4 | 18.4 | 16.9 | 14.3 |
| Fruit | 1.4 | 1.3 | 1.0 | 1.0 | 0.6 | 0.2 | 0.2 | 0.7 |
| Truck | 3.0 | 1.8 | 0.1 | 0.1 | 0.2 | (*d*) | 0.4 | 0.5 |
| Special (*a*) | 0.7 | 0.7 | — | — | — | — | — | 0.1 |
| Miscellaneous (*b*) | 5.1 | 4.2 | 3.1 | 3.9 | 1.7 | 1.9 | 2.7 | 2.9 |
| Feed and supplies (*c*) | 6.4 | 4.3 | 3.1 | 3.6 | 4.9 | 4.0 | 4.2 | 4.1 |

*a*) Sweet peas, 1 farm; tobacco, 1 farm. — *b*) Miscellaneous crops (rye, millet, straw, etc.), labor, lumber, or wood sold, etc. — *c*) Increase in inventory. — *d*) Less than 0.05 per cent.

The practical conclusions drawn from these statistical data have been given already. It will be sufficient to note the fact that the course followed by the most able farmers is fully justified. They have increased their corn production to suit the changed economic conditions, while the majority of their fellows lag behind and continue to grow corn chiefly for consumption on the farm.

TABLE VI. — *Relation of corn to crop area and labour income.*

| Per cent of crop area in corn | 0 to 19 | 20 to 29 | 30 to 39 | 40 + |
|---|---|---|---|---|
| Number of farms | 138 | 188 | 42 | 10 |
| Adjusted labor income | 94 | 102 | 121 | 52 |

Average percentage of corn area on the 378 farms, 22.3.

| Per cent of income from sale of corn | None | 1 to 19 | 20 + |
|---|---|---|---|
| Number of farms | 251 | 121 | 6 |
| Adjusted labour income | 95 | 113 | 55 |

The average labour income for farms classified according to size is set out in Table VII. This also shows the number of farmers in each class who reached an income of $1000 or more.

TABLE VII. — *Relation of size of farm to labour income.*

| Size of farms, in acres | Number of farms | Average size | Average labour income | % of farms with labour income $1,000 or more |
|---|---|---|---|---|
| | | Acres | | |
| 13 to 40 | 54 | 28 | $240 | 6 |
| 41 to 60 | 61 | 52 | 550 | 10 |
| 61 to 80 | 60 | 73 | 730 | 25 |
| 81 to 100 | 68 | 93 | 848 | 34 |
| 101 to 120 | 52 | 110 | 957 | 46 |
| 121 to 160 | 61 | 136 | 1 094 | 46 |
| 161 to 393 | 22 | 203 | 1 575 | 68 |
| Average | 378 | 90 | 789 | 30 |

Study of the relation of size of farm to efficient use of labour and working capital has led to the collection of data given in Table VII. These are interesting both on their own account and because they explain the results shown in Table VII.

TABLE VIII. — *Relation of size of farm to efficiency.*

| Sizes of farms, in acres | Number of farms | Productive work units per farms | | Crop acres per man | Man labour per crop acre | Value of labour per month per man | Crop acres per work horse | Work horses per man | Value of machinery per crop acre | Ratio of cost of buildings to farm income | |
|---|---|---|---|---|---|---|---|---|---|---|---|
| | | Man | Horse | | | | | | | Dwelling | Other buildings |
| 13 to 40 . . | 54 | 184 | 82 | 13.7 | $20.74 | $23.93 | 9.0 | 1.5 | $15,11 | 3.41 | 2.78 |
| 41 to 60 . . | 61 | 299 | 140 | 20.2 | 15.78 | 26.60 | 11.9 | 1.7 | 12.57 | 2.19 | 1.91 |
| 61 to 80 . . | 60 | 372 | 177 | 23.2 | 13.98 | 27.12 | 13.9 | 1.7 | 11.92 | 1.88 | 1.89 |
| 81 to 100 . | 68 | 475 | 226 | 25.2 | 13.46 | 28.30 | 14.5 | 1.7 | 10.79 | 1.76 | 2.03 |
| 101 to 120 . | 52 | 551 | 259 | 25.6 | 13.64 | 29.22 | 15.0 | 1.6 | 11.80 | 1.83 | 1.92 |
| 121 to 160 . | 61 | 582 | 286 | 29.0 | 11.80 | 28.50 | 16.8 | 1.7 | 9.20 | 1.62 | 1.83 |
| 160 + . . . | 22 | 856 | 444 | 31.1 | 13.05 | 33.77 | 17.4 | 1.8 | 8.94 | 1.68 | 1.91 |
| All sizes . | 378 | 439 | 211 | 27.7 | 13.69 | 28.27 | 14.7 | 1.7 | 10.88 | 1.88 | 1.96 |

The relation of the labour income to the number of days' work for men and horses for farms divided into four groups based on the number of man-work units (productive days' work per farm) is recorded in Table IX.

TABLE IX. — *Relation of units of work to labour income.*

| Man work units per farm | Number of farms | Man work units per farm | Horse work units per farm | Average size of farm | Labour income | Adjusted income |
|---|---|---|---|---|---|---|
| | | | | Acres | $ | Per cent |
| 300 and less . . . . . | 117 | 211 | 111 | 49 | 836 | 78 |
| 301 to 500 . . . . . | 129 | 395 | 198 | 88 | 703 | 94 |
| 501 to 700 . . . . . | 89 | 588 | 278 | 116 | 1 083 | 112 |
| 701 and over . . . . . | 43 | 878 | 378 | 151 | 1 668 | 152 |
| Average . . . | 378 | 439 | 211 | 90 | 789 | 100 |

Table X brings out a point of special interest. The small farmer cannot afford an adequate equipment of labour-saving machinery, and the

relative expense of implements is greater because of the smaller use that can be made of them.

TABLE X. — *Relation of size of farm to use of machines.*

| Size of farms . . . . . acres | 60 and less | 61 to 100 | 101 to 160 | Over 160 | All farms |
|---|---|---|---|---|---|
| Number of farms . . . . . | 115 | 128 | 113 | 22 | 378 |
| Items of equipment (1) . . . . . | Per cent of farms reporting | Per cent of farms reporting | Per cent of farms reporting | Per cent of farms reporting | Per cent of farms reporting |
| Disk harrow . . . . . | 22 | 27 | 39 | 64 | 31 |
| Roller . . . . . | 78 | 91 | 94 | 96 | 88 |
| Corn planter . . . . . | 43 | 63 | 74 | 82 | 61 |
| Grain binder . . . . . | 31 | 70 | 84 | 86 | 63 |
| Grain drill . . . . . | 49 | 74 | 90 | 96 | 73 |
| Hay loader . . . . . | — | 5 | 23 | 27 | 10 |
| Hay tedder . . . . . | 51 | 69 | 81 | 86 | 68 |
| Manure spreader . . . . . | 36 | 65 | 82 | 100 | 63 |
| Silo . . . . . | 3 | 12 | 24 | 45 | 15 |
| Ensilage cutter and feed grinder . | 26 | 44 | 50 | 64 | 42 |
| Engines . . . . . | 23 | 38 | 50 | 64 | 38 |
| Cream separator . . . . . | 16 | 9 | 10 | 5 | 11 |

(1) Practically all farms reported wagons, buggies, plows, harrows, mowers, rakes, cultivators, and harness.

With regard to the relation of yield per acre to the size of farm, it is important to note that the yields on the small farms are no greater than on the large. There appears to be very little relation, on the farms in this district at least, between the size of farm and yield per acre for any kind of crop.

On the other hand, there is a very distinct relation between the yield per acre and the labour income. The writers make this point clear by tabulating the adjusted labour incomes of the farms in the district divided according to the "crop index" of the group to which each farm belongs. Thus, if the *average* quantities of different crops, a, b, c... are produced on a total area $x$, and if on a particular farm it is necessary to devote to the production of the same quantities an area $y$, then the "crop index" for that farm is given by $x/y$.

In Table XI the farms are divided according to the crop index of each farm. It is evident that good yields (crop index 100-140) are more profitable than very high yields and much more profitable than very small yields.

TABLE XI. — *Relation of crop index to labour income.*

| Crop index | Number of farms | Average labour income | Average adjusted income | Average size of farms |
|---|---|---|---|---|
| | | | % | Acres |
| 84 and less | 75 | 360 | 49 | 89 |
| 85 to 99 | 91 | 616 | 74 | 90 |
| 100 to 114 | 107 | 870 | 108 | 89 |
| 115 to 139 | 92 | 1 183 | 153 | 91 |
| 140 and over | 13 | 1 005 | 130 | 82 |
| Total | 378 | 789 | 100 | 90 |

TABLE XII.

| Divided according to receipts per cow | Number of farms | Receipts per cow | Adjusted income | Labour income |
|---|---|---|---|---|
| | | | % | |
| 50 and less | 48 | $42 | 55 | $418 |
| 51 to 60 | 43 | 63 | 102 | 592 |
| 61 to 70 | 27 | 57 | 92 | 783 |
| 71 to 80 | 51 | 75 | 99 | 782 |
| 81 to 90 | 24 | 86 | 111 | 831 |
| 91 to 100 | 39 | 96 | 137 | 1 185 |
| 101 to 120 | 29 | 110 | 162 | 1 422 |
| Over 120 | 28 | 138 | 175 | 1 602 |
| Total | 289 | 80 | 111 | 906 |

TABLE XIII.

| Diversity index | Number of farms | Average labour income | Average adjusted income | Average size of farms |
|---|---|---|---|---|
| | | | % | |
| Less than 1 to 2.9 | 79 | $663 | 82 | 83 |
| 3 to 3.9 | 107 | 718 | 90 | 90 |
| 4 to 4.9 | 125 | 888 | 114 | 94 |
| 5 and over | 67 | 866 | 112 | 90 |
| Total | 378 | 789 | 100 | 90 |

TABLE XIV. — *Distribution of farm expenses.*

| | Acres | | | | | | | Total owner farms | Special farms | Total for tenant farms | Landlord's expenses | Cash-rent tenant | Share-rent tenant |
|---|---|---|---|---|---|---|---|---|---|---|---|---|---|
| | 40 and less | 41 to 60 | 61 to 80 | 81 to 100 | 101 to 120 | 121 to 160 | Over 160 | | | | | | |
| Number of farms | 54 | 61 | 60 | 68 | 52 | 61 | 22 | 378 | 27 | 124 | 124 | 53 | 71 |
| | % | % | % | % | % | % | % | % | % | % | % | % | % |
| Paid labour | 13.0 | 15.4 | 24.4 | 28.5 | 24.6 | 30.7 | 36.1 | 26.8 | 37.4 | 23.5 | 1.2 | 19.3 | 35.0 |
| Board, paid labour | 4.2 | 4.6 | 6.1 | 7.1 | 5.8 | 6.0 | 3.5 | 5.6 | 3.6 | 5.6 | 0.1 | 4.3 | 8.8 |
| Family labour | 16.4 | 16.2 | 10.1 | 7.7 | 12.9 | 6.9 | 5.0 | 9.6 | 4.1 | 9.4 | 1.5 | 6.4 | 15.1 |
| Machinery repairs | 1.5 | 2.3 | 1.4 | 1.6 | 2.0 | 1.3 | 1.6 | 1.6 | 1.3 | 1.6 | 0.7 | 1.2 | 2.0 |
| Building repairs | 2.7 | 1.9 | 1.2 | 1.2 | 1.2 | 1.2 | 0.1 | 1.8 | 0.7 | 1.8 | 3.6 | 1.8 | 0.2 |
| Fence repairs | 1.4 | 1.1 | 0.9 | 0.8 | 1.4 | 0.8 | 0.7 | 1.0 | 1.0 | 1.3 | 4.3 | 0.2 | 0.2 |
| Drain repairs | — | 0.1 | — | 0.1 | — | — | 0.2 | 0.1 | — | — | 0.1 | — | — |
| Feed, silage, etc. | 1.1 | 0.7 | 1.1 | 0.6 | 1.1 | 0.6 | 1.7 | 0.9 | 0.1 | 0.9 | 0.8 | 1.1 | 0.4 |
| Feed, grain, etc. | 24.7 | 19.0 | 18.1 | 17.5 | 19.7 | 16.0 | 21.3 | 18.7 | 7.6 | 22.0 | 26.7 | 18.4 | 16.1 |
| Feed grinding | 1.6 | 1.8 | 1.4 | 1.5 | 1.1 | 1.3 | 1.1 | 1.3 | 0.3 | 1.5 | 1.8 | 1.1 | 1.4 |
| Ice and milk haul | — | — | 0.6 | — | 1.0 | 0.3 | — | 0.3 | — | — | — | (*a*) | (*a*) |
| Horseshoeing | 2.7 | 2.9 | 2.5 | 2.3 | 2.0 | 2.0 | 1.3 | 2.1 | 1.1 | 2.4 | 0.9 | 1.8 | 3.2 |
| Breeding fees, vet | 0.9 | 0.7 | 0.8 | 0.7 | 0.7 | 0.7 | 0.7 | 0.8 | 0.7 | 0.9 | 0.6 | 0.9 | 0.6 |
| Seeds, plants, etc. | 3.9 | 5.8 | 4.3 | 5.1 | 3.4 | 4.5 | 3.6 | 4.3 | 2.2 | 3.9 | 6.8 | 2.6 | 2.5 |
| Fertilizer | 11.3 | 13.1 | 13.5 | 12.0 | 11.4 | 13.0 | 11.3 | 12.3 | 20.8 | 11.2 | 20.1 | 7.8 | 6.1 |
| Spray material | 0.1 | 0.1 | — | 0.1 | 0.1 | — | — | — | 0.1 | — | 0.1 | (*a*) | 0.1 |
| Twine | 0.2 | 0.4 | 0.4 | 0.4 | 0.3 | 0.4 | 0.3 | 0.4 | 0.1 | 0.4 | 0.2 | 0.3 | 0.4 |
| Thrashing | 1.4 | 1.4 | 1.6 | 1.4 | 1.2 | 1.5 | 1.3 | 1.4 | 0.4 | 1.4 | 1.4 | 0.9 | 1.4 |
| Pressing | 1.0 | 1.7 | 2.0 | 1.8 | 1.8 | 2.5 | 2.1 | 2.0 | 0.8 | 1.6 | 1.8 | 1.0 | 1.6 |
| Machine hire | 0.5 | 0.6 | 0.3 | 0.3 | 0.3 | 0.2 | — | 0.2 | 0.1 | 0.3 | 0.1 | 0.3 | 0.2 |
| Fuel, oil, barrels, etc. | 0.5 | 0.6 | 0.6 | 0.7 | 0.7 | 0.7 | 0.6 | 0.7 | 0.6 | 0.6 | 0.5 | 0.5 | 0.7 |
| Insurance | 2.7 | 2.1 | 1.9 | 1.8 | 1.6 | 1.9 | 1.9 | 1.9 | 1.2 | 2.2 | 6.0 | 0.7 | 0.9 |
| Taxes | 8.0 | 7.3 | 6.8 | 6.7 | 5.8 | 7.4 | 5.6 | 6.7 | 3.3 | 7.3 | 20.2 | 2.5 | 2.0 |
| Miscellaneous | 0.2 | 0.2 | — | 0.1 | — | 0.1 | — | 0.1 | 0.1 | 0.2 | 0.5 | (*a* | 0.2 |
| Mushroom spawn | — | — | — | — | — | — | — | — | 0.4 | — | — | — | — |
| Cash rent | — | — | — | — | — | — | — | — | — | — | — | 26.9 | — |
| Total | 100.0 | 100.0 | 100.0 | 100.0 | 100.0 | 100.0 | 100.0 | 100.0 | 100.0 | 100.0 | 100.0 | 1.000 | 100.0 |

*a*) Less than one-tenth of 1 per cent.

The relation of the receipts per cow to the labour income is of the first importance in a district devoted to dairy farming and this is set out in Table XII. No farmer in this district went to too great an expense to obtain a high yield of milk per cow.

In a similar way the labour income has been studied in relation to the combined effect of crop index and receipts per cow, the efficiency of farm labour and the " diversity index " of the farm. The last term requires some explanation ; it might also be called the " specialisation index ". To find this index : Take the sum of the costs for each branch, divide the cost of each branch by this sum, square each quotient, and divide unity by the sum of these squares. The relation of diversity index to labour income is given in Table XIII.

Table XIV shows in detail the nature and relative amount of expenditure for various purposes on farms of different sizes, on special farms, on cash-rent farms and on farms run on a share basis.

The writers have calculated also : the feeding cost per animal unit — the area under cereals, hay and pasture per animal unit — the amount of silage made and fed per head of cattle, divided according to the amount of stock on each farm — the rate of depreciation of dairy cows and farm horses — the value of farmyard manure per animal unit. These are the chief points in the complete analytical study which includes fifty tables of numerical data.

1115 – **Study of a Small Holding at Kirberg, District of Wiesbaden, Germany.**— BENDER, EMILE, in *Illustrierte Landwirtschaftliche Zeitung*, 35th. year, Nos. 99 and 100 Berlin, December 11 and 15, 1915.

INTRODUCTION. — Taking as basis the classification of agricultural holdings adopted by the Imperial Bureau of Statistics (1), small and medium holdings occupy 81 per cent of agricultural land in the district of Wiesbaden. In all Prussia the Wiesbaden figure is only surpassed by the district of Lunebourg, with 86 per cent of its area in small and medium holdings. But if we compare the number of holdings improved by the owners, whose chief occupation is agriculture, the district of Wiesbaden takes the lead with 182 holdings per 2471 acres (1000 ha.), with the exception of the district of Coblence. Nassau, district of Wiesbaden, is clearly a typical country of small and medium proprietors as well as of small and medium holdings.

*Situation, Climate, Extent and Distribution.* -- The holding studied lies in the old market town of Kirgberg, near Limburg, 7.5 miles from the county town and 47 miles from the railway station at Niederbrechen. The climate is temperate ; altitude varies from 574 to 984 feet. The country is slightly undulating and includes about 1000 acres of public woodland and 2 220 acres of arable fields and meadows (meadows : 10 per cent), of which about 370 acres are estate (Domänen) and 216 acres are in trust (Fidei-Kommis, or land let out in plots of 6.2 to 9.3 acres). The areas of the

(1) Small holdings : less than 5 acres. Medium holdings 5 to 250 acres. Large holdings : over 250 acres.

holding in the township are fairly uniform, ranging from 6.2 to 37 acres only.

The holding taken as a type has an area of 31.66 acres divided as follows:

| | | |
|---|---|---|
| Arable . . . . . | 28.37 acres | 89.6 per cent |
| Pasture . . . . . | 3.29 " | 10.4 " " |

The arable land is divided into 45 plots, varying in size from 0.31 to 1.54 acres. These are cultivated on the three course rotation, usual in this district.

*Cultivation.* — Rye follows potatoes or fodder-beets; in 1914, the year to which the report refers, it occupied 6.0 acres.

Wheat follows clover and beets (harvested late) on 2.74 acres. Before sowing, the grain is treated with 2 per cent solution of copper sulphate. An area of 0.90 acres, also sown with corn, had to be resown to oats, as the wheat was damaged by crows and mice.

The stubbles are turned in by surface ploughing, followed by the harrow. In autumn harrowing and deep ploughing is done, then, in spring, another harrowing preceds the drill The amounts of seed used are as follows:

| | bushels per acre | area sown |
|---|---|---|
| Oats " Beseler II " . . . . . | 2.5-3.2 | 5.06 acres |
| " " Lochow Gelbhafer " . . . . | 2.3-2.5 | 1.80 " |
| Barley mixed with clover . . . . . | — | 2.53 " |
| " without clover . . . . . | — | 0.35 " |

The barley most grown is Goldthorpe; on poor soils the earlier sort Schwanenhals has been tried. The barley is used as fodder on the holding, a small amount only being sold to the brewery.

Clover occupied, in 1914, 3.0 acres and potatoes 3.8 acres. For the latter the preliminary cultivation of the soil is very thorough. Stubble is turned in and dung ploughed under, followed by light harrowing. In autumn deep ploughing and in spring the Cambridge-roller and the harrow are used, and lastly the furrows are made with the ridge-plough. After setting, the furrows are closed by the ridge-plough then, according to circumstances, comes the roller, the Cambridge-roller or the harrow. Later the horse-hoe and hand weeding are employed between the rows and finally the ridge-plough is used again.

Modrows Industry is the potato most favoured and, as early varieties, the following are grown in turn: Kaiser Krone, Gelbe Zwickauer, Ella and Royal Kidney.

In 1914, 2.5 acres were devoted to beets following oats. The soil is prepared in the same way as for potatoes, the seeds are either sown at 10 inches apart then planted out at the end of May or sown direct with the drill. For some years past, sorts specially selected for yield have been used, no-

tably Leutewitzer for sowings intended to be replanted and Eckendorf for sowing direct.

*Manure.* — The abundant stock supplies plenty of dung and liquid manure as much concentrated food is bought and the manure is carefully stored. The latter is only applied to the roots at the rate of 20 tons per acre. Potatoes get besides 268 lbs. of " A. S. 7×9" (ammonium superphosphate giving 7 % ammoniacal nitrogen and 9 % water soluble phosphoric acid) with 134 lbs. of potash salt.

Beets receive the same manure, plus 8000 to 9000 galls. of liquid manure and 268 lbs. of kainit per acre ; while rye has 268 lbs. of " A. S. 7 × 9 " 535 lbs. of basic slag, and 9.000 galls. of liquid manure. Wheat is not manured after clover ; after beets, 535 lbs. of basic slag followed by 71 lbs. of nitrate of soda in spring. Oats are given 268 to 357 lbs. of " A. S. 7×9 " and, on poor land, a little liquid manure. Barley mixed with clover receives 535 lbs. of slag and 357 lbs. of kainit per acre ; pastures are manured in a similar way.

The soil has been examined by the Weileburg School of Agriculture and found to be very deficient in lime. Potash salts are not much used in the district, yet they are very effective as shown by the following experiment made in 1911 :

| Manure (plots of 0.62 acre) | Yield of beets |
|---|---|
| 12.3 tons of dung + 2,200 galls. of liquid manure + 110 lbs. of super . . . . . | 15.06 tons |
| 12.3 tons of dung + 2,200 galls. of liquid manure + 110 lbs. of super + 330 lbs. of kainit . . . . . | 18.06 " |

The beets from the plot dressed with kainit kept much better than those from the other plot.

*Yields.* — The following Table gives the yields from 1896 to 1913.

*Average yields per acre.*

| Year | Rye (Bushels) | | Wheat (Bushels) | | Oats (Bushels) | | | Barley (Bushels) | | Potatoes (Tons) | | | | | | | Hay (Tons) |
|---|---|---|---|---|---|---|---|---|---|---|---|---|---|---|---|---|---|
| | Old local rye | Petkuser | Molds red prolific since 1902 | Square head | Heines Ertrag reichster | Beseler II | von Lochows Gelbhafer | Old local barley | Goldthorpe | Magnum Bonum | Up to date | Sass | Cimbals Neue Export | Professor Wohltmann | Industrie | Précoce | Meadow hay 1st and 2nd crops (drained since 1905) |
| Average 1896-1905 | 37.2 | — | 33.3 | — | 56.3 | — | — | 30.3 | — | 6.65 | — | — | — | — | — | — | 2.41 |
| 1906 . . . . . | 43.6 | — | 34.0 | — | 43.3 | — | — | 35.0 | — | 5.97 | — | — | — | — | — | — | — |
| 1907 . . . . . | 39.6 | — | 33.7 | — | 55.2 | — | — | 39.2 | — | 3.38 | — | 7.40 | 6.45 | — | — | 4.62 | 3.53 |
| 1908 . . . . . | 34.0 | — | 31.4 | — | 59.9 | 68.8 | — | 37.0 | — | — | 7.80 | 6.29 | 8.92 | 6.37 | — | 4.94 | 3.74 |
| 1909 . . . . . | 39.0 | 48.9 | 34.6 | 36.1 | — | 70.1 | — | — | 53.2 | — | 9.32 | — | 9.87 | 5.33 | 7.01 | 5.50 | 4.13 |
| 1910 . . . . . | — | 47.2 | 39.1 | — | — | 73.5 | — | — | 34.1 | — | 5.18 | — | 7.96 | 3.23 | 8.36 | 4.86 | 4.76 |
| 1911 . . . . . | — | 54.8 | 40.5 | — | — | 84.5 | — | — | 52.2 | — | 8.16 | — | — | 4.38 | 7.80 | 5.73 | 4.06 |
| 1912 . . . . . | — | 47.2 | 41.4 | — | — | 82.4 | — | — | 49.7 | — | 9.40 | — | — | — | 9.40 | 8.20 | 5.06 |
| 1913 . . . . . | — | 46.4 | 39.7 | — | — | 85.4 | 91.8 | — | 58.0 | — | 3.43 | — | — | — | 11.15 | 7.80 | 6.13 |

The exact yields of straw and beet are not known. With regard to wheat Molds Red Prolific was chosen in 1911 as it stands cold well and the grain, owing to its good milling quality, fetches a better price than other foreign sorts grown in the district. Squarehead does not stand the winter well and yields poorly, so it has been given up. Criewener 104, a good yielder but rather late, has also been tried as well as Strubs square.

Broad casting was dropped in 1911 ; the drill was introduced very opportunely, as this year was exceptionally dry.

*Agricultural improvements.* — The old organisation was changed in the autumn of 1905 and from this date progress has been rapid. Formerly the approaches to the holdings were sown and their use forbidden by police order, from seed time to harvest. Now, plots of less than 0.3 acre have vanished, and the area includes only 4600 plots instead of 8000. Unfortunately they are still too small for harvesting machines to be used.

Other agricultural improvements are : new drainage systems and repair of existing systems ; clearing of watercourses and levelling of the soil.

*Stock.* — The holding studied carried 14 head of cattle, equivalent to one animal, weighing 1 100 lbs. to 2.9 acres, compared with one animal to 5.7 acres for the period 1896-1905. The increase is due to the growth of vegetable produce and the dearness of meat. Efforts are made to obtain a good yield of milk, as well as to find animals well shaped and easy to fatten ; the average weight of each cow which varied from 992 to 1 047 lbs. 10 to 15 years ago, is now 1 272 lbs. The yield of milk has also gone up from 600 to 620 galls. in 1906 to 700 galls. in 1913. The stock is grazed on the parish land for the first year, for the second year on the Simmenthaler pasture in the Oberlahn district.

The holding supported an average of 18 pigs, with a live weight of 89 to 112 lbs. per acre. Breeding has been given up and animals bought at 6 weeks are fattened and sold at 6 months.

*Public woodland.* — The public woodlands, which occupy about 1000 acres, are on deep sandy soil ; their net yield per acre only reaches 3.s. A century ago, one eighth part of these woods was pasture, but the forest department objected to their restoration to their old state.

*Labour.* – By comparison with the Eastern provinces, the district of Wiesbaden, thanks to its small holdings, is particularly well off with regard to labour. It took only 835 out of 367 364 foreign labourers employed by German agriculture, whose importation was approved by the " Deutsche Arbeitzentrale " for 1912-13.

With regard to the transfer of rural property, it should be noted that a peasant takes over this father's holding when he is about 35 years old. The father can still look after the stock and the mother manage the home. Often one or two of the brothers or sisters of the young holder are unmarried and help him as paid workers. Otherwise he hires a labourer or woman worker. The children of the holder also help on the holding. After some years hired labour can be replaced by that of his grown up children. The holder enlarges his farm by buying or renting new plots ; he saves money or pays off his debts. Between 24 and 26 the eldest son marries and settles

down with his wife in the parental home. The old people continue to manage the holding for some years. The young wife brings as her dowry some land and often a little money. These plots are worked along with the parents' holding to the advantage of the young couple who thus begin at once to increase their property.

1116 - **Statistical Report on the Influence of Distance from Market on the Value of Rural Property in Missouri, U S. A.** — JOHNSON, O. R. in *Freeman's Farmer*, Vol. 70, No. 5, p. 11. North Jakina, Wash., May, 1916.

The statistical report, by the Missouri Agricultural Experiment Station, on 650 holdings in Johnson county, was designed to show within what limits distance from market affected the value of the holdings, and has given the following results :

| Class | Distance from market | Number of holdings per class | Mean value per acre |
|---|---|---|---|
| — | — | — | $ |
| I . . . . . | 2 miles | 79 | 78 |
| II . . . . . | 4 » | 183 | 70 |
| III . . . . . | 6 » | 126 | 61 |
| IV . . . . . | 8 » | 113 | 55 |
| V . . . . . | 10 » | 149 | 56 |

| Class | Value of holding per acre | Number of holdiugs per class | Distance from market miles |
|---|---|---|---|
| — | $ | — | — |
| I . . . . . | more than 100 | 42 | 2,5 |
| II . . . . . | 80-100 | 62 | 3,0 |
| III . . . . . | 60- 80 | 275 | 5,0 |
| IV . . . . . | 40- 60 | 246 | 6,2 |
| V . . . . . | less than 40 | 25 | 5,5 |

The low unit value of the 25 holdings in group V is largely due to the poor quality of the soil ; this factor is here more important, in fixing the value, than distance from market.

## AGRICULTURAL INDUSTRIES.

INDUSTRIES DEPENDING ON PLANT PRODUCTS

1117 - **The Use of Cider Apples and Cane Sugar in a Beet Sugar Distillery.** — GAILLARD, E. in *Comptes Rendus de l'Académie d'Agriculture de France*, Vol. II. No. 24, pp. 676-681. Paris, 1916.

At the beet sugar distillery of Oisement, in the department of the Somme, experiments were carried out on the mixing of cider apples and cane sugar with sugar beet, or sugar beet molasses.

The apples were treated in two ways ; they were either mixed with sugar beets in the washing machine and then cut into the usual long narrow slices and handled as beets, or they were put into the diffusion cylinders alone in the form of thin flat slices $^1/_6$ in. thick. As apples contain very little

yeast food a certain number of the diffusion cylinders were charged with beet and each day some juice was withdrawn from them and added together with nutrient salts to the apple slices in order to assist fermentation. The yield of alcohol from the apples was taken as the difference between the total yield and that of the added beet juice. It amounted to not quite 10 gallons of rectified alcohol (100°) (rectified spirit and fusel oil) per ton of apples. It should be borne in mind that the experiment was carried out at the end of December 1915 and during the month of January 1916, or in other words at a season when the sugar content of apples was daily decreasing.

In the case of cane sugar, a starter was prepared at the outset, using a solution of beet molasses of a density of 1.055 to 1.060 and containing 2.4 to 2.5 gms. of acid per litre (expressed as sulphuric acid). To this, nutrient salts were added at the rate of 0.5 per cent of sulphate of ammonia and 0.6 of phosphate of soda. The starter was inoculated with yeast obtained from a grain distillery and fermentation was kept active by aeration. For the experiments, large vats of about 5000 gallons capacity were used and these were one third filled with starter. The cane sugar juice acidified till it contained 0.7 to 0.8 gm. of acid per litre, was then run into the vats on the top of the starter, the proportion of cane to beet sugar rising very gradually from 4 :20 to 80 :20. It was found that 18.3 lbs. of cane sugar were required to produce 1 gallon of rectified alcohol (rectified spirit and fusel oil). The cane used had a polarisation value of 92.

1118 - **Refraction Constants of Various Vegetable Fats and Oils.** — HEIM, F. in *Bulletin de l'Office colonial*, Vol. IX, No. 102-103, pp. 267-276. Melun, 1916.

A number of vegetable fats and oils originating from the French colonies were examined at the French Colonial Office with a view to determining the relationship, if any, between their refractive indices and other constants in common use, and their chemical composition.

The samples were ground in a mill and extracted in the cold with benzine which was afterwards distilled off in a warm bath, the residue being finally raised to 100° C. to drive off any remaining traces of benzine. Fats or oils thus obtained were filtered before having their refractive indices determined in a Fery refractometer. The results are set out in the adjoining table, and the writer draws the following conclusions :

1) The determination of the index of refraction yielded a very reliable means of estimating the chemical purity of any fat or oil. For instance the oil of *Thea sinensis* gave a refractive index of 1.4707 to TSUJIMOTO in Japan, and an index of 1.4706 in the present investigations. Other constants showed far greater variation more especially those resulting from chemical tests ; it would therefore appear that the measurement of physical characters is a much more accurate guide to the purity of fats and oils than is that of the chemical characters.

2) Except in the case of *Ricinodendron africanus* the index of refraction always varied with the iodine value.

3) As a rule the index of refraction increased as the saponification

*Composition and Constants*

| Oil seed | Botanical family | Fat constants | | | | | | | |
|---|---|---|---|---|---|---|---|---|---|
| | | Density | Melting point | Acid value | Saponification value | Reichert value | Hehner value | Iodine value | Index of refraction |
| | | | °C | | | | | | |
| "Karité" *Butyrospermum Parkii* Kotschi | Sapotaceae | 0.900 $^{32°}$ | 32° | 7.7 | 196 | 1.1 | 95.25 | 69.6 | 1.4654 $^{32°5}$ |
| | | 0.917 $^{15°}$ | Solidif. 17-18° | — | 192 | — | — | 67.2 | — |
| *Dumoria Heckeli* A. Chev. | Id. | 0.956 $^{15°}$ | 34° | 5.6 | 188 | 0.8 | 96.8 | 56.4 | 1.4606 $^{30°}$ |
| *Ricinodendron Africanus* Muell. Arg. | Euphorbiaceae | 0.937 $^{15°}$ | 20° | 16.8 | 185 | 1.5 | 93 | 87.6 | 1.5034 $^{32°}$ |
| *Hevea Brasiliensis* Muell. Arg. | Id. | 0.930 $^{15°}$ | 26° | 57.4 | 206 | — | — | 128.3 | — |
| | | 0.924 $^{15°}$ | — | 29.9 | 185.6 | 0.5 | 96.4 | 133.3 | 1.4698 $^{30°}$ |
| *Symphonia lævis* | Clusiaceae | 0.872 $^{20°}$ | 15–16° | 8.4 | 189 | 1.65 | 94.3 | 66.7 | 1.4648 $^{28°}$ |
| *Symphonia Louveli* | Id. | 0.879 $^{20°}$ | 15–16° | 8.4 | 189 | 1.65 | 94.1 | 67.6 | 1.4645 $^{29°5}$ |
| *Carapa microcarpa* A. Chev. | Meliaceae | 0.895 $^{15°}$ | 16° | 8.4 | 188 | 3.3 | 92 | 58 | 1.4677 $^{28°}$ |
| *Sacoglottis Gabonensis* Urb. | Humiriaceae | 0.900 $^{15°}$ | — 2° | — | 188 | 5.5 | — | 85.8 | 1.4707 $^{17°}$ |
| *Pentadesma butyracea* Sabine | Clusiaceae | 0.899 $^{15°}$ | 32° | 16 | 193 | 0.3 | 95.2 | 68.5 | 1.4590 $^{35°5}$ |
| *Balanites Thieghemi* | Simarubaceae | 0.908 $^{15°}$ | liq. | 9.4 | — | 6 | 92.5 | 121 | 1.4737 $^{17°}$ |
| "Aouara" (pericarp) *Astrocaryum vulgare* Mart. | Palmaceae | 0.916 $^{15°}$ | — | 31.4 | 196.8 | — | — | 75.2 | — |
| | | 0.887 $^{19°}$ | — | — | 184 | — | — | — | 1.4618 $^{29°}$ |
| Idem (kernels). | Id. | — | 29°3 | 9.6 | 242.9 | — | — | 10.7 | 1.4563 $^{31°5}$ |
| | | 0.915 $^{17°}$ | 30° | — | 214 | — | — | 9.6 | — |
| *Thea Sinensis* Linn. | Cameliaceae | 0.910 $^{15°}$ | liq. | 7.5 | 176.6 | 15.5 | 86.5 | 72.6 | 1.4717 $^{16°8}$ |
| | | 0.917 $^{15°}$ | Solidif. 10° | 0.74 | 191.9 | 0.66 | — | 90.4 | 1.4707 $^{20°}$ |
| *Funtumia elastica* Stapf. | Apocynaceae | 0.929 $^{15°}$ | liq. | 1.8 | 167.6 | 12.1 | 94 | 139 | 1.4798 $^{17°}$ |
| *Sorindeia oleosa* | Anacardiaceae | 0.889 $^{17°}$ | 16–17° | 4.9 | 185 | 7.92 | 91.75 | 132 | 1.4682 $^{26°2}$ |
| "I'Sano" *Ongokea Gore* Pierre | Olacaceae | 0.973 $^{23°}$ | < — 15° | 4.7 | 206.4 | 33.5 | 93 | — | 1.5143 $^{17°}$ |
| "Moabi" *Mimusops obovata* Pierre | Sapotaceae | 0.894 $^{30°}$ | 32–33° | 56 | 238.0 | 11.5 | 88.25 | 57.1 | 1.4638 $^{29°}$ |
| *Chrysophyllum Congoense* | Id. | 0.870 $^{15°}$ | 31° | 68.5 | 175.7 | 1.76 | 95 | 49.9 | 1.4671 $^{22°}$ |

*of Various Vegetables Fats and Oils.*

| Melting point of fatty acids | fatty acids | | Nature of fatty acids | | Remarks | Authorities consulted for chemical properties of fats and oils |
|---|---|---|---|---|---|---|
| | saturated | unsaturated | saturated | unsaturated | | |
| | Per cent. | Per cent. | | | | |
| 51° | 67 | 33 | palmitic stearic arachidic | oleic | yellowish-white | Hébert |
| 56° | — | — | — | — | — | Various |
| 60° | 67 | 33 | palmitic stearic cerotic | oleic | yellowish-white | Hébert |
| 43° | 30 | 70 | myristic palmitic | oleic linoleic | yellow | Hébert |
| — | — | — | — | — | brown | Imp. Inst. |
| — | — | — | stearic | oleic linoleic linoleic | — | Imp. Ist. |
| 42°.5 | 40 | 60 | capric lauric margaric arachidic | oleic | yellow | Hébert |
| 43° | 35 | 65 | capric lauric margaric arachidic | oleic | yellow | Hébert |
| 28° | 45 | 55 | myristic stearic palmitic | oleic | yellow | Hébert |
| — | — | — | — | — | yellow | Hébert |
| 60° | 90 | 10 | palmitic stearic | oleic | yellowish-white | Hébert |
| 35° | 37 | 63 | — | — | yellow | Hébert |
| 32°.2 | — | — | — | — | dark brown | Boutoux |
| 34° | — | — | — | — | dark brown | Hébert |
| — | — | — | — | — | yellowish-white | Boutoux |
| 24° | — | — | — | — | yellowish-white | Hébert |
| 36° | 42 | 58 | capric lauric | oleic | yellow | Hébert |
| 33°.5 | — | — | — | — | — | Tsujimoto |
| 27° | 40 | 60 | lauric myristic margaric | oleic | yellow | Hébert |
| 39-40° | 76 | 24 | inferior acids | oleic | brown | Hébert |
| liq. | 0 | 100 | none | oleic 15 % linoleic 75 % isanic 10 % | Impossible to determine; Iodine value, very large. dark brown | Hébert |
| 45-46° | 50 | 50 | myristic stearic palmitic | oleic | yellow | Hébert |
| 40° | 50 | 50 | lauric myristic palmitic | oleic | red brown | Hébert |

value decreased. Exceptions to this rule were the oil of " I Sano " and the fat of *Ricinodendron africanus*.

4) No relationship could be traced between the index of refraction and the remaining constants, *i. e.* acidity value, Reichert and Hehner numbers.

5) With regard to the influence of the chemical composition on the index of refraction, it is obvious that the value of the latter must be dependant on the actual constitution of the fat or oil. Inasmuch as each fat or oil consists of mixture of the fatty acids or of the glycerides of the fatty acids, the refractive index of the whole substance must be influenced by the refractive indices of its component parts.

If the fat or oil be a true mixture and the optical characters of each of its constituents were known it should be possible to calculate either its refractive index from a quantitative chemical analysis or *vice versa*. But up to the present no other refractive indices beyond those of stearic, palmitic and oleic acids have been determined and the indices of all the glycerides have still to be investigated. Under these conditions it is very difficult to say with any degree of certainty whether fats and oils really consist of true mixtures and whether it will ever be possible to check experimental results by calculated values. The only example at present available in this connection is the fat of *Pentadesma butyracea* which consists of 90 per cent of stearic and palmitic acids with 10 per cent of oleic acid. Its refractive index works out to 0.512 at 79° C. ; practical tests gave 0.530.

INDUSTRIES DEPENDING ON ANIMAL PRODUCTS

1119 – **The Grading of Milk.** — KELLY, E. in *Hoard's Dairyman*, Vol. LII, No. 1, pp. 1 and 6. Fort Atkinson, Wis., July 28, 1916.

The grading of milk is made necessary by the fact that it costs more to produce milk of one quality than of another, and that the producer ought to be paid accordingly. A first attempt to sell a very pure milk in the United States was made about 25 years ago when a " certified " milk was put on the market in New Jersey. This was intended for infants and invalids and was produced under strict medical supervision and at a great expense. Since then several health departments have granted permits for the sale of " inspected " milk which is not of such high quality as the certified milk, but still considerably better than the average supply. Such inspected milk usually fetches one or two cents per quart over and above the current price.

Grading may be done either by the milk dealer from purely business motives, or by the town or state officials for the benefit of the consumers. Three principal factors determine the quality of the milk, *i. e.* its fat content, the number of bacteria it contains, and the sanitary condition of the dairy farm where it has been produced. Some dealers grade milk on the fat content alone, others only on the standard of the cleanliness at the dairy farm, while a few health authorities simply use the bacterial counts.

As an example of payment for graded milk : one large dairy company buys on a schedule in which prices are quoted for each month and for milk with a fat content ranging from 3 to 4.2 per cent. During the six winter months a difference of 4 cents per point is made for each 100 lbs. of milk ; in summer the difference is 3 cents per point. This amounts to 40 cents

a pound for butterfat in winter and 30 cents in summer. If the milk contains less than 8.5 per cent of solids non fat, 2 cents per 100 lbs. of milk are deducted for every point below the standard. There are also other deductions made as follows: 5 cents per 100 lbs. of milk if it is received at a temperature above 60° F.; 5 cents per 100 lbs. if it contains more than one million bacteria per cc.; and 2 cents per 100 lbs. if the condition of the home dairy is not satisfactory.

As an example of grading by health authorities, New York City and Newark N. J. recognise four qualities of milk: *A* raw and pasteurised; *B* pasteurised; *C* to be sold only for cooking. Daily sales for New York City are divided as follows:

| | | | | | |
|---|---|---|---|---|---|
| 50 000 | quarts of grade | *A* (raw) | at 12 to 22 | cents per | quart |
| 145 000 | " " " | *A* (pasteurised) | 10 to 11 | " " | " |
| 2 305 000 | " " " | *B* " | 9 | " " | " |

The main requirements for each grade are set out in the adjoining table.

*Grades of Milk Sold in New York City.*

| Grade | Health of cattle | No. of bacteria | | No. of marks for conditions under which milk is produced | Temp. | Age at delivery | Remarks |
|---|---|---|---|---|---|---|---|
| | | Before pasteurisation | At time of delivery | | | | |
| *A* raw | Tuberculin test and general examination | — | 60 000 | Equipment. 25<br>Methods . . 50 | 50° F | Not more than 36 hours | — |
| *A* pasteurised | General examination | 200 000 | 30 000 | Equipment. 25<br>Methods . . 43 | 50° F | 36 hours after pasteurisation | — |
| *B* pasteurised | » » | 1 500 000 (1) | 100 000 | Equipment. 20<br>Methods . . 35 | 50° F | » » | — |
| *C* for cooking | » » | 300 000 (2) | 300 000 | 40 | 50° F | 48 hours after pasteurisation | Sold only in cans |

(1) Pasteurised in the city.
(2) Pasteurised outside the city.

1120 - **Pasteurization of Milk in the Bottle.** — In *Pure Products* Vol. XII, No. 8, pp. 385 392. New-York, August, 1916.

There are at present three methods by which milk is pasteurized : The " flash " or continuous method ; the " holder " or intermittent method, and the method of pasteurizing in bottles which is the latest device for the pasteurization of milk.

In the " flash " process milk is heated at 160° to 165° F. for 30 to 60 seconds. This process has the disadvantage that the milk is often heated too high or is scorched, causing the milk to have a peculiar and unpalatable taste. In the " holder " process milk is heated to and kept at 140° F. to 145° F. for 30 minutes. The pasteurized milk should then be cooled and kept at a temperature below 50° F. The " holder " process, in which compartments or tanks are employed, does not give a uniformly pasteurized product since the large volume of milk makes it impossible to heat it uniformly, one corner or section of the tank being always hotter or colder as the case may be. The tank being necessarily divided into compartments or sections, pockets are created making a positive circulation of milk and therefore a uniformity of temperature in the entire vat or compartments impossible. At any rate in both of these methods — the " flash " and the " holder " process — a recontamination, while filling the milk into bottles cannot be avoided. The third method avoids the risk of recontamination, as the milk is first bottled and then pasteurized.

Pasteurization of milk is frequently done very inefficiently, usually owing to ignorance or carelessness. When the heat applied is insufficient either in amount or time of application, disease germs are not all destroyed and as a consequence epidemics of streptococci, sore throat, typhoid fever, etc., have started. In order to obtain a uniform product it is essential that not only the pasteurization process must be given the proper attention but that proper and efficient devices must be applied in the soaking and rinsing of the bottles. It is useless to apply the most complete pasteurizing outfit if the bottles into which the milk is to be filled are not cleaned properly, and, on the other hand, it is insufficient to use a clean bottle if the pasteurization process is incomplete. The Barry-Wehmiller System of *soaking*, washing and rinsing of the bottles, clarifying of the milk, filling and pasteurizing of the filled bottles is said to be the " last word " in the production of a safe milk. A short description of this model plant may serve to give an idea of the arrangement and machinery used.

As soon as the full cans are received from the wagons they are immediately poured through a *screened* receiving pan from which the milk flows into two 2 000 gallon Pfaudler Glass-Lined Receiving Tanks.

The tanks are lined with glass enamel on the interior and the inner shell provided with an outer jacket. Within this jacket circulates brine, which keeps the milk cold. The jacket is insulated externally with cork blocks. At the bottom of the tanks are perforated air pipes through which washed and filtered air is supplied under pressure from the aerator and compressor. The action of this forced air keeps the milk in complete and constant agitation.

The milk kept in tanks is in contact with a much smaller surface than if kept in cans. The surface which 2,000 gallons of milk come in contact with if kept in 200 cans of ten gallons each represents 1,100 square feet whereas if milk is stored in a Pfaudler tank holding 2,000 gallons, it is in contact with but 110 square feet, or just one-tenth of the surface. In other words, by eliminating can storage the surface is reduced 90 per cent. The more surface the milk comes in contact with, and the longer the milk is kept, the higher the chances of an accumulation of bacteria.

When ready for filling, the milk flows from these tanks into a milk pump which forces it to the floor above through a clarifier, thence direct to the bottle filler.

The empty bottle cases are unloaded from the wagons and delivered by a *gravity conveyor* directly in front of the *soaking machine*. The bottles are taken out of the cases and put into the *pockets* of the soaker. The empty cases, after being cleaned, are deposited on a gravity conveyor which carries them to the discharge end of the pasteurizing machine ready to be refilled with pasteurized milk.

Now the bottles pass mechanically through the soaker which consists of a large tank divided into from 3 to 6 compartments, all of which, except the last, are filled with hot water and caustic soda solution. The first compartment of the soaker contains the strongest solution of caustic soda at a temperature of 110°. The following compartments contain solutions of less strength at temperatures as high as 180°. The last compartment is kept filled with fresh water at a temperature of 80°.

The bottles are passed successively through these various compartments, occupying a total time of 20 minutes for the entire process.

After passing through this soaking system, the bottles are delivered mechanically to the outside pressure washing machine, where the outside of the bottles are washed by jets of water under pressure, and the inside is filled with water at the same time, which frees them from the caustic soda solution to which they have previously been subjected. The bottles are then passed mechanically to the large inside pressure washing machine in which they are thoroughly cleaned, each bottle being subjected to five successive washings in the inside. Three of these five washings are by means of water circulated under pressure by a centrifugal pump at 65 pounds per square pressure by a centrifugal pump at 65 pounds per square inch. The final two washings are performed by water directly from the fresh water supply. The water used in these final washings is the only water actually consumed as all the other water is reused.

During this process of interior washing, the bottles are once more washed externally by jets directly from above, which jets are also connected with a pump and supplied by reused water. The greatest efficiency is therefore, obtained with a minimum amount of fresh water expense.

After the final washing, the bottles are delivered mechanically on a brass platform from which they go to the filler.

The filler passes them in a circular direction and fills the bottles at the

rate of from 60 to 90 bottles a minute. Each bottle is filled to a definite line, which can be altered as required.

When filled, the bottles move mechanically to the crowning machine and are capped continuously with seals. The only labour required in this process is to keep the machines supplied with *crowns*.

When this capping process is completed, the work of bottling is considered 90 per cent , finished , as the only remaining work required is to place the bottles by hand into the baskets of the pasteurizing machine.

The pasteurizing process is entirely mechanical and requires one hour and twenty minutes, During this time the bottles are submerged slowly and continuously through the various compartments, bringing the temperature of milk gradually up to 145°. The bottles then are slowly passed through water of this temperature for 25 minutes. After this treatment the bottles continue on their journey through water of gradually decreasing temperature until they finally reach ice-cold water, the passage through which takes 15 minutes. They emerge at the discharge end of the pasteurizer at a temperature of 36°.

The delivery of pasteurized and cooled milk is continuous and is going on all the time the baskets are being loaded from the crowning machine.

The bottles are now taken out of the baskets of the pasteurizer and placed in the original cases which have been delivered as previously described. The filled cases are placed on a *gravity conveyor* which delivers them mechanically into the refrigerating room where they remain until required.

The various sections of the pasteurizer are thoroughly insulated with cork for the cold sections, and asbestos for the hot sections thus preventing radiation of heat and cold and securing maximum efficiency of the apparatus.

The motive power required for running the machines is as follows : The combined soaker and washer is handled by a 6 horse-power motor ; the filler and crowning machine each require a ½ horse motor. The large pasteurizing machine is operated by a half horse motor. All these machines are large enough to handle 4 000 quart bottles per hour. The number of operators required for the entire system may be conservatively estimated at six.

The cost of operating this system is as follows : Six men at 15 cents per hour, 90 cents, or 22 ½ cents, per 1000 bottles. Steam and refrigeration, according to records since January 1st, amounted to 75 cents per 1000 quart bottles : crowns for small neck bottles, 80 cents per 1000. This is a total of $ 1.77 per 1000 quart bottles.

This plant of the Steinlage Sanitary Milk Co. is of unusual interest because it marks the beginning of a new application of pasteurization to the milk trade. It is the first milk plant in the United States to adopt the system in its entirety, including the small neck bottles. The Steinlage bottles are the same style as used for grape juice.

The pasteurization of milk in bottles must be considered a progressive

step because the principle applied is a perfect one and the results are uniform and positive.

1121 – **Digestibility of Very Young Veal** (1). — LANGWORTHY, C. F. and HOLMES, A. D. in *Journal of Agricultural Research*, Vol. VI, No. 16, pp. 577-588. Washington D. C., July 17, 1916.

The sale of calves aged less than 3 to 6 days is prohibited in the United States by Federal and State laws. Yet in regions where the dairy industry is highly developed, milk is such an important product that it is not thought profitable to rear calves beyond the period when the mother's milk becomes saleable, and so, even though they cannot be marketed as butcher's meat they are often slaughtered at 3 to 6 days old.

The prejudice against young veal is inspired chiefly by a belief that it is indigestible and may cause physiological disturbances. In order to determine how far this belief is founded on fact, various investigators have compared the meat of very young calves with that of more mature calves, both in respect to their chemical composition and their digestibility. On the whole the balance of evidence goes to prove that very young veal is not unsuited to use as human food. As very little information, however, is available as regards the co-efficient of digestibility of very young veal, a series of experiments was undertaken, to determine the completeness of digestion of this material by the human subject in normal health.

Five active young men were selected as the subjects of the experiments. An average of 237 gms. of meat (from calves not more than 5 days old), furnishing 78 gms. of protein or 75 per cent of the total protein of the diet, was eaten daily by each man. The results showed that the digestibility of total protein and that of the meat protein alone were practically identical (92.9 and 92.7 per cent).

The experiments were repeated with the same subjects, but using market veal in the place of the very young veal. The digestibility of the protein in the total diet was again 92.9 while that of the meat was 92.8. In other words very young veal and market veal were found to be equally digestible. No physiological disturbance of any kind were experienced by the subjects either during the experimental period or afterwards.

1122 – **Disadvantage of Selling Cotton in the Seed.** — CRESSWELL, C. F. *United States Department of Agriculture, Bulletin* No. 375, pp. 1-18. Washington, D. C. August 9, 1916.

AGRICULTURAL PRODUCTS : PRESERVING, PACKING, TRANSPORT, TRADE

The practice of selling cotton in the seed, though less prevalent than formerly, is still fairly common in the United States. In regions where the crop is not grown in sufficient quantities to attract regular buyers, the producer is thereby enabled to raise cash on his harvest more quickly than he would by the sale of ginned cotton. As a matter of fact, the advantage is a small one and only amounts to the saving of the time he spends in waiting his turn at the gins. Baled cotton being saleable directly to merchants and liable to make the farmer independent of the middleman, ginners do not encourage the sale of ginned cotton, more especially as in

(1) See also *B.* April 1916. No. 455.

buying cotton in the seed, they take into account the speculative nature of the business and generally manage to secure a profit in addition to their regular ginning charge. According to the figures of the Bureau of Crop Estimates 8 to 9 per cent of the total cotton crop in the United States is sold in the seed, while the amounts in Virginia and Missouri rise to 60 and 90 per cent respectively.

In order to obtain reliable information as to the relative advantages of the two methods of marketing, an investigation was carried out in Oklahama during the season 1913-14. Every week a number of samples of seed cotton were collected in representative markets. Each sample weighed 10 lbs. and with it was secured a record of the seller's name, the date, place of sale, and price per 100 lbs. The samples were all sent to Washington where they were ginned and carefully graded.

For the purpose of comparing the returns obtained by marketing the cotton before ginning, with its real value as determined by the ginning, the price paid for seed cotton was converted into its equivalent price per baled lint as follows:

Taking as an illustration a load of seed cotton which was sold at $4 per 100 lbs. and which on being ginned yielded:

| | | | | |
|---|---|---|---|---|
| 30 | per | cent | of | lint |
| 68 | " | " | " | seed |
| 2 | " | " | " | trash |

| | | |
|---|---|---|
| Lint used for bagging and tying at the rate of 22 lbs. per 478 lbs. (rated at the same price as the other lint sold) | = | 1.38 lbs. |
| Therefore total weight of lint sold | = | 31.38 lbs. |
| Value of seed at $ 20 a ton | = | $ 0.68 |
| Therefore payment for lint | = | $ 3,32 |
| Ginning and baling charge at $ 0.070 per 100 lbs. | = | $ 0.22 |
| Therefore total cost to buyer of 31.38 lbs. of lint | = | $ 3.54 |
| Cost of 1 lb of lint or "equivalent lint price" | = | $ 11.28 cents. |

By tabulating these "equivalent lint prices", wide variations were found to exist between the prices received for the same quality of lint in the same market and during the same week. This amounted in one instance to as much as 5.21 cents per pound or $26.05 per bale. Moreover it commonly occurred that lint of low quality brought in more money than lint of higher quality.

The fact that the proportion which lint, seed and trash bear to one another varies considerably in different samples and that it is impossible to estimate with any degree of accuracy either the value of these proportions or the quality of the lint before the cotton is ginned makes it impossible to fix a fair price for cotton when sold in the seed. Such a method of marketing is unsatisfactory to both buyer and seller. In some instances the producer will receive more for his crop in the seed than he would in the bale, but in the large majority of cases he loses. Both farmer and ginner are advised for the common good of all to make ginning customary, so that it may be possible to sell each bale on its individual merits.

1123 – **Tendency Towards a Levelling of Prices for Fresh and Frozen Meat.** — SAGNIER, H. in *Comptes Rendus des Séances de l'Académie d'Agriculture de France*, Vol. II. No. 16, pp 477-481. Paris 1916.

The subject of frozen meat has been under discussion at the "Académie d'Agriculture" on previous occasions and a report has been made by TISSERAND on the progress of the industry in England. In the month of February of the present year (1916) the English Board of Agriculture published the returns for the imports of frozen meat into England during 1915. These show a considerable rise on those for 1914 owing to the fact that large quantities of meat were reexported to France. Imports of beef rose from 200 000 tons in 1914 to 300 000 in 1915 while the values increased from £8 735 000 to £17 798 000 showing a marked upward tendency in prices. So strong is this tendency that the difference in price between fresh and frozen meat is gradually being eliminated. Frozen beef which sold for $4\,^3/_4 d$ per lb. in 1914 was worth $6\,^1/_2 d$ in 1915 (40 per cent increase) and in the course of that year rose to $6\,^3/_4 d$ and reached $7\,^3/_4 d$ per lb. in January 1916;

Mutton has passed through much the same changes, though the total imports are smaller than those of beef. Frozen mutton rose from $4\,^3/_4 d$ per lb. in 1914 to $6\,^1/_2 d$ per lb. in 1915 (or an increase of 50 per cent). Frozen mutton which came chiefly from Holland made a lower price than the frozen meat, the average price for 1914-15 being $5\,^1/_2 d$ per lb.

# PLANT DISEASES

## DISEASES NOT DUE TO PARASITES OR OF UNKNOWN ORIGIN.

1124 – **Investigations on the Formation of Cracks in Potato Tubers.** — ZIMMERMANN, H., in *Zeitschrift für Pflanzenkrankheiten*, Vol. 26, Fasc. 5, pp. 280-285, Stuttgart, July 30, 1916.

In this paper the author gives an account of the investigations carried out during the years 1906-1915 by the section of plant diseases at the Rostock Agricultural Experimental Station, concerning the formation of internal cracks in potato tubers. The results of these very detailed experiments can be summarised as follows :

The cracks are formed in places where the fields have received too much nitrogenous manure. Owing to the low degree of starch formation the middle tissue of the tuber is poor in starch and transparent in sections. This central tissue is naturally not rich in starch, and the formation of cracks in this region is probably correlated with the lack of starch and is caused by the characteristic growth which is encouraged in the tubers by too exclusive a treatment with nitrogenous manure. The cracks nearly always begin in the middle of the tuber ; when they extend to the outside, the potato is rotten inside owing to the inroads of bacteria.

Often the middle of the tuber is discoloured and lumps of tissue are found instead of the cracks. Sometimes also the darkening of the central region is replaced by a brown zone extending inwards from the point of attachment of the stalk and stretching along the vessels, a feature which is also seen in the potato disease known as " Ringkrankheit ".

The manures that chiefly encourage the appearance of these phenomena are : Chili saltpetre, farmyard manure, and serradilla used as a green manure. It is stated that up to the present time the disease has only appeared in light soils.

According to the author the disease is by origin related to the " Eisen- (Bunt-) fleckigkeit " and the " Kringerigheit " of tubers. It would be necessary to experiment further before deciding whether metereological conditions play the same part.

The cracks are not only found in the tubers of potatoes, but also in the roots of mangold-wurzels, swedes and turnips. Probably they also originate from too much nitrogen.

## DISEASES DUE TO FUNGI, BACTERIA AND OTHER LOWER PLANTS.

1125 – **The Physiological Races of *Erysiphe graminis* on Wheat and Oats.** — REED, M. G., in *University of Missouri, Research Bulletin* No. 23, pp. 1-10. Columbia, Missouri, 1916. GENERALITIES.

From the results of MARCHAL, SALMON, and the author's works the morphological species *Erysiphe graminis* D. C. ("blanc des céréales") should be made up of a considerable number of physiological races, of which each develops on definite hosts and is for the most part connected with only one genus. Thus, for example *Erysiphe* of barley lives on species of the genus *Hordeum*, the *Erysiphe* of wheat on *Triticum*, that of rye, of oats, and of meadow-grass, on *Secale*, *Avena*, and *Poa* respectively. Sometimes it has been possible to note the passage of the parasite from one genus to another of the plant hosts. According to MARCHAL, the *Erysiphe* of oats can grow on *Arrhenatherum elatius* and the *Erysiphe* of wheat on *Hordeum sylvaticum* and on some species of *Aegilops*. However these cases are rare, for there is even, in nature, a tendency towards still greater specialization as well as towards physiological adaptation. SALMON's work follows the same lines, the *Erysiphe* of barley cannot attack all the species of *Hordeum*. *H. jubatum*, *H. murinum* and *H. secalinum* are immune, while *H. bulbosum*, *H. deficiens*, *H. distichon*, *H. hexastichon*, *H. intermedium*, *H. maritimum*, *H. vulgare* and *H. zeocriton* are on the contrary very sensitive. Most of the varieties of *Triticum vulgare* are very susceptible to *Erysiphe*, while the three varieties *T. caesium*, *T. ferrugineum* and *T. pyrothrix* show a high power of resistance. In the present work the results of a long series of experiments are given relative to the physiological races of *Erysiphe graminis* in the genera *Avena* and *Triticum*. There is nothing in the experimental technique that is essentially new ,inoculations were made with a scalpel, but also large quantities of conidia were scattered on the leaves and stem of plants.

*Triticum* spp. — The behaviour of 161 species and varieties of *Triticum* has been studied. It is sufficient in this place to consult the subjoined table where the relation of the varieties of 8 species or types of *Triticum* to *E. graminis* is shown:

In 101 varieties the infection reaches its maximum, 100 per cent, these are varieties that are very susceptible to the attacks of *Erysiphe*. The slight diminution that is seen among the 14 varieties of the second group has no specific value. The simple fact that one trial has given a negative result while in all the others the fungus develops freely cannot certainly be interpreted as the beginning of immunity. The same thing can also

| Species or type of *Triticum* | Varieties | Percentage infections | | | | |
|---|---|---|---|---|---|---|
| | | 100 | 90-99 | 50-89 | 10-49 | 0-9 |
| *Triticum compactum* | 6 | 2 | 1 | 2 | 1 | 0 |
| *T. dicoccum* | 24 | 8 | 3 | 6 | 3 | 4 |
| *T. durum* | 45 | 36 | 0 | 6 | 2 | 1 |
| *T. monococcum* | 6 | 0 | 1 | 3 | 1 | 1 |
| *T. polonicum* | 10 | 9 | 1 | 0 | 0 | 0 |
| *T. Spelta* | 11 | 8 | 1 | 2 | 0 | 0 |
| *T. turgidum* | 7 | 3 | 2 | 2 | 0 | 0 |
| *T. vulgare* | 52 | 35 | 5 | 6 | 3 | 3 |
| Total | 161 | 101 | 14 | 27 | 10 | 9 |

be said about the third group with its 27 varieties, especially in considering the numerous sources of error (conditions of temperature, moisture, technique, etc.) which often interfere with the results in this kind of work .

But when, everything else being equal, the results always tend to be negative, and when the percentage of infection falls below 50, it must be admitted that the case is different, and that the variety under examination is less susceptible than in those cases where artificial infection is almost always successful. The varieties *Triticum Fuchsii*, " Common Emmer ", " Russian Emmer ", " Spring Emmer ", " White Emmer ", and " Rhaphi " of *T. dicoccum* ; the varieties *T. durospermum*, *T. libycum* and " Malaga " of *T. durum* ; the variety *T. vulgare* of *T. monococcum* and the varieties *T. caesium*, *T. erythrospermum*. *T. ferrugineum*, and *T. pyrothrix* of *T. vulgare*, are undoubtedly all immune to a very great extent.

There are some results of special interest, those which have been obtained with the wild wheat of Palestine which is considered by many authors to be a distinct species (*T. dicoccoides* Kcke.) and by others as a variety of *T. dicoccum*. This type of wheat should be very susceptible to the attacks of *Erysiphe*.

With the exception of several species of the genus *Aegilops* which is moreover often considered as a sub-genus of *Triticum*, all the attempts at infecting grasses of various genera. *Avena sativa*, *Brachypodium distachyum*, *Hordeum vulgare*, and *Secale cereale*, have given entirely negative results.

*Avena* spp. — 41 varieties belonging to 17 species of oats have been examined, and, with the exception of *A. bromoides* Gouan. and of *A. sempervirens* Vill. which show a marked degree of resistance, all the varieties are shown to be very susceptible. The *Erysiphe* of oats can also develop on *Arrhenatherum avenaceum* Beauw. The proportion of infection is 14 per cent. The parasite cannot however infect barley or wheat.

The author's work gives many experimental proofs of the existence

and nature of physiological races in *Erysiphe graminis*, and further shows that the degree of susceptibility of the various varieties and species differs considerably, for it is possible in a limited number of cases to give rise to a perfectly immune condition. In such a case, the inoculation of conidia from the parasite produces no effect, or, at the most, it causes little discoloured patches to appear on the foliar limbs. In the susceptible varieties the mycelium develops 2 or 3 days after inoculation in obvious patches which join together often to the extent of covering the leaves and stems with a continuous layer of mycelium; on this layer conidia soon appear in considerable quantities.

1126 – **Experiments on the Wintering of the Teleutospores of "rust" in Grasses.** — KLEBAHN, H., in *Zeitschrift für Pflanzenkrankheiten*, Vol 26, Fasc. 5, pp pp 272-277. Stuttgart, July 30, 1916.

These experiments were carried out to determine if the teleutospores retain the power of germinating after wintering in the earth. To this end, haulms of *Agropyrum repens* Beauv. and leaves of *Phragmites communis* were kept in pots, the plants having been attacked by *Puccinia graminis* Pers. and *P. Phragmitis* respectively. The pots were partly filled with sand and partly with garden earth, and were kept through the winter in the open. Teleutospores were also kept in a pot without a covering of soil for comparison.

On March 30 the cultures of teleutospores were raised and dried. In the control made about April 15 the teleutospores kept under soil or sand had germinated better than those kept in the air. The cultures raised on April 30 germinated equally well (May 8). The pots were left in the open until the end of April, then they were placed in the glass-house, but without watering. On May 25 when other cultures were taken up, the soil of the pot was still damp; in *P. graminis* the power of germination was good, in *P. Phragmitis* it had suffered a little.

In conclusion, the teleutospores of "rust" in grasses, that have been wintered in the earth, germinate in the following spring at least as well as those that have been exposed to the air. From which it follows that, in practice, the haulms of attacked cereals after wintering in the earth, in the next spring can reinfect the host of the aecides though not the cereal itself.

1127 – **Breeding Experiments with a View to Obtaining a *Helianthus* Resistant to "rust" (*Puccinia Helianthi*).** — See number 1072 of this *Bulletin*. RESISTANT PLANTS.

1128 – **Mildew of Cereals (*Sclerospora macrospora*) in Spain** (1). — ARROPHELES, in *El Cultivador Moderno*, Vol. VI, No. 4, 1 fig. pp. 4, Barcelona, 1916. DISEASES OF VARIOUS CROPS

In the province of Huesca (Aragon), the wheat harvest of 1915 suffered a loss of at least 40 per cent. This loss has been attributed to an attack of "mildew".

The parasite has not so far been recorded on rice in Spain.

(1) See *B.* Oct. 1915, No. 1096 and *B.* Dec. 1915, No. 1346. (*Ed.*).

1129 – **Effect of Certain Species of *Fusarium* on the Composition of the Potato Tuber.** — HAWKINS, L. A. in the *Journal of Agricultural Research*, Vol. VI, No. 5, pp. 183-196. Washington, D. C., 1916.

Potato tubers are subject to the attacks of various parasitic fungi. Some of these invade the tuber, kill the cells, break down the cell walls, and cause,directly or indirectly, a more or less complete disorganisation of the host tissues. In the present paper the writer has given the result of a series of researches on the modifications that are produced in the potato by *Fusarium coeruleum* (Lib.) Sacc., *F. oxysporum* Schlecht and *F. radicicola* Wollenw. Each tuber is cut in four and each quarter is placed in a culture tube stoppered with sterile cotton wool. Of the four preparations, two act as control. This method gives results which are much more directly comparable than those that would be obtained if different tubers were used rather than parts of the same tuber, because the amount of sugar, starch and pentosan contained varies very much in different tubers. The most important conclusions can be summarised as follows :

TABLE I. — *Reducing Sugar and Sucrose Content of the Sound and Rotted Quarters of Potatoes. Expressed as percentages of the oaiginal wet weights*).

| Sp. of *Fusarium* and potato number | Reducing sugar | | Sucrose | |
|---|---|---|---|---|
| | rotted quarter | sound quarter | rotted quarter | sound quarter |
| *Fusarium oxysporum* . . 160 | 0.04 | 0.31 | 0.10 | 0.66 |
| » . . . . . 159 | 0.04 | 0.28 | 0 | 0.67 |
| » . . . . . 158 | 0 | 0.44 | 0 | 1.03 |
| *F. coeruleum* . . . . . 149 | 0.13 | 0.40 | 0.12 | 0.39 |
| » . . . . . 150 | 0.04 | 0.47 | 0.24 | 0.50 |
| » . . . . . 151 | 0.17 | 0.37 | 0 | 0.66 |
| *F. radicicola* . . . . . 32 | 0 | 0.03 | 0.04 | 0.24 |
| » . . . . . 26 | 0 | 0.02 | 0.04 | 0.19 |
| » . . . . . 34 | 0 | 0.03 | 0.02 | 0.09 |
| » . . . . . 41 | 0 | 0.02 | 0 | 0.42 |

As is seen in the table all three species of *Fusarium* use the sugars which in most cases disappear almost completely. The fungi secrete two enzymes, sucrase and maltase, which hydrolized the saccarose and maltose. The effect of the fungi on the starch is in marked contrast to their action on the sugars. The amount of starch is undiminished, and there may even appear to be an increase due to the fact that the fungi build up material in the course of the examination. *Fusarium* consumes a considerable quantity of pentosans while leaving the methylpentosans untouched.

TABLE II. — *Pentosan and Methyl- Pentosan Content of Sound and Rotted Quarters of Potatoes (percentage of pentosans, wet weight).*

| Potato number | Sound quarter | | | Rotted quarter | | |
|---|---|---|---|---|---|---|
| | Total pentosans | Pentosans | Methyl pentosans | Total pentosans | Pentosans | Methyl pentosans |
| *F. oxysporum* . . . . . 29 | 0.53 | 0.47 | 0.06 | 0.50 | 0.35 | 0.15 |
| » . . . . . 30 | 0.53 | 0.41 | 0.12 | 0.46 | 0.35 | 0.11 |
| » . . . . . 35 | 0.45 | 0.36 | 0.09 | 0.44 | 0.35 | 0.09 |
| » . . . . . 40 | 0.52 | 0.42 | 0.10 | 0.37 | 0.26 | 0.11 |
| *F. radicicola* . . . . . 171 | 0.28 | 0.23 | 0.05 | 0.25 | 0.20 | 0.05 |
| » . . . . . 174 | 0.37 | 0.32 | 0.05 | 0.29 | 0.24 | 0.05 |
| » . . . . . 176 | 0.25 | 0.19 | 0.06 | 0.26 | 0.21 | 0.05 |

It should be noticed, on the other hand, that the fungi grown in potato extract produce as much pentosan as methylpentosan, so that the given quantities in the table represent the difference between the amount of pentosan destroyed and the amount built up by the fungi.

The crude fibre is a mixture of compounds, among which are some of the cell wall constituents, including cellulose. The distribution of the crude fibre is not as uniform as that of the pentosans. It is 3 $^1/_2$ to 5 times as abundant in the cortex as it is in the inner part of the tuber. Parasitic fungi raise the percentage of crude fibre a little, although the differences in question are always small.

The substances which give mucic acid when boiled with the proper concentration of nitric acid are considered in this paper as galactans. The effect of *Fusarium* on these substances is shown in the following table :

TABLE III. — *Galactan Content of Sound and Rotted Quarters of Potatoes.*

| Rotted with *Fusarium radicicola* | | | Rotted with *Fusarium oxysporum* | | |
|---|---|---|---|---|---|
| Potato number | Rotted quarter | Sound quarter | Potato number | Rotted quarter | Sound quarter |
| 27 | 0.039 | 0.062 | 166 | 0.069 | 0.071 |
| 31 | 0.033 | 0.060 | 167 | 0.068 | 0.076 |
| 42 | 0.029 | 0.030 | 172 | 0.081 | 0.083 |

All the species of *Fusarium* examined gave practically the same results. It is worthy of note that the grains of starch remain intact, while the monosaccharids and disaccharids are attacked by the fungi, although they

form a diastase which readily hydrolizes starch when it occurs in a gelatinous condition.

1130 – ***Fusarium radicicola*, the Cause of Rot in Potato Tubers in the United States.** — PRATT, O. A., in *The Journal of Agricultural Research*, Vol. VI, No. 9, pp. 297-306, Pl. XXXIV - XXXVII, Washington, D. C., 1916.

*Fusarium radicicola* Wollenw. gives rise to two distinct types of rot in potatoes : a dry rot and a soft or gelatinous rot.

Dry rot (" black rot ") is characterised by blackening of the attacked tissues, which in time always acquire a dark sepia-brown colour. The fungus invades the host by three channels : 1) the point of the branch where the swelling of the tuber begins (" stem-end ") ; 2) lenticels ; 3) eyes. In the first case the parasite develops and extends throught the vascular system which turns black and dies, in the second case it spreads more or less completely round the tissues ; finally, in the third case, it passes up the secondary vascular branches but scarcely ever reaches the central axis.

Externally, infected tubers have a sunken brownish-black region. This type of rot is, especially noticeable in potatoes with round tubers such as " Idaho Rural " and " Pearl ". In every case where infected material was isolated, *F. radicicola* and sometimes *F. oxysporum* as well were found. The latter should be considered as an occasional parasite, which gets into the tubers by the necrosed vascular bundles. When the spores of *F. radicicola* were injected into the tubers and stolons of the potato the results obtained were definitely positive ; after longer or shorter periods of time, which vary according to thermal conditions, the characteristic symptoms of " black rot " appeared.

In cases of soft rot (" jelly-end "), the fungus enters the tuber at the point of its formation and the infection spreads inwards ; although it spreads more quickly along the vascular bundles, it effects all the tissues to some extent. It is not long before the diseased parts become brown. This type of rot is found principally in potatoes with oval tubers, the Burbank group, for example " Netted Gem ". There is no doubt, judging from the positive results of inoculations, that *F. radicicola* is able to produce jelly-end rot. But in isolating the pathogenic germs from naturally infected material it could be proved in almost all cases that, in addition to *F. radicicola*, there were also present other species of *Fusarium* such as *F. trichothecioides* and *F. oxysporum*. The last, as shown by CARPENTER'S researchs, can give rise to a soft form of rot in tubers, and considering its almost constant association with *F. radiciola* in jelly-end rot, the author is inclined to believe that it is one of the factors in causing this disease. When tubers infected with " black rot " are sown the crop obtained is to a large extent contaminated, while sowing tubers infected with " jelly-end " rot does not seem to entail harmful results.

*F. radicicola* is widely distributed in Europe and in America. In the United States it has ben reported from the following states : Idaho, Oregon, California, Nevada, Mississippi, New York, Virginia, and the district of Columbia. It is probably well distributed throughout the desert soils, where the damage caused to the potato crop by this parasite can attain to

*Percentage of Disease in Harvested Potatoes.*

| Variety | Condition of seed | Percentage of disease in tubers | |
|---|---|---|---|
| | | Vascular infection | Tuber-rots |
| Idaho Rural | Infected with blackrot | 96 | 82 |
| Pearl | do. | 44 | 40 |
| Netted Gem | Infected with jelly-end rot | 16 | 0 |
| Idaho Rural | Disease free, disinfected | 40 | 0 |
| Pearl | do. | 14 | 1 |
| Netted Gem | do. | 10 | 0 |

enormous proportions ; in fact anything up to 80 per cent of the tubers may be attacked. On the other hand, in a fertile and well irrigated soil, previously planted with grain or leguminous crops, the conditions are unfavourable to the forms of rot mentioned above, and the percentage of infected tubers is always very low.

Control of blackrot : 1) precede potatoes by a crop of lucerne or of other plants which can improve the soil ; 2) maintain the lowest possible temperature in all storage places.

1131 – ***Phytophthora* sp., as the Cause of Black Thread Disease of *Hevea brasiliensis* in Burma.** — DASTUR, I. F., in *Department of Agriculture, Burma, Bulletin* 14, pp. 1-4, 1 plate, Rangoon, 1916.

In *Hevea brasiliensis* black vertical grooves appear on those parts of the trunk that have been laid bare by tapping ; these sink into the wood through the cambium. The infected parts crack and the latex oozes out and some times accumulates between the wood and the new cortical tissue that is being formed. The latter withers and comes off leaving a deep wound or canker in the uncovered woody tissue.

In this way the cambium can be absolutely destroyed. The destruction and alterations in the cambium put a stop to the ordinary renewal of the cortex, but there is an abundant proliferation of callous tissue, and the surface of the trunk which has become gnarled and irregular is not suitable for new incisions. In sections of the diseased tissue the cells are swollen without protoplasmic content, and filled with a yellow-brown gummy substance.

The constant presence of intercellular, non septate hyphae at once suggests the existence of a species of *Phytophthora*, especially, when in addition to the disease of the trunk, a characteristic alteration is observed in the fruits, accompanied by an exudation of latex undoubtedly caused by a *Phytophthora*.

Cultures obtained from diseased fruits and inoculated into the stems of *Hevea* give rise to pathological symptoms identical with those described.

Drought and light are important factors in checking the development of the fungus, which requires moisture. The disease appears soon

after the rains break out and completely disappears after the close of the monsoon with the return of the dry and sunny weather.

The damage caused by "Black thread" is very serious; in 1915 in a plantation of 77 000 trees in Burma, tapping was prevented in 12 000, the loss of rubber being estimated at two to three thousand pounds.

Treatment: 1) the fungus fructifies very poorly on the stem but very profusely on the fruits which should be considered as the principal source of infection; infected fruits should therefore be collected and destroyed when they first appear; 2) pruning should be freely indulged in, so that penetration of sunlight and free circulation of air are ensured; 3) tapping should be stopped and the tapping cuts treated with a 20 per cent solution of carbolineum every five days.

1132 – ***Corticium salmonicolor*** **("pink disease") of Cacao, in the Island of Trinidad, Antilles** (1). — RORER, J. B., in *Bulletin of the Department of Agriculture, Trinidad and Tobago*, Vol. XV, Part. 3, pp. 86-89, 1 pl., Port-d'Espagne, 1916.

At rare intervals during the past seven years the cacao disease known as "pink disease" has been recorded on several plantations in the northern and eastern parts of Trinidad. The disease receives its name from the fact that the attacked branches, especially on the lower or shaded side, are covered with a pink incrustation which is the fruiting stage of the fungus that causes the disease, *Corticium salmonicolor* Berk. and Br. (and not *C. lilacino-fuscum* Berk. and Curt. as was formerly believed).

Up to the present time the fungus is not a really serious menace to cacao cultivation in the West Indies.

It can live at the expense of great many plant hosts and so has caused considerable damage elsewhere; for example, to *Hevea* in the United States, to coffee in Java, etc.

In the case of cacao the small branches are most often attacked and are rapidly killed; if the fungus in the course of its rapid development reaches the larger branches the whole crown of the tree may become infected. The leaves on the diseased branches wither, turn brown and fall to the ground.

Where the disease occurs sporadically the infected branches should be cut out and burnt immediately. If the diseased parts have to be carried out of the plantations they should be put in bags to prevent the dispersal of the spores of the parasite. If the disease should assume serious proportions Bordeaux mixture or other fungicides could be usefully employed. This is a simple matter in cacao plantations or in rubber plantations where the plants are two or three years old.

In cases of serious attack in old rubber plantations spraying is not recommended on account of the almost insurmountable difficulties met with in treating large trees. The disease is more effectively dealt with by cutting out and burning the affected parts, where this is possible, or where only a limited number of trees are attacked. If the infection is wide spread good results have been obtained by treating the diseased parts with tar as soon as

(1) See also Bulletin Sept. 1913, No. 1107, and Bulletin Feb. 1915, No 135. (*Ed.*).

the first symptoms appear. In Trinidad the disease has never so far been discovered on rubber, but now that this plant, is fairly widely cultivated there and in some cases among cacao trees, the surrounding cacao should be carefully watched, so that in case the fungus should appear precautions could be promptly taken to prevent its spreading to the rubber.

1133 – ***Phoma Lavandulae*** **on Lavender (*Lavandula officinalis*) in England.** — BRIERLY, W. B., in *Bulletin of Miscellaneous Information, Royal Botanic Gardens, Kew*. No. 5, p. 113-131, Figs. 1-9, Pl. V-VI, 1916.

*Phoma lavandulae* Gab. was recorded for the first time in England in 1915. It is the cause of a serious disease in *Lavandula officinalis*. The diseased buds and shoots are brown in colour, the leaves wither and fall, and the epidermis splits away in minute silvery flakes. The infection spreads very quickly from one plant to another so that it readily attacks and destroys whole beds.

In pure cultures the fungus produces pycnospores and conidia, which are hyaline with thin walls (which later on become brown while the walls thicken), and characteristic brown chlamidospores, with very thick walls. The thin walled spores germinate quickly ; they are not very resistant to drought and are killed by frost. The thick walled spores on the other hand are very resistant and only germinate after a resting period.

Inoculation experiments gave positive results, and confirmed the pathogenic properties of the fungus which is very probably confined to the genus *Lavandula*. The mycelium branches freely through the host tissues, causing disintegration of the peridermis and phloem. It also penetrates into the xylem and the hyphae often reach the inside of the cells through the pits in the walls. The pycnidia are formed immediately below the epidermis which splits away from the cortex. The optimum temperature for the growth of the mycelium is about 18° to 20° C.

To check the infection the diseased shoots should be cut out and estroyed as soon as they appear.

1134 – ***Fusarium*** **sp. ("die-back disease") a Pest on *Hibiscus* in the Federated Malay States.** — SHARPLES, A., in *The Agricultural Bulletin of the Federated Malay States*, Vol. VI, No. 7, pp. 217-218, Singapore, 1916.

Several species of *Hibiscus* which are cultivated in the Federated Malay States for ornamental purposes are attacked by a fungus that kills the shoots. The disease, whose common name is " die-back disease ", develops principally in hedges of *H. Rosa-sinensis* which are periodically pruned. The shoots blacken and die from the top onwards, the leaves wither and fall, and finally the plant is reduced to a cluster of dead branches. The author has been able to isolate from infected material two fungi in pure cultures (*Colletotrichum* sp. and *Fusarium* sp.). Inoculation experiments showed that *Fusarium* sp. is the specific cause of the disease described above. The mycelium of the parasite penetrates the host by means of the numerous lesions and cuts which result from pruning. It is therefore suggested that this operation should always be followed by an immediate dressing with Bordeaux mixture.

## WEEDS AND PARASITIC FLOWERING PLANTS.

1135 – ***Razoumofskya* spp. Mistletoes Injurious to Conifers in the United States** — WEIR, J. R., in *United States Department of Agriculture, Bulletin* No. 360, pp. 1-39, Fig. 1-17. Washington, D. C., 1916.

It is not generally known that the injury caused by several species of *Razoumofskya* (*Arceuthobium*) to coniferous trees in certain localities of the north western United States has attained to such proportions that the question has assumed all the characters of a serious forest problem. The species which suffer the most are : Western Larch (*Larix occidentalis*), Western Yellow Pine (*Pinus ponderosa*), Lodgepole pine (*P. contorta*), and Douglas Fir (*Pseudotsuga taxifolia*). Each of these hosts in attacked by a distinct species of *Razoumofskya*: *R. laricis* Piper ; *R. campylopoda* (Engelm.) Piper; *R. americana* (Nutt.) Kuntze ; *R. Douglasii* (Engelm.) Kuntze.

The most striking symptom of the disease is the gradual reduction of the leaf surface, caused by the " witch's brooms " and by various outgrowths which occur on the trunk and branches, and which in time can cause the death of the host. In all the cases the development of the tree is seriously retarded, as is shown in the following table :

| Host and condition | Basis (number of trees) | Average | | | |
|---|---|---|---|---|---|
| | | Age class | Height | Diameter breast high | Total annual growth |
| | | years | feet | in. | in. |
| *Pinus contorta* | | | | | |
| Infected . . . . . | 50 | 65 | 35.2 | 6.3 | 0.93 |
| Uninfected . . . . . | 50 | 60 | 48.5 | 7.8 | 2.93 |
| *P. ponderosa* | | | | | |
| Infected . . . . . | 50 | 100 | 49.5 | 18.2 | 1.54 |
| Uninfected . . . . . | 50 | 100 | 77.2 | 22.2 | 5.33 |
| *Larix occidentalis* | | | | | |
| Infected . . . . . | 80 | 144 | 63.0 | 11.5 | 1.28 |
| Uninfected . . . . . | 80 | 144 | 115.0 | 19.5 | 2.154 |
| *Pseudotsuga taxifolia* | | | | | |
| Infected . . . . . | 40 | 97 | 62.0 | 17.3 | 2.175 |
| Uninfected . . . . . | 40 | 97 | 73.0 | 22.2 | 3.28 |

One of the first effects of infection, either of branch or of trunk, is the formation of a fusiform swelling, which is sometimes very pronounced and resembles the enlargements caused by some species of *Peridermium*. On the branches this swelling is the first stage in the development of a

" witch's broom " which grows slowly and attains to enormous proportions. The habit and appearance of the tree is entirely altered. Often under the stress of snow and wind the " brooms " split and fall to the ground, where, piled round the foot of the tree, they constitute a serious danger in case of ground fires.

On the trunk the presence of *Razoumofskya* leads to the formation of burls. When the infection occurs at the base of a branch and then travels towards the main trunk the result is a " broom " which later dries up and falls, leaving in its place a burl which is more or less scarred If, on the contrary, infection occurs directly on the main trunk, the beginning of a burl is at once formed, and this radiates outwards and becomes fan-shaped keeping time with the growth of the tree. Finally the central part of the swelling disintegrates leaving a wide opening more or less deep. This is a convenient entrance for boring insects and for numbers of fungi, which find the decomposing tissues an excellent substratum : *Trametes Pini* (Brot.) Fr., *T. serialis* Fr., *P. volvatus* PR., *Fomes Laricis* (Jacq.) Murr., *F. pinicola* Fr., *Stereum sulcatum* Burt., *Polyporus sulphureus* Fr., *Lenzites sepiaria* Fr., *Corticium Berkeleyi* Cooke, *C. galactinum* (FR.) Burt., *Peniophora subsulphurea* (Karst) Burt, *Ceratostomella pilifera* (Fr.) Wint., and, less often, *Pholiota adiposa* PFr., and *Echinodotium tinctorium*.

The following means of suppressing *Razoumofskya* are suggested ;

1) to fell and remove all badly infected trees, which may or may not be a useful measure ;

2) strict control of nurseries and supervision of plants coming from infected areas ;

3) to plant conifers closely, and eventually to associate them with other species such as yews and junipers which will shut out the light, as shade discourages the development of mistletoe.

1136 – ***Asphodelus fistulosus*** **and** ***Stachys arvensis,*** **Harmful Weeds in New South Wales.** — MAIDEN, J. H., in *The Agricultural Gazette of New South Wales*, Vol XXVIII, Part. 5, pp. 335-338, 2 Pl., Sydney, 1916.

A description of *Asphodelus fistulosus* L. (" onion weed ") and of the labiate *Stachys arvensis* (" stagger weed ").

In Australia the first of these weeds is known not only in New South Wales but also in central Australia (where it is common), in Victoria and in western Australia ; it has not yet been recorded from Queensland. It tends to overrun the ground wherever it manages to establish itself, and no animal appears to feed on it except by accident. Burning it before the flowering season, if possible entirely, is the best method of suppressing this weed.

*S. arvensis* is common in central Australia, in New South Wales, in Queensland and in Victoria ; in New South Wales it is especially frequent, and is reported as causing serious trouble among cattle. As it thrives best in damp places it is advisable to improve the drainage of pasture lands to encourage the development of useful plants.

---

(1) See also *B.* Dec. 1913, No 1403, and *B.* Feb. 1914, No. 187. (*Ed.*).

## INJURIOUS INSECTS AND OTHER LOWER ANIMALS.

GENERALITIES.

1137 – **Insect Pests in India.** — FLETCHER, T. B., in *Agricultural Research Institute, Pusa, Bulletin* No. 59, pp. 1-36, Fig. 1 20, Calcutta, 1916.

The work in question contains one hundred short notices on Indian insect pests.

The following observations, dealing for the most part with agriculture, are worthy of special notice.

Among the Coleoptera, *Adoretus lasiopygus* (fam *Rutelidae*) is a very common species in the Pusa district, where it causes considerable damage to the leaves of plants between June and September ; at Begum Serai it attacked vines stripping off the leaves and injuring the fresh shoots.

*A. versutus* is also very common in numerous Indian localities ; it was reported in June 1910 and 1912 from the Kumaon gardens as a pest on the leaves of vines, pears, plums, apples, and figs, which it attacked in association with *A. horticola* Arrow and *Brahmina coriacea* Hope. Similar damage is caused by another species of *Adoretus* (*A. duvauceli* Bl.).

Numerous Coleoptera belonging to the family *Curculionidae* inflict more or less extensive injuries upon cultivated plants. There are *Phytoscaphus dissimilis* and *Corigetus bidentulus* on tea in Assam and Upper Burma ; *Rhynchaenus* (*Orchestes*) *magniferae* (mango leaf boring weevil), *Cryptorhyncus poricollis* and *Alcides frenatus* on mango trees ; *Xanthotrachelus faunus* and *X. perlatus* which attack the heads of *Helianthus annuus* ; *Calandra linearis* on the fruits of tamarinds and *Myocalandra exarata* on bamboos.

In July 1915 *Lytta actaeon* (Family *Meloidae*) attacked the fields of *Setaria* in the region of the Chota Gandak River in great numbers, completely devouring the leaves.

Among the Lepidoptera, *Calpe ophideroides* caused great damage to fruit in 1914 in the Kumaon Government, especially to peaches and nectarines.

The larval stage of *Argyroploce erotias* (Family *Eucosmidae*) caused considerable damage to the foliage of mangoes by rolling up the leaves and biting holes in them.

*Laspeyresia trichocrossa*, which belongs to the same family, in its larval stage bores its way into the pods of *Cajanus indicus* and there pupates, having destroyed the seeds.

In March 1912 at Pusa the larvae of *Anarsia melanoplecta* were seen to hollow out tunnels in the top shoots of mango twigs.

*Anataractis plumigera* formed galls on the stems of *Indigotera* in which the larvae underwent their first developmental stages.

The larvae of *Acrocerops syngramma*, *A. cathedra* and *A. isonoma* attacked the leaves of mangoes (mango leaf-miners). The caterpillar of *A. ordinatella* feeds in the parenchyma of the leaves of camphor leaving the epidermis intact.

*Prays citri* (Family *Hyponomeutidae*) is found in southern Europe,

in New South Wales (Australia), in the Philippines, in India (North Coorg,) and in Ceylon (Colombo, Maskeliya and Mandulsima). In southern Europe the larvae eat into the flowers and the shoots. In the Phillippines they bore into the rinds of Citrus fruits making a gall, so that the fruits may be seriously damaged. It is quite possible that this insect will soon become a pest in India and Ceylon, where at present its interest is purely entomological.

1138 – **The Caterpillars of the Goat Moth (*Cossus cossus*) and the Codling Moth (*Carpocapsa pomonella*) and their Powers of Resistance to Cold.** — CUEYLARD, F. P., in *Comptes Rendus des Séances de la Société de Biologie*, Vol. LXXIX, No. 15, pp. 774-777, Paris, July 29, 1916.

Experiments show that the caterpillar of *Cossus cossus* can resist freezing of all its organs and tissues. The caterpillar does not appear to suffer even if it is frozen any number of times. A quick transition from a temperature of -15° C. to one of 30° C. does not cause death and does not apparently change the tissues. This resistance results from an adaptation which only occurs in nature during the cold season. It disappears completely during the hot heather.

The caterpillar of *Carpocapsa pomonella* apparently reacts to cold in exactly the same way as that of *Cossus*. This remarkable resistance to cold does not seem to be very wide spread among the invertebrates. It is even far from occuring in the xylophagus larvae.

These differences seem to be correlated with certain peculiarities in the mode of life of these larvae.

1139 – **Observations on the Insect Parasites of Some Coccidae.** — IMMS, A. D., in *The Quarterly Journal of Microscopical Science*, Vol. 61, Part. 3, pp. 217-274, 5 Figs. 2 Pl. London, 1916.

MEANS OF PREVENTION AND CONTROL

This is the first of a series of papers dealing with the biology of the principal insect parasites of certain *Coccidae*, with a view to determine the importance of these parasites in their relation to a family whose economic importance is very considerable. That certain of the *Coccidae* are extensively parasitised is well known, but up to the present time, little has been known of the effects of this parasitism. At the same time these cannot be understood until the essential characters of the relation between host and parasite are fully known. The present paper treats of *Aphelinus mytilaspidis* Le Baron, one of the chief parasites of the "mussel" scale (*Lepidosaphes ulmi* L.).

The paper contains a very complete bibliography, and clear illustrations.

*L. ulmi* is the commonest of the injurious *Coccidae* found in the British Isles. Its favourite food-plant is the apple, but QUAINTANCE and SASSCER record over 118 host plants. It has been stated that the females begin to lay their eggs on or about August 17, and that they continue oviposition on into September. By the end of October almost all the parents are dead and their scales protect the eggs. The newly hatched larvae appeared on May 21 in the following year, and the developmental cycle is completed by

the end of July or the beginning of August. In Great Britain the insect is single brooded, but in certain regions of North America there are two broods.

The number of eggs laid varies a good deal. In America apparently the average number does not exceed 80, while in England the average is about 37,2 eggs per female.

The genus *Aphelinus* is placed among the parasitic Hymenoptera and belongs to the sub family *Aphelininae*. This sub-family is very widely distributed, species being known from almost all parts of the globe, with the exception of the colder temperate and polar regions. A list of the localities in England in which it occurs is given in this paper.

The larvae of the *Aphelinae* are either exclusively parasitic or parasitic and partially predaceous. They confine their attacks almost exclusively to the *Rhynchota*, the *Coccidae* and the *Aphididae* being their principal hosts.

Several hosts are mentioned as being subject to the attacks of this parasite in various regions. The author gives detailed descriptions of diverse stages in the two sexes, of parthenogenesis, of oogenesis, and of the external and internal morphology. Experiments in breeding have been successfully carried out in the Manchester University Biological Experiment Ground, in specially constructed breeding cages, with a view to investigating the biology of the parasite.

The life history of the parasite can be summarised as follows : in one year it passes through two generations, and the adults are almost, always females. Out of 750 individuals reared only 10 were males, about 1 per cent. Reproduction takes place almost entirely by means of parthenogenesis. The adults very rarely fly, and have extremely limited powers of migration. In the first generation the adults appear in greatest frequency between the third week in June and the middle of July. The female lays a single egg on the dorsal or ventral surface of the body of the immature host, only the scaly covering of the latter being perforated. The newly hatched larva closely resembles the fully grown stage in form, and during larval life the insect is an ectoparasite of its host. The second generation of adults mostly appear between the middle of August and the first week in September. They parasitise the sexually mature hosts, and the resulting larvae hibernate through the winter, giving rise to the first generation of adults of the following year. The results of the first generation of parasitism are complete, the affected hosts invariably dying in consequence. In the second generation of parasitsm the affected hosts usually deposit a small number of eggs before succumbing ; its results, therefore, are partial and incomplete. The parasite exercises an inhibitory effect upon oviposition, the essential reduction in the number of eggs not being primarily due, as stated by previous observers, to their destruction by the *Aphelinus* larvae. Assuming that every 100 hosts lay on an average 37 200 eggs, the net results of a year's parasitism entails a reduction of about 2600 in the number of eggs laid, or 7 per cent. The efficiency of the parasite, therefore, is far below that of the most effective insecticides. This is primarily due to four factors : 1) its

extremely limited powers of migration ; 2) its relatively low fecundity ; 3) its marked susceptibility to the influence of unfavourable climatic conditions ; 4) the effects of the second annual generation of parasitism being only partial and incomplete.

1140 – ***Aphicus hesperidum* n. sp., an Ectophagous Parasite on the Cochineal of Citrus Fruits *Chrysomphalus dictyospermi* in Spain** (1).— MERCET, R. G., in *Revista de la Real Academia de Ciencias exactas, físicas, y naturales de Madrid*, Vol. XIV, No. 11, pp. 776-788, Fig. 1-5 Madrid, 1916

A description of the new Chalcidid *Aphycus hesperidum*, an ectophagous parasite of the cochineal insect discovered by the writer on orange trees (at Seville, Huelva, Valencia and Palma in Mallorca), on laurels (at Palma in Mallorca) and on oleanders (at Seville) which had been attacked by this cochineal.

The female of this Chalcidid lays her eggs under the silpha of the host, which later on is devoured by the larva after it has been hatched.

Among the natural enemies of *Chrys. dictyospermi* (2), the writer particularly mentions *Aphelinus chrysomphali*, which he has described in an earlier paper, *Prospaltella lounsburyi* and *Chilocorus bipustulatus*.

1141 – ***Hyperaspis binotata*, a Coccinellid Beetle Predatory on *Eulecanium nigrofasciatum* (terrapin scale)** — SIMANTON, F. L., in the *Journal of Agricultural Research*, Vol. V, No. 5, pp. 197-203, 1 Fig., Pl. XXIV-XXV. Washington, D. C. 1916.

During a good season the adults of *Hyperaspis binotata* Say destroy great quantities of *Eulecanium nigrofasciatum* Pergande. They hibernate on the bark and in the vegetable refuse at the foot of peach trees infested by terrapin scale. They emerge towards the end of April (at Mount Alto, Pa.) Mating takes place in the spring and oviposition continues until the beginning of September.

The larvae not only devour the young of the scale but also the adults. It is estimated that a single larva of *Hyperaspis* is able to destroy 90 mature scales and 3000 larvae of *Eulecanium*.

*H. binotata* is common in the whole of the territory east of the Mississippi, and extends west of this river in some states to the semi-desert region. It is most abundant on the Atlantic side, from Connecticut to Maryland.

1142 – ***Holcocera iceryaeella*, a Lepidopteran that Destroys Cochineal Insects in California.** — ESSIG, E. O., in *Journal of Economic Entomology*, Vol. 9, No. 3, pp. 369-370, Pl. 28. Concord, 1916.

During the summer of 1915 the author undertook a series of researches and observations on *Holcocera iceryaeella* (Riley) (*Blastobasis iceryaeella* Riley), a Lepidopteran which destroys cochineal insects, and which occurs in great numbers on the experimental farm of the University of California. It is not easy to establish exactly the way in which this insect is nourished

(1) See *B.* February 1913, p. 170 ; and *B.* June 1913, No. 765.

(2) See *B.* April 1915, No. 451 ; *B.* Oct. 1915, No. 1102 ; *B.* July 1916, No. 827 ; *B.* August 1916, No. 948. (*Ed.*).

and in what proportion the dead and living cochineal insects occur in its food.

Among its hosts, in addition to *Saissetia oleae* Bern (black scale) and *Icerya purchasi* Mask. (Cottony cushion scale or fluted scale) which are already known, the author cites *Lecanium persicae* Fab. (European peach scale), *Aspidiotus camelliae* Sign. (greedy scale) and *Pseudococcus bakeri* Essig (Baker's mealy bug).

The *Holcocera* larvae weave large nets on the branches of the plants, and without leaving these, they feed upon the eggs and the young individuals of the cochineal insects which pass the entrances, but the adults are never attacked.

1143 – **Birds in the Vineyards in the Region of Nîmes.** — HUGUES, A. in *Comptes rendus des séances de l'Académie d'Agriculture de France*, Vol. II, No. 17, pp. 504-508. Paris 1916.

The birds which live in vineyards in the region of Nîmes are passed in review; these birds feed upon insects and do not attack the grapes, they thus are worthy of efficient protection. The author cites in particular the ortolan (*Emberiza hortulana*), the stonechat (*Pratincola rubicola*), the wheatear (*Saxicola oenanthe*), the European bunting (*Miliaria europaea*), the crested lark (*Galerida cristata*), the short toed lark (*Alauda brachydactyla*), the common linnet (*Cannabina linota*), and the warblers. The tomtit (*Parus major*) is recorded as being especially efficient; it attacks the woolly bear caterpillars of the tiger moth (*Arctia* or *Chelonia caja* L.) and those of *Cuculus canorus*. The European night-jar (*Caprimulgus europeaus*) destroys butterflies.

Red partridges (*Perdrix rubra*) and magpies (*Pica caudata*) eat the grapes but most often the damage is done to the bordering plants. In this district in a good year about 659 625 gallons of wine are gathered in, and the losses caused by these two birds do not exceed 27 000 gallons. Fieldfares arrive in October and eat the grapes left by the grape gatherers and the gleaners, grapes which are in any case lost to the vine-grower. The golden oriole (*Oriolus galbula*) and the sparrow (*Passer domesticus*) have not caused any complaints. In conclusion, in the vineyards of lower Provence there is not a single bird that is really harmful, while there are a great many that are of use.

INSECTS INJURIOUS TO VARIOUS CROPS

1144 – **The Thermites (*Leucotermes* spp.) Harmful to Agriculture in the United States.** — SNYDER, T. E., in *United States Department of Agriculture, Bulletin* No. 333, pp. 1-32, Fig. 1-5, Pl. I-XV. Washington, D. C. 1916.

The three best-known species of termites (white ants) in the United States are: *Leucotermes flavipes* Kollar, distributed over the whole of North America, from the Pacific to the Atlantic, and from Canada to the Gulf of Mexico; *L. lucifugus* Rossi, common in Texas, Arizona, Kansas, Colorado and South California, and *L. virginicus* Banks, indigenous to Maryland and Virginia (including the district of Colombia). They cause considerable damage to the principal plants cultivated, apart from wood and other materials (e. g. paper, books).

These insects attack the stem of the cotton plant at a depth of about

3 inches below the soil and penetrate into it boring tunnels of varying dimensions ; they cut into and gnaw all the tissues to such an extent that the aerial parts of the plant often wither and die. In June and July 1910 observations were made at Lampasas, Granbury, Pearsall, Plano in Texas.

Termites also make furrows and bore holes in the surface of potato tubers, but, according to MARLATT, they confine their attacks to potatoes infected with " gale ".

Considerable damage to maize has often been recorded in North Carolina, Kansas, Tennessee and Alabama. The termite workers penetrate into the stem and only leave a thin superficial layer intact. In their work of destruction the termites generally make use of galleries bored by other insects (*Diatraea saccharalis* Fab. and *Sphenophorus maidis* Chittn.); they confine themselves to enlarging and completing these galleries, which fact does not however exclude the possibility of an attack being directed against perfectly healthy plants. In August 1908, in the plantations of Clemson College (South Carolina), 5 per cent of the stems were infested and each stem contained from 5 to 75 termites.

In the Kansas nurseries in 1909 and 1910, the termites, encouraged by the dry season, attacked the young saplings of apple trees, from 1 to 3 years old, gnawed the bark and caused the death of a great number of the trees.

In several localities in the United States, geraniums, rosetrees, jessamine, laurestinus, *Opuntia* and many other ornamental plants in hot houses and the open air alike, often suffered from the attacks of termites.

Methods of combating these pests : 1) collect and destroy the prunings of branches and all the vegetable debris in which these animals often find suitable shelter ; 2) in badly infected regions avoid the cultivation of the plants which are most liable to attack for several years and give preference to grasses ; 3) during the operation of ploughing, digging, etc., avoid burying vegetable debris in which termites can hide ; 4) in hot houses and nurseries dispense with animal manures and give the preference to chemical manures ; 5) if the plant in question is a vine proceed carefully with pruning avoiding serious lesions, and finally cover the scars with coal tar or other substances of a similar nature.

1145 - ***Pulvinaria floccifera* and *Chrysomphalus dictyospermi*, Cochineal Insects Recently Established in California.** — ESSIG, O. in *The Monthly Bulletin of State Commission of Horticulture*, Vol. V, No. 5, pp. 192-197, Fig. 65-70. Sacramento Cal., 1916.

Among the insects imported into California from other countries a certain number of cochineal insects figure, some of which cause great damage to kitchen-gardens and orchards.

*Pulvinaria floccifera* Westwood (Camellia scale) and *Chrysomphalus dictyospermi* Morgan (Dictyospermum scale) are of very recent importation.

Up to the present *P. floccifera* has only been able to establish itself in a single locality in San Jose. Here we are dealing with a cosmopolitan parasite common throughout the temperate zone, and well known in the

eastern and southern regions of Canada and of the United States. Its favourite host as its English name indicates is beyond doubt the *Camellia japonica*; then come *Euonymus* sp., *Oncidium Papilio, Calanthe natalensis Anguloa Clowesii, Lycaste Skynneri, Acalypha* sp., *Brassica verrucosa, Phaius maculatus, Coffea arabica,* and *Euonymus alatus.*

*Chrys. dictyospermi,* widely distributed over the tropical and sub-tropical regions, is also met with in the temperate zone, in hot houses and sheltered places. In California this species has been recorded from Ventura, Berkely, Marysville, and San Diego. It is mentioned as attacking *Kentia,* orchids in general, *Coelogyne cristata* and *Persea gratissima.* In other regions this cochineal insect has also been observed on *Dictyospermum album, Erythrina indica, Cycas* sp. (sago palm), *Latania* sp., on palms in general, on *Mangifera, Pandanus graminifolius, Areca triandra, Cypripedium* sp., *Dendrobium* sp., *Anthurium* sp., *Aloe Zeyheri,* tea plants, *Ficus* sp. etc.

In the Italian peninsula, in Sicily and in Spain, this insect causes serious damage to citrus plants, hence the necessity of careful supervision, so that the parasite may not extend its attacks to this group in California.

1146 – ***Chortophila cilicrura* and *Thereva* sp., Pests on Rye in Silesia, Germany.** — OBERSTEIN, in *Zeitschrift für Pflanzenkrankheiten,* Vol. 26, Fasc. 5, pp. 277-280. Stuttgart July 30, 1916.

In Silesia, during the period of vegetation of 1914 and 1915, it was observed that the winter crops were attacked by a pest which devoured the leaves from the top to the bottom in succession, almost to the foot of the plant. This damage was recorded from a vast extent of land, and although the same caused great damage in these localities, it was certain that it had not done the mischief in question. The parasite also attacked the corn, but it did more harm to the rye.

On November 22, 1915 the Experimental Station for Agricultural Botany of the Chamber of Agriculture of Silesia, received from the district of Glogau, larvae and pupae which came from three fields of rye. According to the peasants the larvae, by eating the grain immediately before and after germination, had caused great damage to the young plants which by degrees died.

After rye, lupins were grown and were also attacked. On December 11, 1915 the Station received a second consignment of pupae—there were no more larvae—which were used to identify the insect; at the beginning of February 1916 laboratory breeding experiments gave rise to males and females of a Dipteran which was identified as *Chortophila cilicrura.*

On October 17, 1915 another pest, hitherto unknown, was sent from the district of Steinau a. O. to the Station. The infected rye succeeding sarradilla had hardly germinated. The young plants were gnawed; a great number of white diptrous larvae were found in the soil which were without legs, shaped like wire-worms and with little black heads. A neighbouring rye field in which the previous crop had been oats was unattacked; the rye had germinated satisfactorily. All the rye examined was treated with

"Uspulun" before the harvest (1). About a month later only a few larvae of different sizes were found. The insect was identified as *Thereva*, but the species is not yet known. As the pest has appeared in great number in other places as well, the writer decided to study it in detail.

1147 – **The Potato Ladybird Beetle (*Epilachna dregei*), a Coleopteran Pest on Potatoes and other Plants in South Africa.** — GUNN, D. in *Union of South Africa, Department of Agriculture, Division of Entomology*, No. 6, pp. 1-7, 1 Pl. Pretoria, 1916.

This insect, which is now spread over the whole of South Africa, attacks countless cultivated and wild plants, being especially injurious to the potato.

On an average, in both the first and the second generations, the life cycle of *Epilachna dregei* occupies 49 days; in the first generation its minimum length is 41 days, and in both the maximum is 57 days. The duration of each period is as follows:

| | |
|---|---|
| Incubation | 7 to 11 days |
| Larval existence | 28 to 36 days |
| Pupal existence | 6 to 10 days |

The eggs are laid in little heaps on the under surface of the leaves of the host; when hatched the larvae remain in groups until the first change of skin, after which they spread over the whole plant, eating the foliage. The adults finish this work of destruction, for they leave nothing but the veining intact, so that the plant soon withers and dies. During the summer of 1913, about 18 acres of potatoes were destroyed on a single estate near Johannesburg.

Applications of lead arseniate (about 3 lbs. in 48 gallons of water) are suggested as soon as the larvae appear as a means of prevention.

Besides potatoes, this *Epilachna* also attacks pumpkins, cucumbers, spinach, turnips, radishes, melons, beans and some of the *Solanums* which grow in the gardens and fields.

1148 – **The Clover Leafhopper (*Agallia sanguinolenta*), an Hemipteran Pest on Leguminous Forage Plants in the United States.** — GIBSON, E. H., in *United States Department of Agriculture, Farmer's Bulletin*, No. 737, pp. 7-8, Fig 1-5. Washington, D. C., 1916.

*Agallia sanguinolenta* damages the Leguminous plants used for forage, more especially lucerne and clover, in various ways. Numerous specimens (sometimes as many as 600) collect on a single plant, they pierce the epidermis of the leaf stalk and extract some of the juice from the tissues, so that the most delicate branches wither, and the new shoots which are poorly nourished develop badly. In addition, the females, by laying their eggs at a considerable depth in the peridermis and parenchyma, provoke the formation of galls which check the normal development of the plant.

Preventive measures: 1) during the winter burn the vegetable debris

(1) See *B.* August 1916, No. 938. (*Ed.*).

and weeds in the fields, along the roads and in the uncultivated steppes where the insects hibernate ; 2) if the attack is very violent cut the forage earlier to deprive the voracious insect of its favourite food ; 3) catch the insect by means of an ordinary hopperdozer.

1149 – **The Pepper Tree Caterpillar (*Bombycomorpha pallida*), a Lepidopteran Pest on the Pseudo-Pepper Tree (*Schinus Molle*) in the Transvaal.** — DUNN, D. in *Union of South Africa, Department of Agriculture, Division of Entomology*, No. 4, pp. 1-10, 1 Pl. Pretoria, 1916.

During the last few summers considerable damage was caused to *Schinus Molle* in Pretoria and the surrounding country by the larvae of *Bombycomorpha pallida* Dist., which feed upon the leaves of this tree. The eggs which are stuck together by a gelatinous substance form a coating round the branches of the plant host 2 or 3 cms. long. The larvae which are all hatched out at the same time have a markedly gregarious tendency, and, having devoured the leaves on which they were born, they prefer to destroy each other, instead of separating and emigrating. Thus cannibalism occurs and brings about the destruction of the smallest and feeblest specimens. Finally, having exhausted all the possible resources, the larvae emigrate in groups of five or six to other parts of the tree and finish stripping off its leaves.

As a means of artificial resistance the following may be used : 1) gathering the branches on which the larvae occur when all of them may easily be destroyed ; 2) applications of lead arseniate (about 3 lbs in 48 gallons of water) ; 3) when the larvae are mature they abandon their host and crawl down to the ground, looking for a suitable place in which to pupate : if pieces of cloth, or other material, are placed round the stem the larvae can easily be caught as they emigrate in great numbers. Thus future infection can be checked.

1150 – ***Pegomyia hyoscyami*, a new Dipteran in the United States. Harmful to Spinach and other Plants** (1). — COREY, E. N. in *Journal of Economic Entomology*, Vol. 9, pp. 372-375, Fig. 21. Concord, N. H., 1916.

The appearance of an insect which is new to the United States has just been recorded. It is *Pegomyia hyosciami* Panz. whose larvae bore holes and galleries in the thickness of the leaves of *Spinacia oleracea*, *Chenopodium album* and *Amaranthus retroflexus*.

The female lays her eggs in a regular row on the under surface of the leaves ; the incubation lasts about four days ; the larvae feed on the leaf tissue and leave only the veining intact. The larval period lasts from 15 to 17 days, the pupal state only from 14 to 20 days.

The only known parasite is *Opius foveolatus* Ashm. A 5,6 or 7 per cent solution of barium chloride has been successfully used as a means of destroying the pest.

(1) See also *B.* March 1912, No. 585, and *B.* Feb. 1913, No. 196 (*Ed.*).

1151 – ***Dacus vertebratus*** **(cucumber and vegetable marrow fly), a Dipteran which is Harmful to Cucurbitous Plants in South Africa.** — GUNN, D. in *Union of South Africa, Department of Agriculture, Division of Entomology*, No. 9, pp. 2-6, Pretoria, 1916.

*Dacus vertebratus* causes considerable damage to the cucumbers pumpkins, water melons and in general to all the Cucurbitous plants that are cultivated in South Africa The female lays her eggs, 10 to 25 at the same time, in the rind of the fruit : the incubation period is from 2 to 4 days. The larvae bore long galleries in the rind, which grows soft and shrivels up, they also bore in the pulp which becomes a semi-liquid mass with a rancid smell. The larvae when they are mature crawl into the ground where they pupate. The adults come out after 5 or 7 days and live from 1 to 5 months

It is advisable as a means of control to spread over the plants in need of protection sweet substances (sugar etc.) of which the insect is very fond, mixed with poison. The following formulae have been successfully employed :

| | | |
|---|---|---|
| 1) Lead arseniate (in a paste) | 3 | oz. |
| Molasses | 2 | lbs. |
| Water | 2 | gallons |
| 2) Lead arseniate (in a paste) | 3 | oz. |
| Molasses | 2 | lbs. |
| Glycerine | 3 | oz. |
| Water | 2 | gallons. |
| 3) Lead arseniate (in a paste) | 2 | oz. |
| Sugar | 2 ½ | lbs. |
| Water | 2 | gallons. |

When the weather is warm and dry the applications must be made every 12 to 14 days. But if the weather is wet they should be renewed as often as possible immediately after the rain.

1152 – **Coleoptera Harmful to Fruit and to Flowering Plants Cultivated in South Africa.** —GUNN, D. in *Union of South Africa Department of Agriculture, Division of Entomology*, No. 8, pp. 1-6, 1 pl. Pretoria, 1916.

In South Africa in the summer several *Coleoptera* cause serious damage to the fruit trees and flowers in the orchards and gardens. Their favourite host is the peach tree, whose harvest they spoil to the extent of about 20 to 50 per cent, by attacking the ripe and the ripening fruit. Among other hosts are rose trees, dahlias, pears, plums, nectarines, apricots, figs, oranges (buds) and vines (leaves).

The species most often observed in the neighbourhood of Pretoria during the period 1913 to 1914 were the following : *Rhabdotis antica*, *Pachnoda, impressa*, *P. cincta*, *P. carmelita*, *Heterorrhina flavomaculata*, *Plaesiorhina recurva* var. *plana*, *Oxythyrea marginata* and *O. dysenterica*.

As a method of control the direct capture of the adults is advised ; this is effected by means of special butterfly nets fastened to the ends of long canes which can be used easily even by the natives.

1153 – ***Philagathes laetus*** **a Coleopteran Pest on the Peach Tree in South Africa.** — GUNN, D. in *Union of South Africa, Department of Agriculture, Division of Entomology*, No. 8, pp. 7-8, 1 Fig. Pretoria, 1916.

*Philagathes laetus* is for the first time recorded as harmful to peach trees in South Africa.

The adult attacks the ripe or ripening fruits causing lesions of varying extent. It may easily be caught by means of a butterfly net.

1154 – **The Plum Slug Caterpillar (*Parasa latistriga*), a Lepidopteran Pest on various Trees in South Africa.** — GUNN, D. in *Union of South Africa, Department of Agriculture Division of Entomology*, No. 7, pp. 1-7, 1 Pl Pretoria, 1916.

This insect, which is widely distributed throughout South Africa, attacks apple trees, peachs, plums, nectarines, and oaks in the neighbourhood of Pretoria, and it is certain that further work will increase the list of its plant hosts.

The whole life-cycle of *Parasa latistriga* is completed in 93 days in the case of the first generation, and in 270 days in the case of the second. The eggs are laid in groups on the under surface of the leaves. The larvae which hatch out of them feed on the leaves and leave nothing but the veining; they then separate and emigrate to all parts of the plant.

Among the parasites of this insect are some of the *Hymenoptera* belonging to the family *Chrysididae*, whose action is very restricted. Effective preventive measures to be adopted against these larvae are applications of lead arseniate in a paste or copper arsenio-acetate mixed with lime.

1155 – **Concerning the Fruit Fly (*Ceratitis capitata*), in Tunis** (1). — GUILLOCHON, L. in *Comptes Rendus des Séances de l'Académie d'Agriculture de France*, Vol. II, No. 16, pp. 473-477. Paris, 1916.

The writer gives an account of observations which he made in the Tunis Experimental Garden on *Ceratitis capitata* (the Mediterranean fruit fly of the Americans). The first mention of this fly dates back to 1898; the account given shows that the damage occasioned by the insect was confined to slow ripening peaches, which points to the conclusion that *Ceratitis* in the pupal state only develops after hibernation, at an average temperature of 20 C° higher than that required for the ripening of early varieties of American peaches.

The immunity is not however entirely a question of varieties, as a matter of fact the early varieties that ripened late owing to transplantation were attacked like the late varieties.

The amount of damage done increased, and in July and August the writer recorded the presence of larvae on peaches, apricots, kakis and aberias; in August, September and October on pears and apples, and finally in December and January on oranges more especially on mandarins.

Henneguy's plan of sticking a certain number of fruits on to each tree with honey to act as traps, was followed without success, as was Trabut's of making traps with a solution of colophony in alcohol with the addition of castor oil. The writer then decided to have the fallen fruit picked up every

(1) See also *B.* May 1916, No. 604.

day and even to shake the trees in order to bring down the infected fruit and to burn it all.

In 1910 a few specimens of *Ceratitis* were reared in entomological boxes and it was observed that the mature larvae free themselves from the opening of the fruit and bury themselves (August 19). Ten days later (August 29) five perfect insects 2 males and 3 females were winged ; the next day (August 30) there were 2 new females. An almost ripe peach which was placed in the box caused great agitation : the flies went backwards and forwards, on August 31 the females crawled over the fruit, by the first of September 2 of them were dead, and 3 others on the second. Experiments made by rearing them on pears and apples gave the same results, with a rather longer incubation period (21 days instead of 10).

On the growing fruit the larvae collect in the part of the mesocarp next to the stone, and in fruits like oranges in the spaces next to the seeds. In autumn when the temperature falls, *Ceratitis* pupates, and passes the winter in the pupa at the foot of the tree a little way below the surface of the ground.

The insect is dangerous in so far as it adapts itself readily to different climates ; it is recorded from the West Indies, which should be its original home, in the Islands of Hawai, in Oceania, in the regions around the Mediterranean, and in certain comparatively hot summers, in the neighbourhood of Paris (1). It lives at the expense of fruits which are far removed from one another and which ripen at very different times.

BACK and PEMBERTON of the United States Department of Agriculture record as parasites of the *Ceratitis* introduced by SILVESTRI : *Galesus silvestrii, Dirhinus giffardii*, *Opius humilis ; Syntomosphyrum indicum* has also been recorded (2).

## INJURIOUS VERTEBRATES.

1156 **Cottontail Rabbits (*Sylvilagus* spp.) in the United States.** – LANTZ, D. E. in *United States Department of Agriculture. Farmer's Bulletin* No. 702, pp. 1-12. Fig. 1-5. Washington, D. C., 1916.

Over a great part of the United States cottontail rabbits (Gen. *Sylvilagus*) cause more or less extensive damage in cultivated land, especially during the winter, when their ordinary pastures are covered with snow and they are driven to attacking trees (especially apples) by gnawing them and tearing off the bark ; in this way they are often responsible for the death of fruit trees.

The bulletin in question contains instructions for combating this pest, legal regulations regarding hunting in the various States, formulae for the preparation of poisoned baits, and descriptions of two traps (Wedhouse and Walmsley) used successfully for catching these rodents.

(1) See also *B.* Sept. 1915, N. 993.
(2) See also *B.* Feb. 1914, No. 190. (*Ed.*).

ALFREDO RUGGERI, *gerente responsabile*.

(c) Publications of the Bureau of Agricultural Intelligence and Plant Diseases.

1. LE SERVICE DE PROTECTION CONTRE LES MALADIES DES PLANTES ET LES INSECTES NUISIBLES DANS LES DIVERS PAYS (The Present Organization of the Services for the Control of Plant Diseases and Insect Pests in the Different Countries). (1914, 350 pages, 4to) . . . . . Frs. 4.00
2. PRODUCTION ET CONSOMMATION DES ENGRAIS CHIMIQUES DANS LE MONDE (Production and Consumption of Chemical Manures in the World). (Second Edition, 1914, 162 pages, 5 diagrams, 2 maps, 16mo) . . . . . » 3.50
3. LA LUTTE CONTRE LES SAUTERELLES DANS LES DIVERS PAYS (The Campaign against Locusts in Various Regions) (1916, 188 pages, 16mo) . . . . . » 3.50

(d) Publications of the Bureau of Economic and Social Intelligence.

1. L'ACTIVITÉ DE L'INSTITUT INTERNATIONAL D'AGRICULTURE DANS LE DOMAINE DE LA COOPÉRATION, DE L'ASSURANCE ET DU CRÉDIT AGRICOLES (The Work of the International Institute of Agriculture in the Field of Agricultural Co-operation, Insurance and Credit). (In French, German and Italian). (1912, 34 pages, 16mo) . . . . . » 0.50
2. MONOGRAPHS ON AGRICULTURAL CO-OPERATION IN VARIOUS COUNTRIES. Vol. I. (1911, 451 pages, 16mo). (In English and French) . . . . . » 3.50
   Do. Vol. II. (1915, 213 pages 16mo). (In English and French) . . . » 3.50
3. AN OUTLINE OF THE EUROPEAN CO-OPERATIVE CREDIT SYSTEMS (Second Edition, 1913, 72 pages, 16mo) . . . . . » 0.50
4. L'ORGANISATION DE LA STATISTIQUE DE LA COOPÉRATION AGRICOLE DANS QUELQUES PAYS (The Organization of the Statistics of Agricultural Co-operation in Certain Countries). (1911, 163 pages, 8vo) . . . . . 1.50
5. L'ASSURANCE-GRÊLE DANS QUELQUES PAYS ET SES PROBLÈMES (Insurance against Hail in Some Countries and its Problems). (1911, 110 pages, 8vo) . . » 1.50
6. AGRICULTURAL CREDIT AND CO-OPERATION IN ITALY: SHORT GUIDE TO RURAL CO-OPERATION IN ITALY (in English, 35 pages and in Italian 34 pages, 16mo) » 0.25

(e) Other publications.

1. L'INSTITUT INTERNATIONAL D'AGRICULTURE, SON ORGANISATION, SON ACTIVITÉ, SES RÉSULTATS (The International Institute of Agriculture, its Organization, Activity, and Results). (1914, 31 pages, in English, French and Italian; illustr.) Frs. 1 —
2. LOUIS-DOP: LE PRÉSENT ET L'AVENIR DE L'INSTITUT INTERNATIONAL D'AGRICULTURE (CONFÉRENCE) (Present and Future of the International Institute of Agriculture) (Address). (1912, 60 pages, 16mo). . . . . » 1 —
3. SANTIAGO ALDONATE: EL INSTITUTO INTERNACIONAL DE AGRICULTURA Y SU IMPORTANCIA PARA LA AMÉRICA LATINA, EN ESPECIAL PARA CHILE (Conferencia) (The International Institute of Agriculture and its Importance for Latin America, especially for Chile). (1913, 30 pages, 16mo) (Address). . . . » 1 —

## II. Publications not for Sale.

1. CONFÉRENCE INTERNATIONALE DE 1905 POUR LA CRÉATION D'UN INSTITUT INTERNATIONAL D'AGRICULTURE (International Conference of 1905 for the Foundation of an International Institute of Agriculture), (1905, 254 pages, 4to).
2. ACTES DES ASSEMBLÉES GÉNÉRALES DES ANNÉES 1908, 1909, 1911, 1913 (Proceedings of the General Assemblies of 1908, 1909, 1911 and 1913). (Four volumes, 8vo., one 16mo).
3. PROCÈS-VERBAUX DU COMITÉ PERMANENT DES ANNÉES 1908, 1909, 1910, 1911, 1912, 1913 (Procès-verbaux of the Permanent Committee, 1908, 1909, 1 10, 1911. 1912, 1913, 1914 and 1915). (Five volumes, 8vo., and two 16mo).
4. RAPPORTS ET ETUDES DU BUREAU DE LA STATISTIQUE GÉNÉRALE (Reports and Studies of the Bureau of General Statistics). (1911, 260 pages, 8vo).
5. THE SCIENCE AND PRACTICE OF FARMING DURING 1910 IN GREAT BRITAIN. (646 pages, 16mo).
6. ETUDE SUR LES RECENSEMENTS DE LA POPULATION AGRICOLE, LES SALAIRES DE LA MAIN-D'ŒUVRE RURALE ET LES COURANTS D'ÉMIGRATION DANS LES DIFFÉRENTS ETATS (Study on the Census Returns of the Agricultural Population, the Wages of Rural Labour, and the Currents of Emigration in the Several Countries). (1912, 150 pages, 8vo).

NOTE.

(1) All subscriptions and remittances for the Institute's publications should be made either directly to the International Institute of Agriculture, Rome, or to the principal booksellers.

For Great Britain and Ireland, subscriptions to the Bulletins 1, 2, 3 and remittances for the Year Books are also received at the Board of Agriculture and Fisheries, 4 Whitehall Place, London. S. W.

(2) The prices quoted include packing and carriage. All our publications are despatched on receipt of postal order or international reply coupons.

(3) Despatch is made with every care and punctuality, but unregistered volumes travel at consignee's risk.

(4) To avoid miscarriage, for which the Institute does not hold itself responsible, an additional amount of 25 centimes for registration should be sent with each order.

(5) In case of change of address, the subscriber is requested to notify the Publishing of Bureau the Institute, forwarding address label.

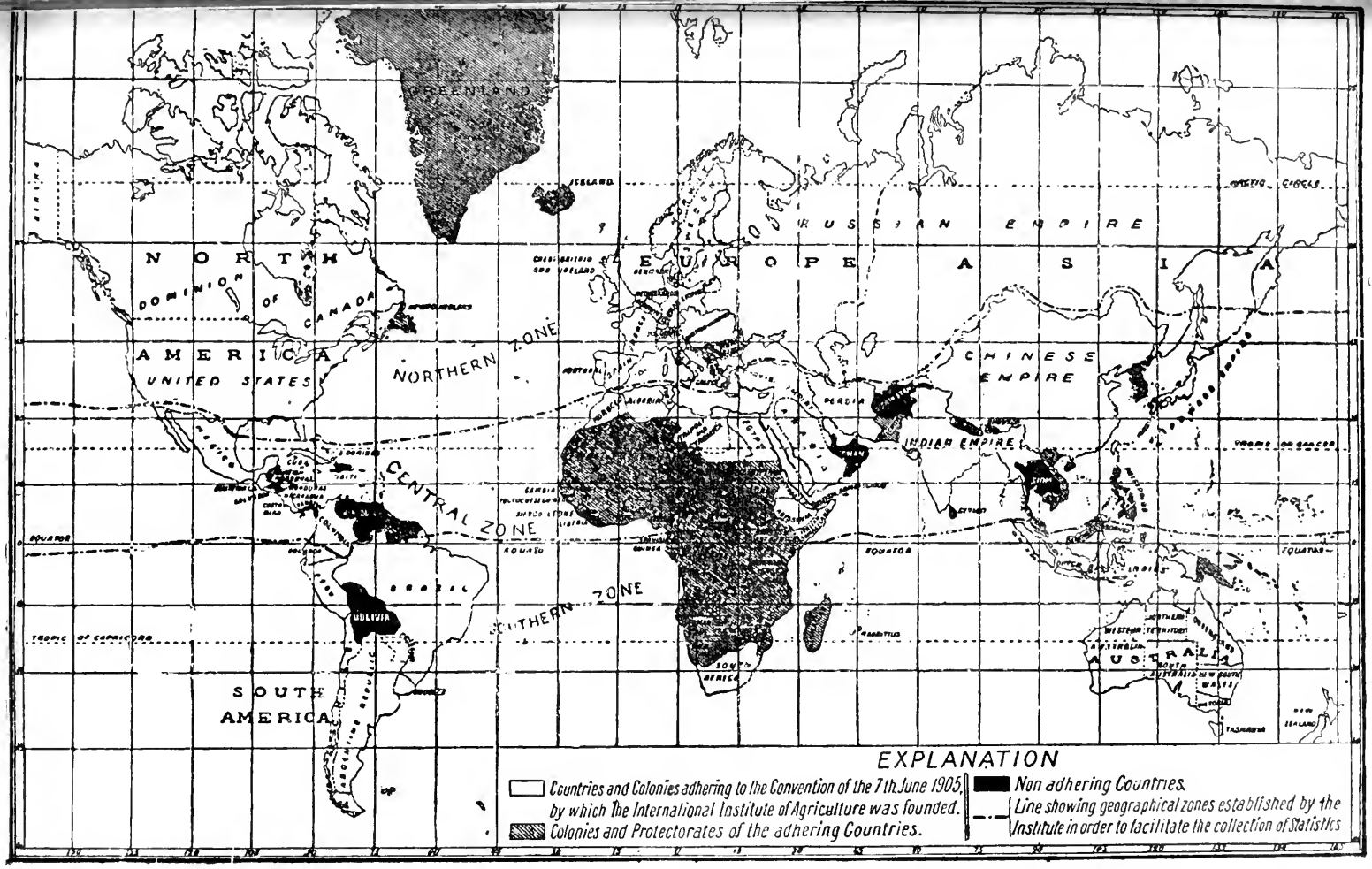
GREENLAND
ICELAND
NORTH AMERICA
DOMINION OF CANADA
UNITED STATES
NORTHERN ZONE
CENTRAL ZONE
SOUTHERN ZONE
SOUTH AMERICA
BOLIVIA
BRAZIL
EUROPE
ASIA
RUSSIAN EMPIRE
CHINESE EMPIRE
PERSIA
INDIA EMPIRE
SIAM
SOUTH AFRICA
AUSTRALIA
EQUATOR
TROPIC OF CAPRICORN
EXPLANATION
Countries and Colonies adhering to the Convention of the 7th June 1905, by which The International Institute of Agriculture was founded.
Colonies and Protectorates of the adhering Countries.
Non adhering Countries.
Line showing geographical zones established by the Institute in order to facilitate the collection of Statistics

INTERNATIONAL INSTITUTE OF AGRICULTURE
BUREAU OF AGRICULTURAL INTELLIGENCE AND PLANT DISEASES

# INTERNATIONAL REVIEW OF THE SCIENCE AND PRACTICE OF AGRICULTURE

MONTHLY BULLETIN
OF AGRICULTURAL INTELLIGENCE AND PLANT DISEASES

YEAR VII - NUMBER 11
NOVEMBER 1916

ROME
PRINTING OFFICE OF THE INSTITUTE
1916

# Publications of the International Institute of Agriculture.

## I. Publications for Sale.

### A. — *MONTHLY OR WEEKLY PUBLICATIONS.*

| | Annual subscription | Single number |
|---|---|---|
| 1. INTERNATIONAL CROP REPORT AND AGRICULTURAL STATISTICS (*Bulletin of Agricultural and Commercial Statistics*), published monthly in English, French, German, Spanish and Italian, 16mo | Frs. 6 | 0,60 |
| 2. INTERNATIONAL REVIEW OF THE SCIENCE AND PRACTICE OF AGRICULTURE (*Monthly Bulletin of Agricultural Intelligence and Plant Diseases*), published monthly in English, French, German, Spanish and Italian. (Each number consists of about 180 pages, 16mo) | » 18 | 2 — |
| 3. INTERNATIONAL REVIEW OF AGRICULTURAL ECONOMICS (*Monthly Bulletin of Economic and Social Intelligence*), published monthly in English, French, German, Spanish and Italian. (Each number consists of about 150 pages, 16mo) | » 18 | 2 — |
| Subscription to all three Bulletins | » 36 | |

### B. — *HALF-YEARLY PUBLICATIONS.*

| | | |
|---|---|---|
| 1. Statistical Notes on Cereals. Studies on yield, trade, consumption and prices, with rates of ocean freight | Frs. | 1,50 |
| 2. The International Movement of Fertilisers and Chemical Products useful to Agriculture | » | 1,50 |

### C. — *YEAR BOOKS.*

| | | |
|---|---|---|
| 1. ANNUAIRE INTERNATIONAL DE STATISTIQUE AGRICOLE POUR 1910 (International Year Book of Agricultural Statistics, 1910). (1912, XLVIII+327 pages, 16mo) | Frs. | 5 — |
| Do. Vol. II, Years 1911-1912. (1914, XXXIV + 624 pp. 16mo) | » | 5 — |
| Do. Vol. III, Years 1913-1914. (1915, XLIV + 788 pp. 16mo) | » | 5 — |
| 2. ANNUAIRE INTERNATIONAL DE LÉGISLATION AGRICOLE, 1st. Year, 1911, (International Year Book of Agricultural Legislation, 1911). (1912, 1,122 pages, 16mo) | » | 10 — |
| Do. 2nd Year, 1912. (1913, 994 pages, 16mo) | » | 10 — |
| Do. 3rd Year, 1913. (1914, 1,114 pages, 16mo) | » | 10 — |
| Do. 4th Year, 1914 (1915, LXVIII + 1,020 pages, 16mo) | » | 10 — |
| Do. 5th Year, 1915 (1916, LXXVXVI + 1,460 pages, 16mo) | » | 10 — |

### D. — *OTHER PUBLICATIONS.*

#### (*a*) Publications of the Library.

| | | |
|---|---|---|
| 1. CATALOGUE DE LA BIBLIOTHÈQUE. ANNÉE 1909 (Catalogue of the Library, 1909). (356 pages, 8vo) | Frs. | 3 — |
| 2. LISTE DES REVUES ET JOURNAUX RÉGULIÈREMENT REÇUS PAR L'INSTITUT, 1913 (List of Reviews and Papers regularly received by the Institute, 1913). (84 pages, 16mo) | » | 0.50 |

#### (*b*) Publications of the Bureau of Statistics.

##### (1) *Various publications*

| | | |
|---|---|---|
| 1. L'ORGANISATION DES SERVICES DE STATISTIQUE AGRICOLE DANS LES DIVERS PAYS, Vol. I (The Organization of the Agricultural Statistical Services in the Different Countries, Vol. I). (1910, 446 pages, with tables in addition to the text, 16mo) | » | 4 — |
| Do. Vol. II. (1913, 146 pages, 16mo) | | 2 — |
| 2. RECUEIL DE COEFFICIENTS POUR LA CONVERSION DES POIDS, MESURES ET MONNAIES AU SYSTÈME MÉTRIQUE DÉCIMAL (Collection of Coefficients for the Conversion of Weights, Measures, and Money Values into the Decimal Metric System). (1914, 84 pages, 32mo) | » | 1 — |

##### (2) *Monographs* (*New Series*).

| | | |
|---|---|---|
| 1. L'ORGANISATION DE LA STATISTIQUE DU COMMERCE EXTÉRIEUR EN ITALIE (Organisation of the Statistics of Foreign Trade in Italy) (1913, 190 pages 16mo) | » | 2 — |
| 2. LE MARCHÉ DES CÉRÉALES D'ANVERS (The Antwerp Corn Market) (1913, 62 pages, 16mo) | » | 1 — |
| 3. LES BOURSES DES PRODUITS AGRICOLES DE HAMBOURG ET BUDAPEST (The Agricultural Produce Exchanges of Hamburg and Budapest). (1913, 55 pages, 16mo) | » | 1 — |
| 4. NOTES SUR LES STATISTIQUES DU COMMERCE EXTÉRIEUR DANS LES DIFFÉRENTS PAYS: Publications Statistiques, Territoires, Sortes de Commerce, Provenances et Destinations des Marchandises (Notes on the Statistics of Foreign Trade in the Different Countries: Statistical Publications, Territory, Kinds of Trade, Source and Destination of Goods). (1914, 96 pages, 16mo) | » | 2 — |
| 5. LA RÉPARTITION AGRICOLE DES TERRITOIRES DES DIFFÉRENTS PAYS (Areas under Crops in the Different Countries). (1914, 310 pages, 16mo) | | 5 — |

##### (3) *Other publications.*

| | | |
|---|---|---|
| UMBERTO RICCI: LES BASES THÉORIQUES DE LA STATISTIQUE AGRICOLE INTERNATIONALE (Theoretical Bases of International Agricultural Statistics), (1914, 314 pages, 16mo) | » | 5 — |

INTERNATIONAL INSTITUTE OF AGRICULTURE
BUREAU OF AGRICULTURAL INTELLIGENCE AND PLANT DISEASES

# INTERNATIONAL REVIEW OF THE SCIENCE AND PRACTICE OF AGRICULTURE

## MONTHLY BULLETIN OF AGRICULTURAL INTELLIGENCE AND PLANT DISEASES

YEAR VII - NUMBER 11
NOVEMBER 1916

ROME
PRINTING OFFICE OF THE INSTITUTE
1916

## III. — LIVE STOCK AND BREEDING.

### *a*) GENERAL.



### *b*) SPECIAL.



## IV. — FARM ENGINEERING.

## V. — RURAL ECONOMICS.



## VI. — AGRICULTURAL INDUSTRIES.



# PLANT DISEASES.

## II. — DISEASES NOT DUE TO PARASITES OR OF UNKNOWN ORIGIN.



## III. — DISEASES DUE TO FUNGI, BACTERIA AND OTHER LOWER PLANTS.

## IV. — Weeds and Parasitic Flowering Plants.



## V. — Injurious Insects and other Lower Animals.



The Bureau assumes no responsibility with regard to the opinions and the results of experiments outlined in the Bulletin.

The Editor's notes are marked (*Ed.*).

FIRST PART.

# ORIGINAL ARTICLES

## Organisation of Agricultural Services in the French Zone of the Empire of Morocco.

by

M. MALET

*Director of Agriculture, Commerce and Colonisation.*

*General Residence of the French Republic in Morocco.*

In Morocco the agricultural question owes its importance to the fact that in an average year 98 per cent of the total exports consist of the produce of the soil.

At the same time that the French occupation was gaining for the native tribes that security which is necessary for all permanent agricultural work, the Intelligence Board (a military organisation) was endeavouring to give a fresh impetus to agriculture by the establishment of demonstration fields and nurseries, by seed distribution etc. Appreciable results were obtained, but as these initial efforts could only be applied on a restricted scale, they were insufficient to meet the many needs which arise from immigration and the extension of foreign business.

Agricultural colonisation involved the cooperation of European and native elements in the work of economic improvement and the union of districts that tribe rivalry had hitherto kept in isolation. Under these circumstances, it was inevitable that various technical and administrative problems should arise. Consequently it was necessary to form a central organisation attached to the General Residence in order to secure some measure of uniformity and permanence in matters connected with agriculture and stock breeding. The Agricultural Board was established on April 1st 1913 and its general programme may be analysed as follows:

1) To study the natural conditions of plant and animal production ;

2) to encourage improvement in native agriculture to the same degree as in neighbouring colonies ;

3) to advise and aid the colonists ;

4) to prepare the way for future progress by scientific investigation ;

5) to study the problems of agricultural hydraulics and improvement of land ;

6) to aid in the organisation of professional agricultural teaching ;

7) to establish administrative relations with the Chambers of Agriculture and with the Agricultural Societies and Committees.

In order that this programme might be more efficiently carried out the Agricultural Board was extended and developed in 1915 into the Department of Agriculture, Commerce and Colonisation, which now includes branches for Agriculture, Stockbreeding, Hydraulics and Agricultural Improvements, Colonisation, Research and Education, and also the official chemical laboratory for the analysis of samples.

The Agricultural branch, with which we are specially concerned here, includes a central board and a regional technical board.

*Central Board.* — This consists of :

1) an administrative staff which is concerned with office work and the study of legislative measures and regulations for the protection and improvement of agriculture.

2) a supervising staff which directs and controls the action of the regional board.

*Regional Technical Board.* — This consists of a technical staff drawn from the ranks of the inspectors and sub-inspectors of agriculture, the agricultural advisers and head and under gardeners.

Inspectors and sub-inspectors of agriculture are stationed in the chief centres (Mequinez, Casablanca, Mazagan, Marakesh), and they act as technical advisers to the military and civilian governing bodies, forming a connecting link with the Central Board in agricultural matters. These inspectors continually travel about the country and so they are able to take part in enquiries and surveys, to gather on the spot much useful information about the economic possibilities of their own areas, to carry out constant propaganda work and to spread information among the natives. They also instruct the colonists and advise them how to set to work, and finally they give to the experimental gardens and demonstration fields a bent which is practical and in line with the interests of the districts for which they have been established.

Every country which is desirous of making agricultural progress nowadays considers it necessary to establish experimental gardens specially adapted for teaching purposes. In West Morocco it has been possible to set up three such gardens at Rabat, Mequinez and Marakesh.

The garden at Rabat has been in working order since April 1st 1914 ; at first it was about 10 acres in extent, but it has since been granted a further 12 ½ acres. The work of this station is chiefly devoted to kitchen garden and fruit cultivation. These are already among the chief resources of the immediate neighbourhood of Rabat and the coast region, and their importance promises to be still greater in the future. In ad-

dition to this, experiments are being made on the growing of cotton, Riga flax, ramie, castor oil etc. Special attention has also been given to the building up of nursery collections which already include a fairly large number of varieties of fruit, forest and ornamental trees: Algerian olives eating grapes, hybrid vines from the Montpellier School, apricots, peaches, plums, apples, pears, walnuts, bananas, willows and screen-plants, etc. obtained from South France, Algeria, Tunis and Spain.

The Mequinez garden covers an area of 50 acres and was started in October 1914; on July 1st the same year the Marakesh station, 75 acres in extent, was placed at the disposal of the Agricultural Board. These two stations are given over to the production on a large scale of better varieties of fruit and woodbearing trees, of local or foreign origin. It has been possible to distribute a certain number of plants to the natives, who are the first to recognise the value of the extension of tree growing. Both gardens, also carry out experiments with commercial plants used in native industries (textile plants, essential oil plants etc.)

Two Experimental Farms are being set up, one, situated at the Fez gates, is 1 250 acres in extent; the other, about 7 ½ miles from Mazagan, covers 3 000 acres. They will begin by working along the lines of the present agricultural campaign, and will be able to deal with the larger agricultural problems which will present thenselves in connection with future colonisation and which would be outside the scope of the stations at Rabat, Mequinez and Marakesh. The work will include cereal selection for increase in yield and greater resistance to disease, the study of forage and commercial plants, questions connected with the working of the soil, utilisation of water, employment of machines, improvement of live stock employment and education of the labourer. Such problems as these can only be efficiently dealt with where sufficient land is available and where the work is carried out methodically and steadily under the conditions and with the resources that are available on an ordinary farm.

*Meteorology.* — A knowledge of the climatic characteristics of the country is of capital importance and the value of methodically registered observations has been recognised by the Department of Agriculture, which has already established 45 meteorological stations in Morocco, while another dozen are now being set up. The observations already made have been worked out at Rabat and issued in the official Bulletin, and they indicate the most important features of the climatology of this region.

The network of stations will be completed as soon as circumstances permit and will ultimately include:

1) a central station at Rabat, fully equipped with the best apparatus;

2) a well-equipped station in each natural district, supervised by the Inspector of Agriculture;

3) smaller stations provided with a certain number of instruments;

4) observation posts for the special purpose of measuring rainfall and temperature.

*Improvement of native agriculture.* — It will be a work of time to study the conditions under which various crops and methods of tillage, which have already been proved successful in other countries under similar conditions, can be introduced into Morocco. Organised agricultural experiments were begun at once but several years must elapse before the results are available. It was, therefore, of immediate importance to introduce to the native population simple and practical improvements in the methods of cultivation, most of which are in use in neighbouring colonies. This work has dealt with the pruning of fruit trees, especially the olive, in the regions of Mequinez, Fez and Rabat. The native proprietors have repeatedly shown how great an interest they take in our demonstrations and how much they wish for the continuation of the teaching, of which they begin to see the utilitarian value. With such good will and aptitude on the part of the scholars, associations of pruners and grafters will soon be formed, who will in their turn spread the better methods. In the same way it has been possible to begin to combat the sooty mould of the olive, which is so widely spread in Morocco.

Mechanical mowers, seed sorters and winnowing machines have been placed at the disposal of the different Regions in order to familiarise the native with the use of these implements, which are easily worked and are not expensive. The spread of the practice of cutting and drying the hay would bring about a great improvement in the rural economy of Morocco, where the grass is left to dry uncut without profiting anyone. By the use of seed sorters the natives learn the advantages of sowing large uniform seeds, free from weed seeds ; they are also taught how to prevent the smut or bunt of cereals by immersing the grains in copper sulphate solution.

*Cattle Breeding.* — The cattle breeding problems are closely allied to those which arise in the crop production ; consequently they have been entrusted to a Board under the immediate authority of the Director of Agriculture, Commerce and Colonisation, with the exception of those questions which concern army horses, which are dealt with by the Metropolitan Board of Studs and Army Remounts. At Casablanca, under the chief of the Board, a bacteriological veterinary Laboratory is prepared to undertake scientific research on parasitic and other diseases.

The Board of Regional Inspection has a veterinary surgeon in several centres, i. e. Mechra-bel-Ksiri, Mequinez, Fez, Settat, Marakesh ; these veterinary surgeons make frequent rounds for study and enquiry, which give them the opportunity of coming into close relations with the agricultural population and of encouraging better methods of stock management. Epizootic diseases are also under their control, and in co-operation with the municipal veterinary surgeons in the urban centres, the Board provides the Sanitary police for the interior of the country. The inspection of animals and animal products of foreign origin is carried out

at the ports by veterinary surgeons provided with special powers and remunerated by visiting and quarantine fees.

The chief steps that have been taken up to the present have dealt with the formation of forage reserves, the establishment of watering places in the chief cattle districts and along the main transport routes, and the building of shelters for the animals. Restrictions have been imposed on slaughtering, so that cows may not be killed under eight years and ewes under five years and steps have been taken against epizootic maladies. Premiums have been offered for cattle breeding, and facilities have been provided by the introduction of picked breeding stock into the country. The formation of a Stud-book and Herd-book is also under consideration.

An ostrich farm exists at Mequinez under the direction of the Veterinary Inspector of the Region.

*Laboratory of Agricultural and Industrial Chemistry.* — This was established at Casablanca in 1914 and is chiefly concerned with the suppression of fraud and adulteration in food and agricultural products. Even at the present stage of its development this Laboratory has made a useful contribution to the work of the Experimental Stations and Gardens, and this contribution will be still greater in the future.

*Hydraulics and Land Improvement.* — This Board is in process of formation and will deal with questions of drainage, the best use of water for agricultural purposes etc. The draining of the Merdjas (marshes) which covêr a great part of Morocco will bring into use much land of first class quality.

*Research and Education.* — This branch was at first autonomous, but was united to the Agricultural Board at the time of the transformation into the Department of Agriculture, Commerce and Colonisation. This union was essential because in Morocco (as also in Algeria, Tunis, and Indo-China), agricultural production plays such a great part in affairs that a natural connection has arisen between agricultural and commercial interests, calling for the centralisation of the administrative study of the questions concerned. The Board has Regional Economic Bureaux which collect facts bearing on commerce and industry and study the causes which influence development. These bureaux possess commercial museums exhibiting the chief types of products, both imported and exported.

*Colonisation.* — This work has been somewhat hindered by circumstances, but the scheme embraces the following types of colonisation:

*a*) The demands of the towns for fruit and vegetables are continually increasing, and this provides a very favourable opportunity for the establishment of market gardens on the best soils as near as possible to the outskirts of the towns. Allocations of land for this purpose have already been made at Kenitra, Fez, Rabat-Sale, and Casablanca, and others are being considered.

*b*) As soon as new lines of railways are projected areas of land not exceeding 50 acres in extent will be let out in the immediate neighbourhood of the lines.

*c*) Provision has been made for the distribution of lots of land from 250 to 325 acres in extent, suitable for conversion into farms. Facilities for payment are given, subject to certain conditions as to working and improvement.

*d*) The Administration will lend its aid to large estates which are prepared to subdivide their property for the creation of farms for immediate cultivation. For this purpose assistance will be given for the building of communication roads and for the provision of a stock of public implements and machinery.

*e*) Special areas of land will be reserved for the native elements and efforts will be made to extend the work of the native provident societies in checking usury, and to develop the spirit of cooperation in the buying of seeds, implements and breeding stock.

SECOND PART.

# ABSTRACTS

## AGRICULTURAL INTELLIGENCE

### GENERAL INFORMATION.

DEVELOPMENT OF AGRICULTURE IN DIFFERENT COUNTRIES

1157 - **The Agricultural Resources of Indo-China.** — BRENIER H. in the *Bulletin de la Société d'Encouragement pour l'Industrie Nationale*, Vol. 126, No. 4, pp. 37-73. Paris, July-August 1916.

*Forest Products.* — Though there are possibilities of opening up a considerable trade with China in the hard woods, at present there is no timber in Indo-China suitable for export to the European markets with the exception of "lim" (*Erythrophleum Fordii* Oliv.) which is the material used for wood block-paving. Exports of forest products consequently consist almost entirely of bye-products, the principal ones being:

Cinnamon.
"Cunao" (tubercles of the Discoriaceae family from which a dye is obtained).
Cardamones (fruits of several Zingiberaceae).
Benzoin.
Guttapercha
Sticklac (1).
Rattans for fine canework.
Palm wood for unbrella handles.
Vegetable lac (obtained by tapping trees of the Anacardiaceae order).
Oil seeds of *Calophyllum Inophyllum* Lin., *Camellia drupifera*, Lour and *Garcinia*.
"Abrasin" (a drying oil probably obtained from *Aleurites montana* Wils.)
Camphor
Resin (from *Pinus Massoniana*).

Mangroves abound on the coast and might be made to produce considerable quantities of bark of an exceptionally high tannin content, some samples having yielded up to 24 to 25 per cent of tannin.

(1) See *B.* August 1916, No. 895.

*Animal Products.* — It would probably be possible to develop an export trade from Cambodge and Southern Annam. Exports of raw hides had already reached 3000 tons in 1913.

*Food Stuffs.* — After Burmah, Indo-China is the most important rice exporting country in the world and judging from the results obtained at the Experimental Station of Buitenzorg (Java), the production could be raised 50 per cent by the use of improved varieties. Maize is now being grown for export and an experimental ground has been set aside in Tonkin to investigate problems in connection with this crop. Small quantities of manioc and arrowroot are put on the market and could well be increased. Various kinds of pulse crops have been tried with success in Tonkin, the most popular at present being gram (*Cicer arietinum*).

Tropical fruits give promise of great future developments. With cold storage facilities, mangoes, mangostans and pineapples could easily be put on the European markets, while a profitable commerce could no doubt be established in preserved papaya fruit (valuable for its peptic ferment papain) and dried " letchis " (*Nephelium Lit-Chi*). Coffee and tea have been successfully planted and may become important in the more or less remote future, but cocoa is at present almost unknown in the colony, though suitable localities for its growth exist in Cambodge around the Gulf of Siam. Pepper is already being exported in considerable quantities, and so is cane sugar, though the latter industry is not in a very flourishing condition, its only experimental station (in central Annam) having been recently shut down.

*Fibres.* — Cambodge cotton is of a good fine quality though not up to Louisiana varieties in length of fibre and tensile strength. It is all exported to Japan. Good progress has been achieved in the silk-worm industry and Tonkin silk now competes with Canton products on the European markets. The Experimental Station at Phulangthoung distributes selected graine from which yields of 1 lb. of silk per 13.5 lbs of cocoons have been obtained or about twice as much as the native varieties produce.

Jute has been given a long but unsuccessful trial in the colony, ramie (*Boehmeria nivea* and *B. tenacissima*) is found sporadically, and *Hibiscus cannabinus* is indigenous to the country but its cultivation does not offer commercial openings at the moment. Kapok is obtained from *Eriodendron anfractuosum* and *Bombax malabaricum* and is exported together with coir.

A certain amount of material is sent to Europe for the rush and cane industries, i. e. various rushes, rattan canes and the leaf fibres of palms, *Livistona sinensis, Chamœrops* etc. Bamboo pulp for papermaking is now being manufactured at Vetri, a place situated at the junction of the Red and Claire Rivers.

*Oils and Fats.* — Copra is produced in Cochin-China, ground-nut in central Annam and castor oil seed in Tonkin. The colony also exports sesame seed and hevea seed which contains about 42 per cent of a drying oil somewhat similar to linseed oil. There are districts in Upper Tonkin where hemp and colza could no doubt be grown with success.

*Various Other Products.* — The most important of these is plantation rubber. In 1913 as much as 29 300 acres were under heveas, representing capital sunk to the value of £ 800 000. Exports in 1914 amounted to 180 tons.

Finally as worthy of possible future developments the following materials should be mentioned: tobacco, to be grown for the French Government monopoly; various essential oils and extracts such as badian, citronella, vetiver, lemon grass, ylang-ylang, galangal, camphor; catechu; coca; and lastly agar-agar to be obtained from certain seaweed beds on the coast of Annam.

1153 – **Agriculture in Switzerland.** — I. DESERENS E., Les améliorations foncières en Suisse, in *La Vie agricole et rurale* Year VIII, No. 36 (Special number on Swiss agriculture), pp. 161-164. Paris, September 2, 1916. — II. BORGEAUD A., Le bétail bovin en Suisse. *Id.*, pp. 164-172. — III. FREY J., Les coopératives d'élevage du bétail en Suisse. *Id.*, pp. 173-175. — IV. BOUKET D., La chèvre en Suisse. *Id.*, pp. 176-180. — V. PORCHET F., La viticulture en Suisse; ses rapports avec l'Etat. *Id.* pp. 184-185. — VI. Le régime des forêts en Suisse. *Id.*, pp. 184-185. — VII. PENEVEYRE F., La culture fruitière à la montagne, spécialement dans les Alpes et le Jura Vaudois. *Id.*, pp. 186-188..

The area of cultivated land in Switzerland is so limited and its value is so high that the State takes an active interest in all schemes of reclamation or improvement. A government service has been instituted for the purpose of assisting any such schemes and the writer is at the head of the section for the canton of Vaud.

All the available arable land is liable to flooding and to damage by erosion and landslips. For this reason as early as 1807-1816 the Federal Government took part in the first scheme for the regulation of watercourses, *i. e.* the embankment of the River Linth. Since then it has assisted in the work of regulating the water system of the Jura and its adjoining plains, and in many other schemes of a similar nature. During the period 1872 to 1911 the federal inspectors of Public Works sanctioned the expenditure of no less than £ 9400 for such purposes. The results have been excellent for the Canton of Saint-Gall, in three cases the value of the land has been raised to the extent of £ 27 per acre, while in the valleys of the Rhine, Linth and Seez an expenditure of £ 52 000 actually produced improvement valued at £ 134 000.

Drainage was first practised about 1850 and two years later Friburg passed a law making the drainage of bogs compulsory. In some cantons diplomas were granted to men who showed special proficiency in such work.

Over the whole of Switzerland, peasant proprietors are the rule and the holdings are very small. Out of a total of 252 496 holdings 201 919 range from 1 to 2 ½ acres, and not only are they too small but each holding consists of several scattered plots, the 201 919 in question being made up of nearly three million plots averaging 0.6 of an acre each. In some cantons the necessity of redistributing the area has been felt for the last thirty years, and the idea has gradually been extended over the country, so that now, if in any part of Switzerland two thirds of the holders, holding no less than one half of the land between them, agree to make

a rational redistribution of the land they have the legal right to enforce the reform.

The improvement of the mountain holdings is encouraged not only by the federal and canton governments, but also by numerous associations formed for that purpose. Such improvements consist in draining, harrowing and manuring the soil ; in collecting and removing stones ; in the building of roads, houses and farm buildings ; in the putting up of fences ; and in the regulation of surface water. Between the years 1885 and 1912, over £ 560 000 was spent on work of this kind.

With regard to the granting of financial assistance for the various schemes for agricultural improvements and reclamation, the Federal Government goes on the principle of helping those who help themselves and only subsidises schemes towards which the canton have contributed one half the estimated cost. The distribution of grants and subsidies since 1885 has been as follows :

| | Total cost | Sum contributed by Federal Government | Sum contributed by Canton Government |
|---|---|---|---|
| | £ | £ | £ |
| *Lowland reclamation* 1885-1912 : | | | |
| Drainage and irrigation (53 000 acres) | 532 000 | 155 000 | 126 000 |
| Construction of roads (140 miles) . . | 91 000 | 26 000 | 18 500 |
| Redistribution of land among small-holders (170 000 acres) . . . . . | 112 000 | 41 000 | 29 000 |
| Other improvements . . . . . | 93 000 | 25 000 | 20 000 |
| | 828 000 | 247 000 | 193 500 |
| | 464 000 | 162 000 | 109 000 |
| *Mountain reclamation*. . . . . | 1 392 000 | 409 000 | 302 500 |

Since 1893 the Federal Government has also undertaken to pay part of the salaries of the agricultural experts engaged by the cantons.

II. — The total head of live stock in Switzerland has been valued at £ 28 000 000 and the importance attached by the government to this branch of agriculture is shown by the fact that the state grants a sum of £ 40 000 per annum for the encouragement of pure breeding.

In all live stock shows, judging is carried out exclusively by the system of score cards, a sample of which is given in the adjoining table, and great stress is laid on pedigree which counts for half the total number of possible points, as follows :

Out of 100 possible points,

| | |
|---|---|
| 16 points | are allowed for the 2 parents or 8 points for each |
| 16 points | " " " 4 grandparents or 4 points for each |
| 16 points | " " " 8 greatgrandparents or 2 points for each |
| 48 points | " " " whole pedigree. |

## *Score card for Simmenthal cattle.*

### Bulls.

Born ..... No.

Permanent dentition .....

| cm. | Per cent | Good measurements for 2 year olds and more | Good measurements for Yearlings | | Max. | | |
|---|---|---|---|---|---|---|---|
| | | cm. | cm. | | | | |
| ..... | ..... | *29–33* | *30–33* | HEAD | 10 | | ..... |
| ..... | ..... | *15–16,5* | *15–16,5* | NECK | 3 | | ..... |
| | | | | TRUNK: | | | |
| ..... | ..... | *43–46* | *41–44,5* | Chest, length ..... 3 | | | |
| ..... | ..... | *43–46* | *43–44,5* | Chest, depth ..... 3 | 11 | ..... | |
| ..... | ..... | *30–33* | *28,5–32* | Chest, width ..... 5 | | | |
| | | | | Withers and shoulder | 9 | ..... | |
| | | | | Line of the back ..... | 6 | ..... | |
| ..... | ..... | *23,5–25,5* | *23–25* | Back, belly and flank | 5 | ..... | |
| ..... | ..... | *32–35* | *32–35* | Rump, hook bones to hip joint ..... 2 | | | |
| ..... | ..... | *31–34* | *30–32,5* | Width of haunch ... 2 | 10 | ..... | |
| ..... | ..... | *30–33,5* | *30–33* | Width of hip joint .. 2 | | | |
| | | | | Shape and angle of croup ..... 4 | | | |
| | | | | Attachment of tail ... | 4 | ..... | |
| | | | | Length of hind quarters ..... | 4 | ..... | ..... |
| | | | | LIMBS: | | | |
| | | | | Foream and leg ..... | 2 | ..... | |
| | | | | Shinbones and hocks | 5 | ..... | |
| | | | | Pasterns and hoofs ... | 3 | ..... | |
| | | | | Carriage ..... | 5 | ..... | ..... |
| | | | | SKIN AND HAIR ..... | 5 | | ..... |
| | | | | COAT COLOUR ..... | 5 | | ..... |
| | | Height of withers | | | | | |
| ..... | ..... | *82–87* | *83–91* | | | | |
| | | Profection of sacrum | | | | | |
| ..... | ..... | *2–6* | *4–9* | GENERAL CONFORMATION, length of limbs, fineness of bone ..... | 6 | | ..... |
| | | Height of knee | | | | | |
| ..... | ..... | *21–23* | *22–25* | GENERAL DEVELOPMENT (weight) ..... | 7 | | ..... |
| | | Point of hock | | | | | |
| ..... | ..... | *28–31* | *30–33,5* | Total ... | 100 | | |
| | | | | Pedigree ..... | 50 % | | |

### Cows and heifers.

Born ..... No.

Permanent dentition .....

| cm. | Per cent | Good measurements for 3 year olds and more | Good measurements for 2 year olds | | Max. | | |
|---|---|---|---|---|---|---|---|
| | | cm. | cm. | | | | |
| ..... | ..... | *29–32* | *30–32,5* | HEAD | 10 | | ..... |
| ..... | ..... | *15–16,5* | *15–16,5* | NECK | 3 | | ..... |
| | | | | TRUNK: | | | |
| ..... | ..... | *42–44,5* | *41–44,5* | Chest, length ..... 2 | | | |
| ..... | ..... | *43–45,5* | *43–45,5* | Chest, depth ..... 3 | 9 | ..... | |
| ..... | ..... | *28–32* | *27–31* | Chest, width ..... 4 | | | |
| | | | | Shoulder and withers | 7 | ..... | |
| | | | | Line of the back ..... | 4 | ..... | |
| ..... | ..... | *24–25,5* | *23–25* | Back, belly and flank | 4 | ..... | |
| ..... | ..... | *31–34* | *31–34* | Rump, hook bones to hip joint ..... 1 | | | |
| ..... | ..... | *32–35* | *32–35* | Width of haunch ... 1 | | | |
| ..... | ..... | *30–33,5* | *30–33,5* | Width of hip joint .. 2 | 7 | ..... | |
| | | | | Shape and angle of croup ..... 3 | | | |
| | | | | Attachment of tail .... | 4 | ..... | ..... |
| | | | | Length of hind quarters ..... | 3 | ..... | |
| | | | | LIMBS: | | | |
| | | | | Forearm and leg ..... | 2 | ..... | ..... |
| | | | | Shins and hocks ..... | 4 | ..... | ..... |
| | | | | Pasterns and hoofs ... | 3 | ..... | ..... |
| | | | | Carriage ..... | 5 | ..... | ..... |
| | | | | SKIN AND HAIR ..... | 5 | | |
| | | | | COAT COLOUR ..... | 5 | | |
| | | Height of withers | | | | | |
| ..... | ..... | *81–87* | *84–89* | | | | |
| | | Projection of sacrum | | | | | |
| ..... | ..... | *4–8* | *5–10* | UDDER AND MILKING POINTS ..... | 12 | | |
| | | Height of knee | | | | | |
| ..... | ..... | *21–24* | *23–35* | GENERAL CONFORMATION, length of limbs, fineness of bone ..... | 6 | | ..... |
| | | Point of hock | | | | | |
| ..... | ..... | *30–33,5* | *32–55* | GENERAL DEVELOPMENT (weight) ..... | 7 | | ..... |
| | | | | Total ... | 100 | | |
| | | | | Pedigree ..... | 50 % | | |

Outside crosses are not encouraged and improvement is obtained by the method of selection and in-breeding.

The characteristics of the four chief Swiss breeds — Simmenthal, Schwitz Friburg and Herens — are given in this article as well as their geographical distribution in the country.

III. — There are 850 cooperative live stock societies in Switzerland (1) amongst which the two chief breeds, Simmenthal and Schwitz, are distributed in about equal numbers.

IV. — Swiss goats have long had a very good reputation abroad and exports of the Toggenburg breed to England were begun as early as 1886. During the nineties goats were much improved by a careful selection of breeding stock without bringing in any foreign blood. The four chief breeds are: the Valaisian or Black Neck, the White Saanen or Gessenay, the Alpine, and the Toggenburg. There are a number of goat clubs, and during the years 1908 to 1910 the Federal Government granted the following bonuses to prize animals:

£ 490 to 1184 animals in 1908.
£ 570 to 1225 animals in 1909.
£ 650 to 1335 animals in 1910.

Swiss goats yield on an average 150 to 180 gallons per annum. In the valleys they are kept by the smallholders and graze the land near the homesteads, but on the higher ground there is usually a village goat-herd who collects the animals every morning and takes them to the upland pastures for the day, bringing them home again each evening. There are 115000 herds in Switzerland averaging 32 goats per herd. An active export trade is done with Germany where the Swiss breeds have given excellent results when crossed with the local German goats. The trade will probably be extended to France for the improvement more especially of those breeds found in the Central Plateau.

V. — The area of land under vineyards only amounts to 60 000 acres in Switzerland, yet there are two experimental stations set aside for purely viticultural work. One is the Federal Station at Wadenswil and the other is run by the canton of Vaud at Lausanne. In other parts of the country special instruction is given in the form of short temporary courses which the Federal Government contributes to by paying one half the cost. Assistance is given by canton and Federal Governements to all cultivators who are willing to take protective measures against diseases such as mildew, or to insure themselves against damage by hail. Important subsidies are granted too for reconstituting the vineyards (*i. e.* replacing vines which are either attacked or liable to attack from phylloxera by varieties grafted on resistant American stock). Cultivators have received as much as £ 35 to £ 45 per acre for this purpose, half of which was

(1) See International Review of Agricultural Economics, Jan. 1916, pp. 47-56.

contributed by the local government and half by the central government. Swiss wines are protected by an import duty on all foreign wines.

VI. — Forests in the canton of Vaud are classified as follows:

*Public and private forests.* — Under the heading of private forests would also be included land owned by an association of small holders.

*Protective and non-protective-forests.* — Protective forests are those situated in the collecting areas of torrents or those which by their position exert a protective influence against storms, avalanches, rock-slides, landslips and erosions or which tend to regulate the flow of water from a mountain side.

*Mountain forests and lowland forests.* — The distinction between these two classes is merely an arbitrary division made locally by the communes at an altitude of 2500 to 3000 ft., and is not recognised in federa-edicts.

In every kind of forest whenever felling is in progress the replanting of a surface equal in area to the surface felled is made compulsory both by the federal and canton law. All trees to be felled must be previously marked and no clear felling is allowed without special permission from the local authorities. In the case of protective forests the Federal Government only can give leave for cutting and all operations must be carried out under the supervision of the local officer.

VII. — Various attempts dating as far back as the sixteenth and eighteenth centuries have been made to extend the area of orchards in the high parts of the canton of Vaud. In 1890 the Agricultural Institute at Lausanne imported a number of hardy varieties of plums, apples, pears and cherries from Russia, Sweden and Denmark, and nurseries were established at high altitudes (2500 to 4000 ft.) for their propagation. The following year a few small trial orchards were planted on Mount Jorat overlooking Lake Lehman at about 3000 ft. and when these were well started general planting was encouraged by means of practical demonstrations, lectures and by the free distribution of the new varieties.

The most successful kinds are given below:

| Apples | | Pears | Plums |
|---|---|---|---|
| Red Astrakan | Borowinka | A variety imported under the name of Vineuse Saxonna proved to be beurré de Montécat. | Rothdamasiner. |
| White Astrakan | Antonovka | | |
| Biali Naliv | Papierovka | | |
| Titovka or Tulska | | | |

There are now flourishing orchards of Titovka, Antonovka and Papierovka at about 4000 ft. high.

1159 – **The Oxygen Consuming Powers of Natural Waters.** — HEISE G. W., and AGUILAR R. H., in *The Philippine Journal of Science*, Vol. XI, Sec. A., No. 1, pp. 37-47. Manilla, January 1916. RURAL HYGIENE

The oxygen consuming capacity of water as measured by its ability to reduce potassium permanganate is a sensitive means of detecting fluctuations in quality in a water supply, and gives comparable results when

a fixed method is strictly adhered to. In order to study some of the factors which influence the reaction a series of tests were carried out with river water drawn from the Manilla city reservoir and containing less than 5 parts per million of chlorides.

The first factor studied was the length of time allowed for the digestion. Samples of 200 cc were used and the tests were carried out at 100°C. The results are given in Table I.

TABLE I. — *Reduction of potassium permangate by water; effect of varying the duration of digestion.*

| Duration of digestion | Permanganate required (1) |
|---|---|
| | cc. |
| Less then 1 minute | 0.82 |
| 15 » | 1.10 |
| 30 » | 1.27 |
| 45 » | 1.29 |
| 1 hour | 1.34 |
| 2 » | 1.75 |
| 4 » | 2.46 |

(1) 1cc = 0.1 mgm oxygen.

The decomposition showed no signs of reaching an end point after several hours digestion. The tests were then repeated at lower temperatures, but even at 10° C. the effect of the time factor was still marked although the difference between the four and eight hour digestion was negligible for practical purposes.

The effect of the presence of chlorides was next investigated. Samples of 100 cc were used this time and the digestions were kept going for 4 hours at 30° C. Some of the results are given in Table II.

TABLE II. — *Reduction of potassium permanganate by water; effect of presence of chlorides.*

| Chlorine content (in parts per million parts water) | Permanganate required | Difference in permanganate required due to presence of chlorides |
|---|---|---|
| | cc. | cc. |
| 0 | 1.31 | — |
| 5 | 1.38 | 0.07 |
| 10 | 1.46 | 0.15 |
| 20 | 1.48 | 0.17 |

The error due to the presence of chlorides persisted even when digestion was carried on at a moderate temperature. This error was reduced, although not eliminated, if digestion was carried out at or below room temperature and if the final titration of excess potassium permanganate was made with sodium thiosulphate in the presence of potassium iodide and starch indicator. It was further reduced by digesting the water samples with potassium permanganate in alkaline instead of acid solution according to the method described by SCHULZE, and WINKLER (1).

A last series of tests was undertaken to determine the effect, if any, of the presence of traces of hypochlorite in the water. It was found that hypochlorites oxidize organic matter in cold or hot solution and should therefore be eliminated before any determination of the oxygen consuming power is made.

From these results it is evident that the determination of oxygen consumption is not at best an accurate measure of the organic content of water and it gives such uncertain results that isolated determinations are of very little value. It is only when a water supply is to be consumed repeatedly that the method becomes very useful.

1160 – **Immunity to Cow Pox as a Result of Intravascular Infections.** — CAMUS L., in *Comptes Rendus des Séances de l'Academie des Sciences*, Vol. 163, No. 14, pp. 338-340. Paris, October 2, 1916.

A series of experiments were carried out with cow pox vaccines in order to determine the length of time, if any, which must elapse between inoculation and immunisation. A very pure vaccine was injected into the veins or arteries of rabbits, and immunity was tested by local reactions. The results show that the time required for immunisation varies inversely with the amount of vaccine injected, so that though it may not be possible to suppress completely the latent or incubation period, it is easy to modify its duration. Individual differences in the subjects are far less important than the amount of vaccine used. Other investigators (BOUSQUET, HUSSON, HEIM and GREGORY) who have not taken into account either the activity of their vaccine, or the size of their doses have obtained very contradictory results with regard to the period of incubation, and the above experiments offer a satisfactory explanation of the discrepancies recorded.

1161 – **The Royal Institute for Agricultural Experiments Tripoli.** — MANGANO G., in *Ministero delle Colonie, Ufficio Economico, Bollettino di Informazioni*, Year V, Nos. 1, 2 and 3, pp. 7-122. Rome, January, February and March 1916.

EXPERIMENTAL AND ANALYTICAL WORK

One of the first duties of the Agricultural Department ("Ufficio Agrario") of Tripoli has been to found an experimental station for the improvement of existing agricultural practice in the colony and to extend the area of cultivated land. The station was established in the autumn of 1914 at Sidi el Mesri, on the outskirts of the city of Tripoli, where build-

(1) See *Dingler's polytech. Journal* (1868) 188, 197; *Zeitschrift für analytische Chemie* (1914) 53, 561 (*Ed*).

ings had been already erected for an agricultural school by the Turks. Temporary accommodation is there provided for a metorological observatory, a museum and library, chemical and botanical laboratories, and for the necessary scientific and administrative staff. Store rooms, stables, implement sheds, cattle sheds and cottages for the servants and workmen are grouped round the main buildings ; also a good covered well fitted with an electric pump and a reservoir of 2000 gallons capacity.

The experimental ground is divided into :

1) A *park* where varieties of trees and shrubs are tested for sylvicultural, ornamental and protective purposes. Thirty eight kinds are at present on trial and this number will be greatly increased as time goes on.

2) A *dry orchard* for fruits which are likely to prosper without irrigation. These consists of :

| | |
|---|---|
| Peaches | Apricots |
| Walnuts | Almonds |
| Figs | Quinces |
| Loquats | Pears |
| *Zizyphus* spp. | Cherries |
| Pomegranates | Table olives |
| Carobs | Eucalyptus |
| Casuarina | |

3) An *irrigated orchard* which is also provided with efficient wind screens. It is planted with all the fruits of the dry orchard except carobs, casuarina, olives, and eucalyptus, and has in addition :

| | |
|---|---|
| Lemons | " Kin Kans " |
| Bergamots | Kumquats |
| Limes | Citrons |
| Oranges | Custard apples |
| Tangerines | Avocados |

4) A *dry almond orchard* to test the possibility of establishing such trees on the dry steppe.

5) A *dry olive grove* consisting partly of an old established plantation and partly of a new plantation of native and Italian varieties.

6) An *irrigated palm grove* in which all the varieties of North African dates are eventually to be collected for purposes of classification. At present 47 kinds of *Phoenix dactylifera* ar egrowing there. These have been all obtained from the coastal region between Agilat and Tadjioura, and later, other parts of North Africa will be explored to provide new material for study.

7) A *dry vineyard* for testing species and varieties of Italian grapes suitable for use as table fruit or as dried fruit. The climate of Tripoli should be well adapted to the production of the earlier varieries of such grapes.

8) A *plantation of prickly pears* on particularly arid soil where

Tunisian, Sicilian and American varieties of the two types of plants will be raised — the spineless type as a fodder plant and the spiny kind for hedging.

9) *A field for cereals* which at present consist of a few obscure varieties of local barley and some native and Italian varieties of wheat.

10) A *field for fodder plants* where hairy and common vetches, vetchling (*Lathyrus sativus*), fenugreek, sulla or Spanish sanfoin, chloris, and taff are being tried without irrigation. A small plot of mangels is also under experiment.

11) A *field for irrigated crops* which is principally occupied by lucerne, the rest being under tobacco. Of the latter the Turkish varieties Giant Herzegovina, Porsucian, Xanthi jaka, Aya Sluk and Samsoun, also Virginia bright and Java have been under trial and these not only at Sidis el Mesri, but also on various other estates.

As the coastal region has proved well adapted to the growth of mulberry trees, the question of introducing the rearing of silkworms on the oasis farms is full of interesting possibilities. As a start a few experiments have been carried out with graine of the Pyrenees, Grand Sasso, Polyjaune, Istria Yellow and native Yellow *C* and *F* breeds, and the crosses Chinois or × Bijaune and Bijaune or × Batoum Yellow. The results have been most encouraging.

So far as irrigation problems are concerned, the Institute is at present investigating wells and water lifting apparatus for use on the different kinds of farms. In the immediate district of Sidi el Mesri two wells have already been dug and three others have been deepened and put into working order. But progress in the establishment of water raising plant is slower as the systems in use are numerous and varied and the individual merits of each have to be determined. Those at present under construction are:

The Arab system of counterpoise or shadoof.
The noria or endless chain with buckets, worked by horse gear.
The windmill with force pump.
The Archimidean screw worked by motor.
The compressed air pump.
Electric pumps of high and moderate power.

The Institute also proposes to take up the difficult problem of reclaining the sand dunes, both with a view to extending the area of productive land and of protecting the more inland tracts from blown sand. An experimental ground has already been set aside for testing the various plants and trees which are known to have a binding effect on the surface and which at the same time may be made to produce useful crops.

The department dealing with live stock has not yet been created, but will eventually undertake research on: the native breeds of all classes of farm animals (including horses, cattle, dromadaries, camels, donkeys, sheep, goats, pigs, ostriches, and poultry) and the possibility of improving them by selection and by crossing with suitable imported breeds;

the harvesting, storage and feeding value of forage crops ; the commoner diseases of live stock and means of checking and preventing them ; systems of management and breeding and the returns to be obtained from each. The Institute itself will endeavour to keep a large head of all kinds of breeding stock to be drawn upon by other parts of the colony as required ; also demonstration flocks and herds to be run on economic lines. Extensive trials will be carried out at one of the special farms mentioned below on the management of animals turned to pasture.

A nursery has been established within two miles of Sidi el Mesri to provide stock for the Institute and for distribution to sub-stations and to native and Italian farmers. Olive trees (of the Tripoli, Tunisian and wild varieties), Seville oranges, bitter almonds and various forest trees are already being cultivated as well as certain fruit trees and bushes. Plots are also prepared for raising special strains of lucerne and tobacco.

The complete project of the Tripoli Institute includes the creation of two demonstration farms. One of these, in the region of Tarhouna, will specialise in the production of cereals and the grazing of live stock. The other, which has already made a start, is situated at Sabrata (district of Agilat) in the middle of a large area of good steppe soil, with a reasonably high water table. This area is crossed by the railway and enjoys a good climate so that the conditions are eminently adapted to the foundation of a big Italian farming colony. The type of farming proposed is one consisting chiefly of irrigated plantations, though the proximity of the water to the surface makes it possible not to exclude irrigated crops. Further, the settlement will afford a good opportunity of testing a system of land tenure which is very suitable to North Africa and might lead to the planting up of much land which is at present only producing the poorest pasture and an occasional barley crop. By this system, which is known as the " mougharsa ", the landlord leases the land to a tenant for a number of years (usually ten), and during that time the tenant pays no rent, but is obliged to do a certain definite amount of planting, to build a house and to dig a well. At the end of the given period, the whole property is divided up equally between the landlord and the tenant. At Sabrata, the obligations of the tenant will consist in the formation of an olive grove, the planting of almonds and other fruit trees — all unirrigated — and the making of a small irrigated garden and orchard where the tenant can grow a large part of his own food.

The establishment of a government experimental farm for irrigated crops has had to be postponed owing to the present scarcity of labour, but there are a number of Italians and natives already running their own irrigated farms and these will serve to guide intending settlers who want to learn something about possible returns from irrigated crops.

1162 – **Recent Investigations at the Imperial Institute, London: Whales' Bones from the Falkland Island; Naked Barley from Cyprus; Edible Beans from Burmah; Paper-Making Materials from South Africa; African Silk.** — *Bulletin of the Imperial Institute*, Vol. XIV, No. 2, pp. 149-181 and 261-267. London, April-June 1916.

*Whales' bones from the Falkland Islands.* — The whaling industry of the Falkland Islands and its Dependencies (South Shetlands, Graham's Land, South Orkneys and South Georgia) is now the most important in the world. In the 1913-1914 season 9429 whales were caught, the total value of the products being £1 301 548. The bones, which accumulate in enormous quantities, were formerly thrown away, but are now boiled down with the flesh to extract the oil, and the residue is converted into manure. In the 1913-1914 season, 1327 bags of bone meal valued at £570 were produced in South Georgia, while the entire Colony and its Dependencies in the same year produced 94 835 bags of whale guano valued at £47 887. An average sample of the bones reduced to a meal was analysed at the Imperial Institute with the following results which are shown in comparison with those recorded for commercial raw bone meal:

| | Whales' bone meal — Per cent. | Raw bone meal — Per cent. |
|---|---|---|
| Moisture | 7.30 | 8.80 |
| Organic matter | 40.40 | 34.94 |
| containing nitrogen | 3.87 | 4.19 |
| " oil | 11.50 | about 10 |
| Phosphoric acid | 20.24 | 21.66 |
| Lime | 24.06 | 28.53 |
| Magnesia etc. | 7.39 | 4.62 |
| Siliceous matter | 0.61 | 1.45 |

*Naked Barley from Cyprus.* — In a sample of skinless barley received from Cyprus, the grains varied in size, were of a light brown colour and had a dull translucent appearance. Their germinating power was 96 per cent within 5 days. The barley was analysed and compared with English and Azof varieties with the results given in Table I.

This naked barley could not be employed for malting purposes but possibly might be used by distillers. Also it ranked as a good class of feeding barley and might be employed for blending with other feeding stuffs. In March 1916 it was valued at from £2 10*s* to £2 12*s* 6*d* per 480 lbs. c. i. f. London.

*Edible beans from Burmah* (1). — Experiments have been carried out at Mandalay, Burmah on the cultivation of Lima beans (*Phaseolus lunatus*) which were introduced from Madagascar and California in 1912-1913 and of tepary beans (*P. acutifolius*) which were introduced from the United States in 1914-1915. The first crop of Madagascar Lima beans contained more prussic acid than the original seeds (0.0025 to 0.008 as against 0.002

(1) See *R.* 1916, No. 5. (*Ed.*)

TABLE I. — *Composition of naked barley from Cyprus.*

| | Naked barley | English barley | Azof barley |
|---|---|---|---|
| | Per cent | Per cent | Per cent |
| Moisture | 10.4 | 14.9 | 12.9 |
| Total nitrogenous substances | 11.5 | 8.0 | 12.3 |
| True proteins | 10.3 | — | — |
| Other nit. subs. | 1.2 | — | — |
| Fat | 1.9 | 1.5 | 2.5 |
| Carbohydrates | 72.4 | 68.5 | 65.1 |
| Fibre | 1.8 | 4.5 | 4.4 |
| Ash | 2.0 | 2.6 | 2.8 |
| Albuminoid ratio | 1 : 6.7 | 1 : 9.0 | 1 : 5.7 |
| Food units | 106 | 92 | 102 |

TABLE II. — *Composition of tepary beans, of Voandzeia subterranea beans and of the residual meal from water-melon seeds.*

| | Tepary beans | *V. subterranea* beans | Residual meal from water-melon seeds |
|---|---|---|---|
| | Per cent | Per cent | Per cent |
| Moisture | 12.0 | 8.25 | 9.5 |
| Total nitrogenous substances | 23.6 | 21.3 | 18.3 |
| True proteins | 20.6 | 19.8 | 17.5 |
| Other nit. sub. | 3.0 | 1.5 | 1.0 |
| Fat | 1.8 | 5.9 | 0.5 |
| Carbohydrates | 57.2 | 58.1 | 26.9 |
| Fibre | 2.7 | 3.2 | 41.9 |
| Ash | 3.2 | 3.3 | 2.9 |
| Albuminoid ratio | 1 : 2.9 | 1 : 3.4 | 1 : 1.5 |
| Food units | 119 | 127 | 74 |

to 0.0025) ; in subsequent crops this high content was considerably reduced though it still remained above that of the imported beans. It would appear from the results obtained that the prussic acid content is affected by the weather conditions, but not, on the other hand, by the nature of the soil on which the crop is grown. The Californian Lima beans yielded seed smaller than the original sample and containing 0.0045 per cent of prussic

TABLE III. — *Chemical examination of tambookie grass from the Transvaal and papyrus from Zululand.*

| | Tambookie grass | Papyrus | |
|---|---|---|---|
| | | Stems and leaves | Stems only |
| | Per cent | Per cent | Per cent |
| Moisture (on drying at 100°–110°C) | 10.2 | 12.1 | 11.6 |
| Ash (expressed on dry material) | 7.4 | 6.0 | 9.4 |
| Yield of unbleached pulp (dried at 100°–110°C.) | | | |
| Expressed on air-dry material | 37.1 | 21.2 | 22.5 |
| » » material dried at 100°–110C. | 41.3 | 24.0 | 25.5 |
| Loss in weight of pulp on bleaching | 3.1 | 13.9 | 4.9 |
| Yield of bleached pulp (dried at 100°–110°C.) expressed on original material dried at 100°–110°C | 40.0 | 20.7 | 24.3 |
| | ins. | ins. | ins. |
| Length of ultimate fibres | 0.012 to 0.188 | 0.009 to 0.18 | 0.01 to 0.18 |
| Mean Length | 0.081 | 0.042 | 0.048 |

acid. They were valued at £12 to £14 per ton on a normal London market.

Tepary beans are said to be specially adapted to dry situations where other beans do not succeed, as they will bloom and set seed during periods of extreme heat, yielding a crop about four times as large as would be obtained from the kidney bean (*P. vulgaris*). The sample received from Burmah was in good condition ; it contained no alkaloids or cyanogenetic glucosides and compared favourably with haricot beans with regard to food value (Table II). On a normal London market it should be worth £10 a ton.

*Voandzeia subterranea beans from the Sudan.* — *V. subterranea* is a leguminous plant widely cultivated in tropical Africa for its seeds which form an article of native diet. Specimens of the beans from the Northern Provinces, Nigeria and from Zanzibar were examined at the Imperial Institute some years ago (1) ; the present samples were of rather better quality. Their composition is given in Table II. They contain no cyanogenetic glucosides or alkaloids and could be used for making compound foods at a price of about £4 per ton.

*Water-melon seeds from the Sudan.* — Water melons (*Citrullus vulgaris*) are cultivated on a considerable scale in Kordofan Province and a sample of the seeds was sent for examination to the Imperial Institute with a view to finding a market for them in London. The seeds contained

(1) See *B.* 1913 Nos. 1 and 5. (*Ed.*)

7.4 per cent of moisture and yielded 23.6 per cent of brownish yellow oil which had the following constants:

| | |
|---|---|
| Specific gravity at 15°C | 0,923 |
| Solidifying point of fatty acids | 30.5°C |
| Acid value (mgms. potash per 1 gm. oil) | 8.4 |
| Saponification value | 191.4 |
| Iodine value | 117.1 per cent |
| Hehner value | 95.1 |

The oil is very similar to that obtained from other cucurbitaceous seeds. The residual meal left after extraction contains no alkaloids or cyanogenetic glucosides; it has a high percentage of fibre and a low food value (Table II).

*Colocynth pulp from the Sudan.* — Colocynth is the name given to the peeled dried fruits of *Citrullus Colocynthis*, the material freed from seeds constituting the drug known in the British Pharmacopoeia as colocynth pulp. Before the war, it was largely obtained from Turkey and Austria and recently considerable quantities have been exported from the Sudan. The sample under examination was of good quality and was valued at 1*s* 3 *d* per lb.

*Papermaking materials from South Africa.* — Tambookie or tambootie grass (*Cymbopogon Nardus* var. *vallidus*) is said to grow luxuriantly over large tracts of country in the Transvaal reaching a maximum height of 5ft. 6 in. The results of the chemical examination of the grass is shown in Table III. A high yield of pulp of good quality and easily bleached was obtained, and from it a strong paper was prepared. The grass was valued at £4 per ton.

A sample of papyrus from Zululand consisted of greenish yellow pithy stems averaging 7ft in length and 1 in. in diameter at the base, each with a tuft of narrow pointed leaves (about 14 ins. long) at the top. The proportion of stems to leaves in the sample was as 4 to 1. Results of the chemical examination are given in Table III. The yields of pulp are comparatively low, but the material might be used with profit if worked up near its place of production.

*African wild silk.* — The only African insects which produce silk in important quantities are those belonging to the different species of *Anaphe* (fam. *Eupterodidae*). The most important of these found on British territory are:

*A. infracta* in Nigeria and Uganda
*A. venata* in Nigeria and the Gold Coast
*A. moloneyi* in Nigeria
*A. ambrizia* in Uganda
*A. panda* in Natal
*A. reticulata* in Natal.

All these insects form silken nests or colonies within which each worm spins its own cocoon. The nests vary considerably in size and form;

they may be more or less spherical as in *A. infracta* and *A. venata* or flattened as in *A. moloneyi*. The envelope of the spherical forms usually consists of three thicknesses of silk: the outer layer more or less papery in texture; the middle layer, composed of loosely spun silk arranged in a number of superimposed sheets; the innermost layer, hard and parchment-like. The envelope of the flattened colonies is made up of a single layer of closely interlaced silk. The silk of both nests and cocoons is naturally brown in colour, but in the absence of light the worms produce a white silk, and for this reason the natives in parts of Nigeria sometimes enclose them in calabashes.

Anaphe silk cannot be reeled as is done in the case of silk from *Bombyx mori*, and it is therefore carded and spun as "waste" silk; but apart from this it more closely resembles *B. mori* silk than does any other kind. It takes dyes well and has been found useful for the manufacture of velvet, sewing silks and other materials. The degummed silk has been valued at about 1*s* per, lb but owing to the large amount of labour required to free the silk from extraneous matter, the crude material if shipped to the United Kingdom would only realize about 1*d* or 2*d* per lb. If however, the silk were cleaned locally by the natives, the clean product might be worth 6*d* per lb. in London.

It has been shown experimentally in Uganda that the worms can be successfully domesticated and there seems to be no reason why a new industry should not be established in Africa.

## CROPS AND CULTIVATION.

SOIL PHYSICS, CHEMISTRY AND MICROBIOLOGY

1163 – **Cause and Nature of Soil Acidity with special Regard to Colloids and Adsorption.** — TRUOG E., in *Journal für Physikalische Chemie*, Vol. XX, pp. 457-484 1916; abstract in *Journal of the Society of Chemical Industry*, Vol. XXXV No. 15, pp. 855 856. London, August 15, 1916.

The production of acidity or alkalinity when certain neutral solutions come into contact with certain solids is probably due to chemical action and not to selective adsorption of ions. Cameron's contention that the acid reaction towards litmus of washed absorbent cotton (and inferenttially of certain soils) is due to the adsorption of cations, is untenable, since such cotton has been found to contain an insoluble fatty acid (perhaps margaric acid), which would not be completely removed by the washings with alkali and acid. When cotton is brought into a neutral salt solution, the salt reacts with the fatty acid, some cations are removed and an equivalent amount of soluble acid liberated. Similarly, the reputed selective adsorption of ions by charcoal is accounted for by chemical actions between impurities contained in it and the dissolved salt.

Assuming selective adsorption, the vastly greater adsorptive power of soils would still need explanation. Arguments are also adduced to prove that soil acidity is not the result of selective ion-adsorption, by colloids or by finely divided solids; and it is shown experimentally that

under suitable conditions, the reactions causing soil acidity proceed according to chemical laws. The acidity in well aerated soils, in particular in cultivated upland soils, is due to the hydrolysis of silicates, of which the bases are removed by plants and by soil water, and to the silica and acid silicates left behind. The weathering process in soils can be reproduced by treating powdered basalt, granite felspar, etc., with carbonated water and filtering: the residues are acid to litmus. In dry regions the soluble salts accumulate and cause alkalinity. In these soils organic acids derived from plant residues are of little importance: they may be formed, but are quickly transformed. In badly aerated soils *e. g.* in peat soils, the plant remains are decomposed much more slowly; instead of being oxidised to carbon dioxide, much of the carbon remains in the soil in organic combination as the so-called humus acids, and eventually is transformed into coal.

The latent acidity of a soil may be largely due to kaolinite and similar compounds, or to free quartz; and the results of the determinations of active and latent acidity show that the amounts of different hydroxides that react with the insoluble acids, are approximately chemically equivalent. The fact that acid soils do not take up equivalent amounts of different bases from salt solutions possessing a common ion, is not opposed to the hypothesis that soil acidity is due to the presence of free acids, for the reactions involved would be much influenced by secondary reactions. By using small quantities of finely powdered soil and large volumes of salt solutions, and minimising the time of contact, the effect of such side reactions can be practically annulled; and determinations of soil acidity under these conditions give results which are best explained on the assumption of the existence of free acids. Further, the adsorption hypothesis would lead to the conclusion that the acidity of a soil would increase if the particles were ground to an impalpable powder: experiments showed a slight decrease.

OPENING UP LAND FOR CULTIVATION

1164 – **The Reclamation of Arid Steppe Soil and of Shifting Sands in the Province of Astrakan, Russia.** — VYSOTZKIF G., The flora of Ergenia and the conditions under which it is developed. *Труды Бюро по прикладной Ботаникѣ* (*Bulletin of Applied Botany*). Year VIII, Nos. 10-11, pp. 1113-1418. Petrograd, October-November 1915. — II. FIRSTOV J. G., The shifting sands of the province of Astrakan. *Сельское Хозяйство и Лѣсоводство* (Agriculture and Sylviculture), Vol. CCV. pp. 616-630. Petrograd, April 1916.

*Geographical conditions.* — In Russia there are three distinct regions of arid steppes:

1) The Pontic region around the northern margin of the Black Sea.

2) The Transdon region and that of the northern Caucasus which together form a triangle with apices at Novotcherkassk, Tzarytzin and Mozdok.

3) The Transvolga region also in the form of a triangle with apices at Kamichin, Saratov and Uralsk.

The last two regions are situated on the edge of a vast semi-desert area which surrounds the Caspian Sea and occupies the greater part of

the province of Astrakan or nearly 11 million acres. This province is divided into two almost equal parts by the lower Volga; the western half occupied almost entirely by the Kalmuks steppe, and the eastern side which forms the Kirghiz steppe. On the western boundary is the Plateau of Ergenia which constitutes the watershed between the basins of the Don and the Volga and separates the Transdon steppe from the Kalmuks. The north of the Kalmuks steppe and the whole of the Transdon steppe (which covers an area of some 5 ½ million acres) are almost completely free from shifting sand. Travelling south through the Kalmuks steppe, patches of loose sand become more frequent and larger till finally they form a continuous surface which also extends up the right bank of the Volga.

To the east of the Volga between the northern boundary of Astrakan and Khanskaia Stavka the soil is only occasionally loose and shifting, but south and east of that district begins a vast sandy tract which gradually merges into a true desert, where there is not a sign of vegetation and where the surface has been blown up into dunes which are continually being remodelled by the wind. This sandy tract of eastern Astrakan extends over about nine and half million acres and makes up 88 per cent of the total desert steppe in the eastern provinces of Russia.

*Geological conditions.* — The whole of Astrakan including Ergenia has a common geological origin, *i. e.* black, compact, impermeable clays of the lower tertiary which hold up the underground water. In the Ergenia area these are covered by oligocene sandstones readily disintegrated and overlaid by clays and loams whose derivation is still obscure and which gradually pass into loess at the surface.

In the main Astrakan plain, which was once the bed of the Aral-Caspian Sea, the changes in sea level have destroyed the sandstones and these have been replaced by a series of deposits which are sandy at the base and clay above. The most important of these sediments is a dark shaly clay which often comes to the surface in ravines and gives rise to agricultural soil. It varies in thickness from 2 ½ to 23 feet, is plastic and heavily charged with mineral salts (gypsum, sulphate of soda and carbonates). Above the clay are two more recent deposits, *i. e.* a thin layer of grey sand covered by an aeolian deposit of yellow sand.

The actual surface of the steppe at present is one vast expanse of loose sands, the products of the disintegration of the very friable uppermost layers. As these layers for the most part only vary in thickness from 2 to 10 inches, they could not possibly supply alone the enormous quantities of sand on the Astrakan plain. The remainder is derived from adjoining depressions in which cyclones sweep with such force that the Caspian clays have been laid bare in places.

The Astrakan sands consist of well rounded grains, yellow in colour owing to the presence of oxides of iron, and very fine (0.1 to 0.2 mm in diameter). The smoothness of the grains gives the sand a very unstable character with no power to resist the force of the wind which piles them up into shifting dunes.

*Meteorological conditions.* — The climatic of Astrakan is continental. Winters are extremely severe and last three months, a minimum temperature of — 30° C being occasionaly reached. Then a very short spring is followed by great summer heat when the thermometer often rises to 40° C. Prevailing winds are from the east and come like a hot blast across the country. The rainfall is very low. At Astrakan it only amounts to 5.72 ins. while the evaporation is 29.3 ins. or five times as great ; there are 121 rainy days per annum with dry intervals which usually last 7 to 10 days except in July and August when there may be 50 or more consecutive dry days, and on the edge of the Kirghiz steppe drought lasting 130 days has been recorded. In Ergenia the rainfall is higher, 4,5 to 9.5 ins. per annum. Mean temperatures in the desert region (Astrakan) and in Ergenia (Tzaritzin) are as follows :

| | Astrakan C | Tzaritzin C |
|---|---|---|
| Mean temperature for January | 7,2 | 11.3 |
| " " " July | 25.5 | 29.6 |
| Mean annual temperature | 9.4 | 7.0 |

*Underground water.* — As a result of numerous investigations it has been proved that there are two layers of underground water in Astrakan : a lower one 25 to 30 feet below the surface, heavily charged with salts, and an upper of fresh water close to the surface and found in the regions where the ground is covered with *Artemisia.* A well 13 feet deep and 5 feet wide in such regions will supply enough water for 100 head of cattle throughout the whole summer.

I. *Ecological study of Ergenia.* — A certain amount of planting was carried out in Ergenia about the middle of the last century. In 1913 the Russian Department of Forests wishing to know whether it would be advisable to resume planting operations, instituted an enquiry into the progress of the planted areas. The writer who was put in charge of the enquiry did not limit his observations to the condition of the forests, but at the same time made a thorough study of the entire regional flora in its relationship to soil, to climate and to cultivation. In the present paper he gives a detailed ecological description of the region, using for the purpose not only his own data, but also that collected by other investigators. Afterwards he discusses the agricultural possibilities of the area.

In studying the plant associations the system was followed of giving to each association a descriptive name which indicates the type of flora represented. For instance :

*Poetum* means a multifloral herbaceous flora in which *Poa pratensis* is dominant.

*Stipetum* (from stipare = to crowd) denotes a typical flora of the virgin steppe forming a close turf and made up chiefly of species like *Stipa* and *Koeleria* and in the east *Avena desertorum* Less.

*Thymetum* is the flora of the calcareous hills where the aromatic species predominate, more especially *Thymus, Satureja, Hyssopus, Zizyphora, Salvia, Scutellaria, Stachys, Teucrium.*

*Artemisietum* is the flora of the acid steppes with weak alkali soils, the dominant species being *Artemisia maritima* and its numerous varieties, *Artemisia pauciflora* Keller, etc.

*Salsoletum* is the flora of strong alkali soils dominated by *Salsola*, *Salicornia*, *Suaeda*, *Petrosimonia*, *Brachylepsis*, *Kalidium*, *Camphorosma*, *Tamarix*, etc.

Using this type of nomenclature, the chief plant associations in Russia are:

| Forest trees | Herbaceous plants and mosses |
|---|---|
| Saliceta | Sphagneta |
| (Alneta, populeta) | Carecta |
| (Betuleta, especially in the east) | Poareta |
| Abiegna | Stipeta |
| Pineta | (Thymeta?) |
| Querceta | Artemisieta |
| (Fageta) | Salsoleta |

On the virgin steppe of the Ergenian Plateau, the dominant plant association is divided into three groups according to the soil: 1) *stipetum latifolium* on the black soil; 2) *stipetum cinereum* on the light brown soils; and 3) *stipetum gramineum* on the dark loams. The last is the most abundant and its flora is given below.

## BOTANICAL COMPOSITION OF THE STIPETUM GRAMINEUM.

### A. — *DOMINANT SPECIES.*

#### I. Woody plants.

*Calophaca wolgarica.* (*Spiraea hypericifolia*).

#### II. Plants with long rhizomes.

***Agropyrum ramosum.***
*Ephedra vulgaris.*
(*Acroptilon Picris?*)
***Carex stenophylla*** C.
*Inula Oculus Christi* C.
*Ranunculus oxyspermus.*
*Achillea setacea.*
*Glycyrrhiza glabra?*
*Poa setacea.*
*Potentilla bifurca* C.

#### III. Plants with short rhizomes.

***Agropyrum cristatum*** C.
(*Allium lineare*).
***Linosyris villosa*** C.
***Pyrethrum achilleifolium*** C.
*Allium flavescens.*
(*Bromus erectus*).
(*Helichrysum arenarium* V).
*Iris pumila* C.
*Galium verum* V, C.
*Inula hirta.*
(*Ranunculus polyrhizus?*)
*Valeriana tuberosa.* C.
*Veronica prostrata.*

#### IV. Plants with short rhizomes and short internodes.

***Stipa sareptana.***
***Koeleria gracilis*** C.
***Festuca sulcata*** C.
***Stipa capillata*** C.
***Stipa Lessingiana*** C.
(*Phleum Boehmeri*).
***Stipa stenophylla*** C.

V. PLANTS WITH TAP-ROOTS.

*Achillea leptophylla.*
***Artemisia incana.***
*Artemisia pauciflora.*
*Asperula humifusa.*
*Astragalus albicaulis.*
(*Astragalus physodes*).
(*Astragalus testiculatus* et *A. dolichophyllus*).
*Cachrys odontalgica* (C).
*Dianthus rigidus.*
*D. pallidiflorus.*
*Eriosynaphe longifolia.*
*Ferula caspica* C.
***Kochia prostrata*** C.
*Statice incana* C.
*Statice sareptana* et *St. tomentella* VI, C.
*Veronica orientalis.*
*Arenaria graminifolia.*
*A. longifolia* C.
*Astragalus subulatus.*
*Astragalus utriger.*
*Dianthus leptopetalus* C.
*Eryngium campestre* C.
*Euphorbia Gerardiana*, VI, C.
*Helichrysum arenarium.*
*Herniaria incana.*
*Linum austriacum.*
*Marrubium praecox.*
*Potentilla astracanica.*
*Statice tatarica* C.
*Thesium ramosum.*
*Veronica spicata* III.
*Asperula glauca* (III ?)
*Astragalus asper.*
*Centaurea ruthenica*
*Crambe aspera.*
*Dianthus capitatus* C.
*Gypsophila paniculata* C.
*Medicago falcata* C.
*Medicago versicolor.*
*Phlomis pungens* C.
*Salvia memorosa.* (= *S. silvestris*).
*Silene wolgensis.*
*Sisymbrium junceum* C.
(*Taraxacum serotinum*).
*Thymus Marschallianus* C.
*Verbascum phoeniceum* C.
*Veronica austriaca.*

VI. PLANTS WHICH PROPAGATE THEMSELVES BY SECONDARY ROOTS.

(*Convolvulus lineatus*).
*Jurinea linearifolia* C.
*Artemisia austriaca* C.
*Euphorbia leptocaula* C.
(*Lepidium Draba*).

VII. BULBOUS AND TUBEROUS PLANTS.

*Allium moschatum.*
(*Colchicum luteum*).
***Tulipa Schrenkii*** C.
*Allium flavum* C.
(*Gagea bulbifera*).
*Ornithogalum brachystachys* C.
*Tulipa Biebersteiniana* II.
(*Allium paniculatum*) C.
*Ornithogalum tenuifolium.*
(*Gagea pusilla ?*).

B. — *SECONDARY SPECIES.*

VIII. BIENNUALS.

*Trinia Hoffmanni* and its *hispida* variety.
*Erysimum versicolor.*
*Erysimum canescens*
*Onosma tinctorum*
*Salvia Aethiopis* C.
*Serratula* (*xeranthemoides*) C.
*Carduus uncinatus* C.
(*Carduus hamulosus*).
(*Falcaria Rivini*) C.
*Silene viscosa.*
*Verbascum orientale.*

IX. WINTER-SPRING, ANNUALS.

*a*) Early:

*Ceratocephalus orthoceras* et *C. falcatus.*
*Androsace maxima.*
*Agropyrum prostratum* et *A. orientale.*
*Veronica arvensis* et *V. verna.*
*Androsace elongata* C.
*Holosteum umbellatum.*
***Alyssum minimum*** C.
(*Draba verna ?*) C.
(*Thlaspi perfoliatum ?*)
*Lamium amplexicaule.*

*b*) Late:

(*Chorispora tenella*).
(*Colpodium humile* IV)
*Bromus tectorum.*
*Bromus squarrosus* C.
***Poa bulbosa vivipara*** IV.
*Arenaria serpyllifolia* C.

X. WINTER ANNUALS.

| | | |
|---|---|---|
| (*Meniocus linifolius*). | *Echinospermum patulum*. | *Camelina microcarpa*. |
| ***Lepidium perfoliatum*** C. | (*Filago arvensis*) C. | *Crepis tectorum*. |
| (*Gypsophila muralis*) C. | (*Trifolium arvense*) C. | *Echinospermum Lappula*. |
| *Echinospermum strictum*. | *Delphinium Consolida* C. | *Lithospermum arvense*. |
| | | *Sisymbrium Sinapistrum* C. |
| | | (*Sisymbrium Loeselii* et *S. Sophia*) C. |

XI. SPRING ANNUALS.

| | | |
|---|---|---|
| ***Ceratocarpus arenarius***. | *Eragrostis minor* C. | (*Chenopodium album ?*) |
| ***Echinopsilon sedoides*** C. | ***Polygonum Bellardi*** C. | (*Polycnemum arvense*) C |
| (*Salsola tamariscina*). | *Atriplex patula*. | |
| (*Passerina annua*). | (*Xeranthemum annuum*). | |

XII. PARASITIC PHANEROGAMS.

*Cuscuta planiflora*. *Orobanche coerulea*.

C. — *CRYPTOGAMS*.

XIII. MOSSES.

*Tortula ruralis*. *Grimmia*.

XIV. ALGAE AND LICHENS.

| | |
|---|---|
| ***Parmella vagans***. | *Nostoc commune*. |
| ***Cetraria aculeata***. | |
| (*Urceolaria scruposa*). | |

XV. FUNGI.

Probably the majority belong to the ***Angiocarpineae*** (*Lycoperdon* spp., *Geaster* spp.) and ***Plectobasidineae*** (*Pisolithus herculeum* Fries).

In the above table the species are divided into three phytosocial groups according to their habitat. In the left hand column are placed those species which are more xerophytic than typical plants of the association and which are bordering on the next plant association *i. e. stipetum cinereum*. In an analogous way the species placed in the right hand column are all bordering on the more hydrophytic association *i. e. stipetum latifolium*.

The names of the commonest species are printed in heavy type. Brackets mean that the identification of the species is not very certain. Roman numerals are used to show that the plant they follow occupies an intermediate position between the class in which it is placed and the class indicated by the Roman figures. The letter C is used after the name of a species when ever that species is a characteristic plant of the virgin steppe of Ascagna Nova (Pontic region) which has been studied by J. K. PATZOSKIF.

The dominant species all consist of perennial plants which occupy the soil in a more or less stable condition, absorb more water and nutrient salts than any other species and are the principal producers of organic matter. The secondary species on the other hand are all plants which flower only once (annuals and bienniels). In the Ergenia *stipetum graminenum* the dominant species are made up of 93 species or 61 per cent of the total number, while secondary species, including parasite plants, are represented by 59 species only.

*The deterioration of Steppes and the means taken to check it.* — Sheep farming is general in the Ergenia region, and the system of grazing is such that it frequently has a deteriorating effect on the flora which tends to become more xerophytic in character and by its gradual modification influences the grazing value and the general productiveness of the virgin steppes. In order to prevent this deterioration and consequent decline of the live stock industry it is absolutely necessary that all grazing areas be given regular periods of rest during which the natural flora will have a chance of recovering from the effects of the grazing. Further, selected plots of the virgin steppes should be fenced round and protected from live stock in order to provide natural seed producing centres for the reconstitution of the surrounding flora. These plots should occur at frequent intervals and include various types of plant associations, *i. e. stipetum gramineum, stipetum subsabulosum, stipetum cinereum, stipetum sabulosum.* It is also recommended that dry farming methods be tried with the idea of introducing a more intensive form of farming.

The creation of artificial forests on the arid steppes is one of the most interesting experiments in applied botany and has important bearings on ecological problems. On the Ergenian plateau woody plants will only prosper in places where the water table is accessible, such as for instance in deep hollows, in ravines, or at the foot of gentle slopes. And such places being very limited in extent, there is no possibility of establishing forestry as a separate industry. All attenpts to do so by the Department of Forests have failed. The cultivation of trees will have to form part of the ordinary farming practice, and small plantations will be the rule. Both fruit and timber may be produced. The most suitable trees have proved to be: *Robina Pseudacacia, Quercus* spp. *Populus* spp., *Pyrus communis, Morus* spp.

II. — *The shifting sands of Astrakan* (1). — Ten million acres of the province of Astrakan are covered with shifting sands which have been formed during the nineteenth century and which are estimated to spread at the rate of 100 000 acres per annum. The principal cause of the rapid transformation of good pasture into barren sand is the bad management of the pastoral population who keep their flocks and herds so long in one place as to result in the complete destruction of the turf. Neither is the condition of affairs very much better where arable farming is practised, for the use of tillage implements helps to loosen the surface, while the cultivators manage to suck the land dry in a few years by a bad system of husbandry, taking one crop after another without manure; then as the crops began to fail, the sand invades the ruined fields and gradually covers considerable areas.

The damage done is enormous, not only in Astrakan, but also in the adjoining provinces and in the whole of southeastern Russia. In 1880 the Government became aware of the inroads of the scourge, but it was

(1) A list of Government publications on the subject is given.

taken to check its progress. During the period 1904-1909, 46000 acres not till the early years of of the present century that active measures were were brought under cultivation and in 1913 a special Government Service was organized to deal with the question. The province of Astrakan was put in charge of a chief forestry officer and divided into six districts in each of which a sub-officer was appointed to superintend the work of reclamation. The seven officers were university men and had a staff of 23 working foresters under their orders. All work was carried out and financed on one of the three following systems:

1) The State to supply all technical advice and the material for seeding or planting, but all the labour to be provided by the landlord. Areas dealt with annually: about 1300 acres.

2) The State to supply technical advice, and to pay half the expenses of the working foresters required to superintend the work, and to make an allowance of 5*d* per day towards the housing and keep of each labourer. The population to provide the men and to pay the other half of the foresters' expenses. Area dealt with annually: 1300 to 2600 acres.

3) The land to be temporarily made over by the landlord to the Ministry of Agriculture. The State to do the planting and to pay 90 per cent of the total expenses, the balance being paid by the Administration of the Kirghiz. Contracts of this kind were begun in 1908 and by 1913 some 1 300 000 acres has been planted.

Every year the forest officers make a report of the work done in their districts as well as recommendations for the further development of the scheme.

*Methods employed for fixing the surface of shifting sands.* — Experiments in Nortern Astrakan have shown that *Salix acutifolia* Wild. can have an excellent binding effect on the surface of sands. Cuttings taken from the tips of the branches are merely placed in a plough furrow. The method is simple and inexpensive, costing about 6*s* per acre and at the end of three or four years not only is the capital expenditure repaid, but the land may have risen in value to the extent of another 6*s* per acre.

In the southern part of the province, where the sandy area is greatest, reclamation is carried eithr by planting cuttings of *Salix acutifolia* and *S. caspica* Pall (1) ("narym-tala") or young plants of *Pterocaccus aphyllus* Pall (2) ("djuzgun") and *Calligonum* spp. (3) ("Kandym") or by use of herbaceous crops, The latter is the more common method, as planting is comparatively expensive (£ 3 to £ 5 per acre), and require besides some sort of protection from the wind, such as parallel wind screens about 9 ins. high and 13 ft. apart costing £ 1 10*s* to £ 3 per acre. Plantations too, require after cultivations in the form of hoeings and weedings. Herbaceous plants on the other hand are not only less costly to grow, but

(1) According to VISOTZKI, in *Bulletin of Applied Botany* No. 10-11, 1915, p. 1240.

(2) Cf. *Agricultural Encyclopaedia*, Vol. IX. p. 482. Petrograd 1905. Publishers, A. E. DEVRIEN.

(3) Cf. *Id.* Vol. X, p. 143. Petrograd 1907.

cover the surface with crops which are of great and immediate value to the population.

Where the conformation of the land will allow it, surface vegetation will gradually appear if the soil is left quite undisturbed. *Elymus arenarius* and *Agriophyllum arenarium* are the first to establish themselves and their roots rapidly spread over the surface and down into the sand to a depth of even 5 or 6 yeards. Later other species appear, gradually covering the surface and protecting the sand from the action of the wind.Then finally the two first comers disappear and their places are taken by *Artemisia maritima* which provides excellent sheep pasture. But to complete this process, 20 or 30 years are required and it is generally more satisfactory to hasten matters by artificial methods, at least on some parts of the area, so that centres for seed distribution may be formed and help in the natural reclamation of the land. Usually the procedure is as follows: a survey is made of the area, to pick out places which are sheltered from the wind, such as the hollows of the dunes. Seed of *Elymus arenarius* and *Agriophyllum arenarium* is then sown in patches of about one square yard on these selected spots and at the rate of 3 to 6 lbs. of each per acre. The crests and flanks of the dunes, where seedlings would at once be destroyed, are not touched.

All seeds are supplied from Government seed stations of which 10 are already established and occupy 35 acres of land. Cuttings and young woody plants are also raised in Government nurseries. Those in the north of the province grow pines, birches, oaks, black poplar, etc.,while those in the south produce robinia, apricots, *Pterococcus aphyllus* and *Calligonum* spp., the total area under nurseries being 150 acres.

Replanting is only just in its initial stages. In 9 years not more than 45 acres have been planted besides 3 gardens and 4 vineyards occupying about 11 acres. The real obstacle to progress in this direction is the uncertainty as to whether the greater part of the province of Astrakan is adapted to the establishment of forests; but with the institution of the special State Service referred to above, the question will receive proper attention and in the event of a favourable report, planting will proceed more vigorously.

MANURES AND MANURING

1165 – **Research on Superphosphates.** — PRATOLONGO U., (Agricultural High School, Milan) in *Annali di Chimica applicata*, Vol. VI, Nos. 3 and 4, pp. 59-112. Rome, 1916.

The mechanical condition of superphosphates is a most important factor in estimating their value, as unless the manure be dry and in a very fine state of division it is impossible to spread it evenly on the land. In order to determine how the friability and dryness are affected by the conditions of its manufacture investigations were made on the constitution of the substance in the various stages of the process. The results are summarised as follows:

1) Superphosphate contains three chief constituents, calcium sulphate, mono-and dicalcium phosphate, which are found in a more or less hydrated condition and under various crysralline forms. Calcium sul-

phate may be present either as the anhydrous salt or as gypsum. In ordinary superphosphates the former predominates, usually almost exclusively ; where however the superphosphate has been prepared from bones and with limited quantities of sulphuric acid, the calcium sulphate is then nearly all in the form of gypsum. Monocalcium phosphate is commonly $CaH_4 (PO_4)_2 H_2 O$, but the anhydrous salt is not rare and has a very definite effect on the character of the manure. The same applies to dicalcium phosphate.

2) Superphosphate also contains a certain amount of moisture, its so-called " liquid phase " which consists essentially of a solution of phosphoric acid and phosphate of lime, and which largely controls the mechanical condition of the manure.

3) The investigations in this connection have made it possible to define exactly what is meant by " true moisture " and " free phosphoric acid ", terms which have been used somewhat loosely up to the present. An examination of the relationship between the chemical and physical properties of the superphosphate have shown that the state of division is intimately connected with the measure of its liquid phase and still more directly with its true moisture, or in other words, with the water present in a liquid form as distinct from water of crystallisation. Further the degree of fineness of the superphosphate also varies with the amount of free phosphoric acid in the fertilizer. Two methods are suggested for the determination of true moisture, both being based on the solubility of the free water in cold alchohol. This alchohol extract may also be used for estimating free phosphoric acid.

4) The investigation in to the conditions of the manufacturing proces as affecting the constitution of the product has shown that the state of hydration in which mono-and dicalcium phosphate are deposited and the content of free phosphoric acid in the fertilizer are regulated by the temperature curve of the reaction and by the dilution of the sulphuric acid employed. Both free phosphoric acid and true moisture (taken as the difference between total moisture and that retained as water of crystallisation) increase with the temperature. Other conditions being equal the free phosphoric acid content also varies with the strength of the sulphuric used.

5) In the industrial process, calcium sulphate is first deposited in the anhydrous form or rarely in the semi-hydrated form ($2 CaS_4 OH_2 O$) ; gypsum, when present, may be looked upon as a secondary product resulting from the hydration of the two above compounds. Mono and dicalcium phosphates on the other hand are deposited as anhydrous or hydrated salts according to the temperature and composition of the liquid in which they are formed, and these two related factors govern the mechanical condition of the resulting superphosphate..

Once the relationship has been established between the temperature curve of the reaction and the properties of the substance produced, it is easy to organize means of regulating the process by adjusting the heat of the reagents, the quantity of acid used, the degree of fineness to which

the raw phosphate is ground, the size of the charge put into the mixer and the duration of the mixing, the aeration of the reaction chamber. With proper adjustment it is possible to convert the whole of the raw phosphate into soluble phosphate and to obtain in the finished product a very fine state of division.

In a general way the temperature of the mixture is kept between 60° and 100° C. Outside these limits, which vary slightly with the acidity, a perceptible increase of the liquid phase is brought about which exercises a marked influence not only on the state of subdivision of the immediate product, but also on its successive transformation. This may even confer definite hygroscopic properties to the mass and may completely prevent the secondary formation of gypsum at the expense of anhydrite which is a change conferring on the ultimate product a high degree of dryness and fine subdivision.

The experiments confirm the results of practical experience in manure works, *i. e.* that in order to obtain a fine dry superphosphate the temperature in the mixer should not exceed 100° C.

1166 – **Substitutes for Basic Slag in Italy.** — MENOZZI A., in *Le Stazioni sperimentali agrarie italiane*, Vol. XLIX, No. 1, pp. 7-9. Modena, 1916.

Before the war, the annual consumption of basic slag in Italy surpassed 30 000 tons, the greater part of which came from abroad. Since August 1914, however, imports have almost ceased. Basic slag has always been recommended in preference to superphosphate on soils poor in lime and rich in organic matter, but on many such soils superphosphate has given excellent results. PRATOLONGO has recently shown by his work at the Milan Agricultural High School that such soils have a considerable power of absorption for phosphoric acid in the form monocalcium phosphate, *i. e.* in the form present in superphosphate. He showed further: 1) that the phosphoric acid is very rapidly absorbed by hydrates of iron and aluminion so that there is no chance of its being washed away; and 2) that superphosphate, though an acid manure, can be added to the soils containing no lime without giving the soil an acid reaction. It is therefore evident that applications of superphosphate on non-calcareous land are not always followed by the ill-effects one might fear.

It is only when dealing with bogs or sour peats that superphosphate is really unsuitable and in these cases either bone meal may be used, or basic superphosphate which has been on the Italian market for some time and whose output could easily be increased should the demand for it arise.

1167 – **Iodine Content of Stassfurt Salts.** — WINKLER L. W. in *Zeitschrift für angewandte Chemie*, Year XXIX, No. 71, pp. 342-343. Leipzig, September 5, 1916.

Hitherto determinations of iodine in Stassfurt salts have given discordant results. A series of very accurate analyses were therefore carried out on carnallite and sylvine. The method employed is fully described. Quantities of iodine found in the two minerals were as follows:

| | | mgms. of iodine per 1000 gms. of substance |
|---|---|---|
| *Sylvine* | colourless, crystalline | 0.0 |
| " | hyaline crystals | 0.0 |
| " | colourless crystals | 23.7 |
| " | crystalline light yellowish red | 13.7 |
| " | " yellowish red | 73.1 |
| " | colourless crystals | 0.0 |
| *Carnallite* | crystalline yellowish | 5.0 |
| " | " grey | 4.5 |
| " | " red | 0.0 |
| " | " pink | 0.0 |
| " | colourless crystals | 0.0 |

None of the samples analysed contained potassium iodate. In sylvine, the iodine was present as potassium iodine and in carnallite it was probably in the form of $KI.Mg.I_2.6H_2O$. Crude bromine was also tested for iodine, with negative results.

1168 – **Effect of Varying Amounts of Admixed Water upon the Decomposition of Crude Calcium Cyanamide and the Formation of Dicyanamide.** — HAGER G., and KERN J., in *Zeitschrift für angewandte Chemie*, Vol. XXIX, pp. 221-223, 1916; abstract in *Journal of the Society of Chemical Industry*, Vol. XXXV, No. 15, pp. 856-857. London, August 25, 1916.

Quantities of crude calcium cyanamide of 100 gms. each were treated separately with 5, 10, 15, 25, and 50 gms. of water and enclosed in air-tight glass vessels. After 5 or 7 months the material was analysed by CARO's method. The fertiliser used contained: total nitrogen 18.62 per cent, of which 17.73 was water soluble, cyanamide nitrogen 16.75 per cent, nitrogen as dicyanamide 0.50 per cent, as ammonia 0.24 per cent, and as "urea" nitrogen (*i. e.* the element left in the filtrate after precipitation of the dicyanamide) 0.48 per cent.

Seven months storage without water caused no perceptible change: with 5 and 10 gms. of water, the changes were very small, the dicyanamide nitrogen rising to 0.61 and 0.87 per cent respectively. The presence of 15 gms of water produced more change: the dicyanamide nitrogen rose to 1.13 per cent, the urea nitrogen to 0.71 per cent the cyanamide nitrogen fell to 13.61 per cent, and the ammonia nitrogen to 0.14 per cent. Very little change took place in the first ten days when 25 gms. of water was added but after 7 months, 2.58 per cent of dicyanamide was found. With 50 gms. of water profound changes took place and the material set to a hard stone like mass; after 2 ½ months and 7 months, the dicyanamide nitrogen rose to 7.51 and 9.17 per cent respectively, the cyanamide nitrogen falling to 2.81 and 0.28 per cent respectively in the same periods. Calcium cynamide should not be stored after it has become wet but it may be used immediately; the use of water to produce it in a granulated form is not likely to succeed.

1169 – **Manurial Experiments with Manganese Slag in Germany** — Popp M., in *Fühlings Landwirtschaftliche Zeitung*, Vol. 65, Nos. 15 and 16. pp. 354-360. Stuttgart, August 1 and 15, 1916.

Manganese slag is obtained in large quantities in Germany as a bye-product in the manufacture of ferromanganese and spiegleisen. Its average chemical composition is given below :

| | per cent | | per cent |
|---|---|---|---|
| Manganese | 24.4 | Magnesia | 6.3 |
| Silicic acid | 30.5 | Sulphur | 1.2 |
| Alumina | 9,8 | Iron | traces |
| Lime | 33.4 | | |

The manganese is insoluble in water, but slowly soluble in weak acids. Its percentage occasionally rises to 30.

A series of pot experiments were carried out in which the manurial value of the manganese slag was compared with that of anhydrous manganese sulphate. The slag was used in a powdered form similar in fine ness to basic slag. It contained 18 per cent of manganese and 32.26 per cent of silicic acid, and was applied to sandy soil made up of :

| | per cent | | per cent |
|---|---|---|---|
| Gravel | 5.85 | Lime | 0.28 |
| Coarse sand | 15.10 | Phosphoric acid | 0.14 |
| Fine sand | 49.75 | Potash | 0.13 |
| Clay | 29.30 | Nitrogen | 0.15 |

Each pot contained 10 kgs of soil and received 1 gm. phosphoric acid, 1,5 gm. potash, 1,5 gm. nitrogen and 60 gms. of calcium carbonate in the form of marl, besides dressings ranging fro 0.5 to 10 gms. of man ganese either as sulphate or as slag. White Petkus oats were sown on April 17 and harvested July 17. Manganese slag increased the yield of both grain and straw in proportion to the amount applied except where the maximum dressing was used. In small amounts (0.5 and 1 gm) manganese sulphate was more effective than slag, but with the larger applications (2.5 and 5 gms). the order was reversed. Taking the maximum increase in yield as 100, the results of the experiments are as follows :

| Amount of manganese applied | Increase in yield due to manganese | |
|---|---|---|
| | Slag | Sulphate |
| gms. | | |
| 0.5 | 13 | 33 |
| 1.0 | 44 | 52 |
| 2.5 | 69 | 62 |
| 5.0 | 90 | 57 |
| 7.5 | 100 | — |
| 10.0 | 91 | — |

With manganese slag the grain was affected more than the straw ; with manganese sulphate the reverse was the case. Increase in yield due

to slag varied in the first place with the size of the dressing and the solubility of the manganese, and to a less extent, with the nature of the soil and its manganese content.

Further experiments are recommended in order to decide whether heavy dressings of manganese slag may be employed with profit by farmers.

1170 – **Comparative Study of the Root Systems and Leaf Areas of Corn and the Sorghums.** — MILLER E. C., in *Journal of Agricultural Research*, Vol. VI, No. 9, pp. 311-331. Washington, May 29th 1916.

AGRICULTURAL BOTANY, CHEMISTRY AND PHYSIOLOGY OF PLANTS

During the summers of 1914 and 1915 a series of investigations was conducted to determine the fundamental characteristics possessed by the sorghum plants (*Andropogon sorghum*) which enable them to withstand severe climatic conditions better than the corn plant (*Zea Mays*). The present paper deals with the comparative study of the root systems and leaf areas of corn and of the sorghums Blackhull Kafir and Dwarf Milo. These experiments were carried on at the State Branch Experiment Station at Garden City, Kansas, in latitude 37° 58′ north and longitude 100° 55′ west (Greenwich) and at an altitude of 2940 feet.

The root systems of Pride of Saline corn, Blackhull Kafir and Dwarf Milo sorghum plants which were grown in alternate rows, were isolated in the field at four stages of growth in 1914 and at three stages of growth in 1915. All told, the root systems of 33 plants were isolated and studied. It was found that for a given stage of growth each plant possessed the same number of primary roots and that the general extent of these roots in both a horizontal and vertical direction was the same for all three plants. The maximum depth of root penetration for mature Dwarf Milo, Blackhull Kafir, and corn was found to be 6 feet for both the years 1914 and 1915. Blackhull Kafir and Dwarf Milo possessed approximately twice as many secondary roots per unit of primary root as did the corn plant. This is true not only for both years but also for all stages of the root systems examined. Both primary and secondary roots of the sorghums were found to be more fibrous than those of the corn plant.

The relation of the weight of the dry matter of the aerial portions of mature plants to the weight of the roots was determined in 1914 for 36 Dwarf Milo plants, 30 Blackhull Kafir plants and 12 corn plants. In 1915 the same determinations were made for 24 Dwarf Milo, 14 Dwarf Blackhull Kafir, 23 Blackhull Kafir and 24 corn plants.

The average ratio of the dry weight of the grain, stem and leaves of standard Kafir to the dry weight of the roots was found to be 15 and 14.9 for the years 1914 and 1915 respectively, while the dry weight of the stem and leaves of the same plant was on the average 10.9 times that of the root weight in 1914 and 10.1 times the root weight in 1915. For Dwarf Milo the corresponding figures were 15.7 and 15; 9.6 and 8 respectively. For corn the weight of the stem and leaves was 9.6 times the root weight in 1914 and 7.8 times in 1915. For Dwarf Blackhull Kafir in 1915 the figures were 15.7 with the grain and 8.9 without the grain.

The results of the experiments in regard to the soil-moisture content and depth of root penetration seem to show that under the conditions of the

experiment very little, if any, depletion of soil moisture took place below the depth of root penetration.

The average leaf areas of five representative plants of corn Blackhull Kafir and Dwarf Milo were obtained at stages when the plants were 4, 6, 8 and 10 weeks of age. The last stage examined showed that the plants had completed their full leaf development. In all the stages of growth the corn plant was found to have the greatest leaf area. Taking the stages of growth in order, the leaf area of the corn plant was 1.7, 2.0, 2.2 and 2.3 times the leaf area of Dwarf Milo and 1.6, 1.9, 1.5 and 1.5 times of that Blackhull Kafir.

From the experimental results it is apparent that the Dwarf Milo and Blackhull Kafir plants would have the advantage over the corn plant under any climatic conditions that would tend to bring about a loss of water from these plants. The two sorghums have, in the first place, as compared to the corn plant, only one-half the leaf surface exposed for the evaporation of water; and in the second place they have a root system which, judging from the number of secondary roots, would be twice as efficient in the absorption of water from the soil.

1171 – **Barium in Tobacco and Other Plants.** — ARTIS B., and MAXWELL H. L., in *Chemical News*, Vol. 114, No. 2959, pp. 62-63. London, August 11th 1916.

Other workers (1) have found barium in various plants and, as this element is widely distributed in soils, the question has arisen as to whether it is really a plant food, although it has not been found in all the species analysed. The writers of this article have examined the leaves and stems of tobacco grown in various places and also the leaves of several other plants, some of which were grown on soils containg 0.1312 per cent of barium sulphate. The chief results are summed up in the appended Table.

TABLE I. — *Proportion of barium in tobacco grown in different places.*

| Kinds of tobacco and districts where grown. | Leaves | | Stems | |
|---|---|---|---|---|
| | Ash | Barium sulphate | Ash | Barium sulphate |
| | per cent | per cent | per cent | per cent |
| Havana tobacco from Cuba | 20.85 | 0.0008 | 25.68 | 0.0760 |
| Broad leaf, grown in Pennsylvania | 21.98 | 0.0648 | 21.62 | 0.0780 |
| Havana seed grown in Connecticut | 20.11 | 0.0600 | 19.38 | 0.0720 |
| Pennsylvania tobacco, grown in Pennsylvania | 21.48 | 0.0980 | 24.28 | 0.1280 |
| Sumatra tobacco | 20.87 | 0.0308 | 24.73 | 0.0408 |
| Winconsin tobacco, grown in Wisconsin | 21.62 | 0.0192 | 24.49 | 0.0280 |
| Tobacco grown in New York State | — | 0.0132 | — | 0.5040 |

(1) See *B.* August 1913, No. 924. (*Ed.*)

TABLE II. — *Proportion of barium in the leaves of various plants.*

| Species | Time of cutting | Barium sulphate |
|---|---|---|
| | | per cent |
| Dogwood | autumn | 0.0224 |
| Cotton wood | autumn | 0.0052 |
| | spring | 0.0528 |
| Cherry | autumn | 0.0392 |
| | spring | 0.0134 |
| Black locust | autumn | 0.0324 |
| Mulberry | autumn | 0.0696 |
| Elm | autumn | 0.0356 |
| | spring | 0.0182 |
| Linden | autumn | 0.0152 |
| Wild olive | autumn | 0.0048 |
| Plum | autumn | 0.0372 |
| Box elder | autumn | 0.0360 |
| | spring | 0.0295 |
| Hard maple | autumn | 0.0368 |
| Walnut | autumn | 0.0752 |
| Pear | autumn | 0.0196 |
| Soft maple | spring | 0.0273 |
| Wild grape | spring | 0.0941 |
| Wild cherry | spring | 0.0336 |
| Lime | spring | 0.0435 |
| Elderberry | spring | 0.0143 |
| Black walnut | spring | 0.0096 |
| Sumac | spring | 0.0071 |
| Blackberry | spring | 0.0086 |

1172 - **Cereal Selection in Croatia, Austria Hungary.** — MANDEKIC V., in *Zeitchrift für Pflanzenzüchtung*, Vol. II, Part. 2, pp. 161-192. Berlin, June 1916. PLANT BREEDING

*Wheat.* — The selection of wheat was first carried out at Krizevci Agricultural High School, and dealt with indigenous and foreign varieties, the former proving to be the less productive. Among foreign varieties Sirban Prolific has given the best results up to the present. Its pedigree is unknown, but probably it is derived from a spring wheat. During five years experiments Sirban Prolific has given consistently higher yields than the wheats Banat, Früher Bastard, Renodlad, Golden Perle, Extra Squarehead, Imperial, and the best indigenous varieties. It has however the disadvantage that it cannot stand the winter cold. In 1911-1912 some hundreds of ears of Sirban Prolific were selected and the seeds were sown the following year. The best lines that were thus obtained were Red Sirban Prolific, White Sirban Prolific, Rust-resisting Red Sirban Prolific, Sirban Prolific with dark grey ears, Grey bearded Sirban Prolific.

As soon as the value of this variety was recognised, attempts were made to cultivate it in other parts of the country with satisfactory results.

In Croatia it is now grown on about 287 500 acres per annum, and much seed is exported to Dalmatia, Istria, Carinthia, Bosnia and Herzogovinia, where it is much appreciated. The selected lines mentioned above are not yet in the market, except one which is already well adapted to the needs of the country.

Selection at Krizevci is specially directed towards obtaining lines which are proof against lodging, rust, and winter cold. Wheat selection is also carried out in Croatia at the Plant Breeding Station on the Vukovar estate (recently founded by Count ELTZ) and at the Ruma Station on the Pejacsevich estate.

*Rye.* — Foreign varieties of rye are less suited to the conditions obtaining in Croatia. The best results are obtained with indigenous varieties, especially with Potocec rye, which is very robust, possesses good straw, does not lodge, tillers well and has a long ear with long awns. The quality of the grain is good, with an average yield.

The aim of the work at Krizevci has been to obtain an early rye giving a good crop, but resistant to winter cold and to diseases. The method adopted is that of pedigree culture. Some good strains have already been secured, but they have only recently been distributed to the growers. It is hoped that by this means the rye production of the country will be considerably increased.

*Barley.* — Indigenous varieties are chiefly grown in Croatia, as foreign sorts are less resistant to rust. The former are early, not very susceptible to rust, and are of good quality, but their yield is not very high. All the winter sorts need to be sown early in order that the plants may make good root growth in the autumn. Those that have been selected are of good quality but the straw is weak so that they lodge easily.

With spring sown barley the best results have been obtained with foreign varieties. A 2-rowed barley derived from the original Kwassitzer Hanna by mass selection is particularly good. Since 1913, individual selection has been carried out. The aim has been to obtain a very early variety with a fairly stout straw, which tillers well and produces a long ear with uniform grains of low nitrogen content, furnished with thin glumes.

*Oats.* — Experiments have shown foreign varieties are much more productive than the native kinds. One of the best is Duppau which was imported from Hungary, but, in wet seasons it is badly attacked by rust. The best kinds are those with thin leaves, e. g. Heine, which has been submitted to individual selection since 1912.

*Maize.* — The first maize to be selected was an indigenous variety, Round Croatian, which has been grown for some years in the experimental plots at Krizevci. In addition Pignoletto, American Horse-tooth and a very early variety Hangarii, derived form the high plateau of Bosnia, have been selected in order to obtain strains possessing ears with numerous straight rows of grains with much horny starch. In addition to this attention has been paid to the self-fertilisation and cross fertilisation of maize.

1173 - **Agricultural Value of Impermeable Seeds.** — HARRINGTON, G. T., in *Journal of Agricultural Research.*, Vol VI., No. 20, pp. 761-796. Washington D. C., August 14, 1916. AGRICULTURAL SEEDS

During the years 1909 to 1916 many germination tests of the seeds of clover, lucerne, winter vetch, okra (*Hibiscus esculentus* L.) and other plants were made for the purpose of determining the agricultural value of the impermeable seeds.

Impermeable seeds are those whose coats are impermeable to water at temperature favourable to germination. Such seeds have been described by numerous investigators under the term "hard seeds"; the more appropriate term "impermeable seeds" was introduced by GUPPY and is used in the present paper.

Some plants, cultivated or wild, produce both impermeable and permeable seeds; the percentage of impermeable seeds has been determined for some of these species, as follows:

*Percentage of impermeable seeds in some cultivated plants.*

| | per cent |
|---|---|
| *Trifolium pratense* L. | 9.61 |
| *T. hybridum* L. | 10.16 |
| *T. repens* L. | 17.30 |
| *Melilotus alba* Desv. | 42.39 |
| *Medicago sativa* L. | 13.81 |
| *Vicia villosa* Roth | 20.97 |
| *Vicia sativa* L. | 0.96 |
| *Vigna sinensis* (Torner) Savi | 3.55 |
| *Medicago hispida denticulata* (Willd) Urban | 48.08 |
| *Medicago arabica* L. | 71.67 |
| *Medicago sativa falcata* (L) Döll | 49.72 |
| *Medicago lupulina* L. | 10.45 |

Most of the work reported in this paper was done with the seeds of red clover, alsike clover, white clover, white sweet clover, alfalfa, hairy vetch (*Vicia villosa* Roth) and okra. Some work was also done with crimson clover (*Trifolium incarnatum* L), black locust (*Robinia pseudacacia* L), kidney bean (*Phaseolus vulgaris* L), pea (*Pisum sativum* L), cowpea (*Vigna sinensis* Sair) and *Chamaecrista nicitans* L. Muench.

The following conclusions were reached: It is impossible to distinguish between impermeable and permeable seeds except by testing their ability to absorb water at a temperature favourable for germination. The production of impermeable seeds is particularly characteristic of the Leguminosae, but it occurs also in many other plant families. Among the cultivated species which sometimes produce impermeable seeds are okra, hollyhock (*Althaea rosea* [L] Cav.), *Erodium cicutarium* [L] l'Her., *Atriplex* spp., asparagus, morning glory (*Ipomaea purpurea* [L] Lam), canna (*Canna indica* L.), cherry tomato (*Physalis pubescens* L.) and nearly all the cultivated species of Leguminosae.

Impermeable seeds frequently retain their vitality for many years, sometimes for at least as many as 80 years. Fresh impermeable seeds

germinate promptly when the seed coat is broken or becomes permeable. The viability of fresh impermeable seeds is frequently greater than that of fresh seeds of the same species which are permeable. Seeds of the common clover, alfalfa and hairy vetch which are impermeable at the end of three to five years under laboratory conditions of storage retain their vitality apparently unimpaired up to that time. The viability of the permeable seeds in the same lots decreases slightly in the second and third year and more in subsequent years.

In dry storage nearly all impermeable alsike clover, white clover and sweet clover seeds remain impermeable until at least 2 or 3 years old. Impermeable red clover seeds become permeable gradually in dry storage, but from one third to two thirds of them may still be impermeable after four years. Okra seeds become less permeable as their age increases.

In wet blotting paper nearly all impermeable lucerne, crimson clover, hairy vetch and okra seeds soften and germinate in one year, though a very few may remain impermeable even after three or four years. Impermeable seeds of red clover, alsike clover, white clover and sweet clover soften and germinate more slowly, but with no uniformity as to rate. All germinate within one year in some cases, while in other cases, over 50 per cent are still impermeable after four years.

Impermeable clover seeds which were thoroughly matured before harvesting soften and germinate more slowly under conditions favourable for germination than do impermeable seeds of the same species which were less well matured ; they also become permeable more slowly in dry storage. Impermeable seeds become permeable more rapidly in wet blotter than in dry storage.

It is impossible to estimate even approximately in advance the proportion of the impermeable seeds in any given lot which will germinate in any given length of time under ordinary germination conditions. A widely variable proportion of the impermeable seeds of lucerne, crimson clover and the larger seeded commercial species included in the investigation produce seedlings promptly in the soil under greenhouse conditions or in the open field in warm weather. Only in exceptional cases is this true of the impermeable seed of the clovers, other than crimson clover.

The use of aqueous extract from soil has no effect, and alternate wetting and drying of the seeds has but little effect on the germination of impermeable seeds.

Within ordinary limits, neither the depth of planting nor the firmness of the soil affects the germination of impermeable clover and lucerne seed under greenhouse conditions. These factors may affect the stand secured by preventing some of the seedlings from reaching the surface.

Storing impermeable clover and lucerne seeds at a temperature of 122° F. for one day or 113° for six months has little or no effect upon their germinating capacity or permeability.

In wet blotting paper a temperature of 107° F. very slightly increases the softening of the impermeable seeds, but it also kills some of the seeds

Freezing when wet causes the subsequent germination of many impermeable seeds, but may kill some seeds which had previously softened. Any constant temperature from 34° F. has little effect upon the softening of impermeable clover seeds. Alternations of temperature have but little effect on the softening and germination of impermeable clover and alfalfa seeds if none of the temperatures used in the alternations are below 68° F.

Alternations of temperature cause the softening and germination of many impermeable clover seeds when a temperature of 50° F or cooler is used in alternation with a temperature of 68° F or warmer. The effect of such an alternation of temperatures is greatly increased by previously exposing the seeds to germination conditions at a cool temperature (50° F. or cooler), and is decreased by previously exposing the seeds to germination conditions at a warm temperature (86° F.)

Even under the most favourable conditions only a small proportion of impermeable red clover, alsike clover, white clover and white sweet clover seeds produce seedlings promptly when sown in warm weather.

Impermeable seeds of red clover, alsike clover, white clover and white sweet clover will pass the winter in the soil in a freezing climate without injury. A least 50 or 60 per cent of them may be expected to germinate in the soil the following spring unless some of them germinate during warm weather in the winter. If this occurs, the seedlings produced in the winter are liable to be killed by subsequent freezing.

A large proportion of impermeable lucerne, crimson clover, okra and hairy vetch seeds will germinate in the soil during the first few months after planting, some of them early enough to be of importance to the crop. Nearly all lucerne and okra seeds, even if they are impermeable in the autumn, are killed when they pass the winter in the soil or on the plants out of doors in a freezing climate. A small proportion of the impermeable lucerne seeds survive with their vitality uninjured. Some of the okra seed remain impermeable during the winter, but the majority even of those which remain impermeable are killed by the winter's exposure.

The following general rules, based upon the above conclusions and the experimental results, are suggested as guides in agricultural practice with impermeable seeds :

a) *When seed is to be sown in the late spring or summer.*

Consider one tenth of the impermeable seed as good. Add one tenth of the percentage of impermeable seed to the percentage of germination. Calculate from this sum the quantity of seed of the given lot necessary to give the desired quantity of good germinable seed. This may be expressed in the form of an equation, thus :

$$\text{Number of lbs. to sow per acre} = \frac{\text{Number of lbs. of good seed desired per acre}}{\text{Percentage of germination} + {}^{1}/_{10} \text{ percentage of impermeable seeds}}$$

For example, suppose it is desired to sow per acre 15 lbs. of viable seed, none of which is impermeable. Fifty per cent of the lot of seed to be used germinates and forty per cent is

impermeable. Considering one tenth of the latter, or 4 per cent, as good, then the amount of seed required per acre would be

$$\frac{15}{0.50 + \frac{0.40}{10}} = 27.8 \text{ lbs.}$$

The impermeable seeds remaining in the soil during the winter will help to improve any thin areas in the stand the following spring, but this, however, should not be counted upon.

b) *seeding in the late autumn or winter or in the spring a month or so before the end of freezing weather*:

Consider all the impermeable seeds as good. Add the percentage of impermeable seeds to the percentage of germination. Using the figures as in the preceding case (*a*) the quantity of seed to use would be

$$\frac{15}{0.50 + 0.40} = 16.7 \text{ lbs.}$$

c) *When seeding in the spring after danger of severe frost is past, but a month or more before the end of cool weather*:

The general formula is

$$\text{Number of lbs. to sow per acre} = \frac{\text{Number of lbs. of good seed desired per acre}}{\text{Percentage of germination} + {}^{2}/_{3} \text{ of impermeable seeds.}}$$

With the same figures as before the quantity of seed required would be

$$\frac{15}{0.50 + {}^{2}/_{3}\,(0.40)} = \frac{15}{0.50 + 0.26} = 19.7 \text{ lbs.}$$

2. Lucerne and crimson clover.

The formula is again

$$\text{Number of lbs. to sow per acre} = \frac{\text{Number of lbs. of good seed desired per acre}}{\text{Percentage of germination} + {}^{2}/_{3} \text{ percentage of impermeable seeds.}}$$

More than two-thirds of the impermeable seeds may germinate, but the excess should not be reckoned on.

3. Hairy Vetch.

$$\text{Number of lbs. to sow per acre} = \frac{\text{Number of lbs. of good seed desired per acre}}{\text{Percentage of germination} + {}^{1}/_{2} \text{ percentage of impermeable seed.}}$$

4. Okra.

$$\text{Number of lbs. to sow per acre} = \frac{\text{Number of lbs. of good seed desired per acre}}{\text{Percentage of germination} + {}^{1}/_{4} \text{ percentage of impermeable seeds.}}$$

More than one fourth of the impermeable seed will probably germinate but too late to contribute to a uniform stand.

1174 – **The Seed of *Commelina communis* L. Characteristic of Seed Samples derived from the Maritime Region of Eastern Siberia.** — Исаченко В. Л. (Issatchenko B. L.), *Записки Станціи для испытанія сѣмянъ при Императорскомъ Ботаническомъ Садѣ Петра Великаго въ Петроградѣ* (*Annals of the Seed Control Station at the Imperial Garden of Peter the Great at Petrograd*), Vol. III, Part 5, pp. 3-27. Pétrograd, 1916.

As an auxiliary means of determining the place of origin of crop seeds recourse may be had to the identification of the weed seeds which occur mixed in the samples. This method demands numerous analyses of

samples of seeds of cultivated plants and a complete botanical analysis of the weed seeds in order to be certain which of the latter may be considered as characteristic of a given district.

The investigations here described were made on seed samples from the maritime region of eastern Siberia, and were supplied to the seed control station by the Department of Agriculture. The samples were taken during the winter of 1910-1911, and they all belonged to the 1910 harvest. They were representative of the condition in which the farmers send the grain to the market or mill; this material obtained direct from the the producers was exceedingly valuable for the botanical analysis of weed seeds.

The district was divided into seven zones according to the methods of cultivation adopted, and the results were grouped to correspond. This division, however, has no direct bearing on the problem in hand, and it has only been used in drawing up the tables for the benefit of those who desire to study the farm seeds used in the district.

Seed samples of cereals (wheat, rye, oats, barley), buckwheat and flax were examined. It appears that *Commelina communis* L. family Commelinaceae Reich. is widely distributed in the district. In view of the fact that this plant is completely absent in samples of cereals derived from western Siberia, which have been analysed at this Station, it is considered that the presence of seeds of *Commelina communis* L. may, be taken as an indication that the samples come from eastern Siberia, probably from the maritime region.

In 1913 and 1915 *Commelina communis* seeds from the 1910 harvest were sown in the Imperial Botanic Garden of Peter the Great, at Pétrograd, and they grew well in every case. This shows that the seeds retain their germinating capaciy for a long time (it was still about 55 per cent at the end of six years and that the plant will grow in the west.

*Commelina communis* seeds are earth colour and resemble bits of earth in shape. The dimensions are : length, 2 to 4 m.m, breadth 1.5 to 2.9 m.m ; on the average, the length is 2.7 m.m., breadth 2.3 mm. The weight of 1 000 seeds averages 7.9 gms. and the weight of a single seed varies from 0.005 to 0.011 gm.

In Manchuria the colouring matter of the petals of *Commelina communis* is used to dye cotton thread blue.

Among the harmful weed seeds found in the samples analysed, attention was attracted to those of *Agrostemma Githago*, which were much larger and heavier than the seeds of the same plant derived from certaiu localities of Russia in Europe (1). In this connection the following data may be given.

*Avena fatua* was also found. This has hitherto been regarded as unknown in the district under consideration but these experiments indicate that it must have been imported with cereal seeds ; it is now well established even in the extreme East.

(1) See *R.* September 1916. No. 968. (*Ed.*).

*Figures relating to seeds of Agrostemma Githago from different places.*

| Locality | Weight of 1 000 seeds | Dimensions | | | |
|---|---|---|---|---|---|
| | gram | mm. | | | |
| Maritime region | 9.7 | length | 2.6 | x breadth | 2.3 |
| Corncockle from the same region grown at Pétrograd | 9.08 | » | 2.9 | x » | 2.3 |
| Province of Esthonia | 5.8 | » | 2.2 | x » | 1.9 |
| Province of Volhynia | 9.0 | » | 2.2 | x » | 2.4 |

The average impurity is 4.38 per cent for wheat and 2.61 per cent for rye.

As regards grain diseases the presence of smut on wheat and *Fusarium* on oats and wheat was noticed. Ergotted rye was not found, and its absence had already been indicated by other workers who had studied the maritime region.

CEREALS AND PULSE CROPS

1175 – **Results Obtained with the New Wheat Carlotta Strampelli in the Regional Experimental Fields in Italy** (1). — STRAMPELLI N., in *Minerva Agravia*, Year XIII, No. 11-12. pp. 123-125. Rome, June 15-30, 1916.

In 1914 the Italian Ministry of Agriculture made arrangements to establish several experimental fields in various agricultural institutes connected with the Ministry. The present paper is the report submitted to the Ministry, chiefly consisting of the various reports sent in by the directors of the agricultural institutes at which the trials were made.

The wheats raised by M. STRAMPELLI fall into two groups.

1) wheats suitable for the valleys of Central and Northern Italy (Gregorio Mendel, Carlotta Strampelli).

2) wheats able to stand drought, suitable for growing in Southern Italy (Dauno, Apulia, Majorca, Strampelli).

As the year 1915, during which the experiments were carried out, was exceptionally wet, the tests made with the second group were valueless. On the other hand, those made with the first group of wheats were specially favoured by the conditions. The experimental results obtained with Carlotta Strampelli wheat are summarised in the following table

At the State School of Viticulture and Wine-Making at Avellino M. GIULIO PARIS tested the effect of liberal nitrogenous manuring (176 lbs sodium nitrate per acre) on the wheats Carlotta Strampelli, Gregorie Mendel and Risciola. The manuring caused the two latter to lodge ; the former did not go down, and it yielded 2 787 lbs of grain per acre.

Tests in different parts of the country will be again repeated before the

(1) See also Dr. G. PATANÈ, The Selection of Cereals in Italy, in *R.* June 1916, pp. 831-842. (*Ed.*)

(2) See *R.* 1915. No. 167. (*Ed*).

| Where and by whom tested | Yield par acre | Remarks |
|---|---|---|
| | lbs | |
| State School of Agriculture, Caluso (Turin province) . . | — | Varieties sent from the Rieti station gave higher yields than the others tested; they also proved less liable to lodging and disease, especially rust. |
| Agricultural organiser of Fabriano . . . . . | 1 764 | Other yields were: Granella di Carpegna . 1 253 lbs; Gregoire Mendel. . . . 1 235 »; Bordeaux . . . . . 1 137 »; The varieties kept the same order in their resistance to rust. |
| Agricultural organiser of Ferrara . . . . . | 2 646 | Higher yield than whit Inversible Vilmorin, Gentil rosso originario, Hybrid 40 Passerini. Rosso Olona, Gentil rosso bolognese N° 16, Cornia. |
| State School of Agriculture, Imola . . . . . | 2 452 | Proof against lodging and rust; free from smut. |
| State School of Agriculture of Padua (at Brusegana) . . . | 2 999 | Very suitable for growing in moist districts. |
| State School of Agriculture of Pozzuolo in Friuli . . . . | 2 425 | Not at all liable to rust or lodging. |
| State School of Agriculture, Voghera . . . . . | 2 576 | Better results than with Rieti, Inversible Vilmorin, Gros Bleu etc. |
| Station Beetroot for Testing, Rovigo . . . . . | 3 042 | Distinguishd by its earliness, heavy yield and resistance to rust. |

new variety is distributed to the public, but up to the present the wheat Carlotta Strampelli, which has given very high yields (up to 3616 lbs per acre) on the Rieti plain without lodging has proved to be equally upstanding in the local test. This resistance to lodging is due to its anatomical structure, as it is rich in radially elongated fibro-vascular bundles arranged in several rows. This structure enables the straw, to bend without breaking, even though battered by the wind and heavy rains. Provided the soil is free from weeds, especially those with climbing stems, the straw recovers itself completely very soon after the storm is over.

1176 – **Hybrid Wheats, Gentil rosso × Noé, obtained by Professor Passerini** (1). — TARUFFI D. *in Giornale di Agricoltura della Domenica*, Year XVI, No. 39, p. 341. Piacenza. September 24, 1916.

Professor PASSERINI has endeavoured to obtain by breeding a variety of wheat with all the good qualities of Gentil rosso, but less liable to

(1) See also, in *R.* June 1916, pp. 831-842, original article by Dr. G. PATANE; "The selection of cereals in Italy".

lodge. Noé was chosen for the second parent because it does not lodge easily and because it has a lower habit and a thicker and more lignified straw than Gentil rosso. Noé possesses two bad characters which need to be eliminated : 1) its liability to rust, caused by late ripening, 2) the exceedingly coarse quality of the straw.

These experiments were begun before 1900 and have been carried out at the Agricultural Institute of Scandicci (Florence) ; they have shown that the cross Gentil rosso × Noé is more successful than the reciprocal cross. After rigorous selection only two of the hybrids have been chosen, known by the number 40 and 46. These hybrids differ essentially from Gentil rosso in that they are of lower habit and that the plants are glaucous like Noé. The ears are hardly any shorter than those of Gentil rosso ; the spikelets are more fan-like at the time of ripening ; the awns of the glumes are stouter and shorter. The grains (caryopses) are light red in colour and somewhat resemble those of Gentil rosso. No. 40 has a very elongated ear which is more like that of Gentil rosso, while No. 46 has a dumpy, thicker ear resembling that of Noé. In the shape of the grains No. 40 comes nearer to Gentil rosso than No. 46 does to Noé.

These hybrid wheats have also been cultivated on the Experimental Farm of the Perugia High School and by various Tuscan farmers of Valdichiana and Valdinievole. They have shown marked productivity and higher degree of resistance to lodging than Gentil rosso, even when heavily manured.

1177 – **Two Good Varieties of Italian Wheat, Gentil rosso and Gentil bianco.** — DE ROSA A., in *Il Coltivatore*, Year 62, No. 26, pp. 234-230. Casale Monferrato, September 20th 1916.

The wheats Gentil rosso and Gentil bianco, have been extensively cultivated in Tuscany from very early times. They spread from this country to many parts of North and South Italy giving excellent results everywhere. The two varieties possess the following qualities : good yield ; great adaptability (particularly Gentil rosso); good resistance to rust and lodging ; high food value. Gentil rosso is suitable for late sowing so that it may also be used as a spring wheat. Both varieties are suitable for cool or even cold districts, and prefer light or heavy loams in good heart. Gentil rosso is less exacting than Gentil bianco as regards soil. The former is chiefly used for bread making.

The following characters distinguish the two varieties.

*Gentil rosso — Ear* : Elongated, oblong in section ; glabrous ; colour tawny, with brown tints shading to red at the edge of the glumes.

*Spikelets* : Rather crowded, glumes fairly long, awned in an increasing degree from the base to the tip of the ear.

*Grain* : Elongated, size average, heavy, colour reddish with darker shades, fracture distinctly starchy.

*Gentil bianco. — Ear* : Elongated, square in section ; glabrous, white with clear yellow shades.

*Spikelets* : Not very crowded ; glumes swollen, slightly keeled in the upper $^2/_3$ somewhat awned.

*Grain* : Rather plump ; size average ; heavy ; colour yellow ; starchy fracture.

*Physico-chemical characters of the grain and flour of the wheats Gentil rosso and Gentil bianco.*

| | « Gentil rosso » | « Gentil bianco » |
|---|---|---|
| Average weight of 100 grains . . . . . grams | 5.4966 | 5.6568 |
| Weight of 1 litre of grains . . . . . » | 800.00 | 808.45 |
| Volume of 1 kilogram of grains . . . . . litres | 1.250 | 1.244 |
| Average weight of 1 hectolitre of grains . . . . . kgs. | 80.000 | 80.345 |
| Volume of 100 kilograms of grains . . . . . litres | 125.000 | 121.463 |
| Number of grains in 1 kilogram . . . . . | 18.200 | 17.680 |
| 100 kgs grain ground in a stone mill and sifted with a 0.5 m.m. sieve yield: | | |
| flour . . . . . kgs. | 81.153 | 80.000 |
| bran . . . . . » | 18.847 | 20.000 |
| Kilograms of water needed to make bread from 100 kilograms of flour . . . . . | 56.390 | 52.500 |
| Kilograms of bread obtained from 10 kg dough . . . . | 83.310 | 87.628 |
| Kilograms of bread obtained from 100 kg flour . . . . . | 104.610 | 127.500 |
| Loss of weight from the dough caused by : | | |
| *a*) fermentation during bread making . . . . . | 6.06 | 4.59 |
| *b*) baking . . . . . | 11.68 | 12.37 |
| *Composition of flour* (1916 crop) : | | |
| Moisture . . . . . % | 9.70 | 10.60 |
| Acidity . . . . . % | 0.057 | 0.068 |
| Moist gluten . . . . . % | 27.40 | 26.80 |
| Starch . . . . . % | 64.98 | 64.26 |
| Reducing substances . . . . . % | 3.42 | 3.38 |
| Nitrogen . . . . . % | 2.080 | 2.038 |
| Protein matter . . . . . % | 13.00 | 12.74 |
| Fats . . . . . % | 1.85 | 1.89 |
| Ash . . . . . % | 0.78 | 0.82 |

1178 – **Seeding Experiments with Single Grains of Wheat.** — MANCINI C., in *La Rivista Agricola*, Year XII, No. 263, pp. 293-294. Rome. Sept. 16, 1916.

The experiments have been made in ordinary soil of good quality but not of exceptional fertility, which might be considered as second-class for wheat cultivation. The variety " Romanello " was planted on

October 25th. on plots of 120 square yards. Plot I was sown with single grains 4 inches apart each way ; Plot II was also sown with single grains, but 8 inches apart each way ; Plot III, which served as a control was sown in the ordinary way, in rows 16 inches apart. The season was not very favourable, because of the dry spring.

The results of the experiment are given in the following Table :

| Plot number | Distance between the grains | Number of grains sown per sq. yd. | Weight of grain sown per sq. yd. | Crop obtained per sq. yd. | (Crop / Seed sown) | Crop per acre |
|---|---|---|---|---|---|---|
| | | | oz. | oz. | | lbs. |
| I . . . . . | 4 inches | 84 | 0.06 | 6 | 100 | 1 700 |
| II . . . . . | 8 inches | 42 | 0.03 | 3 | 100 | 880 |
| III . . . . | in rows | 420 | 0.3 | 3 | 10 | 440 |

It is thus seen that by sowing only 0.06 oz. of seed per square yard, equivalent to 18 lbs. per acre, a crop of 1760 lbs. of grain per acre was obtained, in spite of the unfavourable season. By this method 72 lbs of seed may be saved per acre.

1179 – **The Time to Seed Wheat in Kansas.** — CALL L. E. SALMON S. C., and CUNNINGHAM C. C., in *Kansas State Agricultural College, Agricultural Experiment Station, Bulletin* No. 213, pp. 1-16. Kansas, July 1916.

An account is given of investigations as to the best time to sow wheat when climatic conditions (cold winter, very dry summer etc.), the attacks of Hessian fly (*Cecidomya destructor* Say), and other intervening factors are taken into consideration. The damage caused by Hessian fly has been estimated at 16 million dollars (about £ 3 333 333) for 1915 and 15 million dollars (£ 3 125 000) for 1916. Experiments have been carried out for four years and it seems that in central and eastern Kansas wheat may be sown late enough to avoid most of the injury from Hessian fly, yet early enough on well prepared ground to secure a good growth before winter.

The best date for seeding in north eastern Kansas varies from about September 25 th, to October 3rd ; in south central Kansas from about September 25th to October 7th ; and in north central Kansas from about September 20th to October 1st. The time for seeding in western Kansas depends on the rainfall. It is usually not advisable to seed in dry ground. The land should be prepared early, and seeded when in proper condition to insure germination and good growth.

Wheat may be sown later in rich soil and well prepared ground than in soil that is poor or poorly prepared. Early and thorough preparation not only destroys many of the flies in the stubble, but also enables the wheat to make a more rapid and vigorous growth. Strong wheat plants are damaged less by Hessian fly, and stand more severe winter weather, than

plants which are small and weak. Wheat should be sown somewhat thicker when planted late. Late planted wheat often germinates less freely and usually tillers less, than wheat sown earlier, as is shown in the following Table.

*The effect of the time of seeding on the tillering of wheat.*

| Date of seedinges | Number of tillers per plant | | | | |
|---|---|---|---|---|---|
| | 1912 | 1913 | 1914 | 1915 | Average 4 years |
| September 8 to 11, inclusive . . | 5,8 | 4,8 | 4,8 | 3,6 | 4,7 |
| September 13 to 19, inclusive . | 6,0 | 4,1 | 4,2 | 4,9 | 4,8 |
| September 21 to 25, inclusive. . | 4,3 | 3,1 | 3,8 | 4,1 | 3,8 |
| September 27 to October 2, inclus. | 2,7 | 3,0 | 3,7 | 3,7 | 3,3 |
| October 4 to 9, inclusive . . . | 1,8 | 2,1 | 3,2 | 2,8 | 2,5 |
| October 11 to 17, inclusive . . . | 1,4 | 1,1 | 1,9 | 2,4 | 1,7 |

FORAGE CROPS, MEADOWS AND PASTURES

1180 – **A Study of the Problem of Forage Production in Uruguay, dealing with the use of Artificial Inoculation in the Lucerne Fields.** — MOREIRA A. S., and MENDIZABAL M. F. in *República Oriental del Uruguay, Ministerio de Industrias, Inspección Nacional de Ganadería y Agricultura*, Bulletin No. 18. Montevideo, 1916.

In order to increase the forage production in Uruguay the following crops have been tried:

1) Grass and clover mixtures.
2) Oats.
3) Lucerne.

All these have been more or less unsuccessful. Owing to the geological formation of the soils in Uruguay it is not possible to establish permanent stands of lucerne, as has been done in the Argentine pampas, where the plant continues productive for more than 40 years.

As lucerne could not be grown under irrigation in the fields of the National Inspectorate of Livestock and Agriculture, experiments were made to see whether it could be grown with the aid of deep ploughing and inoculation of the fields with nitragin obtained from the United States Department of Agriculture. In the present paper the results of the second set of experiments are given.

*Preparation of the soil.* — The experimental plots measured 16 ½ × 33 feet, and were on a very light sandy soil containing a fair amount of humus, which had been under potatoes from the spring of 1914 to the middle of January 1915 and had then been left fallow till the beginning of May. The plots were worked to a depth of 19 inches and were then harrowed on May 20th.

*Time and method of sowing; quantity of seed used.* — The four plots

TABLE I. — *Analyses of lucerne hay from plots inoculated with nitragin and from non-inoculated plots (per cent of dry matter at 110° C.).*

| | Organic matter | Ash | Crude fat | Cellulose | Nitrogen | Protein | Phosphoric acid in ash | Calcium oxide in ash | Nitrogenous matter in extract | Acidity expressed as acetic acid | Starch value KELLNER |
|---|---|---|---|---|---|---|---|---|---|---|---|
| *Lucerne hay:* | | | | | | | | | | | |
| 1) With nitragin mixed with seeds | 89.87 | 10.13 | 2.61 | 22.59 | 3.49 | 21.81 | 0.71 | 2.27 | 40.55 | 2.09 | 51.14 |
| 2) With nitragin mixed with soil | 88.90 | 11.09 | 2.86 | 21.95 | 3.55 | 22.19 | 0.75 | 2.00 | 41.86 | 2.06 | 46.09 |
| Average of inoculated plots | 89.38 | 10.61 | 2.73 | 22.27 | 3.52 | 22.00 | 0.73 | 2.13 | 41.20 | 2.07 | 48.61 |
| Control for plot 1 | 89.08 | 10.92 | 2.59 | 24.11 | 3.30 | 20.63 | 0.72 | 2.14 | 44.08 | 1.98 | 53.20 |
| Control for plot 2 | 88.69 | 11.30 | 2.65 | 22.78 | 2.79 | 17.44 | 0.84 | 1.15 | 45.80 | 2.76 | 51.92 |
| Average of non-inoculated plots | 88.88 | 11.11 | 2.62 | 23.44 | 3.04 | 19.03 | 0.78 | 1.64 | 44.94 | 2.37 | 52.56 |
| *Leaves:* | | | | | | | | | | | |
| 1) With nitragin mixed with seeds | 87.14 | 12.16 | 3.06 | 23.82 | 4.49 | 28.06 | 0.90 | 2.65 | 32.19 | 1.74 | 59.67 |
| 2) With nitragin mixed with soil | 86.92 | 13.10 | 2.93 | 20.92 | 3.76 | 23.50 | 0.85 | 2.49 | 39.54 | 2.06 | 51.85 |
| Average of inoculated plots | 87.03 | 12.63 | 2.99 | 22.37 | 4.12 | 25.75 | 0.87 | 2.57 | 35.86 | 1.90 | 55.76 |
| Control for plot 1 | 85.90 | 14.09 | 3.15 | 18.21 | 3.72 | 23.25 | 0.79 | 2.97 | 41.29 | 1.52 | 50.78 |
| Control for plot 2 | 88.70 | 11.29 | 2.41 | 23.25 | 2.87 | 17.94 | 0.71 | 1.93 | 45.10 | 1.87 | 51.92 |
| Average of non-inoculated plots | 87.30 | 12.69 | 2.78 | 20.73 | 3.29 | 20.59 | 0.75 | 2.45 | 43.19 | 2.69 | 51.35 |
| *Stems:* | | | | | | | | | | | |
| 1) With nitragin mixed with seeds | 93.60 | 6.39 | 1.40 | 44.18 | 1.85 | 11.56 | 0.52 | 1.29 | 36.45 | 1.68 | 50.84 |
| 2) With nitragin mixed with soil | 93.64 | 6.35 | 1.16 | 39.35 | 1.47 | 9.19 | 0.54 | 1.34 | 43.94 | 1.99 | 52.19 |
| Average of inoculated plots | 93.62 | 6.37 | 1.28 | 41.76 | 1.66 | 10.37 | 0.53 | 1.31 | 40.19 | 1.83 | 51.51 |
| Control for plot 1 | 92.57 | 7.20 | 1.29 | 37.93 | 1.74 | 10.88 | 0.55 | 1.25 | 42.66 | 1.09 | 51.82 |
| Control for plot 2 | 93.89 | 6.10 | 1.18 | 36.87 | 1.20 | 7.50 | 0.52 | 1.05 | 48.34 | 1.79 | 52.96 |
| Average of non-inoculated plots | 93.23 | 6.65 | 1.23 | 37.40 | 1.47 | 9.19 | 0.53 | 1.15 | 45.50 | 1.44 | 52.39 |

were sown with Grimm lucerne on May 21st with a Planet drilling machine, in rows 6 inches apart and ½ inch deep; at the rate of 17 ½ lbs. of seed per acre.

*Methods of inoculation.* Two methods were adopted:

1) On one plot the nitragin (17 ½ oz) was mixed with the seed (3 ½ oz) and the mixture was sown in drills. The objection to this method was that the dampness of the nitragin caused the drilling machine to work badly. To mitigate this as far as possible a little dry sand was added to the mixture, with good results. A non-inoculated plot served as a control.

2) The same quantity of nitragin was incorporated with the soil immediately before sowing. The nitragin was scattered by means of a sieve, raked in, and the seed sown directly. Again a non-inoculated plot was used as a control.

*Growth up to time of cutting. Diseases.* Germination began three days after sowing and was finished by the fifth day; this was attributed to the good quality of the seed and to the excellent condition of the soil, which was in good heart. After this, no further growth took place until July 16th, during the whole period of intense cold. Uniform growth followed on all the experimental plots until October 23rd, by which time a difference was evident beteen the inoculated and control plots. The former showed a more tufted growth and a deeper green colour.

During the whole period of vegetative growth the climatic conditions were not very favourable.

At the end of September the presence of a cryptogamic disease (*Pseudopeziza Medicaginis*) was noticed. The inoculated plots showed a resistance to this disease which can only be attributed to the nitragin.

*Chemical analysis. Nutritive value.* — The figures set out in Table I show that the difference in the composition of the crops from the inoculated and non-inoculated plots is not great enough to be established by a single analysis. The only well marked difference is that the crops from the treated plots were larger than those from controls. (Table II).

TABLE II. — *Yields of Lucerne from Inoculated and non-inoculated plots.*

| | First cutting | | | Second cutting | |
|---|---|---|---|---|---|
| | Yield per acre | | Hay in green crop | Yield per acre | |
| | Green crop | Air-dried hay | | Green crop | Air-dried hay |
| | lbs. | lbs. | per cent. | lbs. | lbs. |
| 1) Nitragin mixed with seed . . | 6 821 | 1 902 | 27.88 | 9 856 | 2 742 |
| 2) Nitragin mixed with soil . . | 6 856 | 2 003 | 20.21 | 10 921 | 3 096 |
| Control to 1 . . . . . | 4 083 | 1 193 | 29.22 | 8 721 | 2 345 |
| Control to 2. . . . . | 4 057 | 1 264 | 31.14 | 7 744 | 2 162 |

Although the yield from the inoculated plots was almost double at the first cutting, it remains to be seen whether the difference will reappear in later cuttings.

On the basis of yield in green or dry weight at current prices, inoculation resulted in a financial gain of 27*s* 6*d* per acre, taking the average yield of the first cutting of the two test plots compared with that of the controls. In commercial dealings with forage in Uruguay the price is never based on the feeding value.

*Discussion of results and conclusions.* — The following conclusions are based only on the results of the first cutting, and further data are necessary to confirm them:

1) The influence of nitragin does not manifest itself during the periods of germination and early growth.

2) During the period preceding flowering the effect of nitragin shows itself in increased and more vigorous growth.

3) The yield from inoculated lucerne fields is greater than that from untreated fields.

4) Inoculated lucerne fields offer greater resistance to the attacks of *Pseudopeziza Medicaginis*.

The figures of the second cutting, given in Table II, confirm the foregoing conclusions.

1181 - **The Forage Question in Aragon, Spain.** — LAPAZDRÁN J., in *Ministerio de Fomento, Dirección general de Agricultura, Minas y Montes*, Year X, No. 16, pp. 1-16. Madrid, August 1916.

The objection to lucerne growing arises chiefly from the fact that this crop occupies the land for several years, and the suggestion is made that it should be replaced by clover or, better still, by *Vicia villosa* (winter or spring varieties) or by *V. sativa* (autumn variety). The vetches do not occupy the land for more than 8 or 10 months, so they may be grown as a catch crop on the cereal stubble before the ground is occupied the following season by transplanted mangels or maize grown for grain.

On well worked and manured Aragon soils which are not too damp the yield of vetches is 11 to 12 tons per acre of green forage or 2 ½ to 3 tons of hay per acre.

*Rotations used in the provinces.*

| State Experimental Farm of Saragossa | Non-irrigated new soils |
|---|---|
| 1) Sugar beet | 1) Fallow |
| 2) Wheat or clover | 2) Oats |
| 3) Clover | 3) Vetches |
| 4) Wheat | 4) Wheat |
| 5) Vetches and maize | |
| 6) Wheat or clover | |
| 7) Clover | |
| 8) Wheat | |

*Example of an average farm account for 1 acre of vetches, grown as a first crop on rather gravelly, calcareous clay soil, on the plain of Saragossa.*

EXPENSES.

| | s d | s d |
|---|---|---|
| *Preparation of the soil:* | | |
| 3 pairs of oxen for Jaén plough | 7 8 | |
| 4 " " " " Brabant " | 10 3 | |
| 3 " " " " " " | 7 8 | |
| 1 horse for harrow | 1 7 | |
| 4 days labour for preparing the soil for irrigation | 2 11 | |
| | | 30 1 |
| *Manure.* | | |
| 88 lbs. superphosphate, and cost of transport | 6 6 | |
| 1/2 day for labour for spreading manure | 4 | 6 10 |
| *Irrigation expenses.* | | |
| 2 days labour for irrigations | | 1 5 |
| *Cost of seeding.* | | |
| 112 pints of vetch seed | 14 4 1/2 | |
| 8 pints of oats for mixing in | 2 0 1/2 | |
| 1 day labour for sowing seed | 8 1/2 | |
| 3 pairs animals for covering seed | 5 9 1/2 | 22 11 |
| *Cost of hay making.* | | |
| 9 days labour for cutting | 8 8 | |
| 6 " " " making and loading hay | 3 6 | |
| 1 horse for 1 day to draw hay to barn | 1 7 | |
| | | 13 9 |
| *Rent of land and general expenses* | | |
| Reckoned together as 67*s* 2*d* of which one half is debited to the first crop (vetches) and the other half to the second crop | | 33 7 |
| Total Expenses | | 108 7 |
| RECEIPTS. | | |
| 2 tons 12 1/2 cwt. dry hay | | 137 0 |
| *Net gain per acre* | | 28 5 |

Estimating the value of the land at about £ 11 per acre the return would be about 25 per cent, half being made by the first crop and half by the second, over and above the improvement of the soil by the residues left by the leguminous plants.

1182 – **Experiments with Potash Manures on kops in Germany.** — ANCKER F., in *Wochenschrift für Brauerei*, Year 33, No. 35, pp. 273-275. Berlin, August 26, 1916.

STIMULANT, AROMATIC, NARCOTIC, AND MÉDICINAL PLANTS

The report of the Berlin Experiment Station and School of Brewing is given on experiments made in 1915 to determine the influence of artificial manures on the quality of hops. Each experimental field was divided into 4 plots separated by one or two rows which are not included in the results.

At the beginning of the experiment each plot received the dressing of dung that is usually used in the district, and in addition the following manures were applied per acre.

Plot I. No artificial manure.
Plot II 115 lbs. sulphate of ammonia + 266 lbs. superphosphate.
Plot III 115 lbs. sulphate of ammonia + 266 lbs. superphosphate + 132 lbs. potassium salts (40 per cent).
Plot IV 115 lbs sulphate of ammonia + 266 lbs. superphosphate + 203 lbs. potassium salts (40 per cent).

With 1920 plants to the acre, each plant receives:

Plot II 0.19 oz. nitrogen + 0.40 oz. phosphoric acid.
Plot III 0.19 oz. nitrogen + 0.40 oz. phosphoric acid + 0.44 oz. potassium.
Plot IV 0.19 oz. nitrogen + 0.40 oz. phosphoric acid + 0.68 oz. potassium.

The farm yard manure was applied at the rate of 2 $^1/_4$ to 3 $^1/_4$ lbs per plant, and the artificials were spread from the end of March to mid-April.

The following are the details of the cultivation and the description of the soils used.

Experiment

1 Peaty sand, 10 to 12 inches deep; 240 plants per plot trained up poles.
2 Peaty sand about 1 $^1/_2$ inhes deep over sand; 260 plants per plot, trained up poles.
3 Peaty sand, over sandy subsoil; plants trained up poles.
4 Peaty sand to a depth of 16 inches, then ferruginous sand; 300 plants per plot trained up poles.
5 Peaty sand; 240 plants per plot, three-fourths trained on iron wire, one-fourth trained up poles.
6. Boggy soil; 270 plants per plot, five years old, trained up poles.
7. Peaty sand; plants trained up poles.
8 Peaty sand to a depth of 14 inches, then sand; 160 plants per plot, trained up poles.
9 No data.
10 Peaty sand; plants trained up poles.
11 Peaty sand 12 inches deep, over a sandy subsoil; plants trained up poles.
12 Peaty sand to a depth of 14 inches; subsoil sandy; 300 plants per plot trained on iron wire.

The *yield of dry hops* per 100 plants on the various plots was as follows:

| Experiment | Plot I | Plot II | Plot III | Plot IV |
|---|---|---|---|---|
| | lbs. | lbs. | lbs. | lbs. |
| 1 | 29.92 | 27.50 | 33.00 | 35.20 |
| 2 | 29.70 | 31.90 | 36.30 | 40.48 |
| 3 | 19.80 | 20.46 | 21.12 | 22.00 |
| 4 | 22.00 | 25.52 | 27.06 | 23.32 |
| 5 | 20.24 | 23.76 | 26.40 | 30.14 |
| 6 | 35.42 | 38.72 | 36.52 | 38.72 |
| 7 | 22.44 | 32.12 | 33.00 | 36.52 |
| 8 | 13.86 | 14.52 | 15.18 | 15.40 |
| 9 | 5.06 | 4.62 | 4.40 | 4.18 |
| 10 | 9.02 | 10.78 | 11.44 | 12.98 |
| 11 | 3.52 | 3.96 | 7.04 | 9.02 |
| 12 | 25.52 | 27.72 | 29.26 | 29.26 |

It appears from these results that artificial manure considerably increased the yield in nearly every case without causing any depreciation of quality.

The average amounts of bitter substances in the dry matter are:

| Plot | per cent |
|---|---|
| I | 17.24 |
| II | 17.35 |
| III | 17.28 |
| IV | 17.05 |

Thus no average increase in bitter substances is evident.

If, however, the individual experiments are considered it is found that the plots come in the order III, II, IV, I with regard to the *amount of bitter substances* they contain. In *type and size of the strobiles* the order is plot III, IV, II, I; in *lupulin content*, plot IV, III, I, II; in *colour of the hops* plot II, I, III, IV.

To sum up, from the point of view of quality plot III has given the best result seven times and plot IV five times, the other two plots never taking the first place. The conclusion may be drawn that the quality has been most improved on plot III. It is closely followed by plot IV, which comes second simply because the foliage of the plants was more luxuriant than on plot III.

1183 – **Preliminary Work at the Chemical Laboratory of the Soukhoum Experiment Station, Caucasus, on the Extraction of Medical Substances from Local Plants (Eucalyptus, Wild Mint, Camphor, Castor Oil, etc.).** — Козловъ М. Н. (Kozlov M. N.), *Черноморское Сельское Хозяйство* (The Agriculture of the Coast of the Black Sea), Year XIII, No. 1, 2, pp. 20-39. Soukhum, Jan.-Feb. 1916.

Numerous observations made by the Acclimatization Section of the Soukhoum Station have shown that it is quite practicable to cultivate species of Eucalyptus, rich in essential oils, on the Batum coast. The first attempt to extract these oils was successfully made in 1899-1900 by Beklemichev at his essential oil factory, but after his death the work was not carried on.

In order to throw further light on this question, investigations have been made on the leaves and stems of the following species: *Eucalyptus Globulus, E. Maideni, E. amygdalina, E. viminalis, E. pulverulenta, E. crebra* and others.

The quantity of essential oil in the eucalyptus is greatest in the spring and early summer. Beklemichev's researches showed that in September 0.8 per cent of oil was extracted from *E. Globulus*, 0.7 per cent in December, and 0.9 per cent in March. Tests made in September with *E. viminalis* gave 0.6 per cent. instead of 0.7 per cent; similar results were obtained with *E. pulverulenta*, which yield 1.8 per cent instead of 2.2 per cent. Fresh

leaves of *E. Globulus* yielded 1.1 per cent of oil, dried leaves gave 2 per cent ;in *E. vininalis* the figures were 0.6 per cent 1.24 per cent respectively. The drying of the leaves also resulted in smaller quantities of condensation water, so that the expense of fuel for distillation was less. On the other hand, dessication did not cause any loss of essential oil.

From the chemical standpoint *E. Globulus, E. Maideni* and *E. pulverulenta* may be classed together, as they yield very similar oils, containing over 40 per cent eucalyptol. It has been proved that these three species will grow well on the coast of Batum and that they can be cultivated on a large scale. The total leafage of *E. Maideni* is heavier than that of *E. Globulus*. This fact, together with the higher oil yield of the former species, must have some effect on the return from its cultivation. It has also been proved that the eucalyptus oil obtained from the Batum coast is not inferior in quality to that derived from other countries ; on the contrary, for *E. Globulus* and *E. Maideni* the quality is superior.

The probable expenses and receipts of the production and commercial extraction of essential oils may be summarised thus : capital for laying out plantations £ 19 per acre ; annual expenditure about £ 8 per acre ; a return of £ 19 4s to £ 22 8s per acre may be expected, representing interest at the rate of 13 to 30 per cent on a capital of £ 2600 to £ 3200, laid out on 25 to 50 acres of land and on the building of the factory.

Other interesting investigations have been made on wild mint (*Mentha Pulegium*) and Castor oil. The results are quite satisfactory ; the yield of essential oil from fresh mint was 0.4 per cent, and after drying in the air 1.09 per cent ; in castor oil seeds the proportion of oil reached 49.5 per cent.

By using the fresh leaves of a tree of *Cinnamomum Camphora* Nees. (about 20 years old), 0.9 per cent of raw camphor was obtained ; 22.6 per cent of the total quantity consisted of oil of camphor, the remaining 77.4 per cent being camphor. Experiments with large branches 1 ½ to 2 inches in diameter, gave negative results; no separation of solid camphor took place, but a small quantity (0.09 per cent) was obtained of an oleaginous substance with a peculiar smell which recalled that of camphor. (1),

---

(1) According to Prof. GIGLIOLI the distribution of camphor in the different parts of *Cinnamomum Camphora* growing in Italy is as follows:

| Number of analyses | | Proportion of camphor per cent |
|---|---|---|
| 97 | In fully developed green leaves | 1.20 |
| - | In young leaves | 0.70 |
| 6 | In dried leaves | 2.18 |
| 14 | In young wood | 0.10 |

" It thus appears that only the foliage of the camphor tree should be used, the oldest leaves being taken by preference and dried. This applies at any rate, to those trees which are similar in species to those that are becoming less and less frequent in the forest of Japan and Formosa ". (*Ed.*).

1184 – **Cultivation and Marketing of Flowers and Early Produce on the Riviera from Toulon to Mentone.** — FONCIN M., in *Annales de Géographie*, Year XXV, No. 136, pp. 241-262. Paris, July 15, 1916.

The cultivation of flowers and early produce occupies the whole coast from Marseilles to Mentone, a zone which comprises a purely agricultural region. The land is undulating and the soil is very variable, including the alluvium on the plain of Hyères, the gneiss and mica-schists of Maures, the recent eruptive rocks of Esterel and finally the calcareous or marly sedimentary beds. It is because of the climate — a Mediterranean climate tempered with mild winters and dry summers — that the whole region is given over to agricultural pursuits. All the rain falls in the autumn and winter, and then it comes in heavy downpours. Sowing must be done after the rains to ensure a harvest before the end of spring, as only wheat, vines and fruit trees can stand the dryness of the summer. Attempts have been made to anticipate the rainy season by means of summer irrigations, carried out by utilising the subterranean waters or by diverting the water courses. All the seeds sown are obtained from cold countries, as they start into growth so much more quickly than those raised locally.

In the Maures there is a fairly brisk trade in wild flowers. Among cultivated plants the orange (harvested in May) and mimosa are prominent. Roses are grown in the open air and in glasshouses, carnations under matting (Hyères, Maures) or under handlights (shores of the Maritime Alps, especially at Antibes), violets as undergrowth in fields planted with olives or peaches. Ornamental plants are also grown. Kitchen gardens are almost entirely confined to the plain of Hyères. In fruit growing the cultivation of citrus fruits is is not very important ; peaches, cherries and figs are the trees which succeed best ; the grape is also a very important product.

In some cases the land is leased without payment in return for the clearing of some of the waste land. Some landlords insist on the growing of the old crops (vines, olives, wheat) as well as fruit and early produce. Under these circumstances the family of the tenant provides sufficient labour for the work. In other cases only flowers or early crops are grown, when labourers are necessary ; the land is taken on lease, usually for long periods. Finally there are big horticultural establishments devoted to glasshouse work only, which specialise in the cultivation of one or two plants (roses, carnations). The aim of each firm is to create a new variety but unfortunately there is no law of agricultural property to safeguard the rights of the creator of a new variety. In these great establishments the amount of labour employed is considerable. The figures referring to one such firm are as follows :

| | |
|---|---|
| Area of land cultivated | 37 ½ acres. |
| 80 carnation houses covering | 200 000 sq. ft |
| 60 rose houses covering | 60 000 sq. ft. |
| Frames | 14 000 |
| Output, per annum | 18 000 baskets |
| Working expenses | £4 000 |

| | |
|---|---|
| Cost of straw | £48 |
| Cost of string | £48 |
| Upkeep of frames | £68 |
| Plumbing etc. | £120 |
| Labour | £2 400 |

The flowers are sent away by parcels post, in reed packages lined with paper or wadding to keep out the cold. The very delicate fruits buried in wood packing, travel in boxes, while the more hardy vegetables content themselves with baskets and even sacks. Only the very earliest spring crops, fruits or vegetables, benefit by more dainty packing in little boxes or quite small flats, which are forwarded by parcels post. The journey is very rapid, the goods reach Paris in 20 $^1/_2$ hours, Frankfort on-Main in 33 hours, London in 38 ½ hours, Brussels in 39 hours, Pétrograd in 87 hours and Moscow in 95 hours.

From the agricultural point of view, flowers and early produce have taken the place of wheat, which used to be grown in the rows between the vines. The olive trees have begun to be neglected; only the vine holds its own. The change of crops has had a great influence on the life of the region and has modified the distribution of the population, hitherto crowded together in the villages and old towns; today these old villages are replaced by scattered dwellings in proximity to the gardens and the transport centres. The influence of the new method has also made itself felt by developing relations with other countries and by giving an impulse to cooperation.

The growing of flowers and early crops has greatly increased the wealth of the country, the value of the products sold each year reaching £ 2 200 000; it has also resulted in the creation or development of such industries as perfumery, distilling, confectionery and the manufacture of packing materials. Finally it has exercised an ethnographical influence by encouraging the immigration of foreign labourers who frequently settle down to live in the country.

FRUIT GROWING

1185 – **Mountain fruit Growing in Switzerland: Varieties Introduced from Russia, Sweden and Denmark.** — See No. 1158 of this *Bulletin*.

1186 – **Banana Growing in New South Wales.** — *The Fruit World of Australasia*, Vol. XVII. No. 8, p. 270. Melbourne, August 1, 1916.

The cultivation of the banana is extending rapidly in the districts of Tweed and Brunswick River. Orchards of commercial importance planted with the variety Cavendish, which is much superior to the ordinary banana in quality and aroma, occur chiefly at Terranora, Piccabeen, Bilambil and Cobaki. 300 to 400 plants are grown per acre, and the plantations are usually from 10 to 25 acres in extent, but some are much larger. The first crop of 1 cluster of bananas per plant is gathered from 16 to 24 months after planting; the following year the crop increases to 4 or 5 clusters per plant. In 1915, at Bilambil, the crop from one plantation was valued at £ 2320, a gross return of £ 232 per acre.

The cost of planting one acre with 400 banana trees varies from £ 10 to £ 14 10*s*. according to the price of the plants, which ranges from £ 1 12*s* to £ 2 8*s* per hundred. Land suitable for banana growing costs from £ 29 to £ 54 per acre, and plantations in full bearing are valued at about £ 96 per acre.

1187 – **Effect of Drought on the Size of Grapes.** — RAVAZ L., in *Le Progrès Agricole et Viticole*, Year 33, No. 35, pp. 190. Montpellier, August 27, 1916. VINE GROWING

During the prolonged drought of the summer of 1916 in the South of France some measurements were made of the sizes of grapes.

*Diameter of Aramon Grapes.*

| Number in order on the bunch | Normal vine | Vine suffering from drought |
|---|---|---|
| — | mm | mm |
| No. 1 | 22.5 | 18.5 |
| No. 2 | 23.0 | 16.2 |
| No. 3 | 22.7 | 17.4 |
| No. 4 | 23.4 | 16.5 |
| No. 5 | 22.5 | 18.3 |
| No. 6 | 23.3 | 16.4 |
| Average | 23.2 | 17.2 |

Being given that volumes are to one another as the radii raised to the third power the ratio 1549.29 : 636.05 is obtained ; in other words, the berries which have suffered from drought are nearly three times as small as normal grapes.

1188 – **Spanish Forests and Paper Manufacture.** — ELORRIETA O. in *Resumen de Agricultura*, Year XXVIII, Part 9, pp. 399-402. Barcelona, September 1916. FORESTRY

The Spanish market uses annually 28 000 tons of paper, of which newspapers account for one half. Spain produces 15 000 tons of mechanical pulp per annum, from which an approximately equal weight of paper is manufactured. Consequently she is obliged to import 3 000 to 4 000 tons of mechanical pulp and 10 000 tons of chemical pulp.

*Trackless forests.* — It is asserted that there is sufficient wood in Spain to cover the amount of the imports and that it is the lack of roads which hinders the working of the woods under economic conditions. In Spain the raw material for paper making is not very costly, but no-one cares about it and the forests remain practically unused. As an instance may be cited the magnificent fir woods of the Aran valley consisting of *Abies pectinata*, the species best adapted to paper making. A beginning was made in the management of 37 500 acres, and the yield from these forests reached nearly 16 000 cubic yards. Unfortunately the work was stopped on account of administrative difficulties connected with boundaries and other questions of secondary importance.

*Workable woods.* — In the Pyrenees of Aragon and Catalonia, chiefly in the provinces of Huesca and Lerida, there are 122 500 acres of firwoods capable of providing 39 000 cubic yards of wood per annum. As the wood

has a high moisture content this quantity would make about 15 000 tons of mechanical pulp or 10 000 of chemical pulp, which is nearly enough to tide over the crisis that the war has caused in the paper trade. It does not seem possible to work these 122 500 acres in an intensive manner all at once, and it is suggested that the working of the Aran valley, mentioned above should be continued; the 39 000 cubic yards of wood obtained would be equivalent to 6 000 tons of mechanical pulp or 4 000 tons of chemical pulp.

The remainder could be provided by the pine forests (*Pinus sylvestris*) of Soria, Burgos, Sierra Carpetana and Cuenca. The Spanish pine wood contains more resin than that from the Baltic and Sweden and consequently is less suitable for paper manufacture. Nevertheless this species occurs at various altitudes, and it is probable that *Pinus sylvestris* from the dense woods of the higher parts of the country closely resembles that from Northern Europe.

The conclusion is drawn that the problem of providing raw material for paper making could be solved if the Forest Administration were to take the matter up seriously.

*Transport.* — This is a more difficult problem to solve than the preceding one. In practice the freight from Sweden to Spain, to Pasajes (Guipuzcoa province) is lower than the cost of transport from Sierra Guadarama (province of Madrid and Ségovia) to Guipzcoa or Biscay, where important Spanish paper factories are situated. The Government may prevail upon the railway companies to concede a lower tariff, but it cannot improvise means of road transport.

The Spanish paper industry has a producing capacity great enough to meet the needs of the country : the Spanish Papermaking Company is responsible for 68 per cent of the total output. Apparently means are available to produce the whole of the mechanical pulp necessary, but not the chemical pulp, because the manufacturers are not provided with the needful plant. The paper factory at Villalba (Navarra) is an exception to this, as it produces a small quantity of semi-chemical pulp.

Replanting with poplars, especially Canada poplar, is suggested as a means of providing the most rapid solution of the problem, while at the same time it would give a return of 12 to 14 per cent on the capital outlay.

## LIVE STOCK AND BREEDING

FEEDS AND FEEDING

1189 – **Influence of Feeding with Milk rich in Carbohydrates (Diafarinised) and Milk rich in Fat (Emulsion Milk) of Varying Protein Content, on the Composition of Young Pigs** (1). — WELLMANN, O. (Zootechnical Institute of the Royal Veterinary School of Budapest) in *Kiserletügyi Kozlemenyek* (Communications of the Agricultural Stations of Hungary) Vol. XIX, Part 1, pp. 84-164, 35 tables (German summary pp. 165-167). Budapest, January to June 1916.

In these experiments young male pigs of the Berkshire breed were fed from the 23rd to the 39th day on a ration composed partly of diafari-

(1) See *R.* January 1916, No. 89.

nised milk (skim milk to which flour-starch saccharified by a preparation of diastase has been added) and partly of emulsion milk (skim milk emulsified with a cheap substitute for milk fat). These rations had the nutritive rations: narrow (1 : 2.5); fairly narrow (1 :4.5); fairly wide (1 :5.8) and wide (1 : 7.8). Twelve pigs were employed bred in the pigstys of Kisber (Hungary) of ages ranging from 4 to 12 weeks and weighing from 11 to 40 lbs. They were divided into groups of three proceeding from the same litter, two of each group being submitted to experiment, the third acting as control. The latter was slaughtered at the beginning of the experiment in order to determine the composition of those parts of the subjects experimented on, which were concerned in the increase of weight.

The organs of the slaughtered animals were divided into 10 to 12 groups, the whole organ being studied except in the case of the muscles, bones, skin and connective and fatty tissues, for which only half the animal was taken. The dry matter, fat, ash, nitrogen, glycogen and calorific value were determined. The results obtained were as follows.

1) The pigs fed on milk having a narrow nutritive ratio put on more flesh but less fat than did those fed on a ration poorer in protein. The bones of the young animals were relatively heavier than those of the older subjects which had been subjected to intensive feeding.

2) Analysis proved that the nitrogen (*i. e.* the dry matter less the fat and ash) is the most constant constituent of the young pig's organism, whilst the fat and ash are the most variable. Age influences the composition, in the sense that the older animals contain less water and more fat and have a higher calorific value than the younger animals.

The nature of the feeding had a marked effect on the composition of young pigs. Thus, compared with milk rich in carbonhydrates, milk, rich in fat increased the content of dry matter, dry matter less fat, dry matter less fat and ash, ash, nitrogen and the calorific value. *Per contra*, it diminished the proportion of water and depressed the ratio of the aforesaid constituents and water.

The composition of young pigs was greatly influenced by the nutritive ratio of their food. The ration having a wide nutritive ratio increased the proportion of dry matter and of fat, and the calorific value.

3) The best criterion of the influence of feeding was afforded by the composition of and increase of live weight during the experiment.

4) The distribution of the nutritive elements and the calorific value in the different parts of the organism was as follows:

With the oldest animals, the connective and fatty tissues as well as the muscles contained the greater part of the total dry matter; the other organs the lesser part.

When the milk ration had a wide nutritive ratio the dry matter of the connective tissue was increased at the expense of the muscles.

The effect of food rich in fat was to favour the fixation of dry matter in the bones and muscles when compared with food rich in carbohydrates.

The greater part of the water (about half the total) was found in the

muscles. The brain, bones and muscles of the older animals contained less water than did those of the younger subjects.

Comparing the behavious of milk rich in carbohydrates with that of milk rich in fat, the latter diminished the fixation of water in the connective tissue and increased it in the muscles.

The total ash was distributed as follows: the bones contained 65 to 76 per cent. and the muscles about 15 per cent. In comparison with those of young pigs fed on emulsion milk, the bones of animals fed on diafarinised milk contained the least quantity and the muscles the highest quantity of ash.

The muscles contained the greater part (about half the total) of the nitrogen found in the body of the young pig. The fatty and connective tissues contained 36 to 60 per cent. of the chemical energy, the muscles 28 to 41 per cent. and the bones 6 to 10 per cent. Milk having a wide nutritive ratio increased the energy reserve of the connective and fatty tissues to a marked degree.

5) Analysis of the different organs gave the following results.

The blood of the animals experimented with, particularly of those fed with emulsion milk, contained less dry matter than did the blood of the control animals.

The lungs, heart, glands, bones, skin, connective and fatty tissues, muscles and intestines of the older animals contained more dry matter, fat and energy than did the same organs of the younger subjects. Compared with milk rich in carbohydrates milk rich in fat increased the dry matter, the dry matter less fat, the ash, the nitrogen and the calorific value. Milk having a wide nutritive ratio increased the dry matter, the fat, and the calorific value.

The nature of the feeding had a considerable influence on the composition of the bones. Milk rich in fat, as compared with milk rich in carbohydrates, increased the ash content to a very marked extent.

6) The dry matter of the liver contained 0.16 to 0.74 per cent. of glycogen; that of the muscles 0.4 to 11.6 per cent. from which it is calculated that the liver of the young pig contains 0.53 to 8.72 grms, the muscles 0.71 to 5.91 grms of glycogen.

The writer has estimated the glycogen in the fresh liver and muscles of two young pigs, each weighing 11 lbs. The animal fed on diafarinised milk contained 34.2 grms, that fed on emulsion milk 13.9 grms, the liver and muscles of the first thus containing 2 ½ times as much glycogen as did those of the second. Hence the greater part of the glycogen is probably decomposed during drying.

7) The proportion of fat and carbohydrates in the food are held to be of equal interest to the physiologist and to the practical feeder. It is found that, as compared with food rich in fat, food rich in carbohydrates stimulates an increase of the water content of the organism and has an unfavourable influence on the fixation of dry matter less fat and ash.

The mean results obtained when using two young pigs from the same litter, fed side by side, one on diafarinised milk the other on emulsion milk

having the same nutritive ratio, showed that the animals responded differrently. For an increase in weight of 22 lbs, the animal fed with emulsion milk produced 4.2 lbs of dry matter less fat and 13.8 lbs. of water, whilst that fed with diafarinised milk fixed 17.24 lbs. of water in the organism for the same quantity of dry matter less fat, the excess of water in the latter animal being 3.46 lbs. or 25 per cent. Of this excess 0.94 lbs. belonged to the skin and connective and fatty tissues : 1.1 lbs. to the muscles ; 0.60 lbs. to the bones ; 0.81 lbs. to the other organs ; *i. e.* the water content of the connective tissue increased 45 per cent ; of the bones 35 per cent ;. of the muscles 16 per cent. ; and of the other organs 23 per cent.

The origin of this excess of water must be attributed more especially to the glycogen, for, during the metabolism of the fat the water derived from the glycogen probably remains in the tissues.

1190 – **Influence of Feeding Pigs with Spoiled Maize upon the Composition of the Fat.** — See this *Bulletin* No. 1221.

1191 – **Investigations on the Poisoning of Poultry by Corn Cockle (*Agrostemma Githago*) in Hungary.** — DEGEN, A. (Royal Hungarian Seed Testing Station Budapest), in *Kiserletügyi Kozlemenyeh* (Bulletin of the Hungarian Agricultural Station) Vol. XIX, Part I, pp. 11-21. Budapest January-June 1916.

As great difference of opinion exists among writers (LEPMAN, BOHMER, POTT, HONCAMP, NEUMANN, MULLER, KLING, ROBERT, TORMAY, HAGEMANN, HANSEN, MEISSL, etc) as to the toxicity of the siftings of certain cereals, particularly corn cockle (*Agrostemma Githago* the writer (director of the Royal Hungarian Seed Testing Station) has made a fresh experimental study of the question in the following way. 1) All cases of illness and death of animals fed with food containing siftings of grain were examined minutely ; 2) the services of an expert were engaged ; 3) feeding trials were made with the supposed toxic substance in conjunction with the Animal Biology and Nutrition Station ; 4) Help was sought from the Veterinary High School.

In June 1915, 280 geese perished at Pestszentlorie, through the consumption of a meal, purchased by the breeder as meal No. 8 but really originating from a sifting containing 40 to 50 per cent of the seeds of *Agrostemma Githago*. With the same meal the Animal Biology and Nutrition Station undertook feeding trials on three fowls and three geese. During a preliminary period of six days the six animals were fed with maize grain. After this preparatory period one fowl and one goose received at 7.0 a. m. respectively 50 and 100 grms of the meal in question At about 10 a. m. the two animals exhibited symptoms of poisoning, and died at about noon. The two other fowls received the same meal gradually thus : 1st day : *a*) 80 grms of maize + 20 grms of meal containing corn cockle ; 2nd day : *b*) 60 grms of maize, 40 grms of the meal ; 3rd day : *c*) 20 grms of maize, 80 grms of the meal. One of the fowls died after having taken ration *b*), the other after ration *c*). One of the geese succumbed after a ration of 120 grms of maize, 80 grms of the same meal, whilst the other resisted the meal better because it had rejected the greater part of the ration on three successive

days. In order to prevent vomiting the quantity of water was diminished. From the fourth day the goose received only a ration of 100 grms of the meal and it died on the 6th day. The autopsy of the dead animals performed by the Pathological Department of the Veterinary High School diagnosed for the three geese : inflamation of the aesophagus : serous circumoesophageal inflammation : inflammation of the small intestine : hemorrhage of the visceral membrane of the pericardium. An hemorrhagic inflammation of the stomach was also observed in the three geese, caused by numerous *Strongylus nodularis*, which developed independently of the absorption of the toxic substance. Of the three fowls two suffered from an acute inflammtion of the small intestine and hemorrhage of the pericardium, the third from an acute inflammation of the crop, oesophagus and gizzard.

The following conclusions are drawn.

1) The observed cases establish the fact that *Agrostemma Githago* has the property of producing in poultry grave symptoms of poisoning.

2) As the meal employed in the experiments contained only 40 to 50 per cent of the grlst of corn cockle seeds, it follows that substitution of one fifth of the daily ration by this grist will cause death.

3) Since the pathological symptoms mentioned above resemble very closely those of acute mineral poisoning, great caution must be employed in judging analogous cases, particularly as siftings of grain containing more or less corn cockle seed constitute a food widely distributed in Hungary.

4) Since the siftings contain widely varying amounts of corncockle seed (from 8 to 38 per cent in the mills of Budapest) the percentage of corncockle seed admissible in the daily ration must be known in order to avoid poisoning.

5) It is convenient to base the daily ration on the maximum content (about 40 per cent) of corncockle seed in the residues from the milling. Nevertheless it is advisable to submit a sample of the product to an Agricultural Station for examination and expert advice.

HORSES

1192 – **Experiments on the Feeding of Draught Horses made in Sweden from 1908 to 1915.** — HANSEN, N. (Director of the Domestic Animal Department of the Central Agricultural Station of Stockholm) in *Fühlings landwirtschaftliche Zeitung*, 65th year, No. 13-14, pp. 289-315. Stuttgart, July 1-15, 1916.

In the years 1908-1915 the Swedish Central Agricultural Experiment Station has made repeated experiments to ascertain the value and practical utility of different foods for draught horses. Some of these experiments have already been described by the writer in a preceding publication. The present experiments 40 in number, divided into 12 series, and made with 372 horses, deal with the following foods : barley, oats, a mixture of oats and barley, maize, potatoe flakes, wheat bran, oat bran, a mixed food (oat bran and rice meal), mangels, carrots and cooked potatoes.

In choosing the animals amongst ordinary draught horses on different farms, care was taken that the horses of the same team were as far as possible of the same age, temperament, and strength and had the same height to the withers. Except one team, all the off-side horses formed one

experimental group, and all the near-side horses another group. In the experiments exact weights of food were distributed to the different groups.

In some series a preliminary experiment was made to ascertain whether the groups were equivalent, but this was unnecessry in most cases, the equivalence of the groups being known beforehand.

The work done by a horse cannot be exactly determined either in agricultural practice or in practical feeding experiments but it can be assumed to be proportional to the nutritive value of the food administered, which is indicated by the change in the live weight of the animals. Consequently the experimental results should be determined from the variations of the live weight of the horses. In order to obtain satisfactory results by means of weighings, all these should be made at the same time of day.

In some experiments the weighing was made regularly at midday, after feeding and before yoking, in others after the return at midday but before feeding. Sufficiently exact results were thus obtained.

The ration was fixed according to the work to be done, in such a manner as to prevent an emaciation of the animals in a period of heavy work, and an increase of weight in a period of light work.

The following results were given by the different foods.

I. *Barley and oats.* — In some previous experiments with cows the writer using KELLNER's starch value, has estimated the forage value of 100 kgs. of barley at 100 forage units and that of 100 kgs of oats at 84 units. Thus 1 kg. of barley corresponds with about 1.2 kgs of oats.

The present experiments (November 1909 to December 1913) were intended to determine whether this ratio is also true for horses. Barley and oats, of a quality a little inferior to the average were given in a ration of 1 : 1.2. The daily ration contained on an average 4 kgs. (8.8 lbs.). of barley and 5 kgs. (11 lbs.) of oats. There were five experiments lasting from 49 to 77 days, and there were 3 to 8 animals in each group.

The results show that 1 kg. of barley can easily replace 1.2 kg. of oats in the feeding of draught horses. Barley did not prove an unsuitable food for horses, neither did it diminish their working power.

II. *Oats and wheat bran.* — Experiments have shown (in accordance with KELLNER's observations) that wheat bran is of little value for fattening pigs but an excellent food for milk production.

The writer's experiments were made to determine whether bran had the same effect on horses as on cows, or as on pigs. For this purpose it was considered opportune to compare it with oats. On an average 2.56 kgs. (5.6 lbs.) of oats or 2.78 kgs. (6.1 lbs.) of bran were given. The oats ration contained 2.15 and the bran ration 2.21 forage units. Six experiments were made lasting 28 to 69 days, and there were three to eight animals in each group.

The wheat bran, which is richer in forage units, also produced a rather greater increase in the live weight of the animals, from which the conclusion is drawn that the action of bran on horses is similar to that on cows.

III. *Oats and maize.* — The forage values of oats and maize were to be compared, and for this purpose they were employed in the ratio of

1.2 : 1.0. The oats were of excellent quality, but the maize scarcely up to the average. 3.67 forage units of maize were replaced by 3.75 units of oats. The maize ration contained on an average 3.6 kgs. (7.9 lbs.) and the oats ration 4.3 kgs. (9.5 lbs.) per head per day. There were six horses and two experiments lasting 49 to 77 days.

From the results it is concluded that if the maize ration does not exceed 50 per cent of the total ration of concentrated food, and if the maize is finely ground before being given to the horses its forage value is 20 per cent higher than that of oats. Thus oats can be replaced by maize in the proportion of 1.2 : 1.0.

IV. *Oat bran and a mixture of oats and barley.* — From the oat mills of Sweden a bran is obtained which before the War was largely exported. Export now being forbidden, this has to be utilised in the country, and it is of interest to learn its forage value. Previous experiments made with cows proved that 1 kg. of oats bran is equivalent to 1 forage unit.

The writer's experiments were intended to determined whether this bran is as valuable for horses as for cows. A mixture of barley and oats was employed as a standard of comparison. The four experiments lasted 55 to 90 days each and were made on 17 horses each receiving up to 3 kg. (6.6 lbs.) of oat bran per day. The experiments showed that when 1 kg. (2.2 lbs.) of the mixture was replaced by 1.42 kgs. (3.1 lbs.) of bran, the latter did not give the expected result, but if the ratio was smaller a better result was obtained. For the group fed with oat bran a better mean experimental result was obtained than for the group fed with the mixture, and it may be concluded that in practice 1.8 kg. (4 lbs.) of oat bran is equivalent to 1 forage unit. Oat bran is not a better food for horses than for cows Not more than 4 kgs. (8.8 lbs.) per head per day should be given.

V. *Mixture of barley and oats, and the mixed food " Gota ".* — The low, forage value of oat bran together with its high content of raw cellulose have induced the manufacturers to improve its quality by the addition of rice meal. This mixed food (60 per cent oat bran and 40 per cent rice meal) This is sold in Sweden under the name of " Gota ". Feeding experiments made with cows and pigs have shown that 1.5 kgs. (3.3 lbs.) of Gota is almost equivalent to 1 kg. (2.2 lbs.) of barley or 1.1 kgs. (2.4 lbs.) of the mixture of oats and barley.

In the experiments with horses 1.5 kgs. (3.3 lbs.) of Gota were replaced by 1.1 kgs. (2.4 lbs.) of the mixture of barley and oats. Two experiments were made lasting from 82 to 84 days ; eight horses were employed to which a ration of 3.85 kgs. (8.5 lbs.) of Gota was given per head per day.

Somewhat the better results were obtained with the group which had been fed with Gota, but in general the two forages can be described as equivalent. According to the writer, Gota is an excellent food for horses, but it must be of good quality and must not contain more than 16 per cent of raw cellulose.

VI. *Barley and potato flakes.* — The experiment was made to determine the forage value of these two materials for horses. Two kgs. (4.4 lbs.) of barley were first replaced with 2 kgs. (4.4 lbs.) of flakes, then with 2.5 kgs.

(5.5 lbs.). Two experiments were made lasting 78 and 43 days, and the total number of horses employed was nine.

The final result was in favour of the potato flakes, and it is concluded that for feeding horses 1 kg. (2.2 lbs.) of flakes containing 980 grms. (1.9 lbs.) of dry matter will easily replace 1 kg. of ordinary barley.

VII. *Barley and cooked potatoes.* — The writer has shown experimentally that in the fattening of pigs 1 kg. (2.2 lbs) of ordinary barley can be replaced by 0.9 kg. (2 lbs.) of the dry matter of cooked potatoes.

In the experiment with horses the two forages were given in the above proportion. The potatoes were cooked every three days and at least four rations of them were given daily. Except in one case all the eight horses ate these rations willingly. Two experiments were made lasting 71 to 80 days, and the daily ration contained 2 to 3 kgs. (4.4 to 6.6 lbs.) of dry matter.

The two groups gave the same result. Accordingly the conclusion is drawn that in the feeding of horses a ration of 900 grms. (2 lbs.) of the dry matter of potatoes has the same forage value as 1 kg. (2.2 lb.) of barley.

VIII. *Mixture of oats and barley and mangels.* — This mixture was replaced partly by mangels and partly by carrots in the proportion 1 kg. Mixture : 1 kg dry matter of the roots 8 to 20 kgs. (17.6 to 44 lbs.) of roots were fed per head per day. Four experiments were made with 17 horses, lasting 50 to 89 days.

The experiments proved that well cleaned roots can be given at the rate of 20 kgs (44 lbs) per head per day without injury to the horses. 1 kg (2.2 lbs.) of the dry matter of the roots has the same nutritive value as 1 kg. (2.2 lbs.) of the mixture.

The experiments were intended also to discover the quantity of food required by horses. The quantity of forage administered was determined daily, and then from measurements of the live weight of the horse, it was determined whether the ration was suitable for the work to be done. The nutritive value of the different rations was expressed in forage units. In addition the content of digestible protein in each ration was determined.

The results show that the number of forage units and the necessary quantity of digestible protein vary according to the work done by the horses. All the experiments have proved however that the ration is completely utilised if it contains 75 to 80 grms of digestible protein per forage unit. This, the writer terms " the minimum requirement " of digestible protein

Based on these observations the following relative figures have been established for horses weighing about 600 kgs. (12 cwt.).

| Kind of work done by the horses. | Number of forage units required | Quantity of digestible protein required |
|---|---|---|
| Light . . . . . | 7 to 8 | 500 to 600 gms. |
| Medium . . . . . | 8 to 10 | 600 to 800 gms. |
| Heavy . . . . . | 10 to 12 | 800 to 1000 gms. |
| Very heavy , . . . . . | more than 12 | more than 1000 gms. |

CATTLE

1193 – **Score for Holstein-Friesian Bulls and Cows Adopted by the Holstein-Friesian Association of America.** — BENNET, E. G., in *Missouri State, Board of Agriculture, Monthly Bulletin*, Vol. XIII, No. 11, pp. 57-61, Columbia Mo. November 1915.

The Holstein-Friesian Association of America (1) has adopted the following scale of points for the score of Holstein-Friesian Bulls and cows:

## SCORE FOR HOLSTEIN-FRIESIAN BULL,

(The text under each heading relates entirely to the method of application agreed upon by the Inspectors in order to secure uniformity of work. The abbreviations are as follows vs, very slight ; s, slight ; m, marked ; vm, very marked ; e, extreme).

| | Contents |
|---|---|
| HEAD. — Showing full vigor ; elegant in contour . . . . . | 2 |
| *Discredit*: *vs* 1/8 — *s* 1/4 — *m* 1/2, — *vs* 3/4 — *e* 1. | |
| FOREHEAD. — Broad between the eyes ; dishing . . . . . | 2 |
| *Discredit* : *vs* 1/8 — *s* 1/4 — *m* 1/2 — *vm* 3/4 — *e* 1. | |
| FACE. — Of medium length ; clean and trim, especially under the eyes ; the bridge of the nose straight . . . . . | 2 |
| *Discredit* : *s* 1/8 — *m* 1/4 — *e* 1/2. | |
| MUZZLE. — Broad with strong lips . . . . . | 1 |
| *Discredit*: *s* 1/8 — *m* 1/4 — *e* 1/2. | |
| EARS. — Of medium size ; of fine texture ; the hair plentiful and soft ; the secretions oily and abundant. . . . . | 1 |
| *Discredit* : *m* 1/8 — *e* 1/4. | |
| EYES. — Large ; full ; mild ; bright . . . . . | 2 |
| *Discredit* : *s* 1/8 — *m* 1/4 — *e* 1/2. | |
| HORNS. — Short ; of medium size at base ; gradually diminishing towards tips, oval ; inclining forward ; moderately curved inward ; of fine texture ; in appearance waxy . . . . . | 1 |
| *Discredit* : *m* 1/8 — *e* 1/4. | |
| NECK. — Long ; finely crested (if the animal is mature) ; fine and clean at juncture with the head ; nearly free from dewlap ; strongly and smoothly joined to shoulders . . . . . | 5 |
| *Dicredit* : *vs* 1/8 — *s* 1/4 — *m* 1/2 — *vm* 3/4 — *e* 1. | |
| SHOULDERS. — Of medium height ; of medium thickness, and smoothly rounded at tops ; broad and full at sides : smooth over front . . . . . | 4 |
| *Discredit*: *vs* 1/2 — *s* 1/4 — *m* 1/2 — *vm* 2/4 — *e* 1. | |
| CHEST. — Deep and low ; well filled and smooth in the brisket ; broad between the forearms ; full in the foreflanks (or through at the heart) . . . . . | 7 |
| *Discredit* : *vs* 1/4 — *s* 1/2 — *m* 1 — *vm* 1 1/2 — *e* 2. | |
| CROPS. — Comparatively full ; nearly level with the shoulders . . . . . | 4 |
| *Discredit* : *vs* 1/4 — *s* 1/2 — *m* 1 — *vm* 1 1/2 — *e* 2. | |
| CHINE. — Strong ; straight, broadly developed, with open vertebrae. . . . . | 6 |
| *Discredit* : *vs* 1/8 — *s* 1/4 — *m* 1/2 — *vm* 3/4 — *e* 1. | |
| BARREL. — Long ; well rounded ; with large abdomen ; strongly and trimly held up | 7 |
| *Discredit* : *vs* 1/4 — *s* 1/2 — *m* 1 — *vm* 1 1/2 — *e* 2. | |
| LOIN AND HIPS. — Broad ; level or nearly level between hook-bones ; level and strong laterally ; spreading out from the chine broadly and nearly level ; the hook-bones fairly prominent . . . . . | 7 |
| *Discredit* : *vs* 1/8 — *s* 1/4 — *m* 1/2 — *vm* 3/4 — *e* 1. | |

(1) Gardner M. H. Superintendent. Delavan, Wisconsin.

Contents

RUMP. — Long; broad; high; nearly level laterally; comparatively full above the thurl; carried out straight to dropping of tail . . . . . 7
*Discredit: vs* 1/8 — *s* 1/4 — *m* 1/2 — *sm* 3/4 — *e* 1.

THURL. — High; broad . . . . . 4
*Discredit: vs* 1/4 — *s* 1/2 — *m* 1 — *vm* 1 1/2 — *e* 2.

QUARTERS. — Deep; broad; straight behind; wide and full at sides; open in the twist . . . . . 5
*Discredit: vs* 1/8 — *s* 1/2 — *vm* 3/4 — *e* 1.

FLANKS. — Deep; full . . . . . 2
*Discredit: vs* 1/8; *s* 1/4; *m* 1/2; *vm* 3/4; *e* 1.

LEGS. — Comparatively short; clean and nearly straight; wide apart; firmly and squarely set under the body; arms wide, strong and tapering; feet of medium size, round, solid and deep . . . . . 5
*Discredit: vs* 1/8 — *s* 1/4 — *m* 1/2 — *vm* 3/4 — *e* 1.

TAIL — Large at base, the setting well back; tapering finely to switch; the end of bone reaching to hocks or below; the switch full . . . . . 2
*Discredit: s* 1/8 — *m* 1/4 — *e* 1/2.

HAIR AND HANDLING. — Hair healthful in appearance; fine, soft and furry; skin of of medium thickness and loose; mellow under the hand; the secretions oily, abundant and of a rich brown or yellow color . . . . . 10
*Discredit: vs* 1/4 — *s* 1/2 — *m* 1 — *vm* 1 1/2 — *e* 2.

MAMMARY VEINS. — Large; full; entering large orifices; double extension; with special development, such as forks, branches, connections, etc . . . . . 10
*Discredit: vs* 1/4 — *s* 1/2 — *m* 1 — *vm* 1 1/2 — *e* 2.

RUDIMENTARY TEATS. — Large, well placed . . . . . 2
*Discredit: vs* 1/8 — *s* 1/4 — *m* 1/2 — *vm* 3/4 — *e* 1.

ESCUTCHEON. — Largest; finest . . . . . 2
*Discredit: vs* 1/2 — *s* 1 — *m* 2 — *vm* 3 — *e* 4.

* GENERAL VIGOR. — For deficiency Inspectors shall discredit from the total received not to exceed eight points.
*Discredit: vs* 1 — *s* 2 — *m* 3 — *vm* 5 — *e* 8.

* GENERAL SYMMETRY AND FINENESS. — For deficiency Inspectors shall discredit from the total received not to exceed eight points
*Discredit: vs* 1 — *s* 2 — *m* 3 — *vm* 5 — *e* 8.

* GENERAL STYLE AND BEARING — For deficiency Inspectors shall discredit from the total received not to exceed eight points.
*Discredit: vs* 1 — *s* 2 — *m* 3 — *vm* 5 — *e* 8.

* CREDITS FOR OFFSPRING. — A bull shall be credited one point in excess of what he is otherwise entitled to, for each and every animal of which he is sire actually entered in the Advanced Register, not to exceed ten in number

* In scaling for the Advanced Register, defects caused solely by age, or by accident, or by disease not hereditary, shall not be considered. But in scaling for the show ring, such defects shall be considered and duly discredited

* A bull that in the judgment of the Inspector will not reach, at full age and in good flesh, 1,800 lbs., live weight, shall be disqualified for entry in the Advanced Register

* No bull shall be received to the Advanced Register, that with all credits due him, will not scale, in the judgment of the Inspector, at least 80 points.

| | |
|---|---|
| Perfection . . . . . | 100 |
| Total discredit . . . . . | ..... |
| Net score. . . . . | ..... |

* Not now in use by Advanced Register, but of great value as an aid in judging cattle.

## Score for Holstein-Friesian cow.

(The interlines relate entirely to the method of application agreed upon by the Inspectors in order to secure uniformity of work. The abbreviations are as follows: vs, very, slight; s, slight; m, marked; vm, very marked; e extreme.)

| | Contents |
|---|---|
| Head. — Decidedly feminine in appearance; fine in contour | 2 |
| *Discredit: vs* 1/8 — *s* 1/4 — *m* 1/2 — *vm* 3/4 — *e* 1. | |
| Forehead. — Broad between the eyes; dishing | 2 |
| *Discredit; vs* 1/8 — *s* 1/4 — *m* 1/2 — *vm* 3/4 — *e* 1. | |
| Face. — Of medium length; clean and trim especially under the eyes, showing facial veins; the bridge of the nose straight | 2 |
| *Discredit: s* 1/8 — *m* 1/4 — *e* 1/2. | |
| Muzzle. — Broad with strong lips. | 1 |
| *Discredit: s* 1/8 — *m* 1/4 — *e* 1/2. | |
| Ears. — Of medium size; of fine texture; the hair plentiful and soft; the secretions oily and abundant | 1 |
| *Discredit: m* 1/8 — *e* 1/4. | |
| Eyes. — Large; full; mild; bright | 2 |
| *Discredit: s* 1/8 — *m* 1/4 — *e* 1/2. | |
| Horns. — Small; tapering finely towards the tips; set moderately narrow at base; oval; inclining forward; well bent inward; of fine texture; in appearance waxy | 1 |
| *Discredit: m* 1/8 — *e* 1/4. | |
| Neck. — Long; fine and clean at juncture with the head; free from dewlap; evenly and smoothly joined to shoulders | 4 |
| *Discredit: vs* 1/8 — *s* 1/4 — *m* 1/2 — *vm* 3/4 — *e* 1. | |
| Shoulders. — Slightly lower than the hips; fine and even over tops; moderately broad and full at sides | 3 |
| *Discredit: vs* 1/8 — *s* 1/4 — *m* 1/2 — *vm* 3/4 — *e* 1. | |
| Chest. — Of moderate depth and lowness; smooth and moderately full in the brisket; full in the foreflanks (or through the heart) | 6 |
| *Discredit: vs* 1/4 — *s* 1/2 — *m* 1 — *vm* 1 1/2 — *e* 2. | |
| Crops. — Moderately full | 2 |
| *Discredit: vs* 1/4 — *s* 1/2 — *m* 3/4 — *vm* 1 1/2 — *e* 2. | |
| Chine. — Straight; strong; broadly developed, with open vertebrae | 6 |
| *Discredit, vs* 1/8 — *s* 1/4 — *m* 1/2 — *vm* 3/4 — *e* 1. | |
| Barrel. — Long; of wedge shape; well rounded; with a large abdomen, trimly held up (in judging the last item age must be considered) | 7 |
| *Discredit: vs* 1/8 — *s* 1/4 — *m* 1/2 — *vm* 3/4 — *e* 1. | |
| Loin and hips. — Broad; level or nearly level between the hook-bones; level and strong laterally; spreading from chine broadly and nearly level; hook-bones fairly prominent | 6 |
| *Discredit: vs* 1/8 — *s* 1/4 — *m* 1/2 — *vm* 3/4 — *e* 1. | |
| Rump. — Long; high; broad with roomy pelvis; nearly level laterally; comparatively full above the thurl; carried out straight to dropping of tail | 6 |
| *Discredit: vs* 1/8 — *s* 1/4 — *m* 1/2 — *vm* 3/4 — *e* 1. | |
| Thurl. — High; broad | 3 |
| *Discredit: vs* 1/4 — *s* 1/2 — *m* 1 — *vm* 1 1/2 — *e* 2. | |
| Quarters. — Deep; straight behind; twist filled with development of udder; wide and moderately full at the sides | 4 |
| *Discredit: vs* 1/8 — *s* 1/4 — *m* 1/2 — *vm* 3/4 — *e* 1. | |

Contents

FLANKS. — Deep; comparatively full . . . . . 2
*Discredit*: *vs* 1/8 — *s* 1/4 — *m* 1/2 — *vm* 3/4 — *e* 1.

LEGS. — Comparatively short; clean and nearly straight; wide apart; firmly and squarely set under the body; feet of medium size, round, solid and deep . . 4
*Discredit*: *vs* 1/8 — *s* 1/4 — *m* 1/2 — *vm* 3/4 — *e* 1.

TAIL. — Large at base, the setting well back; tapering finely to switch the end of the bone reaching the hocks or below; the switch full. . . . . 2
*Discredit*: *s* 1/8 — *m* 1/4 — *e* 1/2.

HAIR AND HANDLING. — Hair healthful in appearance; fine, soft and furry; the skin of medium thickness and loose; mellow under the hand; the secretions oily, abundant and of rich brown or yellow colour . . . . . 82
*Discredit*: *sv* 1/4 — *s* 1/2 — *m* 1 — *vm* 1 1/2 — *e* 2.

MAMMARY VEINS. — Very large; very crooked (age must be taken into consideration in judging of size and crookedness); entering very large or numerous orifices; double extension; with special developments, such as branches, connections, etc. . . . . 10
*Discredit*: *vs* 1/4 — *s* 1/2 — *m* 1 — *vm* 1 1/2 — *e* 2.

UDDER. — Very capacious; very flexible; quarters even; nearly filling the space in in the rear below the twist, extending well forward in the front; broad and well held up . . . . . 12
*Discredit*: *vs* 1/4 — *s* 1/2 — *m* 1 — *vm* 1 1/2 — *e* 2.

TEATS. — Well formed; wide apart, plumb and of convenient size . . . . . 2
*Discredit*: *vs* 1/4 — *s* 1/2 — *m* 1 — *vm* 1 1/2 — *e* 2.

ESCUTCHEON. — Largest; finest . . . . . 2
*Discredit*: *vs* 1/2 — *s* 1 — *m* 2 — *vm* 3 — *e* 4.

* GENERAL VIGOR. — For deficiency Inspector shall discredit from the total received not to exceed eight points.
*Discredit*: *vs* 1 — *s* 2 — *m* 3 — *vm* 5 — *e* 8.

* GENERAL SYMMETRY AND FINENESS. — For deficiency Inspector shall discredit from the total received not to exced aight points.
*Discredit*: *vs* 1 — *s* 2 — *m* 3 — *vm* 5 — *e* 9.

* GENERAL STYLE AND BEARING. — For deficience Inspectors shall discredit from the total received not to exceed eight points.
*Discredit*: *vs* 1 — *s* 2 — *vm* 3 — *m* 5 — *e* 8.

* Credits for Excess of Requirement in Production. — A cow shall be credited one point in excess of what she is otherwise entitled to, for each and every eight per cent that her milk or butter record exceeds the minimum requirement.

* In scaling for the Advanced Register, defects cause solely by age, or by accident or by disease not hereditary, shall not be considered. But in scaling for the show ring, such defects shall be considered and duly discredited.

* A cow that in the judgment of the Inspector will not reach at full age, in milking condition and ordinary flesh, 1,000 lbs weight, shall be disqualified for entry in the Advanced Register

* No cow shall be received to the Advanced Register that, with all credits due her, will not scale, in the judgment of the Inspector, at least 75 points. (See in last paragraph of Rule VI an exception to these requirements.).

Perfection . . . . . 100
Total discredit . . . . . .....

Net score . . . . . ....

* Not now in use by Advanced Register, but of great value as an aid in judging cattle.

1194 – **Score Cards for Simmenthal Cattle.** — See this *Bulletin*, No. 1158.

1195 – **Establishment of a Herd-Book for the Caracu Breed of Brazil.** — *A Estancia*, 4th Year, No. 5, pp. 147-149. Porto Alegre, May 1916.

A society has been founded for the Brazilian Caracu Cattle (1) in the State of São-Paulo, Brazil, under the patronage of the Ministry of Agriculture. It is open to all breeders living in the State of São-Paulo.

In the Caracu Herd-Book can be entered.

1) Pure bred animals, intended for breeding, belonging to a member, and having been passed by the Committee of Registration.

2) Offspring of parents already entered.

Such animals are registered only provisionally. They will be definitely entered only they have reached the prescribed age and then only after a fresh examination.

The registrations are free. The Commission of Registration nominated by the Society, will visit the farms of members twice a year in order to examine pure bred animals for registration in the Caracu Herd-Book. The Commission is composed of two live-stock experts of the Ministry of Agriculture, an official veterinary surgeon and three practical breeders elected from amongst the members.

Members must communicate the birth of calves from pedigree animals not more than two months after calving ; when pedigree animals change hands the names of buyer and seller must be given. The death of registered animals must be notified.

For every registered animal a certified pedigree may be obtained signed by the president and secretary of the Society and endorsed by the Ministry of Agriculture of the State of São-Paulo. All the animals definitely registered in the Caracu Herd-Book must bear the mark of the Society and their respective numbers.

A revised edition of the herd-book will be published every year by the Society.

1196 – **Dairying on the River Murray Areas.** — LANE, G., in *The Journal of Agriculture of South Australia*, Vol. XIX, No. 12, pp. 1043-1046. Adelaide, July 1916.

In a paper read before the Conference of River Murray Branches of the Agricultural Bureau on the development of milk production in the arid and irrigated parts of this region, the writer deals fully with the problem of the production of forage in the summer months and emphasises the importance of ensilage in the feeding of dairy cattle.

According to the writer it is only by the preservation of forage in the silo that milk production can be successfully undertaken on farms deprived of irrigation. Otherwise the advantages to be obtained during the period of the year when green forage is available are nullified by the losses to which agriculture is exposed in the dry months, when the production of forage is impossible without irrigation. Milk production in areas which are semiarid or where the rains are irregular, must henceforward be considered as closely

(1) See *R.* October 1916, No. 1093.

connected with the ensilage of the forage, and the silo would lend a strong support and a factor of success to cattle and sheep breeding in these areas.

The overhead silo, cylindrical and built of stone or lime-concrete gives the best results. Maize and sorghum are the silage crops most employed; but oats, barley and wheat also give good results, if care is taken to ensile them as soon as they are reaped at the beginning of the ripening of the grain. The good results obtained with the Jersey breed of cows is described, and the crossing of typical milking strain Jersey bulls with Ayrshire and Shorthorn cows is recommended. The average production of the writer's herd was well over 6,300 lbs. of milk per cow for eight months. The writer does not consider that machine milking has sufficient advantage over hand milking to give it the preference. It is a mistake to give calves skim milk too soon. When the mother's milk is discontinued the calf should receive at first half ordinary and half separated milk. To ensure success either in milk or butter selling, the animal heat should be got out of the fluid at the earliest possible moment.

1197 – **Mendelism of Short Ears in Sheep.** — RITZMAN E. G., in *Journal of Agriculture Research*, Vol. VI, No. 20, pp. 797-798. Washington, D. C., August 14, 1916. SHEEP

The ordinary ear lengths of the various breeds of sheep approximate very closely to 10 cm. (4 inches) or a little over. On the other hand the longest of the "short ears" so far observed in a mature animal measure 7 cm. (2 $^3/_4$ inches), and they are somewhat thicker than ordinary type of ear. The transmissibility of this feature has been studied by the writer at the New Hampshire Agricultural Experiment Station, United States, in the case of one native ewe and her progeny, which number 15 head, and by Dr C. B. DAVENPORT of the Station for Experimental Evolution, of the Carnegie Institute, who bred two short ear animals supplied by the writer.

The results show in a uniform and concordant way that the "short ear" trait constitutes a simple Mendelism unit factor.

1198 – **The Travelling of Flocks in the Dinaric Zone (Eastern Adriatic).** — DEDIJER J., in *Annales de Géographie*, Year XXV, No. 137, pp. 347-365. Paris, September 15, 1916.

The annual travelling of flocks and herds to upland summer grazing is quite distinct from other forms of pastoral migrations such as is practised by the nomads of the steppes. Travelling shepherds unlike the nomads are really attached to the soil, not only in their lowland villages but also in the mountain pastures which they visit periodically. This summer migration finds its true home in the Mediterranean region for besides being usual amongst the primitive peoples of the Caucasus, Asia Minor and North Africa, it is practises by the most highly civilized European nations, and is a standing proof that analogous geographical factors entail analogous social developments. Working from Belgrade, the writer has spent several years studying the migrations in the mountain system running down the eastern side of the Adriatic in order to determine how far the custom is modified by the physical character of the surface.

Three forms of pastoral life are distinguished: 1) the travelling flocks

of the coast ; 2) the non-migrating flocks of the Mid-dinaric zone, and 3) the migrating flocks of the Pannonian Plain. These three groups correspond to the three divisions of the region brought about by the position of the mountain range which runs from north west to south east. On the Adriatic side the country shows all the signs of the Mediterranean influence in climate, flora and fauna ; but on the Pannonian Plain which is on the northern and north eastern side of the ridge, the climate, flora and fauna of Central Europe prevail. Between these two zones lies the region of high mountains where conditions of life have arisen somewhat similar to those found in Alpine regions.

I. *The travelling of flocks in the Adriatic zone.* — Between the coast and the watershed 3 regions are distinguished : 1) the low region, reaching up to 800 to 2500 ft. in its highest parts, occupied by the villages of the people who undertake the summer migrations, 2) the intermediate zone where stock raising is practised without migrations ; 3) the zone of summer pastures on the high mountains, occupied intermittently. Migrations begin early in June. In the low region the drought is severe and the population labour incessantly to increase the water supply. With infinite trouble too, they reclaim and cultivate small isolated pieces of land, going so far in some places as to gather manure in the village streets to place in the crevices of rocks and then planting vines therein. In other places they build walls across the dry beds of torrents so that in the rainy season a sediment should be deposed ; by persevering for 30 years, one man has obtained a field yielding 2 tons of maize by such means.

Where a suitable hill adjoins the village, lambing stations are often established at altitudes of 1500 to 2500 ft. to which the flocks are brought from the high mountain for the winter season, but if there is no convenient hill of that kind then the flocks are brought right down to the villages. Where the neighbouring foothills reach an altitude of over 4000 ft. then the flocks do not need to migrate to the high mountains for summer pasture.

In the region of Duvno (western Herzegovina) the migrations depend on the water table. During exceptional droughts, it may occur that shepherds who have returned home from the high mountain in early autumn have to take their flocks back to higher altitudes for water. On some routes, such as those from the arid Karst region, there are regular halting places where the shepherds remain for some time.

A more primitive form of migration exists in some parts where the entire population leaves the villages for six months of the year and accompanies the flocks to the high mountains. In other parts where the land is more fertile, tillage has largely replaced stock raising and migrations have been abandoned on account of the small size of the flocks.

II. *The non-migrating flocks of the Mid-dinaric zone.* — This zone consists of a high region (above 2300 ft. on the Adriatic side) where the rainfall is well distributed throughout the year and the summer heat never excessive. Local migrations only take place from the deep river valleys which even in those altitudes are unbearably hot in summer. Being very narrow the cultivated surface is very restricted and further it is planted in fruit

trees, so that the summer pasturing of livestock is a difficult matter. The herds are consequently sent to the neighbouring mountain sides.

III. *The migrating flocks of the Pannonian zone.* — On the north eastern side of the ridge the migrations are in the opposite direction, *i. e.* from mountain villages to lowland pastures, and take place twice a year, in autumn and in spring. Whereas the migrations on the Adriatic side are undertaken on account of heat and drought, the flocks on the Pannonian side are driven to the mountains by snow and excessive cold. In the autumn, flocks of 800 to 1000 sheep come down to the plain for pasture and when the first snow occurs return to the mountain where they winter in barns. Then in spring they come down again for what is known as the " lambing migration ".

1199 – **A Model Poultry Farm in Uruguay.** — *El Estanciero*, 6th Year No. 137, pp. 9-11. Montevideo, June 15, 1916. POULTRY

The most important poultry farm in Uruguay is situated close to the station of Toledo. It was established in 1913 by the Government with a total head of 350 birds, comprising 200 Leghorn fowls obtained from the United States, 100 Prat Catalonians of Spanish origin, groups of three fowls each of the breeds White Plymouth Rock, Bastard Plymouth Rock, Buff Orpington, Faverolles Wyandotte (simple comb and rose comb), and Minorca, and 20 ducks of the Pekin breed.

In 1915 the farm produced 39 877 eggs. Of these 6240 were given to farmers for breeding, 8000 were sold for consumption and the farm set the remainder obtaining 9873 chickens and 200 ducklings of the Pekin breed. In the same year 5000 fowls were sold. A head of 300 fowls and 300 ducks now maintained on the farm.

The farm is provided with the most up to date plant. It can breed 3000 chickens per annum and its 20 incubators have a capacity of 4800 eggs. The chickens are kept shut up for one month ; they are then transferred to a special rearing house, and from there to large enclosures. By far the largest proportion though are sold immediately they are hatched. In order to avoid all possibility of contagion, water is distributed from a tank to all enclosures and poultry houses in such a way that no two chickens can drink from the same place. A 5 HP oil engine is used for a pump and for driving the other mechanical devices required by the farm.

The administration of the farm is entrusted to a manager and an assistant who work under general directions from a committee.

1200 – **The " Ideal " Crespi-Balbi Hive.** — *L'Agricoltore moderno*, Year III, No. 8, pp. 131-133. Turin, August 1916. BEE-KEEPING

The International Museum of Agriculture at Turin has received and reported on a new hive, the " Ideal ", sent by its inventor Mr C. Crespi-Balbi of Busto Arsizio (Italy). It is an improvement on the type originally introduced by Pettitt in England and by Tonelli in Italy, and combines the good qualities of the American and German hives.

In the Pettitt-Tonelli type the moveable frames have curved sides while in the new type the sides are straight and in the form of a pentagon.

Two very fine wires which also serve to attach the comb foundations bind each frame together with great rigidity. Though the frames are placed longitudinally in the hive draughts are prevented by having the entrance at the bottom and right in the middle. The frame of the supers is only 5 in. high, the better to prevent the queen from going up into it.

When it is required to examine the hive, the top may be lifted off if the weather be warm enough, otherwise one or other of the side walls may be removed. By this means only half the sections are uncovered at any one moment and for a much shorter time than is possible with the German

*The "Ideal"* CRESPI-BALBI *hive.*

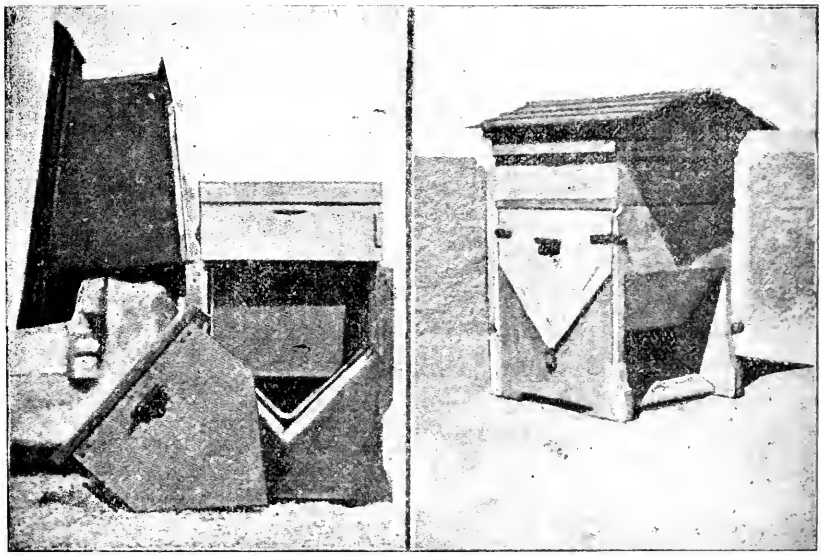

In sections Ready for use.

hives. For casual examinations the mirror placed in the rear wall is used When necessary the bees may be fed through a hole in the front wall.

The walls of the hive are nearly 1 ¼ in. thick and give ample protection against temperature changes; it has been shown in Lombardy that the increase in yield obtained in hives with cavity walls is not sufficient to compensate for the increased cost of the hive.

A new feeder has also been put on the market by Mr. Crespi-Balbi. It is a combination of the Guzzi type with Root's "Simplex".

1201 – **Ontario Beekeepers Association Honey Crop Report for 1916** *in The Canadian Horticulturist and Beekeeper*, Vol. 24, N°. 9, p. 225. Peterboro, Ont. September 1916.

The White Honey Crop in 50 counties of Ontario, in 1916, according to the Ontario Beekeepers' Association, was 2 127 903 pounds, from 23 763 colonies (spring count) with an average of 89,6 pounds per colony. The honey crop in 1915 was 1 175 871 pounds from 20 402 colonies.

1202 – **The Work of the Institute for Research on Silkworms at Portici (Italy).** — ACQUA C., *Rendiconti dell'Instituto bacologico della R. Scuola superiore di Agricoltura in Portici*, Vol. I, pp. 1-98. Portici, 1916. SERICULTURE

I. *Experiments on the digestion of silkworms.* — In order to investigate the digestibility of proteins, fats and carbohydrates by silkworms a quantity of intestinal juice was extracted from worms under normal conditions of rearing and its effect on the various substances was studied *in vitro*. The presence of an active protease was proved. This ferment works in an alcaline medium and must be considered of the nature of a trypsin, acting on blood fibrin and on egg albumen either in the liquid or coagulated form. Starch and fats were untouched and this was confirmed by microchemical tests carried out on pieces of ingested mulberry leaf which were removed from various parts of the intestinal tract. On the other hand, as soluble sugars which are contained in considerable quantities by the leaf were digested, the starch in the leaf must be absorbed indirectly. The cell membranes of ingested leaves remained absolutely unaltered, so that absorption of protein substances from the cytoplasm could only take place after the rupture of the cell walls. With regard to the chlorophyll, it would seem certain that where the tissue was disintegrated the pigment contained in the chloroleucites was absorbed, but where the chloroleucites remained enclosed inside the cells, the pigment remained unaltered. This fact was confirmed by a spectroscopic test. The secretions from the anterior and middle portions of the intestine were precisely similar in their effect, but the secretion from the posterior part of the intestinal tract was absolutely inactive.

II. *Phototaxy in silkworms* (1).

III. *Experiments on the absorption of glucose by stems and leaves of mulberry trees.* — In a previous paper (2) a description has already been given of the methods adopted for obtaining the absorption of liquids by the aerial parts of plants. It consists in cutting through the petioles near the blade of the leaf or cutting the tips of young shoots and placing the cut surfaces in the solution to be tried. The method was applied to *Morus alba*, using a solution of 5 per cent glucose for the cut ends of young shoots or a solution of 6 to 10 per cent applied in a glass tube to a wound made in the trunk of the tree. Where the experimental plants were very young, the glucose absorbed had a very marked effect : growth was increased ; the shoots were longer and thinner and much less rigid so that they required support ; the leaves were larger and thinner showing a considerable reduction of the palissade and spongy tissues. With the medium-sized plants the growth was

(1) See *R.* March 1916, No. 328. (*Ed.*)

(2) *Rendiconti dell'Accademia dei Lincei*, Vol. XXIII, 1913.

still affected but to a less degree an dwith adult trees, the differences obtained were very small. A microscopic examination revealed equal quantities of starch in the leaves of the test plants and of the control plants, and Fehling's solution showed no accumulation of glucose in the treated leaves, so that it may be concluded that the absorbed solution was used up in the development of the plant.

IV. *An electric bell for giving warning of changes of temperature during incubation.* — The writer has invented a new instrument to ensure a constant temperature during incubation. It is sensitive to half a degree C., is simple and inexpensive, and may be obtained from CAROSI, Rome for 2 lire.

V. *Autumn rearing of silkworms.* — Autumn rearing as a whole has not proved a success chiefly owing to the imperfect preparation of the *graine*. The stripping of mulberry trees in autumn, if properly carried out, need entail none but the very slightest injury to the trees, and where the trees are abundant the supply of leaves should offer no difficulty.

Some of the methods of obtaining *graine* for autumn hatching are to be condemned, *i. e.* the use of eggs from the previous season or from a very early spring hatching after storage at low temperature during the summer. Other methods yield worms of doubtful vigour, as for instance the Quajat method where the *graine* is prepared in October, estivates during the winter, and hibernates during the summer. Occasionally the use of retarded eggs has been recommended before they have been tested thoroughly under practical conditions (*e. g.* the retardation of spring eggs by means of electricity, acids, etc.). The best method is undoubtedly that of Dr CRIVELLI; it is known as the « embryostatic » method, and has given excellent results in practice over a number of years. Details of the management have been kept secret, but in general outline they must resemble that of MARTINI (given below) as both yield identical results

*Management of silkworms under the Martini system.*

| | Temperature at which the silkworms must be maintained °C. |
|---|---|
| *Period of estivation:* | |
| From laying time to end of August | 22 to 27 |
| During September | 20 " 22 |
| " October | 17 " 20 |
| From November to end of February | 16 " 17 |
| " March 1 to 20 | 8 " 10 |
| *Period of hibernation:* | |
| From March 20 to July 30 | 2 " 3 |
| " August 1 to about August 15 when incubation begins | gradual rise |

The writer states that 20 years ago he had the opportunity of seeing some extensive rearings carried out with *graine* supplied by Dr Crivelli and even tested the eggs himself. In every case most satisfactory results were obtained. Autumn rearing had become popularized to the point of being a matter of current practice in parts of Central Italy, but with the spread

of the practice, the sale of unreliable *graine* became common and led finally to a season of complete and general failure after which autumn rearing fell into disrepute and was abandoned.

1203 – **The Work of the Experiment Station for Silk Worms at Murcia, Spain, 1910 to 1914.** — VIRGILI A., in *Ministerio de Fomento, Dirección general de Agricultura, Minas y Montes, Estación sericola di Murcia, Memoria descriptiva de los principales trabajos realizados y resultados obtenidos desde 1º de Diciembre de 1910 hasta el 15 Enero de 1914, traslado de la estación y aplicación de los servicios*, pp. 1-100. Murcia, 1915.

1) *Variety Trials.* During the three years 1911 to 1913, 210 gms. of *graine* was obtained from Italy, France, Japan, China and other Spanish provinces and tested at Murcia; the more suitable varieties were then selected and acclimatised for subsequent distribution to rearers. Some Italian varieties proved particularly successful, being heavier yielders than the native varieties and producing a silk which finds a ready market both in Spain and at Marseilles. They have not, however, reached the stage of distribution as they are not yet fully acclimatised.

2) *Incubation of graine for rearers; inspection of home incubation.* — A new State service was instituted 1913 to revise and bring up to date the old fashioned systems of incubation practised in the district. A new incubator of 120 oz. capacity was invented and built by the Station for its own use, while 35 small 10 oz. machines and a number of Orlandi incubators (80 oz.) were lent to rearers in the neighbourhood. The cost of the small incubators (10 oz.) was 17.5 pesatas (14s) and the heating arrangement for each would come to another 2 pesetas. Full instructions for working were supplied with each incubator. Inspectors from the Station also visited 135 farms where 314 oz. of *graine* were being dealt with, and at the Station itself the incubation of 123 oz. was carried out for 128 rearers.

3) *Microscopical examination of silkworms and their eggs.* — Rearers were invited to have their *eggs* tested for *pebrine* and a considerable amount of this kind of work was carried out (Table I). At the same time a

TABLE I. — *Results of the microscopic examination of silk-worm eggs.*

| Years | Silk-worm eggs produced by private person | | | Silk-worm eggs produced by the Station | | |
|---|---|---|---|---|---|---|
| | Number of specimens | Number of cells | Average per cent of infection | Number of specimens | Number of cells | Average per cent of infection |
| 1911 . . . . . | 177 | 21 916 | 8.57 % | 38 | 6 915 | 10.90 % |
| 1912 . . . . . | 237 | 37 105 | 6.43 | 55 | 13 075 | 6.60 |
| 1913 . . . . . | 930 | 108 692 | 20.94 | 87 | 24 172 | 22.05 |

free course of instruction was offered to rearers on the technique of examination and the provincial council awarded a microscope as a prize to all those who became thoroughly proficient. Some rearers took full advan-

tage of the classes and registered a daily attendance during the 3 years 1911 to 1913 in spite of the fact that their homes were 10 miles away. The total number of men entered over the period was 30 of which 12 were awarded the prize. In 1913, owing to an epidemic of flacherie arising from some *eggs* imported from France, the number of worms submitted for examination was vastly increased.

4) *The baking of cocoons.* — Until the Station was established the rearers in the district had no proper baking plant, so that they were obliged to market their cocoons without delay and often lost over their hurried transactions. The baking was immediately undertaken by the Station free of charge and the value of the treatment was so clearly and quickly demonstrated that a cooperative society was soon formed for the erection of ovens on the Murcia plain. In the 3 years 1911 to 1913 the new plant dealt with over 25 tons of cocoons for its members, while the Station treated about 22 tons in 1911 and 8 tons in 1912.

In 1913, no heating was done at the Station as the oven in the new premises was not yet ready.

5) *The free distribution of eggs.* — In Table II are set out details of the distribution of silkworm eggs.

TABLE II. — *Silk-worm eggs distributed by the Silk Experiment Station of Murcia between* 1910-1913.

| Periods | Provinces | Villages | Breeders | Amount of silk-worm eggs |
|---|---|---|---|---|
| December 1910 . . . . . | 14 | 28 | 36 | 49 ounces and 20,30 grms. |
| Year 1911 . . . . . | 20 | 42 | 96 | 75 » » 27.50 » |
| Year 1912 . . . . . | 20 | 58 | 186 | 116 » » 20.78 » |
| Year 1913 . . . . . | 20 | 46 | 240 | 138 » » 22.50 » |

6) *Demonstration farms.* — In cases where the nature and position of a farm and the quality of its farmer make it suitable for demonstration purposes, the Station provides a free equipment. This includes young mulberry trees to supplement or enlarge the plantations, *graine* and all the apparatus required for the rearing of silkworms, including an incubator. When possible, a skilled workman is also sent from the Station for the rearing season, but in any case help and advice are always given and these demonstration farms are looked upon as official sub-stations. During the 3 years 1911 to 1913, 30 such farms were established.

7) *Free distribution of mulberry cuttings and seeds.* — From 1910 to 1913, 69 753 cuttings and 18 lbs. of seed were distributed.

8) *New headquarters of the Station.* — The State has taken over land from the Province in order that the Station should be enlarged and reorganised. The grounds now include 2 $^1/_4$ acres of newly planted mulberries, 21 000 1-year old trees, 21 000 2-year old trees, and 9000 3-year

old trees. Irrigation can be practised if necessary as there is a good well with a motor pump. A new oven for cocoons has been built.

9) *Development of the various branches.* — The writer points out that the organisation will need to be extended more particularly as follows:

*a*) The cultivation of the mulberry tree must receive more attention, manurial trials should be made and methods of pruning tested.

*b*) Itinerant inspectors and advisers should be appointed.

*c*) Cold storage should be established for the hibernation of *graine* with store rooms large enough to hold 30 000 oz. of *graine*, so that all the rearers of the Murcia district would be able to use them.

*d*) The Station should undertake the disinfection of rearing houses as enquiries on this subject are constantly being received.

*e*) The foundation of a practical School of Agriculture and of a school for the special training of workmen is also under consideration.

1204 – **Wild Silkworms of Africa** — See this *Bulletin* N°. 1162.

## FARM ENGINEERING.

AGRICULTURAL MACHINERY AND IMPLEMENTS

1205 – **Manufacture and Co-operative Supply of Agricultural Machinery and Implements in the Russian Empire in 1913** (1). — I. Дешевой М.), (Dechevoj M.), Manufacture of agricultural machinery in Russia, in *Матина въ сельскомъ Хозяйствѣ* (Agricultural Machinery), Nos. 10 and 11, pp. 392-394 and 430-434. Kiev, May 31 and June 15 1916. — II. Ковалъ В. (Koval V. D.), Co-operative supply of agricultural machinery, *Ibid*, No. 1. pp. 11-16. Kiev, January 15, 1916.

I. — The Office for Agricultural Machinery in the Russian Ministry of Agriculture has collected data as to the manufacture of machinery and implements in Russia in 1913 The more important of these are as follows.

The total number of undertakings engaged in the production of agricultural machinery and implements in 1913 was 921 (against 826 in the previous year), of which 770 were in 48 provinces of European Russia, 108 in Poland, 27 in the Caucasus and 16 in Siberia. All these concerns manufactured in 1913 machines and implements of a value of £ 6 437 000 (£ 5 366 000 in 1911 and £ 5 600 000 in 1912), of which £ 5 841 000 came from the provinces of European Russia, £ 491 700 from Poland, £ 45 070 from the Caucasus and £ 59 260 from Siberia. The industry has developed especially in Southern Russia, notably in the province of Kheron, followed in decreasing order by the provinces of Ekaterinoslav, Taurida, Kharkov and the Don Cossacks. Elsewhere the manufacture of farm machinery is highly successful in the provinces of Moscow, Orel, Kiev, Livonia, Warsaw, Perm, Kaluga and Lublin.

(1) On this subject : in 1911, see *R.* 1914, No. 562 ; in 1912, see *R.* 1915, No. 949.

As regards output the factories are divided into the following four groups:

| Value of output of each factory | Number of factories | Total value of output |
|---|---|---|
| 1) less than £ 1 064 | 568 | 149 900 |
| 2) from £ 1 064 to £ 10 640 | 248 | 900 600 |
| 3) from £ 10 640 to £ 106 400 | 96 | 2 895 200 |
| 4) more than £ 106 400 | 9 | 2 492 200 |
| Totals | 921 | 6 437 900 |

*Value and distribution of the output of agricultural machinery and implements in* 1913

| | | £ | £ |
|---|---|---|---|
| Implements for soil cultivation | Ploughs | 1 187 000 | 1 347 000 |
| | Harrows and cultivators | 147 000 | |
| | Rollers | 13 000 | |
| Drills | in rows | 654 000 | 754 000 |
| | special and combined | 59 000 | |
| | broadcast | 41 000 | |
| Machines and implements for hay making | Scythes | 107 000 | 147 900 |
| | Mowers | 900 | |
| | Rakes and tedders | 5 000 | |
| | Baling presses | 35 000 | |
| Machines and implements for corn harvesting | Sickles | 58 000 | 1 158 400 |
| | Mowers | 907 000 | |
| | Reapers | 193 000 | |
| | Binders | 400 | |
| Thrashing machines | horse | 1 471 000 | 1 521 000 |
| | steam | 23 000 | |
| | hand | 18 000 | |
| | special | 9 000 | |
| Apparatus for winnowing and sorting grain | | | 265 000 |
| Machinery for manufacture of feeding stuffs | | | 149 000 |
| Motors | | | 356 000 |
| Other agricultural machines and implements | | | 704 000 |

The third group is thus the most important, while the last, with only 9 works, produced 38.7 per cent of the Empire's total output.

The total number of employees engaged in the industry in 1913 was about 40 000.

The value of the output of agricultural machinery and implements in 1913 is divided as shown in the accompanying table. The production of thrashing machines comes first, followed by cultivating, harvesting and sowing machines; then come motor machinery, cleaning and sorting

machines and finally machines for preparing food stuffs. The largest increase in output in 1913 was in thrashing machines. Before the war the demands of Russian agriculture for this type could be almost completely satisfied, with the exception of steam thrashing machines. The output of very small works is not included in the above data, as exact figures are not available, but this is very considerable throughout the Russian Empire.

II. — The co-operative supply of farm machinery in Russia is assuming some importance. Actually, of a total value (£ 13 000 000) of machines sold on the Russian market in 1914, 10.8 per cent, or £ 1 502 000 represents purchases made by members of credit associations or by their district societies.

The development of the co-operative supply of agricultural machinery by members of such organisations can be realised from the following figures: in 1912 1 638 co-operators bought goods value £ 677 000; in 1913 their number rose to 2 457 and value of their purchases to £ 1 011 000; in 1914 their number was 3 000, or 20 per cent of the total number (15 000) of co-operators in Russia at that time.

A good proportion of these co-operators are combined in district societies. Eleven of the latter included 723 co-operators, or 24.1 per cent of those dealing in agricultural machinery. The total purchases made by the 11 societies in 1914 reached £ 104 000, or 7 per cent of the total co-operative supply. The majority of the societies belong to Southern Russia and the value of the purchases made by each of them ranges from a minimum of £ 2 120 (Ekaterinslaw society) to a maximum of £ 32 000 (Ektarinbourg society). In spite of the large differences in their purchases, there is a common side to the societies' activities which should not be overlooked. The co-operative supply of machinery is not limited merely to acting as middleman between the manufacturer and the farmer, but is closely related to the improvement of agriculture in the district and consequently is co-ordinated to its needs. For example, almost half the societies have agricultural experts in their service or special adviser who regularly work for them. The greatest activity has been displayed by the Kouban society which has its own staff comprising: 6 agriculturalists, a special expert to the society and advisers in special branches.

The co-operative societies are not satisfied with dealing only, which does not touch the problem of providing the population with agricultural machines, and accordingly they have embarked on co-operative manufacture. An interesting example of this movement is found in the venture of the Melitopol society which has put up a factory for making winnowing machines with an actual output of 1000 per annum. As this venture proved very successful, the directors of the Melitopol society decided last year to start the co-operative manufacture of other agricultural machines. The Ekaterinbourg society has also shown much energy in the construction of its factory: the initiative of this organisation has been favourably received by the Ministry of Agriculture, the Imperial Duma and the Zemstvos. The idea of forming co-opertive factories for agricultural machines is under consideration in other societies, and if the latter succeed in combining

in one organisation, the « Central Society », the problem, according to the writer, should be solved in the near future.

1206 – **Motor Ploughing in France.** — I. De Cabausse P. The present trend of mechanical cultivation, in *La Vie agricole et rurale*, 6th year, No. 41 (entirely devoted to mechanical cultivation) (1), pp. 269-274, 5 figures. Paris, October 7, 1916. — II. Lefort H., New types of ploughs. *Ibidem*, pp. 275-278, 5 figures.

I. — The writer begins by relating the drawbacks of the light petrol tractor which depreciates quickly. He asks if there is not good cause for a return to steam traction. According to Massignon, president of a vineyard syndicate in Anjou, steam could usefully be resumed if the makers would build light machines. It is weight only which puts these motors into dis-

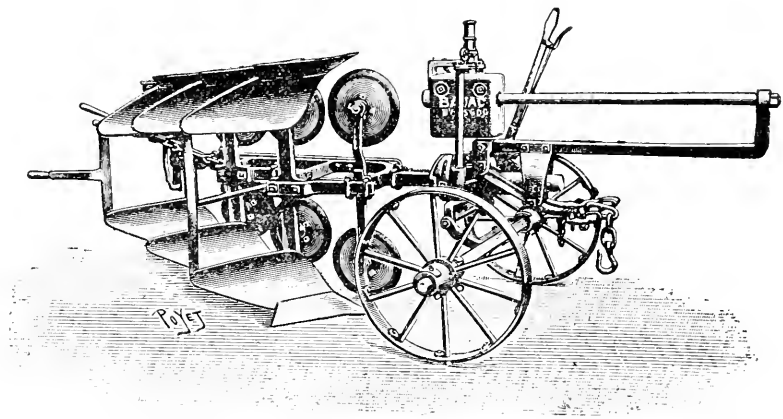


Fig. 1. — Bajac counterbalance plough with moveable balance weight.

favour. The steam engine has an immense advantage over the petrol engine in flexibility: the former can develop, if necessary, three times its nominal power, which the latter cannot do, and it gives a very uniform speed of traction. The return to steam traction will be hastened, according to the writer, by the high prices of paraffin and petrol, which are likely to be permanent on account of the increased consumption.

Besides the question of the tractor, the writer discusses the choice of the cultivating implement, and he considers the advisability of replacing the plough with coulter, share and mould board, by a driven implement.

At the Grignon trials, organised by the Minister of Agriculture in 1913, the judges were not favourably impressed by the machines with driven implements. The writer thinks that the latter should not have been rejected

(1) Besides those abstracted, this number contains the following articles: Dr. Chaveau, Mechanical cultivation. — Schribaux Motor cultivation and soil tilth. — P. Buchard. Demonstration of machines for motor cultivation. — P. Buchard, Public trials of cultivating machinery in 1916. (*E. N.*)

without a larger number of trials: their success depends on the proportion of moisture present in the soil at the time of ploughing.

The writer further deals with cable traction, but does not think that there is much scope for this in France.

II. The majority of the ploughs used for motor cultivation are identical with those designed for animal traction. The only difference is in the greater number of furrows which they can make.

It is difficult to improve the working parts of ploughs so the greater number of modifications during the last few years have centred round the ease of handling the implement.

The writer thinks the BAJAC counterbalance plough with moveable balance weight is particularly interesting (fig. 1): the effort to reverse the

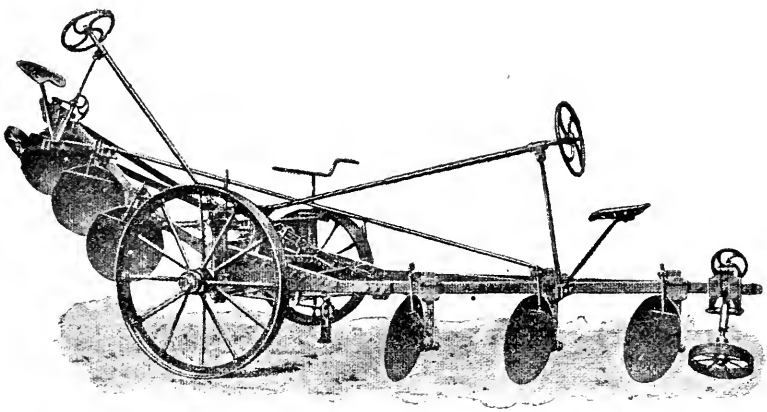

Fig. 2. — BAJAC disc plough.

plough at the headland becomes excessive when the weight of the machine is increased. In order to avoid this, the designer has placed the moveable balance weight on a sliding rod in front of the plough; the length of the rod is calculated so that the weight of the moving mass almost exactly balances that of the body when it is at the extreme end of the rod. The effort required to turn the machine is then very slight; on the other hand, when working, the weight is carried a little behind the place of support, on the body side, which increases the grip.

The writer also mentions the BAJAC disc plough (fig. 2) and the GILTER plough with automatic lift, (fig. 3) specially designed for mechanical cultivation. This machine uses the adhesion of the soil to the supporting wheels of the plough to lift the shares. The shares are raised, not in one block, but one after the other; the same method is used for starting the furrows.

To mitigate the trampling of the animals at the bottom of the furrow, the writer notices the GERTANI plough; he also mentions the MELANI plough with turning fore-carriage — the FLOVER balance-plough which can make

at will either furrows 12 inches broad and 8 inches deep or 16 inches broad and 12 inches deep.

Other recent improvements tend to facilitate the manipulation at the headlands; in the system FALKENBERGER (1) the two bodies turn simultaneously around a horizontal axis, the rotation being caused by the reaction of the ground on the moving body through the agency of a stop. The " Syracuse Reversible " plough has two bodies mounted on separate beams, one turning the furrows to the right, the other to the left; the share is lifted by a pedal or by a spring mounted on a lever which transmits the task of lifting the share to the team, leaving the driver free to steer the team

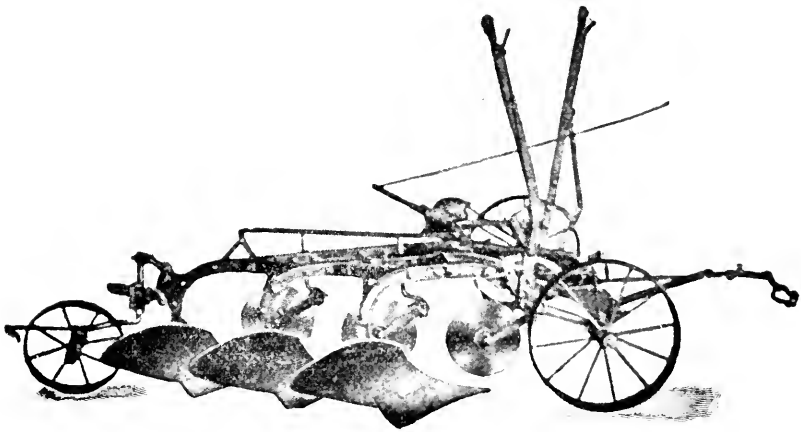

Fig. 3. — GILTLR plough with automatic lift.

at the turns. The other share turns automatically and the whipple-trees come into place by sliding to the end of a hake, so that the machine follows the line of traction.

In order to lift at the headland in some types of multi-furrow ploughs, the tractor driver has only to clutch a cam-shaft when all the shares are successively lifted. The power required is thus small and the headland is not left in a saw-tooth pattern which reduces the tilth. The writer also describes the « Leviathan » drain-plough (already noticed and illustrated in Bulletin 1915, N.° 1329), exhibited at the Smithfield show (London) December 1915 by Messrs MACLAREN.

1207 - **Simple Method of Calculating the Cost of Mechanical Cultivation.** — DE FONTGALLAND A. (Correspondent) in *Comptes Rendus des séances de l'Académie d'Agriculture de France*, Vol. II, No. 28. Paris, July 10, 1916.

An easy method of finding the cost of work to be paid by each member of the organisations for mechanical cultivation is very desirable. Experience of motor-ploughing shows that the petrol consumption (and hence

(1) See *B.* 1915, No. 420.

the net cost of the work) varies in the proportion of 1 to 3, according to type of soil and the depth of ploughing. On these data M. de PONCINS, agricultural advisor to the « Union du Sud-Est » (France), instead of taking as a basis the area and depth of work or the time taken, has found it much simpler to base his costs on the actual consumption of petrol on the work.

The members thus pay only for petrol used, at net price, plus a surcharge of 1*s* 10*d* per gallon to cover other costs, calculated in the following way:

Assuming that the tractor works on a average 150 days each year, at a rate of 5 acres per day, or 750 acres per annum, and that, on average soils it uses about 4 1/2 gallons of petrol per acre. The surcharge then amounts to 8*s* 1*d* per acre, divided as follows:

| | *s* | *d* |
|---|---|---|
| Depreciation of tractor: £480 in 4 years . . . | 3 | 1 1/2 |
| Labour: 2 men . . . . . | 1 | 7 |
| Oil, grease, waste. . . . . | | 11 1/2 |
| Insurance: fire and accident: £13 per annum. . | | 4 |
| Repairs: £36 per annum . . . . . | | 11 1/2 |
| Spares, general expenses, sundries . . . . . | | 11 1/2 |
| Total per acre . . . | 8 | 1 |

These annual costs amount to £300 for 750 acres, or 62.5 per cent of the price of the tractor.

For example, if a member's job has consumed 88 gallons of petrol, he pays the society the cost of 88 galls. plus 88 × 1*s* 10*d* = £ 8 1*s* 4*d*.

Taking the net cost of petrol at 2*s* 9*d* per gallon and supposing two ploughing jobs, one in light soil using 2.1 gallons per acre, the other in very heavy soil (5.3 gallons per acre), in each case the cost per acre will work out as follows:

| | Soil | | | |
|---|---|---|---|---|
| | Light | | Very heavy | |
| | *s* | *d* | *s* | *d* |
| Petrol used. . . . . | 7 | 3 1/2 | 14 | 7 |
| Surcharge . . . . . | 4 | 10 | 9 | 8 |
| Total . . . | 12 | 1 1/2 | £1 4 | 3 |

Accounts are thus easy to make out and the management is simpler, since it is only necessary to measure the petrol used.

1208 – **Dust Explosions and Fires in Grain Separators in the Pacific Northwest.** — PRICE J., in *United States Department of Agriculture, Bulletin*, No. 379. Washington, D. C., August 1916.

In a very detailed study, the writer examines in the first place the causes which have produced some 166 explosions from the middle of July to the end of September 1915. He then shows the means used for fighting these as well as the results obtained which were most conclusive.

A whole series of observations have made under the direction of the

Department of Agriculture during the summer of 1914 (1). The hypothesis of spontaneous combustion of smut-dust which was current at this time, lacks confirmation. It was abandoned in favour of the theory of static electricity. As at this date it was already suspected that the dust produced during threshing had been the cause of accidents, the Department of Agriculture towards the end of the 1914 season procured samples of smut-dust from threshing machines. This material proved to be extremely inflammable; it was necessary therefore to direct the investigation in this direction in order to solve the problem.

This important question was examined by a number of experts from the "Bureau of Chemistry", and from the "Office of Public Roads and Rural Engineering". In about 150 cases the investigators were on the scene at the time of the explosion or very soon after. In some cases the explosion was so sudden that the workmen could give very little information.

The accidents occurred most frequently from the end of July to the end of August; from 6 to 10 explosions each day were recorded during this period (2). From observations made in 128 different cases, the most critical time of the day is from 2 to 7 p. m. In 81 per cent of the cases the fires were put down to dust explosions; in the other cases the flame produced was small. Particular care was directed to the point of origin of the explosion or fire: in 82 out of 108 cases observed (76 per cent), it was behind the cylinder, or very close to it.

Two hypotheses have been put forward to explain the fires: (1) incendiarism; (2) natural causes.

The first hypothesis has been discarded. There only remains the second explanation and in 75 per cent of the cases the accident was attributed to static electricity and to explosions of dust from smutty wheat.

The threshing machines were of many different kinds: the power used does not seem to have any influence. In fact as many explosions occurred in machines driven by petrol motors as in those driven by steam. Out of 113 machines examined; 18 had petrol motors, 93 were driven by steam engines, 1 by an electric motor and 1 by horse power. Although the steam-driven machines were in a great majority, they were not subject to more frequent accidents, contrary to general opinion.

The speed of the machine, although sometimes excessive, does not seem to have any connection with the origin of the fire.

Out of 112 explosions, almost all of which occurred during threshing, the wheat contained from 1 to 35 % of smut. 15 % of the explosions occurred with dirty wheat. Only 3 explosions occurred with perfectly clean heads.

The question of hot axle-boxes as a cause of fire was examined with negative results.

(1) See *R.* 1915, No. 536.

(2) It was practically the same as in 1914.

The damage to the machines varied from slight derangement to total destruction. The total damage for all machines was $ 60 000.

In almost all cases the flame from the explosion was blown into the straw pile and sometimes spread to the grain in sacks. Several hundred acres of grain were thus destroyed, the loss amounting to about $ 50 000. Seventy-five per cent of the machines were provided with some form of fire-fighting equipment.

*Static electricity as a cause of explosions.* — It was evident from the beginning of the investigation that a large quantity of static electricity was generated during the operation of the threshing machine. The writer quotes a case in Idaho where a machine was completely destroyed as the result of an explosion. It was situated more than 15 miles from the railway and more than 4 miles from the main road. On the other hand the workmen were neighbours or men known to be reliable. The enquiry made it quite clear that the fire was due to static electricity (the weather was hot and dry). The wheat contained 31 % of smut.

In another case the owner of a threshing machine had his attention turned to the cylinder at the time of the explosion. He observed a long blue spark coincident with the explosion.

In one case the owner stated that his machine was very heavily charged with electricity on the morning of the explosion, to such an extent that that it was not possible to touch any metal part without shock, a condition which had never been noticed on this machine before. The explosion was violent and totally destroyed the machine.

*Mill explosions.* — The theory of dust explosions is not exactly new, and yet it is not generally believed that an explosion can occur in the absence of imflammable gas. But experiment has shown that dust produced by handling wheat can be ignited and cause serious explosions. The extremely fine state of division of the dust, combined with a sufficiently high temperature bring about the phenomenon. It has been shown in the laboratory of the University of Idaho that an electric spark can explode dust. Experiments made in the " Pittsburgh Testing Station of U. S. Bureau of Mines " indicate that to produce complete combustion of 0.12 oz. of coal dust requires all the oxygen in 1 cubic foot of air. Cereal smut dusts are very inflammable, more so than ordinary cereal dust. The explosions observed were of two different kinds : one quick and sharp and the other resembling a loud roar, lasting longer than the first and accompanied by more flame. The concussion produced by the original ignition shook the dust settled in the machine and gave rise to the explosion flame. The mixture of smut-dust and air may have limits of explosibility, and it is quite possible to have too much or too little dust present for an ignition. For this reason explosions may occur at a given time and under certain conditions and not occur at other times or under different conditions. These conclusions are drawn from the Pittsburg experiments mentioned above.

*Methods developed for preventing explosions or extinguishing fires.* — The writer described the investigations made on this point. The first method consisted of an arrangement of conducting wires connected to all the moving

*Extinguisher.*

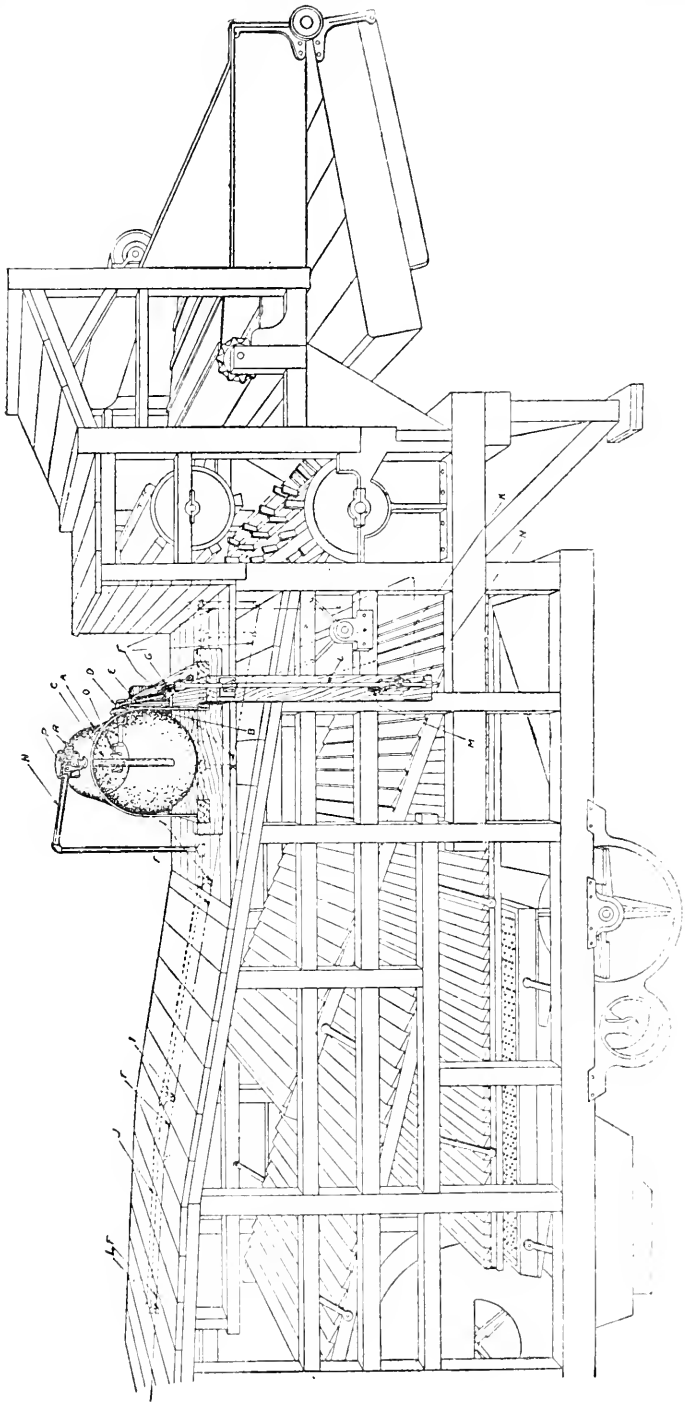

Automatic fire extinguisher fitted to a threshing machine.

parts to one part and from this part a single conductor is led to earth. This is a repetion of the 1914 experiment but considerably more points were connected to earth.

The second method used a suction fan in order to prevent the formation of an explosive mixture.

These two methods have been used with success on some machines whilst others which were not so fitted were burnt.

*Automatic fire extinguisher.* — As it was not possible to demonstrate that the above methods actually prevent explosions, the investigators decided to rely upon an automatic fire extinguisher which would afford protection irrespective of the cause of the fire. Such a device, illustrated in the figure given here, is composed of the following parts : a tank A mounted on top of the machine, contains a bottle C filled with sulphuric acid : a discharge pipe H ; a tripping mechanism composed of operating levers G and a main tripping lever L ; a trigger N ; discharge nozzles I ; and fuses F mounted in a wire line.

The tank is filled with a solution of carbonate of soda. In the discharge line between the tank and the machine may be mounted a three-way valve from which a hose connection may be made for extinguishing outside fires.

The apparatus works as follows: the presence of sufficient heat will melt one of the fuses F, break the line wire thus releasing the trigger which frees the tripping mechanism. This breaks the bottle containing the sulphuric acid which falls into the soda solution and sets free carbonic acid. This generates sufficient pressure to force the water through the discharge pipe and the nozzles to all the crevices of the separator. The position of the fuses will vary with each machine and must be selected so that they are sure to be reached by the flame or heat, but not so placed that the wire connecting them is likely to be broken by the straw or by the moving parts of the thresher.

A full size working model was constructed and tested in the explosion galleries of the Bureau of Mines at Pittsburgh, and 27 trials were made. In no case did the extinguisher fail to operate successfully. Four different types of threshing machines were tried at the Arlington Experimental Farm and in each case the fire was extinguished before any damage was done.

1209 – **Mechanism for Clutching and Declutching the Feed Device in Straw Balers.** — *Deutsche Landwirtschaftliche Presse*, 43rd year, No. 78 p. 634, 2 figures. Berlin, September 27, 1916.

In automatic straw-balers different mechanisms have to be put in or out of action from time to time, at fixed intervals, through the agency of parts driven with a regular rotary or reciprocating movement. The operations are usually effected by means of a toothed wheel fixed in the compression channel which after a certain number of turns, brings about the necessary clutching. Now, as this toothed wheel moves slowly, it cannot give a sudden movement; besides this requires a certain amount of power which the toothed wheel can only give partly or not at all.

These objections have induced WELGER Bros., of Seehausen (district

of Wanzleben, Germany), to design a motion (German patent No. 292442) which is released by the moving parts of the press, and at the right moment, by the toothed wheel. The latter does not perform the necessary work which is now done by the new piece of mechanism.

Figures 1 and 2 show the parts at two phases in the cycle of operations: the toothed wheel *a* turns a cam *b*, controlling a weighted trip *c* which, after

*Clutching and declutching mechanism.*

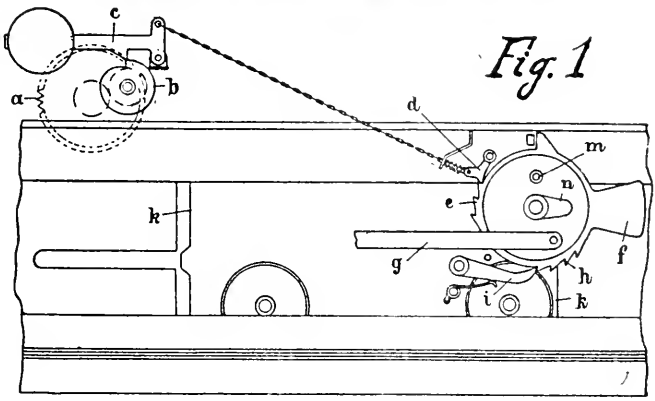


Fig. 1. — Clutching phase.

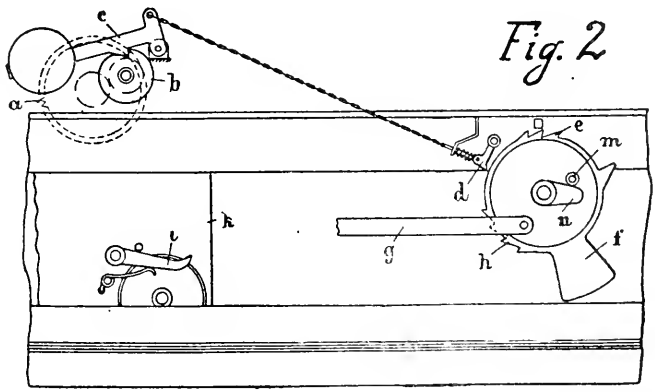


Fig. 2. — Declutching phase.

so many turns of the wheel *a* corresponding to the size of the bale, falls and thus releases the pawl *d* at the right moment; this in turn sets free a balance weight *f* furnished with ratchet teeth *e*, which passes from the position shown in fig. 1 to that in fig. 2, controlled by any suitable device, *e. g.* the pin *m* and the stop *n*. This movement is used to clutch and declutch through (say) the link *g*.

In order that the final position may be maintained for a certain time and, on the other hand, that the original position may easily be regained, the following arrangement is provided: the balance weight *f* is fitted with a second group of ratchet teeth *h* with which a pawl *i* engages; this pawl is linked to a part driven with a regular reciprocating motion, *e. g.* the compressor-ram *k*. At each blow of the ram, this pawl causes the balance weight disc to advance one tooth at a time up to the last of the teeth *h*. Then the movement of the pawl *i* ceases to take effect, and the pawl *d* keeps the balance weight in the raised position, as well as during the intervals in the ratchet action.

The cycle of movements begins again only after the toothed wheel *a* releases the pawl *d* in the way just described. Then the weight *f* falls when the ram retires to the left, and the pawl *i* leaves the teeth *h*.

## 1210 – Review of Patents.

*Tillage machines.*

| | | |
|---|---|---|
| Germany | 290 344 | Plough with harrowing device. |
| | 290 345 | Anchors for motor ploughs. |
| | 290 821 | Device for regulating the height of the chassis in motor ploughs. |
| | 291 093 | Device for fixing the depth of the furrows in double ploughs. |
| Austria | 69 469 | Device for regulating the height of the steering wheel in motor ploughs. |
| | 69 486 | Protective device for motor plough wheels. |
| | 29 490 | Device for repairing the mouldboards of ploughs after fracture. |
| | 69 624-70 454 | Motor ploughs. |
| Canada | 168 447 | Roller. |
| | 168 558 | Plough. |
| | 168 605-168 642 | Cultivators. |
| United States | 1 186 880 | Disc plough and cultivator. |
| | 1 187 310 | Control for cultivator chassis. |
| | 1 187 326 | Coulter and fixing device for disc harrows. |
| | 1 187 488 | Attachment for multi-furrow ploughs. |
| | 1 187 559 | Chassis for multi-furrow ploughs. |
| | 1 187 560-1 189 365 - 1 189 587 | Ploughs. |
| | 1 187 789 - 1 187 790 | Multi-furrow ploughs. |
| | 1 187 870 — 1 191 430 | Cultivators. |
| | 1 187 907 | Attachment for harrow. |
| | 1 188 184 — 1 188 431 | Attachment for ploughs. |
| France | 480 370 | Device suitable for motor ploughs and other multi-furrow machines. |
| United Kingdom | 480 424 | Soil cultivating machine. |
| | 5 328 — 6 305 — 8 564 — 100 612 | Ploughs. |
| | 486 | Harrow. |
| | 8 556 | Motor plough. |
| Holland | 1 480 | Strike plough for sugar cane plantations. |

*Drainage and irrigation.*

| | | |
|---|---|---|
| Germany | 291 153 | Irrigation system. |

*Manufacture and distribution of manures.*

| | | |
|---|---|---|
| United States | 1 187 953 — 1 187 954 — 1 188 725 — 1 189 658 — 1 191 670 | Manure spreaders. |
| France | 480 509 | Process for increasing the productiveness of the soil. |
| | 480 569 | New process for manufacture of compound manures. |
| United Kingdom | 5 487 | Manure distributors. |

*Drilling and planting machines.*

| | | |
|---|---|---|
| Germany | 290 049 | Potato planter with cellular disc having edges bent back externally. |
| | 290 133 | Drill or manure spreader with easily raised distributors. |
| | 290 567 | Drill with one lever controlling both the covering coulter and the distributors. |
| | 290 994 | Potato planter. |
| Austria | 70 261 | Device for emptying the hoppers of drills |
| | 70 393 | Potato planter. |
| United States | 1 186 632 — 1 186 954 | Drills. |
| | 1 189 019 | Corn drill. |
| | 1 189 358 | Potato planter. |
| Denmark | 21 348 | Potato planter. |

*Care of growing crops.*

| | | |
|---|---|---|
| Germany | 290 450 | Sulphuring process. |
| | 290 951 | Process for controlling disease in vines. |
| | 291 094 | Grafting tool for fruit trees. |
| Austria | 70 657 | Diaphragm pump for sprayer. |
| United States | 1 189 332 — 1 189 890 | Sprayers. |
| United Kingdom | 6 914 | Singling hoe for roots. |
| | 6 923 | Singling hoe for turnips. |

*Destruction of vermin.*

| | | |
|---|---|---|
| Germany | 290 610 | Process for destroying small rodents with powdered sulphur. |
| | 290 611 | Process for making insecticide. |
| Austria | 70 513 | Trap for musk rats (*Fiber Zibethicus*). |

*Harvesting machines.*

| | | |
|---|---|---|
| Austria | 69 982 | Guards for hay-tedders. |
| | 6 997 — 70 096 | Rakes. |
| Denmark | 21 364 | Mower. |
| | 21 398 | Binder. |
| United States | 1 188 190 — 1 188 210 | Horse rakes. |
| United Kingdom | 5 894 | Hay-lift. |
| | 6 768 | Hay-tedder. |
| | 8 242 | Horse rake. |

*Machines for harvesting roots.*

| | | |
|---|---|---|
| United States | 1 187 873 | Potato digger. |
| | 1 189 255 | Root puller. |
| | 1 191 355 | Beet puller and topper. |
| | 1 189 853 | Beet topper. |

| | | |
|---|---|---|
| France | 479 964 | Device for laying beets and other roots in rows after mechanical pulling. |

*Winnowing and threshing machines.*

| | | |
|---|---|---|
| Austria | 70 113 | Threshing machine with chaff extractor. |
| United States | 1 190 137 | Clover-gin. |
| | 1 191 853 | Threshing machine. |
| United Kingdom | 100 850 | Threshing machine. |

*Transport, dressing and storage of crops.*

| | | |
|---|---|---|
| Germany | 290 080 | Mangold and straw cutter. |
| | 290 568 | Device for removing dust from chaff and grain. |
| Austria | 70 380 | Installation for sulphuring hops. |
| | 70 382 | Hop drier with contiguous screens rocked in reverse directions. |
| | 79 813 | Chaff-cutter. |
| | 70 814 | Feed chain for chaff-cutter. |
| | 71 101 | Feed device for chaff-cutter. |
| Canada | 168 072 — 168 152 | Silos. |
| | 168 559 | Feed mechanism for silage cutter. |
| United States | 1 187 739 | Binder. |
| | 1 187 363 — 1 187 742 | Hay stacking machine. |

*Poultry farming.*

| | | |
|---|---|---|
| United Kingdom | 100 662 | Incubator. |

*Manufacture of vegetable products.*

| | | |
|---|---|---|
| Austria | 69 623 | Oven. |
| | 69 627 | Scraping device for kneading machine. |
| | 69 658 | Oven with moveable shelves. |
| Holland | 1 441 | Apparatus for clarifying juice from sugar cane. |
| | 1 458 | Process and apparatus for extracting juice from sugar cane and other sacchariferous plants. |

*Dairy industry.*

| | | |
|---|---|---|
| Germany | 291 284 | Butter making machine. |
| Austria | 69 488 | Control device for milking machine. |
| | 69 628 | Plate centrifuge. |
| | 69 829 | Device for filling and closing milk bottles. |
| Canada | 168 280 | Pulsator for milking machine. |
| | 168 400 | Pasteurising apparatus. |
| | 168 826 | Churn and butter maker. |
| Denmark | 21 315 | Device for milking machine. |
| France | 48 050 | Milking machine. |
| Holland | 1 092 | Improvements in teat-cup diaphragms in milking machines. |
| United Kingdom | 5 582 | Milking machine. |

*Steering and traction of farm machinery.*

| | | |
|---|---|---|
| Germany | 290 239 | Steering gear for drills and similar machines. |
| Austria | 70 807 | Plough tractor with steering wheel in front of driving wheel. |
| Canada | 168 223 — 168 224 — 168 439 | Tractors. |

United States 1 191 267 Steering gear for tractors.
1 191 817 — 1 191 853 — 1 191 423 Tractors.
United Kingdom 100 436 Tractor.

*Miscellaneous.*

Germany 291 095 Tool for making holes for square piles.
291 377 Rubber pad for horse-shoes.

FARM BUILDINGS.

1211 – **Portable Building.** — MAURIN G., in *Journal d'Agriculture pratique*, 80th Year, New Series, Vol. 29, No. 18 pp. 310-312, 2 figs. Paris, September 7, 1916.

The Gonot-Gorgeon portable building can be put to a great number of uses : stables, byres, shops, dwelling houses, etc. The writer describes the simplest type of temporary structure which can be erected in a few days with previously prepared material.

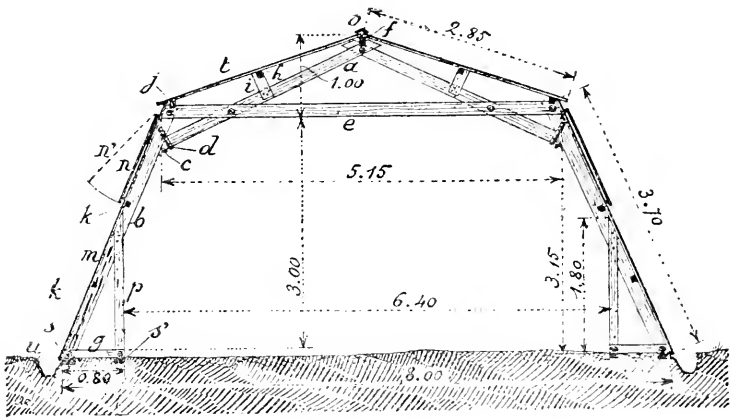


Portable building - Transverse section.

The truss is formed of two stout uprights *b*, each connected with a rafter *a*. by wrought iron straps *d* ; the foot of the rafter buts on a ledge *c* fixed to the upright *b*. Coupling bolts hold the uprights and the rafters *a*. The foot of the upright *b* is triangulated by a strut *p* and tied to the latter by coupling bolts *g* which are seated on the raising-piece *s*.

The structure is closed by wood panels with but-joints and internal cross-bars, those for the roof being 9 ft. × 3 ft. and those for the sides *m* 12 ft. × 3 ft. These panels are covered with tarred felt or similar material. The trusses are spaced 9.8 ft. from centre to centre.

The structure is very rigid and gives little hold to the wind. Rain water is discharged by two lateral drains *w*. The building can be floored and will last for some years, if treated every other year with a coat of tar and sand. A mixture of two parts of tar with one part of resin may also be used hot.

## RURAL ECONOMICS.

1212 – **The Sources of Farm Profits and Their Relative Importance.** — OTIS D. H.° and GUNN R. V., (Wisconsin College of Agriculture) in *Hoard's Dairyman*, Vol. LI, No. 23, pp. 900, 905, 918-821. Fort Atkinson, Wisc., June 30, 1916.

This report, presented at the third annual meeting of the Wisconsin State Farm Management Demonstration and Farm Contest, sums up the results of the third year's work in which nearly 1 300 farms have participated

As the majority of Wisconsin farmers grow four or five different crops and keep two or three classes of livestock it was necessary to find out how much each crop and each class of livestock contributes to the net results of the farm, in order to make a just award of the prizes given for farm management. The problem could only be solved indirectly, for the farmers had not kept detailed accounts but were only able to give, with any exactitude, the entries in their cash-books, showing the total receipts. No analysed figures were available as to the distribution of the expenses for labour, food, manures etc. The question has therefore been approached in the following indirect way :

Careful cost accounting records keps by different Wisconsin workers under the direction of O. A. Juve of the U. S. Department of Agriculture, the Minnesota bulletin on the cost of producing farm products, the investigations of former Wisconsin Agricultural students, and figures taken from the chief writers on rural economy, have all been consulted in order to arrive at a standard cost per crop per unit area, and per animal unit. This standard cost is the average for several farms for a series of years, so that extremes due to a good or bad year and a good or poor farm are avoided. The standard cost per unit for the various crops and classes of livestock has been worked out by the close and detailed analysis of available figures, and the results are given in Table I.

The profit per unit area for the different crops and the profit per animal unit for the various classes of beasts can be calculated by means of the standard cost per unit, being given the distribution of the crops of a farm and the number of beasts it carries, and also the gross yield for each crop and each class of beast.

This is illustrated in Table II. Column B shows the area devoted to each crop, and the number of beasts kept on the farm ; column C gives the total cost based on the standard cost per unit ; column D shows the percentage obtained by dividing the standard cost of each individual crop or class of live stock by the total standard cost ; column E shows the distribution of cost obtained by applying the percentage in column D to the total expenses ; column F gives the gross returns for each crop and each class of livestock ; column G shows the profit on each crop and class of livestock, obtained by subtracting the actual cost (E) from the gross returns (F) ; column H shows the average profit per acre for each crop and per animal unit for each class of livestock.

TABLE I. — *Standard or average cost of producing crops and keeping live stock.*

| Crops | | Live Stock | |
|---|---|---|---|
| Crop | Cost per acre | Class | Cost per animal unit |
| | $ | | $ |
| Barley | 14 | *Cattle kept by:* | |
| Corn | 18 | General dairyman | 75 |
| Oats | 13 | Pure-bred breeders | 100 |
| Peas | 20 | Market Milk Producers (Special) | 125 |
| Rye | 10 | Sheep (7 sheep or (14 lambs) | 75 |
| Wheat | 13 | Hogs (1 500 lbs) | 75 |
| Potatoes | 30 | Poultry (100 hens) | 75 |
| Alfalfa | 13 | | |
| Clover | 10 | | |
| Clover and Timothy | 9 | | |
| Silage | 25 | | |
| Pasture | 5 | | |

TABLE II. — *Application of method of using standard costs to determine the actual costs on an individual farm.*

| *A* Crop or class of livestock | *B* Acres or Units | *C* Standard Cost | *D* Per cent expense | *E* Actual Cost | *F* Income | *G* Profit | *H* Profit per acre or unit |
|---|---|---|---|---|---|---|---|
| | | $ | | $ | $ | $ | $ |
| Barley | 4 | 56 | 1.3 | 52 | 131 | 79 | 19.70 |
| Oats | 17 | 221 | 5.1 | 204 | 327 | 123 | 7.23 |
| Alfalfa | 17 | 221 | 5.1 | 204 | 525 | 321 | 18.88 |
| Clover | 12 | 120 | 2.7 | 108 | 350 | 242 | 20.10 |
| Clover and Timothy | 20 | 180 | 4.1 | 164 | 420 | 256 | 12.80 |
| Silage | 17 | 425 | 9.7 | 389 | 472 | 83 | 4.55 |
| Pasture | 54 25 | 273 | 6.2 | 248 | 248 | — | — |
| Cattle | 26.75 | 2 675 | 61.2 | 2 452 | 3 658 | 1 206 | 45.00 |
| Hogs | 2.7 | 199 | 4 6 | 184 | 282 | 98 | 36.30 |
| Total | — | 4 370 | 100 | 4 005 | 6 413 | 2 458 | — |

TABLE III. — *Standard and actual costs compared; average of 25 farms in Barron County.*

| | No. farms averaged | Standard cost per farm | Actual cost per farm |
|---|---|---|---|
| *Crops.* | | $ | $ |
| Barley | 16 | 109 | 110 |
| Oats | 25 | 204 | 211 |
| Peas | 2 | 360 | 419 |
| Rye | 6 | 44 | 46 |
| Wheat | 6 | 39 | 50 |
| Potatoes | 9 | 246 | 243 |
| Alfalfa | 8 | 23 | 21 |
| Clover | 15 | 110 | 129 |
| Clover and Timothy | 17 | 169 | 170 |
| Silage | 20 | 385 | 391 |
| Pasture | 25 | 236 | 249 |
| *Livestock.* | | | |
| Cattle | 25 | 1 552 | 1 627 |
| Sheep | 2 | 457 | 427 |
| Hogs | 22 | 228 | 217 |
| Total expense per farm | | 2 976 | 3 095 |

TABLE IV. — *Relative profitableness of different farm crops.*

| *A* Crop | *B* No. of farms averaged | *C* Acres per farm | *D* Profit per farm | *E* Profits per farm |
|---|---|---|---|---|
| | | | $ | $ |
| Barley | 41 | 8.7 | 67.58 | 7.74 |
| Corn | 34 | 12.3 | 28.18 | 2.28 |
| Oats | 72 | 18.4 | 114.45 | 6.21 |
| Peas | 2 | 18 | 370.00 | 20.55 |
| Rye | 13 | 7.7 | 43.54 | 5.64 |
| Wheat | 16 | .62 | 13.44 | 3.70 |
| Potatoes | 10 | 8.5 | 186.86 | 21.88 |
| Alfalfa | 46 | 9.76 | 224.15 | 22.95 |
| Clover | 46 | 11.74 | 194.45 | 16.55 |
| Mixed hay | 58 | 17.14 | 152.53 | 9.37 |
| Silage | 65 | 19.43 | — 58.64 | — 3.92 |
| Pasture | 75 | 43.4 | — | — |

In order to obtain a standard, this method was applied to a group of 25 farms, the resulting figures being given in Table III ; it is obvious that in the average figures for the 25 farms there is a remarkable agreement between the standard expense calculated according to Table I and the actual expense obtained by applying the percentage figures to the total cost credited to each farm.

The average results on 78 farms divided into four different groups according to their size, show the same general tendencies and the same relative profitableness of each crop that was indicated in Table III. The averages for the four groups are given in Table IV.

The same method was applied to the study of the livestock situation, 58 farms being considered, divided into three groups according to the cattle units they possessed. The results are indicated in Table V.

TABLE V. — *Relative profitableness of livestock on 58 farms.*

| | | Number of farms | Units of livestock per farm | Profit or Loss per farm | Profit or loss per unit of livestock |
|---|---|---|---|---|---|
| | | | | $ | $ |
| Group I 25 farms | Cattle . . . . . | 25 | 19.6 | — 410 | — 20.95 |
| | Sheep . . . . . | 3 | 6.1 | — 68 | — 11.04 |
| | Hogs . . . . . | 22 | 2.8 | 48 | 16.52 |
| Group II 18 farms | Cattle . . . . . | 18 | 26.6 | — 417 | — 15.63 |
| | Sheep . . . . . | 3 | 3.2 | — 101 | — 31.56 |
| | Hogs . . . . . | 15 | 4.4 | — 49 | — 11.11 |
| Group III 15 farms | Cattle . . . . . | 15 | 38.6 | 1 146 | 29.64 |
| | Sheep . . . . . | — | — | — | — |
| | Hogs . . . . . | 6 | 2.25 | 44 | 19.55 |

On the 25 farms of group I only 3 are making a profit, while on 22 the livestock is kept at a loss in spite of the profit on the hogs. This is explained by the low production of the milking cows, which is only valued at 58 per cow. If the method of analysis is correct the profit of this group of farms is made on the crops and not on the livestock with the exception of hogs.

On the farms of group II the hogs were raised at a loss relative to the value of food consumed, while in group III a profit was realised both on milking cows and hogs.

For the purpose of comparison, calculations have been made of the returns for the food consumed in the 3 groups, the average of individual production for each milking cow and the receipts per animal unit. The

figures in Table VI explain the causes which influenced the results set forth in Table V.

TABLE VI. — *Returns for feed consumed.*

| | Group I | Group II | Group III |
|---|---|---|---|
| | $ | $ | $ |
| Value of feed fed | 1 280 | 1 424 | 3 311 |
| Returns per $ 1 of feed fed | 1.17 | .87 | 2.04 |
| Receipts per cowdairy products | 58 | 62 | 114 |
| Receipts per animal unit | 65 | 45 | 173 |
| Profits per animal unit | — 16 | — 18 | 30 |

The receipts from crops, livestock and from miscellaneous sources, with the corresponding profits are shown in Table VII.

TABLE VII. — *Total receipts and net profits per farm.*

| Receipts and profits per farm | Group I | Group II | Group III |
|---|---|---|---|
| | $ | $ | $ |
| Total receipts | 3 265 | 2 867 | 9 741 |
| Crops | 1 619 | 1 359 | 2 685 |
| Livestock | 1 493 | 1 380 | 6 773 |
| Miscellaneous | 153 | 128 | 308 |
| Net profits | 174 | 405 | 2 086 |
| Crops | 399 | 42 | 617 |
| Livestock | — 378 | — 575 | 1 161 |
| Miscellaneous | 158 | 128 | 1 308 |

The third year's work concluded with the announcement of these results, visits to the farms and the award of the prizes gained. In the future much more exact information will be available. Prior to 1915 the records were obtained by the survey method by which the farmer is asked a series of questions, many of the answers to which must be estimates. In 1916, out of the 600 farmers interested in the work 365 kept their books in a satisfactory manner. For the coming year 1917 over 800 farmers have promised to keep their records.

Also, in 6 counties executive committees have been formed to organise the work of farm management work in their respective counties. The farmers themselves are so interested in the movement that the best results may be expected, and it is possible that in the near future they will contribute financially to defray expenses and to aid in the extension of this demonstration work.

1213 – **Statistical Researches on the Chief Factors Which Influence Farm Profit in Denmark.** — NANNESON L., in *Dansk Land*, Year IV, pp. 35-53. Copenhagen, February 1916.

These statistical researches are based on data collected by the Office for Agricultural Accounts at Malmøhus (Malmøhus Lens Bogføringsforening).

The economic result of agricultural enterprise may be considered in various ways, depending upon whether the type of enterprise be of a capitalist nature or merely seeks to find a useful outlet for labour, as on the farms of the peasant proprietors. The wage value for the work done gives an index of the profit-making capacity of farms under peasant proprietors, and a comparison is made with the interest on capital on other types of farms. The statistical method is used for making this comparison in order to bring out clearly the factors by which farm profits are influenced.

*Farms under peasant proprietors.* — Data were obtained from 14 farms and a calculation has been made of the value of the labour of the owner's family after deducting a fair interest on the capital laid out (at 4 ½ per cent for capital invested in land and 6 per cent for working capital) from the returns for the work done. Value for work done is compared with the normal wage value, calculated on the scale of the wage of the local labourers. This is set out in Table I, which also gives the net profit per acre and the rate of interest on capital obtained on each farm.

The large differences in the net profit per acre are accentuated in the rate of interest because of the different amounts of capital invested per acre. The rate of interest fluctuates from a minimum of 0.2 per cent to a maximum of 9.4 per cent, averaging 4.9 per cent for the 14 farms. Consequently there are equally big differences in the wages earned by the owner's family, which vary from 47.5 per cent to 144.2 per cent of the normal wages, averaging 99.7 per cent. On account of these large variations, the farms have been divided into two groups according to the interest yielded in order to find out by what factors the profit-making capacity is determined. The factors for the two groups of farms are compared in Table II. In the first group the gross return from livestock is much greater than in the second, the return from cows and pigs being double, and that from other stock being more than double. In spite of their less favourable economic emplacement the farms of group I have given an increased net return of 44s per acre, so that the interest in group I is 7.2 per cent and in group II is only 2.2 per cent. The value of the work done on the farms of group I is double that in group II, although the working expenses are almost the same in both groups. It appears, therefore, that intensive cattle rearing is the most profitable way of employing labour on the

TABLE I. — *Value of work done on the farms of the peasant proprietors.*

| Farm | Net profit per acre | | | Rate of interest on capital invested | Return for work done by the owner's family | | | | |
|---|---|---|---|---|---|---|---|---|---|
| | | | | | Calculated according to local wages | | Actually obtained after deducting interest on capital | | Actually obtained in percentage of local wages |
| | £ | s | d | per cent | £ | s | £ | s | |
| 42 | | 6 | 6 | 0,9 | 55 | 18 | 34 | 16 | 62,2 |
| 43 | 4 | 8 | 0 | 5,7 | 33 | 11 | 37 | 7 | 113,3 |
| 44 | | 15 | 5 | 1,2 | 55 | 18 | 32 | 4 | 57,6 |
| 45 | 2 | 15 | 0 | 8,6 | 67 | 2 | 94 | 8 | 140,7 |
| 46 | 2 | 15 | 6 | 5,0 | 55 | 18 | 56 | 12 | 101,2 |
| 47 | 3 | 6 | 6 | 7,9 | 55 | 18 | 66 | 16 | 119,5 |
| 48 | 3 | 6 | 6 | 6,0 | 67 | 2 | 76 | 6 | 113,8 |
| 49 | — | 1 | 6 | — 0,2 | 44 | 14 | 21 | 5 | 47,5 |
| 50 | 2 | 13 | 6 | 4,2 | 55 | 18 | 46 | 15 | 83,6 |
| 51 | | 6 | 6 | 0,5 | 33 | 11 | 6 | 11 | 19,5 |
| 52 | 1 | 10 | 6 | 4,2 | 55 | 18 | 51 | 19 | 92,9 |
| 53 | 2 | 18 | 6 | 6,4 | 67 | 2 | 80 | 12 | 120,2 |
| 54 | 3 | 9 | 9 | 6,6 | 61 | 10 | 106 | 12 | 117,8 |
| 55 | 3 | 7 | 6 | 9,4 | 67 | 2 | 96 | 16 | 144,2 |

farms of the peasant proprietors, and that if this method be not practised it is impossible to realise the normal returns on work and capital.

The lower profit-making capacity of the second group is partly due to the smaller area of the farms which average 2.75 acres less; if the farms are grouped according to area, the difference is less marked.

| Area of farms | Net profit per acre | | Rate of interest |
|---|---|---|---|
| | s | d | per cent |
| Up to 10 acres . . . . . | 42 | 6 | 3.8 |
| From 12.5 to 25 acres . . . . . | 48 | 6 | 5.7 |

In relation to the area, the value of the buildings was much greater in the first group than in the second but the number of farms studied is not great enough to allow of any general conclusion being drawn.

*Other farms.* — The diagram on page 1672 relates to capitalist farms and illustrates the statistics from 72 farms, which are arranged from left to right in dimi-nishing order of the rate of interest they yield.

It appears from this diagram that there are great differences in organisation and intensity of working even on farms which give the same net re-

TABLE II. — *Figures relating to the farms of the peasant-proprietors, Farms arranged in two groups according to the rate of interest yielded.*

| | More profitable group | Less profitable group | Difference |
|---|---|---|---|
| Average area | 15.75 ac. | 13 ac. | + 2.75 ac. |
| Economic emplacement | 3.0 | 3.4 | — 0.4 |
| Class of productivity | 3.1 | 2.6 | + 0.5 |
| Capital invested per acre | £35 8s | £40 7s | — £4 19s |
| Working capital » » | £14 | £8 12s | + £5 8s |
| Gross return from milking stock | £5 13s | £2 17s | + £2 14s |
| Gross return from pigs | £3 17s | £2 4s | + £1 13s |
| Gross return from other livestock | £1 18s | £0 16s | + £1 2s |
| Total gross return per acre | £13 16s | £11 7s | + £2 10s |
| Cost of labour per acre | £5 0s | £5 1s | — £0 1s |
| Cost of concentrated foods per acre | £2 17s | £1 18s | + £0 19s |
| Total working expenses per acre | £10 9s | £10 3s | + £0 6s |
| Net profit per acre | £3 8s | £1 4s | + £2 4s |
| Rate of interest on capital invested | 7.2 per cent | 2.2 per cent | + 5.0 per cent |
| Return for work done | £30 | £14 6s | + £15 14s |
| Return for work done in percentage of normal wages | 125.3 per cent | 69,0 per cent | + 56.3 p. cent |

TABLE III — *Farms grouped according to the date of interest yielded*

| Group | Rate of interest | Capital invested per acre | Gross return per acre | Cost of labour | | Working expenses less interest per acre | Net return per acre | Per cent of total yield | | Economic emplacement |
|---|---|---|---|---|---|---|---|---|---|---|
| | | | | per acre | per cent of gross return | | | from crops | from stock | |
| | per cent | £ s | £ s | £ s | | £ s | £ s | | | |
| I | 8.9 | 51 19 | 13 6 | 3 7 | 25.4 | 8 14 | 4 12 | 55 % | 31 % | 4,30 |
| II | 7.0 | 54 9 | 12 11 | 3 8 | 27.1 | 8 15 | 3 16 | 52 | 30 | 4,15 |
| III | 6.1 | 53 6 | 11 8 | 3 3 | 27.6 | 8 3 | 3 6 | 47 | 32 | 3,85 |
| IV | 5.4 | 57 6 | 11 6 | 3 3 | 28.1 | 8 6 | 3 1 | 46 | 30 | 4,00 |
| V | 4.2 | 53 4 | 10 8 | 3 6 | 32.0 | 8 4 | 2 5 | 51 | 29 | 4,00 |
| VI | 3.1 | 53 19 | 9 13 | 3 1 | 31.8 | 8 1 | 1 13 | 47 | 31 | 4,00 |
| VII | 0.8 | 49 14 | 8 12 | 3 6 | 38.3 | 7 19 | 13 | 42 | 36 | 3,70 |

TABLE IV — *Returns from the different groups of farms, arranged according to the intensity of cultivation.*

| Group | Working expenses + interest per acre | Net profit per acre | Rate of interest | Economic Emplacement | Percentage of farms yielding an interest of more than 4 per cent |
|---|---|---|---|---|---|
| | s d | s d | per cent | | per cent |
| I | 264 0 | 56 0 | 5.26 | 4.15 | 80 |
| II | 242 6 | 60 0 | 5.60 | 4.08 | 75 |
| III | 223 0 | 60 6 | 5.50 | 4.05 | 65 |
| IV | 206 4 | 59 6 | 5.77 | 4.05 | 70 |
| V | 193 6 | 55 5 | 4.56 | 4.05 | 65 |
| VI | 147 1 | 26 0 | 3.15 | 3.61 | 45 |

TABLE V. — *Returns from the different groups of farms, arranged according to the percentage of total returns that is derived from crops.*

| Group | Percentage of total returns yielded by crops | Net profit per acre | Rate of profit | Economic emplacement | Productivity of cereal crops | Percentage of farms yielding a profit of more than 4 per cent |
|---|---|---|---|---|---|---|
| | | s d | per cent | | point | |
| I | 60.2 | 66 0 | 6.51 | 3.95 | 3.82 | 80 |
| II | 53.5 | 65 | 6.17 | 4.05 | 3.91 | 80 |
| III | 50.5 | 48 | 4.62 | 4.10 | 3.83 | 60 |
| IV | 46.8 | 49 0 | 4.93 | 4.02 | 3.80 | 55 |
| V | 42.9 | 51 | 4.35 | 3.90 | 3.58 | 60 |
| IV | 37.9 | 45 0 | 3.82 | 3.97 | 3.41 | 50 |

turn. This is particularly noticeable on the two farms which yield the largest profit On farm No. 2, the gross return per acre was 75*s* higher than that on farm No. 1, while the cost of labour was 31*s* per acre more. On farm No. 2 the crops provided 80 per cent of the total yield, whereas in No. 1 they only made up 55 per cent. As such different methods of organisation give similar economic results it is very difficult to specify the best types of farm for a given district, and any classification that is attempted is open to criticism. Nevertheless it is clearly evident from the diagram that the gross return per acre decreases with the profit-making capacity. This is shown still more clearly by the average figures for groups of 10 farms, given in Table III, where the gross return per acre falls from £ 13 6*s* in group I to £ 8 12 *s* in group VII. This proves that the lower profit-making capacity is directly connected with the lower production per unit area. Comparing the best group with the worst the net return per acre fell from £ 4 12*s* to

DIAGRAM. — *Economic results from 72 farms.*

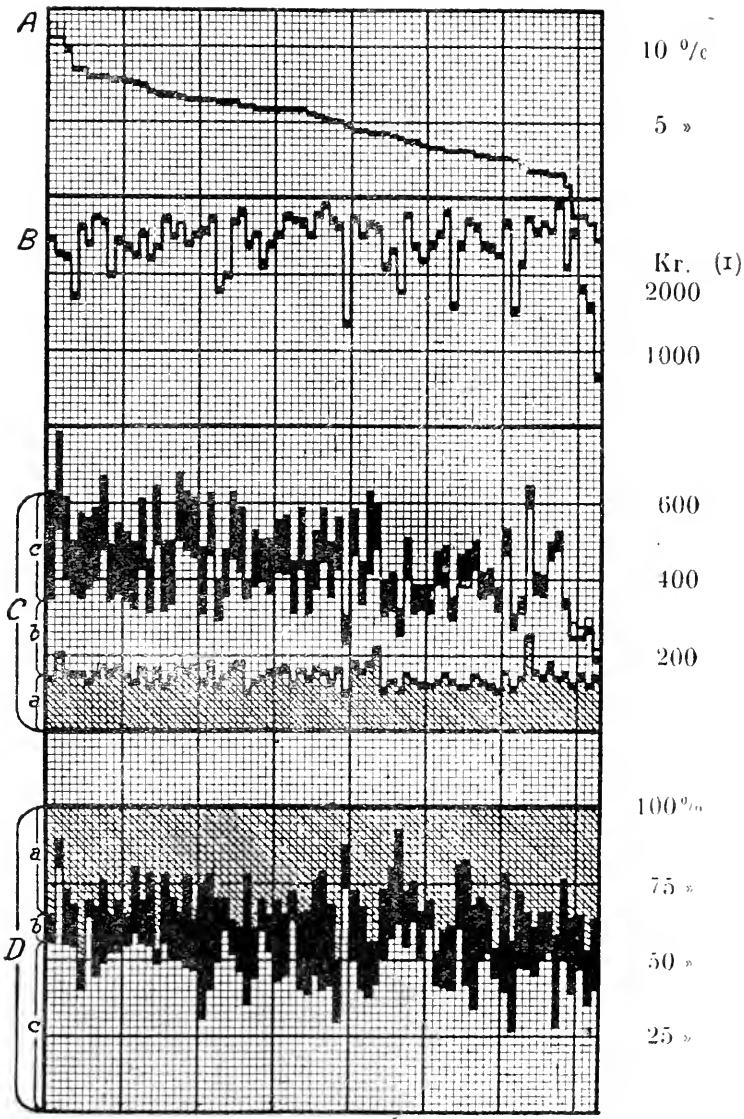


*A*. Rate of interest, per cent.
*B*. Capital invested per acre.
*C*. Gross returns : *a*) cost of labour
*b*) other working expenses
*c*) net profit per acre.
*D*. Percentage of gross returns derived from : *a*) cattle
*b*) various products
*c*) crops.

(1) 1 krone (Danish) = 1*s*. 2*d*.

TABLE VI. — *Returns from the different groups of farms, arranged according to the percentage of total returns that is derived from livestock.*

| Group | Percentage of total return yielded by livestock | Net profit per acre | | Rate of interest | Economic emplacement | Productivity: quantity of milk per cow (1 point = 264 galls) | Percentage of farms yielding a profit of more than 4 per cent |
|---|---|---|---|---|---|---|---|
| | | *s* | *d* | per cent | | points | |
| I | 42.8 | 44 | 6 | 3.81 | 3.95 | 4.25 | 50 |
| II | 36.9 | 48 | 0 | 4.06 | 3.97 | 4.15 | 50 |
| III | 33.8 | 54 | 0 | 4.95 | 4.20 | 4.15 | 60 |
| IV | 31.2 | 55 | 6 | 5.37 | 3.97 | 4.00 | 70 |
| V | 27.6 | 58 | 6 | 5.56 | 3.88 | 3.95 | 75 |
| VI | 22.0 | 59 | 6 | 5.54 | 3.97 | 3.75 | 75 |

13*s*, but the corresponding reduction in working expenses was only 15*s*. This explains why the rate of interest was only 0.8 per cent in the worst group, while it was 8.9 per cent in the best. The crops provide 55 per cent of the total yield in the best group of farms, and only 42 per cent in the worst, while the livestock represent 31 per cent and 36 per cent respectively.

*Cost of labour.* — The cost of labour per acre does not vary much in the groups of farms, the greatest difference being only about 1*s* per acre. On the other hand, when compared with the gross return the labour expenses rise from 25 per cent in the group giving the greatest yield to 38.3 per cent in the group giving the lowest yield. It is therefore clear that the great *relative* increase in the cost of labour is one of the chief causes of the poor economic results of the worst group of farms. This point has not been sufficiently considered in studying the economy of farming, and it deserves special attention particularily when the cost of labour is high. Low economic results depend chiefly on excessive labour expenses in comparison with the return per unit area. The profits, both for crops and livestock, are much too low, and the reason can only be that the work is not properly looked after, so that the labourers become slack.

*Relation between profit and intensity of cultivation.* — The intensity of cultivation of a farm is indicated by the cost of labour and working expenses together with the interest on the land, *i. e.* by the total cost of production. The farms have been arranged in order on this basis, and have then been grouped in such a way that extra-ordinary factors have been eliminated as far as possible. In Table IV group I comprises the first 20 farms, group II contains No. 11 to No. 30, group III No. 21 to No 40 and so on. The two groups with the lowest intensity of cultivation give the poorest results, but the rate of interest reaches its maximum when the cost of production is about £ 10 6*s* per acre, and decreases when this limit is passed, showing that the increase of intensity of cultivation beyond a certain point is not advisable.

*Relation between profit and the relative proportion of crops and livestock.* — In Table V the farms are grouped in descending order according to the percentage of the total yields given by the crops, and in Table VI according to the percentage of the total yields given by the livestock.

Increase in the percentage of crops sold is nearly always followed by increased profit, and there is no indication that a limit has been reached beyond which it would be disadvantageous to pass, but this is not the case with animal products. Two groups have been formed in order to study the second factor which affects the profits ; in group I the profit exceeds 5 per cent., in group II it is less than 5 per cent. Only those farms have been considered in which the return from livestock exceeds 35 per cent of the total return and the chief factors bearing upon milk production have been isolated as follows :

| | Group A | Group B |
|---|---|---|
| Number of farms . . . . . | 10 | 12 |
| Rate of interest . . . . . | 6.4 per cent | 6.4 per cent |
| Economic emplacement . . . . . | 4.2 points | 3.8 points |
| Value of milk per gallon . . . . | $5\frac{3}{4}$ *d* | $5\frac{1}{2}$ *d* |
| Degree of productivity *i.e.* quantity of milk per cow, in points (1 point = 264 galls). . . . . | 4.3 points | 3.8 points |
| Gross return per £100 invested in livestock . . . . . | £125 18*s* | £93 2*s* |

While the farms in group A yield a profit of 6.4 per cent, those in group B yield only 1.4 per cent. This is due to various causes : in group A the milk is worth ¼ *d* per gallon more than it is in group B, while the production of milk per cow is 132 gallons higher ; also the gross return from the livestock is 125.9 per cent in group A, but only 93.1 per cent in group B, the working oxen being about the same in both groups.

*Relation between profits and the relative area under the various crops.* — The percentage of the total area occupied by cereals, forage crops (green forage, roots etc.) and industrial crops (sugar beet, potatoes for distilling etc.) has been calculated for most of the farms studied. In Table VII the farm are grouped in descending order according to the percentage of the total area occupied by each of the three classes of crops.

The greatest profits are made by the groups of farms having 53 per cent of their area under cereals or 27.2 per cent under forage crops. If this optimum is exceeded or not reached the rate of interest decreases until a minimum is reached on those farms growing the largest proportion of forage crops and the smallest proportion of cereals. Increase in the area devoted to industrial crops causes the rate of interest to increase steadily, and the maximum profit does not seem to have been reached even in the first group of 10 farms which have 20.2 per cent of their area under these crops. The extension of industrial crops seems to have a direct bearing upon the economic value of the " emplacement " which is a very important factor that must not be lost sight of in considering each group.

TABLE VII. — *Returns from the different groups of farms, arranged according to the percentage of the total area devoted to cereals, forage plants and industrial crops respectively.*

| Group | Percentage of total area | Net profit per acre | Rate of interest | Economic emplacement | Productivity | Percentage of farms yielding an interest of more than 4 per cent | Percentage of total area devoted to industrial crops |
|---|---|---|---|---|---|---|---|
| | | s d | per cent | | points | | |
| A. *Cereals.* | | | | | | | |
| I . . . . . | 59,0 | 52,6 | 4,68 | 4,0 | 3,6 | 65 | 12,5 |
| II . . . . . | 55,9 | 51,0 | 4,61 | 3,9 | 3,5 | 65 | 12,7 |
| III . . . . . | 53,4 | 54,6 | 5,25 | 4,0 | 3,6 | 65 | 13,4 |
| IV . . . . . | 50,8 | 55,0 | 5,12 | 4,2 | 3,8 | 60 | 14,0 |
| V . . . . . | 45,7 | 49,0 | 4,48 | 3,9 | 3,8 | 55 | 15,1 |
| VI . . . . . | 42,1 | 43,6 | 4,00 | 3,7 | 3,7 | 50 | 14,5 |
| B. *Forage plants.* | | | | | | | |
| I . . . . . | 41,6 | 43,0 | 4,15 | 3,9 | 3,8 | 50 | 11,6 |
| II . . . . . | 35,9 | 53,6 | 5,00 | 3,9 | 3,9 | 65 | 14,1 |
| III . . . . . | 32,8 | 51,0 | 4,50 | 4,0 | 3,7 | 65 | 13,7 |
| IV . . . . . | 30,6 | 52,6 | 4,50 | 3,9 | 3,5 | 60 | 13,2 |
| V . . . . . | 27,2 | 58,6 | 5,55 | 4,1 | 3,7 | 70 | 14,8 |
| VI . . . . . | 23,5 | 56,0 | 5,30 | 3,9 | 3,8 | 65 | 15,8 |
| C. *Industrial Crops.* | | | | | | | |
| I . . . . . | 20,2 | 67,0 | 6,53 | 4,2 | 4,1 | 80 | — |
| II . . . . . | 19,8 | 63,6 | 6,27 | 4,1 | 3,9 | 75 | — |
| III . . . . . | 16,7 | 64,0 | 5,95 | 4,0 | 3,9 | 80 | — |
| VI . . . . . | 14,0 | 54,5 | 4,76 | 4,0 | 3,8 | 65 | — |
| V . . . . . | 12,1 | 42,0 | 3,71 | 4,1 | 3,6 | 50 | — |
| VI . . . . . | 9,8 | 40,5 | 3,69 | 3,7 | 3,4 | 50 | — |

Generally speaking, the lower profit obtained when smaller areas are devoted to industrial crops must be attributed to the lower economic value of the emplacement and to the low productivity of the soil. High profits are also obtained in some of the groups in which the areas devoted to the definite crops are far below the maximum limits. This emphasises the necessity of studying the economics of various combinations of crops on more abundant statistical data than the author has used in these researches, because when the number of farms in each group is relatively small the influence of extraordinary factors does not permit of general conclusions being drawn.

TABLE VIII. — *Returns from the different groups of farms, arranged according to the percentage of the total area devoted to cereal crops.*

| Group | Percentage of the total area devoted to cereals | Net profit per acre | Rate of profit | Economic emplacement | Productivity | Percentage of farms yielding a profit of more than 4 per cent | Percentage of total area devoted to industrial crops |
|---|---|---|---|---|---|---|---|
| | | s | | | Points | | |
| I | 30.4 | 54 | 5.40 | 4.1 | 3.5 | 70 | 13.8 |
| II | 27.9 | 64 | 5.70 | 0.1 | 4.2 | 80 | 13.9 |
| III | 24.0 | 63 | 5.70 | 4.1 | 4.1 | 75 | 14.2 |
| IV | 21.7 | 60 | 5.35 | 4.1 | 3.9 | 65 | 14.8 |
| V | 19.7 | 45 | 5.25 | 4.1 | 3.6 | 55 | 13.6 |
| VI | 15.9 | 39 | 3.88 | 3.7 | 3.3 | 50 | 13.3 |

In Table VIII the farms are grouped according to the areas devoted to bread-making cereals (chiefly wheat). The rate of interest increases through the different groups to a maximum in group II (where cereals occupy 27.9 per cent of the total area), and diminishes again in group I, probably because the productivity points are low, owing to three farms which have an excessively low output apart from the cereals they produce. If these three farms are eliminated, group I with the largest area under wheat (31 per cent) gives the greatest rate of interest (6.8 per cent.) This shows that farms which arrange their land properly find the extension of wheat growing an excellent means of increasing their profit, particularly as in 1913, the year which provided the data on which there researches are based, the profit from wheat was somewhat decreased by the specially low selling price.

1214 – **The "Mougharsa" Form of Contract in Northern Africa.** — See this *Bulletin* No. 1161.

## AGRICULTURAL INDUSTRIES.

INDUSTRIES DEPENDING ON PLANT PRODUCTS

1215. – **Sulphurous Acid in Chemical Combination in Musts and Wines.** — LABORDE, in *Revue de Viticulture*, Vol. XLIV, Nos. 1139, 1143, 1146, 1147, 1148; pp. 300-314, 373-376, 421-423, 437-440, 453-459; Vol. XLV, No. 1152, pp. 53-57. Paris, April 27, May 25, June 15, 22 and 29, and July 27, 1916.

Analysis proves that sulphurous acid which has been added to musts and wines exists both in the free state, that is merely dissolved, and also in chemical combination with the various constituents of these liquids. The difference between these two states is shewn very clearly by the iodine test, and it is very important from a physiological point of view.

Sulphurous acid has when free a very strong antiseptic action on wine yeast, which it loses almost entirely when chemically combined. There is

the same difference between the two states as regards harmful properties when imbibed, and the regulations concerning the addition of sulphurous acid to fermented drinks have been made with this in mind.

All compounds formed by sulphurous acid in grape must or wine are unstable. They can be destroyed, and the sulphur dioxide completely expelled by heating the liquids to boiling.

The following points have been examined:

I. — THE CHEMICAL COMBINATION OF SULPHUROUS ACID WHEN ADDED TO GRAPE MUST. — The most important ingredient of musts which combines with sulphurous acid is the sugar, a mixture of glucose and fructose.

X. ROCQUES shewed some time ago that though saccharose does not combine with sulphurous acid, yet invert sugar combines very easily with it in aqueous solution, 1 gm. of sugar absorbing about 1 mgm. of it. This proportion is low, but can vary considerably.

Glucose and fructose were compared as regards their power of combining with sulphurous acid. Two solutions of 100 and 200 gms. per litre of invert sugar and a 10 per cent solution of glucose were prepared by allowing invertase from yeast juice to act at a temperature of 40° C. on solutions of saccharose. Other 10 per cent and 20 per cent solutions of invert sugar and 10 per cent solution of glucose were also made by dissolving saccharose in a 0.3 per cent solution of hydrochloric acid at a temperature of 80° C. On all these solutions, obtained by two methods, the effect was tried of adding 1 mgm. and 2 mgms of sulphur dioxide.

The results obtained after letting the solutions stand for 48 hours, all air being excluded, are given in Table I.

TABLE I. — *Combination of sulphur dioxide with glucose and invert sugar.*

| Sulphur dioxide | | 10 per cent glucose solution | | | | 10 per cent invert sugar soluliou | | | | 20 per cent invert sugar solution | | | |
|---|---|---|---|---|---|---|---|---|---|---|---|---|---|
| | | From yeast juice | | From acid | | From yeast juice | | From acid | | From yeast juice | | From acid | |
| | | | % | | % | | % | | % | | % | | % |
| 1) 100 mgms. | total . . | 96 | — | 100 | — | 100 | — | 100 | — | 102 | — | 100 | — |
| | free . . . | 54 | (56.2) | 65 | (65) | 76 | (76) | 54 | (54) | 59 | (57.8) | 22 | (22) |
| | combined | 42 | (43.7) | 35 | (35) | 24 | (24) | 46 | (46) | 43 | (42.1) | 78 | (78) |
| 2) 200 mgms. | total . . | 216 | — | 205 | — | 200 | — | 210 | — | 216 | — | 202 | — |
| | free . . . | 104 | (48.2) | 140 | (68) | 149 | (75) | 144 | (68.6) | 126 | (58) | 65 | (32) |
| | combined | 112 | (51.8) | 65 | (31) | 51 | (25) | 66 | (31.4) | 90 | (42) | 137 | (68 |

From this experiment the following conclusions may be deduced:

Solutions of invert sugar and solutions of glucose prepared by yeast juice combine with much the same amount of sulphurous acid when they each contain the same amount of glucose. But invert sugar obtained by the action of hydrochloric acid and heat has a power of absorption double that of glucose, for in this case the fructose acts too.

The absorbing power of the sugar increases with the temperature and strength of the acid, especially when brought near to the point of caramelling, and when this takes place it is the fructose which first decomposes.

As the proportion of sulphur dioxide which combines with invert sugar varies very much, the amounts of sulphur dioxide were compared which are absorbed by a natural must and by an artificial must obtained by the action of yeast on saccharose. Both musts contained 175 gms. per litre of sugar. The results are given in Table II.

TABLE II. — *Combination of sulphurous acid with grape must and with sugar solution.*

| Amount of sulphur dioxide added per litre | Grape must | | | | Sugar solution | | | |
|---|---|---|---|---|---|---|---|---|
| | Amount of sulphur dioxide combined | | | Ratio of combined to total sulphur dioxide | Amount of sulphur dioxide combined | | | Ratio of combined to total sulphur dioxide |
| | After 1 hours | After 24 hours | After 48 hours | | After 1 hours | After 24 hours | After 48 hours | |
| mgms. | mgms. | mgms. | mgms. | per cent | mgms. | mgms. | mgms. | per cent |
| 100 | 80 | 90 | 95 | 95 | 38 | 45 | 50 | 50 |
| 200 | 150 | 165 | 170 | 85 | 75 | 93 | 95 | 47.5 |
| 300 | 195 | 235 | 242 | 80 | 90 | 140 | 140 | 46.6 |
| 400 | 212 | 285 | 295 | 73.7 | 108 | 175 | 178 | 44.5 |
| 500 | 230 | 335 | 350 | 70 | 48 | 205 | 205 | 40.1 |
| 750 | 270 | 340 | 450 | 60 | 40 | 250 | 285 | 38 |
| 1 000 | 320 | 560 | 570 | 57 | 80 | 270 | 340 | 34 |
| 2 000 | 350 | 840 | 940 | 47 | 60 | 360 | 550 | 27.5 |

It has also been demonstrated that the organic substances which are with the sugar in the cell juices can combine with the sulphur dioxide. To prove this, there was added to one part of a solution of sugar inverted by invertase from yeast, the residue obtained by evaporating nearly to dryness an infusion of yeast corresponding in volume to about four times the sugar solution. In this way the non-sugary elements were considerably increased. To both these solutions, one with and one without the non-sugary yeast residue, and both containing 200 gms. of invert sugar per litre, were added 400 mgms. of sulphur dioxide The same quantity of sulphur dioxide was added to some yeast juice made in the warmth and to some made in the cold. After 48 hours the sulphur dioxide had combined in the following proportions.

| | Sulphur dioxide combined per litre | Residue per litre after evaporation to dryness |
|---|---|---|
| | mgms. | mgms. |
| Solution enriched with non-sugary substances . | 280 | 223 |
| Solution of invert sugar . . . . . | 202 | — |
| Yeast juice made in the warmth . . . . . | 23 | 156 |
| Yeast juice made in the cold . . . . . | 90 | 540 |

Among other points that have been examined are the influence exerted on the combination of sulphurous acid by 1) the nature of the must; 2) the acidity, which at the strength generally used has no effect; 3) the temperature which, while hastening the action, has within the usual limits, *i. e.* from 15° to 25° C., but little effect on the amount combined; 4) the pressure of the atmosphere which has no influence either. A very low pressure can remove all the free sulphur dioxide, but only acts on combined sulphur dioxide if the temperature is considerably raised. A study has also been made of the disappearance in musts of sulphur dioxide due to evaporation and to oxidation into sulphuric acid by exposure to air.

The action of sulphur dioxide on special musts has been examined. According to experiments carried out by MULLER THURGAN and OSTERWALDER (1), must of healthy grape and of grape infected by *Botrytis cinerea*, to which 0.225 gm. and 0.450 gm. per litre of sulphur dioxide had been added, gave the following results.

| History of must | Amount of sulphur dioxide combined | | | |
|---|---|---|---|---|
| | After 1 hour | | After 3 days without fermentation | |
| | Healthy grapes | Infected grapes | Healthy grapes | Infected grapes |
| | mgms. | mgms. | mgms. | mgms. |
| Must to which 0.225 gm. sulphur dioxide per litre was added | 28 | 58 | 52 | 80 |
| Must to which 0.450 gm. sulphur dioxide per litre was added | 36 | 78 | 98 | 75 |

These experiments were repeated with *Botrytis cinerea* grown on grape must and on grapes. Some of the results are shewn in Table III.

TABLE III. — *The chemical combination of sulphur dioxide with must of healthy grapes and of grapes infected by Botrytis cinerea.*

| History of must | Amount of acid per litre | Amount of sugar per litre | Amount of combined sulphur dioxide | |
|---|---|---|---|---|
| | | | Per litre of must | Per litre of sugar |
| | gms. | gms. | mgms. | mgms. |
| Natural must from various white grapes | 7.1 | 158.6 | 264 | 160 |
| Same must infected by *Botrytis* | 0.54 | 147.1 | 260 | 177 |
| Must of Chasselas | 2.50 | 161.2 | 270 | 167 |
| Same must infected by *Botrytis* | 0.49 | 188.7 | 230 | 149 |

(1) See *R.* 1915. No. 738. (*Ed.*)

It thus appears that, contrary to the conclusions come to by MULLER THURGAN and OSTERWALDER, the increase in the quantity of combined sulphurous acid in the must of infected grapes depends on the concentration of all the ingredients of the must.

The following conclusions may be drawn from the experiments described above;

The combination of sulphur dioxide with grape must depends on the following factors:

1) The proportion of sugar, which can vary largely from that of healthy grape to that infected by *Botrytis cinerea*, called « pourriture noble » because of its enriching effect in certain wines.

2) The proportion of glucose to fructose which is generally equal to 1 in healthy grapes, but which sometimes is less, especially in the must of infected grapes; in this case the amount of combined sulphur dioxide tends to diminish as the fructose is inactive.

3) The existence of other substances than sugar in the must, and the acidity.

4) The physical conditions to which the must has been subjected.

5) A rise of temperature of the must, which, if it does not exceed 25°, hastens combination.

II. — THE INFLUENCE OF SULPHUROUS ACID ON THE FERMENTATION OF GRAPE MUST. — Previous experiments had shewn that if a moderate amount of sulphur dioxide is added to a must rapidly fermenting, it combines very quickly and without interrupting the fermentation. By repeated additions the relatively high proportion of 1 gm. per litre is reached for the combined sulphur dioxide.

A compound of aldehyde and sulphurous acid is produced, as PASSERINI shewed in 1909, and the writer has studied it under the following conditions;

To begin with, he added to two portions of must about 200 and 400 gms. of sulphur dioxide per litre respectively, and this combined entirely with the sugar, and other ingredients of the must. The must was then mixed with pure yeast and allowed to ferment, care being taken to exclude contact with the air as much as possible, and the following changes in the quantity of aldehyde present were noted as the amount of sugar decreased:

| Specimen to which no sulphur dioxide was added | | Specimen to which 200 gms. per litre sulphur dioxide were added | | Specimen to which 405 gms. per litre sulphur dioxide were added | |
|---|---|---|---|---|---|
| Amount of sugar destroyed per litre | Amount of aldehyde formed per litre | Amount of sugar destroyed per litre | Amount of aldehyde formed per litre | Amount of sugar destroyed per litre | Amount of aldehyde formed per litre |
| gms. | mgms. | gms. | mgms. | gms. | mgms. |
| 20 | 60 | 8 | 105 | 12 | 230 |
| 59 | 125 | 106 | 224 | 59 | 740 |
| 127 | 145 | 162 | 224 | 85 | 370 |
| 162 | 135 | 194 | 210 | 140 | 370 |
| 200 | 95 | 215 | 200 | 166 | 360 |

Aldehyde is formed in the control specimens as in those containing sulphur dioxide, but in much smaller quantities.

The sulphur dioxide is recovered at the end of the experiment with but slight loss, 10 mgms. out of 200, and 15 out of 405. This proves that as fast as the sulphur dioxide is set free from the sugar by the latter's breaking up, it enters into combination with the aldehyde and is thus retained; whereas, if any considerable proportion remained free it would be carried off by the carbon dioxide and much would be lost.

The fermentation of the must is sometimes seen to take place in the presence of free sulphur dioxide, even when a test portion taken from the top of the cask contains a fairly high percentage of sulphurous acid. To explain this, it is suggested that in the lees at the bottom of the cask there is a layer where the free sulphur dioxide combines with the aldehyde produced by the incompletely sterilised yeast. Here fermentation begins, at first but slight, and then with greater and greater evolution of carbonic acid gas according as the layer in which the sulphur dioxide enters into combination, grows in extent. It has been possible to prove this by experiment.

III. — THE INFLUENCE ON FERMENTATION OF SULPHUROUS ACID WHEN CHEMICALLY COMBINED. — *Changes in the rate of fermentation.* — The results of experiments undertaken to elucidate this question are shewn in Table IV.

TABLE IV. — *The influence on fermentation of sulphurous acid when chemically combined.*

| Time elapsed | Fermentation at 15°C. | | | | | Fermentation at 25°C. | | | | |
|---|---|---|---|---|---|---|---|---|---|---|
| | No sulphur dioxide $a$ | 200 mgms. sulphur dioxide per litre $b$ | 400 mgms. sulphur dioxide per litre $c$ | Ratio $\frac{b}{a}$ | Ratio $\frac{c}{a}$ | No sulphur dioxide $a$ | 200 mgms. sulphur dioxide per litre $b$ | 400 mgms. sulphur dioxide per litre $e$ | Ratio $\frac{b}{a}$ | Ratio $\frac{c}{a}$ |
| | gms. | gms. | gms. | per cent | per cent | gms. | gms. | gms. | per cent | per cent |
| 1 day . . | 0.8 | 0.15 | 0.15 | 19.0 | 19.0 | 2.2 | 1.05 | 0.65 | 47.5 | 30.0 |
| 2 days . . | 1.2 | 0.35 | 0.35 | 28.5 | 28.5 | 3.6 | 2.2 | 2.15 | 61.1 | 60.0 |
| 3 » . . | 1.65 | 0.65 | 0.65 | 39.4 | 39.4 | 4.65 | 3.25 | 3.05 | 70.0 | 65.6 |
| 4 » . . | 2.4 | 1.55 | 1.35 | 64.5 | 56.2 | 6.4 | 4.65 | 4.25 | 70.0 | 66.4 |
| 5 » . . | 3.2 | 2.95 | 2.00 | 91.5 | 62.5 | 7.45 | 5.8 | 5.35 | 77.8 | 71.8 |

The antiseptic influence of combined sulphurous acid on wine yeast is thus shewn to be perceptible in certain conditions; nevertheless, when the proportion does not exceed 200 mgms. per litre, which is the maximum for musts purified in the ordinary way, the rate of fermentation is but slightly decreased, unless the temperature sinks to below the normal.

*Changes in the selective affinity of yeast.* — Normally, yeasts which cause grape sugar to ferment shew a marked preference for glucose. But

under certain conditions the contrary is the case, especially when fermenting must or re-fermenting sweet wine contains a high proportion of combined sulphurous acid.

One experiment shews clearly the influence of the sulphurous acid on the selective affinity of the yeast. But it is impossible to say whether this is due to a temporary modification of the protoplasm or to a survival of the fittest among the yeasts.

IV. — THE CHEMICAL COMBINATION OF SULPHUROUS ACID IN WINES. Wine and must made from healthy grape and from grape infected by *Botrytis cinerea* were compared, and the results shewn in Table V. were obtained.

TABLE V. — *A comparison of must with wine.*

| | Must from healthy grape | Wine from healthy grape | Must from botrytised grape | Wine from botrytised grape |
|---|---|---|---|---|
| | mgms | mgms. | mgms. | mgms. |
| Free sulphur dioxide . . . . . | 40 | 20 | 40 | 16 |
| Combined . . . . . | 160 | 168 | 160 | 168 |
| Total . . . | 200 | 188 | 200 | 184 |

In both cases the power of wine for combining with sulphurous acid was very little different from that of the must; it was slightly higher because of the existence of traces of aldehyde in the former.

Experiments were also made on the capacity for combining with sulphur dioxide of wines which have fermented in the presence of sulphur dioxide. From the same must two specimens of wine were prepared, N° 1, a control specimen, and N° 2, which had been allowed to ferment in the presence of sulphur dioxide and which contained 296 mgms. sulphur dioxide and 220 mgms. aldehyde per litre. To both wines about 2 mgms. sulphur dioxide was added, and after 48 hours they proved to have the following amounts of sulphur dioxide.

| | Wine N° 1 | Wine N° 2 |
|---|---|---|
| | mgms. | mgms. |
| Free sulphur dioxide . . . . | 20 | 16 |
| Combined sulphur dioxide . . | 168 | 480 (296 + 184) |
| Total sulphur dioxide . . . | 188 | 496 |

This shews that N° 2 has in a combined state only a little more of the sulphur dioxide subsequently added than has N° 1.

*The checking of fermentation.* — A litre of fermenting wine containing still 80 gms. of sugar per litre was divided into three parts, and to each part was added 66 mgms. of sulphur dioxide. To the first portion this

was added directly, to the second after heating to 80° C. to kill the yeast and then cooling, and to the third after filtering to remove completely the yeast. After standing for 48 hours, analysis shewed no difference between the three portions for all contained 20 mgms. of free sulphur dioxide and 176 mgms. of it combined. So the presence of yeast has no influence on the amount of sulphur dioxide that enters into combination when the fermentation is stopped, if the quantity added has been sufficient to stop fermentation at once. Nevertheless, with a view to the later preservation of the wine, it is better to eliminate by a preliminary racking the thick lees at the bottom of the cask, for this might give rise to a slow fermentation which would carry off the free sulphur dioxide.

The different factors which cause variation in the amount of combined sulphur dioxide have been examined, and the results are drawn up in Table VI.

TABLE VI. — *Different factors that regulate the amount of sulphur dioxide that enters into chemical combination.*

| | History of wine | Total sulphur dioxide per litre | Combined sulphur dioxide per litre | Aldehyde per litre | Alcohol per cent | Sugar per litre |
|---|---|---|---|---|---|---|
| | | mgms. | mgms, | mgms. | | mgms. |
| Sauternes | Fermented | 200 | 96 | 0.0 | 16.0 | 5.0 |
| | Fermented | 196 | 146 | 50.0 | 14.0 | 55.0 |
| | Without precipitation | 182 | 126 | 80.0 | 14.0 | 4.5 |
| | After precipitation | 324 | 252 | 135.0 | 11.9 | 45.6 |
| | Preserved normally | 296 | 192 | 87.5 | 14.5 | 55.6 |
| | Refermented | 424 | 352 | 155.0 | 15.0 | 45.6 |
| Monbazillac Wine | After several precipitations | 392 | 392 | 200.0 | 11.0 | 127.0 |
| | Without precipitation | 220 | 140 | 100.0 | 13.5 | 80.0 |

The preservation of some wines of Gironde for about a year were studied, the amount of sulphur dioxide being kept constant by successive additions. It appears that its preservation during two years can be secured by a small total amount of sulphur dioxide if it is added at intervals.

CONCLUSIONS. — The following conclusions may be drawn from these experiments:

1) Sulphurous acid added to grape must soon enters into chemical combination, partly or wholely. The sugar absorbs most of it, but only the glucose, for the fructose is inactive. Other ingredients of the must can also combine with it in measurable quantities which depend on the nature of the must. In an ordinary must when the quantity of sulphur dioxide added reaches 100 mgms. per litre, complete combination no longer takes place, and the proportion of combined sulphur dioxide to total sulphur dioxide decreases as more is added. A state of equilibrium between the free

and combined sulphur dioxide is reached which varies with the nature of the must and the total amount of dioxide. Certain changes, however, in the nature of the must appear to have no appreciable influence on the proportion of combined dioxide; such are changes of acidity within ordinary limits and the the direct action of *Botrytis cinerea*.

2) Sulphur dioxide forms a chemical combination with the aldehyde in the must and is thus completely retained in the wine. The aldehyde is produced by the action of yeast on sugar in the absence of air and when combined with sulphurous acid it escapes much more easily from all hydrogenising and hydrolising actions, which are at their strongest when the yeast has reached its maximum growth and the sugar has grown less.

3) In spite of the greatly reduced antiseptic properties of sulphur dioxide when combined, its presence in a fermenting must can modify the physiological action of the yeast. The increase in production of aldehyde is a proof and further experiments would produce others; an analysis of the products of fermentation would show this.

The rate of fermentation is lightly lessened even by a small amount of combined sulphurous acid not exceeding 200 mgms. per litre, especially at first, and if the temperature is somewhat low; at 25° C. the retarding effect is much less than at 15°.

Finally, the selective affinity of the yeasts seems to be so much influenced by it that the proportion of glucose to fructose becomes higher than 1 during fermentation, and this influence should be studied further because of its effect on the constitution of sweet wines.

4) The proportion of combined sulphur dioxide in cheap table wines, ("vin ordinaire") does not differ very much from that in the must which produces it. But in the case of a grape must infected by *Botrytis cinerea* and very rich in sugar, the sweet wine it gives rise to has generally a much smaller combining power, very much the same as that of a "vin ordinaire".

The addition of sulphur dioxide to a must changes but little the combining power of the wine obtained from it, for the initial dioxide is taken up by the aldehyde and the product formed is more or less independent of the other ingredients of the wine. But of course this initial combined sulphur dioxide is extra to the amount of combined dioxide formed by a later addition.

The checking of fermentation can be done in contact with living yeast without using excess of sulphurous acid, so long as enough acid is added to stop the fermentation completely, and that the lees are withdrawn as speedily and completely as possible.

Several factors may necessitate an increase in the total amount of dioxide needed to preserve sweet wines; they concern the method of wine-making, and the later treatment given to these wines. Thus, excessive aeration and a too prolonged fermentation favours the formation of aldehyde, and consequently the combination of sulphurous acid; but precipitation in presence of sulphurous acid and secondary fermentation after sulphiting have a greater effect in increasing the amount of sulphur dioxide which

enters into combination and, consequently, of the amount which must be used.

Therefore precipitation in presence of sulphurous acid, a method seldom now used for musts concentrated by *Botrytis cinerea*, must be avoided as much as possible.

Finally, during three or four years, the normal period of preservation of wines, a certain increase in the amount of combined sulphur dioxide must be expected. This is due to the formation of aldehyde, and to the concentration of the liquid by spontaneous evaporation.

These researches shew that sulphur dioxide in a state of combination plays a very complex part in wine-making, nearly as important as that of the free dioxide. The latter alone can ensure the preservation of sweet wines, and, consequently, care must always be taken that its proportion never becomes less than 25 to 30 mgms. per litre; but since the amount of total sulphur dioxide must never exceed a certain limit, the amount of combined dioxide must be watched also with much care.

Besides, it is always important to preserve heavy wines with as little total sulphur dioxide as possible, and hence it follows that the utmost care must be taken to diminish the amount that enters into combination.

1216 – **The Dessication of Potatoes in Germany.** — PAROW, in *Georgine*, No. 73-74, p. 572 Koenigsberg, Pr., Sept. 9, 1916.

The dessication of potatoes has made rapid strides in Germany. The number of factories grew from 3 in the first year, 1903, to 39 in 1196, 199 in 1909, 403 in 1912, and 488 in 1914.

The need for these factories has become more apparent than ever since the outbreak of the war, and the Government helps to start them by granting subsidies. The "Trocken-Zentrale," at Berlin was directed to do all that was possible to hasten the construction of dessicators. The "Trocken-Kartoffel-Verwertungs-Gesellschaft" (Society for utilising dessicated potatoes) has been founded in order to collect and distribute the output, and this has helped to increase the number of factories to 721 in 1915. On July, 1916, there were in all in the German Empire 841 factories, which were distributed as follows among the different provinces:

| | | | |
|---|---|---|---|
| Anhalt | 10 | Hanover | 22 |
| Bavaria | 10 | Hesse-Nassau | 1 |
| Brunswick | 8 | Pomerania | 151 |
| Free Towns | 1 | Posen | 152 |
| Hesse, Grand Duchy | 2 | Rhenish Provinces | 3 |
| Saxony, Kingdom | 9 | Saxony, Province | 44 |
| Mecklenbourg | 27 | Silesia | 118 |
| Saxe-Weimar | 3 | Schleswig-Holstein | 2 |
| Schwarzbourg-Rudolstadt | 2 | Westphalia | 2 |
| East Prussia | 43 | West Prussia | 71 |
| Brandenbourg | 130 | | |

The productive power of these works, although considerable, is not sufficient for the present need. The output is large, but is limited by insufficiency of material and workmen, etc. Whilst in 1915 it was not possible to get enough raw material, in 1916, thanks to a better harvest, there will be a bigger supply. But lack of workmen prevent the factories from being used to their full extent.

With the works going continuously day and night for 200 days all the factories of the empire are able to produce 12 million tons of dried potatoes from 30 million tons of raw material.

That the quantity produced by the whole empire does not meet the needs of the population is due to the fact that dried potatoes are wanted for horses too. For if each horse received daily only 4 $^1/_2$ lbs, 2.6 millions tons would be consumed by them in a year. Further, if cattle, pigs, sheep, goats and horses, a total of 60 million head of stock, received 2.2 lbs. of dried potatoes each daily, they would consume 21.9 tons of dried potatoes yearly, and this corresponds to 87.6 tons of fresh potatoes.

The technique of dessication has made surprisingly rapid strides in the few years since it was first started. Cylinders, " Walzenapparate ", and drums " Trommelapparate ", are now generally used. The former can deal with 1.2 or 1.5 tons of potatoes per hour, and the latter up to 5 tons. The fresh potatoes are transformed into a dry substance which is easy to transport and which can be preserved almost indefinitely. They are generally made into flakes and cubes for cattle and into various potato flours for human consumption. The machines are easy to run ; 8 to 10 HP is enough for those of medium size and 15 to 25 for the larger ones. On an average 12 to 14 tons of coal are used for 100 tons of potatoes for the making of flakes, and 8 to 10 tons of coke for the making of cubes.

The total cost of drying 1 cwt. of potatoes is 0.30 to 0.40 mark and from 0.40 to 0.50 mark in the smaller ones (a mark before the war equalled 11 $^1/_2$ *d* and has by now fallen in value to about 8*d*). The cost has gone up slightly since the war. Because of the increased cost of desiccating and the high price of raw potatoes, a maximum price has been fixed for dried potatoes, 22.0 marks per cwt. of flakes and 21.42 marks per cwt. of cubes at the factory.

Reckoning that 4 cwt. of raw material make 1 cwt. of dried product and that 1 cwt. of fresh potatoes costs 4 or 4.5 marks, it will be seen that the desiccation of potatoes pays, even in war time, if the machinery is put to its full use. Higher profits are made if other vegetable products besides potatoes are used, and the greater their variety, the better. The machines for making cubes are the best for this purpose, for they can also desiccate beet root, leaves, cereals, grass, vegetables, and have earned the name of " Allestrockner " (universal desiccators).

Besides preparing stock foods, the machines for making flakes will also in the future be more largely used for preparing food for human consumption.

1217 – **On the Action of Alkalies and Acids on Rubber.** — EATON, B. J., in *The Agricultural Bulletin of the Federated Malay States*, Vol. IV, No. 6, pp. 162-167. Singapore, March 1916.

In a previous number of *The Agricultural Bulletin* (Vol. IV, N°. 2, Nov. 1915), it was shown that solutions of caustic soda and of carbonate of soda perceptibly hastened the vulcanisation of rubber obtained from plantation Para rubber, *Hevea brasiliensis*. Since it had also been demonstrated that vulcanisation is retarded by coagulation with excess of acetic acid, the hypothesis was put forward that the acceleration produced by soda was due to the neutralisation of the residual acid, and the production of a more favourable medium for the organisms which are believed to cause the more rapid vulcanisation.

In order to see whether it was by direct chemical action on the rubber that the alkalies hasten vulcanisation, further experiments were carried out on finished rubbers, that is rubbers in a crepe form. In this way the possibility of biological action was precluded by the dryness of the samples. Two types of rubbers were chosen, a fast and a slow curing rubber. The first had been prepared in the usual way by crepeing slab rubber which had been left standing at least six days, and the second by crepeing fresh coagulum on the day of coagulation. Solutions of caustic soda and caustic potash were used. From the results of these esperiments the following conclusions may be drawn.

1) The effect of soda and potash on rubber is to increase markedly the rate of vulcanisation.

2) This effect is similar on slow and fast curing rubbers.

3) The effect of alkalies appears, at present, to be due to chemical action on some constituent of the rubber, but the evidence on this point is still incomplete, and further researches are being carried out.

4) Sulphuric and other mineral acids, potash alum and probably other mineral salts retard vulcanisation. Their effect is greater with quantities beyond the minimum necessary for coagulation.

5) The results obtained with mineral acids are important in connection with estate practice in view of the probable substitution of sulphuric acid for acetic acid, and show that great care will have to be taken in maintaining standard conditions, more so than in the case of acetic acid, in which a moderate excess over the minimum necessary for coagulation has little effect.

The use of alkalies in the preparation of raw rubber has a deteriorating effect on manufactured rubber goods. This entirely confirms the deteriorating effect found to occur even on the raw rubber after keeping.

1218 – **New Dairy Industry Legislation in New South Wales, Australia.** — O' CALLAGHAN, M. A., in *The Agricultural Gazette of New South Wales*, Vol. XXVII, No. 6, pp. 409-414. Sydney, June 2, 1916.

INDUSTRIES DEPENDING ON ANIMAL PRODUCTS

The " Dairy Industry Act " which was passed December 21, 1915 and came into force June 21, 1916, amends the " Dairy Supervision Act " of 1901 and other acts dealing with the same matter.

The new law regulates the manufacture, sale, storage, transit and export of dairy produce, including margarine, the testing, mixing and

grading of creams, the basis of payment for cream, and for the grading and branding of butters. The Government has given wide powers to the Board of Agriculture, which now controls the work of butter factories throughout, and to a certain extent the work of cheese factories, condensed milk factories and margarine factories. New South Wales is a great butter producing country; hence the particular interest of this question, for it is only butter superior to that hitherto made that can hold its own against margarine in the English market.

When the Dairy Industry Act was passed by the Government, and creams were henceforward classified, the producers of highclass butters and creams benefited as a distinction is now drawn between their goods and those of inferior quality.

The law states that cream must be paid for either on the basis of the butter fat results, as shewn in the O' Callaghan Chart, or on the amount of butter obtainable from such cream.

According to Clause 12, the manager of every dairy produce factory shall grade or cause to be graded all cream supplied to him. He may not mix the various grades of cream or butter. Butter from graded cream shall be put up in packages bearing a brand registered under the Act representing the grade or quality and the factory if desired.

As hitherto creams of various qualities have been produced it was not easy to provide classification which would bring about the desired result, and at the same time not be too severe on factory managers till they had got accustomed to the workings of the Act. The suggested classification avoids the necessity of grading into more than two qualities for the present. It is clear and simple, and does tardy justice to the producers of untainted cream.

Creams supplied to dairy produce factories must be classified as follows:

N.° 1. — Untainted or choicest.

N.° 2. — Tainted.

Untainted creams must be free from all taints, whether caused by the foods the cows have consumed or by bacterial or any other agency. Such cream should also have a smooth and even texture and should not contain more than 0,4 per cent of lactic acid.

Such creams when made into butter will reach the standard-minimum, 95 points, prescribed in the Commerce Act for superfine butter. No penalty is inflicted if such butter during the 12 months subsequent to the gazettal of these regulations, grades a minimum of 43 points for flavour.

Tainted cream (N.° 2) is subdivided into.

N.° 2 *a* — Lightly tainted.

N.° 2 *b* — Badly tainted.

N.° 2 *a* is cream affected by food taints, slight biological taints, or by a combination of both.

N.° 2 *b* is a cream affected by advanced biological taints, but which has not reached the putrescent stage.

Clause 13 forbids the use of putrescent cream for making butter, and

prescribes that it shall be treated with such substances as shall not destroy their value as animal food. It may be returned to the supplier.

A clause which protects the cream supplies obliges the managers of factories to send every month to the Under Secretary of the Department of Agriculture a statement of the quantity of each grade of butter made in his factory, and the quantity of butter which the suppliers of cream have been paid for.

Butter may not be exported without being graded. If its grade is found to be different from that indicated by the registered brand on the package, it may not be exported under that brand. A certificate of grading shall be supplied to the manufacturer and the exporter.

All butter, cheese and margarine factories must register under the Act and all stores.

A store is defined as a place where condensed milk, butter, cheese or margarine is stored whether in a cold chamber or otherwise, but does not include premises used for the sale by retail of such dairy produce. But if a retailer stores butter in quantity on this premises, such store could not be included as a retail section, and therefore would have to be registered.

Anyone keeping dairy produce where it may deteriorate owing to heat, bad smell or the proximity of unclean matter is liable to a penalty not exceeding L. 20 This applies more particularly to cream and butter which are more sensitive to their surroundings than cheese.

The butter merchants of Sydney have decided to store their butter in a cold store during the night.

1219 – **Investigations on the Protease of Milk Bacteria.** — SWIATOPELK-ZAWADSKI, in *Zeitschrift für Untersuchung der Nahrungs und Genussmittel, sowie der Gebrauchsgegenstände*, Vol. 32, No. 4, pp. 161-170. Münster i. W., August 15, 1916.

A series of very careful experiments were carried out on the production of protease by milk bacteria. The results are discussed and compared with those obtained by other investigators, and the following conclusions are drawn:

1) Pure fresh milk contains no peptone.

2) True lactic acid bacteria do not dissolve casein within a period of 7 days, *i. e.* they do not produce protease.

3) The presence of peptone in a self coagulated milk can only be attributed to the presence of peptonising bacteria.

4) The decomposition of casein and other albuminoid substances only occurs through the agency of bacteria.

5) The rate at which the albuminoids are converted to peptones increases with the temperature up to 44° C.

6) Proteolytic ferments may be produced by aerobic and anaerobic bacteria, both spore-forming and non spore-forming.

In the present experiments the most active aerobic bacteria were *Bacillus pyocyaneus* (after 6 hours), *Bac. prodigiosus* (after 18 hours) and *Bac. coli commune* (after 24 hours); and amongst the spore-formers *Bac. subtilis* (after 6 hours) and *Bac. mesentericus vulgatus* (after 18 hours).

The most active anaerobic bacterium was the spore-forming *Paraplectum foetidum* (after 24 hours).

7) The amount of peptone produced and the rate at which it is formed vary not only with the different species but often with different strains of the same species (*e. g. B. subtilis*).

8) The hydrolysis of casein can take place independently of the coagulation of milk, which does not even assist the process.

9) In the present experiment neither the amount of peptone produced nor its rate of production by aerobic bacteria was affected by the presence of other bacteria in the medium. At about 12° C. the activity of protease is always somewhat retarded. Sterilized milk inoculated with pure cultures of various organisms and incubated at 12° C. already contained peptone after 8 hours with *B. pyocyaneus* and *B. subtilis* and after anything up to 14 days with *B. coli commune, B. prodigiosus, B. paraplectum foetidum, B. mesentericus vulgatus* or in other words the presence of *B. acidi lactici* in the unsterilized milk had no appreciable effect on the results.

1220 - **The Supply of Rennet for Cheese Making in Italy** (1). — I. BESANA, C., (The lack of coagulating ferments for the cheese factories). — II. FASCETTI, G., (How to supply the necessary amount of rennet.) in *Le Stazioni sperimentali agrarie italiane*, Vol. XLIX, No. 1, pp. 10-12 and 13-16. Modena, 1916.

In Italy the slaughter of calves weighing less than 400 lbs. is prohibited. Consequently the stomachs of calves nourished wholly on milk or in other words those best adapted to the manufacture of rennet are excluded from the market. At the present time, imports of dried stomachs from European countries have almost ceased and it seems uncertain how far it will be possible to obtain the material from elsewhere. Normally 45-50 tons of rennet are used annually in the Italian cheese factories and of this about one half is imported abroad. Under these circumstances it is essential that Italy should take steps to prevent a shortage of rennet in the country. To this end it is suggested:

1) That the available calves stomachs be more completely extracted and that the use of lambs' and kids' stomachs be encouraged and developed. The latter are already employed in the manufacture of « pecorino » cheese, but only to a very slight extent.

2) That the preparation of a vegetable rennet from the capituli of the cardoon (*Cynara Cardunculus* ) be encouraged. This plant grows wild in central and southern Italy and might well be cultivated for rennet production.

3) That an attempt be made to produce coagulating enzymes from bacterial cultures.

1221 - **The Abnormal Composition of Fat in a Pig, Fed on Maize.** — RIEVEL, in *Zeitschrift für Untersuchung der Nahrungs und Genussmittel, sowie der Gebrauchsgegenstände*, Vol. 132, N°. 4 pp. 178-181. Munster i W., August 15, 1916.

The fat on the carcase of a seven months old pig was found to be quite abnormal. It was firm, opaque, almost dead white and chalky when freshly

(1) See *B.* Feb. 1916, No. 233. (*Ed.*).

cut. On being melted out it solidified very quickly forming a greyish lard with a very smooth even surface which did not show the usual depression in the middle with concentric rings radiating outwards. The lard was hard and cut like paraffin. Its constants were determined and compared with those of other fats as follows:

| | Abnormal lard | Normal lard | Mutton fat | Venison fat |
|---|---|---|---|---|
| Solidifying point °C | 46.9 | 37.2–39.8 | 34.45 | 40.05 |
| Melting point °C | 56.5 | 26.5–28.6 | 49.25 | 51.50 |
| Solubility per 100 parts chloroform at 17°C | 80 | 100 | 71 | 71 |
| Refractive index at 40°C | 43.9 | 50.6–50.9 | 46.85 | 44.75 |
| Refractive index of chloroform solution at 17°C | 41.9 | 46.1–47.5 | 47.45 | 40.55 |
| Saponification value | 159.9 | 196–198 | 196 | — |
| Reichert-Meisel value | 2.5 | 0.3–0.9 | 0.25 | — |
| Iodine value | 23.6 | 46–47 | 40 | — |
| Ash per cent | 1.24 | traces | — | — |

The fat differed so markedly from ordinary lard that it could not be designated as such. It more closely resembled mutton or venison fat. The writer suggests that the abnormal character of the lard was due to the fact that the animal had been fed for a long time on damaged maize. As a rule a maize diet causes the production of a soft and oily fat but in the present case opposite effects were observed and these can only be explained on the assumption that the prolonged feeding with the damaged maize resulted in grave metabolic disturbances in the pig and that these interfered with the deposition of fat.

1222 – **The World's Sheep and their Wool with Special Reference to the Production in Australasia.** — *Dalgety's Review, Annual Wool Number*, Year XXIV, N°. 4, pp. 3 Sydney, July, 1, 1916.

The National Association of Wool Manufacturers in America issued two tables in which are given the latest figures for the total nu of sheep in the world, and for the world's production of wool. They ca of course be taken as exact statements for in some cases the figures to pre-war periods; they are merely meant give an approximate idea the situation. The tables are as follows:

TABLE I. — *Distribution of sheep in the world.*

| Country | Year | Number |
|---|---|---|
| *North America:* | | |
| United States Continental | 1915 | 49 050 000 |
| Hawaii | » | 76 719 |
| Porto Rico | » | 6 363 |
| Alaska | » | 199 |
| Total, United States | | 50 039 281 |

| | | |
|---|---|---|
| Canada | 1915 | 2 038 662 |
| Newfoundland | — | 97 597 |
| Mexico | 1902 | 3 424 430 |
| Central America | — | 124 044 |
| Cuba | — | 9 982 |
| British West Indies | — | 27 980 |
| Dutch West Indies | — | 22 643 |
| Guadeloupe | — | 11 731 |
| | | 5 757 069 |
| Total, North America | | 55 796 350 |
| *South America:* | | |
| Argentina | 1912 | 83 545 931 |
| Brazil | 1913 | 10 653 000 |
| Bolivia | 1910 | 1 454 729 |
| Chili | 1914 | 4 602 317 |
| Colombia | — | 746 000 |
| Uruguay | 1908 | 26 286 296 |
| Falkland Islands | — | 711 000 |
| Other countries | — | 407 000 |
| Total, South America | | 128 406 273 |
| *Europe:* | | |
| Austria-Hungary | 1910-13 | 12 337 867 |
| Belgium | — | 235 722 |
| Bulgaria | 1910 | 8 632 388 |
| Denmark | — | 1 319 197 |
| Finland | | 1 309 000 |
| France | 1915 | 13 483 189 |
| Germany | 1914 | 5 451 570 |
| Greece | — | 4 000 000 |
| Italy | 1908 | 11 162 926 |
| Netherlands | — | 842 000 |
| Norway | — | 1 393 000 |
| Portugal | 1906 | 3 077 978 |
| Roumania | 1911 | 5 269 493 |
| Russia in Europe | 1911 | 46 381 000 |
| Saxony | — | 58 185 |
| Serbia | 1910 | 3 818 997 |
| Spain | 1913 | 16 441 407 |
| Sweden | 1911 | 946 000 |
| Switzerland | 1911 | 160 000 |
| Turkey | 1910 | 21 190 000 |
| United Kingdom | 1915 | 27 552 136 |
| Other countries | — | 20 000 |
| Total, Europe | | 185 077 065 |
| *Asia:* | | |
| British India: | | |
| British provinces | 1914 | 23 091 955 |
| Native States | » | 8 129 000 |
| Total, India | | 31 220 955 |

| | | |
|---|---|---|
| Ceylon | 1912 | 91 000 |
| Cyprus | 1912 | 256 000 |
| Japan | 1912 | 3 357 |
| Philippine Islands | 1913 | 103 000 |
| Russia in Asia | 1911 | 34 493 000 |
| Turkey in Asia | 1912 | 27 094 678 |
| Other countries | — | 60 000 |
| Total, Asia excluding India | | 62 101 035 |
| *Africa :* | | |
| Algeria | 1912 | 8 338 023 |
| British East Africa | — | 6 500 000 |
| German East Africa | 1913 | 6 439 647 |
| German West Africa | 1912 | 499 000 |
| Madagascar | 1911 | 352 000 |
| Rhodesia | 1911 | 300 000 |
| Soudan (Anglo-Egyptian) | 1909 | 830 000 |
| Tunis | 1912 | 767 000 |
| Uganda | 1914 | 542 000 |
| Cape of Good Hope | — | |
| Natal | — | |
| Orange Free State | — | |
| Transvaal | 1913 | 35 710 843 |
| Other countries | — | 4 139 335 |
| Total, Africa | | 64 408 848 |
| *Oceania :* | | |
| Australia | 1915 | 82 011 606 |
| New Zealand | 1915 | 24 465 526 |
| Total, Australasia | | 106 477 132 |
| Other countries | | 10 000 |
| Total, Oceania | | 106 487 132 |
| Total, World | | **633 497 658** |

The remarks made in the introduction apply with even more force to the world's wool production. Reliable statistics are available for the United States, Australasia and British South Africa. In other countries the quantities reported the previous year are used, and in some cases where the report of the number of sheep has been materially altered, the quantity records has been modified accordingly. There is an apparent anomaly in the increase in the number of Argentine sheep reported and the steady decrease of wool exports. In 1907 the Argentine census re that 67 200 000 sheep ; more recent estimates increase the number distribu- tine sheep to 83 545.931. At the same time the wool exports h of the season, from 178 000 metric tons in 1907-1908 to 120 000 in 1913- urchased large tional Association puts forward the suggestion that the ce 41 per cent of cluded shearing sheep only and made no account of lambs, financial state- the reports included both sheep and lambs. In the absence

gentine returns the sheep figures are presented with this suggestion. The wool production of the world is given below.

TABLE II. — *Wool production of the world.*

| Country | Lbs. of wool |
|---|---|
| *North America:* | |
| United States | 288 777 000 |
| British Provinces | 11 210 000 |
| Mexico | 7 000 000 |
| Total, North America | 306 987 000 |
| *Central America and West Indies* | 750 000 |
| *South America:* | |
| Argentine | 264 500 000 |
| Brazil | 35 000 000 |
| Chili | 17 000 000 |
| Peru | 9 420 707 |
| Falkland Islands | 3 200 000 |
| Uruguay | 143 203 000 |
| Other countries | 5 000 000 |
| Total, South America | 777 413 707 |
| *Europe:* | |
| Austria-Ungary | 41 600 000 |
| France | 75 000 000 |
| Greece | 16 000 000 |
| Germany | 25 600 000 |
| Portugal | 10 000 000 |
| Italy | 21 500 000 |
| Russia in Europe | 320 000 000 |
| Spain | 52 000 000 |
| Turkey and Balkan States | 90 500 000 |
| United Kingdom | 121 200 043 |
| Other countries | 36 000 000 |
| Total, Europe | 803 400 043 |
| *Asia:* | |
| British India | 60 000 000 |
| China | 50 000 000 |
| Persia | 12 146 000 |
| Russia in Asia | 60 000 000 |
| Turkey in Asia | 90 000 000 |
| Other countries | 1 000 000 |
| Total, Asia | 273 146 000 |
| *Africa:* | |
| Algeria | 33 184 000 |
| British Africa | 157 761 470 |
| British Indies | 3 735 000 |
| Native States and other countries | 13 000 000 |
| Total, Africa | 207 680 470 |

| | |
|---|---|
| *Oceania:* | |
| Australia and Tasmania | 569 775 000 |
| New Zealand | 197 866 914 |
| | 767 841 014 |
| Other countries | 100 000 |
| Total, Oceania | 767 141 014 |
| Total, World | **2 836 519 000** |

Summarising, the various parts of the world in order of production are as follows:

| | Lbs. of wool |
|---|---|
| Europe | 803 400 643 |
| America | 785 150 707 |
| Oceania | 767 141 914 |
| Asia | 273 146 000 |
| Africa | 207 680 470 |

*Australasian production of wool.* — The oversea export of wool during the statistical year ended June 30 amounted to 1 619 259 bales from the Australian Commonwealth and 510 656 bales from New Zealand, the for mer being an increase of 43 571 bales as compared with the preceding season and the latter a decrease of 51 358 bales. These figures do not, however, provide anything like a true index of the state of production for the past season, because of the heavy carry-over of 1914-1915 clip wools (approximately 200.000 bales) to the 1915-1916 season while there remained unshipped on June 30 about 65 000 bales. The actual production of wool in Australia for export during the 1915-1916 season can therefore be set down as 1 484 000 bales as compared with 1 775 000 bales for 1914-1915. For New Zealand the corresponding figures are 510 656 and 562 014 respectively. Adding together the Commonwealth and New Zealand figures, a total Australasian production of 1 994 656 bales is obtained as compared with 2 337 014 bales for the previouus season (or a decrease of 342 014 bales). Taking the comparison back two seasons, the figures show a falling off in production for export of 532.807 bales since 1913-1914.

The 1 994 656 bales produced averaged 3 227 lbs. in weight, so that the actual wool output for 1915-1916 was 654 032 880 lbs. The distribution of the output is given in Table III. As special features of the season, it may be pointed out that America, Italy and Japan purchased large quantities of wool while the United Kingdom only took 41 per cent of the total sales as against 64 per cent the previous year. The financial statements of the sales in the different markets were as follows:

| Market | No. of bales | Value |
|---|---|---|
| | | £ |
| Sydney | 707 969 | 10 429 770 |
| Melbourne and Geelong | 349 984 | 5 632 152 |
| Adelaide | 115 314 | 1 525 972 |
| Freemantle | 1 459 | 16 527 |
| Brisbane | 246 376 | 4 279 498 |
| Tasmania | 22 016 | 303 643 |
| New Zealand | 364 861 | 7 715 970 |
| Australasia | 1 807 979 | 29 903 532 |

Average price per bale £16 10*s* 10*d* (1).

The gross revenue as shown above exceeded that of 1914-1915 by ten million sterling.

The 1914-1915 clip was characterised by a rise in the proportion of crossbred to merino wool and in this connection it is interesting to contrast the clips over a period of 5 years. At Melbourne in 1911-1912, 56 per cent of the wool sold consisted of merino, the rest being crossbred, but in 1915-1916 the percentage had been reduced to 48. At Geelong over the same period the reduction was smaller *i. e.* from 51 to 49 per cent. The increasing amount of crossbred wool on the market is attributed to the growth of the frozen meat trade which is gradually causing the pure merino flocks to be replaced by general purpose sheep *i. e.* sheep which are more suitable for the production of mutton though their fleece may not be quite so fine as that of the merino. Nevertheless in Queensland the merino is still likely to hold its own, as the recent drought there has demonstrated clearly the special hardiness of the Peppin and South Australian types and has made owners less anxious to try experimental crosses with English breeds. With regard to the demand for the two classes of wool, the war has caused an unprecedented run upon the coarser kinds to supply the army clothing departments. America has on the other hand been a keen buyer of the finer types.

A comparison of the average weight of fleeces for the last three seasons is given below:

| | No. of fleeces per bale | Average weight of bale |
|---|---|---|
| 1913-1914 | 41.56 | 327.2 |
| 1914-1915 | 43.97 | 329.1 |
| 1915-1916 | 44.31 | 322.7 |

These figures are not altogether a true indication of how the sheep are cutting as the weight of the bales varies and shows a tendency to become lighter. From the above figures the mean yield per sheep for 1915-1916 and 1914-1915 was 7.28 and 7.41 lbs. respectively.

The top prices made in any one year on the Australian markets have

(1) Corresponding figures for 1913-1914 were: 2 527 463 bales for a gross value of £33 478 353 or £13 4*s* 11*d* per bale.

been collected in Table IV and show how the figures for 1915-1916 completely put all previous records in the shade. Table V indicates the course of quotations for the various qualities since 1910.

There is every indication that the clip for the present season will be larger than that for 1915-1916. The flocks are everywhere in good condition and the owners look forward to a yield of heavy fleeces.

TABLE III. — *Destination of exports of Australasian wool (1914-1915 and 1915-1916).*

| Destination | 1915-1916 | | 1914-1915 | |
|---|---|---|---|---|
| | No. of bales | Per cent of total export | No. of bales | Per cent of total export |
| United Kingdom | 742 178 | 41 | 983 355 | 64 |
| France | 57 345 | 3 | 58 706 | 4 |
| Belgium and Netherlends | — | — | 5 459 | — |
| Germany and Austria | — | — | 8 439 | 1 |
| Italy and Switzerland | 166 916 | 10 | 68 436 | 4 |
| Russia, Norway and Sweden | 7 422 | — | 1 466 | — |
| United State and Canada | 564 433 | 31 | 234 896 | 15 |
| Japan, China and India | 113 611 | 6 | 81 890 | 9 |
| Local manufactures | 156 074 | 9 | 102 152 | 7 |
| | 1 807 979 | | 1 544 799 | |

TABLE IV. — *Top prices made for wool in the Australasian markets (pence per lb.)*

| Year | Greasy fleece | | Scoured fleece | |
|---|---|---|---|---|
| | Merino | Crossbred | Merino | Crossbred |
| 1915–1916 | 24 3/4 | 23 1/4 | 44 1/2 | 27 |
| 1914–1915 | 18 3/4 | 18 | 28 | 22 1/4 |
| 1913–1914 | 20 1/4 | 15 | 28 | 20 3/4 |
| 1912–1913 | 19 1/4 | 15 3/4 | 26 1/2 | 20 1/2 |
| 1911–1912 | 18 1/2 | 14 3/4 | 24 3/4 | 17 3/4 |
| 1910–1911 | 18 1/4 | 15 1/4 | 24 1/2 | 20 |
| 1909–1910 | 21 | 18 1/4 | 25 1/4 | 20 1/2 |
| 1908–1909 | 19 | 15 1/2 | 23 3/4 | 16 1/2 |
| 1907–1908 | 20 1/2 | 17 1/2 | 27 1/4 | 23 1/4 |
| 1906–1907 | 18 1/4 | 17 1/2 | 25 | 22 1/2 |

TABLE V. — *Quotations for tops on the Australasian markets at June, 30th (pence per lb.).*

| Counts (1) | 1909 | 1910 | 1911 | 1912 | 1913 | 1915 | 1916 |
|---|---|---|---|---|---|---|---|
| 70's (fine quality merino) . . . . | 28 1/2 | 29 1/2 | 28 | 27 1/2 | 31 1/4 | 32 1/2 | 46 |
| Super 60's (good merino) . . . . . | 26 1/2 | 28 | 26 1/2 | 25 1/2 | 29 1/4 | 30 1/2 | 44 1/2 |
| Common 60's (ordinary merino) . . | 25 1/2 | 27 | 25 1/2 | 25 | 29 | 30 | 43 |
| 58's (coarse merino fine comeback . | 24 | 25 3/4 | 23 1/2 | 22 1/2 | 26 | 26 1/2 | 40 |
| 56's (c'b'k fine xb.) . . . . . | 21 1/2 | 23 1/2 | 21 1/2 | 20 1/4 | 23 3/4 | 23 3/4 | 36 1/2 |
| 50's (fine quality xb.) . . . . . | 18 1/4 | 20 3/ | 18 1/2 | 17 3/4 | 21 1/4 | 20 1/2 | 33 1/2 |
| 46's (medium quality xb.) . . . . . | 15 | 16 3/4 | 15 1/4 | 14 1/2 | 17 1/2 | 17 1/4 | 28 |
| 44's (rather coarse xb.) . . . . . | 14 | 15 3/4 | 14 3/4 | 14 | 16 1/2 | 16 3/4 | 27 |
| 40's (coarse quality xb.) . . . . . | 12 3/4 | 14 1/4 | 14 1/4 | 13 1/2 | 16 1/4 | 16 1/2 | 26 |
| 36's (Lincoln and Leicester) . . . | 12 | 13 1/4 | 13 1/2 | 13 1/4 | 16 | 16 1/4 | 25 |

(1) The « count » number was originally used to indicate the number of hanks of 560 yds. per *lb.* of worsted yarn. For example:

*lb.* of 40's worsted yarn contained 40 × 560 = 22400 yds. of worsted
» 60's » » » 60 × 560 = 33600 » »

But in actual practice the count number represents the fineness of the fibres rather than the yield of hanks per *lb.* In fact the yarn may be classed as 60's for the thickness of its yarn even if it only yielded 50 hanks per lb. on account of the lack of length and uniformity in the fibres.

1223 – **New and Quick Method of Determining the Age of Eggs.** — GROSSFELD, in *Molkerei-Zeitung*, Year 30, No° 33, pp. 515-517. Hildesheim, August 18, 1916.

A new method has been devised for estimating the age of eggs. It is based on the fact that a new laid egg is heavier than water and that it gradually loses weight as its age advances. The weight of an average sized fresh egg in water is 4.3 gms. and decreases at the rate of 0.6 gm. per week, so that after about seven weeks the egg is of exactly the same density as water and then its weight gradually passes into minus values, as the egg reaches advanced stages of preservation.

By means of a simple areometer, the weight of the egg in water can be determined very quickly. The instrument is made by HUGERSHOFF, GUERBER AND CO., Leipzig and consists of a graduated tube with a metal basket at its base. Having placed the egg in the basket, the whole instrument is immersed in the coldest water available and the weight of the egg in water as well as its age in weeks can be read off directly from the graduations. The whole operation only takes a few seconds so that a large number of eggs can be tested in a short time.

Though the instrument is calibrated for an egg weighing 54.3 gms. and occupying a volume of 50 cc., *i. e.* for an average sized egg, the readings are sufficiently correct for practical purposes with all but very small

or very large eggs. Where however a greater degree of accuracy is required the error due to the size of the egg can be eliminated as follows : the weight of the egg in water is divided by its weight in air and multiplied by 100. The resulting figure is about 8 for a new laid egg and decreases at the rate of 1 per week as the age of the egg advances. For example :

an egg weighing 2 gms. in water and 60 gms. in air would be $8 - \frac{2 \times 100}{60} = 8 - 3.3 =$ between 4 and 5 weeks old.

The areometer also affords an easier means of determining the specific gravity of eggs than by the use of saline solutions. With the figures given above,

$$\text{Specific gravity of egg} = \frac{\text{weight in air}}{\text{weight in air} - \text{weight in water}}$$

$$\frac{60}{60 - 2}$$

$$= 1.034.$$

1224 - **A Study of the Preparation of Frozen and Dried Eggs.** — PENNINGTON M. E., JENKINS M. K., STOCKING W. A., et al. in *United States Department of Agriculture, Bulletin* No. 224, pp. 1-99. Washington, April 28, 1916.

In Bulletin No. 51 (*U. S. Dep. of Agr.*) a report has already been made of the various types of eggs used in the preparation of frozen and dried eggs in the egg-producing districts of the United States. It was shown that in order to obtain the best results a certain proportion of eggs should be stored as « liquid eggs », *i. e.* without their shells. A study of the conditions prevailing in the egg-breaking establishments was next undertaken in cooperation with the factories themselves, the results of which are set out in the present paper. The body of the bulletin gives an outline of the work done and the conclusions which should be of general interest to all connected with the industry. In the appendix are given details of the experiments which may be of use to managers of factories and to chemists and bacteriologists engaged in food investigations.

This report is based on observations made in establishments scattered between northwestern Iowa and central Kansas, during the seasons 1911 and 1912. Tables I and II give a general summary of the results of the bacteriological and chemical examinations of various grades of liquid eggs in three of the factories (D, E, and F,) The grades of eggs mentioned are :

| | |
|---|---|
| « whole eggs » | = eggs merely deprived of their shells. |
| « mixed eggs » | = a product prepared by adding yolks to whole eggs. |
| « leakers » | = eggs with shell and inner membrane broken. |
| « soft eggs » | = eggs whose yolk appears whole before the candle but which breaks when opened. |
| « second grade eggs » | = a product prepared from « drip » and incipient forms of deteriorated eggs. |
| « tanners' eggs » | = is a product made from the rejects of the candling and breaking rooms excluding eggs with a bad odour. It is used for tanning leather. |
| « drip » | = is the liquid egg, mostly white, which collects in the bottom of the breaking tray. |

TABLE I. — *Bacterial counts on liquid eggs.*

| Description of sample | No. of samples | Samples with over 5 000 000 bacteria per gm. | No. of organisms per gm. | | |
|---|---|---|---|---|---|
| | | | Average | Minimum | Maximum |
| | | per cent | | | |
| Whites | 39 | 2.6 | 350 000 | 100 | 7 500 000 |
| Yolks | 54 | 5.6 | 530 000 | 200 | 7 500 000 |
| Whole eggs | 47 | 21.3 | 2 700 000 | 340 000 | 11 000 000 |
| Mixed eggs from D house. | 46 | 0 | 1 000 000 | 5 100 | 3 300 000 |
| » » » F | 12 | 8.3 | 1 700 000 | 470 000 | 6 800 000 |
| Leaking eggs | 53 | 5.9 | 1 300 000 | 500 | 6 000 000 |
| Soft eggs | 13 | 46.1 | 20 000 000 | 130 000 | 80 000 000 |
| Second-grade eggs | 14 | 92.8 | 35 000 000 | 4 200 000 | 92 000 000 |
| Tanners' eggs | 10 | 100 | 76 000 000 | 31 000 000 | 150 000 000 |

TABLE II. — *Chemical tests on liquid eggs.*

| Description of sample | No. of samples | Ammoniacal nitrogen | | | | | | Percentage of moisture | | |
|---|---|---|---|---|---|---|---|---|---|---|
| | | Per 100 parts wet weight | | | Per 100 parts dry weight | | | | | |
| | | Average | Min. | Max. | Average | Min. | Max. | Average | Min. | Max. |
| Whites | 13 | 0.0004 | 0.0002 | 0.0006 | 0.0031 | 0.0016 | 0.0049 | 87.37 | 86.96 | 88.31 |
| Yolks | 23 | 0.0032 | 0.0024 | 0.0045 | 0.0076 | 0.0054 | 0.0103 | 57.88 | 53.64 | 64.06 |
| Sugared yolks | 7 | 0.0030 | 0.0028 | 0.0033 | 0.0062 | 0.0058 | 0.0067 | 51.12 | 49.89 | 53.07 |
| Whole eggs | 43 | 0.0021 | 0.0016 | 0.0024 | 0.0074 | 0.0054 | 0.0087 | 72.33 | 70.23 | 74.17 |
| Mixed eggs from D house | 34 | 0.0020 | 0.0014 | 0.0025 | 0.0067 | 0.0046 | 0.0082 | 68.88 | 68.33 | 71.43 |
| Mixed eggs from F house | 10 | 0.0023 | 0.0017 | 0.0027 | 0.0071 | 0.0053 | 0.0082 | 68.06 | 67.00 | 70.81 |
| Leaking eggs | 37 | 0.0020 | 0.0013 | 0.0028 | 0.0065 | 0.0047 | 0.0080 | 69.63 | 64.12 | 72.83 |
| Soft eggs | 11 | 0.0023 | 0.0018 | 0.0031 | 0.0080 | 0.0066 | 0.0098 | 71.24 | 67.04 | 72.99 |
| Second-grade eggs and drippings | 14 | 0,0024 | 0.0008 | 0.0040 | 0.0108 | 0.0052 | 0.0182 | 78.20 | 71.79 | 84.60 |
| Tanners' eggs | 9 | 0.0041 | 0.0021 | 0.0069 | 0.0133 | 0.0074 | 0.0219 | 69.98 | 65.06 | 71.89 |

The average number of bacteria per gm. in the whites was 350.000, in the yolk 530 000 and in the whole and mixed eggs 1 800 000. The average amount of ammoniacal nitrogen was 0.0031 per cent of the dry matter in the whites, 0.0076 per cent in the yolks and 0.0074 per cent in the whole eggs. A comparison of these results shows that the average count of the whites is about half that of the yolks and that the latter contained approximately one third as many bacteria as the whole and mixed egg. The antiseptic action of the white may explain its lower bacterial content as compared with that of the yolks, whole eggs and mixed eggs. It may

be that the presence of soft eggs in the whole and mixed eggs offers also an explanation of their higher bacterial content.

It is interesting to note that the average count of the product prepared from leaking eggs is not different from that of whole and mixed eggs. The average count of the former was 1.300.000 and for the latter 1.800.000. The amount of chemical decomposition was no greater in the leaking eggs than in the whole and mixed eggs.

The product prepared from soft eggs graded as fit for food purposes contained decidedly more bacteria than the whole or mixed egg, but the amounts of ammoniacal nitrogen in the two were not so very far apart. The average number of organisms in the soft eggs numbered 20 000 000 per gram, as compared with 1 800 000 in the whole and mixed egg, whereas the percentage of loosely bound nitrogen averaged 0.0080 in the former and 0.0074 in the latter. The bacteria in the soft eggs were not present in sufficient numbers or for a sufficient length of time to affect a decomposition of the egg material. On the other hand the second grade frozen egg prepared from « beginning sours », (*i. e.* eggs with light-green whites and the tanners' eggs were not only heavily infected but were decomposed. The average number of bacteria in the former was 35 000 000 per gm. and in the latter 76 000 000. The amount of ammoniacal nitrogen was 0.0108 per cent in the second-grade egg and 0.0133 in the tanners' eggs. The comparative data, together with the practical observations of the eggs used in the former product, show very conclusively that second-grade canned or dried eggs are unfit for food purposes.

As the houses under observation during 1912 were three of the largest producers of canned and dried eggs in the United States, it is instructive to compare the quality of their output as indicated by its bacterial content with that offered for sale for food during the two years previous to the investigation. STILES and BATES (*Bureau of Chemistry, U. S. Dep. of Agr. Bulletin* No. 158) found in a study of 312 samples of frozen eggs collected from different sources during the years 1909 to 1911, inclusive, that 58.3 per cent contained over 10 000 000 bacteria per gram. Of 216 samples of liquid eggs obtained from the cooperating houses during this investigation in 1912, only 1.4 per cent were found to contain over 10 000 000 per gram. The maximum count in the three houses in 1912 was 11 000 000 per gram, while the maximum found by Stiles and Bates was 1 180 000 000.

The difference in the bacterial count of the samples of dried eggs was equally as marked. Stiles and Bates found that 83.3 per cent of the samples purchased on the open market contained over 10 000 000 per gram. Only 6.3 per cent of 46 samples taken in E house contained over this number, while in F house 55.3 per cent of the samples were in excess of 10 000 000. The maximum number per gram found in the samples of dried eggs taken in 1912 was 20 000 000 for E house and 200 000 000 for F house, and in the samples collected between 1909 and 1911 by Stiles and Bates 210 000 000 It is known in the case of F house that the raw material was of good quality and that the bacteria increased during desiccation.

The samples studied by Stiles and Bates represented not only frozen

and dried eggs prepared from good eggs by the best methods known at the time, but also products made from unfit raw material. These comparative data speak well for the quality of the product prepared by the new methods in the three houses under investigation.

## CONCLUSIONS.

1) Eggs commonly used for breaking stock by reputable firms are small and oversized eggs, dirty and cracked eggs, and shrunken eggs.

2) In order to check deterioration, the eggs should be held in chilled surroundings before and during the process of candling, breaking, and mixing preparatory to freezing or drying. The temperature of the store room should not be higher than 0° to 1°C., that of the candling room 10° to 13°C., that of the breaking room 15° to 18°C.

3) All eggs, even during the spring months, should be candled previous to breaking.

4) In order to insure well candled eggs going to the breaking room, the system of candling should be such that the work of the individual candlers is checked.

5) In order to prevent waste, the eggs difficult to grade should be set aside by the regular candlers to be recandled by an expert.

6) All eggs used in the preparation of frozen and dried eggs should be graded out of the shell as well as by the candle, because certain heavily infected eggs, such as sour eggs and eggs with green whites, can only be detected when broken.

7) In order to insure a good product, bacterial cleanliness and careful grading must be obtained during the process of preparation.

8) The fingers of the breakers should be kept dry and clean.

9) In order to prevent waste and to insure good grading, not more than three eggs should be broken into a cup before emptying.

10) Good eggs should not be saved when a bad egg has been broken into a cup with them.

11) White and yolk are contaminated less by the mechanical than the shell method of separation. Only clean eggs should be separated by the latter process.

12) The percentage of « rots » rejected on candling and the number of organisms in the liquid egg increase as the season advances.

13) Canned eggs with the majority of samples having counts of less than 5 000 000 bacteria per gram, and with 100 000 *B. coli* or less can be prepared in the producing section from regular breaking stock, provided strict cleanliness and careful grading have been observed. The ammoniacal nitrogen will very seldom be over 0.0087 per cent of dry matter.

14) A second-grade frozen product prepared from eggs showing incipient decomposition to the senses, such as « beginning sours » and eggs with green whites are not only heavily infected but chemically decomposed. These eggs are unfit for food purposes.

15) Only two grades of canned eggs should be prepared when grading eggs out of the shell, namely, food egg and tanners' egg.

16) Leaking eggs handled on special trays between candling and breaking room and graded carefully are as fit for breaking as regular breaking stock.

17) Tanners' egg contains markedly larger numbers of bacteria and larger amounts of ammoniacal nitrogen than does food egg.

18) The control of the supply of air to drying belts to prevent saturation from the liquid egg is an important factor in preventing multiplication of bacteria in the product during the process of desiccation.

19) The amount of ammoniacal nitrogen in desiccated egg is not a reliable index to the quality of the raw material from which it is prepared, because this substance is volatilized unevenly during the process of desiccation.

20) The following eggs should be discarded during grading : Black, white, mixed and sour « rots », eggs with green whites, eggs with stuck yolks, musty eggs, mouldy eggs, « blood rings », eggs containing diffuse blood, and eggs with abnormal odour.

# PLANT DISEASES

## DISEASES NOT DUE TO PARASITES OR OF UNKNOWN ORIGIN.

1225 - **Mottle-Leaf of Citrus Trees in Relation to Soil Conditions.** — LYMAN, J., BRIGGS J. C. A., and Mc LANE J. W., in *Journal of Agricultural Research*, Vol. VI, No 19, pp. 721. 739, Pl. XCVII. Washington, D. C., 1916.

Mottle-leaf of Citrus trees is characterised by the disappearance of the chlorophyll from parts of the leaf beginning at the points which are furthest away from the mid-rib and the larger veins. As the alteration progresses the yellowish spots increase in size, and finally unite, until the only remaining chlorophyll is confined to narrow areas along the veins. In advanced stages there is a marked decrease in the size, quality and yield of the fruit. No organism has as yet proved to be associated with this condition, but it is generally stated that the nematode *Tylenchulus semipenetrans* Cobb (1) is widely distributed in districts infected with mottle-lead.

Mottle-leaf is found in most Citrus fruit plantations in California, but it is more prevalent in some districts than in others. All the Citrus fruits grown in California are affected, including the Washington Navel, Thompson Improved Navel, and Valencia orange, grapefruit, tangerine and lemon.

Other conditions being equal, the buds grafted on to *C. aurantium* are more susceptible than those grafted on to *C. sinensis*; in a mixed grove of Washington Navel and Valencia oranges both varieties were equally attacked.

Orchards manured with organic substances, such as stable manure or clover crops, usually did better than those treated with chemical fertilisers. In the latter case the changes induced are always more extensive than when nitrate of soda alone is employed.

The experiments in question indicate that the origin of the disease must be sought in the conditions of growth and more especially in the

(1) See *B.* July 1915, No. 776. (*Ed.*).

chemical composition of the soil. The conclusions are based upon a field and laboratory study of 130 orange groves and 45 lemon groves mainly situated in Riverside and San Bernardino Counties, California. The percentage of mottled leaves was determined by examining 10 to 12 typical trees in each grove. A soil sample 3 feet in depth was taken near each tree, each foot sample being kept separately. These samples were analysed, for humus, organic carbon, mineral carbonates, bicarbonates and total nitrogen. The most striking results are shown in Tables I and II.

The moisture equivalent is a measure of the moisture retentiveness of a soil, and is numerically equal to the percentage of moisture which a given soil is able to retain in opposition to a centrifugal force 1000 times that of gravity. The finer the soil particles the greater is the moisture equivalent.

The following facts can be gleaned from tables I and II :

TABLE I. — *Analysis of orange grove soils, grouped according to percentage of mottled leaves, each group containing about 20 groves.*

| Group | Percentage of — | | | | | Ratio of — | | | | Moisture equivalent | Mottled leaves |
|---|---|---|---|---|---|---|---|---|---|---|---|
| | Humus | Total nitrogen | Organic carbon | Mineral carbonates | Mineral bicarbonates | Humus to lime | Carbon to humus | Nitrogen to humus | Nitrogen to carbon | | |
| 1 | 0.119 | 0.036 | 0.237 | 0.069 | 0.023 | 1.72 | 2.50 | 0.303 | 0.152 | 11.3 | 88 |
| 2 | 0.142 | 0.036 | 0.256 | 0.066 | 0.024 | 2.15 | 1.54 | 0.254 | 0.141 | 12.4 | 64 |
| 3 | 0.170 | 0.039 | 0.254 | 0.093 | 0.026 | 1.83 | 1.67 | 0.229 | 0.154 | 11.6 | 43 |
| 4 | 0.165 | 0.039 | 0.255 | 0.080 | 0.027 | 2.06 | 1.65 | 0.237 | 0.153 | 12.6 | 19 |
| 5 | 0.244 | 0.039 | 0.261 | 0.068 | 0.020 | 3.59 | 1.93 | 0.159 | 0.149 | 11.9 | 8 |
| 6 | 0.204 | 0.038 | 0.263 | 0.079 | 0.028 | 2.58 | 1.78 | 0.186 | 0.144 | 12.8 | 1 |

TABLE II. — *Analyses of lemon grove soils, grouped according to percentage of mottled leaves, each group including 8 groves.*

| Group | Percentage of — | | | | | Ratio of — | | | | Moisture equivalent | Mottled leaves |
|---|---|---|---|---|---|---|---|---|---|---|---|
| | Humus | Total nitrogen | Organic carbon | Mineral carbonates | Mineral bicarbonates | Humus to lime | Carbon to humus | Nitrogen to humus | Nitrogen to carbon | | |
| 1 | 0.066 | 0.036 | 0.241 | 0.062 | 0.023 | 1.06 | 2.74 | 0.545 | 0.149 | 10.1 | 92 |
| 2 | 0.081 | 0.033 | 0.258 | 0.050 | 0.024 | 1.64 | 3.18 | 0.407 | 0.128 | 10.6 | 87 |
| 3 | 0.087 | 0.037 | 0.265 | 0.073 | 0.029 | 1.19 | 3.05 | 0.425 | 0.139 | 11.8 | 82 |
| 4 | 0.072 | 0.033 | 0.237 | 0.097 | 0.029 | 0.74 | 3.29 | 0.458 | 0.139 | 11.0 | 76 |
| 5 | 0.070 | 0.033 | 0.253 | 0.089 | 0.029 | 0.79 | 3.61 | 0.471 | 0.126 | 11.8 | 58 |

The results of the soil analyses show that in the case of the oranges there is a marked inverse correlation between the humus content of the soil and the percentage of mottling, the latter tends to diminish as the humus content increases. A statistical study of the data shows that 50 per cent of the cases of mottling can be accounted for by the low humus content of the soil. The humus content of the lemon soils studied averages less than 0.1 per cent, an amount which is too small to produce a normal growth, and which is nearly always associated with mottling.

No correlation was found between the proportion of mineral carbonates in the soil and mottling; it was noticed that in lemons the mottling decreased slightly as the mineral carbonates increased, but the changes were so slight that it cannot really be considered as a case of correlation. In all the soils examined the lime content is low, and its application in large quantities benefits lemon trees more than orange trees, more especially when the soil is rich in humus.

There is no relation between the total nitrogen and mottle-leaf either in oranges or in lemons. The greater the proportion of organic carbonates with regard to the humus, the more the leaves of the tree are attacked; and in the same way, the more proportion of humus is raised the more the disease is checked. This does not prove that humus is the organic substance best fitted to give rise to the development of healthy and normal leaves, but it shows that in a soil which is able to convert organic matter into humus, the organic matter, during the process of decomposition, passes through stages when it is very readily absorbed by the plant roots. Addition of organic substances which can readily be assimilated to the soil is therefore suggested as a new means of checking the attacks of mottle-leaf.

## DISEASES DUE TO FUNGI, BACTERIA AND OTHER LOWER PLANTS.

GENERALITIES

1226 - **Climatic Conditions as related to *Cercospora beticola*.** — Pool, V. W., and Mc Kay, M. B., in *Journal of Agricultural Research*, vol. VI, n. 1, pp. 21-60, fig. 1-10, Pl. III-IV. Washington, D. C., 1916.

Experimental work on the subject in hand leads to the following conclusion:

1) The life of the fungus *Cercospora beticola* wintering in sugar-beet top material varies according to the environment. When exposed to outdoor conditions the conidia die in one to four months; but when kept dry they live as long as eight months. The sclerotia like bodies, which are more or less embedded in the tissues of the host, are more resistant than the conidia, living through the winter when slightly protected, for example, in the interior of a pile of sugar-beet tops or buried in the ground at a depth of 1 to 5 inches, and become a source of infection for the succeeding crop. Notwithstanding the difference in temperature and soil moisture condi-

tions similar results were obtained from wintering experiments at Rocky Ford, Colorado and Madison, Wisconsin.

2) Climatic conditions and the development of the leaf spot can only be correlated when all records are taken at the same relative positions, as shown by comparison of the Weather Bureau records and the records taken among the plants and 5 feet above the field.

3) The maximum temperature early in the season is much higher near the ground than it is 5 feet above, but the difference diminishes as the season advances.

4) Throughout the season the maximum humidity was higher among the leaves than 5 feet above the field. Early in the season while the plants were small the humidity remained above 60 longer each day at 5 feet above the field than among the plants near the ground; but after the plants attained a good size this condition was reversed. Because of this difference only records collected among the leaves should be considered in correlating climatic conditions and conidial production and infection.

5) The effect of rainfall and irrigation on the increase of relative humidity and its duration is apparently much the same.

6) Thermal tests with artificial cultures showed that:

*a*) exposure to constant temperatures of 35° and 36° C. is fatal to to the growth of the fungus;

*b*) growth occurred when cultures after exposure for 3 days to either of these temperatures, were changed to 30.8°, and also when they were held at either for 8 hours and then at 20° for 16 hours;

*c*) a temperature of 40.5° was fatal in all combinations tested.

7) Temperature and relative humidity influence the production of conidia and infection in much the same way. A temperature of 80° to 90° F., with a night minimum preferably not below 60°, is most favourable to conidial production, while it is checked by a temperature of 100° or more, and is greatly checked by a range from below 50° to 80°. A maximum humidity ranging above 60 for not less than 15 to 18 hours each day induces a good growth of the fungus.

8) Because of the greater degree of moisture on the lower than on the upper side of the leaf the conidia are generally more abundant on the lower surface of the spots, but because of the action of rain and wind they disappear more rapidly from the upper surface.

1227 - **The Susceptibility of *Phaseolus vulgaris* to Haricot Rust (*Uromyces appendiculatus*)** (1). — JORDI, E., in *Zeitschrift für Pflanzenkrankheiten*, Vol. 26, Nos. 6-7, pp. 374-375. Stuttgart, Sept. 16, 1916. RESISTANT PLANTS

In 1915 the writer cultivated 5 varieties of *Phaseolus vulgaris* (Ohne Gleichen, Blaue Speck, Sans Viacre, Phänomen, Klosterfrauen). The three first were grown in one field, and the other two together with the first one, in a second field.

The second field, 98 yards long by 27 yards wide, was divided into three

(1) See *B.* August 1916, n. 933. (*Ed.*).

equal parts, the first being planted with Phänomen, the second with Klosterfrauen and the third with Ohne Gleichen. By September 15, 1915 the writer had been able to prove that Phänomen was very severely attacked by rust, while Klosterfrauen on the next plot was attacked very slightly. The third plot planted with Ohne Gleichen behaved exactly like the first.

The first field planted with the three first mentioned varieties was attacked fairly severely all over.

1228 – **The Resistance of Lucerne to *Pseudopeziza Medicaginis* in Uruguay Attributed to the Use of Nitragin.** — See No. 1180 of this *Bulletin*.

DISEASES OF VARIOUS CROPS

1229 – **Diseases and Insect Pests which Attack Rice in Java.** — RUTGERS, A. A. L., in *Teysmannia*, Year 27, No. 6, pp. 313-342. Batavia, 1916.

Rice in Java is very considerably damaged by diseases and enemies of one sort or another. For the last four years the total loss of plantations was estmated at an average of 242 172 acres. In addition there is a considerable loss due to the decreased productivity when the rice is attacked by insects. In 1912 complete failure of the crop was caused in several parts of the island by insects. The monetary loss was estimated at about L. 200 000.

Although most of the diseases and pests have been fully investigated, the relations that exist between the methods of cultivation and the attacks of the pests still require further study so that means of suppressing the latter can be discovered.

Most of the mischief is done by insects; fungal diseases are not of of any great importance. Diseases due to climate or to soil conditions sometimes play quite a large part.

The following pests are mentioned: 1) « Omo Mentek », root rot caused by shortcomings of the soil; to combat this disease improvement of the soil by cultivation should be aimed at; above everything stagnant water should be avoided, as it encourages de-oxidation of the soil; 2) « Omo Djenoe », caused by *Tilletia horrida*, only once seen in Java without doing much harm; 3) « Djamoer Parah », caused by *Ustilaginoidea virens*; the cases observed are rare and the losses inconsiderable: 4) blotches on the leaves are caused by *Napicladium*, *Helminthosporium* and *Piricularia* spp.; it remains to be proved whether the attacks of these fungi can result in a total loss of the plant; 5) *Sclerotium Rolfsii* which sometimes leads to the loss of several leaves; 6) « Omo Wereng », caused by the *Cicadellidae* or by the *Delphacinae*, which can result in serious losses; the insects attack the flowering stems which in consequence produce no caryopsis; 7) « Omo Walang sangit », caused by *Leptocorisa acuta*; this insect attacks the young grains and sucks out their contents; the loss can be considerable; 8) « Omo Lembing », caused by *Antestis histrio* (*Pentatomidae*) or by *Nezara viridula*, *N. griseipennis* and *Podops vermiculatus;* these insects by attacking the stems prevent the ripening of the caryopsis; 9) « Omo Soendep », caused by *Schoenobius bipunctifer* or by *Scirpophaga sericea*, *Sesamia inferens* or *Chilo* sp., all these insects make their way into the flowering stems where the larvae bring about a total loss; «Omo Soendep » is one of the

worst enemies of rice cultivation in Java; 10) « Omo Poetih », caused by *Nymphula stagnalis* or *Cnaphalocrocis jolinalis*, these insects attack the leaves which they feed upon; to destroy them it is only necessary to flood the rice plantations; 11) several other insects such as *Cirphis unipunctata*, *Psalis securis*, *Melanitis leda* and some of the *Hesperidae*, which also feed upon the leaves and at times do a good deal of damage; 12) *Tinea* sp. which can lead to serious losses in stored rice; 13) *Cecidomyia* sp. and another Dipteran hitherto unidentified which sometimes attack the nurseries; 14) *Calandra oryzae*, which attacks shelled rice; 15) among the mammals are rats which can do a great deal of harm in the plantations, and birds also, especially *Munia oryzivora* which is a perpetual source of danger, necessitating a continuous watch being kept in the plantations when they are dry, so that the intruders may be driven off.

1230 – **On the Reappearance of Mildew (*Phytophthora infestans*) in the Haulm of the Potato.** — ERIKSSON, J., in *Comptes rendus hebdomadaires des Séances de l'Académie des Sciences*, Vol. 163, No. 4, pp. 97-100. Paris, 1916.

The writer has drawn the following conclusions from his further investigations of *Phytophthora infestans*:

1) In the field the disease does not appear until 3 or 4 months after the tubers are planted. In Sweden the first attack varies from the middle of July to the end of September according to the weather.

2) In the first outbreak of the disease which comes at the end of the summer the leaves are seen to have large, distinct, black patches especially the more vigorous ones which spring from the base of the plant, at the same time the lower surfaces are covered with a fine greyish dust. At the end of 2 or 3 days the black patches begin to invade the tubers. Damp and misty weather encourages the growth of the fungus.

3) Where the tubers are planted in frames in January the first traces of the disease appear in the middle of April when the stems and leaves are fully developed. The tubers are at this time as well developed as are those of field grown potatoes at the end of the summer.

4) After the early appearance of the fungus in the tubers in hotbeds the stems and the petioles are invaded and take on a greyish colour. The petioles often become thread-like but the blades remain green without showing any sign of the disease.

5) On the first day several zones can be distinguished in the diseased patches. Starting from the middle and radiating outwards there are: *a*) a dark brown region verging upon black; *b*) a velvety grey region; *c*) a pale yellow region free from rust; *d*) a region of healthy dark green which lies about 10 mm. away from *b*.

6) In the dark green region and in the adjoining pale green part the cells are normal, with nuclei, chlorophyll grains etc. Only the cytoplasm of the cell differs from normal cytoplasm.

With the help of powerful magnification the presence of black spots in the plasma between the chlorophyll grains has been shown. No other trace of the mycelium has been discovered either in the cells or in the adjoining spaces.

7) In the primary phases the structure of the cytoplasm of the cell undergoes changes. The grains of chlorophyll are on the verge of disintegration (chlorophyll disintegration phase) and at the same time the plasma itself is granular.

8) In the following phase the structure of the cytoplasm alters: the chlorophyll grains are broken down, the whole mass of plasma seems to be more granular and contains numbers of nucleoli (4 to 6) (nucleolar phase). As a result of the disintegration of the chlorophyll the leaves turn black.

9) This phase is followed by another in which greater changes come about. The plasmic granules gather together in certain parts of the cell, especially in the palisade tissue of the parenchyma. The plasmic mass often lies within them. Sometimes the collection of granules is found in the middle or it may lie towards the wall nearest to the epidermis. The nucleoli are replaced by cytoplasmic granules of irregular shapes (maturation phase).

10) The plasma within the diseased cell from the very beginning is of two kinds: there is the plasma of the host and that of the fungus. They are intimately mingled and form a symbiotic association which, inherited from the parent plant, spreads from cell to cell. The writer speaks of this plasmatic association as « mycoplasma ». At a certain stage in the development of the nurse-plant a struggle begins between the two, which ends in a victory for the fungus.

11) At this time the plasmic body leaves the cell and penetrates into the intercellular spaces where it begins to form the mycelium. The plasma bores through the cell wall where the granules are specially thick (mycelial stage).

The plasmic mass becomes filamentous, the filaments being either simple or branched, according to the size and shape of the intercellular space. If the plasmic mass makes its escape at the outer end of a palisade cell it becomes a fine thread which gets in between the epidermis and the cells below. At the inner end one often sees a large vesicle entirely or partly empty, its contents having been discharged into the filament.

12) The development of the mycelium seems to proceed in two directions; some remain thin and show separate nucleoli. Some of these break off from the filament as separate structures and develop into oögonia. The writer distinguishes these filaments as female. Other of the filaments increase in size and their contents are evenly distributed throughout their length. These strands branch irregularly and often give rise to forks which may develop into antheridia. These are described as male filaments.

13) Fertilisation occurs between the ripe antheridia and oögonia giving rise to an oospore. The oospores appear either singly or joined in twos and threes in the disorganised cellular tissue of the diseased patch. They are spherical, 20 $\mu$ to 38 $\mu$ in diameter, with thick, smooth walls.

14) The oospores can germinate as soon as they are formed. They are in no sense resting spores to insure the survival of the fungus after the winter, but true summer spores whose life has a very definite duration.

15) Having reached the inner opening of a stomate the oospores develop giving rise to two or three fine branches which emerge by the stomate. As soon as these filaments are formed they can produce a terminal spore, ovoid or lemon-shaped, which can also develop into a longer filament with branches. Then the conidia are borne on the ends of the branches (terminal spores) or in little swellings of the filament (lateral spores).

16) The first conidia germinate as do the sporangia. Their contents are differentiated into 8 distinct zoospores which are freed through an opening in the apex of the sporangium; they can begin their development as soon as they are formed. The whole evolution, from the disintegration of the chlorophyll grains of the cell host to the time when the zoospores are liberated, is probably accomplished in one day. The fungus is propagated after this stage by the zoospores.

1231 – **The Disease of Potatoes known as "Leak", caused by *Rhizopus nigricans* and *Pythium de Baryanum*.** — HAWKINS, L. A., in *Journal of Agricultural Research*, Vol. VI, No 17, pp. 627-640, Fg. 1, Pl. XC. Washington, D. C., 1916.

The tuber-rot of potatoes known as potato « leak » is a disease of considerable importance in the delta region of San Joaquin River in California, where potatoes are cultivated on a very large scale. As a rule the disease appears soon after harvesting, in the hot weather, in warehouses and during transport and it often ruins whole shipments. No exact data could be collected as to the losses but in 1915 for an area of 400 000 acres the loss probably lay between £. 10 410 and £. 31 250.

The first sign of the disease is the appearance of a small brown discoloration around a wound of some kind, such as is easily made with a hoe. In more advanced stages the entire surface of the potato is discoloured, the tissues soften and shrivel; if tubers in this condition are crushed a brownish watery liquid oozes out.

Although *Rhizopus nigricans* Ehren. can produce a tuber-rot similar to that occuring in leak, this fungus has not been isolated in field experiments from tubers affected with leak. In numerous cases *Pythium de Baryanum* Hesse has been isolated and must be regarded as the most common specific cause of the disease; inoculation experiments have given positive results. The mycelium is irregularly branched, with conidia borne either terminally or intercalarly, they are spherical with an average diameter of 22 $\mu$. They germinate as soon as they are placed in water at the ordinary room temperature. The oogonia are spherical and vary from 15 to 25 $\mu$ in diameter. The antheridia either occur on the same filament with the oögonia or on an adjacent filament. The oospores are smooth, spherical and thick-walled, with an average diameter of 16 $\mu$.

*Pythium de Baryanum* is common throughout the delta region of the San Joaquin River, and if infected soil is placedincont act with wounded tubers they are readily infected with the disease. As a great many of the injuries are probably inflicted with the hoe when the potatoes are dug, great care in digging is recommended, and a careful sorting out of all the wounded tubers.

1232 - ***Fusarium oxysporum* and *F. tricothecioides* in their Relation to Tuber-rot in Potatoes.** — LINK, G. K. K., in *The Botanical Gazette*, Vol. LXII, No 1, pp. 169-209,, Fg. 1-13. Chicago, Ill., September 1916.

*Fusarium oxysporum* Wilcox and Link is identical with *F. trichothecioides* Woll.

Tuber-rot and decay of the whole plant are produced by F. *oxysporum* in the same way as by *F. trichothecioides*. The withering of the haulm is due to the destruction of the roots and the blocking of the xylem elements in the stem; in mild cases the disease is characterised by such symptoms as discolouration and drooping of the leaves and by the appearance of aerial tubers.

In the conditions that one meets with in the field and in stores *F. oxysporum* seems to be more definitely the cause of decay than is *F. trichothecioides*, while the latter appears to be responsible for rot in the tubers. The optimum and maximum temperatures for *F. oxysporum* are higher than those for *F. trichothecioides* which develops well from 8° to 10° C. These facts can in part explain the different effects of the two fungi. *F. oxysporum* increases and spreads more rapidly than *F. trichothecioides*, a circumstance which can be correlated with the greater need for oxygen shown by *F. oxysporum*, and which explains why the fungus invades the xylem elements.

The two species both possess marked powers of utilising organic matter of all kinds in their metabolism. *F. oxysporum* has this faculty in the greater degree and can make use of more varied substances than can *F. trichothecioides*, but the destruction of the organic matter is not so complete.

The growth in *F. oxysporum* is less readily arrested than is the case in *F. trichothecioides*. Solanine is not toxic to either species, although in the case of *F. trichothecioides* it seems to check the growth.

1233 - ***Urophlyctis Alfalfae* on Lucerne ("tumeurs marbrées") in France.** — ARNAUD, G., in *Journal d'Agriculture pratique*, Year 80, N. S., Vol. 29, N. 17, pp. 291-292, fig. 58. Paris, August 1916.

The Station of Plant Pathology in Paris received specimens of lucerne from Villepreux (Seine-et-Oise) which were attacked by *Urophlyctis Alfalfae* at the base of the stems.

The soil of the fields from which the specimens were taken was dry and permeable and owing to the lack of water was not really suitable for lucerne. The disease had developed irregularly. To check the disease it is best to plough up the lucerne in infected fields and replace it by some other crop.

1234 - ***Stilbella Heveae* and *Ustulina zonata*, Pests on Rubber in Sumatra.** — VRIENS, J. G. C., in *Mededeelingen van den Adviseur der A. V. R. O. S.*, No. 5, pp. 66-68. Médan, 1916.

The mycelium of *Stilbella Heveae* spreads out into fine white threads over the young shoots and leaves of the rubber tree. Soon the leaves which have been attacked lose their colour and die, and are left hanging on to the branches by threads of the mycelium.

The writer has been able to show that the disease can be stamped out

by gathering together and burning the infected stalks and leaves. The damage caused by the disease is comparatively insignificant.

In the same paper there are reports of two cases of *Ustulina zonata* on rubber at Deli (Sumatra).

In the Federated Malay States this fungus does a great deal of harm in rubber plantations as SHARPLES has recently stated (1). It attacks the wood, having effected its entrance by means of the holes made by mining insects or by other wounds. This disease is probably very contagious.

As a means of prevention the writer advocates the removal of all dead wood that could shelter insect pests from the plantation.

1235 - ***Botrytis* (*cinerea*?) and *Rhizopus* (*nigricans*?) as the cause of Rot in Strawberries in the United States.** — STEVENS, N. E., in *Journal of Agricultural Research*, Vol. VI, No. 10, pp. 361-366, Pl. XLIX-L. Washington, D. C., 1916.

Strawberries sent out from the Southern States are very often spoilt by *Botrytis* (*cinerea*?) and *Rhizopus* (*nigricans*?), which cause rot during shipment and on the market. The pathological processes are very different in the two cases.

*Botrytis* sp. — The mycelium penetrates into all parts of the berry it fills up the intercellular spaces with a network of hyphae which surrounds the cells and tissues so that the berry keeps its shape and only undergoes a slight shrinkage without much loss of juice.

The hyphae readily dissolve the middle lamella and are able to penetrate into the cells where they very quickly bring about the disintegration of the proptoplasmic contents so that the nucleus can no longer be distinguished.

*Rhizopus* sp. — The berries become flattenend and there is a considerable loss of juice. The mycelium of the parasite normally develops quite near the surface of the berry in the outer 6 or 8 cell layers, and only very rarely does it make its way into the cells.

The nuclei of the cells persist in apparently normal condition until the cytoplasm has almost entirely collapsed. Under very dry conditions (a dessicator with concentrated sulphuric acid) *Rhizopus* sp. develops to such an extent that it extends to the middle of the berry; in this case the hyphae are often found inside the cells.

It is rare to find both parasites in the same berry. But often *Botrytis* sp. is found with *Fusarium* sp. or with *Alternaria* sp., or *Rhizopus* sp. is found with *Fusarium* sp. In these cases the two mycelia mingle in the tissues of the berry, but they may also occupy two distinct zones with a marked line of division as is the case with *Botrytis* sp. and *Alternaria* sp.

It is possible that *Rhizopus* sp. can occur in a region originally infected by *Botrytis* sp. or by some other fungus. The writer's researches however point to the conclusion that *Rhizopus* sp. is not dependent upon the presence of any other fungus in its attacks on strawberries during shipment or on the market.

---

(1) See *B.* July, 1916, N° 812. (*Ed.*)

## WEEDS AND PARASITIC FLOWERING PLANTS.

1236 – **Researches on the Dodder of Flax (*Cuscuta Epilinum*) in Germany.** — OBERSTEIN, in *Illustrierte landwirtschaftliche Zeitung*, Year 36, No. 78, pp. 525-526. Berlin, Sept. 27, 1916.

Hitherto dodder has only appeared to a slight extent upon flax in Germany. In the literature of the subject there are records of its appearance in large quantities in Saxe-Altenbourg (1904), in Bavaria (1905-06) in the Grand-Duchy of Reuss, in West Prussia and in Posnania (1908). During the last year it has also been reported from Silesia having probably been imported with flax from Russia (1).

The writer profited by this opportunity to investigate the germination of the seeds and the question of their different plant hosts. The work was carried out in the Seed Testing Station of the Silesian Chamber of Agriculture. On 13 April 1916, 100 seeds of dodder were sown and allowed to germinate in 4 sets of sterile sand. After 3 days 29, 30, 19 and 39 per cent of the seeds had begun to germinate; 3 days later the percentages were increased by 15, 15, 19 and 5 respectively; 10 days after sowing the percentages of seeds which had germinated were 45, 48, 51 and 44. A germination experiment carried out at the same time with *C. Trifolii* and *C. racemosa*, but using the method employed for clover, gave the following results: with *C. Trifolii* the maximum number of seeds which had germinated after 24 hours was 2 per cent; while with *C. racemosa* the percentages were 4, 8, 4 and 9 after 5 days and 18, 25 16 and 26 respectively after 24 days.

All these experiments therefore confirm the opinion which is generally held, namely, that the dodder of flax, owing to its relatively high germination, is well adapted to the short duration of its principal plant host.

Pot experiments with dodder seeds gave flourishing plants from June and July onwards; they developed equally well on red clover and on flax, although the former appears to suit them less well. The red clover however suffered less than did the flax which was often completely choked during the course of its growth. Good flowers were only obtained when the flax was slightly attacked by dodder. The dodder flowers equally well on red clover and on flax if the pots are watered from time to time.

Dodder which was grown on red clover produced ripe seeds just as it does on flax. Ripe seeds were also obtained from dodder on *Lathyrus Aphaca* and on *Vicia hirsuta*, which had accidentally found their way into the pots with the flax.

The results embodied in this paper are not in entire agreement with those obtained by previous workers so that further work upon the subject is still required.

(1) See *B.* January, 1913, N° 75. (*Ed.*).

1237 – **Seeds of Weeds and of Cryptogamic Diseases observed in Sowing Cereals from the Maritime Province of Eastern Siberia.** — See N° 1174 of this *Bulletin*.

1238 – **An Attempt to Destroy Wild Mustard (*Brassica Sinapistrum*), in Fields of Cereals.** — DUSSERRE, C., in *Travaux de Chimie alimentaire et d'Hygiène*, Vol. VII, Part 6, pp. 357-358. Berne, 1916.

In order to replace the sulphates of iron and copper, and powdered kaïnite, which have been used hitherto to destroy wild mustard and are now expensive and difficult to procure, the writer made experiments in spraying with a 20 to 30 per cent solution of potassium chloride, which can be procured in sufficient quantities at its original price. Trial was made on April 28, 1916 on an oat field at Ecublens (Vaud), which was overgrown with wild mustard, the plants having 2 or 3 leaves unfolded. The result was very satisfactory: the plants touched by the liquid were completely shrivelled up; the few which had received less of the solution withered and appeared to be very sickly. The field in this way was cleared of this weed and the oats developed vigorously. Plants of *Ranunculus scleratus* which were common in the field were also destroyed.

The writer suggests that more concentrated solutions should be employed (55 lbs. of a 30 per cent salt in 22 gallons of water) and that it should be sprinkled on to the plants by means of a vine sprayer on a fine morning after heavy dew. For a field that is badly infested one must reckon about 352 lbs. of salt dissolved in 1092 gallons per acre; the solution is prepared simply by placing the proper amount of the solid in a bag and suspending it in the measured amount of water. This treatment has no bad effect upon the cereal and represents, in fact, a very fair amount of potash manure, which can only have beneficial effects upon the harvest.

## INJURIOUS INSECTS AND OTHER LOWER ANIMALS.

GENERALITIES

1239 – **Animal Pests on Cultivated Plants Observed by the Entomological Bureau of Stavropol in 1914.** — UVAROV, B., in *Rapport sur les travaux du Bureau entomologique de Stavropol au Caucase pour l'année* 1914, pp. 102-105. Petrograd, 1916.

The most important among the insects which are pests upon cultivated plants in Stavropol is the migratory locust (*Pachytylus migratorius* L.) which was observed in 1914 in only one single locality on the River Kouma. This insect has been completely destroyed by repeated sprayings begun in 1908 under instructions issued by the Bureau, 1914 being the last year in which the treatment was used. In addition to this method of dealing with *Pachytylus* experiments have been made using baits of bran and treacle poisoned with potassium arsenite. These experiments have given splendid results. Besides this two sprayers have been tested: a horse drawn machine and a knapsack sprayer. The latter has been found to be the more convenient for the migratory cricket.

Observations upon harmful insects have been made by the staff of the Bureau during their tours, and at two places in the district temporary laboratories have been equipped to the same end; thus a great number of

pests have been observed which have escaped notice in previous years, and more detailed investigations of the ones already known have been made.

Among Arachnoidea, *Bryobia ribis* Thomas, which attacks gooseberry bushes in the spring, has been seen for the first time.

*Thrips linarius* Uzel has damaged flax to a considerable extent.

The following Hemiptera have been recorded for the first time on fruit trees and shrubs in orchards: *Mezocerus marginatus* L., *Rhyparochromus chiragra* F., *Calyptonotus rolandri* L., *Drymus sylvaticus* F., *Piesma maculata* L., *Monanthia echii* Schrc. and *Lygus rubicundus* Fall., on flax, *Carpocoris lunulatus* Goeze and on lucerne, *Brachycoleus scriptus* Fl., *Adelphocoris vandalicus* Rossi and *A. ticinensis* Mey. The *Cicads* collected have not yet been identified by the Bureau; a great many specimens of *Deltocephalus* sp. and *Cicadula* sp. have been found on cereals. A certain number of plant lice have been recorded, and some species have been noted: *Chaitophorus populi* L. (on white poplars); *Sitobion cereale* Kaltb., *Aphis obnoxia* Mordwilko n. sp., *Aphis* sp. (all the three preceding forms from cereal crops); *Rhopalosiphum ribis* Buct., (on gooseberries); *Aphis prunina* Walk. (on plums); *A. vitis* Scop. (on vines); *A. craccivora* Koch (on lentils); *A. persicae* B. de F. (on peaches and almonds) ; *A. crataegi* Kaltb. (on the apple). Of the *Coccidae*, *Phenacoccus aceris* Sign. (*Dactylopius vitis* Licht.) has been found in cracks in the bark of apple trees.

Among the Lepidoptera, *Lymantria dispar* L. has been increasing with great rapidity in the valley of the Kouma and has caused a great deal of damage. Two caterpillars (*Heliothis dipsacea* L. and *Phalonia epilinana* Zell.) have attacked flax ; the first was studied by SHAMRAY and the existence of two summer generations has been established. The following species have been observed this year for the first time : *Pieris daplidice* L., whose caterpillars cause havoc among the plants of white mustard ; *Deilephila lineata* F. var. *livornica* Esp., on the vine ; *Poecilocampa populi* L., on *Populus pyramidalis* ; *Gastropacha quercifolia* L., on the plum ; *Acronycta tridens* Schiff., on the apricot ; *Cucullia santonici* Hb. on sunflowers ; *Eubolia arenacearia* Hb., in great numbers on lucerne. The *Microlepidoptera* pests have been the objects of very detailed work, and a certain number of species have been recorded which had not been described. Such are : *Sarrothripus revayana* Sc., on the poplar ; *Cledeobia moldavia* Esp. (the caterpillars were abundant in the steppes) ; *Pionea forficalis* L. on cruciferous plants ; *Tortrix viridana* L., whose caterpillars have done a great deal of harm to the oaks in Stavropol and its surroundings ; and several species which principally attack fruit trees, such as : *Acalla holmiana* L., *Cacoecia podana* Sc., *C. rosana* L., *Pandemis ribeana* Hb., *P. heparana* Schiff., *Steganoptycha* sp., *Gelechia rhombella* Schiff., *Coleophora nigricella* Stgch.

The staff of the Bureau have devoted especial care to the life histories of the *Curculionidae* that attack fruit trees. The most important of these are : *Otiorrhynchus aurosparsus* Germ., *Phyllobius oblongus* L., *Sciaphobus squalidus* Gyll. and *Anthonomus pomorum*. The principal plant host of

the first of these which destroys the shoots, flowers and leaves of fruit trees, is the stinging nettle according to GLAUSOUNOFF, so that well kept gardens are free from it ; the reproduction in this, as in the allied species of *Otiorrhyncus*, is parthenogenetic. A more detailed account of two Coleoptera has been given, both of them being pests on mustard : *Colaphus hōfti* Men. and *Lixus ascanii*. ; the former has only one generation of larvae in the summer and hibernates in the adult state ; the latter, it appears, has two larval generations and it is the larvae which hibernate. The following Coleoptera are now reported as being harmful : *Podonta* sp., on the flowering ears of corn ; *Lina populi* L., on poplars all along the River Kouma ; *Otiorrhyncus ligustici* L., which is a serious pest on lucerne ; *Phyllobius pyri* L., on *Ulmus* ; *Eudipnus micans* F., also on *Ulmus* : *Psalidium maxillosum* F., on mustard ; *Cleonus punctiventris* Germ. and *C. nigrivittis* Pall. var. *kindermanni* Est., on mangolds ; *Ceutorrhyncus macula-alba* Hrbst., which causes great damage to poppies ; *Baridium scolopaceum* Germ., on mangolds : *Rhynchites giganteus* Kryn. with other allied species on fruit trees ; *Blithopertha lineata* Fbr., which injures the leaves of haricot beans and is also found, with species of the genus *Anisoplia*, on the ears of wheat.

Among the Diptera large number of *Contarinia tritici* Kirby have been seen, which have not done much harm.

Important among the observations on the Hymenoptera are the records of damage done to maize shoots by ants, and GLAUSOUNOFF's researches on the Tenthredinidae of cereals (*Cephus pygmaeus* L. and *Trachelus tabidus* L.). These two species are evenly distributed throughout the region and it is of practical as well as theoretical interest to discover what are the diagnostic features of their larvae. A study of the external characters is useless in this connection, but there are great differences in the form of the silk-producing glands ; a detailed description of the morphology and anatomy of these larvae will be published in a separate paper. The following Hymenoptera pests are recorded for the first time in this region : *Xylocopa violacea* F., which has done a good deal of harm to the wooden constructions in the villages ; *Eurytoma amygdali* End., in the kernels of plums ; *Hoploxampa fulvicornis* Klg., in plums ; *Athalia spinarum* F., on cabbages and mustard.

Besides the harm done by insects, very serious damage has been caused by field mice (probably *Microtus* sp.) which occur in great numbers in the south of the Government, and in certain places have destroyed the seedlings of cereals. The number of ground-squirrels (*Spermophilus* sp.) increases each year and the methods used for their destruction are inadequate owing to the lack of the necessary resources.

1240 – **Insect Pests of Agriculture in British East Africa.** — DEAKIN, R. H., in *The Annals of Applied Biology*, Vol. II, N° 4, pp. 241-244. Cambridge, 1916.

During the year 1914 large bands of *Schistocerca peregrina* some in the adult and some in the larval condition appeared throughout the Protectorate ; the damage done was not extensive, only a few plants of coffee and of maize being attacked.

Among the pests that attack coffee *Antestia variegata* is the most serious; however, according to the writer, the development of this insect is checked by the presence of a Chalcid, hitherto unidentified, which is parasitic on its eggs. The Chalcid lays an egg in each of the eggs of the *Antestia*, and the number of infected eggs often exceed 50 per cent. The writer suggests that the development of this Chalcid should be encouraged and that it should be introduced into regions where at present it is unknown.

Coffee is also attacked by *Lecanium nigrum*. A great many individuals of this species fall a prey to parasites. Other pests are *L. africanum* and *Euxoa segetum*. To keep the latter in check the soil must be kept free from weeds and intelligent use should be made of poisoned baits.

The following have been recorded from Citrus plants: *Argyroleucotreta*, whose larvae attack ripe oranges; *Icerya purchasi*, which does not appear likely to be serious in the Protectorate; little Coleoptera (*Halticinae?*) appeared suddenly in numerous swarms in a Citrus plantation; the young leaves of the plants were seriously injured; *Papilio mackinonni*, whose caterpillars destroy the leaves of oranges; a little mite which is not yet identified, has been recorded as a pest on oranges.

*Eriosoma lanigera* has been observed on apples; winged individuals have not yet been seen.

The leaves of quince-trees have been seriously damaged by the larvae of *Orgyia vetusta*, of which an ichneumon fly is a useful natural enemy.

The larvae of *Duomitus capensis* bore through the branches of the indigo plant (*Cassia didymobotrya*) and kill them.

The writer has discovered a new enemy of Black wattle (*Acacia decurrens*); this is believed to be the larva of a Buprestid, but an adult individual has not yet been found. The larvae, which emerge from eggs laid on the trunk and branches bore into the cambium and, if they are numerous, kill the tree. The best means of combating this pest is to fell the trees that are attacked and strip off the bark, and moreover to remove all the trees which seem to be in poor condition.

Two Hemiptera belonging to the families *Jassidae* and *Capsidae*, also cause very serious injuries to the same *Acacia*.

7241 – **Species of *Aleyrodidae* which are Harmful to Citrus and other Plants in Various Countries.** — QUAINTANCE, A. L., in *Journal of Agricultural Research*, No. 12, pp. 459-472, fig. 1-3, Pl. LXIV-LXIX. Washington, D. C., 1916.

1) *Aleurocanthus citricolus* (Newstead), discovered on *Citrus* sp. at Dares-Salaam (German East Africa); 2) *A. citriperdus* n. sp., a pest on *Citrus* spp. in Ceylon, in India (Lahore), in Java (Buitenzorg and Sandan Glaya); *A. woglumi* Ashby (spiny citrus white fly) observed in India, the Phillipine Islands, Ceylon, Jamaica, Cuba, and the Bahama Islands; plant hosts so far established: *Citrus* sp. (Lahore, Guiranwala, Kalimpong, Sikkim (India), and Kingston (Jamaica), orange (India, Manilla, Jamaica, Cuba and the Bahama Isles); *Capparis Roxburghi* and *C. pedunculosus* (in the Botanical Garden of Ceylon); *Morus* sp. (Lahore); *Salacia reticulata* and *Kurrimaia zeylanica* at Peradenyia (Ceylon); *Guaiacum officinale* and *Cestrum nocturnum* L. (at Kingston); undetermined plant hosts (India):

4) *A. spiniferus* (Quaintance), on *Citrus* sp. and on roses at Garalt (Java) and on oranges at Macao (Southern China) ; 5) *Aleurolobus marlatti* (Quaintance), on *Citrus* sp. and *Morus* sp. at Lahore ; on *Ficus* sp. in the Ceylon Botanical Garden ; on oranges at Tokyo and at Kumamoto (Japan), etc. ; on an unknown plant in the Buitenzorg Botanical Garden (Java) ; 6) *Aleurothrixus floccosus* (Maskell) common in the following localities : West Indies, Florida, Mexico, British Guiana, Brasil, the Argentine, Chili and Paraguay ; not only seen on the orange (Mexico) and on *Citrus decumana* and *C. Limetta*, but also on the sea grape (*Coccoloba uvifera*), *Plumeria* sp., *Baccharis genistelloides*, *Psidium Guajava*, etc. ; 7) *A. howardi* (Quaintance) on the same hosts and in the same localities as *A. floccosus* ; 8) *A. porteri* n. sp., on the orange at Santiago, Ransagua, San Bernardo (?) (Chili) ; on *Schinus dependens* at Santiago ; on *S. molle* in Chili ; on *Lippia citriodora* and *Myrtus* at Santiago ; on an unknown *Solanum* at Villa del Mar (Chili) and on *Eugenia cauliflora* at Rio de Janeiro (Brasil) ; 9) *Bemisia giffardi* (Kotinsky) on *Citrus* spp. in several gardens in Honolulu (Hawai) where it has probably been introduced, most likely from India, where it has been observed on an unknown host plant at Lahore ; 10) *Dialeurodes citri* (Ashmead), the so-called Citrus white fly, one of the most harmful pests upon citrus plants in Florida (where it has been known since 1880), and in all the States along the Gulf of Mexico ; recorded also from Colorado, Illinois, the Columbia District and California, and also from Mexico, Chili and Brasil ; without doubt this form is of eastern origin, being found in numerous localities in India, Ceylon, Japan and China ; in Florida it occurs not only on *Citrus*, but also on *Melia Azedarach*, *Gardenia jasminoides*, *Ligustrum* spp., *Diospyros Kaki*, *D. virginiana*, *Syringa* sp., *Coffea arabica*, *Ficus nitida*, etc. ; 11) *D. citrifolii* (Morgan), known in North Carolina, Mississippi, Louisiana, California, Florida, Cuba and Mexico ; besides being found on *Citrus* spp. it has also once been recorded upon *Ficus nitida* at Audubon Park, New Orleans ; 12) *Paraleyrodes perseae* (Quaintance), known only in Florida on oranges, *Persea americana* (avocado), *Persea* spp. and perhaps also on persimmons (*Diospyros* spp.) ; 13) *Trialeurodes floridensis* (Quaintance) in Florida on *Anona squamosa*, *Persea americana*, *Psidium Guajava* and on the orange ; but probably its attacks on the latter are of little importance ; 14) *T. vitrinellus* (Cockerell) on the orange in Mexico, and on oaks in California ; here again the orange is probably not seriously damaged ; 15) *Tetraleurodes mori* (Quaintance), a species which is indigenous to the eastern United States and is widely spread throughout them, attacking a great many plant hosts : (Mulberry-tree, *Platanus occidentalis*, *Acer*, *Cornus*, *Celtis occidentalis*, *Diospyros* spp., *Ilex*, *Kalmia*, etc.) ; recorded from Arizona and Mexico on oranges, where this parasite is a race rather than a variety of *T. mori*, to which the name of *arizonensis* (Cockerell) has been given.

1242 - ***Diestrammena marmorata* (*Tachycines asynamorus*), an Orthopteran from German Greenhouses.** — EBNER, R., in *Centralblatt für Bakteriologie, Parasitenkunde und Infectionskrankheiten*, Vol. 45, No. 18-25, pp. 587-594. Jena, June 19, 1916.

For several years a strange Orthopteran has occurred in greenhouses in Germany, which is known either as *Diestrammena marmorata* de Haan or as *D. unicolor* Brunner. In 1913 BOLDYREV established the fact that *Diestrammena* from Central Germany is identical with *Tachycines asynamorus* Adel. which is found in greenhouses in Petrograd. The writer has obtained several specimens from a greenhouse in Vienna which were identified as *T. asynamorus*. It is not known to what country this insect is indigenous, but most probably it was imported into Europe from America.

It was recorded for the first time in 1891 by KREJCI at Prague, and it has been known in hothouses in Hamburg since 1892. Later it has appeared in Saxony and in Thuringia, and notably in Kiel, Lubeck, Waudsbek, Münster, Berlin, Breslau, Frankfort o. M., Leipzig, Dresden, etc. It has also been found at Brussels (ADELUNG), Lille (1913), Paris (CHOPARD, 1913), in England (Kew Gardens, St. Leonard's and Ipswich, 1910-1913) and in Denmark (Frederiksberg). In almost all these places it has been described under the name of *Diestrammena*, but undoubtedly it is identical with *Tachycines*. In Austria it has only been reported from Prague and Vienna.

The insect only comes out at night when it is very active, being able to jump to a height of 19 $^1/_2$ inches. During the day it hides itself in pots or in cracks in the walls of the greenhouse. While the larvae are moulting they hang freely in the air suspended by the posterior end of the body.

When the insects are captured a brown liquid is excreted from the mouth. In summer they often leave the greenhouse during the night but never for long. The same thing has been observed in *Troglophilus* (an insect which lives in dark places) and the writer concludes that the two insects belong to the same group. But as *Tachycines* only inhabits greenhouses and never cellars, CHOPARD considers that a uniform temperature and a high degree of moisture are more essential than darkness.

Reproduction goes on all the year round, but more especially in the spring. According to BOLDYREV and GERHARDT copulation takes place at night. The female lays 1 to 50 eggs a night and altogether several hundreds are laid. The eggs are oblong and about 2 mm. long by 1 mm. wide. The behaviour of the young larvae is exactly like that of the adult insects.

The food principally consists of animal matter, but according to LUDWIG and EBNER it is probable that vegetable material also can be utilised.

The writer believes that this insect does more harm than is generally supposed, but unfortunately no satisfactory methods of dealing with it are known. Great cleanliness in the greenhouses is recommended and also fumigation with sulphur vapours and with carbon bisulphide.

Several investigators recommend spraying the plants with Schwein-

furth's green, but the writer considers it scarcely probable that this method will destroy the eggs in the ground.

In conclusion it is suggested that a further study of the origin and life-history of *Tachycines* should be made, and that further esperiments on preventive methods should be undertaken.

MEANS OF PREVENTION AND CONTROL

1243 – **New Species of Braconid Hymenoptera, Parasites of Tripanids Diptera in India.** — SILVESTRI, F., in *Bollettino del Laboratorio di Zoologia generale e agraria della R. Scuola superiore d'Agricoltura in Portici*, Vol. XI, pp. 160-169, Fig. I-VI. Portici, September 27, 1916.

A description is given of the following new species of Braconid Hymenoptera which are parasitic on Tripanids collected from various localities in India by THOMAS BAINBRIGGE FLETCHER :

1) *Bracon fletcheri* n. sp., obtained from fruits of *Zizyphus Jujuba* Lam., which were attacked by *Carpomyia vesuviana* A. Costa ;

2) *Opius fletcheri* n. sp., obtained from the pupae of *Chaetodacus cucurbitae* Coquillet, whose larvae live in the fruits of *Momordica Charantia* L.

3) *O. incisi* n. sp., at Pollibetta, Southern Coorg, obtained from the pupae of *Chaetodacus incisus* Walk., living in fruits of *Careya arborea* Roxb. (jak fruit) ;

4) *Biosteres carpomyiae* n. sp., at Pusa, obtained from pupae of *Carpomyia vesuviana* A. Costa ;

5) *B. persulcatus* n. sp., in northern and southern Coorg, obtained from pupae of *Chaetodacus incisus* Walk. ;

6) *B. compensans* n. sp., in Coorg, obtained from pupae of *Chaetodacus incisus* Walk., living in the fruits of *Careya arborea* Roxb.

1244 – **The Green Lacewing Fly (*Chrysopa californica*), a Natural Enemy of Insect Pests in the United States and in California.** — WILDERMUTH, V. L., in *Journal of Agricultural Research*, Vol. VI, No. 14, pp. 515-525, Fig. 1-7. Washington, D. C., 1916.

The larvae of *Chrysopa californica* Coquillet destroy large numbers of insects which are parasitic on cultivated plants notably : clover mite (*Bryobia pratensis* Garman), two spotted mites (*Tetranychus mytilaspidis* Riley), red spider (*T. telarius* L.), apple leafhopper (*Empoasca mali* Le Baron), grape leafhopper (*Typhlocyba comes* Say), Pear Psylla (*Psylla pyricola* Foerster), mealy plum plant louse (*Hyalopterus arundinis* Fabricius), melon aphis (*Aphis gossypii* Glover), black peach aphis (*A. persicae-niger* Erwin Smith), green Citrus plant louse (*Macrosiphum citrifolii* Ashmead), Citrus mealy bug (*Pseudococcus citri* Risso), frosted scale (*Eulecanium pruinosum* Coquillet), red scale (*Chrysomphalus aurantii* Maskell), purple scale (*Lepidosaphes beckii* Newman), wheat thrips (*Euthrips tritici* Fitch), barley mite (*Notophallus viridis* Banks), green bug (*Toxoptera graminum* Rondani), and corn leaf aphis (*Aphis maidis* Fitch).

Every female lays about 30 eggs, each one being supported by a slender stalk ; the eggs are hatched at the end of 6 to 12 days. The larvae pass through two moults which divide the larval period up into three stages, occupying 11 to 22 days, the average time being 16 days.

The larvae are very voracious, each one being able to dispose of 74 to

160 aphids. The time occupied by the pupal stage varies according to the season ; in March it lasts from 14 to 23 days, the average time being 16 days, and in November the limits are the same but the average is 20.

This species of *Chrysopa* has six generations annually ; the first from February 15 to March 15, and the others following on at intervals of 40 to 45 days until late into the autumn.

This insect is common and widely distributed in the States bordering on the Pacific, Texas, Arizona, New-Mexico, Nevada, southern California, and possibly in Utah. Among its natural enemies the chief are the western wood peewee (*Contopus richardsonii*) and the nighthawk (*Chordeiles virginianus*).

1245 - ***Signiphora merceti*** **n. sp., a Natural Enemy of the Cochineal Insect *Chrysomphalus dictyospermi* in Spain** (1). — MALENOTTI, E., in *Redia*, Vol. XII, No. 1, pp. 181-182. Florence, September 21, 1916.

A systematic description of a new Chalcid, *Signiphora merceti*, obtained by breeding specimens of *Chrysomphalus dictyospermi* from Spain.

Three females of this Chalcid have beene xamined, but the male is still unknown. The new species is named after MERCET the entomologist.

1246 - **Observations upon *Icerya purchasi* and its Natural Enemy *Novius cardinalis* in Sicily** (2). — DE GREGORIO, A., in *Il Naturalista Siciliano*, Vol. XXIII, N. S., Nos. 1-6, pp. 5-17, Pl. I-IV. Palermo, 1916.

*Icerya purchasi* Mask. has recently been found at Villabate (Palermo) and the writer has been able to follow out the various stages in its development.

The larvae are able to move with great force and rapidity, and moreover they can be kept alive for several days without food.

The writer confirms the statement that *Novius cardinalis* Muls. is very useful in keeping down the numbers of *Icerya*. He introduced specimens of *Novius* at Villabate which had been received from the Zoological Laboratory at Portici (Naples). Other specimens had previously been introduced at Bagheria (Palermo), and the writer believes that they had multiplied with great rapidity and had helped on the destruction of the cochineal insects at Villabate. He also thinks it probable that another of the Coleoptera, *Chilocorus bipustulatus* L., is useful in the same way and has also helped to stamp out *Icerya* at Villabate. The development of *Novius* is described in this paper. The statement that the adults feed upon the eggs and young larvae of *Icerya* is contradicted.

The writer has shown that the young larvae of *Icerya* are quickly killed by spraying the under surfaces of the leaves of the plant host with soap-suds.

1247 - **Prevention of the Hessian Fly (*Cecidomyia destructor* = *Mayetiola destructor*) in Kansas by Choice of the Season for Wheat Sowing.** — See No. 1170 of this *Bulletin*.

(1) See also *B.* October 1916, No. 1140. (*Ed.*).

(2) See also *B.* May 1913, N° 621. (*Ed.*).

1248 - **Animal Pests of Rice in Java.** — See No. 1229 of this *Bulletin*.

1249 - ***Helopeltis* and its Relations to Cacao Trees.** — ROEPKE, W., in *Mededeelingen van het Proefstation Midden-Java*, No. 21. Batavia, 1916.

During the years 1901 and 1902 a very severe drought in Central Java was accompanied by the presence of *Helopeltis* on Cacao trees. During the following years when there were heavy rains the pest was much less severe, but it again became serious during the years 1913, 1914 and 1915 which were unusually dry. The harm done led the writer to resune his researches on *Helopeltis*.

There are two species, *H. antonii* and *H. theivora*, which attack cacao plantations. They resemble one another closely both in life history and in the damage they do.

The female lays her eggs in parts of the tree where there is abundant moisture, *i. e.* in the rind of the fruits, the young shoots, or even in the parts of the stems which are not woody. Soon, a black patch appears at the place where the eggs are laid, caused by necrosis of the surrounding tissues. After 6 days the larvae hatch out and scatter over the branches in search of food. Ten days later they are mature.

The places at which the insect feeds soon turn black and normal growth ceases. The writer gives a list of the trees attacked by *Helopeltis*, in which both wild and cultivated trees figure.

*Helopeltis* flourishes best in shady damp places ,and for choice attacks trees which are not exposed to the sun. An account is given of the conditions which favour the insects' dispersal and also of the relations that exist between ants and *Helopeltis*.

For more than 10 years the writer has observed that whenever the black cacao ants (*Dolichoderus bituberculatus*) occur in great numbers *Helopeltis* disappears. He therefore suggests that the pest should be dealt with by encouraging the presence of these ants in the plantations by providing them with suitable nests hung from the trees. Another effective way of checking the spread of *Helopeltis* when the attack is not severe is by catching the insects.

Where the attack is widespread and the insects are numerous it is a good plan to burn the fruits and the stalks.

1250 - ***Eurytoma* sp., an Hymenopteran Pest on Almond Trees in Palestine.** — AHARONI, J., in *Der Tropenpflanzer*, Year 19, No. 6, pp. 317-322. Berlin, 1916.

The larva of *Eurytoma* sp. causes very extensive damage to almond trees in Palestine, 50 per cent of fruits being destroyed every year.

When an almond is attacked it turns first brown and then black and is in consequence unsuitable for food. The larva does not live at the expense of one of the enemies of the almond tree but by destroying the fruits themselves. However in 600 blackened almonds 3 larvae of one of the Microlepidoptera have been found and one of a Curculionid, but it is not likely that they were hosts of the *Eurytoma* larvae. Nevertheless the writer does not believe that the presence of *Eurytoma* alone causes the blackening of the almonds, for many fruits which are black outside contain a normal, healthy kernel.

After the flowering season of the tree (end of February to beginning of March) the adult insect leaves the almond to attack the ovaries of new fruits. Almonds with two kernels invariably contain two larvae.

The writer has never found an egg of *Eurytoma* though he has examined numerous fruits; towards the end of May the fully grown larvae have already appeared.

The white larva is blind, without legs, with the head but slightly developed and a body which is round in the middle but pointed at either end. When it is taken from the fruit and exposed to the sun it rolls up and dies, which proves that it cannot bear the direct rays of the sun. Inside the body a green liquid is produced, both in the larvae feeding on the green almonds and on the ripe white kernels. Apparently these larvae have great powers of resistance against changes of climate for all those raised in the laboratory developed quite normally. Onfy 1 per cent of the larvae in the fruits were dead. This insect seems to have few natural enemies which explains why it has been able to invade Palestine to such an extent. The varieties most liable to attack are Victoria and Princess, both of them bearing fruits with soft shells.

In the Arabian almonds with hard shells the writer has discovered other pests, notably the larvae of one of the Diptera. *Eurytoma* seems to prefer the old trees.

When the harvest time arrives (middle of July to beginning of August) the kernel has been completely eaten, but the larva remains in the almond until the following spring (February or March); it resists the winter cold quite well.

Experiments have been conducted to determine what influence temperature has upon the insect's development. If almonds containing larvae are kept in a dark place at a temperature of 17°-18° C., the adults are hatched out at the end of May instead of in February or March. Generally hatching takes place between 8 and 9 in the morning when it is very hot. The insects secrete a liquid to dissolve the shell of the fruit, and this makes a hole through which the adult insect emerges. The females make larger holes than the males, which perhaps affords one means of distinguishing between the sexes.

When there are two kernels and each contains a larva, the insects come out by two different holes. The writer has sometimes found that one kernel contains an adult insect just about to hatch out, while the other contains quite a young larva. Therefore it is evident that the two eggs were deposited by different insects.

Loss of juice from the almond does not hinder the insect's development.

The pupal stage lasts on an average for 2 or 3 weeks; during this time the white grub gradually turns black.

The insect can only be kept in check by picking and burning all the fruits which have turned black, but from which the adults have not yet escaped.

1251 - ***Blastophaga ghigii*** **n. sp., and** ***Pleistodontes froggatti*****, Chalcid Hymenoptera from Australia Living on the Fruits of** ***Ficus stenocarpa*** **and** ***F. macrophylla*** **Respectively.** — GRANDI, G., in *Bollettino del Laboratorio di Zoologia generale e agraria della R. Scuola superiore d'Agricoltura in Portici*, Vol. XI, pp. 145-159, Fig. I-V. Portici, September 7, 1916.

The writer describes from the systematic point of view two Chalcids collected in 1912 by F. SILVESTRI in New South Wales:

1) *Blastophaga ghigii* n. sp., living in the fruits of *Ficus stenocarpa* F. Muell., at Narara; the female is not known;

2) *Pleistodontes froggatti* Mayr., which lives in the fruits of *F. macrophylla* Desf., at Sydney.

1252 - ***Eriophyes*** **n. sp., a Mite Pest on Litchi (*Nephelium Lit-chi*) in the Hawaiian Islands.** — O' GARA, P. J., in *Science*, N. S., Vol. XLIV, No. 1126, p. 142. Lancaster, Pa., 1916.

In the grounds belonging to the United States Experimental Station at Honolulu a plant of *Nephelium Lit-chi* Cambess. (= *Litchi chinensis* Sonner.) was seriously attacked by a mite, recognised later as a new species of *Eriophyes*.

In some cases the whole of the under surface of the leaves was attacked, but more often the disease appeared in distinct patches. Leaves which were severely attacked resembled peach leaves which have fallen a prey to *Exoascus deformans*.

The appearance of this pest always seems to be unexpected, it is never reported until the signs of its presence are well established.

Hitherto no other mite has been recorded upon *N. Lit-chi*; and moreover very few mites are recorded from China to which this tree belongs. It is possible that although *N. Lit-chi* is imported from China it has been attacked later on by a mite which is indigenous to the Hawaiian Islands.

ALFREDO RUGGERI, *gerente reponsabile*.

1. LE SERVICE DE PROTECTION CONTRE LES MALADIES DES PLANTES ET LES INSECTES NUISIBLES DANS LES DIVERS PAYS (The Present Organization of the Services for the Control of Plant Diseases and Insect Pests in the Different Countries). (1914, 350 pages, 4to) . . . . . Frs. 4.00
2. PRODUCTION ET CONSOMMATION DES ENGRAIS CHIMIQUES DANS LE MONDE (Production and Consumption of Chemical Manures in the World). (Second Edition, 1914, 162 pages, 5 diagrams, 2 maps, 16mo) . . . . . " 3.50
3. LA LUTTE CONTRE LES SAUTERELLES DANS LES DIVERS PAYS (The Campaign against Locusts in Various Regions) (1916, 188 pages, 16mo) . . . . . " 3.50

(*d*) Publications of the Bureau of Economic and Social Intelligence.

1. L'ACTIVITÉ DE L'INSTITUT INTERNATIONAL D'AGRICULTURE DANS LE DOMAINE DE LA COOPÉRATION, DE L'ASSURANCE ET DU CRÉDIT AGRICOLES (The Work of the International Institute of Agriculture in the Field of Agricultural Co-operation, Insurance and Credit). (In French, German and Italian). (1912, 34 pages, 16mo) . . . . . " 0.50
2. MONOGRAPHS ON AGRICULTURAL CO-OPERATION IN VARIOUS COUNTRIES, Vol. I. (1911, 451 pages, 16mo). (In English and French) . . . . . " 3.50
   Do. Vol. II. (1915, 213 pages 16mo). (In English and French) . . . " 3.50
3. AN OUTLINE OF THE EUROPEAN CO-OPERATIVE CREDIT SYSTEMS (Second Edition, 1913, 72 pages, 16mo) . . . . . " 0.50
4. L'ORGANISATION DE LA STATISTIQUE DE LA COOPÉRATION AGRICOLE DANS QUELQUES PAYS (The Organization of the Statistics of Agricultural Co-operation in Certain Countries). (1911, 163 pages, 8vo) . . . . . 1.50
5. L'ASSURANCE-GRÊLE DANS QUELQUES PAYS ET SES PROBLÈMES (Insurance against Hail in Some Countries and its Problems). (1911, 110 pages, 8vo) . . " 1.50
6. AGRICULTURAL CREDIT AND CO-OPERATION IN ITALY: SHORT GUIDE TO RURAL CO-OPERATION IN ITALY (in English, 35 pages and in Italian, 34 pages, 16mo) " 0.25

(*e*) Other publications.

1. L'INSTITUT INTERNATIONAL D'AGRICULTURE, SON ORGANISATION, SON ACTIVITÉ, SES RÉSULTATS (The International Institute of Agriculture, its Organization, Activity, and Results). (1914, 31 pages, in English, French and Italian; illustr.) Frs. 1 —
2. LOUIS-DOP: LE PRÉSENT ET L'AVENIR DE L'INSTITUT INTERNATIONAL D'AGRICULTURE (CONFÉRENCE) (Present and Future of the International Institute of Agriculture) (Address). (1912, 60 pages, 16mo). . . . . " 1 —
3. SANTIAGO ALDUNATE: EL INSTITUTO INTERNACIONAL DE AGRICULTURA Y SU IMPORTANCIA PARA LA AMÉRICA LATINA, EN ESPECIAL PARA CHILE (Conferencia) (The International Institute of Agriculture and its Importance for Latin America, especially for Chile). (1913, 30 pages, 16mo) (Address). . . . " 1 —

## II. Publications not for Sale.

1. CONFÉRENCE INTERNATIONALE DE 1905 POUR LA CRÉATION D'UN INSTITUT INTERNATIONAL D'AGRICULTURE (International Conference of 1905 for the Foundation of an International Institute of Agriculture), (1905, 254 pages, 4to).
2. ACTES DES ASSEMBLÉES GÉNÉRALES DES ANNÉES 1908, 1909, 1911, 1913 (Proceedings of the General Assemblies of 1908, 1909, 1911 and 1913). (Four volumes, 8vo., one 16mo).
3. PROCÈS-VERBAUX DU COMITÉ PERMANENT DES ANNÉES 1908, 1909, 1910, 1911, 1912, 1913 (Procès-verbaux of the Permanent Committee, 1908, 1909, 1910, 1911, 1912, 1913, 1914 and 1915). (Five volumes, 8vo., and two 16mo).
4. RAPPORTS ET ÉTUDES DU BUREAU DE LA STATISTIQUE GÉNÉRALE (Reports and Studies of the Bureau of General Statistics). (1911, 260 pages, 8vo).
5. THE SCIENCE AND PRACTICE OF FARMING DURING 1910 IN GREAT BRITAIN. (646 pages, 16mo).
6. ÉTUDE SUR LES RECENSEMENTS DE LA POPULATION AGRICOLE, LES SALAIRES DE LA MAIN-D'ŒUVRE RURALE ET LES COURANTS D'ÉMIGRATION DANS LES DIFFÉRENTS ÉTATS (Study on the Census Returns of the Agricultural Population, the Wages of Rural Labour, and the Currents of Emigration in the Several Countries). (1912, 150 pages, 8vo).

NOTE.

(1) All subscriptions and remittances for the Institute's publications should be made either directly to the International Institute of Agriculture, Rome, or to the principal booksellers.

For Great Britain and Ireland, subscriptions to the Bulletins 1, 2, 3 and remittances for the Year Books are also received at the Board of Agriculture and Fisheries, 4 Whitehall Place, London. S. W.

(2) The prices quoted include packing and carriage. All our publications are despatched on receipt of postal order or international reply coupons.

(3) Despatch is made with every care and punctuality, but unregistered volumes travel at consignee's risk.

(4) To avoid miscarriage, for which the Institute does not hold itself responsible, an additional amount of 25 centimes for registration should be sent with each order.

(5) In case of change of address, the subscriber is requestedto notify the Publishing Bureau of the Institute, forwarding address label.

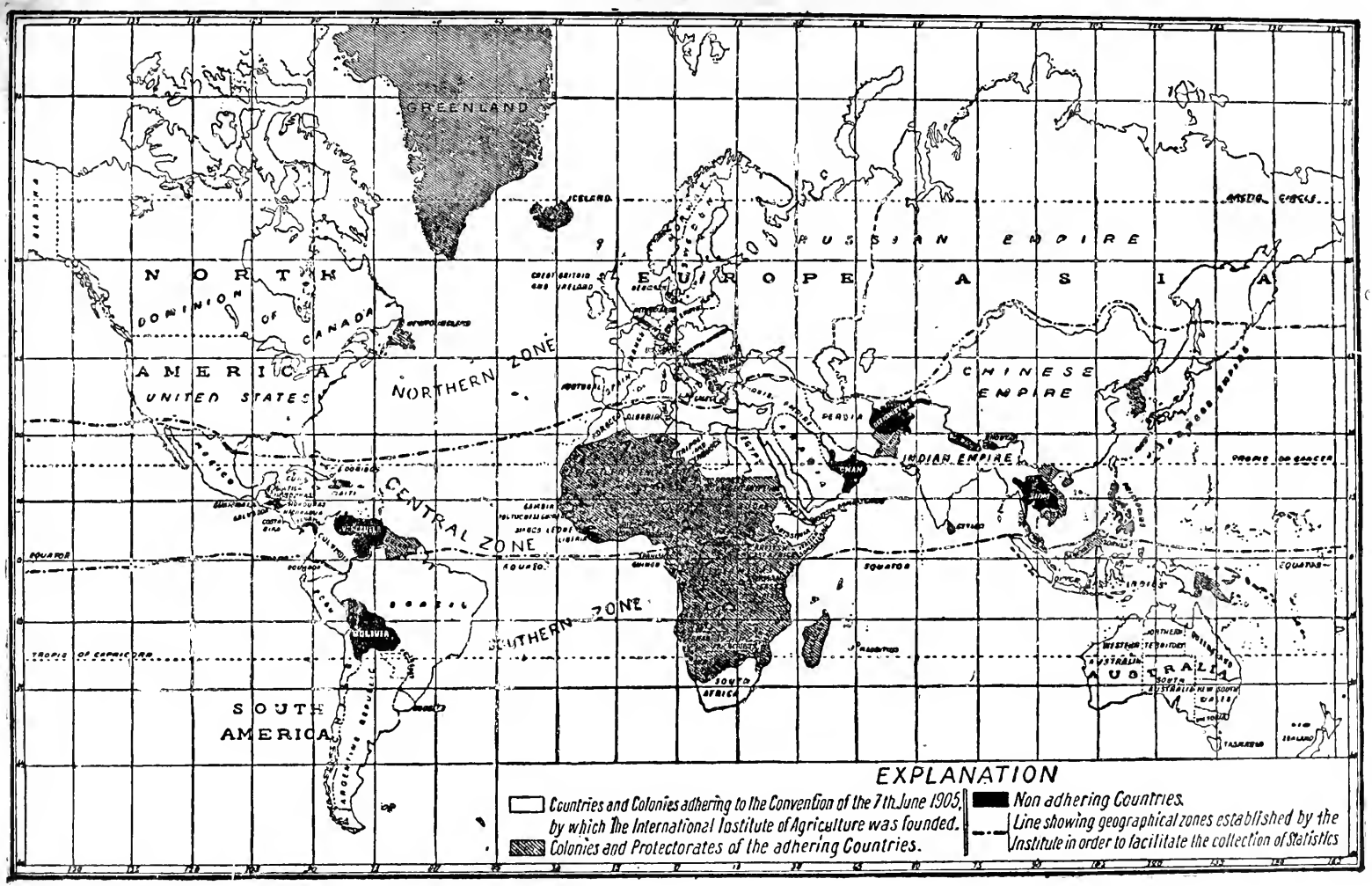
GREENLAND
ICELAND
RUSSIAN EMPIRE
NORTH AMERICA
DOMINION OF CANADA
UNITED STATES
EUROPE
ASIA
CHINESE EMPIRE
PERSIA
INDIA
INDIAN EMPIRE
SIAM
NORTHERN ZONE
CENTRAL ZONE
SOUTHERN ZONE
EQUATOR
TROPIC OF CAPRICORN
TROPIC OF CANCER
BOLIVIA
SOUTH AMERICA
SOUTH AFRICA
AUSTRALIA
EXPLANATION
Countries and Colonies adhering to the Convention of the 7th June 1905, by which The International Institute of Agriculture was founded.
Colonies and Protectorates of the adhering Countries.
Non adhering Countries.
Line showing geographical zones established by the Institute in order to facilitate the collection of Statistics

INTERNATIONAL INSTITUTE OF AGRICULTURE
BUREAU OF AGRICULTURAL INTELLIGENCE AND PLANT DISEASES

# INTERNATIONAL REVIEW OF THE SCIENCE AND PRACTICE OF AGRICULTURE

MONTHLY BULLETIN
OF AGRICULTURAL INTELLIGENCE AND PLANT DISEASES

YEAR VII - NUMBER 12
DECEMBER 1916

ROME
PRINTING OFFICE OF THE INSTITUTE
1916

# Publications of the International Institute of Agriculture.

## I. Publications for Sale.

### A. — *MONTHLY OR WEEKLY PUBLICATIONS.*

| | Annual subscription | Single number |
|---|---|---|
| 1. INTERNATIONAL CROP REPORT AND AGRICULTURAL STATISTICS (*Bulletin of Agricultural and Commercial Statistics*), published monthly in English, French, German, Spanish and Italian, 16mo | Frs. 6 | 0,60 |
| 2. INTERNATIONAL REVIEW OF THE SCIENCE AND PRACTICE OF AGRICULTURE (*Monthly Bulletin of Agricultural Intelligence and Plant Diseases*), published monthly in English, French, German, Spanish and Italian. (Each number consists of about 180 pages, 16mo) | » 18 | 2 — |
| 3. INTERNATIONAL REVIEW OF AGRICULTURAL ECONOMICS (*Monthly Bulletin of Economic and Social Intelligence*), published monthly in English, French, German, Spanish and Italian. (Each number consists of about 150 pages, 16mo) | » 18 | 2 — |
| Subscription to all three Bulletins | » 36 | |

### B. — *HALF-YEARLY PUBLICATIONS.*

| | | |
|---|---|---|
| 1. Statistical Notes on Cereals. Studies on yield, trade, consumption and prices, with rates of ocean freight | Frs. | 1,50 |
| 2. The International Movement of Fertilisers and Chemical Products useful to Agriculture | » | 1,50 |

### C. — *YEAR BOOKS.*

| | | |
|---|---|---|
| 1. ANNUAIRE INTERNATIONAL DE STATISTIQUE AGRICOLE POUR 1910 (International Year Book of Agricultural Statistics, 1910). (1912, XLVIII + 327 pages, 16mo) | Frs. | 5 — |
| Do. Vol. II, Years 1911-1912. (1914, XXXIV + 624 pp. 16mo) | » | 5 — |
| Do. Vol. III, Years 1913-1914. (1915, XLIV + 788 pp. 16mo) | » | 5 — |
| 2. ANNUAIRE INTERNATIONAL DE LÉGISLATION AGRICOLE, 1st. Year, 1911, (International Year Book of Agricultural Legislation, 1911). (1912, 1,122 pages, 16mo) | » | 10 — |
| Do. 2nd Year, 1912. (1913, 994 pages, 16mo) | » | 10 — |
| Do. 3rd Year, 1913. (1914, 1,114 pages, 16mo) | » | 10 — |
| Do. 4th Year, 1914 (1915, LXVIII + 1,020 pages, 16mo) | » | 10 — |
| Do. 5th Year, 1915 (1916, LXXVXVI + 1,460 pages, 16mo) | » | 10 — |

### D. — *OTHER PUBLICATIONS.*

#### (*a*) Publications of the Library.

| | | |
|---|---|---|
| 1. CATALOGUE DE LA BIBLIOTHÈQUE. ANNÉE 1909 (Catalogue of the Library, 1909). (356 pages, 8vo) | Frs. | 3 — |
| 2. LISTE DES REVUES ET JOURNAUX RÉGULIÈREMENT REÇUS PAR L'INSTITUT, 1913 (List of Reviews and Papers regularly received by the Institute, 1913). (84 pages, 16mo) | » | 0.50 |

#### (*b*) Publications of the Bureau of Statistics.

##### (1) *Various publications*

| | | |
|---|---|---|
| 1. L'ORGANISATION DES SERVICES DE STATISTIQUE AGRICOLE DANS LES DIVERS PAYS, Vol. I (The Organization of the Agricultural Statistical Services in the Different Countries, Vol. I). (1910, 446 pages, with tables in addition to the text, 16mo) | » | 4 — |
| Do. Vol. II. (1913, 146 pages, 16mo) | | 2 — |
| 2. RECUEIL DE COEFFICIENTS POUR LA CONVERSION DES POIDS, MESURES ET MONNAIES AU SYSTÈME MÉTRIQUE DÉCIMAL (Collection of Coefficients for the Conversion of Weights, Measures, and Money Values into the Decimal Metric System). (1914, 84 pages, 32mo) | » | 1 — |

##### (2) *Monographs (New Series).*

| | | |
|---|---|---|
| 1. L'ORGANISATION DE LA STATISTIQUE DU COMMERCE EXTÉRIEUR EN ITALIE (Organisation of the Statistics of Foreign Trade in Italy) (1913, 190 pages 16mo) | » | 2 — |
| 2. LE MARCHÉ DES CÉRÉALES D'ANVERS (The Antwerp Corn Market) (1913, 62 pages, 16mo) | » | 1 — |
| 3. LES BOURSES DES PRODUITS AGRICOLES DE HAMBOURG ET BUDAPEST (The Agricultural Produce Exchanges of Hamburg and Budapest). (1913, 55 pages, 16mo) | » | 1 — |
| 4. NOTES SUR LES STATISTIQUES DU COMMERCE EXTÉRIEUR DANS LES DIFFÉRENTS PAYS: Publications Statistiques, Territoires, Sortes de Commerce, Provenances et Destinations des Marchandises (Notes on the Statistics of Foreign Trade in the Different Countries: Statistical Publications, Territory, Kinds of Trade, Source and Destination of Goods). (1914, 96 pages, 16mo) | » | 2 — |
| 5. LA RÉPARTITION AGRICOLE DES TERRITOIRES DES DIFFÉRENTS PAYS (Areas under Crops in the Different Countries). (1914, 310 pages, 16mo) | | 5 — |

##### (3) *Other publications.*

UMBERTO RICCI: LES BASES THÉORIQUES DE LA STATISTIQUE AGRICOLE INTERNATIONALE (Theoretical Bases of International Agricultural Statistics),

INTERNATIONAL INSTITUTE OF AGRICULTURE
BUREAU OF AGRICULTURAL INTELLIGENCE AND PLANT DISEASES

# INTERNATIONAL REVIEW OF THE SCIENCE AND PRACTICE OF AGRICULTURE

## MONTHLY BULLETIN OF AGRICULTURAL INTELLIGENCE AND PLANT DISEASES

YEAR VII - NUMBER 12
DECEMBER 1916

ROME
PRINTING OFFICE OF THE INSTITUTE
1916

*In quoting articles, please mention this BULLETIN.*

# CONTENTS

FIRST PART: ORIGINAL ARTICLES.



SECOND PART: ABSTRACTS.

## AGRICULTURAL INTELLIGENCE.

### I. — GENERAL INFORMATION.



### II. — CROPS AND CULTIVATION.

*a*) GENERAL.



*b*) SPECIAL.

## III. — LIVE STOCK AND BREEDING.

### *a*) GENERAL.



### *b*) SPECIAL.



## IV. — FARM ENGINEERING.

## V. — Rural Economics.



## VI. — Agricultural Industries.



# PLANT DISEASES.

## II. — Diseases not due to Parasites or of Unknow Origin.



## III. — Diseases due to Fungi, Bacteria and other Lower Plants.

### *a*) General.



### *b*) Special.

## IV. — Weeds and Parasitic Flowering Plants.



## V. — Injurious Insects and other Lower Animals.

### *a*) General.



### *b*) Special.



## VI. — Injurious Vertebrates.



---

The Bureau assumes no responsibility with regard to the opinions and the results of experiments soutlined in the Bulletin.

The Editor's notes are marked (*Ed.*).

FIRST PART

# ORIGINAL ARTICLES

## Olive-Growing and Production in Spain

by

JULIAN MANUEL PRIEGO

*Professor of Forestry and Horticulture at the Agricultural College, Madrid.*

### ANTIQUITY AND DISTRIBUTION OF OLIVE-GROWING.

The cultivation of the olive in Spain is contemporaneous with the earliest development of the arts of civilisation. The oil obtained in the districts near the coast appears to have been one of the first articles of commerce dealt with by the Phoenician and Carthaginian colonists. As the use of olive oil by the native population became general, the cultivation of the tree increased in all districts which offered favourable conditions and especially in Andalusia where olive-growing was first started and where it has since preserved its greatest importance. The high prices of the oil, due to the difficulties of transport, encouraged the planting of the tree in the interior of the country where it is now established as far as the southern slopes of the mountain ranges (Sierra de Gredos and Sierra de Guaderama) which cross the central plateau and form for this plant an impassable barrier.

The olive-growing districts in Spain do not form a continuous region limited by lines of latitude or by definite isotherms. As the result of the mountainous nature of the country the limits of the district are variable in these respects, and localities, which are specially well-wooded naturally, may be included even if situated at altitudes higher than the tree will usually tolerate.

Olives are grown in thirty-six of the forty-nine Spanish provinces; they are not grown in the following provinces: — Pontévédra, Léon, Zamora, Valladolid, Ségovia, Soria, Palencia, Oviedo, Burgos, Santander, Biscay, Guipuzcoa and the Canary Islands. As the area devoted to olive-growing in the provinces of Lugo and Orense is only 407 acres it is evident that the

olive-growing region is limited by the central mountain ranges already mentioned which cross the plateau from W. S. W. to E. N. E. and meet the Iberian Mountains in the N. E. Beyond the latter range the north-eastern olive-growing districts are found in the lower part of the basin of the River Ebro and include the whole of the provinces of Navarre and Alva. In the north-western provinces and on the plateau of Old Castille the olive is not grown but it is thoroughly established in the basins of the Tagus, the Guadiana, the Guadalquiver, the Ségura and the Ebro.

The soils on which the olive is grown vary greatly, as do the geological formations from which these soils are derived. Most of the soils are formed from the remains of Cretaceous and Jurassic strata, from the Silurian slates of the Iberian Mountains and central ranges, from the Triassic sands and sandstones, and from the conglomerates, sands, sandstones, and gypsum beds of the Miocene which occur in the province of Alcaria and on the low plains of Aragon and South Castille (La Mancha). These olive-growing soils are comparatively rare in the valleys ; the hilltops and slopes are the situations in which they are characteristically found. It may briefly be stated that in such situations the soils which are formed either *in situ* or from transported and partially broken down materials of a pebbly and stony character, which lack spring-water and usually contain a large proportion of calcium carbonate are undoubtedly in a bad condition for the cultivation of cereals but are well adapted to the growth of trees of the type of the olive.

As the result of these geographical features the olive-growing districts are found at altitudes above that of the irrigation canals and at present only 177 300 acres of olive groves are irrigated that is about 4.7 per cent of the total area under olive trees.

The provinces in which the tree is grown comprise not less than a third of Spain, and in this wide-spread district it is natural that the growth and yield of the tree should vary considerably. The changes in the environment of the plant in this extensive and mountainous country are numerous and have given rise to the many varieties known in Spain.

The study of these varieties have been the object of many experimental trials ; special mention should be made of the work carried out in Andalusia by M. Rojas Clement y Martinez Robles and of that of Dr. Colmeiro who has lately collected eighty varieties of which pictures are to be seen in the nursery of the Botanical Garden Madrid.

## Chief varieties grown in Spain.

*O. europea pomiformis* Clem. (" Olivo manzanillo "). — The tree is well developed, the branches are long with plentiful shoots and the leaves are large. The fruit is symmetrical and almost spherical and of a light purple colour when ripe ; it is largely used in tanning and gives an excellent oil. This variety is cultivated in almost all the olive-growing provinces on account of its excellent yield, in spite of the fact that the yield is irregular from one year to another (vecera) and that it requires to some extent special soil conditions.

*O. e. Columella* Clem. (" Carasqueño "). — The tree is small, the branches are few and the leaves narrow. The large fruits are almost spherical and are borne in clusters of three or four ; the colour changes from red to dark purple when the fruit is ripe. This variety is only suitable for certain soils and is liable to the attacks of insects.

*O. e. Ceraticarpa* Clm. (" Cornezuelo "). — The tree is well developed ; the fruit which is borne singly is curved and ripens somewhat late ; the oil is of good quality but limited in amount. This variety is very resistant both to cold and drought.

*O. e. rostrata* Clem. (" Picudo " or " Cornicabra "). — The tree is large and the branches are well developed ; the leaves are elongated and the upper surface is dark grey in colour. The fruit, which is cylindrical, but tapers towards the end, has a curved tip and is larger than that of the preceding varieties. This variety is hardy and considered very fruitful in Aragon.

*O. e. Banqueri.* (" Lechin " or " Pichelin "). — The olives are small oval and somewhat curved ; they are equally suitable for the manufacture of pickles (Olives de Cuquillo) and for the extraction of oil. The variety is hardy and yields a good crop.

*O. e. Alba* (" Salceño " or " Varal blanco "). — The tree is large with numerous branches and, as the lower surface of the leaves rather than the upper is exposed to view, it has a light aspect to which its name is due. The fruits, which are small are borne in clusters and enclose a relatively large kernel or pit.

*O. e. racemosa* (" Arbequin " or " Racimal "). — The tree is of medium size with drooping branches. The blackish fruits yield a large quantity of oil good in quality. The variety begins to bear fruit after a short period of growth but gives an irregular yield from year to year.

*O. e. nigricans* (" Empeltre "). — The tree is not large except in rich soils ; the leaves are long and narrow ; the fruit is round and yields a large amount of excellent oil. This variety begins to bear fruit as a comparatively young tree ; it is hardy and is valued for these qualities in the province of Tortosa and in other districts of the Ebro.

*O. e. maxima* Clem. (" Morcal "). — The tree is large and the olives are big, oval, rounded at the base and flecked with white. The fruit is used both for the extraction of oil and for preservation in salt water (verdeo). The yield is low and the tree bears only at a comparatively late age.

*O. e. viridula.* Couan. (" Verdal "). — This variety is a smaller tree than the preceding ones ; the branches are long and the leaves small ; it is also somewhat tender. The single fruits are large and oval and are preserved in salt water.

*O. e. regalis* (" Real sevillana "). — This variety is chiefly found in Andalusia ; the leaves are large and elongated and the fruit, which is the largest of all the varieties of olives, is nearly round and blue black when ripe. This is almost exclusively a table fruit and its cultivation has been very lucrative in lower Andalousia.

*O. e. argentata.* Clem. (" Moradillo " or " Nevadillo blanco "). — The tree is large and the fruits are almost spherical and dark purple in colour.

The yield is plentiful and the oil is equally satisfactory in quantity and in quality.

*O. e. sorianea* (" Nevadillo negro "). — The tree is of medium size the upper surface of the leaves is dark green and the lower a mother-of-pearl white. The fruit is similar to that of " Moradillo blanco " and of good quality.

*O. e. hispidensis* (" Gordal " or " Ocal "). — This olive-tree is large ; and bears at an early age ; the branches are strong and lustrous and the leaves are large. The fruit is almost as large as that of the Sevillano and the tip is pointed ; it is greyish when ripe, forms a good table fruit and yields oil satisfactory in quality and quantity.

*O. e. gienensis* Colm. (" Javaluno "). — The tree is well-developed and bears large elongated olives.

*O. e. ovata* Clem. (" Tachuno castellano " or " Cirujal "). — The tree is of medium height ; the branches are long and bear plentiful side shoots ; the leaves are narrow and long. The small oval fruit ripens early and gives a very fine quality of oil.

*Other less common varieties.* — Among these may be mentioned " Colchonudo " " de Arola " " Tempranillo " " Rodonillo " " Bellotudo " " Bermejuela " " Nogral " " Verdaleja " " Madrileño " " Ojo de liegre " which have been described by M. Colmeiro in his work, to which reference has already been made. There are other varieties in addition to these which might also be mentioned, but, as they have not been clearly classified, it is possible that they may prove to be merely local names for varieties which have been already described.

## Methods of cultivation.

Although the olive is grown extensively in Spain, its cultivation, in comparison with that of other important crops, has been little studied and cared for. During the last few years, however, a tendency to improve the methods of cultivation has been observed.

The plant is usually propagated by cuttings which are permanently planted. In the province of Valentia and in parts of Andalusia the cuttings are planted singly ; in the majority of the provinces several cuttings are planted on the same spot, and these give rise to a number of shoots of which three or four are preserved, allowed to grow and trained in a definite manner. In the eastern provinces the practice of planting cuttings in nurseries is spreading.

As regards tillage the land is ploughed three or four times usually between the end of the winter and the summer. Care is taken that the direction in which the land is ploughed on each occasion crosses that direction in which the work was carried out on the preceding occasion, Tillage at the foot of the trees is carried out by hand and takes place at two seasons in the year. In the southern districts a ditch is dug round the trunk in the autumn to collect rain water and in the spring the soil round the trunk is thrown up to form a mound (" aporcando "). In other

districts the process is reversed ; in the autumn a mound is thrown up round the tree as a protection against drought and in the spring the mound is destroyed.

Manures are very little employed in olive-growing. Up to recent years only the olive-groves in the neighbourhood of towns received a little dung. Today superphosphate is used in Andalusia and in the province of Valentia while some more advanced agriculturists have begun to employ complete mineral manures.

As regards pruning there are no definite regulations. Ten or twelve years after the planting of the cutting the branches of the tree are first pruned but with great moderation ; only after twenty or twenty-five years are the trees thoroughly pruned at regular intervals. In the eastern provinces, in Aragon, Navarre, and Catalonia, pruning is carried out every two years ; in Andalusia every three or four years ; in New Castille every six years. The number of branches suppressed is variable. In many parts of Andalusia, the pruning of the young shoots under the name of " tala " is very thorough and is followed in the next year by the removal of the superfluous older branches. Every thirty or forty years the trees are heavily trimmed and a new surface of wood exposed ; this process gives new vigour to the tree and is carried out successively on the different stocks of each olive grove.

The different practices observed in this work are probably due not merely to local custom, but partly to local variations in growth as the result of the diverse climatic conditions, and of the use of different varieties of the tree.

In the warmer regions the fruit is gathered in the autumn months ; in the other districts in the winter. As a rule gathering takes place later than is necessary to obtain a good quality in the fruit, but this mistake is being corrected in the chief centres of production.

In almost all Andalusia the fruit is knocked down with long poles and the practise is justified by the great height of the trees ; an exception is made for olives which are destined for table fruits. In the central districts hand-picking is known as " ordeno " - a word which is also employed for the milking of cows goats etc.

More than half the olive groves in Spain are cultivated without the presence of another crop. Where the nature of the soil is suitable, cereals, the vine, the almond and the hazel are grown with the olive. Cereals and the vine are the crops usually found in the olive groves ; but the almond is predominant in the east and the hazel in Catalonia.

## Development and present condition of the olive production.

The modern development of olive growing in Spain has been very slow in comparison to the progress made in the cultivation of other crops such as the vine and the orange. " L'Annuario estadístico de España " in 1858 gives the area devoted to olive-growing as 2 080 226 acres.

The "Estadística de la riqueza territorial" published in 1879 shows that this area had decreased to 1 972 877 acres.

In the "Avance sobre la producción del Olivo" published by the "Junta Consultiva Agronómica" in 1888 the area under olive groves is given as 2 849 932 acres.

In 1897 the «Estadística del Servicio agronómico» gives the total area as 304 941 013 acres and in 1903 the publication of the same department shows that the area has increased to 3 293 258 acres.

According to the "Avance estadístico de la riqueza que en España representa la producción media anual del Olivo y otras cosechas" which has recently been published by the "Junta Consultiva Agronomica", the average area under olives for the period 1904 to 1912 was 3 400 070 acres.

Finally the "Estadística de las producciones viticola y olivarera en el año 1915" published by the same body gives the area as 3 659 644 acres.

It can be seen from these figures, that the area under olive groves is increasing and has been doubled in 57 years. Of the thirteen agricultural districts into which Spain is divided Western Andalusia has the largest olive growing area with 1 229 578 acres, followed by Eastern Andalusia with 758 428. At present these two districts contain more than half the olive growing acreage in Spain.

The yield per acre varies very much from one year to another. A comparison of the average yields of various periods does not clearly conform to the law of variations which might be applied. The average production in the ten year period from 1891 to 1900 was 8 049 lbs. per acre, that of the following fifteen year period was 14 556 lbs. per acre; from 1906 to 1910 the average yield was 12 259 lbs. per acre, and from 1911 to 1915, 16 326 lbs. per acre.

The value of the olive production has gradually increased The figures given in the "Avance estadístico de la Junta Consultiva Agronomica" which summerises the financial returns of the period 1903-1910 are the following:

| | £ |
|---|---|
| Average value of the oil . . . . . | 9 523 932 |
| Average value of the green olives . . . . | 305 361 |
| Average value of the leaves used as fodder . | 492 219 |
| Average value of the wood as fuel . . . . . | 323 907 |
| Average value of the residues ot the fruit . | 665 163 |
| Average value of the oil for tanning . . . | 209 126 |

In the south and east of Spain the cultivation of the olive is being developed and is very prosperous; but in these districts large areas are found, suitable for new plantations, which are still uncultivated.

The economic returns from the areas in cultivation could be improved by the expenditure of increased capital and care in the planting, maintaining, manuring of the groves. Such expenditure, as experience has clearly shown will be amply repaid by the tree.

The most urgent needs of the olive industry are a scientific study of all varieties in regard to the nature of the fruit and oil and to the conditions which affect the growth of the tree ; a similar study of the methods of propagation with special attention to the effects of the various forms of grafting ; and a general and determined effort to cope with the numerous parasites and pests to which the tree is liable. These important tasks should engage the attention of the State, and of the societies of olive planters.

To the sphere of political economy should be assigned those measures needed to protect the pure olive oil against the competition of inferior foreign oils, and against adulteration and blending to which the decrease in exports to foreign markets are largely due.

These measures are of importance to all countries in which olive-growing is a fundamental industry.

SECOND PART.

# ABSTRACTS

## AGRICULTURAL INTELLIGENCE

### GENERAL INFORMATION.

DEVELOPMENT OF AGRICULTURE IN DIFFERENT COUNTRIES

1253 – **Agriculture and its Allied Industries in Rumania.** — XENOPOL N., in *Le Mouvement Economique*, Vol. XXIII, No. 136, pp. 125-154; No. 138, pp. 191-209. Bucharest, April 1 and June 1, 1916.

Since the Treaty of Adrianople in 1829, the production of cereals has become the most important feature in Rumanian agriculture. Up to that time Rumania's chief exports consisted of animal products *i.e.* cattle, wool, wax, wine, salt, hides and salt fish. But after 1829, when she obtained a new outlet for trade via the Black Sea, the character of her agriculture began to change and arable farming gradually displaced the old stock raising industry.

At the present day wheat is the chief crop and occupies an area of 5 million acres. The grain produced is of the finest quality, but the yield is very low (12 to 20 bushels per acre during the past 10 years) and might well be increased 50 per cent by improved methods of cultivation, including the use of artificial manures, and by a better utilization of the available water supplies. Exports of wheat during the years 1911 to 1913 were valued from £8 000 000 to £10 000 000 per annum and amounted to one half of the total exports of cereals. The Rumanian people eat very little wheat; out of a total population of 8 millions only about 2 millions consume it regularly, the staple food of the people being maize.

According to the official returns the gross value of the Rumanian crops in 1914 was as follows:

| | £ |
|---|---|
| Cereals | 40 078 000 |
| Pulse and root crops | 2 768 000 |
| Fodder crops | 3 688 000 |
| Market-garden crops | 979 000 |
| Oil seeds | 618 000 |
| Other crops (fibres etc.) | 533 000 |
| Total | 48 664 000 |

There is a disproportionate amount of cereals grown in the country and it is questionable whether it be good policy to allow the cultivation of wheat and maize to replace grass to such a large extent. The vast area under wheat is no doubt a direct response to the good prices obtained on foreign markets, but the same cannot be said of maize which fetches a much lower price, and its continued growth on a big scale must be attributed in a great measure to the traditional habits of the Rumanian peasants.

The distribution of the area amongst the different sized holdings is given in the adjoining Table. Nearly half the land is in the hands of peasant proprietors and of the other half, four fifths consist of large holdings and estates, while medium-sized farms only occupy 10 per cent of the total area. The peasants, besides owning half the agricultural soil in the country also hold a great part of the estates, paying rent either in cash or in kind. But the disadvantages of this system of land tenure are evident in the low standard of cultivation and the absence of proper buildings, which prove that the land is being worked with insufficient capital.

*Distribution of area amongst the different sized holdings.*

| Size of holding | No. of holdings | No. of holdings per cent of total no. | Area occupied | Area occupied per cent of total area |
|---|---|---|---|---|
| acres | | | acres | |
| Under 1 1/4 | 62 832 | 6.60 | 65 000 | 0.34 |
| 1 1/4 to 2 1/2 | 81 039 | 8.50 | 180 000 | 0.93 |
| 2 1/2 » 5 | 147 900 | 15.20 | 586 000 | 3.01 |
| 5 » 7 1/2 | 131 630 | 13.60 | 834 000 | 4.30 |
| 7 1/2 » 10 | 172 446 | 17.90 | 1 564 000 | 8.08 |
| 10 » 12 1/2 | 148 717 | 15.40 | 1 759 000 | 9.08 |
| 12 1/2 » 17 1/2 | 131 145 | 13.50 | 1 840 000 | 9.50 |
| 17 1/2 » 25 | 45 230 | 4.70 | 975 000 | 5.05 |
| Total under 25 acres | 920 939 | 95.40 | 7 803 000 | 40.29 |
| 25 to 125 | 36 318 | 3.70 | 1 722 000 | 8.89 |
| 125 » 250 | 2 405 | 0.26 | 413 000 | 2.13 |
| 250 » 1 250 | 3 314 | 0.41 | 2 020 000 | 10.43 |
| 1 250 » 2 500 | 1 122 | 0.13 | 1 987 000 | 10.26 |
| 2 500 » 7 500 | 771 | 0.09 | 3 060 000 | 15.80 |
| 7 500 » 12 500 | 112 | 0.01 | 1 077 000 | 5.55 |
| Above 12 500 | 66 | 0.00 | 1 287 000 | 6.65 |
| Grand total | 965 047 | 100.90 | 19 469 000 | 100.00 |

Very little land is held by foreigners in Rumania. Article 7 (§ 5) of the Constitution (revised on October 13, 1879) lays down that "only Ru-

manians born or naturalised, may acquire rural property in Rumania". This did not interfere with foreign owners who were already in possession in 1879, but such owners are no longer numerous for many sold out their properties as the price of land rose.

While exports of cereals have been increasing, those of animal products have decreased from about £2 000 000's worth in 1879 to £116 000's worth in 1913. All Rumanian exports are of an extremely bulky nature while the imports consist of expensive products which occupy little space. Also, many raw materials such as hides and wool are exported and then reimported again as manufactured articles. Both these facts point to the necessity of establishing national industries.

So far nothing has been done with regard to the regulation water systems, and it is only within the last few years that a proper scheme of forest management has been in force. Improved means of transport are badly required for there are only 2200 miles railways on an area of 89 000 square miles. With regard to the important question of the storage of cereals, while the building of the docks at Braila and Galatz has furnished the necessary accommodation for all corn awaiting shipment, the rest of the country is still unprovided with warehouses. These should be established by the Government at all the principal railway stations for the purpose of collecting and grading cereals. By this means a farmer would then be able to raise cash on his harvest while awaiting the best opportunity for marketing his corn.

The condition of the peasants is still unsatisfactory in many parts of Rumania though measures of reform have already been takes, *e.g.* the establishment of rural banks, State aid for the purchase of land, the foundation of peasant societies. An agrarian law passed in 1908 regulated certain agricultural payments: a minimum wage was fixed for labourers and a maximum price for rent. Communal fields have been established where the cultivation of fodder crops will be given every encouragement. Proposals have also been made with regard to the compulsory breaking up of large estates for the purpose of increasing the number of small holders.

Turning to the agricultural industries: A capital of £1 640 000 is invested in flour mills with a plant of 22 120 HP, yet the exports of flour only amount to 7 per cent of the corn. The manufacture of woollen materials is carried out in 13 factories (3 162 HP), which only deal with the coarser kinds of wool and are nothing like sufficient to meet the requirements of the country. Finer qualities of goods are imported in large quantities. The industry could well be expanded if the home production of wool were more abundant and of better quality. But for some time past the number of sheep in the country has been diminishing and little is being done to improve the fineness of the wool. At the model farm at Laza, it is true, some experimental crosses were carried out between the native breeds Tzigae and Frise; and the Ministry of Agriculture imported some Merinos to the Royal estates, and crossed them with local sheep with excellent results so far as the wool was concerned. These, however, are only isolated trials and have no effect on the sheep of the country whose fleece

still remains of a very poor quality. The hemp and linen industries are of little importance and only represent an invested capital of £81 000; the greater part of the hemp produced is exported. The sugar industry which dates back as far as 1873 is somewhat on the decline as the farmers have given up growing sugar beets in favour of more paying and less troublesome crops. The present area under beets is about 35 000 acres and the yearly production of sugar varied from 200 000 to 300 000 tons in 1909 to 1913.

Of the Rumanian forests, which cover 20 per cent of the total area of the country, the State owns some 2 600 000 acres while 4 000 000 acres are private property. The forest industries are in the hands of 14 big companies from whose books the following data have been summarised to give some idea of the total vested interests engaged.

| | £ |
|---|---|
| Ordinary shares | 2 628 000 |
| Debentures | 639 000 |
| Working capital (1913 balance sheet) | 8 112 000 |
| Buildings and plant | 1 555 000 |
| Reserve funds | 84 000 |
| Sinking funds | 717 000 |
| Net profits (1913 balance sheet) | 272 000 |
| Return on capital | 1.8 to 33 per cent (2 companies show a loss) |

A few forest societies have been formed among the peasants, but as they are working without much capital their output is still low. The lack of roads and railways makes the forests very inaccessible and the preparation of transport routes is a heavy initial expense for small associations. Charters have also been granted to two foreign companies (with capitals of £111 000 and £880 000) for the working of Rumanian forests.

There are in all 71 saw mills in the country which employ 12 000 men. Another 50 000 men are occupied with felling the trees and transporting them to the mills. A large proportion of the timber (valued at £940 000 in 1913) is exported, but at the same time Rumanian imports of wood and wood products amount to £620 000 per annum of which the greater part consist of manufactured articles. The paper-making industry is important and represents an invested capital of £1 020 000. It deals annually with £103 000 worth of raw material of which about one third is imported, and produces paper and cardboard which amounted to 18 200 tons in 1914 and was valued at £432 000. No paper is exported, but 3 600 tons of pulp (valued at £32 000) went abroad in 1913.

1254 – **Testing, Storage and Preparation of Unpolished Rice (bras pitjah koelit).** — OTTOW W. M., in *Natuurkundig Tydschrift voor Nederlandsch-Indië*, Part LXXIV, pp. 143-196. Batavia, 1916. RURAL HYGIENE

In connection with the importation of unpolished rice for preventing and restricting beri-beri in the Dutch Indian Army questions arose as to the testing, the storage and the treatment of the above named form of rice,

which have led to the writer's investigations. The results of the investigations are summarised by the writer as follows:

1. — On the ground of taste, no reasonable and still less insurmountable objections can be made to the use of unpolished rice which offers sufficient protection against beri-beri.

2. — Compared with finished rice, unpolished rice becomes easily and speedily unfit for consumption, by decay, by damages done by insects, etc. Although periodical exposure to diffused daylight and regular turning over of the stock have a favourable influence with regard to deterioration during storage, still unpolished rice can scarcely be kept for longer than two months without even quite perceptible alterations.

3. — The necessity of preserving unpolished rice, which must be kept for some time, is best practically met by the use of chloroform or carbon tetrachloride. These are applied in the form of vapour, for which comparatively small quantities are sufficient. They do not modify the hardness, the smell or the taste of the rice, and they exercise a favourable influence on the preservation of the desired activity.

4. — The $P_2 O_5$ proof with the fixed amount 0,4 % of this substance is not sufficiently to be relied upon when testing rice as to its value as protective against beri-beri.

5. — A new method of chemical investigation better enables us to judge of this value. This method consists in the estimation of the spirit dry-residue, according to a process which has been fully described in the text. As criterion the dry-residue limit was to be fixed between 0,55 and 0,6 %.

6. — The physiological test with the help of test-animals is at present the only one which leads to a never-failing, always correct judgment.

The evident suitability of rice-birds for this purpose has led to a method of investigation which in every respect deserves recommendation.

7. — It appears more and more distinctly that requirements for an adequate activity of rice are completely worthless, if at the same time certain stipulations are not made as to the treatment of the rice, viz. the washing and steaming, processes to which the rice must be subjected before it is ready for consumption.

A specimen has been found with a $P_2 O_5$ amount lower than the standard norma of 0,4 % and which notwithstanding this was sufficiently active.

This example shows that there are kinds of unpolished rice to be obtained which in appearance and taste differ little, if anything from entirely polished rice, and which still give more than sufficient protection against beri-beri.

AGRICULTURAL EDUCATION

1255 - **Agricultural Instruction by Correspondence in France.** — LINDET, in *Comptes Rendus de l'Académie d'Agriculture de France*, Vol. II, No. 32, pp. 931-993. Paris, 1916.

In October 1913, the Union of Agricultural Syndicates in the south-east of France began a course of agricultural instruction by correspondence. During its first year as many as 207 pupils were registered, but with the out-

break of war those left on the land were deprived of all leisure, and the number of pupils fell to 54 in 1914-1915 and to 34 in 1915-1916.

At the beginning of each month from October to April every member of the course receives instructions for work, in the carrying out of which he is encouraged to get what help he can from his parents or from a local "monitor" appointed by the Union. The work includes:

1) A course of reading for which books are provided in local libraries or obtainable from the Union at a very low cost.

2) The setting up of a small experimental ground where each pupil can test for himself the effect of manurial dressings, of early or late sowing, etc.

3) The carrying out of simple experiments such as the germination of seeds, the relationship between the density of potatoes and their starch content, the flocculation of clay by lime, the effect of sodium nitrate on tillering and straw production, the topping of sugar beets, the washing of vine poles.

4) Excursions organised by the monitor to neighbouring farms where the pupils are expected to take notes on the crops, on the live stock, on the implements, etc.

5) The writing of papers in answer to questions on such subjects as the nature of the local soils, the crops of the districts and their industrial uses, the treatment of seed, the planting of fruit trees, etc. This branch of the work involves personal effort on the part of the pupil who will have to consult his books in order to find an answer to the questions.

6) The working out of sums on: the price of wheat per given volume from its density and price per quintal (220 lbs); the value of a manure heap, given its composition and the value of each constituent; the price of rations for maintenance or fattening; etc.

Every month the pupils send in their work which must include a report of their excursions and of the progress of their experiments. The papers are corrected and returned, the names of the pupils getting the highest number of marks being published in the monthly sheet of instructions together with remarks of a general nature which apply to all members of the course. When specially good papers are sent in these may even be reproduced in the monthly sheet.

## CROPS AND CULTIVATION.

1256 - **A Detailed Study of Effects of Climate on Important Properties of Soils.** — LIPMAN C. B., and WAYNICK D. D., (Laboratory of Soil Chemistry and Bacteriology, University of California) in *Soil Science*, Vol. I, No. 1, pp. 5-48. New Brunswick, N. J., 1916.

SOIL PHYSICS, CHEMISTRY AND MICROBIOLOGY

In 1908 a set of experiments were started under the joint auspices of the U. S. Department of Agriculture and the Agricultural Experiment Stations of Kansas and California. Two soil blocks, 5 ft. square and 3 ft. deep were moved from each station to the other two stations and placed in position as nearly as possible in the original soil layers. A similar block

of soil was dug up and replaced in its position at every station and a check plot of undisturbed soil was also set aside. It was therefore possible to compare at each station 1) the natural undisturbed field soil; 2) the natural field soil after having been disturbed; 3) the soils from the other two experiment stations. When 7 years later the present writer attacked the problem of the effects of climate on soils, the above plots appeared to provide admirable material for study in this connection, and it was decided to subject them to a physical, chemical and bacteriological investigation.

The most striking change undergone by the transported soils is in their appearance. SHAW and WALTERS originally described the Californian soil as "Sacramento silt loam", the Kansas soil as a "dark heavy loam" and the Maryland soil as a « Light yellow clay ». During the period which has elapsed since the soils were moved, their colour has changed markedly, Kansas and Maryland soils in California becoming of a much deeper reddish colour, and Kansas and Californian soils bleaching to a light or yellowish clay in Maryland. Soils brought to California have also increased their hygroscopic coefficient, their moisture equivalent (1) and their wilting point.

The bacterial investigations show that in general the numbers of bacteria increase when arid soils are put under more humid conditions and decrease when humid soils are brought to a drier climate. Ammonification and nitrogen fixation vary in a similar fashion and so does nitrification with certain forms of nitrogen. The destruction of cellulose, on the other hand, varies inversely with the bacterial numbers.

Chemical analyses reveal marked changes in the acid soluble constituents of soils due to climatic effects. For example the Californian soil increases in lime in Kansas and Maryland (particularly at the latter station) and loses in iron. Though difficult to generalise, the tendency is for soils to increase in iron and decrease in alumina when placed under arid conditions and *viceversa*. Phenomenal losses in certain constituents seem to have occurred in some soils even when the latter were not moved, the Maryland soil losing enormous quantities of magnesia in the given period. With regard to the total water soluble constituents, these increase considerably when the Californian soil is moved to Kansas or Maryland and the same occurs with Maryland soil when moved to Kansas or California.

Some of the effects noted are difficult to explain in the light of our present knowledge, but the causes of other effects stand out quite clearly. For example, it appears that the total internal surface of soils per unit of dry weight increases with the degree of aridity of the climate, and this exercises an important influence on the hygroscopicity, moisture equivalent, wilting point, tenacity, absorbing power and many other physical characteristics of a given soil. With the chemical data the causes for the changes are more difficult to define because of the great irregularity of some of the results obtained. But they indicate clearly that profound

(1) See *R.* Oct. 1916, No. 1050. (*Ed.*)

changes take place in the chemical constitution of a soil when it is moved from an arid to a humid climate or *vice versa*. In general, bacterial activities are far more pronounced under humid than under arid conditions except with regard to cellulose decomposition. This is probably due to the decrease in the carbon of soils under arid conditions and to the decrease in the water soluble substances.

1257 – **The Relationship between the Osmotic Pressure of the Soil Solution and the Growth of Wheat.** — Тулайковъ М. Н. (Toulaikow M. N.) in *Журналъ Опытной Агрономіи имени* П. С. Коссовича (*Review of Agricultural Experiments dedicated to the memory of* P. S. Kossovitch). Vol. XVII, No. 2, pp. 122-163. Petrograd, 1916.

In order to determine the correlation between the salt content of the soil and the growth of plants, a series of experiments were undertaken at the Station of Besentchouk where the alkali soils of the Province of Samara are under special investigation. The osmotic pressure of the soil solution was artificially raised by the addition of mineral salts to the soil and was studied in its relationship to the growth of Bielotourka wheat, a hard spring variety which is widely distributed in the region.

The experiments were begun in 1910 and a first report has already been published (1). Plants were grown in zinc cylinders each of which contained 5 kgs. of black soil (Tchernozem) and about 50 gms. of a mixture of nutrient salts. Before being filled into the pots the soil was dried in the sun till its moisture content had been reduced to 10 to 11 per cent. The nutrient salts were added in the form of solution, but the salts used to raise the osmotic pressure of the soil solution (*i. e.* sodium chloride, nitrate and sulphate; ammonium chloride and sulphate; calcium chloride) were applied in the solid form and in three different ways;

1) The whole amount was mixed with the soil at the start so that the soil solution was immediately brought up to the required osmotic pressure.

2) The salts were added at the rate of one sixth of the total amount per week for 6 weeks. By this means it was possible to reproduce the natural conditions prevailing in alkali soils where the osmotic pressure of the solution increases as the growing season advances owing to the decrease of the water content in the soil. By spreading the applications over 6 weeks, the plants had received the whole amount before flowering.

3) The whole amount was added in a single dressing at the time of flowering.

Distilled water was used for bringing the moisture content of the soil up to 60 per cent of its maximum water holding capacity or in other words to 24 per cent of the dry soil. Selected seeds or pure lines of Bielotourka wheat were employed and careful records were kept of the dates of germination, tillering, shooting, flowering, and ripening. The height of the plants was also measured at different times. When the plants were harvested, the dried grain and straw were weighed separately and the grain was analysed for total and protein nitrogen and for moisture; the

(1) See *R.* 1914, No. 987. (*Ed.*)

weight of 1000 seeds was also determined and their appearance was noted (steeliness or starchiness) (1).

The results of the experiments showed that the osmotic pressure of the soil solution had a marked influence on plant life. This influence was already appreciable when the seeds were germinating and could be followed throughout the development of the plant.

As the osmotic pressure increased, germination was retarded and tillering became less vigorous while the shooting of the corn and flowering were earlier, so that the whole period of vegetation was considerably cut down. An osmotic pressure of 7 atmospheres obtained by the addition of sodium chloride shortened the life of plants by 7 days in 1915 and by 10 days in 1914. The same pressure exerted by sodium sulphate only reduced the period by 4 days and the effect of nitrates were still less powerful, their solutions having no appreciable effect except at higher pressures altogether.

With regard to the development of the plant and the yields of straw and grain, it was found that there existed a definite optimum osmotic pressure for each of the salts tried. The point varied between 1 and 3 atmospheres according to the different salts and was marked by maximum crop yields and by a low ratio of straw to grain. As the osmotic pressure increased above this optimum point, harmful effects became evident, the development of the plant was suddenly checked and low yields of grain and straw were obtained. A rise in the osmotic pressure of the soil solution caused by the addition of all salts except nitrates lowered the ratio of straw to grain.

It was established in the earlier experiments that when the pressure of the soil solution is between 3 and 5 atmospheres, plants are able to make the available water go further than under normal conditions. This conclusion was fully confirmed by the experiments of 1914 and 1915. In Table I are given the mean coefficients of transpiration obtained with the normal soil solution and with solutions whose osmotic pressures varied from 1 to 5 atmospheres. The figures show that in general transpiration decreased as the osmotic pressure increased up to 5 atmospheres. Above that limit a further increase in the osmotic pressure resulted in a coefficient of transpiration higher than that for the normal soil solution. Magnesium chloride did not follow this rule. The fact that Bielotourka wheat uses less water per unit of dry matter produced when the osmotic pressure of the soil solution rises above normal, is of the greatest importance in arid regions where the climatic conditions are similar to those at the Besenchouk Station.

With the soil solution at its optimum osmotic pressure the wheat not only gave maximum yields, but both straw and grain contained maximum amounts of total and protein nitrogen. In other words, the plant was making the best possible use of the nutrient substances at its disposal to produce the largest amount of grain of the best quality. Table II summarises the results obtained in this connection.

(1) See *R.* Sep. 1916, No. 964. (*Ed.*).

TABLE I. — *Effect of the osmotic pressure of the soil solution on the coefficient of transpiration of wheat plants (average of the two years 1914 and 1915.*

| Salts used | Normal soil solution | Coefficients of transpiration — Abnormal soil solutions, osmotic pressure 1 | 2 | 1 | 1 |
|---|---|---|---|---|---|
| Sodium chloride | 365.6 | 359.5 | 346.6 | 362.8 | 358.4 |
| » sulphate | — | 364.3 | — | 342.6 | 349.4 |
| » nitrate | — | 352.0 | 335.7 | 317.9 | 382.8 |
| Ammonium chloride | — | 329.9 | 323.1 | 295.2 | 364.2 |
| » sulphate | — | 331.4 | 308.3 | 294.7 | 300.1 |
| » nitrate | — | 336.0 | 304.6 | 292.6 | — |
| Magnesium chloride | — | 350.4 | 358.8 | 328.7 | 413.8 |
| » sulphate | — | 366.9 | 360.0 | 343.4 | 359.2 |
| Calcium chloride | — | 347.7 | 329.6 | 341.8 | — |
| Mean for all salts | 365.6 | 348.6 | 333.3 | 329.9 | 314.8 |

TABLE II. — *Effect of the osmotic pressure of the soil solution on the yield and nitrogen content of wheat (average of the two years 1914 and 1915).*

| | Nitrogen of grain | | | | Nitrogen content of grain (per cent) | | | | Total amount of nitrogen per pot | | | |
|---|---|---|---|---|---|---|---|---|---|---|---|---|
| Control (normal soil solution) | = 100 | | | | = 1 | | | | = 100 | | | |
| Osmotic pressure of soil solution in atmospheres | 1 | 2 | 3 | 5 | 1 | 2 | 3 | 5 | 1 | 2 | 3 | 5 |
| *Salts grouped by their bases:* | | | | | | | | | | | | |
| Sodium salts | 112 | 99 | 89 | 57 | 1.12 | 1.29 | 1.41 | 1.58 | 125.4 | 127.7 | 125.5 | 90.1 |
| Ammonium » | 122 | 139 | 121 | — | 1.33 | 1.55 | 1.67 | — | 162.3 | 215.4 | 202.1 | — |
| Magnesium » | 96 | 94 | 82 | 62 | 1.11 | 1.10 | 1.22 | 1.37 | 106.6 | 103.4 | 106.1 | 87.7 |
| *Salts grouped by their acid radicles:* | | | | | | | | | | | | |
| Chlorides | 109 | 108 | 86 | 52 | 1.16 | 1.27 | 1.43 | 1.68 | 126.4 | 137.2 | 123.0 | 69.6 |
| Sulphates | 108 | 111 | 118 | 98 | 1.14 | 1.24 | 1.32 | 1.51 | 123.1 | 137.6 | 155.8 | 148.0 |
| Nitrates | 118 | 120 | 97 | — | 1,30 | 1.62 | 1.73 | — | 166.4 | 194.4 | 167.8 | — |
| Mean for all salts | 110 | 110 | 100 | 65 | 1.18 | 1.33 | 1.43 | 1.68 | 129.8 | 146.3 | 143.0 | 109.2 |

*Conclusions.* — In pot cultures it is possible to regulate the osmotic pressure of the soil solution by the addition of soluble salts (nutrient and otherwise) to the soil and thereby not only to increase the yields of grain and straw above the normal, but also to raise their nitrogen content. The study of the osmotic pressure of the soil solution is of special interest in relation to steppe and alkali soils where it is exceptionaly high and in the case of peat soils and bogs where it is exceptionally low. It may also throw light on the action of "indirect" manures, such as for instance that of sodium chloride which is frequently used on sugar beets. Hitherto its beneficial effect has been looked upon as due to a liberation of potash in the soil, instead of which it might be caused by a simple increase in the osmotic pressure.

It is recommended that the investigations be extended to other farm crops and the effect of the soil conditions determined not only on the nitrogen content of the plant but also on its other constituents, fats, sugars and starch.

1258 - **Investigations on the Microorganisms of Peat Soils, Waste and Cultivated.** — ARND T., in *Centralblatt für Bakteriologie, Parasitenkunde und Infektionskrankheiten*, Vol. 45, Nos. 8-25, pp. 554-574. Jena, June 19, 1916.

At the Bremen Station for peat investigations ("Moorversuchsstation"), a series of experiments were undertaken to determine the changes, if any, in the bacterial activity of peat soils brought about by drainage, liming and tillage. Only preliminary trials have as yet been accomplished, but these have already shown that there exists a striking difference in bacterial activity between waste and cultivated land. Soil samples were taken from twelve different parts of the experimental ground and were tested for: ammonification, nitrification, denitrification, the decomposition of cellulose, the presence of *Azotobacter* and the fermentation of mannite. The results may be summarised as follows;

1) Ammonifying organisms were found in all samples, even in the most strongly acid subsoils from waste land. They were far more active in surface soil than in the underlying layers, the actual numbers in the subsoil being very small and their vitality reduced. Ammonia production also occured much more freely with samples from soils which had been tilled, manured or limed than with samples from land of the same type which lay waste. An application of dung to a peat soil which had a very low bacterial content resulted in a considerable and lasting increase in the numbers and activity of the putrifying organisms. The breaking up of waste land only affected the bacterial life in the top 8 in. of soil; samples of subsoil (8 to 16 in. deep.) showed about the same ammonifying power whether taken from waste or cultivated land.

2) None of the samples from waste land contained any active nitrifying organisms, neither did samples from cultivated land which was either unlimed or had only received lime at the rate of half a ton of lime per acre. On the other hand soil which had received one ton of lime per acre exhibited a marked power of nitrification, but it would seem that an even heavier dressing would be required in order to obtain an active develop-

ment of the nitrifying organisms in the peat itself. Not a single subsoil examined, whether obtained from waste or cultivared land, contained any organisms capable of producing nitrites or nitrates.

3) Every sample tested was able to reduce nitrates, the surface soil of waste land being hardly more active in this respect than its subsoil. Where the land was cultivated, however, the reduction of nitrate took place much more readily with the surface than with the subsoil, and the same was true of cultivated surface soils as compared with the surface soil of waste land, more especially where tillage had been accompanied by liming. No differences were obtained in the denitrifying power of the various subsoils.

4) All surface soils exhibited a greater power for decomposing cellulose than their corresponding subsoils, the difference being very small in the case of waste land and much larger for cultivated land. Cultivated, limed or manured surface soil was also much more active than waste surface soil. As with ammonification and nitrification, maximum decomposition of cellulose occured when the soil had previously received a dressing of dung.

5) In no sample was *Azotobacter* present. Surface soils and cultivated soils fermented mannite more readily than subsoils and waste soils, tha maximum effect being again obtained with the dunged plot.

1259 – **Reclaiming the Everglades of Florida.** – WILLEY A. W., in *Scientific American*, Vol. CXV, No. 12, pp. 258-259. New-York, September 16, 1916. OPENING UP LAND FOR CULTIVATION

In the south of Florida there are some 4 million acres of swamp known as the "Everglades" which are being converted into agricultural land by drainage. An accurate topographical survey of the district had shown that

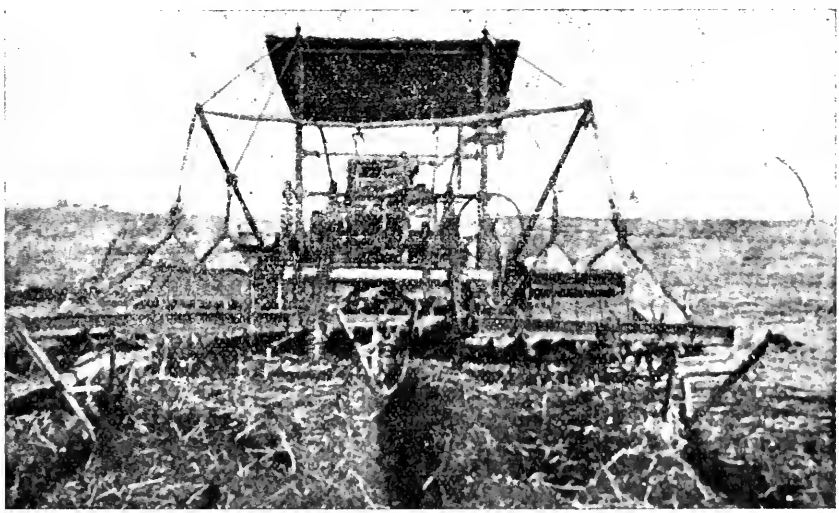

Machine used for digging trenches and pulverising the soil

the swampy condition of the area was due to the Okeechopee lake and that as the rim of the lake was some 20 ft. above the level of the tidal river, the reclamation could be effected by merely cutting canals through the rock rim of the lake and allowing the water to flow away by force of gravity. The first reclamation project which has already been carried into effect included the excavation of 4 canals of a total length of 200 miles and of an average cross section of 5 × 60 ft.; 6 dredges were employed for the purpose. For the making of the smaller ditches other machines were used. One of these is illustrated in the adjoining fig.; it not only dug trenches but pulverised the soil at the same time, moving across the land at the rate of 500 ft. in 10 hours. Another ditcher used was capable of cutting a trench 400 ft. long 6 ft. deep and 3 ft. wide in one day. The total length of the lateral canals amounted to 2000 miles, draining an area of 1 ½ million acres.

The success of the enterprise has been so complete that a second project is now in hand for reclaiming the remaining 2 ½ million acres and will be completed within a year. As soon as the land is ready it is sold by the State Government and divided up into farms, settlers being attracted from all the other parts of the United States.

The total cost of reclamation has been estimated at 4 ½ million dollars.

METHODS OF SOIL CULTIVATION

1260 – **Experiments in the Application of Electricity to Plant Production, in England.** — INGVAR JORGENSEN, in *The Journal of the Board of Agriculture*, Vol. XXIII, No. 7, pp. 671-672. London, October 1916.

Experiments on the effect of overhead electrical discharges on crops were continued in 1915, a crop of oats being grown under this treatment at Lincluden Mains, Dumfries.

The crop was grown on ground which had been used for the three previous years for similar experiments with potatoes. The experimental ground consisted of two plots each of 1 ½ acres lying side by side, one of them receiving the electric discharge, the other being used as the control. The two plots were separated by a well-earthed wire screen reaching to a height three feet above the level of the charged network. It was hoped by this means to prevent any considerable leakage of current from the electrified area to the control. Readings of a sensitive electrometer showed that the screen much reduced the amount of discharge reaching the non-electrified area, but it did not do away altogether with the leakage.

The season was a particularly dry one, accompanied by a scorching sun, and as the soil is of a very porous nature the conditions were not conducive to a heavy crop.

From the early stages of growth the crop on the electrified area showed a marked superiority in comparison with that on the control area and did not suffer from the prevailing drought to the same extent.

The discharge was run for 557 hours during 108 days, i. e., an average of 5 hours a day.

The two crops when ready for harvesting were cut, threshed and weighed separately. The weights of the two crops are given below, and

show that the electrified crop, as compared with the non-electrified, showed the remarkable increase of 30 per cent in grain and 58 per cent in straw.

| | Total grain. | Total straw. | Increase of grain. | Increase of straw. |
|---|---|---|---|---|
| Electrified . . . . . | 1 309 lb. | 2 476 lb. | 30 per cent. | 30 per cent. |
| Control . . . . . | 1 008 lb. | 1 572 lb. | — | — |

An analysis of the grain and straw from the two crops was undertaken at the University of Leeds. The figures obtained for the experimental and control crops showed practically no difference apart from those accounted for by experimental error. Feeding experiments are needed before it can be concluded with certainty that the discharge has been without effect on the food value of the oats, but is is extremely unlikely that any difference would be demonstrated between the two crops.

1261 – **The Industrial Uses of Seaweed, More Especially as Manure.** — GLOESS P., in *Moniteur Scientifique du Docteur Quesneville*, Vol. VI, Part I, No. 893, pp. 97-108 ; Part II, Nos. 896 and 898, pp. 169-177 and 217-223. Paris, May, August and October 1916. MANURES AND MANURING

The industrial uses of seawed are classified as follows :

I. The general use of seaweed more particularly for manure.

II. The use of plants other than algae, especially grass wrack (*Zostera* spp.) as a source of :

*a*) fibre

*b*) paper

*c*) cellulose

*d*) potash manure obtained as a bye-product.

III. The use of red algae (Rhodophyceae) for the production of gelose.

IV. The use of the brown algae (Phaeophyceae) especially the Laminariaceae (kelp) which contain no gelose,

*a*) as a source of algin for the production of :

I) waterproofing, dressing and gum substances ;

II) food substances ;

III) a natural algin product containing iodine ;

IV) sodium peralginate, a bleaching agent ;

V) various other materials for industrial purposes.

*b*) as a source of potash salts ;

*c*) as a source of other salts ;

*d*) as a source of iodine and bromine.

*The use of seaweed as manure.* — On the coats of France (Brittany), England, Scotland, Ireland and in the Channel Islands two classes of seaweed are gathered : 1) the kinds that grow between tide marks (*Zostera* spp., red algae and *Fucus* spp.); 2) the drift weed which is washed up from below low-water mark (*Laminaria* spp., *Zostera* spp.). In the districts where it is collected it forms one of the principal manures and enables the land which is naturally poor to become productive.

On the Pacific Coast of the United States large quantities of kelp are harvested annually (1). The writer points out that a certain amount of waste is incurred by not recovering the iodine and bromine contained in the kelp. These elements being more valuable for chemical or pharmaceutical uses than for agriculture, their extraction would seem advisable especially as their recovery would enable the manure to be sold at a lower price.

*The extraction of potash salts from seaweed.* — The seaweeds used for this purpose consist of *Macrocystis* spp., *Nereocystis* spp. and *Pelagophycus* spp. which form the "giant kelp" of the American Pacific coast, and *Laminaria flexicaulis, L. Cloustoni, L. saccharina, Saccorhiza bulbosa* which are found in Europe. The average chemical composition of fresh European seaweed is as follows:

- Water . . . . 85 %
- Dry matter . 15 %
  - Mineral matter 7 %
  - Organic matter 7 %
    - Potash salts . 4 %
      - Chlorides . . 3.85 %
      - Iodide . . . 0.13 %
      - Bromide . . 0.01 %
    - Other salts . . 3 %
      - Chlorides, sulphates, phosphates of sodium, magnesium, calcium, iron, manganese.

Every year about 100 000 tons of fresh seaweed are gathered in France and 250 000 tons in the United Kingdom and Norway. From the 350 000 tons the following products are obtained: 175 tons of iodine, 7000 tons of potash salts, 15 000 tons of soda ash. By improved methods of manufacture the yield of iodine and potash salts might well be doubled and at the same time 10 000 tons of mineral salts other than potash, 175 tons of bromine and 28 000 tons of raw algin could be produced. With the use of cutters the seaweed harvest could also be increased.

The potash salts, which consist chiefly of the chloride, make up about 4 per cent of the fresh seaweed or 25 per cent of the dry matter. They are extracted by lixiviating the kelp, or may be obtained as an efflorescence on drying the seaweed by heat. The latter process yields a substance containing 65 per cent of potassium chloride (41 per cent of $K_2O$) which may be used as such for manure or subjected to purification as in the case of Stassfurt salts.

*Other salts extracted by lixiviation.* — These make up 43 per cent of the total salts, 3 per cent of the fresh seaweed or 20 per cent of the dry matter. They consist of about 50 per cent of sodium chloride, and 50 per cent of the other salts, and though much less valuable as fertilisers than the potash salts, they are used for that purpose in France.

(1) See *R.* 1912, No. 1147; *R.* 1914, No. 212; *R.* 1915, Nos. 467 and 688. (*Ed.*)

*Extraction of iodine and bromine.* — Inorganic iodides and bromides are easily obtained from kelp by simple lixiviation with weak acid or water. Organic compounds of iodine and bromine on the other hand cannot be completely extracted without destroying the mucilaginous residue unless an oxidising agent be employed in a faintly acid solution, according to the process patented in various countries (France, Germany, Austria, Belgium, England, Norway, United States and Japan).

1262 – **Green Manuring with Leguminous Crops in Java.** — RANT A., in *Mededeelingen van het Kina Proefstation*, No. III. Batavia, 1915.

At Tjinjiroen, in the mountainous region of Java, experiments were carried out on the growth of various leguminous crops for green manure. The trial ground was 5160 ft. above sea level. An account is given of the plants tested with special reference to the formation of root nodules and to the appearance of disease.

1263 – **The Solubility of Phosphoric Acid in Mineral, Basic and Calcined Phosphates, and in Basic Slag.** — AITA A., in *L'Italia Agricola*, Year LV, No. 10, pp. 446-453. Piacenza, October 15, 1916.

Since the middle of the nineteenth century phosphatic manures have been employed chiefly as superphosphate and basic slag. In recent years, however, attempts have been made to re-introduce the use of natural phosphates in one of the three following forms: 1) ground phosphate which consists of the raw mineral reduced to a very fine state of division ; 2) calcined phosphate or "thermophosphate" which is the mineral phosphate after simple calcination ; and 3) basic phosphate, a product obtained by calcining the raw mineral with basic or alkaline substances. The writer has studied the solubility of mineral phosphates, more especially the less soluble ones, (*Annali di Chimica applicata*, July and August 1916) and gives a summary of his work in the present paper.

*Mineral phosphates.* — Recent experiments have shown that :

1) The power of assimilating phosphoric acid from mineral phosphates varies with the species of the plant, being marked in crucifers and hardly perceptible in cereals.

2) A very fine state of division increases the availability of mineral phosphates.

3) With phosphates in general, and particularly with the less soluble phosphates, the manurial value is dependent on : *a*) the lime content of the soil ; *b*) the nature of the nitrogenous manure applied with the phosphate ; *c*) the magnesium content of the soil. These three factors are referred to as the *calcium, lime and magnesium factors.*

It has been maintained that the slow availability of phosphoric acid in mineral phosphates is reflected in a low solubility in 2 per cent citric acid solution ; but this hypothesis has since been disproved, it being shown that mineral phosphates yield the whole of their phosphoric acid to 2 per cent citric acid provided a sufficient amount of the solvent be used and the extraction be continued for a sufficient length of time. The writer subjected different types of phosphates (Tunisian, Algerian, Florida and Pacific)

to repeated extractions with 2 per cent citric acid, the samples being hand shaken for an hour at room temperature. It was found that the amount of phosphoric acid dissolved in the consecutive extractions varied not only according to the nature of the mineral and its lime content, but also according to its state of division :

1) Nodular and rock phosphates (Land Pebble, Medulla, Angaur) yielded their phosphoric acid less readily than the more friable minerals of a sedimentary origin, nodular phosphates requiring 7 extractions and rock phosphate 5 or 6 extractions for the complete removal of the phosphoric acid.

2) A Bir el Afou phosphate, ground to a degree of fineness which allowed 85 per cent of it to pass through a sieve with 100 meshes to the inch, yielded 29 per cent of its phosphoric acid in the first extraction and required 4 further extractions for the complete removal of the phosphoric acid, whereas an Egyptian phosphate of 58 per cent fineness only yielded 21.71 per cent of its total phosphoric acid to the first extraction, and for the complete removal of the phosphoric acid, 5 further extractions were necessary.

3) Calcium carbonate when present, neutralised the citric acid, thereby reducing its solvent power in proportion to the amount of carbonate present. In the first few extracts obtained from a calcareous sample, a Gouraya phosphate containing 21.22 per cent of calcium, the phosphoric acid increased whilst the carbonate decreased. On the other hand with Constantine, Gafsa and Bir-el-Afou phosphates containing only 13.27, 10.10 and 9.95 per cent of carbonate respectively the amounts of phosphoric acid found in the extracts followed a regular descending curve from the first to the last of the extractions.

In a second series of experiments a study was made of the influence of the other salts used as fertilizers (sulphates, nitrates and chlorides of ammonium, potassium, sodium and magnesium) on the solubility of phosphoric acid. Citric acid solutions were prepared containing increasing fractions of the equivalent weights of these salts and in each case 250 cc. of the solution was shaken up with 2.5 gms. of the raw phosphate for an hour. With the system ; tricalcic phosphate, phosphoric acid, calcium citrate and citric acid it was found that the solvent action of citric acid ceases on the establishment of equilibrium between the free phosphoric acid and the calcium citrate which is formed. The presence of a salt of a strong, acid, such as potassium sulphate, upsets this equilibrium by causing a double decomposition between the added salt and the calcium citrate ; potassium citrate is formed and acts further on the tricalcium phosphate until a new equilibrium is established, this time between the two salts with a common ion, potassium sulphate and potassium phosphate. Nitrates and chlorides of ammonium, potassium, sodium and magnesium behave in an analogous manner. On the other hand the presence of calcium salts (chloride and nitrate) inhibits the solvent effect. The general conclusion may be drawn that the solubility of phosphoric acid is increased by the addition of salts of strong acids giving rise to soluble phosphates, and is decreased by the

addition of salts of acids weaker than citric acid owing to the fact that in such cases (*e. g.* carbonates) the citric acid displaces any such acid radicle and loses part of its solvent power in the process.

Assuming that the reactions in the soil are analogous to those described above, the following practical conclusions may be drawn: 1) Fertilizers containing calcium salts lower the availability of phosphates; 2) nitrogen and potash manures in the form of sulphates, nitrates and chlorides increase the availability of phosphates in the order given; 3) magnesium sulphate, nitrate or chloride acts in a similar fashion.

*Calcined and basic phosphates.* — The writer states that the calcining process merely raises the cost of the product without rendering the phosphoric acid more soluble.

With regard to the production of basic phosphates, so far the only process working on an industrial scale is in Sweden where 20 000 tons of « Wiborgh » phosphate are turned out per annum. Ground apatite is heated with alkaline sulphate to a red or yellow heat and the product contains phosphoric acid which is soluble in 2 per cent citric acid. It has been thought that the tricalcic phosphate combines with the alkali at high temperatures to form a tetracalcium phosphate ($5CaO.\ 2No_2O.\ 4P_2O_5$ or $5CaO.\ 2K_2O.\ 4P_2O_5$) analogous with the one believed to exist in basic slag. The writer, however, does not accept the view that this compound exists either in Wiborgh phosphate or in basic slag, and believes that the increased quantity of soluble phosphoric acid in the former is due to the presence of alkaline sulphates.

*Basic slag.* — A series of experiments was undertaken to throw light on the question as to whether the solubility of the phosphoric acid in basic slag be due to some of the secondary products contained in the slag. The raw phosphates were treated with citric acid in the presence of: iron and aluminium filings, ferrous sulphate, ferric chloride, aluminium sulphate, manganese sulphate and hydrate and magnesium silicate. The following results were obtained:

1) Silicates exerted a retarding effect on the solubility of the phosphoric acid, silicic acid being weaker than citric acid. Manganates behaved in a similar manner.

2) Ferrous sulphate and manganese sulphate behaved exactly like ammonium sulphate, alkaline sulphates and magnesium sulphate, the solubility of the phosphoric acid increasing with the concentration of these salts.

3) The same is true in the case of ferric and aluminium salts the presence of a very small quantity of these salts being sufficient to increase markedly the solubility of the phosphoric acid. It is stated that the increased solubility here is due to the combined effect of two distinct causes: *a*) the retarding of the equilibrium by the slag, and *b*) the formation of a complex salt of iron or aluminium with citric or phosphoric acid. This complex salt undergoes little dissociation and causes a radical change in the equilibrium of the system: tricalcic phosphate, phosphoric acid, calcium citrate, citric acid and ferric or aluminium salts. The fact that similar results were

obtained whether iron or aluminium filings were employed confirmed the deduction that the citrophosphate group was intimately connected with the iron or aluminium.

It has been shown previously that all the secondary products contained in basic slag are dissolved by 2 per cent citric acid to an extent which varies with the nature of the slag. The writer found that by using a solution of saccharose to remove the lime the solubility of the phosphoric acid was increased, likewise that of all the other constituents. The secondary compounds of slag can therefore be classified into two groups: 1) those which hinder the solubility of phosphoric acid (lime, silica, silicates and manganese), and 2) those which assist it (sulphates, iron and aluminium). Amongst the latter group the sulphates may be neglected as they are only present in minute quantities but the presence of the two metals not only counterbalances the effects of the first group of substances, but actually exerts a definite solvent action on the phosphoric acid.

*Conclusions.* — Basic slag like the mineral phosphates contains phosphoric acid in the form of tricalcic phosphate. Their relatively high degree of solubility in citric acid as compared with mineral phosphates is attributed to the presence of iron and aluminium in the slag. The difference in the solubility of slags may be due to any or all of the following three causes: 1) a variation in content of iron and aluminium; 2) the percentage of soluble phosphoric acid present; 3) the presence of other bodies which exert a retarding effect on solution.

1264 – **Nitrate of Soda and Ammonium Sulphate on Sugar Cane in Java.** — GEERTS J. M., in *Mededeelingen van het Proefstation voor de Java-Suikerindustrie*, Vol. VI, No. 9, pp. 223-305. Soerabaja, 1916.

Experiments have been carried out in Java during the last few years to compare the manurial value of sodium nitrate and ammonium sulphate for sugar cane (1). These have shown that ammonium sulphate gives the best results on sandy soils and sodium nitrate on heavy land.

Where nitrate was used no deleterious action on the structure of the soil was observed, nor is there any likelihood of this occuring in Java as the nitrate is not applied every year and further the land is irrigated. Owing to its extreme solubility nitrate is specially adapted to regions of low rainfall and gave the best results when applied in two or three dressings. It did not retard the ripening of the crop.

In Java ammonium sulphate is the more suitable manure in the majority of cases, and, unless supplies fail or the price of nitrate falls, it will continue to be the more popular fertiliser.

1265 – **Manurial Trials in Java.** — DE JONG A. W. K., in *Mededeelingen van het Agricultur-Chemisch Laboratorium*, No. XII, pp. 1-27. Buiterzorg, 1916.

A report is given of manurial trials in Java during the year 1915. With *manioc*, sodium nitrate had an excellent effect especially when

(1) See *R.* June 1916, No. 647.

used in conjunction with superphosphate or basic slag. It proved superior to ammonium sulphate.

With *rice*, calcium cyanamide and ammonium sulphate were equally successful and both were superior to nitrate. Applications of molasses had no appreciable effect. A double superphosphate was tested against Angaur phosphate and it was shown that in order to obtain the same results the dressing of Angaur phosphate had to be three times as large as that of the double superphosphate. The land was treated with sulphuric acid to destroy the weeds, and no ill effects could be detected on the subsequent rice crop.

With citronella grass (*Andropogon Nardus*), vulcanphonolite (1) produced no effect. The best results were obtained with a complete manure consisting of ammonium sulphate, potassium sulphate and double superphosphate.

1266 – **The Flora of the Belgian Coast.** — MASSART J., (Brussels University) in *Annales de Géographie*, Year XXV, No. 137, pp. 321-327. Paris, September 15, 1916.

AGRICULTURAL BOTANY, CHEMISTRY, AND PHYSIOLOGY OF PLANTS

An account is given of the evolution of the flora on the Belgian coast with special reference to its origin. No endemic species has been evolved on the Belgian coast. Fossil plant remains are rarely found, but such as are found, *e. g.* the sea buckthorn (*Hippophae ramnoides*) would indicate that in the pleistocene period when the region was inhabited by reindeer, the land was occupied by a flora adapted to a colder zone, and that with the return of a more temperate climate both fauna and flora retreated northwards.

The majority of the members of the present flora must have originated by immigration. The writer classifies the species into two groups, a smaller one containing plants peculiar to the coast land and a much larger group made up of the more abundant species. The latter are found equally on the more inland tracts and for the most part originated from the Flemish sands. A few calcicole species such as *Helianthus vulgare* must have migrated from the more distant calcareous regions of the Meuse or the Pas de Calais. Finally the true marine plants whether distributed on the dunes or on alluvial land can only have come from other coastal regions. The study of the geographical distribution of 69 of these species in Europe revealed the fact that the majority of the species are characteristic of a warmer climate. In other words the migrations from the south have been far more frequent than those from the north.

1267 – **Nitrogen Fixation, Nitrification, Denitrification and the Production of Sulphuretted Hydrogen by Bacteria in the Arctic Ocean.** — ИСАЧЕНКО Б. Л. (ISSATCHENKO B. L.) in *Журналъ Опытной Агрономіи имени П. С. Коссовича* (Review of Agricultural Experiments dedicated to the memory of P. S. KOSSOVITCH), Vol. XVII, No. 2, pp. 175-179. Petrograd, 1916.

In 1906, a scientific and commercial expedition left the Murmanian coast (Province of Archangel) and travelled to the 73° lat. north on the coast of Novaya Sembya (an island bounding the sea of Kara on the west.) A

(1) The trade name given to a ground phosphate.

full report of the bacteriological work accomplished on this expedition has recently been published by the Russian Department of Agriculture (1) and the present paper merely summarises the report.

The bacteria in the Arctic Ocean were investigated in order to determine their influence, direct or indirect, on the organic life of the ocean, In 1890-1891, investigations of a similar nature were already being carried out by Russians in the Black Sea and the production of sulphuretted hydrogen was observed. But with regard to the northern waters, though there were grounds for believing that they contained an active bacterial flora, actual experimental data was very scarce. In 1899 some results were published stating that from 11 cc of water only one colony had been obtained. In 1907 investigations were begun in the waters of the South Pole, but these hardly dealt with the action of specific organisms. Nevertheless it was the results of these experiments together with the fact that denitrification does not usually take place at temperatures much below about 20° C. which gave rise to the theory known as Brandt's hypothesis, *i. e.* that the distribution of plankton in the ocean is controlled by the supply of combined nitrogen according to Liebeg's Law of the Minimum and that the combined nitrogen in its turn is dependent on the activity of the denitrifying organism; therefore that the relative abundance of plankton in the arctic seas compared with warmer waters is due to the absence of denitrifying bacteria.

In the Murman expedition *Clostridium* and *Azotobacter* were isolated from the mucilaginous surface of seaweed on which they live and from which they draw the necessary energy for growth and nitrogen fixation. Both organisms developed best in media containing sea salt. In sea water as in soil they were always accompanied by Winogradski's $\alpha$ and $\beta$ bacilli. It would appear that a certain amount of symbiosis must occur between the nitrogen fixing organisms and the seaweed and that the organisms provide a very useful addition to the seaweed's food supply, given the natural deficiency of nitrogen in sea water.

Though nitrifying bacteria were found in the Gulf Stream at 72° lat. north near Iekaterininsk and in the Ugorskij Sharr, their presence in arctic seas is still unproved. It is pointed out that the low temperature, which might be looked upon as causing complete inhibition, while it slows down the process of nitrification, never entirely stops it even at 2° C.

Denitrifying bacteria were found fairly abundantly in the Arctic Ocean and they were studied in some detail. Even after four years. cultures of non spore-forming bacteria retained the power of decomposing nitrates and setting free nitrogen. Under perfectly anaerobic conditions

---

(1) Б. Л. Исаченко, Изслѣдованія надъ бактеріями Сѣвернаго Ледовитаго Океана. Съ 3 таблицами и 63 рисунками I—VII + 297 стр. (Труды Мурманской Научно-Промысловой Экспедиціи 1906 года. Изданіе Департамента Земледѣлія. Петроградъ. 1914). [Issatchenko B. L., Research on the bacteria of the glacial Arctic Ocean, 297 pp., in *Report of the Scientific and industrial expedition of Murman* (1906). Petrograd, 1914).

denitrification was suspended, but a very limited supply of oxygen ("microaerophily") favoured the process. Low temperatures of 6° to 3° C. did not inhibit denitrification. As a result of his experiments, the writer concludes that denitrification is quite possible in the Arctic Ocean and that Brandt's hypothesis is not confirmed by the facts observed.

Finally, arctic waters were shown to contain two kinds of bacteria capable of producing sulphuretted hydrogen, one from sulphates (*Microspira aestuarii*) and the other from organic matter. It is pointed out that the formation of black mud on the coasts of Murman and Novaya Zembya and in Moghilnoie Lake in the Island of Kildine is due to the activity of these bacteria, more especially *M. aestuarii*.

1268 – **The Optimum Temperature of a Diastase is Independent of the Concentration of Substrate and Enzyme.** — COMPTON A., in *Annales de l'Institut Pasteur*, Vol. XXX, No. 9, pp. 496-502. Paris, September 1916.

In a previous investigation (1) it has been shown that the optimum temperature of a salicinase from sweet almonds is independent of the concentration of the substrate and of the enzyme itself, provided the duration of the enzyme action remain the same. In order to determine whether the statement would hold for enzymes in general, a similar series of experiments was carried out with the maltase of *Aspergillus Oryzae* or takadiastase. Kahlbaum's purified maltose was employed and the diastase solution was obtained by macerating 1 gm. of the diastase powder in 100 cc of pure water at room temperature. Then using solutions of hydrolised maltose of the following molecular concentrations: M/5, M/10, M/20, M/30, the activity of the enzyme was determined at temperatures varying from 17° to 56.4° C.

To measure the influence of the concentration of the diastase, solutions were prepared with 0.1, 0.3 and 0.6 gms. of diastase powder per 100cc of water as well as the standard solution given above. Again, in all four cases the optimum temperature was 47° C.

The writer is of opinion that with diastase fermentations the optimum temperature is always independent of the concentration of the substrate and of the enzyme. This fact is of practical importance as it means that the molecular concentration of the substrate solutions is not an important factor and need not be considered when substances such as glycogen, starch and proteins are used, whose molecular concentration is often unknown.

1269 – **On the Reduction of Nitrate by Plants with Evolution of Oxygen.** — MOLLIARD M., in *Comptes Rendus des Séances de l'Académie des Sciences*, Vol. 163, No. 15, pp. 371-373. Paris, October 9, 1916.

There are grounds for believing that nitrates are reduced in the leaves of plants and it has been suggested that there might be a resulting evolution of oxygen. An attempt was made to show that such an action

(1) ARTHUR COMPTON, in *Proceedings of the Royal Society*, B. 87, 1914, P. 245; *Annales de l'Institut Pasteur*, Vol. XXVIII, 1914, P. 866.

took place by comparing the gas formed by two plants, one of which was supplied with nitrogen in the shape of nitrate and the other with ammonium salts.

Radishes were grown in long necked flasks each of which was connected with a mercury manometer. The culture medium consisted (per flask) of 60 cc of fine broken pumice and 40 cc of nutrient solution containing nitrogen at the rate of 6.0 gm. of ammonium chloride or 1 gm. of potassium nitrate per litre. Throughout the experiment aseptic conditions were maintained. As soon as the seeds had been sown the neck of each flask was sealed, enclosing a volume of air which amounted to about 120 cc. Every day manometer readings were taken not only for the flasks containing plants but also for a control flask, so that corrections for pressure and temperature could be made.

After 35 days a plant receiving ammonium chloride had produced 0.994 gms. of green weight or 0.153 gms. of dry matter. The internal pressure of the flask fell for the first 9 days and then rose till it attained 2.11 cms. of mercury, which was equal to 2.77 cc of oxygen and brought the total amount of oxygen up to 22.5 per cent of the atmosphere in the flask. At the end of the experiment the respiration quotient was determined. A value of 1.02 was obtained.

Where the plant was supplied with nitrate, 0.264 gms. of dry matter were produced in 35 days and the internal pressure rose to 8.6 cms. of mercury. The oxygen in the flask was increased by 13.74cc, raising the percentage in the flask to 28.8. The respiration quotient was 1.07.

The fact that the flask containing nitrate increased its pressure more than the flask containing the ammonium salt led the writer to conclude that oxygen had been set free from the nitrate. Assuming that the increase in pressure for plants growing in the same medium is proportional to the dry matter produced, the excess of oxygen in the nitrate flask was determined, and it was found that for every atom of nitrogen fixed by the plant two atoms of oxygen had been set free.

1270 – **The Assimilation of Iron by Plants.** — Сидоринъ М. И. (SIDORINE M. J.), *Московскій Сельско-хозяйственный Институтъ: Каѳедра Частнаго Земледѣлія. Изъ результатовъ вегетаціонныхъ и лабораторныхъ работъ. Годъ 19-й. Томъ X-й, подъ редакціей профессора* Д. Н. Прянишникова (Moscow Agricultural Institut, Prof. PRIANICHNIKOV'S Laboratory, Results of plant cultures in 1914) Vol. X, pp. 241-257. Moscow, 1916.

The assimilation of iron by plants was studied in a series of water cultures and sand cultures carried out at the Agricultural Institute at Moscow. A first experiment with water cultures was undertaken to determine the influence of carbonates on iron assimilation; the following nutrient solutions were used:

*a*) Knop's normal culture solutions containing per litre:

| | | |
|---|---|---|
| Calcium nitrate | 1 | gm. |
| Potassium nitrate | 0.25 | " |
| Potassium chloride | 0.25 | " |
| Potassium sulphate | 0.25 | " |
| Potassium phosphate | 0.25 | " |
| Ferric phosphate | 0.20 | " |

*b*) Knop's "acid" culture solution containing per litre:

| | |
|---|---|
| Calcium sulphate | 1.12 gm. |
| Ammonium sulphate | 0.45 " |
| Sodium nitrate | 0.42 " |
| Potassium phosphate | 0.27 " |
| Potassium chloride | 0.15 " |
| Magnesium sulphate | 0.12 " |
| Ferric phosphate | 6.20 " |

These were modified according to the scheme given below.

| | | | | | |
|---|---|---|---|---|---|
| 1) | Knop's normal culture solution | | | | |
| 2) | " | " | " | " | without iron. |
| 3) | " | " | " | " | " sulphur. |
| 4) | " | " | " | " | " magnesium. |
| 5) | " | " | " | " | + 8 gms. calcium carbonate. |
| 6) | " | " | " | " | + 4 " magnesium carbonate. |
| 7) | " | " | " | " | + 2 " sodium carbonate. |
| 8) | Knop's "acid" culture solution | | | | |
| 9) | " | " | " | " | + 8 gms. calcium carbonate. |
| 10) | " | " | " | " | + 4 " magnesium carbonate. |
| 11) | " | " | " | " | + 2 " sodium carbonate. |

In all cases where carbonates were present chlorotic plants were obtained, the effect of the three carbonates being identical. When a very little phosphoric acid was added, a green colour appeared at the base of the topmost leaves. The amount added was sufficient to give the nutrient medium an acid reaction, and in a later set of experiments the phosphoric acid was replaced by hydrochloric, sulphuric and nitric acids with the same result, showing that the antichlorotic action was due to the acidity of the solution and not to the presence of phosphorus. The exclusion of magnesium had no appreciable effect on chlorosis, but the plants without sulphur were affected though not quite in the manner described by MAZÉ. According to the latter, chlorosis caused by the absence of sulphur is identical with chlorosis caused by the absence of iron, whereas in the present experiments, sulphur chlorosis was somewhat later in appearing and the colour of the leaves was never quite the same in the two cases.

For the sand cultures the same scheme was adopted as for the water cultures but Hellriegel's nutrient solution was substituted for Knop's. Pots with a capacity of 4 ½ litres were used. The results obtained were somewhat different from those of the water cultures and this was attributed to the nature of the medium which was never quite neutral.

The phenomenon of chlorosis was then studied in greater detail by the method of "isolated nutrition" or in other words by dividing the root system into two parts, one of which received the iron alone, or iron and carbonate alone, and the other the rest of the food solution. Where a carbonate was added, chlorosis appeared as before, but where iron was used alone, variegated leaves were obtained. In the majority of cases one half of each leaf was yellow and the other half green, but sometimes there was a green band in the middle with yellow on either side, or the leaf might

even have a yellow ground with green ribs. This last phenomenon was observed for the first time 8 or 9 days after the experiment had begun on the third, fourth and fifth leaves. Small drops of ferric chloride placed on the yellow parts of the leaves immediately caused green spots to appear. As the plant got older the coloration changed. The sixth leaf always had green ribs and the seventh was wholly green; the variegations of the fifth tended to become less sharply defined, but the third and fourth leaves remained unchanged.

When a few drops of phosphoric acid were added to the cultures containing carbonates, a faint greenish colour appeared at the base of the leaves after 3 or 4 days; and plants grown in pots with calcium carbonate were injected with 0.25 cc of ferric chloride solution (0.03 per cent) which produced a green coloration in the parts above the point of injection. In all the experiments on variegation, not only maize was used but also sorghum, barley, buckwheat and beans; the last two plants, however, did not behave in the same manner as the other three.

A last set of experiments was carried out with the nutrient solutions of Hellriegel, Prianichnikov and Crone in order to test Benecke's theory of chlorosis which was fully confirmed.

*Conclusions.* — When plants are grown in culture solutions containing free carbonates, the chlorosis produced is due to the alkalinity of the carbonates, more especially of calcium carbonate. This alkalinity is not however a direct cause of chlorosis, but acts indirectly by making the iron inaccessible to the plant. Such effects may also occur under natural conditions if the food solution be physiologically alkaline.

The property possessed by iron of forming almost insoluble salts with phosphorus prevents iron assimilation from taking place in nutrient solutions.

Chlorosis may be caused by absence of sulphur as well as by absence of iron.

There are often essential difference between the results obtained in sand and in water cultures.

Iron is particularly interesting in its strictly localized assimilation by plant tissues, as shown by the experiments on "isolated nutrition". This should prove a means of obtaining valuable material for the study of problems connected with the internal structure of plants.

1271 – **Influence of Calcium and Magnesium Compounds on Plant Growth.** — WYATT F. A., in *Journal of Agricultural Research*, Vol. VI, No. 16, pp. 589-619. Washington, D. C., July 17, 1916.

Experiments were planned with the idea of studying the effects of calcium and magnesium upon plant growth when applied in different natural and artificial forms. Studies were made to determine the amount of calcium and magnesium which plants could tolerate. The relation between the ratio of these two elements in the plants, in the soils, and in the materials supplied was also studied.

Dolomite, limestone, magnesite, calcareous soils, and brown silt loam were used as sources of the natural forms, while prepared materials, such

as the carbonates, chlorides, and sulphates, served as sources of the artificial forms. Increasing amounts of the various forms were used, also a variance in the ratio of calcium to magnesium was employed. The earlier applications varied from 0.1 to 0.6 per cent of magnesium added in magnesium carbonate and in magnesite. Later the following amounts were employed: 2,6, and 10 per cent of magnesium in magnesite; 10 and 12.7 per cent in dolomite; 0.1,0.01, and 0.001 per cent of magnesium in the carbonates, chlorides, and sulphates.

Earthen pots 6.5 ins, in diameter by 7.5 ins. in depth were used. Each pot contained 13.2 lbs. of sand, while in the soil series each contained 8.8 lbs. of brown silt loam. Sand and soil were used as mediums of control, and to these two materials were added the various forms and amounts of calcium and magnesium.

Various methods were pursued in extracting the sand. At first dilute hydrochloric acid was kept in contact with the sand for 48 hours, but this failed to remove all the calcium and magnesium. Later the sand was extracted with stronger acid (1350 cc of concentrated hydrochloric acid with 1000 cc of distilled water) for periods of from 9 to 14 days. Sand was also digested on a steam bath for 4 days with this same strength acid. None of the above processes were able to remove all the calcium and magnesium from the sand. After treatment it still contained:

| | Calcium | Magnesium |
|---|---|---|
| Extraction with dilute acid for 2 days | 0.0142 per cent | 0.016 per cent |
| " " strong " " 4 " | 0.0128 " " | 0.0089 " " |

At intervals varying from 10 to 14 days, nutrient solutions were added to the pots and every 10 days the pots were brought to standard weight by watering with distilled water. The experiments were run in greenhouses and the principal crops used were: wheat (*Triticum* spp.), alfalfa (*Medicago sativa*), soybeans (*Soja max*) and cowpeas (*Vigna sinensis*). Oats (*Avena sativa*), clover (*Trifolium pratense*), timothy (*Phleum pratense*), and sweet clover (*Melilotus alba*) were also used to test the effect of artificial carbonates upon germination.

The experiments reported here extended over a period of three years (1912 to 1915) and include approximately 300 pot cultures and upwards of 300 duplicate determinations of calcium and magnesium.

Difficulty was experienced in finding a medium that was free from calcium and magnesium, and which would still approach soil conditions. Attempts were made to grow plants in aluminium turnings but without success, probably due to the formation of some aluminium salts when the plant foods were added.

Wheat and cowpeas grown in granular paraffin without the addition of calcium and magnesium showed in the total plant only an amount equal to that furnished by the seed.

The difference in the medium in which the plants were grown caused different effects upon the plants. Brown silt loam was a better medium than sand when treated with chemically pure magnesium carbonate, even

though it already contained 25 times as much calcium and magnesium as did the sand. Still sand would have an ameliorating effect when compared with water cultures. JENSEN found that in quartz sand a much higher concentration of salts was required to cause death than in water cultures.

It is quite generally believed that plants have to some extent a selective absorption. The results here seem to indicate such a condition, for the dolomites used tend to go into solution in a molecular ratio, but the plants failed to take them up in this ratio. The tendency of the plants under these conditions was to take up relatively larger molecular proportions of magnesium than of calcium. Analysis of the plants show that they do not necessarily take up calcium and magnesium in the same ratio as applied, as, for example, in dolomite C3 the ratio of calcium to magnesium is 5 : 5.2, while the plants may and do take it up in a ratio of 5 : 7 or 5 : 3.95.

In the case of the addition of 25 per cent of magnesite the ratio of calcium to magnesium was 5 : 125, while in some of the plants grown in such treatment the ratio varied from 5: 15 to 5: 21. Wheat grown in soil treated with 6 per cent of dolomite showed in the tops a ratio of 5 : 9.1 and in the roots a ratio of 5 : 4.35, or for the whole plant a ratio of 5 : 6.3, while in dolomite C1 it was 5 : 4.8. Alfalfa grown in the same treatment showed for the entire plant a ratio of 5 : 4.2, but when grown in soil treated with dolomite C3 the ratio for the total alfalfa plant was 5 : 3.95.

The chlorides of calcium and magnesium were more detrimental to wheat and soybeans than were the sulphates at concentration up to 0.1 per cent of magnesium. This amount of magnesium in the prepared carbonate entirely inhibited growth whereas lower concentrations gave better growth than either in the sulphates or chlorides.

Wheat 65 days old showed smaller percentages of calcium and magnesium than did similarly treated wheat at 53 days of growth, but the total amount of these two elements in the plants increased with the duration of growth.

Soybeans at maturity, or 80 days after planting, showed for the hay higher calcium and magnesium contents than at 53 days of growth, except in the case of the checks and those treated with extremely small quantities. Some of the samples showed as much as 73 lbs. of calcium and 25.2 lbs. of magnesium per ton when grown in a mixture of one-half sand and one-half calcareous soil, but when grown in soil containing 35 per cent of magnesite there were 22.9 lbs. of calcium and 42.3 lbs. of magnesium, per ton ; whereas the checks contained 5.8 lbs. of calcium and 5.6 lbs. of magnesium.

Wherever excessive amounts of magnesium were applied, there was a characteristic appearance of yellow leaves. The uppermost leaves became yellow and gradually died, while the lower leaves remained green. This condition is characteristic of magnesium sickness and just the reverse of the effects produced by translocation processes.

The general tendency is for the percentages of calcium and magnesium in the plants to increase with theincrease of size in application. Likewise a high magnesium content in the plant tends to accompany plant sickness,

as sickly and healthy leaves from the same soybean plant, showed respectively, 1.11 per cent of magnesium as against 0.88 per cent magnesium.

All varieties of the seed used contained more magnesium than calcium, while ordinarily the remainder of the plant contained more calcium than magnesium.

Nitrogen was applied to the legumes as well as to the cereals, so as to be sure that this was not the limiting factor.

*Conclusions.* — 1) Wheat, soybeans, alfalfa, and cowpeas grew normally either in 96 per cent of dolomite and 4 per cent sand, 100 per cent of magnesian limestone, or in sand containing 7 per cent of magnesite.

2) Dolomite up to 40 per cent proved beneficial to plant growth. These results indicate that dolomite and magnesian limestone will not be detrimental as applied in agricultural practice.

3) Applications of prepared magnesian carbonate up to 0.7 per cent caused no injury in brown silt loam, but 0.35 per cent prevented the growth of all plants tested in sand.

4) The crop yields and the ratio of calcium to magnesium within rather wide limits produced no marked differences in yields.

5) Different ratios of calcium to magnesium within rather wide limits produced no marked differences in yields.

6) Increasing the size of applications increased the calcium and magnesium content of plants.

7) A tolerance of calcium and magnesium occurred in all varieties of plants grown. With approximately identical yields, wheat straw grown in sand, brown silt loam, dolomite, and soil containing 35 per cent of magnesite showed calcium contents varying between 0.165 per cent and 0.547 per cent and magnesium contents varying between 0.132 per cent and 0.955 per cent.

8) Acid extractions failed to remove all the calcium and magnesium from the sand. There remained after the various extractions from 768 to 852 mgms. of calcium and from 540 to 960 mgms. of magnesium per 6000 gms. of sand.

9) The plants possessed a decided ability to obtain calcium and magnesium from sand extracted with strong hydrochloric acid, as borne out by the following example : Three crops of alfalfa removed from acid extracted sand 164.43 mgms. more calcium, and 90.4 mgms. more magnesium than was contained in seeds similar to those planted.

1272 – **Etiolated Cereal Plants.** — KALT B., in *Zeitschrift für Pflanzenzüchtung*, Vol. 4. No. 2. pp. 143-150. Berlin, June 1916. PLANT BREEDING

Many references have been recently made to the appearance of etiolated plants and the present paper describes some investigations made in 1915 at the Agricultural Institute of Halle University, Germany.

1. *Barley.* — A plant of a pure line of Groninger Wintergerste was crossed in 1915 with pollen from a pedigree plant of original Eckendorfer Mammut-Wintergerste. The $F_1$ generation gave about 30 perfectly normal plants from which 26 were chosen for propagation The descendants of 25 of these plants were quite normal in appearance, but from the last one (Elite $^1/_{11}$)

some white plants were raised in addition to the normal green ones. Ninety out of 100 seeds of Elite $^1/_{14}$ germinated; of these 75 plants were normally green and 15 (representing 16.6 per cent) were pure white without a trace of green colour. These white plants developed normally as long as the reserve food materials in the seeds lasted; they formed two leaves of normal size and thickness, but after 3 or 4 weeks they died because assimilation could not be carried on. Of the 75 green descendants of Elite $^1/_{14}$, 47 were eaten by insects during the year, 28 plants were harvested and 6 of these were selected for further investigation. All the seeds from these 6 plants were sown separately in autumn 1915. The other 22 plants were harvested and sown together.

The descendants of two of the 6 plants which were sown separately were normal and green, those from the other 4 being mixed. From the batch of 22 plants 10 960 seeds were sown and 9 646 plants were obtained, of which 8 412 were normally green and 1 234 were white. Theoretically these figures may be explained thus.

$C$ = presence of chlorophyll (dominant)
$c$ = absence of chlorophyll.

| | | | | |
|---|---|---|---|---|
| Generation $P_1$: | $C$ | | $c$ | |
| Generation $F_1$: | | $Cc$ | | |
| Generation $F_2$: | $CC$ | $Cc$ | $Cc$ | $cc$ |

If the 22 plants had all been equally prolific each plant would have produced 438 descendants, so that in $F_2$

| | | |
|---|---|---|
| $CC$ | $\underbrace{Cc \quad Cc}$ | $cc$ |
| 3 215 | 6 430 | 0 |

The 3 215 $CC$ are constant in the $F_3$ generation; the 6 430 $Cc$, on the other hand, subdivide thus:

| | | |
|---|---|---|
| $CC$ | $Cc$ | $cc$ |
| 1 607 | 3 214 | 1 607 |

Thus there would be

| | | |
|---|---|---|
| | 3 215 | homozygotes of $F_2$ |
| | 1 607 | homozygotes of $F_3$ |
| | 3 214 | heterozygotes of $F_3$ |
| Total | 8 036 | green plants. |

The theoretical calculation gives 8 036 green and 1 607 white plants in the $F_3$ generation, whereas actually 8 412 green and 1 234 white plants were obtained. This difference may be explained by the fact that an average number of grains was reckoned for each plant and also that only 22 plants, with a large number of tillers, were dealt with. The proportions between the numbers of green and white descendants of the six plants sown separately show quite clearly that etiolation is transmitted as a recessive character according to Mendel's law, thus confirming the results of NILSSON-EHLE, VESTERGAARD and MILES.

It is interesting to notice that in this case, in which the crossing was carried out in exact accordance with scientific rules, the characters were trans-

mitted in the same way as in a crossing between green plants and white plants in which green is dominant. Thus when abnormal hereditary characters have appeared it has been possible to trace back the combination of factors *Cc* as far as their association at the time of hybridisation, and even to examine pure lines to seek for the eventual presence of the factor *c*. In this investigation more than one half of the available seeds of two pure parent lines were sown (1 000 grains in each case) and it appeared that the factor *c* did not occur in these lines, because all the plants raised were normally green, whereas the heterozygotes *Cc* shoul have produced white descendants as well after self-fertilization. If one admits, with NILSSON-EHLE, that the cause of the appearance of white plants is a mutation in which a determinant chlorophyll factor has disappeared, this mutation, called a " mutation of loss ", must have occurred at the time of hybridisation ; for, on the one hand, the parents were pure, and on the other hand, the first appearance of the white plants in the generation $F_2$ and their definite mendelism proves that the first association of *C* with *c* occurred in the generation P, *i. e.* in the hybridisation itself.

As was shown at the beginning the crossing gave about 30 plants, of which 26 were used for continuing the investigation. These all had the same plant as mother and also the same male parent, as the pollen used for fertilization was all taken from a single plant. Only one of these 26 plants had any white descendants. The inevitable conclusion is that the supposed mutation had not affected the whole of the male or female parent, but only some of the gametes, possibly even one gamete only. It is obvious that of the 52 gametes (26 male, 26 female) which entered into combination in this cross only one, either male or female, posessed the factor *c*, a predisposition to the absence of chlorophyll.

As in this case the factor *c* appeared at the time of crossing the idea naturally suggests itself that the fact of crossing played a part in the formation of white descendants, and perhaps even caused the mutation. This hypothesis is favoured by the fact that up to the present white individuals have been chiefly noticed among cross pollinated plants. During the researches on etiolated plants the author of this paper has found about 1 000 white descendants in rye, 1 in 6-rowed barley, one in 2-rowed bent-eared barley, 1 in oats, none in erect-eared barley and in wheat.

With a view to solving these problems it is intended, during the next few years, to grow both singly and in mass the pure lines from which the white plants were descended.

II. *Rye.* — In the autumn of 1915, 44 out of 104 lines (nearly 50 per cent) of Saaleroggen (rye from the Halle district on Saale) divided up into green plants and white plants. Nevertheless, in each line the proportion of white plants never exceeded 10 per cent and on the average did not even reach 5 per cent. The reason of this was that in rye after the crossing $C \times c$ in the generation $F_1$ no self fertilization occurs such as is necessary to produce the mendelian numbers, but, on the contrary, the heterozygous ovules *Cc* are fertilised by foreign homozygous (*CC*) or heterozygous (*Cc*) pollen : it is only in the latter case that white plants can appear in the $F_2$

generation. If all the ovules were fertilized by heterozygous pollen 25 per cent of white individuals could be produced. As this probability is excluded this 25 per cent represents the maximum theoretical limit of probability, and the actual number of white descendants appearing in the $F_2$ generation of a single crossing is determined only by the frequency with which plants predisposed to lack of chlorophyll occur in the neighbourhood. This explains why the number of white plants appearing in a single line or rye is relatively so small, although such plants occur in a large number of lines.

It is evident that the appearance of white plants is of extraordinary frequency in the rye under discussion. On the other hand such plants were rarely seen in 30 other kinds of rye grown at the Experimental Station. Saaleroggen is a local variety peculiar to the environs of Halle and it hs been grown for a long time without the introduction of fresh blood. As it has been grown by in-breeding there is every reason to believe that this method of cultivation is the cause of the lack of chlorophyll. This hypothesis is rendered more probable by the fact that the appearance of white plants seems to increase steadily in spite of the dominance of the factor " presence of chlorophyll ".

As in the observations made by NILSSON-EHLE, the heterozygous plants of barley and rye which are the parents or even the sister-plants of the albinos in the Halle district are in no way different from the normal homozygous plants of the variety. The green chlorophyll is strongly dominant, but this dominance seems only to occur in indigenous cereals, as EMERSON has found in Maize some heterozygous plants of an intermediate type striped with green and white.

1273 – **Two New Seedling Hops of Commercial Promise.** — SALMON E. S., in *Journal of the Board of Agriculture*, Vol. XXIII, No. I, pp. 47-51. London, April 1916.

In 1906 the writer commenced to raise new varieties of hops from seed obtained by artificial and by natural cross-fertilisation, and at the present time the Experimental Hop-garden at Wye College contains nearly 4000 " hills " of seeding female hops and selected male hops. The commercial value of the most promising of the seedlings is now being tested.

In a preceding article (*Journal of the Board of Agriculture*, May 1915) attention was drawn to a new hop, the Foundling, which is resistant to the eelworm disease and shows other characters of commercial importance; in the present paper two other seedlings are described which appear worthy of more extended trial by the hop-growers of this country.

The first of these new varieties was raised in 1906 by pollinating the variety White's Early with Early Bird. All the plants thus obtained showed a resemblance to White's Early in earliness, in the large, bold, rather open hops with thin petals, and in possessing the delicate " Golding " flavour. Two or three of the seedlings show promise commercially, but only one (No. 125), called Young Hopeful, has yet been tested sufficiently. The dry hops for several seasons have been favourably reported on by various experts. In 1910 and 1911 the hops contained 8.66 per cent of soft resins : in 1912 the percentage was 10.30. During the last three years cuts of this plant have

been sent to twelve localities in Kent and Surrey, and where the hop has become established favourable reports as to the growth have been received.

The second good hop, called Pickers Delight, is of unknown parentage; it was raised in 1908 from a seed collected in the Experimental Hop-garden at Wye College from a certain hop which showed the following characters: — Early to mid-season, growth very vigorous, very fruitful, hop very large, oval, nice shape, dense, often with a tinge of red on the petals, flavour pronounced good in most cases, sometimes excellent. The seedling hop is now being grown experimentally in 12 places in Kent and in 2 localities in Surrey and Sussex.

1274 – **The Value of Immature Potato Tubers as Seed.** — HUTCHINSON H. P., in *Journal of the Board of Agriculture*, Vol. XXIII, No. 6, pp. 529-539. London, September, 1916. STARCH CROPS

Many practical potato growers believe that tubers lifted in an immature or unripe condition give better yields than fully ripened tubers. This has been confirmed by experiments carried out at Garforth (Yorkshire) in 1905 and 1906 with mid and late-season varieties, at Wye College (Kent) in 1912 and 1913, and at the Midland Agricultural College in 1914 and 1915.

At the Midland Agricultural College in 1914 the variety Factor yielded as follows:

| | tons | cwt | lbs |
|---|---|---|---|
| Crop raised from ripe tubers. . . . . | 12 | 4 | 72 |
| Crop raised from immature tubers . . | 13 | 9 | 80 |

In 1915 the variety King Edward yielded:

| | | | |
|---|---|---|---|
| Crop raised from ripe tubers. . . . . | 6 | 1 | 62 |
| Crop raised from immature tubers . . | 12 | 19 | 42 |

The use of immature tubers as seed gives plants that are earlier, more vigorous, and less attacked by diseases and pests, while the crops are earlier and heavier.

The superiority of immature seed may be due to the following causes:

1) *Method of selection.* — In usual farming practice the tubers retained for planting purposes are of medium and smaller sizes, the larger tubers being sold. For planting with immature seed the larger tubers are selected, which are mainly derived from the most productive plants, so that the resulting tendency is to increase, or at least to maintain, previous productivity.

1) *The structure of the tuber coats.* — The cortex of immature tubers is thinner, which facilitates evaporation, imbibition, respiration etc and consequently aids germination.

3) *The amount and condition of the reserve food material.*

4) *The length and time of storage.* — The immature tubers are given several weeks longer storage, so that a larger proportion of the starch is transformed into compounds that are more easily assimilated by the young plant.

1275 – **Potato Trials in Guernsey.** — McFie J. B., in *The Gardener's Chronicle*, Vol. LX, No. 1555, pp. 180-181; London, October 14, 1916.

During the autumn of 1915 potato trials of some of the leading early varieties were carried out in Guernesy at the Brookdale Nurseries of Messrs. W. Manger and Sons, with the purpose of ascertaining which were the more suitable for their district taking into account the cropping and cooking qualities. Land to the extent of one acre, on which bulbs had been grown for about ten years was set apart for the purpose and prepared as follows: Seaweed at the rate of 30 tons per acre was spread on the surface and allowed to lie for a month or so, after which it was dug in about 5 inches deep. That was in the fall of 1915. In January of this year the ground received a further dressing, but this time of stable manure at the rate of 20 tons per acre. This was ploughed in about 9 inches deep. At the end of February and early in March the trials were planted beginning with the first earlies. Two feet were allowed between the drills and about 16 inches between the sets. A liberal dressing of Peruvian guano was sown in the drills during the planting (½ ton to the acre), and as soon as the tops were clearly visible they were forked between and earthed up a fortnight later. At the end of May, when the plants were growing strongly, they were sprayed with Bordeaux mixture, and again after a fortnight. The result was that practically no blight (*Phytophthora infestans*) was seen on the early varieties. During the early part of July, the disease was noticed in the second early and main crop varieties. Fortunately, however, this only affected the haulm, as at digging time hardly 1 per cent of the tubers were affected, a result which is no doubt entirely due to the spraying with Bordeaux mixture.

The following are the average crops, per acre, obtained:

| | | Tons | Cwts |
|---|---|---|---|
| First Earlies: | Midlothian Early | 12 | 10 |
| | Sharpe's Express | 12 | 8 |
| | Witch Hill | 10 | 18 |
| | Dunottar Castle | 10 | 14 |
| Second Earlies: | Great Scot | 24 | 18 |
| | Edinburgh Castle | 19 | 12 |
| | Dobbie's Favourite | 19 | 12 |
| | Stirling Castle | 15 | 10 |
| | Arran Chief | 16 | 19 |
| | Suttons Flourball | 14 | 17 |
| | White City | 10 | 8 |

1276 – **Experiments on the Manuring of Potatoes in Germany.** — Weber P. and Kleberger, in *Journal für Landwirtschaft*, Vol. 64, Part 3, pp. 181-199. Berlin, October 19, 1916.

Experiments have been made to determine how the yields of potatoes and starch are affected on sandy soils, loams and clays, when a manure containing phosphate and potash is supplemented by one or other of the following nitrogenous fertilisers: ammonium sulphate, calcium cyanamide, ammonium nitrate, purin.

In each experiment the manure applied per acre consisted of 3 ½ cwt. basic slag and 1 ½ cwt. potash salts (40 per cent), together with the nitro-

genous manure, either 1 ½ cwt. ammonium sulphate, 1 ½ cwt. cyanamide, ¾ cwt. ammonium nitrate or 281.6 gallons purin. The question of the effect of the nitrogen in purin and the commercial manures was approached after the nitrogen, potash and phosphate requirements of the soils had been determined. All the manures, except ammonium nitrate, were spread about a fortnight before seeding. The purin, which contained 3 to 4 parts per thousand of nitrogen, was distributed on two occasions, a fortnight and a week before planting. Half of the ammonium nitrate was applied as a top dressing, when the young plants appeared, and the other half about a fortnight later.

The soils used for the experiments were:

1) a very light sandy loam derived from the disintegration of banded sandstone, deficient in chalk and potash.

2) a stony diluvial soil, rather impervious, deficient in chalk and potash.

3) two siliceous loams of tertiary age containing plenty of chalk and a sufficiency of potash.

4) two clay soils derived from disintegrated basalt, containing a fair amount of chalk and plenty of potash.

The farms on which the experiments were carried out are worked under the system of intensive cultivation.

The land was prepared about the middle of April, the manures were applied at the end of the month and Industry potatoes were planted in rows between May 7 and 11. The development of the crops was normal, but those on the sandy land suffered from drought in the summer of 1915.

The results of the experiments were set out in tables from which the following conclusions have been drawn, showing the great importance of the use of manure:

1) Nitrogen is usually the factor which determines the yield of potatoes, particularly on good clay soils, but on sandy soils mineral manures (potash, phosphate) seem to be more important in this respect.

2) A maximum yield cannot be obtained on strong land without potash and phosphate manuring, even with heavy applications of nitrogen.

3) Of the nitrogenous manures tested ammonium sulphate always gave the best results on all types of soil, though cyanamide and ammonium nitrate were not far behind.

4) Purin gave such satisfactory results that it can be strongly recommended as a manure for potatoes.

5) The highest starch yields were obtained with potash and phosphates without the addition of nitrogen. Purin only caused a small reduction in the proportion of starch, while the other nitrogenous manures brought about a much greater decrease. The potato seemed to be very sensitive to the use of cyanamide and ammonium nitrate, as these manures encouraged rotting. Potash manuring always caused an increase in the proportion of starch.

6) The quantity of nitrogen applied in the manure is not always reflected by the crop yield. For example, ammonium sulphate, of which

only the 90 per cent was used on clay land, gave better results than ammonium nitrate was not completely assimilated by the plant or that it was utilised for stem and leaf production to a greater extent than the ammonium sulphate.

7) The experiments show that the nature of the nitrogenous manure has a very great influence upon the utilisation of potash and phosphoric acid. These two substances are used to the greatest advantage in the presence of ammonium sulphate, ammonium nitrate and cyanamide, in the order named.

8) Purin is very satisfactory, especially on clay soils, so that it deserves special attention on this account.

FORAGE CROPS, MEADOWS AND PASTURES

1277 – **Pasture Problems: Indigenous Plants in Relation to Habitat and Sown Species.** — STAPLEDON R. G. and JENKIN T. J., in *Journal of Agricultural Science*, Vol. VIII, Part I, pp. 26-64. Cambridge, September 1916.

The aims of the present paper are *a*) to trace the relationship that exists between the several indigenous plants that contribute to the herbage of different types of grassland:

*b*) to follow the progressive changes that occur on fields (down to grass for a varying number of years,) belonging to these types;

*c*) to follow the competitive interaction between sown and indigenous species;

*d*) to contrast the effect on the herbage of continual mowing and continual grazing.

Most of the data presented are derived from investigations in South and Mid Wales, but occasional examples are given from North Wales and the Cotswolds.

A distinction is drawn between natural and semi-natural types of grassland. Natural types are those which historical evidence suggests have never been extensively under the plough or manured and which, if broken or manured at a remote period, have completely reverted to type. Semi-natural types are those which have certainly, at one time or another' been under the plough and, at all events, manured during the rotation previous to reverting to grass. The semi-natural types may be further classified as *untended*, those which have been ploughed and probably manured 50 to 100 years ago, and *tended*, those which have been down to grass for 20 to 50 years.

Grassland plants may be divided into the following classes, which are applicable to all districts and to all types of grassland.

*a*) Primary indigenous species, which colonise natural grassland.

*b*) Secondary indigenous species, which come in without having been sown and which contribute largely to the herbage on semi-natural types of grassland.

*c*) Tertiary indigenous species, which come in by themselves on young leys but which disappear as the fields approach the semi-natural type.

*d*) Locally exotic species, which are indigenous to a district but

which do not naturally contribute to the flora of a well marked type of grassland.

*e*) Exotic species, which are not indigenous in a district.

The number of primary species on most types of grassland is not considerable. When a field long under arable cultivation is put down to grass the primary species are usually late to come in ; this is particularly true of *Bromus erectus, Molinia caerulea, Nardus stricta, Triodia decumbens* and *Festuca ovina* ; and if they come in early, they do not rapidly make their contribution to the herbage, *i.e.* they may fall below their minimum or exceed their maximum figures. Primary species which sometimes come in early are frequently met with as arable weeds, such as *Poa trivialis* and *Festuca rubra* at lower elevations and on the better soils, and *Agrostis vulgaris* on the poorer soils.

The various stages in the process of stabilisation of semi-natural grassland — through tended to untended and thence into natural types — may be summarised thus :

At 20-30 years, under the influence of periodic manuring and comparatively heavy grazing with cattle and sheep the secondary species (*Cynosurus cristatus, Trifolium repens, Plantago lanceolata* etc) are still abundantly represented ; the primary species (*Agrostis vulgaris, Festuca ovina* and the heath herbs) are, however, beginning to take a prominent place in the herbage.

At 50-100 years the primary species have gained considerably but do not yet stand in their normal relation to each other ; the secondary species are much reduced.

After 100 years the influence of the original disturbance and of manuring is now finally lost ; the grazing is generally by sheep only, the nett result being that the primary species have completely suppressed the secondary species.

The relation of primary and secondary species to their commercial and sown counterparts is as follows :

*a*) The commercial seed does not appreciably hasten the appearance nor add to the contribution of the desired plant. This is true of sowing *Festuca ovina* or other fine leaved fescues and is, in many cases, equally true of *Anthoxanthum odoratum* ; the inclusion of such seeds in mixtures is not justified economically. It is far from certain that the commercial *Trifolium repens* seed produces a lasting plant, as on many soils phosphatic manure is all that is necessary to hasten the appearance of the indigenous plant.

*b*) The commercial seed may produce a great bulk of the required plant in the early years of a ley (far more than the indigenous species would attain to naturally at any time). The behaviour of *Lolium perenne* sown on good soils is an excellent example. Under these circumstances good seedings of the commercial seed is economically justified, especially if hay is required in the early years of the ley.

*c*) The commercial seed may hasten the appearance of the desired plant and cause it to bulk somewhat more largely in the early years of a

ley than it otherwise would, but there is always some risk of the sown plant interfering with the development of the definitely lasting indigenous species. Good examples are *Poa trivialis* and *Cynosurus cristatus*; a knowledge of general conditions would often suggest excluding the former from a mixture, while the amount of seed of either that might be advantageously used needs further local investigation.

The desirability or otherwise of sowing the commercial seed of locally exotic species, or of but slightly secondary species, is easily determined. The commercial seeds lead to good results or they do not. If the commercial seed produces plants that are found to succeed it is however nearly always necessary to sow liberally; this is particularly true of *Dactylis glomerata, Festuca elatior, Cichorium Intybus, Phleum pratense* and *Arrhenatherum avenaceum.*

It is difficult to account for the spontaneous appearance of primary and secondary species (and of some locally exotic species, as *Holcus lanatus, Bromus mollis* et spp. and *Phleum pratense,*) on land long under the rotation when put down to grass, especially when more or less isolated from natural or semi-natural grasslands. The available evidence, however, suggests that:

*a*) Many species remain on the land as arable weeds on the soils that suit them, as *Poa trivialis, Agrostis vulgaris, Festuca rubra* and *Ranunculus repens.*

*b*) The seeds of many species are probably introduced by the wind, as *Holcus lanatus, Anthoxanthum odoratum.*

*c*) The seeds of many species are certainly introduced as impurities (useful and otherwise) in the sown seeds, as for example *Phleum pratense* (in *Trifolium hybridum*), *Plantago lanceolata* (in *Trifolium* spp.) *Holcus lanatus*, and *Bromus mollis* et spp. (in *Lolium* spp.)

*d*) There seems little doubt that the seeds of a great number of species are capable of lying dormant for long periods in the soil; in particular this may be true of *Trifolium repens* and *T. minus, Cynosurus cristatus, Poa* spp, *Phleum pratense* and *Festuca ovina.*

The data brought forward in this paper would seem further to justify the following broad generalisations with regard to both experimental work on grassland and the whole problem and economics of putting land down to grass.

1) Experimental plots dealing with seed mixtures should be large (at least half an acre) and square in order to give a considerable central zone. The hay should be cut as early as possible to avoid seeding and the carriage of seed from plot to plot. No series of plots can, henceforward, be regarded as complete without a control plot, which control should not be seeded (with grasses and clovers) but left to the indigenous species to colonise. The control plot should, of course, be subjected to the same cultivations, receive the same manures, and grow the same nurse as the seeded plots.

2) Undoubtedly when putting land down to long duration grass as much or more can be done by making the habitat as suitable as possible

to the desirable indigenous species as by including their commercial counterparts in the mixture. The commercial permanent grasses are far more valuable for say 4-6 year leys than they are for permanent grass as such.

*Poa* spp. and *Cynosurus cristatus* to some extent tide a field over its critical third and fourth years in proportion to the sowing, but in the later years the amount of the original seeding becomes of small significance compared to the influence of proper manuring and general management. Speaking generally pasture conditions favour the valuable indigenous species better than meadow conditions. On poor soils especially we are accumulating evidence to show that rape (folded on the land) is a much better nurse than oats or barley (removed from the field).

3) Our indigenous herbage plants offer a promising field for study. Nor should modern investigators confine their attention to grasses and clovers only, with the exception of but a few miscellaneous herbs. The authors of the present paper have been struck in the course of their work by the extent to which such plants as *Juncus squarrosus*, *J. Gerardi*, *J. articulatus*, *Bellis perennis*, and *Statice maritima*, are relished by stock.

It is, however, most desiderable to study the locally successful varieties of *Festuca ovina*, *Festuca rubra*, (with the other fine leaved fescues), *Poa trivialis*, *Poa pratensis*, *Lolium perenne*, and *Cynosurus cristatus*, with a view to estimating their relationship to the commercial counterparts and if necessary with a view to establishing local supplies of the indigenous seed.

The plants occuring in the district studied are given in classified lists of primary, secondary, locally secondary, locally exotic and exotic species.

A bibliography of 20 references is appended.

1278 – **Comparative Yields of Hay from Several Varieties and Strains of Alfalfa in South Dakota, U. S. A.** — HUME A. N. and CHAMPLIN M., in *South Dakota State College of Agriculture and Mechanic Arts, Agricultural Experiment Station, Bulletin* No. 163, pp. 282-243. Brookings, South Dakota, January 1916.

Various kinds of alfalfa were tested at the Stations at Brookings, Highmore, Eureka and Cottonwood from 1913 to 1915.

The following results were obtained from strains of *Medicago sativa*, tested on plots of one tenth acre in extent.

| Strain | South Dakota number | Serial plant introduction number | Average yield per acre |
|---|---|---|---|
| | | | lbs. |
| Vale | 22 | — | 2 565 |
| Grimm | 162 | 29 988 | 2 532 |
| Turkestan | 240 | 981 | 2 527 |

The yields given above are those of the first cutting only, as the second cutting was made after the alfalfa had seeded. The differences are too small to allow definite conclusions to be drawn as to the relative value of the three strains. Sometimes, however, Turkestan seed is unfavourably regarded on some of the Eastern markets, while the others meet with approval.

Strains of *Medicago falcata* were tested at Brooking from 1910-1915, with the results shown in the following table :

| Strain | South Dakota number | Serial plant introduction number | Average yield per acre |
|---|---|---|---|
| | | | lbs. |
| Obb . . . . . | 42 | 20 452 | 2 865 |
| Kharkow . . . . . | 47 | 20 717 | 2 046 |

These yields of hay were obtained from one cutting ; usually *Medicago falcata* can only be cut once in a season, and consequently it does not give such good crops as strains of *Medicago sativa*, which always produce a second and even a third cutting.

The paper under discussion gives a very detailed history of the introduction of different kinds of alfalfa into South Dakota, with a full description of the various strains of *M. sativa* and *M. falcata*. Numerous strains of alfalfa seem to be natural hybrids between the two species, and on this assumption they have been named *Medicago media*. The strains of *M. media*, *M. ruthenica* and *M. platycarpa* which have been introduced into South Dakota are described.

1279 – **Silage from Green Forage in Java.** — SHIMMEL E., in *Teysmannia*, Year XXVI, No. II. Batavia, 1915.

In many parts of Java there is a dearth of green forage during the dry season (east monsoon) and consequently the feeding of the livestock is often very defective.

Attempts have been made in the Buitenzorg Gardens to make silage from a Bengal grass (*Panicum maximum*) which is often grown in Java. The silos consisted of holes dug in well drained soil, and were 3 feet deep and 6 feet across. Each was filled with 2860 lbs. fresh grass in full flower, about three months old, care being taken to slightly raise the centre of the heap so that the rain should run off quickly. When the silos were three parts full they were covered with large stones and then with a layer of earth 16 inches thick to prevent any penetration of air. They were opened three months later and then contained acid silage of high quality which was much appreciated by the animals.

It was found that 50 per cent of the fresh grass was converted into useful silage after making allowance for loss of water and for the grass

which was spoiled by contact with the sand at the sides of the silo, 20 to 30 per cent of the nutritive constituents of the fresh grass were lost in the process of conversion into silage, except as regards fats and mineral substances. A mixture of equal parts of fresh forage and *Panicum maximum* silage is recommended for use in times of scarcity.

1280 – **The Cohune Palm *(Attalea Cohune)* and its Products** (1). — MORRIS C. D., in *La Hacienda*, pp. 376-379. Buffalo, N. Y., September 1916.

CROPS YIELDING OILS, DYES AND TANNINS

The fruit of this palm contains a kernel which yields about 40 per cent of an oil that is said to be superior to cocoanut oil. It has been extracted for several years and has been used in place of ordinary burning oil. As a matter of fact this palm oil is suitable for other more important commercial uses. The Cohune grows in the region between South Mexico and Columbia and attains its best development in British Honduras, Guatemala and the Honduras Republic. In the latter country the soil of the forests is rich, marly, and of excellent quality. The trees grow about 5 yards apart and the fruits form enormous bunches which sometimes weigh as much as 165 lbs. each. The average yield of one tree is 1 000 nuts per annum, though some specimens will produce twice as many. By means of ether rather more than 40 per cent of oil can be extracted from the kernel ; the cake contains 2.5 per cent of nitrogen and can be used as cattle food.

Cohune oil saponifies easily and furnishes an odourless soap which may prove to be useful in the manufacture of fine soap. The fibrous pericarp, which is about ¼ inch thick, also contains some fat. If factories are put up for the extraction of the oil from the kernels by means of solvents it might be worth while to extract the fats from the pericarps as well. When freed from fibre the fruit is 2-2 ½ inches long and about 1 ½ inches across. The shell is very hard and is about ¼ inch thick, while the kernel is as big as a large nutmeg.

In order to produce the oil on a large scale for export machines must be used to crack the stones. This is a very difficult problem to solve, as the machines must needs work with great force, with the result that the kernels are smashed as well as the shells.

This palm serves other useful purposes : houses are thatched with the leaves ; the leaf stalks are woven with osiers and cord into fences and mats ; the pith of the central stem can be used instead of cork for mounting insects ; cord and hammocks are made from the fibres of the young leaves. The sap makes a refreshing drink, which is not so much used now as formerly.

(1) See also *B.* 1913, No. 1038. (*Ed.*).

RUBBER, GUM AND RESIN PLANTS.

1281 – **Hevea in Java.** — I. VRIENS J. G. C., Planting and Thinning of Hevea, in *Mededeelingen van den Adviseur der A. V. R. O. S.* No. 4, pp. 45-49. — II. STET., The Fall of Young Leaves in Hevea. *Id.* pp. 59-60. Medan, 1916.

I. Various opinions are held as to the advantages of close planting of Hevea followed later by thinning out. The author puts forward the special advantage of this method in the upkeep of the plantations, and expresses his personal opinion that it is best to plant the trees 24 × 24 feet apart as a maximum and 19 × 18 feet as a minimum. The young plants should be very carefully selected from the nurseries.

The plantations must be kept well thinned in order that light can penetrate everywhere. Good drainage is essential and care must be taken that the water has free outlet. Pruning should be avoided and the plantations must be weeded every year.

II. The leaves of Hevea sometimes fall in the young stage. This defoliation always occurs after prolonged rains, and it is attributed to climatic causes, as no trace can be found of the presence of any cryptogamic disease.

1282 – **Some Experiments on the Coagulation of Hevea Latex without the Use of Acetic Acid.** — GERTER Dr. K. and SWART Dr. N. L. in *Mededeelingen van de Vereeniging Rubber Proefstation West-Java* No. 6, Bandoeng, 1916.

Thea author gives as result of his investigations on the coagulation of Hevea latex the following summary :

1. If latex with an addition of 0.3 per cent of sugar is allowed to stand overnight, coagulation occurs by lactic acid fermentation, putrefaction being inhibited.

2. The so called slow coagulation of latex by means of small quantities of acetic acid (0.3 gr. per liter) is also caused by lactic acid from bacterial growth.

3. In order to get complete coagulation by the sugar process the addition of 20 to 25 per cent of water to the undiluted latex may be recommended, this quantity being diminished according to the concentration of the latex received in the factory.

4. On a factory scale the following proportions have been used ;

175 L. lates, containing about 35 per cent of dry rubber.
50 L. of water.
400-450 gr. of sugar.

5 Under the above conditions the acidity of the serum after 18 hours has rather a constant value corresponding to 0.3 per cent of acetic acid.

6. The addition of serum of the former coagulation may sometimes be of use inhibiting putrefactive changes.

7. To prevent the formation of a coloured layer on the rubber it is advisable to pour water on its surface as soon as coagulation is setting in.

8. In laboratory experiments small quantities of bisulfite of soda had no disturbing influence upon the fermentation : on a large scale however the results hitherto have not been satisfactory.

9. The sugar process can only be used in preparing crêpe-rubber because of the porous state of the clot, gas bubbles being formed during the fermentation.

10. Other coagulants have been discussed, chiefly in view of the preparation of sheet-rubber.

11. Thereby attention was drawn upon the dangers involved by the use of coagulants such as sulfuric acid, *purub* and *aluin*.

12. The acidity of coconut water after fermentation did not exceed 0.45 per cent of acetic acid.

13. It was found that rubber prepared by the sugar process had the same viscosity index as a control sample made by means of acetic acid from the same batch of latex.

14. The mechanical properties were found to be identical.

1283 – **Studies in Indian Sugarcanes, No. 2.** — BARBER C. A. (*Government Sugarcane Expert, Madras*), in *Memoirs of the Department of Agriculture in India* ("Sugarcane Seedlings, including some Correlations between Morphological Characters and Sucrose in the Juice") *Botanical Series*, Vol. VIII, No. 3, pp. 103-198. Plates I-XXIX and numerous tables. Calcutta, July 1916. SUGAR CROPS

The present contribution to the study of sugarcane seedlings in India is divided into 4 sections. The first of these deals with the material available and contains an enumeration of the seedlings thus far raised, with notes as to the chief difficulties encountered and the means by which thes have been overcome. The second discusses the differences noted in the youthful characters of the seedlings before planting out and at maturity. The next section treats of the mode of analyses adopted and the variations in the juice of the seedlings as regard sucrose content, and the last summarises the correlations thus far studied between the characters of mature seedlings and the amount of sucrose in the juice.

The experiments were conducted at the Government Cane Breeding Station at Coimbatore in the Madras Presidency with a certain amount of preliminary work at the Botanical Garden attached to the local Agricultural College.

I. — ENUMERATION OF THE SEEDLINGS RAISED. — The failure of previous sporadic attempts at raising cane seedlings in India is probably due to the fact that fertilization was not property effected owing to the immature state of the pollen used. A detailed study of cane inflorescences has shown that the pollen is only fully developed where the anther locales have dehisced. It has been found that if the authers do not open when the flowers mature they remain closed permanently ; it is therefore clear that the first essential to raising canes from seed is that only flowers should be used in which the anthers dehisce.

The sugarcane commences to flower at Coimbatore in October and most of the seedlings are obtained during the following 2 months. They are plantd out in the field when about 6 months old and are ready for harvesting and analysis after another 12 or 18 months from sowing. In this way the seed lings obtained during any particular season are designated by the years of sowing and of chemical analyses.

TABLE I. — *Vitality of Sugarcane Seed.*

| Variety | Date of collection | Germination | February 1 | March 1 | April 1 | June 1 | July 1 | August 1 | Remarks |
|---|---|---|---|---|---|---|---|---|---|
| Madras N°2 . . | 9th Dec. 1914 | 500 | 500 | 300 | 200 | 100 | 20 | 0 | Equal quantities of pounded arrow were sown in the first five. Some seed remained capable germination for sown months. The seed of Saretha survived the longest and that of B 208 had least vitality. |
| Madras N° 6 . . | 15lhDec. 1914 | 500 | 500 | 300 | 200 | 100 | 20 | 0 | |
| Saretha. . . . . | 14thDec. 1914 | 500 | 500 | 500 | 300 | 200 | 40 | 0 | |
| Java . . . . . | 4th Jan. 1915 | 500 | 500 | 300 | 100 | 50 | 0 | 0 | |
| B. 208 . . . . . | 5th Jan. 1915 | 500 | 500 | 300 | Less than 100 | 12 | 5 | 0 | |
| Striped Mauritius | Do . . . . | 200 | 200 | 100 | 50 | 12 | 0 | 0 | A less quantity of arrow sown. |

During the periods 1911-13, 1912,14, 1913-15, 1914-1916, several thousands of seedling were raised from seed derived from local varieties or from arrows collected from various parts of India. The data relating to these seedlings — parentage (whether selfed or crossed), percentage of open anthers, germination etc. — are collected, in a series of tables. In the present summary space only allows of attention being paid to points, of more general interest. For instance. in 1914, owing to the somewhat saline nature of the soil of the experimental plots and to the quality of the irrigation water, some interesting data were obtained as to the great variation in the capacity of different canes to resist saline soil and water, some growing strongly and rapidly while others die out completely.

The stody of the cause of arrowing in the cane has led to frujtful results, There are 2 cane-planting seasons in the neighbourhood of Coimbatore, one in February-March and one in July-August or even later. The former is in vogue on garden-land irrigated by wells and the latter on wet lands under tanks. From a special study of each field from which arrows were obtained in the neighbourhood it soon became evident that canes planted in February-March do not usually flower while those planted at any time between Aug.-Nov. do so in the following Oct.-Nov. if allowed to remain in the ground. In the wet land generally the canes are more likely to flower and this has found to be the case even when they are planted as early as April-May. The result of an experimental arrowing plot under these latter conditions was eminently satisfactory. Among others, some 12 North India canes bore arrows, some for the first time on record. Unfortunately, in most of these the stamens remained obstinately closed but it is hoped to overcome this drawback by crossing a hardly North Indian indigenous cane with a richer exotic one provided they can be induced to flower simultaneously.

During the last period, 1914-1916, experiments were carried out on the

vitality of cane seed. The results, as shown in the appended table I are interesting as it is evident that, with proper care, cane seed retains its vitality for a condiderable period.

II. — Variation in Morphological Characters. — Under this heading are considered variations in vigour and size, general habit, erectness of young shoots, tillering, width and colour of leaves, colour and thickness of canes. Between some of these characters a certain amount of correlation is observed which, though not definitely settled, at least gives the impression that further study will show that certain infantile characters of the seed lings will be found to be related. If this can be proved, a great step in advance will be made as all present indications point to the fact that any classification of the cultivated sugarcanes must be based on the accumulation of a number of often very minute morphological characters, which, taken together, give the plant an indefinable but real mode of habit. With regard to vigour and size the seedlings of any batch though raised under identical conditions differ greatly in size and vigour. In many cases it has been noted that seedlings standing out from the rest because of their great growth, have a comparatively low sucrose percentage in the juice. Excessive vigour in a seedling, otherwise than a cross, is therefore not altogether a desirable character.

III. — Variation in the Sucrose Percentage in the Juice. — In addition to the usual " bulk " analyses of the juice at harvest time, a series of preliminary (" petty ") analyses were made before that date as the seedling of different parentage vary very considerably in their order of ripening and the petty analyses give an idea as to the order in which the plots should be cut for final analysis.

Later on, as the bulk analysis at crop time was not considered a sufficiently safe guide, it was decided to select from the series of analyses of any seedling, that containing the highest reading of sucrose. In doing this, however, due regard was paid to the percentage of glucose and the botanical description made at crop time.

The accompanying table II giving details of the amount of sucrose in the juice of parents and seedlings shows considerable variations in the sucrose content of seedlings of the same parentage. There is also a definite relation between parent and offspring in this respect, the better parents producing the better seedlings. The analyses of the special crosses also show that the sucrose in the seedlings approximates to the average of the two parents. In other cases the average sucrose of the seedlings is generally lower than that of the parents but this may be due to the fact that it was not always possible to analyse a seedling at its optimum.

Table III shows the effect of different soil and environmental conditions on the quality of the juice of seedlings. It will be seen that the seedlings respond readily to changes in soil and water.

The question as to the permanence of the juice characters of cane seedlings when propagated as sets has been studied but the data are as yet insufficient for definite conclusions to be drawn. Both the period of the year at which canes are cropped and the nature of the weather appear to influence

TABLE II. — *Comparison of sucrose in the juice in parents and seedlings*, 1912-14.

| | Parents | | | | Seedlings | | | |
|---|---|---|---|---|---|---|---|---|
| | Number of analyses | Locality | Range of sucrose % | Average sucrose % | Number of seedlings analysed | Locality | Range of sucrose % | Average sucrose % |
| Chittan | 5 | Cane Breeding Station | 15–18 | 16.67 | 500 | Cane Breeding Station | 8–21 | 14.7 |
| Karun | 3 | do. | 15–18 | 16.02 | 345 | do. | 10–20 | 14.7 |
| Kaludai Boothan | 4 | do. | 14–20 | 16.78 | 60 | do. | 10–17 | 13.8 |
| Saretha | 5 | Aligarth Farm 1913 | 13–17 | 14.59 | 51 | do. | 1–18 | 14.6 |
| | 15 | Cane Breeding Station | 11–17 | 13.83 | | | | |
| | 4 | Wet Lands Coimbatore Central Farm | 18–19 | 18.91 | | | | |
| Cheni | 12 | Cane Breeding Station | 11–14 | 12.67 | 19 | Botanic Garden Coimbatore 1913 | 9–15 | 12.2 |
| | 5 | Wet Lands Coimbatore Central Farm | 18 | 17.67 | 16 | Cane Breeding Station 1914 | 13–17 | 15.2 |
| | 10 | Mysore | 10–19 | 17.01 | | | | |
| Poovan | 5 | Cane Breeding Station | 13–17 | 14.61 | 17 | do. | 12–20 | 15.0 |
| Naanal | 12 | do. | 9–16 | 12.36 | 180 | do. | 5–17 | 10.5 |
| | 3 | Wet Lands Coimbatore Central Farm | 15–17 | 16.37 | | | | |
| Chin. | 9 | Cane Breeding Station | 12–16 | 13.81 | 18 | do. | 6–12 | 9.0 |
| | 7 | Wet Lands Coimbatore Central Farm | 16–18 | 17.30 | | | | |
| × *Saccharum spontaneum* | 7 | North India | 14–15 | 14.78 | | | | |
| | — | Cane Breeding Station | 3–5 | 4.00 | | | | |
| Shakarchynia. | 5 | do. | 9–16 | 12.94 | 81 | do. | 6–13 | 9.8 |
| | 4 | Sabour Farm Taylor 1911 | 17 | 16.94 | | | | |
| × *Saccharum spontaneum* | — | Cane Breeding Station | 3–5 | 4.00 | | | | |

TABLE III. — *Comparison of the price of seedlings grown under different conditions* (all bulk analyses).

| Seedling and its parentage | Garden Land at Coimbatore (well irrigated) | | | | | | | | Wet land in Central Farm Coimbatore tank irrigated | | Adhartal Farm Jatbulpore | |
|---|---|---|---|---|---|---|---|---|---|---|---|---|
| | Botanic Garden 1913 [1] | | Cane Breeding Station A 1914 | | Cane Breeding Station B 1914 | | Cane Breeding Station B 1913 | | 1915 | | 1914-1915 | |
| | Sucrose | Glucose | Sucrose | Glucose | Sucrose | Glucose | Sucrose | Glucose | Sucrose | Glucose | Sucrose | Glucose |
| Madras N° 2 (Kaludai Boothan) | 11.55 % | 1.53 % | 10.24 % | 0.71 % | 13.18 % | 0.52 % | 12.21 % | 1.11 % | 14.58 % | 0.67 % | 15.21 % | 1.24 % |
| Madras N° 6 (Poovan) | 11.88 | 1.45 | 7.95 | 1.32 | 9.60 | 0.94 | 9.34 | 1.43 | 13.83 | 0.48 | 13.04 | 1.60 |
| Madras N° 11 (Poovan) | 12.40 | 0.92 | Failed | | 13.64 | 0.65 | 16.09 | 1.10 | 17.26 | 1.00 | — | — |
| Madras N° 19 (Cheni) | 11.43 | 0.22 | 12.89 | 0.86 | 12.64 | 0.65 | 13.26 | 0.48 | 16.75 | 0.10 | 12.74 | 1.12 |
| Madras N° 21 (Cheni) | 12.36 | 0.16 | Failed | | 12.50 | 0.17 | 15.07 | 0.52 | 18.20 | 0.30 | 14.49 | 1.02 |
| Madras N° 25 (Cheni) | 14.68 | 0.10 | 11.86 | 0.51 | 12.56 | 0.56 | 13.96 | 0.81 | 15.72 | 0.33 | 14.63 | 0.90 |
| Madras N° 29 (Cheni) | 15.33 | 0.10 | 9.79 | 0.38 | 13.61 | 0.30 | 15.55 | 0.17 | 17.32 | 0.10 | — | — |
| Madras N° 45 (Cheni) | 10.05 | 0.17 | 10.83 | 0.61 | 15.81 | 0.65 | 11.74 * | 0.67 | 17.78 | 0.29 | 14.71 | 1.02 |
| *Average* | 12.31 % | 0.58 % | 10.59 % | 0.73 % | 12.95 % | 0.55 % | 13.40 % | 0.79 % | 16.43 % | 0.41 % | 13.13 % | 1.15 % |
| *Average of five grown at all places* | 11.94 % | 0.69 % | 10.75 % | 0.80 % | 12.76 % | 0.66 % | 12.10 % | 0.90 % | 15.73 % | 0.37 % | 14.07 % | 1.18 % |

[1] First year seedlings grown in large pits filled with good soil but irrigated with brackish water.
In 100,000 parts of water: — Total solids 239, injurious salts 165, sodium chloride 127.

A — Set plants grown first year from seedlings — in small pits filled with good soil, earth around saline; and irrigated at any rate at first with brackish water.
In 100,000 parts of water: — Total solids 342, injurious salts 249, sodium chloride 189.

B — Set plants grown first and second years from seedlings — in smaller pits filled with good soil; earth around slightly saline: irrigated with sweet water.
In 100,000 parts of water: — Total solids 91, injurious salts 53, sodium chloride 33.

* 14.82 in petty analyses, therefore probably over ripe.

considerably the character of the juice. Extraordinary variations have ben met with in a seedling in analysing the different canes in the clump. This has led to increased care in sampling and the discovery that certain varieties produce, in a given clump, two kinds of cane, differing both in certain morphological characters and in time of origin. In analysing the juice of canes this classification into early and late varieties cannot be ignored.

Taking the whole series of *selected* seedlings during the last 3 seasons, it is seen that the sucrose content in the seedlings has risen continuously as follows :

TABLE IV. — *Sucrose in the Juice of Selected Seedling.*

| | Number of seedlings grown | Over 17 % | Over 18 % | Over 19 % | Over 20 % | Over 21 % | Over 22 % | Over 23 % | Remarks |
|---|---|---|---|---|---|---|---|---|---|
| 1911-1913 (over 17 %) | 48 | 2 | — | — | — | — | — | — | All the seedlings were grow on |
| 1912-1914 (over 17 %) | 2,068 | 95 | 40 | 9 | 2 | — | — | — | The standard of selection, 17 % sucrose in the juice and over. |
| 1913-1915 (over 18 %) | 2,400 | 400 | 128 | 101 | 22 | 3 | 1 | 1 | The standard of selection, 18% sucrose in the juice and over, together with vigorous growth. |

IV. CORRELATION BETWEEN MORPHOLOGICAL CHARACTERS OF SEEDLINGS AND RICHNESS OR THIR JUICE. — The advantages that would accrue, as regards economy of time and trouble, trom the discovery of correlations between morphological characters of the young seedlings with richness in juice are obvious ; but there are special difficulties in the way and the principle has been adopted of trying first to find such correlations in mature canes at crop time and later to attempt to correlate infant and mature characters. The first step alone has been tried at present and the following correlations have been studied between mature characters and sucrose in the juice, the results being summarised in table V appended: — correlation between the amount of sucrose in the juice and various leaf and cane measurements (width, length and module, or length divided by width) and colour of cane, and correlations between leaf width and thickness of cane, tillering power and total weight of seedling.

TABLE V. — *Summary of Correlations.*

| | Chittan | Karun | Kaludai Boothan | Saretha | Cheni | Poovan | Naanal | | Shakarchynia × *Saccharum spontaneum* | Yellai × *Saccharum Narenga* | Notes |
|---|---|---|---|---|---|---|---|---|---|---|---|
| Number of seedlings dealt with | 477 | 323 | 54 | 46 | 18 | 13 | 65 | 71 | 65 | 80 | |
| Leaf width and sucrose | — | — | — | — | — | + (1) | + ? | + | o | + ? | (1) The numbers are so few that a single seedling has turned the scale. |
| Leaf length and sucrose | — | — | — | — | — | — | — | — | ... | o | |
| Leaf module and sucrose | + | + ? | + | + | + | o | — | — | ... | — | |
| Cane thickness and sucrose | o | — ? | — ? | — ? | — | + | + ? | + ? | + ? | + | |
| Cane length and sucrose | + (2) | + (2) | + ? (2) | + ? (2) | + | o | o ? | o ? (2) | + (2) | + (2) | (2) In 10 out of 16 cases where 4 classes were possible, the curve is quite distinct and peculiar. There is a steady rise in the first three classes, followed by a fall in the fourth. In 4 of the remaining 6, the third class, still has the highest sucrose (Cf. p. 150). |
| Cane module and sucrose | + | + | + ? | + ? | + | + | — (3) | — (3) | — (3) | + | (3) In Naanal and Shakarchynia × *Saccharum spontaneum*, the curves are similar, there being a rise from the first to the second class, followed by a fall from the second to the fourth (cf. p. 182). |
| Leaf width and thickness of stem | + | + | + | + | + | o | o | o | + ? | + | |
| Leaf width and total weight | + | + | + | + | + | + | + | o (1) | o (1) | + | (1) In Naanal and Shakarchynia × *Saccharum spontaneum*, the first and fourth classes are much the largest and the second and third considerably lower. (cf. p. 186). |
| Leaf width and tillering | — | — | o | + | — | + | ... | ... | — ? | — ? | |

STIMULANT, AROMATIC, NARCOTIC AND MEDICINAL PLANTS

1284 - **Coffee in Java.** — I. CRAMER P. J. S. *Coffea excelsa* in Java, in *Teysmannia*, Year XXVII, Nos. 4 and 5, pp. 211-223. Batavia, 1916. — II. KEUCHENIUS P. E. Notes on the Fertilization of *Coffea excelsa* in Java, in *Mededeelingen van het Besoekisch Proefstation*, No. 20. Surabaya, 1915.

I. *Coffea excelsa* was discovered in the Congo in 1904 by A. CHEVALIER, and it was introduced into Java through the State Agricultural Station, which received some seeds from the Colonial Garden at Nogent-sur Marne (France) It resembles *Coffea liberica*, from which it is distinguished by some secondary characters, especially by the smaller fruits. The berry has a soft watery pulp and a tender skin which is easily removed.

Various types of plants were raised from the first seeds introduced into Java and careful selection will be necessary to obtain a good stock for cultivation. During the extraordinary and prolonged droughts of the last few years *Coffea excelsa* has shown greater powers of resistance than other species of coffee.

Investigations on selection and on the best methods of cultivation are being carried out at the State Experimental Station.

II. Observations have been made on the different ways in which coffee is pollinated, as insects are almost entirely absent from the plantations. The relative positions of the stamens and pistil in the flower makes self-pollination very difficult. The pollen is easily shaken down on lower flowers, and it is also carried by the wind. It is therefore probable that self fertilization is very rare, and that most flowers are cross-fertilized.

1285 - **New Method of Detecting Adulteration in Tea.** — REHFOUS L., in *Bulletin de la Société botanique de Genève*, 2nd Series, Vol. VIII, Nos. 1, 2 and 3, pp. 24-28. Geneva, January, February and March, 1916.

The method is based on examination of the stomates, which are quite different in *Thea sinensis* from those in any of the other leaves used for adulteration. In the stomates of *Thea* the guard cells possess, on their inner surface, a very strongly marked layer of cutin which is prolonged into a beak or hook, and which is distinct from the beak which closes the ostiole.

Various kinds of tea have been examined. The stomates of Pecco tea are strongly cuticularised and possess the characteristic hooks. Ceylon tea is made from rather young leaves in which few of the stomates are fully developed; the cutin is less marked but the hooks are plainly visible although they are not very well defined. Both characters are also evident in Java tea, black tea (Souchong), Imperial, Congo, Russian tea from West Caucasus, Shangai green tea, Chinese yellow tea, green tea from South Mongolia. The same characters appear even in the sepals of *Thea sinensis*.

The only leaf used for adulteration that bears much resemblance to that of *Thea* is the *Camelia* leaf. A transverse section of one of the latter leaves shows that the stomates are quite different from those of *Thea*, for though they are strongly cuticularised the hooks are but very slightly developed.

1286 – **Investigations about the Dying out of Peppervines in the Dutch East Indies. — II Pepper-cultivation in Banka.** — RUTGERS A. A. L., in *Mededeelingen van het Laboratorium voor Plantenziekten* No 19, with illustrations. Batavia, 1916.

SUMMARY

I. Pepper was introduced in Banka about 40 years ago by Chinese from Riouw. Since 20 years the Bankanese (Malay natives in Banka) have been planting pepper, imitating the Chinese. The export from Banka amounted in 1913 to 2 ½ million *guilders* (over £ 200.000).

II. Pepper-cultivation in the Dutch East Indies has two distinct forms: on the one hand the cultivation, as practised since many centuries by the Malay in Sumatra, a form of agriculture based on exhausting the virgin soil and leaving it alone afterwards, on the other hand the cultivation, as practised by the Chinese a refined form of horticulture. The pepper cultivation in Banka is of the latter type.

III. The pepper-cultivation by the Chinese in Banka is marked by the following characteristics:

A. The pepper is grown at dead stakes without shadow.

B. By careful tillage, big plant holes, big burying-trenches and the use of first rate cuttings for planting vines are grown with an extensive and vigorous root system.

C. The pepper vines continue producing 20 or even 30 years as a result of careful cultivation and abundant manuring with "burnt earth", oil-cakes, cattle manure, fish manure etc.

D. The average production of each vine amounts to 3 kattie (= 4 lbs.) white pepper a year.

IV. The pepper cultivation by the Bankanese is a cheap imitation of the cultivation by the Chinese. Tillage, burying of the young vines and manuring are usually neglected. The vines are dying out within 9 years; the production of each vine is less than 1 kattie (= 1.3 lbs.) white pepper a year.

V. The following diseases and pests have been found in Banka:

A. Prematurely dying out as a result of planting in unsuitable soil.

B. Prematurely dying out as a result of insufficient care.

C. The leaves are eaten by a beetle (Holotrichia spec.)

D. The stems are eaten by termites.

E. The fruits are damaged by a small weevil, which eats small holes in the unripe seed.

F. On the leaves lice have been found.

G. Larvae have been found boring in the branches.

H. A cobweb fungus has been found on the leaves.

VI. The peppervines of the Bankanese show a marked difference from those of the Chinese: the last-named ones produce 4 lbs. white pepper a year during 20 years, the first-named ones three times less during one third of that time.

There is no other reason for this difference than the careful cultivation

by the Chinese and the neglecting of several necessary measures by the Bankanese. Which of the measures of the Chinese is the most important cannot be stated theoretically. Only experiments especially arranged for this purpose can settle this point.

1287 - **Notes on the Extraction of Citronella Oil.** — JONG A. W. K., in *Teysmannia*, Year XXVII, Nos. 4 and 5, pp. 246-252. Batavia, 1916.

Experiments have been made which show that the drying of citronella leaves (*Andropogon Nardus*) before distillation gives good results. Drying in the sun must be avoided, as this causes a rather heavy loss of essential oil.

Leaves that have been cut into pieces from 3 to 5 cm. square are more easily extracted than entire leaves. In the process of distillation care must be taken not to use any un-tinned metal tubes, as lead and copper form sulphates which discolour the oil.

1288 - **Tobacco Growing in the Illyrian Region.** — BALDACCI A., in *Ministerio delle Finanze, Direzione generale delle Privative, Bollettino tecnico della Coltivazione dei Tabacchi pubblicato per cura del R. Istituto Sperimentale in Scafati (Salerno)*, Year XV, Nos. 1 and 2, pp. 3-28. Scafati, January-February and March-April 1916.

*Dalmatia.* — Tobacco growing has been carried on in the Illyrian region for some centuries, and after the annexion of Dalmatia to Austria it became a monopoly. The Austrian Government then experimented with Herzegovinian tobacco and obtained good results by selection. Afterwards a long series of investigations were made with Macedonian tobacco and later still with American types. In 1863 Trebinyan tobacco was acknowledged as the best, and the other types were gradually given up.

When cigarette smoking came into fashion experiments were begun (1884) to improve the cigarette tobacco. These trials were carried on in Southern Dalmatia, as this was the only country in Austria-Hungary which produced this type of tobacco. Herzegovinian (Trebesat and Megiugorge) and Turkish (Giubek-Yakà, Kir-Yakà, Porsician, etc.) types were tested; Sumatra types were also tried, but were quickly abandoned as they gave such poor results. During the next twenty years the Dalmatian hybrids deteriorated more and more rapidly on account of imperfect selection, so fresh improvements were made. The best results were obtained by crossing Macedonian and Herzegovinian tobaccos. This method however, brought two difficulties in its train:

1) A great lack of uniformity in the crops was caused by the intercrossing which occurred owing to the presence of so many different varieties in the country.

2) The climatic and soil conditions caused the plants to revert to the wild type.

The Government was thus compelled to attempt fresh improvements:

1) To raise good hybrids adapted to the climate and soil of the different localities;

2) To fix and acclimatize the hybrids;

3) To obtain uniformity of crop by means of a suitable choice of seed ;

4) To establish government institutes for the production and control of tobacco seed.

In 1904 experiments were begun at Imoski and artificial crosses were made between Herzegovinian types (Stolatz and Drinovtzi) and Macedonian tobaccos (Kir and Giubek), the first crop from original seed being used for parents. The following crosses were made :

| | | | |
|---|---|---|---|
| Drinovtzi × Giubek | | Giubek × Drinovtzi | |
| Drinovtzi × Giubek | | Giubek × Drinovtzi | |
| Drinovtzi × Kir | | Giubek × Stolatz | |
| Stolatz × Giubek | | Kir × Drinovtzi | |
| Stolatz × Kir | | Kir × Stolatz. | |

The resulting hybrids were grown in 1905, and the descendants of the cross between Drinovtzi and Kir were much better than their parents. These hybrids were again crossed with one of the parents, thus :

| | |
|---|---|
| Drinovtzi × Giubek$^2$ | Stolatz × Giubek$^2$ |
| Drinovtzi × Kir$^2$ | Stolatz × Kir$^2$ |

After 1909 the trials were more and more improved by the use of ANGELONI's method. It had been proved that the distance between the plants has a very great influence on their character and qualities, so that the more the distance between the rows and between the plants in the rows was reduced the more closely did the hybrids in the plantations approach the Macedonian type in character.

After 1908 the American method of race improvement by artificial self-fertilization was also practised on Giubek.

The chief facts established by the Imoski and Sinj trials are as follows :

When Herzegovinian tobacco is crossed with a Macedonian type the hybrids in the first two generations almost equal the taller parent in height, but in the later generations the height decreases, at first rapidly, then more and more slowly ; the number of leaves behaves in the same way as the height. The maximum length and breadth of the leaves, after the first cross, rapidly and constantly decrease, and may throw back to that of the smaller of the parents ; the ratio, length : breadth, of the leaves increases from the first and approaches, but never quite equals, the ratio of the Macedonian parent.

When a Macedonian tobacco is crossed with a Herzegovinian type the number of the leaves and the height of the hybrids decrease steadily after the first generation ; the length and breadth of the leaves increase normally ; the ratio, length : breadth, decreases from the beginning and approaches, but never quite equals, that of the Herzegovinian parent.

Similar regular gradations can be proved with regard to length of internodes, number of flowers, the arrangement of the inflorescence, size of angles of insertion and the strength of the leaf venation.

In a series of hybrids the nicotine content increases with the Macedonian element and decreases with the increase of the Herzegovinian element ; the first crosses behave in different ways according to the particular combination of parents, so that no general rule can be laid down.

*Albania.* — Tobacco can be grown in all the regions of the lower plains (Scutari basin, Musakia plain, Diakova and Prisrend basin, plains of the great Albanian lakes, valleys of Argyro-Kastro, Janina and Lapsista) but the crop is of little importance in the country. While Albania might have been a great tobacco market she occupies, in regard to this crop, the lowest place among the provinces which were formerly included in Turkey in Europe : her production rarely covers her consumption.

Tobacco growing was taken over by the Turkish Government in 1878, at the time when the vilayets of Epire and Monastir and the Durazzo Sanjak (vilayet of Scutari) were under Turkish rule.

The Albanian tobacco now closely resembles the Montenegran type in character ; it was derived from Herzegovinian types by the old method of crossing. If the plants are grown very far apart the leaves sometimes develop enormously with very pronounced ribs ; in spite of this the texture is usually rather fine for such a large leaf. The dominant colour is generally light maroon, more rarely yellow ; the upper leaves ripen with difficulty, because the plants lose their flowers too soon. Even the best samples, such as those from the Scutari province, are too strong for cigarette tobacco and have little aroma. Possibly the lack of flavour may be due to defective methods of preparation, but this can be remedied by suitable mixing.

The tobacco seeds are sown in February and transplanting begins in April ; one to three weedings are given, one being the most usual number. Harvesting starts in August, and the leaves are threaded on strings, which are taken under cover as soon as damp weather sets in. No trouble is taken to select uniform leaves, and the strings are made up of all qualities and colours. After harvesting, the leaves are sold to manufacturers who turn them into fine pipe and cigarette tobaccos. All the work is carried out by hand labour.

Considering the economic condition of Albania it is doubtless advisable to suggest the continued growing of the yellow Herzegovinian types, which are suited to the soil and which have been improved by crooss breeding carried out by the Austrian Government in Dalmatia and by the Italian Government in the Lecce province. Tobaccos of this type are easily acclimatized in warm and dry soils, they do not need stopping nor special cultivation, they can be dried in the open air in the sun (they do not even need special places for treatment) and they need little hand labour in manipulation for market.

The growing of Giant Herzegovina might be tried in the Albanian region. The Scafati station obtained the original seeds from Dalmatia, and by careful selection very large plants have been raised, with 50 to 70 leaves on a stem, 3 or 4 times as many as in ordinary Herzegovina. At the present time the variety is grown on a large scale in the Lecco province, where it

yields from 2 570 to 2 646 lbs. of leaves per acre. The only fault of this plant is that the topmost leaves are lost because they ripen very late. It is very probable that Giant Herzegovina corresponds to the Austrian Gradatz which was apparently obtained it in 1908 in the Sinj Experimental Station by natural crossing probably with a Turkish tobacco. This vigorous type might be used in Albania as a basis for hybridization. Besides this, recourse might be had in Albania (as has already been done in Montenegro) to the growing of certain Macedonian types belonging both to the Bashi-Bagli group with stalked leaves and to the Basna group with sessile. leaves. It would be necessary to restrict these to districts where the growers were willing and able to manipulate the produce carefully.

Without doubt Porsician, which is a good Bashi-Bagli, should be tried first, as it has given good results in the Lecce province, and it is occasionally met with in very restricted areas in Central Albania. Other types might then be tried, including Zinha, Mahala, Edyrnegik, Kirs, Xeres, Aya-Soluk, Samsun etc. besides many other varieties of tobacco, from temperate or subtropical zones, differing in type from the Herzegovina and Macedonia tobaccos, such as Maryland, Burley, Italia × Kentucky, Bright etc. On the other hand tropical types of tobacco such as Sumatra, Java, Havana, Saint Dominique, and Bresil, do not succeed in Albania because they are not suited to the climate of this region.

1289 – **New Varieties of Italian Tobacco, Resistant to *Thielavia basicola*** (1). — BENINCASA M., in *Ministero delle Finanze, Direzione Generale delle Privative, Bollettino Tecnico della Coltivazione dei Tabacchi pubblicato per cura del R. Istituto sperimentale in Scafati* (*Salerno*), Year XV, Nos. 1, 2, pp. 29-33. Scafati, January-February and March-April, 1916.

In an earlier article (*Bollettino Tecnico del R. Istituto sperimentale di Scafati*, No. 5, 1914) the writer described some experiments which showed that the decline in the growing of Kentucky tobacco in some parts of Italy was due to root rot, and, as all other remedies proved useless, the planting of special resistant varieties was advised. In the present paper the best methods of growing these new varieties are discussed, and attention is drawn to their industrial characters and to the impetus that has been given to tobacco growing in the districts where they have become established. These varieties are chiefly hybrids and in addition to being resistant to *Thielavia basicola* they have other advantages from the growers' standpoint and they possess valuable commercial qualities. As these varieties are becoming more and more local in character they may be grouped according to the districts in which they are chiefly grown, as follows:

*Hybrids of Cava dei Tirreni.* — Numerous hybrids of heavy tobacco have been tested in this locality during the last few years, and Italia × Kentucky and Salento × Kentucky have become established.

According to Dr. ANGELONI, since Italia is a hybrid between Kentucky and Sumatra, Italia × Kentucky possesses the hereditary characte-

(1) See also *B.* 1912, No. 234. (*Ed.*)

ristics of Kentucky and Sumatra in the proportion 3 : 1. This variety is earlier and develops more quickly than Kentucky and it is much more resistant to root rot.

The tobacco is finer and lighter, with a stronger smell. It likes a fertile and open soil, and a rather warm climate. In localities other than Cava de Tirreni it has not always proved successful.

Salento is a hybrid between Kentucky and Cattaro, so that Salento × Kentucky possesses the hereditary characteristics of Kentucky and Cattaro in the proportion of 3 : 1 and is more resistant to root rot than is Kentucky. It is earlier and develops more quickly and also it is less exacting as regards soil and climate. But, like Italia × Kentucky, it is subject to rust after the first cold dews, especially when ripening is very late, so that it is not advisable to plant this variety in places where tobacco is attacked by oidium. It is more productive than Kentucky but is less valuable for commercial purposes.

When Italia × Kentucky is crossed with Salento × Kentucky the resulting strain (which is not yet properly fixed) combines the good qualities of each of the parent hybrids and eliminates their defects. It seems that repeated crossing of tobacco renews its vitality and increases its vigour of growth.

The introduction of hybrids into Cava de Tirreni has not only checked the decline in the growing of Kentucky tobacco but it has increased the yield per acre about 20 per cent. In addition to this less labour is needed, as the young plants root more easily.

*Pontecorvo hybrids.* — For several years the damage caused by root rot at Pontecorvo was remedied by the planting of Salento × Italia, but at the present time this hybrid is being gradually replaced by Moro × 3 Kentucky.

Salento × Italia from the phylogenetic standpoint possesses the characteristics of Kentucky, Cattaro and Sumatra in the proportion 2 : 1 : 1, and it is one of the varieties that are the most resistant to *Thielavia*. It is early, hardy, and very accommodating as to climate and soil, but is easily damaged by the wind as it has only a few spreading and fragile leaves, so that it is not recommended for distribution.

Moro × 3 Kentucky possess characteristics of Kentucky and Moro di Corvi in the proportion of 7 : 1. Botanically it differs little from Kentucky, but it is earlier and is sufficiently resistant to *Thielavia* to pass safely through the critical period of rooting when planted out. On the whole this may be called an improved Kentucky.

In order to increase the resistance of Moro × 3 Kentucky and the yield of Salento × Italia these two hybrids have been crossed with one another for two season, with very promising results.

*Salento in the Benevento region.* — Salento is a hybrid between Kentucky and Cattaro raised about 1900 at the Scafati Institute in order to obtain a low priced pipe and cigarette tobacco, and for several years it was grown for that purpose only in the region of Lecce and other parts of Italy. In 1906 experiments were made in the Benevento Gardens to remedy the trouble

caused by the wholesale loss of the young plants of the variety Burley, which was grown there at that time, and Salento was more successful than any of the other Italian hybrids. Salento shows the characters of both its parents. It is very vigorous, fairly early, and very adaptable as to soil and climate, it stands drought well, is very resistant to *Thielavia*, and is hardly at all susceptible to rust and öidium. Commercially it is inferior to Kentucky, chiefly on account of its percentage of large veins, but, under the conditions in which it is grown in the Benevento region it becomes much finer and resembles Seedleaf rather than Kentucky. In the Italian industry it has no equal as a substitute for Kentucky.

The average production of the Benevento Gardens was 1319 lbs. per acre when Brésil tobacco was grown ; the yield fell to 1167 lbs. with Kentucky and to 972 lbs. with Burley ; in 1914 it rose to 2050 lbs. with Salento.

As cigar tobacco Salento is only grown in the region of Benevento ; when it is planted elsewhere it easily loses its fine qualities.

To sum up, several new Italian varieties have been produced which are more or less resistant to root rot. The chief characters of these new varieties are as follows :

1) Most of them resemble Kentucky in their botanical and commercial characters but they are more resistant to *Thielavia*.

2) The less closely the hybrid resembles its parent Kentucky the farther removed is the product from the heavy type of tobacco. The first character to disappear is the compactness of the tissues, a quality which seems to be determined more by the environment then by anything else as in the Italian Kentucky the tissue is less compact than it was in the original Kentucky.

3) In spite of the lighter weight of the tissue the parent Cattaro considerably raises the yield, so that under normal conditions the hybrids of Cattaro are more productive than Kentucky, while all the others are less productive.

4) In addition to being more resistant to root rot the new varieties are earlier, they develop more rapidly and can stand drought better ; they are hardier and at the same time better adapted to the Italian climate. These qualities tend to become strengthened by repeated crossings.

5) New varieties of similar characters and constitution tend to become localised in distribution.

The introduction of these hybrids has had a considerable influence upon the production of the Kentucky type of tobacco in the three zones mentioned. In an appendix, the yield of the hybrids is compared with that of pure Kentucky.

1290 - **Experiments on Tobacco Fermentation in Java.** — DE VRIES O., in *Mededeelingen van het Proefstation voor Vorstenlandsche Tabak*, No. XXI. Samarang, 1915.

A plant has been invented to exhaust the air from the interior of fermenting stacks of tobacco, and the results obtained are described in the present paper. The apparatus consists of rings of perforated iron tubing which are placed at different heights in the stack and which are connected

with an air pump by means of tubes. Stopcocks regulate the suction in the various tubes, and the temperatures in the differents parts of a stack are registered by electro- thermometers. The object is to keep the temperature constant at a pre-determined point, as if this could be maintained for a certain time it would do away with the inconvenience of remaking the stack when the tobacco heats too much, a process which greatly increases the percentage of broken leaves.

This plant has been improved during the last year and has given good results with hands of tobacco placed in the middle of the stacks, while the rise in temperature can now be checked at any desired point. Unfortunately after the temperature has been lowered, the cooling process continues and cannot be stopped. The hands placed towards the outside of the stack do not derive any benefit from the aspiration of the air, and consequently the stack must be remade for their benefit. It is hoped that better results will be obtained by covering the stack with isolating material.

A large thermostat has been devised for regulating the rise and fall of temperature during fermentation, but the experiments so far have not have not given any positive results. Special tests have shown that during the first few days the lower layers of a stack heat up most, whereas later on the hands placed in the middle of the stack reach a rather higher temperature than those lower down.

Other experiments have shown that if the stacks are made too large and if moist tobacco is used they may overheat badly, resulting in serious deterioration in the tobacco, even if the overheating does not cause the stacks to catch fire.

FRUIT GROWING

1291 – **The Fruiting of Trees in Consecutive Seasons.** — PICKERING S., in *Journal of Agricultural Science*, Vol. VIII, Part I, pp. 131-135. Cambridge, September 1916.

Points of considerable interest, both scientific and practical, are raised by the question as to whether a tree which fruits exceptionally well as compared with its fellows in one season, will tend to fruit exceptionally well, or the reverse, in the following season. We know of no definite reason why the behaviour of a tree as regards fruiting should alternate in consecutive years, and no such behaviour has been observed in the case of animals. Its doing so would imply that fruiting is due to the gradual accumulation of some substance in the tree, which becomes exhausted whenever heavy bearing occurs, and that the stock of this substance does not become properly replenished till after another season has elapsed.

The difficulties in obtaining exact measurements of the relative behaviour of any two or more trees in consecutive seasons are considerable. The weight of fruit or the number of fruits may be recorded, but, unless the trees are absolutely similar in size, disposition of branches, situation, etc., which is impossible, the superiority of the one over the other as regards inherent fruiting capabilities may be misleading. On the other hand the trees under observation may be classified by inspection, grouping them according to the extent which they are loaded with fruit, independent of their size, and then comparing the classification in one year with that in

the following year. This method avoids errors due to difference in the size of the trees, but it has the disadvantage of being based on the judgment of the observer, and not on actual weights. This latter method was adopted in the case of one series of observations on trees at Harpenden, and the former in the case of the other series on trees at Ridgmont.

Whichever method of observation was adopted the results were treated as follows; two selected trees were numbered 1 or 2, according to which of them bore the heavier crop in consecutive seasons; then, comparing the results in two consecutive seasons, if the order of fruiting had been the same (consecutive fruiting) the difference between the numbers given to the trees would be 0, if the order had been reversed (alternate fruiting) the difference would be 1; whereas if neither consecutive nor alternate fruiting prevailed, and the results were dependent on chance or on external conditions, the differences would, on the average, be 0.5. An average difference, for instance, of 0.75 would be halfway between 1 and 0.5, indicating that the results were dependent on the alternating tendency to the extent of 50 per cent., and on chance fruiting to the extent of 50 per cent. Some of the results obtained by this method are given in Table I.

TABLE I.

| Place | Varieties | Dates | Instances | Fruiting indicated | | |
|---|---|---|---|---|---|---|
| | | | | Consecutive | Alternate | Chance |
| Harpenden | Several | 1899–1903 | 332 | 0 | 44 | 56 |
| Ridgmont | Bramley | 1904–1913 | 1 050 | 12 | 0 | 88 |
| » | Cox | 1898–1909 | 840 | 16 | 0 | 84 |
| » | Potts | 1897–1904 | 1 266 | 5 | 0 | 95 |
| » | Stirling | 1897–1913 | 366 | 0 | 6 | 94 |
| » | 117 varieties | 1906–1913 | 1 207 | 15 | 0 | 85 |

There can be no doubt but that the results at Harpenden and Ridgmont are very different, but the Harpenden results must be discounted to a certain extent as the number of instances available is smaller.

In Table II the yields from the Stirling Castle, Bramley and the Variety plantation are given, the numbers giving the relative magnitude of the crops compared, in the case of Stirling Castle, with the crop in 1900 as 100, and, in the other cases, with that of 1911 as 100.

A plus or minus sign has been placed after the values showing whether they are above or below the means of the preceding and succeeding seasons, and the extent to which these signs alternate, though not without some irregularities, is very remarkable. In the case of Cox and Potts no such alternations were recognisable. The chief factor affecting the alternation of bearing in early flowering varieties is the incidence of spring frosts.

TABLE II.

| | Stirling | Bramley | Varieties |
|---|---|---|---|
| 1897 | 3 | — | — |
| 1898 | 30 | — | — |
| 1899 | 6 — | — | — |
| 1900 | 100 + | — | — |
| 1901 | 47 — | — | — |
| 1902 | 144 + | — | — |
| 1903 | 0 — | — | — |
| 1904 | 148 + | 35 | 0 |
| 1905 | 0 — | 6 — | 0 — |
| 1606 | 144 + | 7 + | 12 + |
| 1907 | 38 — | 20 + | 20 + |
| 1908 | 95 + | 7 — | 15 — |
| 1909 | 171 + | 103 + | 34 + |
| 1910 | 264 + | 9 — | 13 — |
| 1911 | 78 — | 100 + | 100 + |
| 1912 | 47 — | 0 — | 10 — |
| 1913 | 207 + | 103 + | 114 + |
| 1914 | 0 — | 0 — | 0 — |
| 1915 | 549 + | 159 + | 114 + |

The results argue against any tendency in the individual trees towards alternate fruiting, as, if any such innate tendency existed, it would not be exhibited by different individuals in the same year : therefore in a plantation consisting of many individuals, even of the same variety, an average uniformity of production would result.

1292 – **Sources of Supply of Hazel-nuts.** *Bulletin of the Imperial Institute*, Vol. XIV, No. 2, pp. 261-267. London, April-June 1916.

The various kinds of hazel-nuts are the produce of species of *Corylus*, a genus of shrubs or small trees native to the temperate parts of Europe, Asia and North America. The different kinds of nuts are distinguished by trade names according to their country of origin. A considerable quantity of hazel-nuts is produced in the United Kingdom, and supplementing this supply there is a large annual import derived chiefly from Spain, Italy and Asiatic Turkey. Hazel-nuts are not at present grown on a commercial scale in any of the British colonies. It is probable that hazel growing would succeed in parts of the Union of South Africa, British East Africa, Australia and Cyprus.

*United Kingdom.* — The hazel-nuts produced in this country are de-

rived from cultivated forms of *Corylus Avellana*, or hybrids between that species and *C. maxima*. They are grown chiefly in Kent. Generally speaking, varieties in which the leafy cups are shorter than the nuts are termed cob-nuts, whilst those with cups as long as or longer than, the nuts are termed filberts. The varieties most commonly met with among the cob nuts are Kentish Cob or Lambert Filbert, Merveille de Bollwyller, Pearson's Prolific and Berger; among the filberts, Red, White, Cosford, Frizzled. A yield of 100 tons of nuts has been frequently obtained from a plantation of 100 acres in Kent, whilst as high a yield as 2 ½ tons per acre was recorded for some localities in 1904. The value of hazel-nuts depends largely upon the size of the almond crops, for which they are used as a cheap substitute. The usual wholesale price is about 5*d*. per lb., but during the season 1915-1916 the prices ruled very high.

*Spain.* — In Spain the hazel-nut succeeds everywhere, but it is chiefly grown in the Catalan Provinces of Gerona and Tarragona. The nut bushes are usually grown in fields or gardens inter-cropped with other products. In Gerona the principal nut-growing area is the Selva, in the district of Santa Colonna de Farnés, whilst in Tarragona the crop is produced in the neighbourhood of the capital and at Tortosa and Montblanch. The light but moist soil of this area and the facilities for exporting these nuts have made nutgrowing a flourishing industry. The hazel-nuts imported into the United Kingdom from Spain are known on the market as Spanish and Barcelona nuts; the former are shipped from Gijon, a port in the Bay of Biscay, and the latter from Tarragona, a Mediterranean port. The Spanish nuts are grown in the Provinces of Galicia and Asturias, and are considered to be the produce of cultivated forms of *C. maxima*. The varieties chiefly grown are known locally as Mallorquina or Negreta de la Selva, a large nut with a hard reddish shell completely filled by the kernel, and Asturiana, which is a medium-sized or small nut produced in bunches of three or four.

The so-called Barcelona nuts, which are grown in Tarragona, are derived from *C. maxima* var. *barcelonensis*. The average yield is said to be about 55 lbs. of nuts per bush. As seen in commerce the nuts usually have a dark shell, which is due to their being kiln-dried in order to improve their keeping qualities. They are shipped from Tarragona in bags containing about 128 pounds each.

Of recent years there has been a demand for shelled nuts, which are shipped in bags weighing about 220 lbs. each. About half the entire crop has been exported in this condition, the principal importing countries being Germany, the United States, and the United Kingdom. The total annual crop of hazel-nuts produced in Spain is valued at over half a million sterling, whilst the quantity exported is valued at about £ 400 000.

*Italy.* — Large quantities of hazel-nuts are produced in South Italy, particularly in the province of Avellino. A considerable part of the crop is annually exported from Naples, chiefly to the United States, Germany, Holland, Austria-Ungary, France and the United Kingdom (arranged in order of importance). In 1909, 6 037 tons were exported from Naples and

in 1913 3777 tons. Of recent years Sicilian cob-nuts have attracted attention on the English market. These nuts are grown in woods at an elevation of more than 1 200 feet above sea level. The highest yield recorded for Sicily was in the year 1913, when the crop amounted to 13 000 tons. These nuts have been sent chiefly to Central Europe from the ports of Palermo and Messina in bags of 50 kilos. (110 lbs.) each. In 1913 1 068 metric tons of hazel-nuts were exported from Palermo and 945 British tons from Messina.

*Cyprus.* — In Cyprus the hazel-nut grows luxuriantly in the hill villages, and the nuts produced are of good size and fine appearance, They are gathered before they attain full maturity so that they soon become rancid. The exports are at present small, and the extension of the cultivation of this crop in Cyprus is urged.

*Asia Minor.* — The hazel-nuts obtained from Asia Minor are known as Turkish or Trebizond nuts, and in former times they were spoken of as Pontic hazels. They are the produce of *Corylus Colurna* a tree of moderate size, attaining a height of 60 to 80 ft. if allowed to develop fully. This species, or one or other of its geographical forms is distributed from South east Europe through Asia Minor and the Caucasus to the Himalayas and Western China. The cultivation of hazel-nuts for export is extensively carried on in the Black Sea coast region, from Khopa, on the Russian frontier, to Fatsa, which is just east of Unieh. Each tree produces annually from 16 to 24 lbs. of nuts, which are of three kinds: the round, the pointed, and the almond-shaped. The pointed are usually 10 per cent and the almond shaped 30 per cent dearer than the round nuts, which form about 70 per cent of the whole crop. The bulk of the round nuts are shelled before being shipped. The nuts are first sorted by revolving screens, then cracked by means of stone-mills, after which the kernels are dried in the sun and then packed in sacks for export. The shelling reduces the weight to half so that the freight charge is reduced by 50 per cent. 667 045 cwts. of hazel nuts were produced in the Trebizond Vilayet in 1913. The Kerassond is the chief district of production, its crop usually averaging from three-eighths to nearly five-eighths of the whole. The combined crops of Trebizond, Yomura, Off, Surmeneh, and Tazestan furnish between them from about one-quarter to three-eighths, whilst the remainder comes from the Tripoli Eleon, Ordu, and Sharli Fol districts in unequal proportions. Of the exports, about 48 per cent. have usually gone to Germany, 22 per cent. to Austria-Hungary, and about 14 per cent. to France and the United Kingdom. Exports to Russia have practically ceased, as nuts are successfully grown within Russian territory from Batum to Soukhoum Kaleh.

Hazel nuts are used as dessert-nuts, and also in the preparation of various nut foods and nut chocolate. They yield a bland golden-yellow oil which resembles almond oil, but has a lower iodine value.

The composition of fresh kernels of hazel (filbert) nuts is shown in the following table:

| | Hazel-nut kernels Per cent |
|---|---|
| Water | 48.0 |
| Crude proteins | 8.4 |
| Fat | 28.5 |
| Starch, etc. (by difference) | 11.1 |
| Fibre | 2.5 |
| Ash | 1.5 |
| Nutrient ratio | 1 : 9.12 |
| Foods units | 103.1 |

1293 – **Vine Growing at Benghazi, Tripoli.** — ZANON V., in *Giornale di Agricoltura della Domenica*, Year XXVI, No. 43, p. 347. Piacenza, October 22, 1916. VINE GROWING.

The region of Benghazi is very suitable in climate and soil for vine growing. The mean annual temperature does not exceed 68.7°F ; the range of temperature is the best for obtaining an early harvest (the ordinary grape ripens there at the end of June or the beginning of July), while the sharp changes of temperature in the spring do not interfere with the ripening of the fruit ; the annual rainfall is 18 inches. This precipitation is not sufficient to give a good harvest after a few years growth unless other water can be utilised, consequently the vineyards are only established in the neighbourhood of the ouadäi, the torrent which collects the rainfall from the mountain zone, and they are so placed that the water may be rapidly distributed. Under the local system of cultivation the shoots of the vines are wisely left to spread freely over the earth so that the gales do no damage. With the exception of a narrow sandy area which borders the district the soil is a red ferrugineous calcareous clay, the best that exists in Libya. As a rule the red soils of Benghazi are very rich in potash and phosphorus, they contain varying proportions of chalk in different localities and are always deficient in humus.

The vines are always kept low, and in gardens in inhabited areas they are even cradled in the ground. Two ditches, 30-36 inches deep and 20 inches wide are dug when planting and the earth is thrown up in the direction of the wind so as to form a shelter for the young plant which is thus well protected. Later on the earth is gradually levelled for greater convenience at the time of annual cultivation. Cuttings are always planted and 3-year old vines have shoots from 23 to 30 feet long.

Nearly all the varieties of vines grown in Benghazi and its environs are of Greek origin, chiefly from Candia. Six of them are thus described :

1) *White grape :* the earliest variety.

2) *White grape of Constantinople,* called Karidata by the Greeks : an excellent table grape.

3) *Black grape of Candia :* this is the most commonly grown vine in Benghazi and its environs ; very hardy, growth luxuriant, bunch winged, sometimes very large (up to 4 ½ to 6 ½ lbs.), with large berries (reaching 1 ¼ inch in diameter).

4) *Black grape :* much less luxuriant and productive than the preceding ; bunch elongated, usually simple.

5) *Black grape of Canea,* called Stafili Romeika by the Greeks: used for wine making.

6) *Red grape:* strong growing plant; bunch very large, winged, compact, but difficult to transport because of the watery pulp of the berries and the thinness of the skins.

It is probable that the method of cultivation could be improved by

1) spacing the rows at least 6 ½ feet apart.
2) deep working of the soil.
3) use of chemical manures.

It is useless to attempt to establish vineyards where the ouadai does not come, or to grow the plants on the system of training them above the level of the soil.

In addition to table grapes the colony produces sufficient wine for its own consumption.

## LIVE STOCK AND BREEDING.

HYGIENE OF LIVE STOCK

1294 – **The Immunisation of Cattle against Tuberculosis; Results of 10 Years' Trials Carried out at the Leipzig Veterinary Institute.** — EBER A., in *Centralblatt für Bakteriologie, Parasitenkunde und Infektionskrankheiten,* Vol. 78, No. 5, pp. 331-364. Jena, October 12, 1916.

In the spring of 1904 some large herds of cattle were vaccinated as a preventive measure against tuberculosis. The experiments were undertaken largely as a result of work done at the Veterinary Institute of Leipzig between 1902 and 1904 when, at the instigation of VON BEHRING, two animals were given a course of hypodermic and intravenous injections of vaccine and then tested for resistance to virus from an infected subject. They proved more resistant than untreated animals, so it was decided to extend the trials on a large scale using von Behring's « Bovovaccin » for the purpose. The following year another vaccine, « Tauruman », was tested, and in 1908 Klimmer's « Antiphymatol » was also used according to the methods of HEYMANS of Ghent.

Altogether 797 head of cattle were immunised during the 10 years' trials, while 169 animals were used as controls, and the experiments were distributed over 12 estates which represented different types of stock management in the Kingdom of Saxony, in Prussia and in the Duchy of Saxe-Altenberg. No fees of any kind were charged for vaccination but the owners of the herds were expected to give immediate notice of the death or slaughter of a treated subject, so that a careful post-mortem examination could be made. The total number of deaths and slaughterings notified amounted to 258 of which 39 were control animals. Whenever possible the post-mortem was carried out by the writer himself, failing which it was entrusted to a local veterinary surgeon who was given a special form on which to record his results.

Periodic tuberculin tests were also made both before and after vacci-

nation and throughout the experiment stress was laid less on the number of cases dealt with than on a careful study of the subjects actually treated.

It is pointed out that as in all other trials bearing on the propagation of tuberculosis, vaccination must be accompanied by prophylatic measures and must be carried out under strictly hygienic conditions. Consequently it is extremely difficult to distinguish between the effects of the vaccine and those due to the improved conditions of life. The experiments did not indicate that better results were obtained where vaccination was practised than when the treatment was confined to prophylactic measures alone. A special study was made of the efficiency of the Heymans vaccine. Though it cannot be denied that vaccines containing tubercle bacilli, such as "Heymans' capsules", have shown a certain curative effect on tuberculous subjects when used year after year, and have therefore tended to check the spread of the disease in a herd, their action is quite uncertain and frequently fails without any apparent reason. Except in very occasional cases, no permanent cure has been obtained, symptoms of the disease reappearing even in spite of repeated vaccinations. Further, in four herds which were only slightly infected, three of which were being treated with Heymans' vaccine and the other Antiphymatol, the result of vaccination was to make a latent form of tuberculosis of the udder suddenly active. On the whole it may be said that the curative effects of vaccination are not of an order to make it a reliable means of checking tuberculosis in cattle.

The trials were interrupted at the outbreak of the War.

1295 – **A New Parasite on Sheep Maggot Flies** (1). — FROGGATT W. W., in *Queensland Agricultural Journal*, Vol. VI, No. 3, pp. 177-179. Brisbane, September 1916.

At the Government Sheep-fly Experiment Station, Wooloondool, (near Hay), a new chalcid parasite (*Chalis calliphorae*) has been discovered by T. McCARTHY on blowfly maggots (*Calliphora oceariae*). It consists of a small black wasp, about the size of the common house fly and it lays a single egg in each maggot before the latter seeks cover to pupate. The new parasite is hardy, easy to breed and will stand a long journey by post in a packet.

*Nasonia brevicornis*, which is already know as a parasite of the blowfly maggot, is more prolific than *Chalcis calliphorae* and equally hardy, but it does not attack the maggots till after they have pupated.

1296 – **A New Unit for the Estimation of Food Values.** — SUCHTING H., in *Journal für Landwirtschaft*, Vol. 64, No. 3, pp. 163-170. Berlin, October 19, 1916. FEEDS AND FEEDING

Kellner's "starch value" is a unit adopted for estimating and comparing the value of different foods and is estimated by converting all other substances in foods into terms of starch. This unit has been preferred to the "calorie" or energy unit for the practical reason that it is much larger and therefore simplifies calculations. The writer challenges the impracticability of the calorie and shows how it may be modified for use. Kellner always stated his starch values to a tenth of a kg. and with such a degree

(1) See also *B.* 1914, No. 1017; *K.* 1915, Nos. 401 and 1051.

of accuracy the equivalent calorie value certainly runs into large and unwieldy numbers ; but as the starch value of any one food is by no means constant and fluctuates to the extent of anything between 10 and 100 per cent according to the nature of the food, it would seem quite unnecessary to go into decimals of starch values. The writer proposes that a unit of 1 000 calories be adopted in the place of starch values (and decimals of starch value) and points out that even this unit is too small as 1 000 calories are equivalent to 0.25 kg. of starch. He considers this new unit to be more practical, simpler and more exact than starch values. From the physiological point of view too, it is more satisfactory to compare the animal body to an engine supplied with fuel and to obtain the food value in terms of the fuel, which can then be easily be converted into force, than to obtain the food value in terms of one of the substances in the food.

The value of digestible food substances would thus be expressed in heat units or large calories for which the name of " Kellner values" is proposed, and 1 kg. of starch, protein and fat would be equivalent to 4,4 and 9 Kellner values respectively. For example the Kellner value of 100 kgs. of wheat (95 per cent digestible) containing 9 per cent of protein, 1 per cent of fat and 64 per cent of nitrogen free extract would be :

| | | |
|---|---|---|
| 9 kgs. | protein . . . . . | $= 9 \times 4 = 36$ |
| 1 " | fat . . . . . | $= 1 \times 9 = 9$ |
| 64 " | N-free extract . . | $= 64 \times 4 = 256$ |
| | Total . . . . | $= 301$ |

$$\text{or } \frac{300 \times 95}{100} = 285 \text{ Kellner values.}$$

HORSES

1297 – **The Horse-Breeding Industry in Saskatchewan.** — *The Agricultural Gazette of Canada.* Vol. 3, No. 8, pp. 705. Ottawa, August 1916.

The development of the horse breeding industry in Saskatchewan, in the last 15 years, has been a considerable one, as indicated by the following figures, in which those for 1881 and 1891 are for Alberta and Saskatchewan combined :

| Year | Numbers of horses |
|---|---|
| 1881 . . . . . | 10 870 |
| 1891 . . . . . | 60 976 |
| 1901 . . . . . | 83 801 |
| 1911 . . . . . | 507 468 |
| 1915 . . . . . | 667 443 |

At an early date some of the horse ranches began the use of draft stallions for breeding, purposes, although most of them used thorough bred sires and raised a lighter type of animal. At present the use of sires of the draft breeds is the rule rather than the exception as the accompanying enrolment figures for 1916 indicate :

| | |
|---|---|
| Clydesdale | 1868 |
| Percheron | 670 |
| Shire | 68 |
| Standard Bred | 189 |
| Hackney | 52 |
| Throughbred | 27 |
| French Canadian | 1 |
| French Coach | 3 |
| German Coach | 7 |
| Suffolk | 30 |
| Belgian Draft | 126 |
| Saddle Horse | 6 |
| Shetland Pony | 1 |
| Morgan | 1 |
| Jack | 1 |
| Total pure breds | 3 056 |
| Grades | 606 |
| Crossbreds | 2 |
| Scrubs | 584 |
| Total | 4 248 |

Advanced legislation with respect to horse breeding provides for the annual enrolment of all stallions used for breeding purposes and the examination and licensing of all stallions used for service in municipalities included in the Licensed stallion District.

Saskatchewan Clydesdale are famous throughout Canada as representative of the best development, of this famous breed and show ring champions both male and female are owned by Saskatchewan breeders.

1298 – **Gestation and Sterility in Cows.** — STALFORS H., in *Monatschefte für praktische Tierheilkunde*, Vol. 27, No. 7-8, pp. 338-358. Stuttgart, May 27, 1916. CATTLE

I. *Studies on gestation.* — During the years 1907 to 1915 a large number of in-calf cows were examined for the purpose of determining in which horn of the uterus the fœtus was carried. The examinations were made per rectum some time between the sixth and fifteenth week of gestation, that period being the most favourable for the operation; fluctuation, asymmetry and an increase in size of the uterus were taken as symptoms of pregnancy. With at least half the animals under experiment the ovaries were also examined for corpora lutea though no records were kept of the observations.

Out of a total of 923 cows examined, 577 cows or 62.5 per cent of the cases carried the fœtus in the right horn of the womb, and 346 in the left horn, proportions which are approximately those found by other workers. With 105 of the cows, the animals were kept under observation for two successive periods of gestation and in 62 of the cases the fœtus was twice carried in the same horn, indicating that the one ovary was rather more productive than the other. The greater productivity of the right ovary with respect to the left is attributed to the pressure exerted by the paunch on the nerves and blood vessels of the left side as well as on the left ovary itself.

It was observed that the fertilised ovum frequently began its development in the body of the uterus rather than in the horn and only passed definitely into the horn at a later stage. This fact has been denied by many investigators, but in the present experiments considerable development and fluctuation was noted in the body of the uterus between the fourth and sixth weeks of gestation, whilst the horns remained about the same size.

II. *Influence of handling on the productiveness of ovaries.* — From 1910 to 1915 six herds containing from 12 to 100 cows each were kept under special observation being visited every 4 to 8 weeks and any barren animals were subjected to an operation on the ovaries. This consisted in an exploration per rectum and of a squeezing or crushing of corpora lutea or cysts which might have persisted in the ovaries. The uterine catarrh resulting from the operation was treated at the same time by vaginal injections. Out of 264 cows so treated more than half became normally productive again.

It is quite evident from the results of the experiments that the function of the ovaries was not interfered with by the handling, on the contrary it appeared to make them more productive. In 146 out of 211 cases of pregnancy after treatment (59.2 per cent) it was possible to trace the fertilized ovum to the ovary which had been treated. A number of these pregnant cows were maintained under observation and out of a total of 133, 81 or 60.9 per cent proved to have become absolutely normal again including a case of uterine catarrh independent of the ovaries. And of these normal pregnant cows, in 63 out of 77 cases (81.8 per cent) the fertilized ovum was traced to the treated ovary.

*Conclusions.* — In the cow the fœtus is borne in the right horn of the uterus more frequently than in the left, the frequencies being as 64 to 36.

The treatment of the ovaries by handling, if not carried out too violently, exerts no depressing, debilitating or deleterious action on the sexual functions or on the productivity of the ovaries. It may on the contrary reestablish and increase the functions of the ovary when the latter have been interfered with by such things as the persistence of corpora lutea or cysts in the ovary.

1299 – **The Advantages of Winter Calving.** — Gouin A., in *Comptes Rendus de l'Académie d'Agriculture de France*, Vol. II, No. 33, pp. 972-973. Paris, October 25, 1916.

Winter calves are often considered unsatisfactory, being looked upon as delicate and unsuitable for breeding stock. The writer brings forward his own experience which is in contradiction to these views. Between 1895 and 1913 he bred and raised 127 yearlings, chiefly heifers, of which 39 were born during the months of October to January and 88 from February to September. At twelve months the average weight of the winter calves was 561 lbs. and that of the spring and summer calves 600 lbs. Of the 127 yearlings, 60 were eventually brought into the milking herd and their weights three months before calving were 113 lbs. for the 20 born in winter while the other 40 only averaged 2 lbs. more.

The season of birth would therefore seem to have no influence on the

ultimate development of the animals, and where artificial rearing is practised winter calving is certainly more economical, for by feeding skim milk and a fat substitute the calves got on very well till the spring when they were old enough to take full advantage of the grass ; and when they were brought in the following winter, the winter calves had a big start over the summer ones and were able to be put at once on to a more economical ration.

1300 – ***Capra prisca* an Unknown and Extinct Race of the European Domesticated Goat.** — ADAMETZ, in *Mitteilungen der landw. Lehrkanzeln der K. K. Hochschule für Bodenkultur in Wien*, Vol. 3, No. 1, pp. 1-21. Vienna, 1915. GOATS

In 1913, a portion of fairly well preserved skull belonging to a fossil goat was received for examination from Prof. ED. VON LUBICZ VIERZATITOWSKI. It had been found together with two other similar skulls and the remains of a horse's skull when laying a water main at Hoczow in Eastern Galicia, at a depth of 15 ft. from the surface. A careful study of the skull showed that it belonged to a well defined extinct species of wild goat which was given the name of *Capri prisca* n. sp.

Up to the present it has been considered that the different varieties of the European domesticated goat are all descended from a common ancestor which is still represented by the Bezoar wild goat (*C. aegagrus*) ; and the fact that the position and conformation of the horns and rudimentary horns in the domesticated goats differ markedly from those of the wild goat has been attributed to somatic variation or mutation. When the skulls of *C. aegagrus* and of its sub-species the Cretan goat (*C. aegagrus cretensis*) and the wild goat of the Island of Erimomilos (*C. aegagrus pictus*) were compared with the skull of *C. prisca* the conformation of the chief bones was found to be different. But on the other hand the conformation of the skull of *C. prisca* was absolutely identical with that of the so-called Jura wild goat (*C. dorcas* Reichw. or *C. hircus dorcas* according to DE LORENZ-LIBURNAU who proved it to be merely a goat reverted to the wild state), and very similar to that of the majority of the European domesticated breeds, in particular the goats of Bosnia-Herzegovina, of Serbia and of Albania.

It would therefore seem that the hypothesis of the Bezoar goat as sole ancestor of the European domesticated breeds is untenable, as most of the latter are more probably derived from *C. prisca*. Some breeds however, such as for instance the old Alpine breed of Salzburg, are just as clearly related to *C. aegagrus*.

The writer is proceeding with a thorough examination of all available prehistoric material in the light of this latest discovery.

1301 – **Fish Meal as Food for Pigs.** — CROWTHER C., in *The Journal of the Board of Agriculture*, Vol. XXIII, No. 1, pp. 27-33. London, April 1916. PIGS

At the Experimental Farm of the University of Leeds (Garforth) feeding trials were carried out to test the value of fish meal as food for pigs. Twelve large white pigs ranging in age from 13 to 21 weeks were divided into two lots as evenly as possible, each lot consisting of 3 castrated hogs

TABLE I. — *Plan of experiment.*

| Period | General character of feeding | Average daily ration per lot of 6 pigs | | |
|---|---|---|---|---|
| | | | Lot *A* | Lot *B* |
| | | | Lbs. | Lbs. |
| Preliminary control 4 weeks June 15 to July 13 | Identical for both lots. No fish meal. | Bran | 2.4 | 2.4 |
| | | Sharps | 12.0 | 12.0 |
| | | Water | 72 | 72 |
| First transitional 1 week July 14 to 20 | Fish meal gradually introduced into ration of lot *A* in place of equal weight of sharps. | Bran | 3.0 | 3 |
| | | Sharps | 13.5 | 15 |
| | | Fish meal | 1.5 | — |
| | | Water | 90 | 90 |
| First experimental 6 weeks July 21 to August 31 | Lot *A*: bran, sharps, fish meal. Lot *B*: bran, sharps. | Bran | 4.1 | 4.1 |
| | | Sharps | 18.1 | 20.8 |
| | | Fish meal | 2.7 | — |
| | | Water | 107 | 107 |
| Second transitional 1 week September 1 to 7 | Rations gradually transposed. | Bran | 5.8 | 5.8 |
| | | Sharps | 27.5 | 25.3 |
| | | Fish meal | 1.4 | 3.6 |
| | | Water | 139 | 139 |
| Second experimental 6 weeks Sept. 8 to October 19 | Lot *A*: bran, sharps. Lot *B*: bran, sharps, fish meal. | Bran | 6.5 | 6.5 |
| | | Sharps | 32.5 | 27.1 |
| | | Fish meal | — | 5.4 |
| | | Water | 146 | 146 |
| Third transitional 1 week October 20 to 26 | Fish meal gradually introduced into ration of lot *A*. Ration of lot *B* unchanged. | Bran | 8 | 8 |
| | | Sharps | 36 | 33 |
| | | Fish meal | 4 | 7 |
| | | Water | 160 | 160 |
| Final control 3 weeks Oct. 27 to Nov. 17 | Identical for both lots. Fish meal included in ration. | Bran | 9.8 | 9.8 |
| | | Sharps | 42.2 | 42.2 |
| | | Fish meal | 7.0 | 7.0 |
| | | Water | 182 | 182 |

and 3 gilts. The experiment began on June 15, 1915 and lasted 22 weeks. For the first 4 weeks each lot was given the same ration of bran and sharps. Fish meal was then gradually introduced into the ration of lot A in the place of an equal weight of sharps. Seven weeks later the rations were gradually transposed, the fish meal being gradually replaced by sharps in the ration of Lot A and introduced in the place of sharps in the ration of

TABLE II. — *Composition of fish meal*

| | Meal used in experiment | Average of 7 samples |
|---|---|---|
| | per cent | per cent |
| Moisture | 4.6 | 12.9 |
| Protein | 52.7 | 55.8 |
| Oil | 6.7 | 3.8 |
| Ash, including | 25.3 | 25.3 |
| Phosphoric acid | 9.5 | 8.6 |
| Chorides expressed as Nacl | 2.6 | 2.2 |

TABLE III. — *Average weekly gain in live weight per pig.*

| Period | Lot *A* | | | Lot *B* | | |
|---|---|---|---|---|---|---|
| | Hogs | Gilts | Average | Hogs | Gilts | Average |
| | Lbs. | Lbs. | Lbs. | Lbs. | Lbs. | Lbs. |
| Preliminary control | 5.3 | 5.5 | 5.4 | 4.8 | 5.2 | 5.0 |
| First experimental | 11.0 | 10.6 | 10.8 | 8.3 | 10.8 | 9.5 |
| Second » | 10.3 | 9.0 | 9.7 | 11.5 | 10.6 | 11.1 |
| Final control | 15.4 | 12.0 | 13.7 | 12.5 | 11.1 | 11.8 (1) |

(1) This average is depressed by the abnormally low gain recorded in the last week when 2 gilts, being *in oestro*, not only failed to gain in weight, but caused general disturbance of the whole lot. The average for the preceding 2 weeks were: Lot *A*, 14.4 lbs.; Lot *B*, 14.7 lbs.

Lot B. Seven weeks later again fish meal was once more substituted for an equal weight of sharps in the ration of Lot A, but was not removed from the ration of Lot B, so that for the last 4 weeks each lot received fish meal along with the bran and sharps and for the last 3 weeks the rations were identical in every respect. The general plan of the experiment is summarised in Table I.

The composition of the fish meal used is given in Table II, average gains in live weight are summarised in Table III, and in Table IV are set out the quantity of foodstuffs consumed and the average cost of the rations based on the following prices per ton:

| | £ | s | d |
|---|---|---|---|
| Bran | 6 | 16 | 4 |
| Sharps | 9 | 12 | 6 |
| Fish meal | 10 | 10 | 0 |

Fish meal as compared with sharps effected an extra gain in live weight of 1.3 lb. per pig per week on the average of the first experimental

TABLE IV. — *Average amount and cost of weekly ration per pig.*

| | Lot *A* | | Lot *B* | |
|---|---|---|---|---|
| | Weight | Cost | Weight | Cost |
| | lbs. | *d* | lbs. | *d* |
| *First experimental period.* | | | | |
| Bran | 4.8 | 3.50 | 4.8 | 3.50 |
| Sharps | 21.1 | 21.73 | 24.2 | 24.92 |
| Fish meal | 3.1 | 3.49 | — | — |
| *Total* | 29.0 | 28.72 | 29.0 | 28.43 |
| *Second experimental period.* | | | | |
| Bran | 7.6 | 5.55 | 7.6 | 5.55 |
| Sharps | 37.9 | 39.04 | 31.6 | 32.55 |
| Fish meal | — | — | 6.3 | 7.09 |
| *Total* | 45.5 | 44.59 | 45.5 | 45.19 |

| | With fish meal | | Without fish meal | |
|---|---|---|---|---|
| | Weight | Cost | Weight | Cost |
| | lbs. | *d* | lbs. | *d* |
| *The two periods combined.* | | | | |
| Bran | 6,2 | 4.53 | 6.2 | 4.53 |
| Sharps | 26.35 | 27.14 | 31.05 | 31.98 |
| Fish meal | 4.7 | 5.29 | — | — |
| *Total* | 37.25 | 36.96 | 37.25 | 36.51 |

period and of 1.4 lb. per pig per week on the average of the second experimental period or an average gain for the whole period of 1.35 lb. weekly. On the other hand the use of fish meal to the extent of one eighth of the total ration as a substitute for an equal weight of sharps increased the cost of feeding by barely ½ *d* per pig per week. If, further, the residual manurial values be allowed on the scale suggested by Hall and Voelcker, the fish meal becomes actually cheaper since the manurial value of the fish meal is £ 4 8*s* per ton, whilst that of the sharps is but £ 1 9*s* per ton. But even leaving out of account the manurial value and considering only the live weight gains, there can be no doubt as to the decided benefit of partially replacing sharps by fish meal.

No objectional taint was imparted to the carcass of the animal by the use of fish meal.

1302 – **Poultry Breeding in Tunis ; Imported and Native Breeds.** — CHENEVARD W., in *Bulletin de la Société d'Horticulture de Tunisie*, Year 14, No. 99, pp. 157-160. Tunis, October 15, 1916. POULTRY

" Kabyles " is the term commonly used for all native poultry in Tunis, but for practical purposes the three following classes may be distinguished :

1) The true Kabyle, generally partridge colour with a long body, yellow legs and a weight which rarely goes above 2 lbs.

2) The Arab type which is rather a better kind of bird, more compact in form, with yellow or green legs and various colourings of plumage, generally tending towards a yellow brown ; its average weight is 2.2 to 2.6 lbs.

3) All other birds.

Good results have been obtained with the Arab by selection and by crossing with imported varieties, birds weighing up to 3 to 4.5 lbs. being obtained, but the quality of the flesh is very poor. Kabyles are too small ever to prove of economic importance.

An experiment was carried out in which the weights of birds of the Arab type were compared with those of a Malines cross known as the Tunisian Cuckoo throughout the period of their growth. The mean figures are given below.

| | Weight of egg or chick | |
|---|---|---|
| | Tunisian Cuckoo oz. | Arab oz. |
| Egg before incubation | 2.07 | 1.75 |
| " after 5 days incubation | 1.96 | 1.65 |
| " " 10 " " | 1.86 | 1.58 |
| " " 15 " " | 1.75 | 1.47 |
| " " 21-22 " chick 1.40, shell 0.25 | 1.65 | chick 1.26, shell 0.14: 1.40 |
| Loss of weight during incubation | 0.42 | 0.35 |
| Chick 3 days old | 1.30 | 1.12 |
| " 5 " " | 1.50 | 1.26 |
| " 10 " " | 1.75 | 1.30 |
| " 15 " " | 2.07 | 1.43 |
| " 20 " " | 2.63 | 1.68 |
| " 25 " " | 3.53 | 2.07 |
| " 30 " " | 5.53 | 2.98 |
| " 45 " " | 12.60 | 5.75 |
| " 60 " " | 21.70 | 9.59 |
| " 75 " " | 30.40 | 13.13 |
| " 90 " " | 44.10 | 18.38 |
| " 105 " " | 59.50 or 3 $^3/_4$ lbs. | 24.68 or 1 $^1/_2$ lb. |

The feeding consisted of hard egg and bread sop to start with, followed by barley mash, cooked rice and sour milk together with millet and tail corn, the consumption per head up to 105 days old and per lb. of live weight being as follows :

| | Tunisian Cuckoo | | Arab | |
|---|---|---|---|---|
| | Per head lbs. | Per lb. live weight lbs. | Per head lbs. | Per lb. live weight lbs. |
| | — | — | — | — |
| Dry matter | 21.6 | 5.8 | 9.16 | 5.9 |
| Digestible protein | 2.9 | 0.8 | 1.3 | 0.9 |
| " fat | 1.5 | 0.4 | 0.7 | 0.5 |
| " carbohydrates | 12.7 | 3.4 | 5.8 | 3.7 |
| Cellulose | 0.5 | 0.1 | 2.0 | 0.1 |
| Starch value | 16.1 | 4.3 | 7.4 | 4.8 |

The Arab birds required about 10 per cent more food than the Tunisian Cuckoo.

1303 - **Fecundity in Relation to Stamina.** — DUNNIGLIFF (Jun.) A. A., in *The Agricultural Gazette of New South Wales*, Vol. XXVII, No. 7, pp. 507-510, Sydney, July 1916.

The danger signal has been raised by more or less authoritative critics in various parts of the world that striving for higher and higher egg production, and the breeding from hens of great fecundity, can only result in degeneration of the constitution of the stock and consequent disaster to the breeder. Egg laying competitions have been pointed out as exercising a dangerous influence in this direction. In New South Wales however where these competitions have been in progress longer than in any other part ot the world there is no evidence of loss of stamina in very prolific birds. The attainments of high records in this country has never been subordinated to practical and utilitarian considerations, restrictions having always existed with regard to quality, size of eggs, and weight of pullets

It is instructive to trace the results of breeding from hens that have put up high records in competitions. For instance, the pen of White Leghorns which won the second two-years' test with 1474 and 1150 eggs in the first and second years respectively and the pen which won the fourth two-years' test with 1324 and 1045 eggs both belonged to the same owner and proved entirely satisfactory as breeders both as regards fertility and constitutional vigour of the progeny. Another example is the White Leghorn hens which won the 1912-1913 competition with 1461 eggs and which were used later with other birds of the same stock in the single pen test of 1914-1915 when they achieved a world's record. The four best hens in that group had individual records of 267, 270, 270,288 eggs, yet when used afterwards for breeding, they gave no evidence of having suffered constitutionally from the strain of the great production.

The available evidence warrants the conclusion that a hen is not to be regarded as a doubtful transmitter of stamina to her progeny because she is the possessor of the faculty of fecundity in a high degree. The 200 egg hen has now become a commonplace in Australia and there seems no reason why it should not be eventually replaced by strains producing 250 eggs or even more.

FISH CULTURE.

1304 - **The Distribution of Fish and Fish Eggs during the Fiscal Year Ending 1915.** — JOHNSON R. S., *Department of Commerce, Bureau of Fisheries, Document* No. 828, pp. 1-138. Washington, D. C., 1916.

During the fiscal year 1914-1915 the breeding establishment of the U.S. Bureau of Fisheries bred and distributed about fifty species of fresh-

*Number of eggs, small fry and small fish distributed by the U. S. Bureau of Fischeries during the fiscal year* 1914-1915.

| | Eggs | Small fry | Small fish, one year old fish, full grown fish | Total |
|---|---|---|---|---|
| *Ameiurus* spp. | — | — | 1 665 793 | 1 665 793 |
| *Cyprinus carpio* | — | — | 644 411 | 644 411 |
| *Catostomus commersoni* | — | — | 200 | 200 |
| *Ictiobus* spp. | — | — | 114 849 | 114 849 |
| *Aplodinotus grunniens* | — | — | 65 | 65 |
| *Alosa sapidissima* | — | 46 009 595 | — | 46 009 595 |
| *Clupea* spp. | — | 4 851 000 | — | 4 851 000 |
| *Coregonus albus* and *C. clupeaformis* | 98 900 000 | 405 400 000 | — | 504 300 000 |
| *Leucichthys artedi* | — | 92 350 000 | — | 92 350 000 |
| *Onchorhynchus kisutch* | 1 948 280 | 21 204 230 | 2 756 062 | 25 908 572 |
| *Oncorhynchus tschawytscha* | 34 466 723 | 44 554 892 | 16 741 450 | 95 763 065 |
| *Oncorhynchus nerka* | 3 155 000 | 43 776 741 | 8 666 255 | 55 597 996 |
| *Oncorhynchus gorbuscha* | — | 11 758 500 | 479 037 | 12 237 537 |
| *Oncorhynchus keta* | — | 35 504 707 | — | 35 504 707 |
| *Salmo gairdneri* | 634 000 | 2 259 113 | 3 244 660 | 6 137 773 |
| *Salmo irideus* | 2 022 990 | 568 930 | 2 144 875 | 4 736 795 |
| *Salmo salar* | — | 1 804 313 | — | 1 804 313 |
| *Salmo sebago* | 291 000 | 310 042 | 140 015 | 741 057 |
| *Salmo trutta* | — | 58 430 | — | 58 430 |
| *Salmo henshawi* | 3 435 000 | 1 939 250 | 4 784 067 | 10 158 317 |
| *Salmo trutta levensis* | — | — | 48 000 | 48 000 |
| *Cristivomer namaycush* | 12 850 000 | 35 294 000 | 3 093 723 | 51 238 468 |
| *Salvelinus fontinalis* | 507 150 | 5 700 263 | 6 965 167 | 13 172 580 |
| *Osmerus mordax* | 14 500 000 | 6 900 000 | — | 21 400 000 |
| *Thymallus montanus* | 350 000 | 1 873 000 | — | 2 223 000 |
| *Pomoxis annularis* | — | — | 1 800 430 | 1 800 430 |
| *Pomoxis sparoides* | — | — | 470 | 470 |
| *Ambloplites rupestris* | — | — | 414 078 | 414 078 |
| *Micropterus dolomieu* | — | 653 170 | 81 177 | 734 347 |
| *Micropterus salmoides* | — | 758 300 | 1 431 850 | 2 190 150 |
| *Lepomis pallidus* | — | 135 000 | 2 799 766 | 2 934 766 |
| *Esox lucius* and *E. reticulatus* | — | — | 87 846 | 87 846 |
| *Stizostedion vitreum* | 326 350 000 | 282 820 000 | 383 | 609 170 383 |
| *Perca flavescens* | 19 000 000 | 195 267 000 | 104 287 | 214 371 287 |
| *Roccus lineatus* | — | 8 594 500 | — | 8 544 500 |
| *Morone americana* | 17 850 000 | 161 980 000 | — | 179 830 000 |
| *Roccus chrysops* | — | — | 2 825 | 2 825 |
| *Morone interrupta* | — | — | 420 | 420 |
| *Gadus callarias* | — | 260 133 000 | — | 260 133 000 |
| *Pollachius virens* | — | 500 730 000 | — | 500 730 000 |
| *Scomber scombrus* | — | 4 847 000 | — | 4 847 000 |
| *Melanogrammus æglifinus* | — | 26 814 000 | — | 26 814 000 |
| *Pseudopleuronectes americanus* | — | 1 294 156 000 | — | 1 294 156 000 |
| *Tautoga onitis* | — | 606 000 | — | 606 000 |
| *Homarus americanus* | — | 194 670 000 | 3 779 | 194 673 779 |
| Totals | 536 260 143 | 3 694 281 699 | 58 215 962 | 4 288 757 804 |

water fish excluding the nacreous shell fish (*Lampsilis ventricosa, L. ligamenta, L. luteola, L. recta, L. anodontoides, Plagiola securis, Quadrupla pustulosa*) and the American crayfish (*Homarus americanus*). Other species were captured during a flood in the basin of the Mississippi and replaced in their respective rivers after the flood had subsided.

The adjoining Table shown the amount of restocking actually accomplished. " Small fry " is used to designate newly born fish, and " small fish " are those about the size of a finger.

VARIOUS

1305 - **Feeding Experiments with Rabbits.** — DAVIES C. J., in *The Journal of the Board of Agriculture*, Vol. XXIII, No. 6, pp. 583-585, London, September 1916.

In order to obtain precise details of the relative merits of various concentrated foods, of the total amount of food consumed and of the cost of rearing, 8 rabbits of similar breed, belonging to two litters of about the same age, were experimentally fed for 6 weeks in the summer of 1916. The results of the experiments are given in Tables I and II.

TABLE I. — *Daily ration of each pair of rabbits.*

| | Age of rabbits in weeks | | | | | |
|---|---|---|---|---|---|---|
| | 1 | 2 | 3 | 4 | 5 | 6 |
| | oz. | oz. | oz. | oz. | oz. | oz. |
| Concentrated food | 1 | 1 | 1 | 1.5 | 2 | 2 |
| Clover hay | 1 | 1 | 1 | 1 | 1 | 1 |
| Green stuff | 10 | 14 | 16 | 16 | 16 | 16 |

TABLE II. — *Cost of concentrated food and live weight increase.*

| Lot | Concentrated food | Content of: Protein | Content of: Oil | Cost of food per lb. (1) | Total cost of concentrated food per head | Average Liveweight increase per head |
|---|---|---|---|---|---|---|
| | | Per cent | Per cent | *d* | *d* | lb. oz. |
| 1 | Bran | 14 | 4 | 1 | 2 | 1 9 |
| 2 | Oats | 12 | 6 | 2 | 4 | 1 10 |
| 3 | Bran, 2 parts<br>Oat meal, 1 part<br>Dairy cake, 1 part | 18 | 6 | 1.5 | 3 | 1 10 |
| 4 | Dairy cake | 24 | 6 | 1.5 | 3 | 1 3 |

(1) Maximum prices for food bought locally in small quantities.

All rabbits received water to drink and a lump of rock salt to lick, also a daily allowance of clover hay and freshly cut green stuff. The pair fed on dairy cake (Lot 4) gave poor results which were due partly to the

fact that one rabbit disliked it and seldom ate her share. At the end of of the experiment Lot 3 carried the most flesh and the mixture they received was used successfully throughout the year, giving support to the view that a mixture of foods is better than single foods.

The experiments show that oats can be very well replaced by cheaper foods and that rabbits can be reared for the 6 weeks of their greatest growth in summer at a cost of ½*d* per week for concentrated food. Roughly speaking it was found that it took some 15 lbs. of food to produce 1 lb. increase live weight and this figure agrees very well with the observations made by the writer many years ago when it was estimated that each rabbit increased 1 lb. for every 12 lbs. of food consumed. During the 6 weeks experimental period each rabbit produced 9 to 10 lbs. of dry and liquid manure.

## FARM ENGINEERING.



1306 – **New Dressing Machine for Spherical Grain.** — *Illustrierte landwirtschaftli he Zeitung*, 36th Year, No. 64, pp. 429-430. Berlin, August 9, 1916.

In plate dressing machines of the usual type, seeds which are not perfectly round or those having flat surfaces on them, either stay on the plate or move along very slowly and leave it reluctantly. This causes seeds of inferior quality to fall into the hopper.

On the other hand, in the new machine described here, (made by ERNST LÖSCHE at Koenigsberg, Prussia; German Patent No. 292 667), a step device causes the seeds to make a kind of jump which allows them to roll and to leave the plate at the proper moment. Again, the fact that the external ring of the plate is adjustable, allows the individual characteristics of each kind of seed to be provided for and gives most efficient separation. Another novelty consists in the adjustability of the carrier platforms situated in the annular discharge channels. In this way the classification of the different kinds of grain can be varied at will. Finally the rousing shaft fixed in the feed channel is a very useful improvement; it keeps the grain in constant motion and prevents the formation of heaps. The friction rids the grain of husks, stalks, etc., while sand and other impurities are led to a sieve at the bottom of the feed channel and thus do not reach the dressing plates. Fig. 1 shows a complete view of the machine; fig. 2 a horizontal section at *A B*; fig. 3 a portion of the annular channel with the carrier platform *p* controlled through the window *O*; and fig. 4. is a vertical section of a dressing plate and feed channel, showing also the under side of a dressing plate with adjusting wing-nuts *t*; the position of the rousing shaft *h* is indicated together with its driving-bevel *e*.

As shown in fig. 1, the three pillars *a* of the frame function also as discharge channels and are connected by the cross-piece *h*. The frame carries the cylindrical feed channel *c* which at its upper end has a driving-bevel *e*, running on a ball-bearing *d*. From this bevel the dressing plates *f* are suspended by stay-bolts. The shaft *h* forms the axis of the bevel *e*. It is

*New dressing machine for spherical grain.*

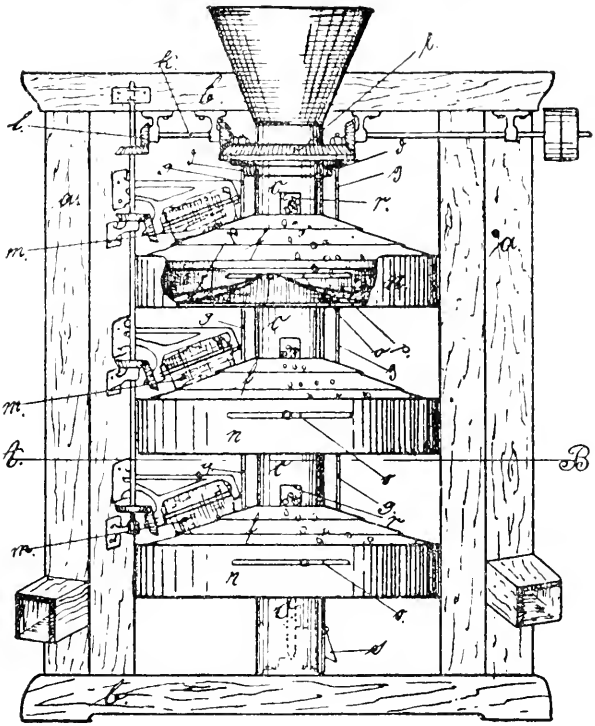

Fig. 1. Complete machine.

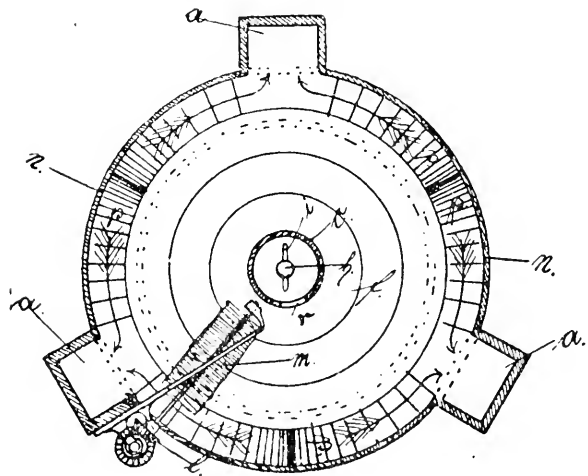

Fig. 2. Horizontal section at *A B*.

furnished with rousing fingers and the lower end runs on a step-bearing at the bottom of the feed-channel (as indicated in fig. 1). The bevel *e*, which is driven by any suitable power, drives a series of brushes *m* by means of the shaft *k* and the bevel-gears *l*. The pillars *a* are connected with the annular channels *n* in which the platforms *p* are situated. The latter are regulated through the slots *o* and carry the dressed grain in the pillars to the internal discharge channel.

*New dressing machine for spherical grain.*

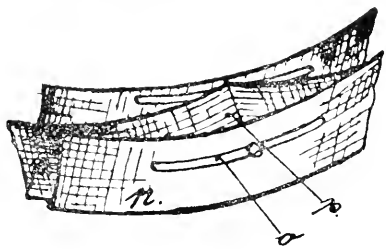

Fig. 3. — A portion of the annular channel with the carrier platform *p*, controlled through the window *o*.

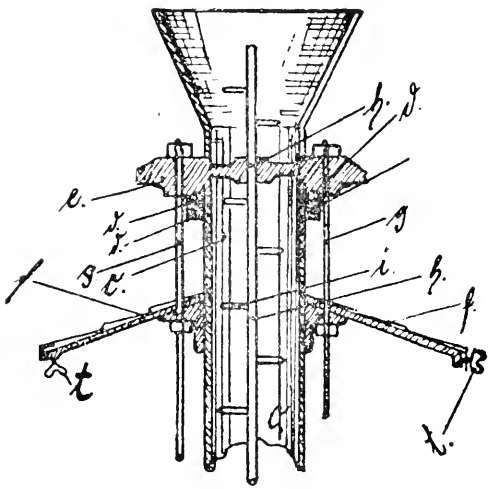

Fig. 4. — Vertical section of a dressing plate and feed channel.

*Mode of action.* — The dressing plates are put in motion by any suitable power. The grain to be dressed is introduced to the cylindrical feed channel *c* through a funnel or by similar means. Hence it passes to the plates by discharge orifices *r* under the influence of the rousing shaft *h*. The seeds roll over the dressing plates *t* which surround the channel *c* and

move quickly or slowly, according to their weight and shape, towards the channels *n* at the periphery of the plates. Perfectly round seeds roll quickly off the plate and reach the annular channel on the first carrier platform *p* and thence the first discharge channel. Seeds which are not round or those which are gnawed by worms roll slowly to the edge of the plate and only reach the second division of the annular channel passing out though the corresponding discharge orifice. Broken or damaged grain, husks, etc., slip rather than roll and only reach the third division and emerge by the last discharge opening. Debris (stalks, etc.), entangled in the grain, which is not carried to the sieve by the rousing shaft, is removed from the plates by the rotary brushes *m*.

1307 – **The Elbert Vaughan Portable Saw driven by Petrol Motor, for Tree Felling** (1). — *The Scientific American*, Vol. CXV, No. 11, p. 264. New York, September 1916.

The Elbert Vaughan portable saw is driven by a 3.5 HP, two-stroke petrol motor. The total weight of the machine is about 220 lbs. As shown

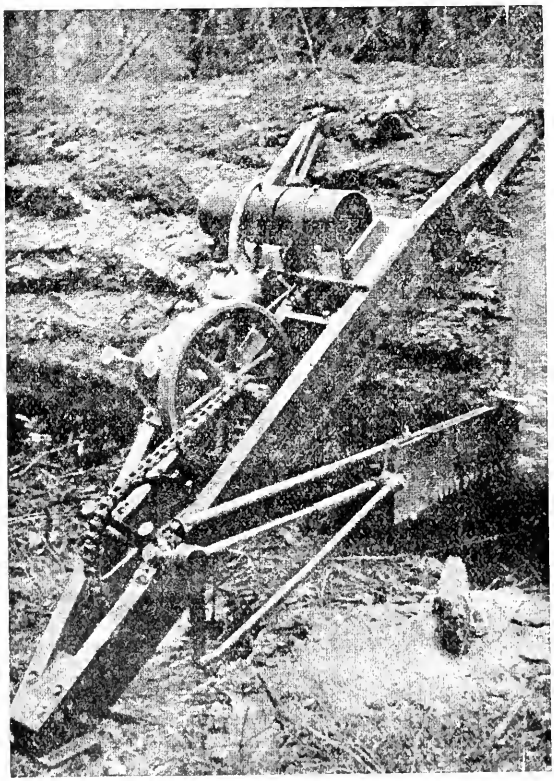

The Elbert Vaughan portable motor saw.

(1) See also *B.* May 1916, No. 550. (*Ed.*).

in the attached figure, the saw is mounted on a V-shaped frame of which the lower end rests on the ground while two clamps fix it solidly to the tree to be sawn. When a cut is finished the machine can be shifted by two men to the place where the next cut is to be made.

As an example of the work done by this portable saw in 10 hours, the writer gives :

| | | |
|---|---|---|
| *Maximum* . . . . . | 35 cords (4480 cub. ft.) | of wood in billets of 4 feet. |
| *Minimum* . . . . . | 15 cords (1907 cub. ft.) | » » » |
| *Averag* . . . . . | 20 cords (2546 cub. ft.) | » » » |

1308 – **Lorry for Transporting Timber in Long Lengths.** — *The Implements and Machinery Review*, Vol. 42, No. 498, p. 663. London, 1916.

The Yorkshire Commercial Motor Company of Leeds has built a lorry carrying 6 tons of wood in lengths up to 45 feet. Ordinary vehicles do not allow of the carriage of long pieces because of the limited platforms of the lorries and also on account of the unequal distribution of weight. To avoid

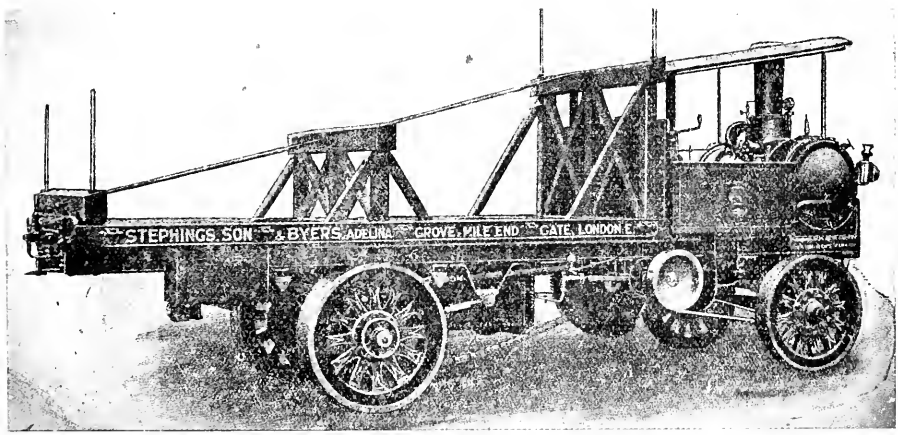


Lorry for transporting timber in long lengths.

these disadvantages the above company has fitted the chassis with two trestles of different heights ; the rear trestle is lower than the forward trestle and is fixed to the frame directly over the back axle ; the forward trestle is fitted just behind the motor. The respective height of the two trestles allow pieces to be sloped conveniently. This arrangement together with the well proportioned design, distributes the weight uniformly on the bearing points of the vehicle. Another advantage of this lorry is the relatively long platform compared with the space occupied by the steam generator and the machinery. The latter is of simple type, with large bearing surfaces, and is very well balanced. The generator and fire-box are of such dimensions that the tubes are always covered with water whatever the angle of tilt assumed by the lorry.

1309 – **"Silicate Cotton" as Insulating Material for Boilers and Refrigerators.**—SCOTT JAMES, in *Ice and Cold Storage*, Vol. XIX, No. 221, pp. 103-104, 3 figures. London, August, 1916.

The writer criticises the name "silicate cotton", as unsuitable, since the substance does not contain any cotton, and suggests "silicate fibre" as a substitute. It consists actually of a silicate, or rather of a mixture of calcium silicate with silicates of other bases. The material is prepared from blast furnace slag, more especially from the semi-transparent portion, of a vitreous nature, and does not undergo any change on exposure to the air under ordinary conditions.

The slag is melted and a jet of steam blown through which divides the mass into an infinite number of small particles, of different shapes, containing air bubbles. One cubic foot of slag forms 12 cubic feet of silicate, which thus includes 11 cubic feet of air.

Besides being used for floorings as a noise absorbing agent, this material is employed for boiler laggings. It is now coming into use as an insulator for cold storage purposes as it has the advantage of being absolutely incombustible and non-fermentable, while from the thermal point of view, it is one of the worst conductors known.

1310 – **Review of Patents.**

*Tillage Implements.*

| | | |
|---|---|---|
| Austria | 72 056 | Cultivator. |
| | 72 058 | Motor plough. |
| Canada | 168 704 | Hoe and cultivator combined. |
| | 169 032 | Multi-furrow plough. |
| | 169 107 | Drain plough. |
| | 169 195 | Tractor plough. |
| | 169 269 | Share-lift. |
| | 169 364 | Roller coupled to plough. |
| | 169 372 | Harrow. |
| | 169 593 | Hoe. |
| | 169 852 | Method of fixing cultivator discs. |
| Germany | 292 096 | Method of fixing the share to the frame, easily detached, especially for tractor ploughs. |
| | 292 129 | Spring connection for share of motor plough. |
| | 292 130 | Cultivator with rotating knives, with axis of rotation parallel with the line of work. |
| | 292 181 | Cultivator with vertical knife-bearing drums. |
| | 292 411 | Grips for motor plough and other wheels, with pieces situated on the plane of the axle. |
| | 292 412 | Chassis for reversible plough, working on the balance-plough principle. |
| | 292 438 | Tractor plough. |
| | 292 439 | Motor plough with fixed shares, adjustable for height by means of a rack. |
| | 292 628 | Device for fixing and unfixing ploughs coupled to the tractor chassis by means of a draw-bar. |
| | 292 629 | Plough furnished with frame detachable at side for tractor work. |

| | | |
|---|---|---|
| | 292 932 | Disc-harrow with articulated axles |
| | 292 975 | Motor plough of driven disc type. |
| | 293 243 | Motor plough with frame adjustable as regards height by mechanical power. |
| | 293 408 | Mole-plough. |
| Holland | 1 590 | Cultivator with rotating toothed drum. |
| Italy | 153 252 | Transverse connection for fore carriage. |
| | 154 008 | Motor plough with driver rotary blades. |
| | 154 177 | Motor plough for special soils. |
| | 154 305 | Improvements in ploughs. |
| United States | 1 188 032 — 1 188 091 — 188 412 — 1 188 696. — 1 188 727 | Cultivators. |
| | 1 189 332 — 1 189 890 | Harrow. |
| | 1 189 365 | Wheel plough. |
| | 1 191 404 | Spiral harrow. |
| | 1 191 685 | Plough coulter. |
| | 1 191 850 | Attachment for cultivator. |
| | 1 194 087 | Ploughing machine with rotating cylinder. |
| | 1 194 166 | Plough. |

*Drainage and irrigation.*

| | | |
|---|---|---|
| Germany | 292 155 | Automatic device for sprinkling and irrigating with tipping receivers to control the valves. |

*Fertilizers.*

| | | |
|---|---|---|
| Canada | 169 161 — 169 162 — 169 163 | Process for fixing nitrogen. |
| | 169 491 | Process for calcium cyanamide manufacture. |
| Germany | 291 227 | Process and device for spreading fertilizers. |
| | 292 440 | Agitator and pump for liquid manure driven by electric motor. |

*Sowing and planting machines.*

| | | |
|---|---|---|
| Austria | 71 906 | Drill with distributor discs inside the hopper. |
| Canada | 170 148 | Drill. |
| Germany | 290 920 | Garden drill. |
| Italy | 153 484 | Drill and manure spreader. |
| United States | 1 189 019 | Drill for Maize. |

*Plant diseases: prevention and remedies.*

| | | |
|---|---|---|
| Austria | 70 878 | Method of protecting coniferous and other trees from rodents. |
| Germany | 290 611 | Process for making insecticide. |
| | 291 810 | Device for guarding vineyards and orchards against hail storms, |
| | 292 270 | Insecticide. |
| Italy | 153 302 | Insecticide for spraying. |
| | 153 525 | Improvement in continuous jet sprayers. |
| | 153 761 | New improved sprayer for blight and insects. |

*Harvesting and haymaking machinery.*

| | | |
|---|---|---|
| Austria | 70 085 | System for converting mower to binder. |
| | 70 512 | Reaper. |
| | 70 656 | Reverse mechanism for driving-wheel of binder. |

| | | |
|---|---|---|
| Canada | 169 397 | Rake. |
| | 169 497 | Sheaf-maker. |
| | 170 404 | Binder. |
| Denmark | 21 364 | Lawn mower. |
| | 21 398 | Self-binder. |
| Germany | 291 682 | Guard for mower running behind or at side of machine. |
| | 291 699 | Device for recovering grain and seed from self-binders |
| | 291 715 | Knot for balers, binders, etc. |
| | 291 825 | Machine for making cocks. |
| United Kingdom | 6 768 | Reaper. |
| | 8 242 | Horse rake. |
| United States | 1 191 385 | Gear for coupling hay rake to lift. |
| | 1 194 788 | Teeth for hay rake. |
| | 1 195 320 | Maize binder. |

*Machines for harvesting root crops.*

| | | |
|---|---|---|
| Austria | 71 879 | Potato digger. |
| | 71 902 | Beet puller. |
| Canada | 169 839 | Potato digger. |
| France | 480 359 | Potato digger. |
| Germany | 291 688 | Device for raising the tines of potato digger. |
| | 291 706 | Seat for 2-wheeled potato digger. |
| | 291 714 | Topping machine for beets. |
| | 292 372 | Potato digger with projecting forks. |
| | 94 473 | Beet-puller fitted with endless belt transporter. |
| | 292 740 | Wheel with forks for potato digger. |

*Winnowing and threshing machines.*

| | | |
|---|---|---|
| Canada | 169 215 — 169 559 | Threshing machine. |
| | 169 253 | Mechanism for threshing machine. |
| Italy | 153 981 | Improvement in machine for separating grain coated with mucilage from grain not so coated. |

*Transport, dressing and storage of crops.*

| | | |
|---|---|---|
| Canada | 168 597 | Silage chopper. |
| | 169 813 | Hay lift. |
| Germany | 292 442 | Mechanism for clutching and de-clutching the feed of straw-balers. (1) |
| | 293 105 | Binding device for straw-baler. |
| Italy | 153 897 | Fodder trussing machine. |
| United Kingdom | 5 894 | Hay lift. |
| United States | 1 191 165 | Maize lift. |
| | 1 192 056 — 1 192 307 — 1 194 179 | Hay lifts. |

*Steering and traction of farm machinery.*

| | | |
|---|---|---|
| Canada | 168 223 — 168 224 — 168 439 | Tractors. |
| Italy | 154 049 | Anti-skid device for tractor for difficult soils or heavy loads. |

(1) See *B.* November 1916, N°. 1200. (*F. d. N.*)

| | | |
|---|---|---|
| United States | 1 191 333 | Tractor motor. |
| | 1 191 858 — 1 192 423 | Tractors. |
| | 1 193 776 | Plough tractor. |

*Feeding of stock.*

| | | |
|---|---|---|
| Austria | 72 015 | Feeding machine. |
| Germany | 293 106 | Feeding tray for fitting over manger. |

*Apiculture.*

| | | |
|---|---|---|
| Italy | 154 157 | Improved hive. |

*Manufacture of vegetable products.*

| | | |
|---|---|---|
| Austria | 70 902 | Kneading machine. |
| Canada | 169 334 | Flax dressing. |
| | 169 446 | Desiccator for food cakes. |
| | 169 545 | Cereal food in strip form. |
| Italy | 153 952 | Desiccator for grain, seed and flint. |

*Dairy industry.*

| | | |
|---|---|---|
| Austria | 69 998 | Draw-off tap for milking machine. |
| | 71 109 | Churn mechanism. |
| Canada | 169 284 | Pulsator for milking machine. |
| | 169 285 | Can-filling machine. |
| | 170 146 | Milk filter. |
| | 170 425 | Fat separator for creamery. |

*Miscellaneous.*

| | | |
|---|---|---|
| Austria | 70 255 | Meat chopper. |
| | 70 803 | Country stove. |
| | 70 815 | Trocar. |

**1311 – Method of Housing Stock in Pens without Divisions in Use in Ohio, U. S. A.** — HYSLOP G. L., in *Hoard's Dairyman*, Vol. LII, No. 6, p. 165, fig. Fort Atkinson, Wisc., September 1, 1916. FARM BUILDINGS

As shown in the accompanying figure, the stock building is divided into three parts: the cattle pens occupy the ends, while the silos, boxes, horse stables and a shed for fattening poultry are in the centre. The pens at each end form four compartments separated by the feeding passage, 4 feet wide, which also serves as a manger and is fitted with an overhead travelling skip for carrying the food. This skip, 3.7 × 4.2 feet in size, can carry from 1000 to 1200 lbs. of ensilage.

Barriers, moved by a lever, control the animals during feeding. The use of the feeding passages as mangers saves a space of 4 feet throughout the building that would normally be occupied by mangers. Feeding is thus more convenient and there is less waste.

The cattle pens measure 42 × 13 ft. without the feeding passage; the latter occupies 40 sq. ft. per animal. Each pen holds 13 cows (there is room for 16) or 16 bullocks. The floor of the pens and passages is of concrete. The platform on which the beasts stand when controlled by the bar-

riers is raised 6 inches above the floor level. Each pen receives 150 lbs. of straw daily, and when the manure is 1 foot deep, another 100 lbs. of straw is added. The bullocks receive their litter once, the cows twice a day, for the second time at the evening milking. The writer states that with this

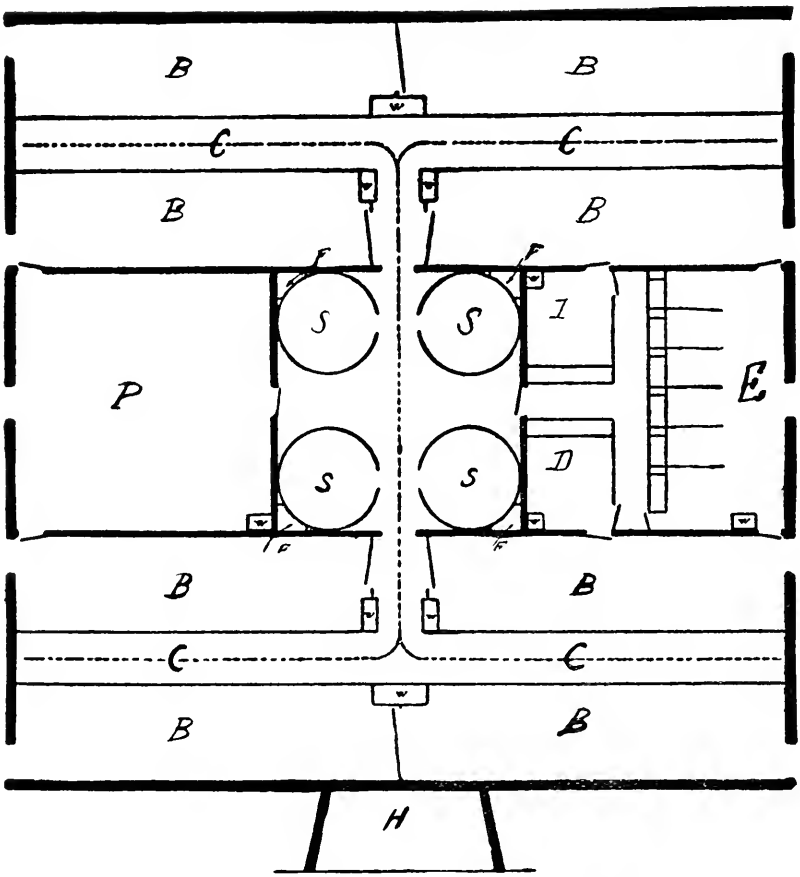


Plan of stock buildings with open pens at "West View Farm", Ohio.

B = Cattle
C = Feeding passage
D = Box stall
S = Silo
P = Fattening Crates for Chickens
W = Water
E = Horse Stalls
F = Ventilating Flue

system of housing there is less nuisance from milk than otherwise, and the animals are more comfortable. There is less labour for the men and the animals are quieter.

The 8 pens require 54 to 64 tons of straw for 6 months. The only

objection is the large amount of straw used, but the writer proposes to mix dry soil with the straw and intends to experiment with this next year.

The ventilation is on the " King " system which is according to the writer, most suitable for this kind of building.

## RURAL ECONOMICS.

1312 – **The Possibilities of Increased Crop Production.** — RUSSELL E. J., in *The Journal of the Board of Agriculture*, Vol. XXIII, No. 6, pp. 555-560. London, September 1916.

In his presidential address on 6th September, at Newcastle, to the Agricultural Section of the British Association, Dr. E. J. RUSSELL took as his subject the possibilities and prospects of increased crop production.

In the development of agricultural methods in England the three great lines of progress have been: *a*) the introduction, usually from Flanders, of crops that had not previously been grown on British farms, *b*) the removal of obstacles which prevented crops from making as full growth as they might, and *c*) the introduction of new methods for increasing the growth of the plant. The body of the address was devoted to a consideration of the means of *i*) increasing the yields per acre, and *ii*) reducing the cost per acre and increasing the certainty of production.

*Increased yields per acre.* The main obstacles to increased plant-growth lie in the climate and in the soil. Climate apparently cannot be altered; therefore crops and varieties suited to conditions must be grown. Soil can be altered, and it is possible to do a good deal in the way of changing it to suit the crops that are wanted. Light soils, clays and loams were each considered by Dr. Russell.

On *light* soil the two great obstacles to be overcome are the lack of water and the poverty in plant nutrients. The problem can be dealt with by increasing the depth of soil through which the roots can range, or by adding the necessary colloidal substances, clay, marl, or organic matter. The addition of organic matter must generally be accompanied by the addition of lime or limestone and all the plant nutrients — nitrogen, potash and phosphates — as well as by constant cultivation to keep down weeds and retain soil moisture. When all this is done, light soils become very productive; but on account of the costs of the above processes, crops must be grown which bring in a high money return — potatoes, greens, peas, sugar-beet, or two crops in a season. The best hope for improvement of light soil lies in increasing the number of money-finding crops, improving the methods of growing them and the relation to the other crops, or the live stock, and improving the organization for disposing of them, so that farmers will feel justified in spending the rather considerable sums of money without which these light soils cannot be successfully managed.

*Heavy land* can be improved by liming or chalking followed by drainage. Mole drainage promises to be an efficient and much cheaper substitute for the old system of draining, but co-ordination and a certain amount of con-

trol over the whole drainage area is needed, it being undesirable that a great fundamental improvement should be at the mercy of individuals.

The cultivation of clay land is always risky however, as it is suited only to a limited number of crops, and is difficult to cultivate, and hence most men lay down this land to permanent grass. This risk can be reduced:

*a*) by quicker ploughing in autumn so as to bring the work well forward; this seems only possible by the use of the motor plough. Dr. Russell believes that motor ploughs and cultivating implements will play a considerable part in the improvement of heavy land;

*b*) by keeping up the supplies of organic matter in the soil; the simplest plan seems to be the adoption of the North Country system, in which the land is alternately in grass and in tillage. Dr. Russell thinks that demonstrations on such lines, in heavy land districts, would resolve many of the farmers' doubts as to the advisabilty of breaking up some of their grass land.

*Loams* present no special dfficulties. The crop may be hampered by lack of root room, in which case periodical deep ploughing or subsoiling may bring about a substantial improvement; subsoiling at Rothamsted at a cost of about £ 1 per acre was followed by an increased yield per acre of 10 cwt. of potatoes worth 35 s.

All the above soils can next be further improved by proper treatment with fertilisers. Dr. Russell anticipates considerable improvements from a closer co-ordination of crop variety and soil and climatic conditions.

*Reduction of Cost per Acre and Increase of Certainty of Production.* One of the most hopeful ways of attacking this problem is to increase the efficiency of the manurial treatment; the whole of the fertilising constituents applied to the soil are never recovered in the crops but by arranging a proper rotation, and by using a poperly balanced manure the loss can be much reduced. As regards this latter point Dr. Russell pleads for agreement between the county authorities as to a uniform scheme in their manurial experiments. Economy is also possible in the management of farmyard manure, the production of which is estimated at 37 million tons annually, valued at £ 9 250 000, compared with an annual consumption of £ 6 500 000 worth of artificials.

Further saving is possible in the soil itself; where there is no crop there is a loss of valuable nitrates over the winter, the heaviest loss occurring on the best manured land. This emphasises the need for spring dressings of quick-acting nitrogenous manures, and accounts for the marked improvements that set in on many soils when spring dressings are given. A good way of getting round the difficulty is to sow a catch crop in autumn and either to plough it in before the main crop is sown, or to feed it to stock whichever is more convenient. Leaving arable land in grass for a few years the gain in nitrogen, during this period, may balance the loss during the arable period; this is already done in several rotations, but it suffers from the disadvantage that the land during its recuperative grass period is producing less than during the arable period. Dr. Russell next dealt with the improvement possible in cul-

tivation, which will result from the use of the motor plough, or tractor, and alluded finally to economy in the choice of crops.

The need for accounts was emphasised, as enabling unprofitable crops to be replaced by profitable. *Swedes* e. g. are invariably grown at a loss at Rothamsted and Dr. Russell believes this would be found not uncommon in the south of England. The survey of the methods of increasing crop production was concluded by a reference to the need to raise by educational methods, the ordinary farmer to the level of the good one, to the need for extending the area of land under cultivation, by the reclamation of wastes, and to the need for the substitution of arable for grass.

Lastly, there is a factor which operates against increased crop production which Dr. Russell thinks it unreasonable to hope to see entirely abolished, and that is that a farmer has to get his pleasure out of the countryside, as well as find his work in it, so that trees, hedges and copses are left, pheasants bred, foxes and hares preserved and rabbits spared.

" When we know more about the soil, the animal, the plant, etc, we shall be able to increase our crop-yields ", says Dr Russell, " but we shall lose the best of our work if we put the crop-yield first. Our aim should be to gain knowledge that will form the basis of a true rural education, so that we may train up a race of men and woman who are alive to the beauties and the manifold interests of the countryside, and who can find there the satisfaction of their intellectual as well as their material wants. If we can succeed in that, we shall hear far less of rural depopulation; instead we may hope for the extension of that type of keen healthy countryman, which has always been found among the squires, farmers, and laborers of this country, and which we believe was already increasing before the War. With such men and women we can look forward with full confidence to the future.

1313 – **Comparative Results obtained on an Estate in Tuscany where a Farm Worked by the Landlord was Afterwards Run on the Metayage System.** — BRINI F., in *L'Agricoltura Italiana*, Year XLIII, pp. 100-104. Pisa, July-August 1916.

The Magognana farm at Poggibonsi, Tuscany is a holding of 10.87 hectares (27 acres) (1) of which 1.27 hectares is occupied by buildings, roads, etc., and 1.2 hectares by vineyards, leaving an area of 8.6 hectares for the arable fields. The holding used to be farmed on the landlord's account and under that management it was worked on a 9-years rotation, but when later the land was transferred to a metayer, a 4-course rotation was adopted at the same time.

The two rotations and the net returns per hectare under both systems are given below.

(1) 1 hectare = 2.47 acres.

I. *When under landlord*:

| | | Lire |
|---|---|---|
| 1st year: | Maize with bean | 32 |
| 2nd " | Wheat with clover seeds | 61 |
| 3rd " | Clover | 116 |
| 4th " | Wheat | 61 |
| 5th " | Beans | 73 |
| 6th " | Wheat with lucerne or sainfoin | 61 |
| 7th " | Lucerne or sainfoin | 103 |
| 8th " | " " " | 150 |
| 9th " | Wheat, stubble grazed in autumn | 61 |
| | Total | 718 |

* net return per hectare per annum 80 lire.

II. *When under metayage*:

| | Total net returns | Landlord's share | Metayer's share |
|---|---|---|---|
| | Lire | Lire | Lire |
| 1st year: Maize with beans and grazing previous autumn | 249 | 185 | 64 |
| 2nd " Wheat with clover seeds | 131 | 60 | 71 |
| 3rs " Clover | 162 | 38 | 124 |
| 4th " Wheat | 131 | 60 | 71 |
| One fifth of total area always kept on lucerne | 453 | 208 | 245 |
| Total | 1126 | 551 | 575 |
| * net return per hectare per annum | 225 | 110 | 115 |

*Difference between two systems*:

| | Total net returns | Landlord's share | Metayer's share |
|---|---|---|---|
| Per hectare: | Lire | Lire | Lire |
| under system II | 225 | 110 | 115 |
| " " I | 80 | 80 | — |
| Difference | 145 | 30 | 115 |
| On the whole farm (8.6 hectares): | | | |
| under system II | 1937 | 938 | 990 |
| " " I | 686 | 686 | — |
| Difference | 1251 | 252 | 990 |

No similar comparison can be drawn with regard to the returns from the vineyard, as the vines were newly planted and the conditions therefore not comparable in the two periods. But according to observations made in other vineyards worked first under the one system and then under the other, it is probable that the yield of wine was increased by between 2 and 3 quintals by the more careful management of the metayer who has a more personal interest in the welfare of the vines than the day labourer. Even by valuing the increased returns as low as 50 lire per hectare, the net returns of the holding amount to 2000 lire per annum or to 1313 lire more than when it was run on the landlord's account.

1314 – **Metayage on an Umbrian Estate (Italy).** — PAPI C., in *L'Italia Agricola*, Year, 53, No. 8, pp. 353-363. Piacenza, August, 15, 1916.

On the Casalina Estate belonging to the Perugia Agricultural Institute a study was made of labour in its relation to different classes of land. The estate is situated in the Middle Valley of the Tiber, between Perugia and Todi, and covers an area of 1557 hectares (1) made up of :

750 hectares of drift or alluvial soils in the valley (loams)
700 " " sedimentary soils on the hillsides (clay or pebbly sand)
105 " " sedimentary soils on the mountain side (shingle).

Considering the estate from the point of view of cropping it may be divided into :

896 hectares of arable land planted with rows of plane trees and vines every 25 to 30 metres ; situated on the flat or on gentle slopes where mowing and reaping machinery can well be used ; divided into 36 holdings of 18 to 40 hectares each, held by metayers.
255 " of arable land planted in vines and olives on the hillsides where horse tillage can be employed but where harvesting machinery cannot be used ; divided into 19 holdings of 10 to 18 hectares each and one holding of 37 hectares all held by metayers.
13 " of special crops (vines, olives, mulberries, nurseries) partly cultivated by the estate and partly worked on a system of metayage with the metayers of the other parts of the estate or with labourers from the town of Casalina
30 " of permanent grass and of poplar and willow plantations.
363 " of oak and cherry woods on the hillsides and mountains. All forestry work is undertaken by the estate whilst the grazings are in the hands of metayers.

On all the arable hand, it is estimated that the permanent crop (*i. e.* vines, olives, etc.) occupies one fifth of the area and that the rest is divided equally between corn and forage crops. Table I gives the value of the average production per hectare of both crops and stock during the three years 1912-1914.

The returns are very low when compared with those obtained on the best farms of Central Italy, but in order to develop the estate properly it will be necessary to regulate the course of the Tiber which at present does considerable damage to the low-lying land. On the hillsides, noticeable improvements have already been carried out though high yields can never be expected owing to the nature of the soil. The profits on live stock are higher in the hill zone than on the low ground chiefly because in the former no account is taken of the grazing provided by the woods. In Table II is set out the head of live stock and its distribution between high and lowland holdings.

At Casalina, the system of metayage in force is a good example of the old custom of partnership with equal shares : the land, buildings, live and dead stock belong to the landlord ; the smaller implements are mostly pro-

(1) 1 hectare = 2.47 acres.

TABLE I. — *Value per hectare of produce from crops and stock*, 1912-1914.

| | 1912 | 1913 | 1914 | Mean |
|---|---|---|---|---|
| | Lire (1) | Lire | Lire | Lire |
| *Lowland zone* (896 *hectares*) : | | | | |
| Value of field crops not consumed on the holding | 250 | 220 | 216 | 229 |
| Value of crops from plantations (almost entirely vines) | 59 | 38 | 57 | 50 |
| Net profits on live stock | 36 | 46 | 72 | 51 |
| *Hill zone* (255 *hectares*) : | | | | |
| Value of field crops | 147 | 133 | 140 | 140 |
| Value of crops from plantations (vines and olives trees) | 83 | 60 | 59 | 67 |
| Net profits on live stock | 79 | 59 | 99 | 77 |

(1) 1 lire = 9 ½*d*.

vided by the tenant ; all produce from field crops or trees and all losses or gains on the live stock are divided equally between landlord and tenant ; all expenditure on seeds, manures, fungicides, live stock taxes, insurance, veterinary fees, blacksmith, are also divided equally between the landlord and tenant ; the land tax is paid by the landlord and the income tax by the tenant ; the house and garden are the exclusive property of the tenant and so are the poultry, but the landlord makes some fixed rent charge for the latter. Such a system as this with slight modifications is adopted throughout Umbria.

Table III summarises the date dealing with the metayers and their families on the Casalina estate and distinguishes between the workers and, the consumers according to the classification suggested by FAINA (1). In Table IV the supplementary casual labour employed by the metayers during the years 1912-1914 is given. For the corn harvest, which is the work requiring most labour, it has been estimated that in normal times an additional 1960 men-days and 600 women-days are necessary, or assuming that the harvest lasts 12 days, an extra 163 men and 50 women would be employed on the land.

In calculating the proportion of workers in the metayer families, women, old men and children are assigned values varying from 3 tenths to 6

(1) Cf. *Nuova Antologia*, May 16, 1915 : Earnings and food consumption of metayers. Investigations on the earnings and food consumption of the metayers at Casalina have been made by the students of the Perugia Agricultural Institute.

TABLE II. — *Live stock on the estate, December* 31, 1914.

| | Mean live weight per head | Total head | Total live weight | Total head per hectare | Total live weight per hectare |
|---|---|---|---|---|---|
| | Quintals (2) | | Quintals | | Quintals |
| *Lowland zone* (36 *farms*): | | | | | |
| Bulls | 10 | 4 | 40 | | |
| Bullocks (working) | 9 | 110 | 990 | | |
| Cows | 7 | 93 | 651 | 0.3 | 2.3 |
| Calves | 1 | 32 | 32 | | |
| Yearling cattle | 5,5 | 69 | 380 | | |
| Mares | 5,5 | 40 | 220 | | |
| Foals | 3 | 43 | 129 | 0.1 | 0.4 |
| Asses | 2 | 2 | 4 | | |
| Pigs | — | 454 | — | 0.5 | — |
| Sheep | — | 138 | — | 0.2 | — |
| *Hill zone* (20 *farm*): | | | | | |
| Bullocks (working) | 8 | 48 | 384 | | |
| Cows | 6 | 10 | 60 | 0.3 | 2.0 |
| Calves | 1 | 4 | 4 | | |
| Yearling cattle | 5 | 14 | 70 | | |
| Mares | 5 | 9 | 45 | | |
| Foals | 3 | 14 | 42 | 0.1 | 0.4 |
| Asses | 2 | 3 | 6 | | |
| Pigs | — | 237 | — | 0.9 | — |
| Sheep | — | 211 | — | 0.8 | — |

(2) 1 quintal = 220.5 lbs.

tenths of the normal man-day. The writer points out that the chief characteristic of the system of metayage is its remarkable elasticity with regard to supplying labour. For instance at the present time when 20 per cent of the men are away, the harvest was nevertheless carried out by the families of the metayers with the help of only an additional 80 people from the town of Casalina. This fact has suggested the possibility that up to the present the labour of the metayers and their families has not been used to the best advantage. That the subdivision of holdings — a process with which the growth of intensive farming was thought to be intimately connected owing to the consequent increase of labour in the form of metayage — may not be an economical procedure beyond a certain point, partly because it means

TABLE III. — *Composition of the metayer families.*

| | | Whole estate | Lowland zone | Hill zone |
|---|---|---|---|---|
| Total number of families | | 56 | 36 | 20 |
| Total number of individuals | | 810 | 614 | 196 |
| Males | | 433 | 329 | 104 |
| Females | | 377 | 285 | 92 |
| Males under 10 years | | 314 | 243 | 71 |
| Females | | 260 | 191 | 69 |
| Workers | | 382 | 294 | 88 |
| Consumers | | 680 | 513 | 167 |
| Mean composition of one family | Males | 7.7 | 9.1 | 5.2 |
| | Females | 6.7 | 7.9 | 4.6 |
| | Workers | 6.8 | 8.2 | 4.4 |
| | Consumers | 12.2 | 14.3 | 8.4 |
| Per hectare of arable Land | Total number of individuals | 0.7 | 0.7 | 0.7 |
| | Workers | 0.3 | 0.3 | 0.3 |
| | Consumers | 0.6 | 0.6 | 0.6 |
| Number of individuals absent temporarily | | 92 | 70 | 22 |

TABLE IV. — *Casual labour employed by metayers, average of three years* (1912-1914).

| | | Men | Women |
|---|---|---|---|
| | | days | days |
| May | | 770 | 170 |
| June | | 930 | 210 |
| July | | 1 700 | 370 |
| August | | 395 | 88 |
| September | | 230 | 52 |
| October | | 700 | 150 |
| November | | 70 | 20 |
| | | 4 795 | 1 060 |
| Average per hectare over whole period | lowland zone | 4.4 | 0.9 |
| | hill zone | 3.3 | 1.0 |

the sinking of capital and partly because it raises the price of labour and limits the use of farm machinery. It would appear that the best results might be obtained by a combination of metayage and casual labour, where the holdings are large enough and remunerative enough to employ a certain amount of outside labour for which a fair price could be paid.

1315 – **Government Share-Farming Experiment in New South Wales,** in *The North British Agriculturist*; Vol. LXVIII, No 38, pp. 579. Edinburgh, September 21st 1916.

The Government of New South Wales has just entered upon an experiment in share-farming on the Forest Vale Estate of 20.000 acres between Wyalong and Lake Cudgehico. The homestead block of 1500 acres is to be used as an experimental farm, under the control of the Department of Agriculture. The balance of the area has been subdivided into twenty farms of about 800 acres each, which it is intended to apportion out, on the new system between as many applicants should as many as twenty be forth coming.

The farms, although meant to be run on a profit-sharing basis, will be kept strictly under control as regards methods of working. Thus of the 800 acres, 500 acres must be used for cultivation purposes the remainder being devoted to grazing. Again of the 500 arable acres, 250 must be sown each year and 250 acres fallowed. Ten acres must be ploughed and planted for afforestation purposes. Sheep should be run on each block, and assistance may be given regarding the purchase of these sheep The share-farmer is to find his own equipment for putting in and taking off the crop, to find his share of the bags aud to pay for his share of tke cartage. The share-farmer is to have two-thirds of the whole of the crop, whether cut for hay or stripped for grain. For the 550 acres (about) of grazing and fallowed laud the farmer will pay to the crown rental at the rate of 2 ½ per cent on the improved capital value. The Government's share will be one-third of the crop, and the Government will find its own share of the bags pay its share of the cartage and find the whole of the manure necessary for the cultivation area. Houses will be built for the settlers who will be consulted regarding details. The land will be cleared and fenced, and a store will be established. A saw-mill will be provided in a central situation, and about three-quarters of a million feet of timber will be cut on the property for houses, sheds etc. There are various other minor conditions, and it is provided that the whole will be embodied in a contract of lease between the parties and the Government. Applicants in applying for farms must state whether they are natural born or naturalised British subjects; whether married or single; the extent of practical farming experience already possessed; the amount of capital on hand, and other suchlike particulars.

1316 – **The Examination and Interpretation of Data in Investigations on Agricultural Economics.** — MARENGHI E., in *L'Eco degli ingenieri e periti agrimensori*, Year XX, Nos. 6 to 16, pp. 61, 76, 85, 97, 111, 122, 135, 160, 178, 181. Pescia, March to August 1916.

Many investigations in agricultural economics are based on data drawn from various sources and unless these are subjected to a critical examination

before being used, they can lead to very erroneous conclusions. The present paper deals solely with methods of testing data and with the means adopted for making them more reliable.

Data collected from different sources are not always comparable and in order to check such figures it is often possible to make use of calculated values drawn from a single secondary source For instance, in order to check the data on the production of forage crops in 27 districts of the Province of Rome (1), the unit consumption was worked out for each district (Table I) from the weight of live stock maintained and the amount of fodder required to feed a unit weight of live stock per annum, assuming that it takes 12 parts of hay or hay equivalents to maintain 1 part of live weight for 1 year. There is little agreement between the two sets of figures, showing that the returns for the forage crops, or for the live stock or for both were unreliable. Some sources of error there must always be even in the most careful records of this kind, but they should not be of an order to suppress all correlation between the two sets of returns. Assuming that the live stock returns are more likely to be correct than the forage returns, it follows that the latter should only be used with caution.

Another method of checking the reliability of data is based on the fact that there should be some sort of order connected with the chronological sequence. For example in Tables II and III, data are set out representing the production of olive trees and vines over the period of their growth, the data being collected by various investigators and in different parts of Italy. When plotted, the data give rise to very irregular curves which are a direct proof of errors in the returns, as except in cases where considerable modifications take place in the treatment of the plantations or where a disease appears, the average yield from such permanent crops should give a fairly smooth curve.

Ordinary statistical returns collected by the Government are often very imperfect. During the Enquiry into the conditions of the agricultural population in the south of Italy, it became apparent that the data on the numbers of metayers, farmers, etc., published in the population census were almost useless. A confusion had been caused by the bad wording of the schedules on which the returns were collected, the various classes of holders not being sufficiently well defined, so that under the group metayage were entered not only the various kinds of tenant parternerships, but also ordinary tenant farmers and other types of tenancies.

Besides testing the reliability of data, a critical examination often indicates a means of improving them and of smoothing out curves by the use of arithmetic, algebraic or graphic methods (2). By thus eliminating oscillations due to incidental causes the general trend of the phenomena under discussion is more clearly defined. The use of arithmetic methods is particularly adapted to chronological series where the irregularities are

(1) *Ministero di Agricoltura, Industria e Commercio, Ufficio di Statistica agraria, Catasto agrario del Regno d'Italia*, Vol. VI, No. 3, Part 2, pp. 11-65. Rome 1916.

(2) See *R.* 1914, No. 845.

TABLE I. — *Production of dry fodder per hectare in the Province of Rome.*

| | District | Production of dry fodder per hectare | | |
|---|---|---|---|---|
| | | From crop returns | Calculated from Live stock returns | Weight of livestock per hectare |
| | | Quintals | Quintals | Quintals |
| 1 | Volscian Hills | 7.60 | 7.92 | 0.66 |
| 2 | Lake of Bolsena | 5.20 | 8.40 | 0.70 |
| 3 | Bognorea Hills | 8.70 | 9.60 | 0.80 |
| 4 | Orte and Civitacastellana | 7,10 | 7.32 | 0.61 |
| 5 | Soracte | 6.20 | 10.68 | 0.89 |
| 6 | Viterbo | 5.70 | 6.72 | 0.56 |
| 7 | Cimini | 4.70 | 7.32 | 0.61 |
| 8 | Maremme (inland) | 6.40 | 9.60 | 0.80 |
| 9 | Vetralla | 5.20 | 8.28 | 0.69 |
| 10 | Maremme (coast) | 5.20 | 9.48 | 0.79 |
| 11 | Civitavecchia | 8.10 | 11.76 | 0.98 |
| 12 | Lake of Bracciano | 7.80 | 11.16 | 0.93 |
| 13-16 | Agro Romano (3 districts) | 15.80 | 12.96 | 1.08 |
| 17 | Anzio and Nettuno | 7.60 | 7.80 | 0.65 |
| 18 | Upper Valley of the Anio | 5.80 | 9.12 | 0.76 |
| 19 | Valley of the Tiber | 8.50 | 11.04 | 0.92 |
| 20 | Prenestina | 4.00 | 8.04 | 0.67 |
| 21 | Alban Hills | 4.70 | 11.88 | 0.99 |
| 22 | Simbruini Hills | 5.90 | 6.12 | 0.51 |
| 23 | Velletri and San Paliano | 4.50 | 13.92 | 1.16 |
| 24 | Val Sacco | 6.00 | 18.00 | 1.50 |
| 25 | Lepini Hills | 5.40 | 9.24 | 0.77 |
| 26 | Ausoni Hills | 6.40 | 11.16 | 0.93 |
| 27 | Pontine Marshes | 7.20 | 13.80 | 1.15 |

due not so much to the way the returns are collected as to incidental causes. In the series of figures dealing with the production of a vineyard during the early years of its life (series *A*, Table IV), there is some anomaly in the figures for the seventh to the tenth years. By using Wittstein's method of determining the means of 3 terms, the series *B* is obtained which is far more regular. Or by applying the algebraic method, *i. e.* interpolating a parabola of the second order according to the method of the least squares, the series *C* is obtained. The geometric or graphic method also gives good results. This method consists in representing the actual figures by a Cartesian diagram and in interpolating in it a curve which approaches the same series.

TABLE II. — *Production of vines (chronological series).*

| In rows, wide apart, on cultivated fields | | | | | | In vineyards | | | | | |
|---|---|---|---|---|---|---|---|---|---|---|---|
| Bologna district (CANEVAZZI) | | Central Italy (MONTI) | | Terra di lavoro (MUZII) | | Abruzzi (MUZII) | | Apulia (FLORES) | | Sicily (BRUTTINI) | |
| Age | Mean yield of grapes per 100 hills | Age | Mean yield of grapes per 100 hills | Age | Mean yield of grapes per 100 hills | Age | Mean yield of grapes per 100 hills | Age | Mean yield of grapes per 100 hills | Age | Mean yield of grapes per 100 hills |
| Years | Kgs. | Years | Kgs. | Years | Kgs. | Years | Kgs. | Years | Kgs. | Years | Kgs. |
| 0 to 10 | — | 0 to 16 | — | 0 to 6 | — | 0 to 5 | — | 0 to 3 | — | 0 to 4 | — |
| 11 » 20 | 150 | 17 » 30 | 1090 | 7 » 10 | 900 | 6 » 15 | 45 | 4 » 8 | 26 | 5 » 14 | 40 |
| 21 » 25 | 856 | 31 » 60 | 1500 | 11 » 15 | 2700 | 16 » 25 | 100 | 9 » 13 | 32 | 15 » 24 | 60 |
| 26 » 35 | 1612 | 61 » 70 | 1310 | 16 » 30 | 4500 | 26 » 35 | 35 | 14 » 28 | 49 | 25 » 34 | 65 |
| 36 » 55 | 2092 | 71 » 80 | 1010 | 31 » 35 | 3600 | 36 » 50 | 25 | 29 » 34 | 35 | 35 » 44 | 52 |
| 56 » 80 | 1660 | — | — | 36 » 42[1] | 1800 | — | — | 35 » 38 | 32 | 45 » 55 | 38 |
| — | — | — | — | 43 » 60 | 2700 | — | — | 38 » 40 | 25 | — | — |

(1) Old vines replaced by runners at 40 years with a consequent increase of production.

TABLE III. — *Production of olive trees (chronological series).*

| Pisani Hills (GUPPARI) | | Umbria (MONTI) | | Provincia of Bari (SOMMA) | | Territory of Gallipoli (MUZII) | |
|---|---|---|---|---|---|---|---|
| Age | Mean yield per tree | Age | Mean yield per tree | Age | Mean yield per tree | Age | Mean yield per tree |
| Years | Kgs. | Years | Kgs. | Years | Kgs. | Years | Kgs. |
| 0 to 10 . . | — | 0 to 12 | — | 0 to 14 | — | 0 to 12 | — |
| 11 » 16 . . | 0.67 | 13 » 30 | 0.46 | 15 » 20 | 0.56 | 13 | 3.63 |
| 17 » 21 . . | 0.78 | 31 » 50 | 0.87 | 21 » 30 | 1.27 | 15 | 4.32 |
| 22 » 26 . . | 0.95 | 51 » 200 | 1.13 | 31 » 40 | 2.40 | 21 | 6.40 |
| 27 » 31 . . | 1.11 | | | 41 » 50 | 2.50 | 25 | 7.78 |
| 32 » 36 . . | 1.33 | | | 51 » 60 | 3.90 | 31 | 10.03 |
| Above 36 . . | 1.44 | | | 61 » 70 | 4.80 | 35 | 11.41 |
| | | | | 71 » 80 | 5.55 | 41 | 13.65 |
| | | | | 81 » 90 | 5.85 | 45 | 15.04 |
| | | | | | | 51 | 17.29 |

The values of the ordinates corresponding to the theoretical curve are then determined according to scale.

Grouping data in fairly large classes is another method of obtaining satisfactory approximations. Returns for the regional production of wheat

TABLE IV. — *Data treated by the arithmetic and the algebraic methods production of a vineyard in quintals per hectare.*

| Age of vineyard in years | 5 | 6 | 7 | 8 | 9 | 10 | 11 |
|---|---|---|---|---|---|---|---|
| *A.* Figures actually recorded . . . | 7.50 | 8.15 | 7.90 | 9.00 | 9.65 | 9.40 | 10.30 |
| *B.* » treated arithmetically . | 7.50 | 7.85 | 8.35 | 8.85 | 9.35 | 9.78 | 10.30 |
| *C.* » » algebraically . | 6.86 | 7.44 | 8.10 | 8.84 | 9.16 | 10.66 | 11.54 |

TABLE V. — *Average earnings of metayers in Central Italy per "man unit" per annum.*

| Locality | Authority | No of estates studied | Earning per "man unit" per annum | | |
|---|---|---|---|---|---|
| | | | Maximum | Minimum | Mean |
| | | | Lire | Lire | Lire |
| Tuscany. . . . . | MAZZINI (1). . . . | 14 | 310 | 200 | 282 |
| » . . . . . | LINARI (2) . . . . | 51 | 479 | 139 | 256 |
| » . . . . . | BRUTTINI (3) . . . | 21 | 525 | 177 | 283 |
| Tuscany . . Val d'Elsa . . . | GUICCIARDINI (4) . | 31 | 641 | 356 | 485 |
| Tuscany . . Val d'Arno . . . | GUICCIARDINI (4) . | 19 | 642 | 360 | 489 |
| Tuscany . . Pistoian Hills . . | GUICCIARDINI (4) . | 18 | 539 | 320 | 396 |
| Umbria (S. Venanzio). 1913 . . | FAINA (5) . . . . | 9 | 639 | 123 | 336 |
| Umbria (S. Venanzio). 1914 . . | FAINA (5) . . . . | 9 | 605 | 142 | 348 |
| Umbria (Middle Tiber Valley) . | BINDOCCI (6) . . . | 52 | 771 | 131 | 407 |
| Marches (Pesaro) . . . . . | NICOLETTI (7). . . | 40 | 480 | 51 | 160 |

(1) *Atti della Giunta per l'Inchiesta Agraria*, Vol. III, No. 1, p. 470.
(2) *L'Agricoltura Italiana*, 1902, No. 12.
(3) *Bollettino della Società degli Agricoltori Italiani*, Aug. 31, 1905.
(4) *Nuova Antologia*, April 16, 1907.
(5) *Id.* March 16, 1905. — According to this authority: 1 adult man = 1 man unit, and 1 adult woman = $^{6}/_{10}$ man unit.
(6) "Il guadagno del mezzadro nella media Valle del Tevere". Perugia, 1916.
(7) *Bollettino dell'emigrazione*, 1909, No. 20.

in Italy (1909) proved satisfactory because the areas involved were large, but returns collected on the old method of small areas are open to criticism.

The homogeneity of data is a fair indication of their reliability and consequently has a marked influence on the correctess of the conclusions drawn from them. As an illustration of the necessity of a preliminary enquiry into the homogeneity of data before using them as terms of comparison, the

earnings of metayers in Central Italy are collected from various authorities and set out in Table V. If the object were to show the average earnings per man under the metayage system in different parts of Central Italy, the figures would not be comparable for in working out the available labour in each group and reducing to "men units", the factors employed were not constant. But if the object were merely to show the relationship between the earnings and the general fertility of the holdings the figures might be taken as comparable. The Table shows a very large range of variation in the earnings of metayers, for the metayage contracts tend to remain the same even in districts where yields differ markedly.

The homogeneity of the data must therefore be subordinated to the object in view. If, for instance, the yield of wheat per unit is being considered in countries which differ in regard to climate or other physical conditions, the data may be looked upon as homogeneous and therefore comparable if it is a question of showing that the phenomenon is a variable one. On the other hand the data will not be homogeneous if it is a question of appraising the values of the different systems of cultivation, for the yield does not only depend on the skill of the farmer but also on the general physical conditions of the surroundings.

Errors of judgment of the kind are frequently committed especially in dealing with questions of deforestation. The returns under a permanent system of forest management are compared whit those whichcould be obtained by farm crops, no account being taken of the fact that the latter may only be transitory and grown at the expense of the accumulated capital in the land. Other examples of the same kind are the comparison of the wealth of nations or individuals under different conditions of locality or time or the comparison of wages when the economic conditions are not the same, etc.

Passing on to the methods of classification, grading and comparison employed in the interpretation of data and to Galton's index of correlation it is pointed out that the statistical study of agricultural problems will only reveal gross influences at work, for any one mass of facts whatever its nature is connected with a number of others and expresses therefore the result of the action of an indefinite number of variable factors. The correlation was determined between the yields of lucerne and the rainfall (Table VI) from data collected by the Agricultural Institute at Perugia, According to the formula (1).

$$\text{Coefficient of correlation, } r = \frac{14803.60}{\sqrt{13584.33 \times 75240.40}} = 0.49.$$

or in other words, the yields of lucerne are largely controlled by the spring

(1) Coefficient of correlation, $r = \dfrac{\Sigma(xy)}{\sqrt{\Sigma(x^2)}\ \sqrt{\Sigma(y^2)}}$

where $x$ and $y$ are the mean deviations in each series when the deviations are static. In cases where they are dynamic the above deviations are replaced by the difference between each effective term and the corresponding term of the normal curve which is plotted by a special process of interpolation.

rainfall. Again LENOIR (1) has worked out the coefficient of correlation between the production and the price of wheat in France with the following results :

| | | | | | |
|---|---|---|---|---|---|
| From 1847 to 1870 | the coefficient | of correlation | was | . . . | 0.75 |
| " 1871 " 1885 | " | " | " | . . . | 0.56 |
| " 1885 " 1905 | " | " | " | . . . | 0.34 |

showing that as the cereal market tends to become world wide, so the influence of the home production on prices tends to diminish.

With regard to the interpretation of agricultural experiments, it should be borne in mind that they hardly ever manage to isolate the action of the factors under investigation, for the experiments usually deal with plants and animals whose functions do not lend themselves to study under rigidly homogeneous conditions. As a case in point the probable error (2) was worked out for two of Wagner's series of results dealing with manurial experiments. (Table VIII). The mean increase in yield with nitrate of soda is 6.4 kg., while the probable error is 0.66 showing that the increase is due to the manuring and not to incidental causes.

From another set of results Wagner estimates the mean relative efficiency of ammonia nitrogen (nitrate nitrogen being taken as 100), from series showing considerable variation as follows:

| | Relative efficiency | |
|---|---|---|
| | Mean | Highest and lowest figures |
| Wheat . . . . . | 87 | 13 to 107 |
| Rye . . . . . | 76 | 52 " 109 |
| Barley . . . . . | 72 | 42 " 109 |
| Oats . . . . . | 90 | 61 " 124 |

These figures were worked out by GREGOIRE (3), taking into account the unit price of the two manures, and the results are given in Table VIII, from which it is much easier to judge of relative economic advantages of the two forms of nitrogen.

The probable error is also employed to determine :

1) The minimum amount of data required for the statistical study of a problem, using the formula $n = \varphi^2/E^2$ which is obtained from that of the probable error ($E$) and from the mean of a series of terms $E = \varphi\, n$ where $\varphi$ = probable error of each term and $n$ = number of terms ;

(1) M. LENOIR. Etude sur la formation des prix. Paris, 1913.

(2) Probable error, $Ed = 0{,}48 \sqrt{\frac{2\sum(d_1^2)}{n_1(n_1-1)} + \frac{2\sum(d_2^2)}{n_2(n_2-1)}}$

where $\sum(d_1^2)$ and $\sum(d_2^2)$ are the sum of the deviations squared and $n_1$, $n_2$ are the number of terms.

(3) A. GREGOIRE, Les recherches agronomiques et l'interpretation de leurs résultats. *Annales de Gembloux* 1912, pp. 52-58.

TABLE VI. — *Correlation between rainfall and yield of Lucerne.*

| Year | Spring rainfall mm. | Deviation from the mean: Simple ($x$) | Deviation from the mean: Squared ($x^2$) | Annual yield of lucerne per hectare Quintals | Deviation from the mean: Simple ($y$) | Deviation from the mean: Squared ($y^2$) | Product of deviations ($xy$) |
|---|---|---|---|---|---|---|---|
| 1903 . . . . | 209 | — 21.6 | 466.56 | 150.90 | + 40.35 | 1 628.12 | — 871.56 |
| 1904 . . . . | 118 | — 112.6 | 12 678.76 | 142.70 | + 32.15 | 1 033.61 | — 3 620.09 |
| 1905 . . . . | 345 | + 114.4 | 13 087.36 | 168.20 | + 56.65 | 3 323.52 | + 6 595.16 |
| 1906 . . . . | 299 | + 68.4 | 4 678.56 | 109.80 | — 0.75 | 0.56 | + 51.30 |
| 1907 . . . . | 212 | — 18.6 | 345.96 | 123.56 | + 13.01 | 143.26 | — 241.99 |
| 1908 . . . . | 132 | — 98.6 | 8 721.96 | 102,80 | — 7.75 | 60.06 | + 10 136.08 |
| 1909 . . . . | 109 | — 121.6 | 14 786.56 | 60.57 | — 49.98 | 2 498.00 | + 6 077.57 |
| 1910 . . . . | 342 | + 111.4 | 12 369.96 | 79.00 | — 31.55 | 995.40 | — 3 514.67 |
| 1911 . . . . | 220 | — 10.6 | 112.36 | 48.00 | — 62.55 | 3 812.50 | — 663.03 |
| 1912 . . . . | 320 | + 89.4 | 7 992.36 | 120,00 | — 9.45 | 89.30 | + 944.83 |
| | *Mean* 230.6 | $\Sigma$ ($x^2$) = | 75 240.40 | *Mean* 110.55 | $\Sigma$ ($y^2$) = | 13 584.33 | $\Sigma$ ($xy$) = 14 893.60 |

TABLE VII. — *Manurial trials with nitrate of soda ; probable error of results.*

| | Unmanured plots: Production Kgs. | Deviation from the mean: Simple ($d_1$) | Deviation from the mean: Squared ($d_1^2$) | Manured plots: Production Kgs. | Deviation from the mean: Simple ($d_2$) | Deviation from the mean: Squared ($d_2^2$) |
|---|---|---|---|---|---|---|
| | 20.1 | + 0.6 | 0.36 | 26.2 | + 0.3 | 0.09 |
| | 20.3 | + 0.8 | 0.64 | 26.9 | + 1.0 | 1.00 |
| | 18.7 | — 0.8 | 0.64 | 23.3 | — 2.6 | 6.76 |
| | 18.9 | — 0.6 | 0.36 | 27,1 | + 1.2 | 1.44 |
| *Totals* | 78.0 | —— | 2.00 | 103.5 | —— | 9.29 |
| *Means* | 19.5 | —— | 0.50 | 25.86 | —— | 2.32 |

$$Ed = 0.48 \sqrt{\frac{2 \times 2}{4 \times 3} + \frac{2 \times 9.29}{4 \times 3}} = 0.66$$

2) The best size for experimental plots. In this connection the results of LARSEN in Sweden may be cited :

| Size of plot | Probable error |
|---|---|
| 1/16 are (1) . . . . . | 16.7 per cent of the mean |
| 1/8 " . . . . . | 10.7 " " |
| 1/4 " . . . . . | 9.8 " " |
| 1/2 " . . . . . | 8.5 " " |
| 1 " . . . . . | 7.7 " " |

(1) 1 are = 0.025 acres.

TABLE VIII. — *Relative efficiency of ammonia nitrogen and nitrate nitrogen as worked out by Grégoire.*

| Crops | No. of experiments | Percentage probability of obtaining better returns from nitrate nitrogen than from ammonia nitrogen when the price of nitrate nitrogen is taken as 100 and the relative price of ammonia nitrogen is: | | | | | | | |
|---|---|---|---|---|---|---|---|---|---|
| | | 50 | 60 | 70 | 80 | 90 | 100 | 110 | 120 |
| | | Per cent | Per cent | Per cent | Per cent | Per cent | Per cent | Per cent | Per cent |
| Wheat | 25 | 24 | 28 | 36 | 52 | 68 | 92 | 96 | 96 |
| Rye | 58 | 10 | 22 | 36 | 53 | 76 | 86 | 90 | 95 |
| Oats | 30 | 3 | 7 | 23 | 27 | 27 | 70 | 87 | 90 |
| Barley | 51 | 20 | 31 | 43 | 61 | 76 | 90 | 94 | 96 |
| Potatoes | 25 | 8 | 8 | 12 | 28 | 48 | 72 | 80 | 88 |
| Sugar beet | 40 | 25 | 30 | 45 | 60 | 75 | 92 | 95 | 100 |
| Mangoids | 48 | 23 | 40 | 62 | 81 | 92 | 98 | 100 | 100 |

These results, which have been confirmed by other authorities, show that the probable error decreases as the size of the plot increases, but not proportionately so that in practice it is usual to adopt unit areas not larger than 100 sq. metres, for with bigger plots, it becomes increasingly difficult to find a suitable experimental area where the soil shows no variability.

3) The appropriate size of samples for analysis. RODEWALD has shown: *a*) that for seed samples, 300 to 400 seeds are required for purity and germination tests, the error diminishing rapidly up to this point and but very slowly above it; and that the "error of tolerance" to be adopted is 2.22 per cent for seeds with a purity and germination capacity of 95 per cent. He also confirms NOBLE's conclusions (1) which were based on the results of practical experiments.

Summarising, the writer points out that the study of agricultural economics is a method of investigation which only yields approximate results as it is not always possible to isolate the required factors. The method, however, is the most logical one for obtaining a knowledge of the empirical laws governing the management of farms provided the data are collected with care and submitted to searching criticism.

1317 — **Farm Cost Accounting in the United States** in *The Breeder's Gazette*, Vol. LXX, No 13, p. 553, Chicago, September 27, 1916.

A wave of interest in farm cost accounting has been started by county agricultural agents in the United States. Some farm accounting has been done by the Minnesota and Illinois universities, from actual detailed annual farm records, showing the possibilities of a system of finding the cost of

(1) C. GINI. La regolarità dei fenomini rari, *Giornale degli Economisti*, March 1908, pp. 210-291.

horse labor, of growing a bushel of corn, and raising a pound of beef etc. The farm management surveys made in the last few years by cooperation of the Government and various state universities, have stirred up a demand for practical, simple systems of farm bookkeeping.

During the fall of the year, when the bulk of farm cash comes in, and the results of the year's work become apparent, a farm's accounts begin pointing the way to a revision of methods. Some crops have required more work than was estimated; machinery repairs count up to an unexpected total; plowing with a tractor costs more than the 50 cents per acre estimated when the tractor was bought; every revision of farm methods introduces uncertainty as to farm incomes; the necessity for exact information becomes very day more acute.

It is admittedly becoming difficult to figure a generous interest on land values. This of itself is driving ambitious farmers to keep accounts, so as to eliminate wasteful methods. The young farmer, who is trying to pay for land from its products, is driven to some such expedient. The evolution of efficient farm cost accounting systems will be therefore a great achievement, and progressive farmers who will take advantage of them, will be put further above the average of their fellows.

1318 – **Fixing the Price of Milk.** — Bocchicchio N., in *Il Coltivatore*, No. 28, pp. 298-302 Casale Monferrato, October 10, 1916.

In Italy it is generally considered that the milk produced by a cow should pay for the food consumed, the manure more than pay for the litter and the calf be left over as profit. The cost of the milk therefore varies directly with the cost of the food and inversely with the amount of milk produced or

where $p$ = cost of milk per annum
$V$ = " " food " "
$l$ = amount of milk produced per annum

25 per cent should be added to $p$ for profit and risk of owner, and in all large towns another 4*d* a gallon should be added for extra expenses connected with the production and distribution of the milk.

The cost of milk diminishes with the size of the cow as the food consumed is usually 12 times the cow's weight of hay or hay equivalents. So, provided she produces as much milk as a larger animal, the small cow is the more economical. Where the cows are used for draught purposes the production of milk is smaller, but the cost of the food is then lowered by the value of the work done, according to the formula $p = V - L/l$ where $L$ = the value of the work done. $L$ is usually greater than the value of the difference in the production of milk, and it is for this reason that milk is cheaper in small rural communities where the supply is drawn from the double purpose cow. As a general rule, the price of milk at the farm may be said to be equal to about twice the cost of the food, and the retail price in towns is about 50 per cent higher.

In Northern Italy the average production of a cow is 700 galls ; the average weight of the animals is 8 to 10 cwts., and the average price of hay is 4s to 5s per cwt. so that the price per gallon is

$$\frac{12 \times 9 \times 54}{700} + 25\ \% = 8.3 + 25\ \% = 10.4d.$$

In Central and Southern Italy the production is only 460 galls. the animals are larger and hay is scarce and dear, so that the cost per gallon is frequently twice as high as in the north.

## AGRICULTURAL INDUSTRIES.

INDUSTRIES DEPENDING ON PLANT PRODUCTS

1319 - **Lead Arsenate in Vine Culture** (1). — MUTTELET C. G., in *Annales des Falsifications* Nos. 94 and 95, pp. 298-301. Paris, August and September 1916.

The use of arsenical insecticides, and especially of lead arsenate is on the increase among vine growers, now that their efficiency is realised. Opinions differs as to the best period for applying them ; some say it would be wiser not to treat the vines after the formation of the grapes, while others say that no satisfactory results can be obtained unless the treatment is continued until after the flowerimg is over and the seeds are formed.

It is entirely from the point of view of public safety that the question has been examined, — to see in what proportion the poisonous salts of lead, arsenic, and copper are found to exist in the produce of vines which have undergone one or other treatment.

The Central Laboratory for the Repression of Fraud has received wines from the Clos des Pins at Cournonterral in Herault, where the vines undergo an intense and prolonged treatment with arsenical insecticides. It has been the custom to give them 4 dressings between the bursting of the bud and the end of the flowering, a sixth when the grapes have attained a third of their normal size, and a seventh before the maturation of the colour. Besides the dressings with lead arsenate, the stocks were powdered with sulphosteatite containing 10 percent of copper sulphate, or with a mixture of sulphur and copper sulphate in the proportion of 9 to 1.

From the end of June 1915, till the vintage there was no rain, traces of the sixth arsenical treatment could still be seen on the leaves, and on the soil blackened by the sulphuring.

(1) See also *R.* July 1916. 795. (*Ed.*)

From the analysis of specimens the following results were obtained :

| Specimen | Appearance of specimen. | Results of analysis | | |
|---|---|---|---|---|
| | | Lead | Arsenic | Copper |
| Ordinray wine. | Liquid, red of a rich colour, limpid, no precipitate. . . . | none | Infinitesimal traces | none |
| Wine lees. . . | Liquid slightly colored, somewhat turbid, containing a great deal of precipitate (1). . . . . | none | 5 mgms. per 100 litres | faint traces |
| Coarse lees . . | Semi-fluid mass, covered with a small quantity of liquid slightly colored (2). . . . . | 500 mgms. per kilo | 10 mgms. per kilo | traces |
| Sour wine . . | Liquid, red, faintly colored, limpid, no precipitate . . . . | none | Infinitesimal traces | none |
| Marc. . . . . | Mixture of grape stalks, pulp and pips dried in the open air (3). . | 200 mgms. per kilo | 0,1 mgm. per kilo | traces |

(1) The liquid mass carefully decanted before it was analysed, but it still remained turbid.
(2) The whole mass was made homogeneous by shaking before a sample was taken.
(3) The mixture was dry enough for a specimen to be taken immediately.

From the foregoing analyses the following conclusions were drawn :

1) Ordinary and sour wines contain no poisonous salst (salts of lead, arsenic or copper) except for infinitesimal traces of the last two.

2) Wine lees, carefully decanted, but still turbid, contain no lead, but 5 mgms. of arsenic per 100 litres and faint traces of copper. It is therefore harmless.

3) The coarse lees from the grape pressing contain 500 mgms. of lead, 10 mgms. of arsenic and traces of copper per litre. These lees are dangerous.

4) The marc contains per kilo after drying in the open air, 200 mgms. of lead, 0.1 mgm. of arsenic and traces of copper. This marc cannot be used for feeding stock, either impregnated with molasses or in the dry form.

1320 – **On the Composition of Cider Brandies.** — KAYSER E., in *Bulletin de la Société des Agriculteurs de France*, pp. 262-265. Paris, October 1916.

The effect was studied on the composition of cider brandy, of the alcoholic ferments No. 153 (*Saccharomyces mali Risleri*) and of an apiculated ferment No. 158, from the collection at the fermentation Laboratory of the Agronomic Institute.

The apple must was half from Dutch apples, quarter from Locard and

a quarter from Petit Trock apples. It contained 103.5 gms. of invert sugar per litre. The must was divided between 6 round flasks, and to Nos. 5 and 6 were added 5 gms. of phosphate of ammonia and 1 gm. of acid phosphate of potassium. Nos. 1, 2, 5 and 6 flasks were sprinkled with the ferment 153, and the flasks 3 and 4 with a mixture of the ferments 153 and 158

All flasks were allowed to ferment on a vapour bath at a temperature of 26°C. Fermentation set in after 12 hours when 1,3 and 5 were removed from the bath and put in a cupboard athe temperature of the room, when fermentation was complete, the volume of the liquids was brought to what it had been at the start, and they were analysed. The results are given in

TABLE I — *Acidity of apple must (in gms. per litre).*

| | 1 | 2 | 3 | 4 | 5 | 6 |
|---|---|---|---|---|---|---|
| Total acid | 5.28 | 4.49 | 5.06 | 4.49 | 6.69 | 6.69 |
| Fixed acid (malic acid) | 5.03 | 4.43 | 4.84 | 4.43 | 13.82 | 13.80 |
| Volatile acid (acetic acid) | 0.228 | 0.052 | 0.200 | 0.052 | 0.076 | 0.086 |

The amount of acetic acid is decidedly highest in flasks 1 and 3. The changes of temperature were inimical to the ferments, and they therefore gave rise to more volatile products which Duchlaux considered attributable to the unfavourable conditions.

The distilled liquids were found to contain impurities as shown in

TABLE II. — *Impurities in distilled liquids (per 100 cc alcohol at 100°).*

| | 1 | 2 | 3 | 4 | 5 | 6 |
|---|---|---|---|---|---|---|
| | mgms. | mgms. | mgms. | mgms. | mgms. | mgms. |
| Volatile acid (acetic). | 35.10 | 9.90 | 22.40 | 19.80 | 17.00 | 26.00 |
| Aldehydes | 106.80 | 172.20 | 120.60 | 181.80 | 150.00 | 150.00 |
| Furfurol | 0.32 | 0.26 | 0,33 | 0.40 | 0.43 | 0.45 |
| Esters | 72.50 | 145.40 | 117.00 | 208.90 | 78.00 | 181.10 |
| Higher alcohols | 160.10 | 275.00 | 150.80 | 208.00 | 120.00 | 480.00 |
| Non alcoholic total | 374.82 | 602.76 | 411.13 | 618.90 | 359.43 | 837.55 |

Speaking generally, it can be said that the composition of these brandies is clearly differentiated from that of brandies of industry. The proportion of aldehydes is almost the same as that of the esters, and the proportion of higher alcohols is greater than that of the esters, whereas the opposite is the case with ordinary cider brandies.

A higher temperature makes a decided increase in the proportion of aldehydes esters and higher alcohols, and diminishes the acid, as is seen by comparing flasks 1 and 2 with the ferment 153.

The addition of phosphate increases all the products, except the aldehydes, at a temperature of 26° C., as is seen with flasks 2 and 6. With flasks 1 and 5 which were subjected to the changes of temperature of the room an increase in ethers, aldehydes and higher alcohols was found.

The effect of the apiculated ferment was seen (in flasks 1 and 3) to diminish, at room temperature, the volatile acids and higher alcohols, and at a high temperature on the contrary (in flasks 2 and 4) to increase all the products except the higher alcohols.

1321 – **The Action of Different Charcoals on Sugar Solutions, and their Effect on the Analyses of Sugar Products.** — PELLET H., in *Bulletin de l'Association des Chimistes de Sucrerie et de Distillerie de France et des Colonies*, Vol. XXXIII. Nos. 10 to 12, pp. 220-227. Paris, April, May and June 1916.

For a long time it has been known that animal charcoal could absorb a certain amount of sugar and that it must therefore be used with discretion. The action of different charcoals has been studied, and their properties are tabulated below.

| | Weight per litre when dried | Percentage of water | Percentage of ash |
|---|---|---|---|
| | gms. | | |
| Ordinary animal charcoal or char, powdered. | 895 | 2 | 81 |
| Char washed with hydrochloric acid. . . . | 400 | 15 | 5.5 |
| « Flaming » char . . . . . | 567 | 23 | 50 |
| « Flandrac » char . . . . . | 280 | 15 | 7 |
| « Littoral » char . . . . . | 350 | 39 | 8 |
| « Eponite » . . . . . | 250 | 12 | 4.5 |
| Special charcoal for wines . . . . . | 405 | 4 | traces |
| A special charcoal (1) . . . . . | 310 | 6 | 1.5 |
| Charcoal from cherry stones (2) . . . . . | 573 | 1.5 | 1.5 |

(1) Charcoal of no particular quality tested because it cost about £ 1 per lb.
(2) Charcoal from A. M. PIUTTI, director of the School of Chemistry and professor at the University of Naples. Tested because it absorbed the most gas.

The decolorizing effect was examined of these different charcoals on a solution of molasses inverted by the Clerget process, and on a liquid clarified by subacetate of lead and subsequently freed from excess of lead by sulphurous acid. The absorbent power of these charcoals was subsequently tried on a pure solution of sugar and on a solution to which acetate and subacetate of lead had been added, as well as on the solutions obtained by treating molasses with subacetate of lead as is done commercially. The following conclusions were drawn :

1) The charcoals which can be used in the analysis of sugars have very different densities. They differ also considerably in composition, since some have 81 per cent of ash, whilst others have only traces. They have very different decolorizing power.

2) From a pure solution of sugar, they all absorb more or less sugar. This absorption is less when the sugar solution contains lead.

3) From a solution of molasses clarified by subacetate of lead, the charcoals absorb no sugar, or only traces; some even increase polarisation to the right.

4) When a solution of molasses is analysed by Clerget's inversion process, it is found that certain charcoals cause a diminution in the sugar, whilst others have no appreciable effect. The special charcoal for decolorizing wines gives the best results.

5) This particular charcoal does not absorb the reducing substances contained in beet molasses nor in the non-fermented residue left after distilling sugar-cane molasses, but does appear to absorb non-fermented polarising substances in this residue. This sugar-cane molasses residue contains 7 to 9 per cent of reducing substances, whereas beet molasses has only 0.7 to 2.5 per cent according to the conditions of fermentation, though in special cases it may have more tham 2.5 per cent.

1322 – **Wheat Offals and their Adulteration.** — SIROT M. and JOSEF G., in *Annales des Falsifications*, Nos. 92-93, pp. 207-217. 4 Tables. Paris, June-July 1916.

Wheat offals have been used from time immemorial for feeding cattle;

TABLE I.

| Name | How obtained and description | | How Used |
|---|---|---|---|
| First Flour | First bolting, re-ground semolina, almost pure starch and gluten; the part that contains least cellulose fragments | | Kept for human consumption |
| Second Flour | "Seconds" semolina and regrindings | contain more cellulose fragments | |
| Third Flour | Regrindings | | |
| Fourth or brown flour | Remains of regrindings and sometimes siftings | | |
| Mixed middlings | Remains from all grindings | contain less and less starch | Offals kept for animal consumption |
| Bastard Middlings | From first bolting | | |
| Fine sharps | ..... | | |
| Coarse sharps | ..... | | |
| Fine, medium and coarse bran | Husks containing low percentages of starch | | |
| Germs | ..... | | |
| Stive dust | Light stuff, hair, starch, powders, dust | | |
| Siftings | Small stones, aborted grains and different seeds | | |

TABLE II. — *Composition of wheat offals (in percentage).*

| | Brown flour | Middlings | | | Sharps | | Brans | | | Germs | Stive dust | Siftings | Small grain | |
|---|---|---|---|---|---|---|---|---|---|---|---|---|---|---|
| | | First quality | | Second quality | Fine | Ordinary | Fine | Medium | Coarse | | | | Ordinary | Assorted |
| Moisture | 12,5 | 16,3 | 10,2 | 15,2 | 13,2 | 12,0 | 15,6 | 16,0 | 13,6 | 11,5 | 9,1 | 6,9 | 13,3 | 7,0 |
| Nitrogenous substances | 14,9 | 10,5 | 14,8 | 13,8 | 12,6 | 15,5 | 15,1 | 14,7 | 11,6 | 32,2 | 6,7 | 12,7 | 11,5 | 15,4 |
| Fat | 2,7 | 1,6 | 4,5 | 2,4 | 2,4 | 4,4 | 5,8 | 3,3 | 2,3 | 7,0 | 2,1 | 3,1 | 2,2 | 2,1 |
| Nitrogen free extract | 66,4 | 67,9 | 61,8 | 61,0 | 58,2 | 54,7 | 53,2 | 52,5 | 49,8 | 43,7 | 75,2 | 34,6 | 66,6 | 69,7 |
| Cellulose | 1,7 | 2,5 | 4,8 | 4,9 | 8,2 | 6,6 | 5,4 | 8,2 | 17,0 | 1,4 | 5,4 | 8,2 | 3,0 | 2,2 |
| Ash | 1,8 | 1,2 | 3,9 | 2,7 | 5,4 | 6,8 | 4,9 | 5,3 | 5,7 | 4,2 | 1,5 | 34,5 | 3,4 | 3 1 |
| Ash insoluble in acids | — | 0,09 | — | 0,2 | — | — | 0,10 | 0,50 | — | — | — | 23,40 | 1,20 | — |
| Phosphoric acid | — | 0,51 | — | 1,15 | — | — | 2,30 | 3,20 | — | — | — | 1,01 | 0,86 | — |
| Lime | — | 0,06 | — | — | — | — | 0,26 | 0,22 | — | — | — | 4,60 | — | — |
| Nutritive value in starch. (KELLNER) | From 75 to 60 | | | | | | From 50 to 40 | | | | | | | |

their nutritive value depends on their composition, and they must therefore be chosen with care.

It was with the object of shewing farmers the composition and value of the different offals and how to recognise fraud that this investigation was made.

After rehearsing the structure of the grain of wheat and the processes it undergoes when ground, the classification of the various products are shewn in Table I.

All the offal grains were examined, and their composition is shewn in Table II. The numbers given are the mean of many analyses.

*Adulterations.* — Many commercial waste products of the same appearance as these offal wheats can be mixed with them. Brown flours and pollards are seldom adulterated; occasionally a cheaper flour such as barley, rye, maize or rice is added, but it scarcely affects nutritive value. The same cannot be said of such heavy substances as plaster and earth, or, what is more frequently found, mill sweepings. With real brans fraud is easier. At the district laboratory of Auxene, two specimens were analysed of which one contained about 15 per cent of sawdust and the others 12 cent per cent of "rice balls". The composition of these and of other products which lend themselves to adulteration are given in the tables.

In addition to the above, stress is laid on the changes which fermentation causes in bran even when pure. This shews itself by an increase in acidity. Ordinary bran has an acidity equivalent to about 0.15 gms. of sulphuric acid per cent. When the acidity is more than twice this, the bran should be thrown away.

*Conclusion.* — Offal wheats may be divided into two chief categories according to their nutritive value: the pollards, coarse and fine, (middlings and sharps) and real brans. These last fetch a price relatively too high, and it would be well if farmers knew to keep them for special cases, and if they sought more concentrated forms of food in the cheaper oilcakes of commerce. In any case, they cannot be too strongly urged, when buying bran, to assure themselves that it is unadulterated and in a good state of preservation.

1323 - **Investigations on the Peat Beds and the Peat Industry in Canada.** — ANREP A., *Canada Department of Mines, Mines Branch Bulletin*, No. 11, pp. 1-185. Ottawa, 1915.

The present paper is a report on the investigations on peat beds and the peat industry carried out in Eastern Canada by the Department of Mines during the years 1913-1914. Thirty one peat beds are mentioned and photographs are given of 62 species of plants which constitute the basis of beds in Eastern Canada. The utilization of peat in the United States, in Switzerland, in Norway, in Denmark and in Russia is discussed, and the plant used is described in an appendix.

1324 – **Sterilized Fresh Eggs.** — BLIN H., in *La Nature*, No. 2244, pp. 221-223. Paris, September 30, 1916.

The production of eggs has become an important industry in Europe and America, the principal producing countries being:

| | Annual productions Tons |
|---|---|
| United States | 800 000 |
| France | 300 000 |
| Germany | 250 000 to 270 000 |
| England | 125 000 |
| Denmark | 55 000 |

It is due to the development of cold storage that the egg trade has increased so largely in the United States. In 1911, nearly 1000 million eggs were preserved in this way, representing a value of £6 million, and during the same year Russia exported eggs to the value of £8 600 000. Such a considerable traffic has only become possible owing to the continuous improvements which are introduced in the various processes of preservation and to a strict observance of the following principles:

1) Only fresh eggs (not more than a few days old) are preserved and these are all tested before storage.

2) The passage of oxygen and of germs through the shell is prevented by avoiding the evaporation of the liquids from within the shell and the consequent production of an air space.

3) All stale or abnormal eggs are rejected, and the health and food of the birds are carefully watched.

4) No eggs are preserved in very hot or stormy weather.

At the present time various processes are currently employed for the preservation of eggs:

1) *Smearing the shells with grease.* — Paraffin, vaselin, lard, etc. may be used for the purpose, but the method is an expensive one and is only applicable for home use.

2) *Immersion in a liquid.* — Lime water, brine or waterglass may be employed, but the method is not entirely satisfactory as eggs thus preserved sometimes have a musty or lime flavour and the shells crack when put into hot water. Moreover the eggs are not sterilized.

3) *Cold storage.* — Though representing a great advance on previous processes, cold storage does not ensure perfect preservation as the low temperature does not destroy micro-organisms but merely arrests their development, so that if an egg were infected before being put into storage, it is even possible for putrefactive changes to proceed slowly at 1° C. Losses from this cause frequently amount to 5 per cent. After being stored for 4 months, an egg loses its "new laid" flavour and acquires a taste known as "stale" or "cold stored"; after 5 months the egg is no longer suitable for boiling and after 8 or 9 months its quality is approximately that of an egg preserved in lime water. As the effect of a low temperature as a preservative depends so largely on the condition of the

egg when put into store, it is of the first importance that cold storage warehouses be established in the very centres of production so that all transport of fresh eggs be minimised as possible.

4) *Sterilization in closed vessels.* — In order to preserve eggs in a perfectly fresh and wholesome condition, it is necessary to combine cold storage with a preliminary sterilization such as is practised in the Lescardé method which was making great headway in France before the war. By this method the eggs are exposed in closed vessels to an atmosphere consisting of carbon dioxide and nitrogen, and this together with a low temperature is sufficient to destroy bacteria and moulds in a short time and to ensure the subsequent preservation of eggs over a long period. Details of the process are as follows :

On arrival at the factory the eggs are unpacked and tested in order to discard all stale or cracked eggs. The testing is carried out with a simple apparatus consisting of a sheet of cardboard pierced with 168 holes each destined to hold an egg in a vertical position. The cardboard is held in a wooden frame fixed on to an empty wooden case lined with metal sheeting. There are two electric bulbs inside the case and the testing is carried out in a dark room so that it is easy to see the rays passing through the eggs and to distinguish rotten or spotted specimens. For each million eggs handled, 2 of these testers are required.

After being tested the eggs are transferred to a cooling room where they are packed into metal cases. Each case contains 6 trays and holds 1000 eggs. Cavity walls preserve the contents from bumps and an outer covering of wood facilitates the handling of the cases. As each case is filled a little calcium chloride is sprinkled inside to dry the air, and the lid is soldered on to the case, taking care that a small round hole of 5 mm. diam. is left open in the lid. The cases are loaded on to a truck and run into an autoclave very similar in construction to that used for creosoting railway sleepers. There the chamber is first exhausted to get rid all oxygen — both atmospheric and dissolved in the egg albumen and — then carbon dioxide is then run in through a coil plunged in warm water so that the intense cold of the gas as it issued from the cylinder should not crack the egg shells. When the pressure inside the chamber is equal or slightly above that of the atmosphere, the flow of carbon dioxide is stopped, the saturation of the eggs with carbon dioxide being assured as soon as the manometre becomes steady. As there might be some risk of the carbon dioxide having a solvent effect on the albumen during storage, the pressure of the gas in the autoclave is watched carefully and as soon as it goes above a certain point, carbon dioxide is pumped out and replaced by nitrogen (compressed, sterilized and cooled to 15° C.), the mixture adjusted so that it remains sufficiently antiseptic to ensure sterilization without attacking the albumen. As soon as this has been accomplished and the egg liquids are saturated with nitrogen, the autoclave is opened, the truck drawn out, and the openings in the lids of the cases are quickly sealed. A small solder plug is used for the purpose and it is coated over with a mixture of oil and grease. No danger of infiltration of air during the operation need be feared as the

carbon dioxide absorbed by the eggs is given off for some time after removal from the autoclave.

The cases, after sterilization, are stored at a low temperature (0 to 2° C.), there being no need to make any special provision for ventilation or for drying the air of the store room. On being removed from storage the cases are taken to a room heated to 20° to 25° C., and when the temperature of the eggs has reached 7° to 8° C. (the external temperature of the cases being 15° C.) the cases are opened and the eggs are packed and dispatched to market. A special advantage of the method is evident when the eggs are warmed, for it avoids all condensation of water on the surface (a frequent source of subsequent infection) and for this reason these is no immediate hurry to use the eggs after bringing them out of the store room.

Eggs which have undergone the above process are perfectly sterile; evaporation being inhibited, no loss of weight occurs; after 10 months' storage the eggs is still suitable for boiling; the air space having remained the same, no difference of any kind can be distinguished between fresh and preserved eggs when tested by light. The method has been in use in France, Italy and the United States either in special factories or in connection with ice factories.

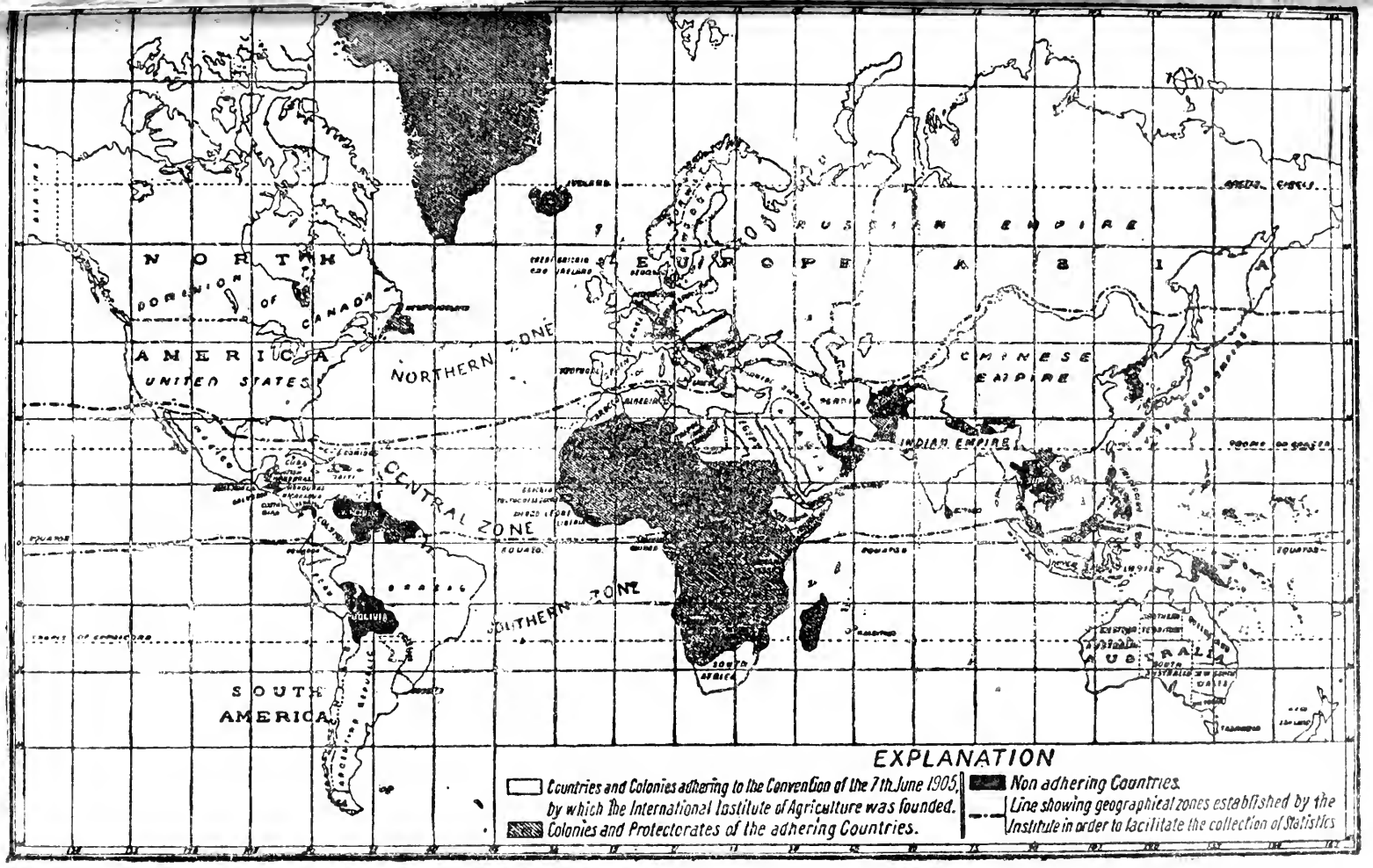
NORTH AMERICA
DOMINION OF CANADA
UNITED STATES
NORTHERN ZONE
CENTRAL ZONE
SOUTHERN ZONE
SOUTH AMERICA
BOLIVIA
EUROPE
ASIA
RUSSIAN EMPIRE
CHINESE EMPIRE
INDIAN EMPIRE
PERSIA
SOUTH AFRICA
AUSTRALIA
EXPLANATION
Countries and Colonies adhering to the Convention of the 7th June 1905, by which The International Institute of Agriculture was founded.
Colonies and Protectorates of the adhering Countries.
Non adhering Countries.
Line showing geographical zones established by the Institute in order to facilitate the collection of Statistics