LOADING OUT FRUITS AND VEGETABLES

in wholesale warehouses

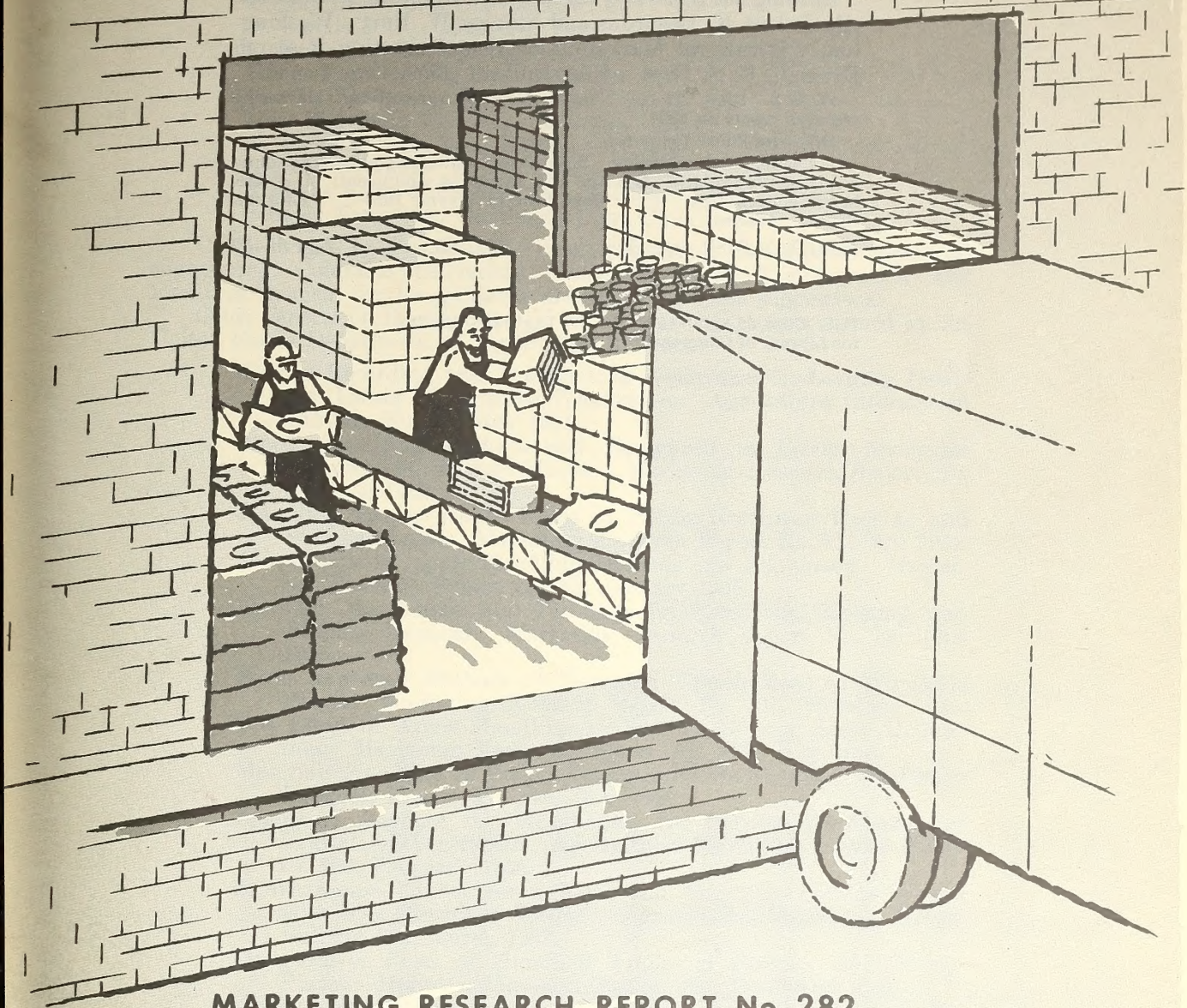

MARKETING RESEARCH REPORT No. 282

Agricultural Marketing Service
Marketing Research Division
U. S. DEPARTMENT OF AGRICULTURE

Bogardus, Robert Kent, 1920–

Loading out fruits and vegetables in wholesale warehouses. [By Robert K. Bogardus and Stanley W. Burt. Washington] Agricultural Marketing Service, Marketing Research Division, U. S. Dept. of Agriculture [1959]

vi, 53 p. illus. 27 cm. (U. S. Dept. of Agriculture. Marketing research report no. 282)

Bibliographical footnotes.

1. Loading and unloading. 2. Fruit[—Loading and unloading equipment] 3. Vegetables[—Loading and unloading equipment] 4. [Warehouses—Machinery] I. Burt, Stanley Wayne, 1924– joint author. (Series)

HD1751.A9183 no. 282 658.785 Agr 59–59

U. S. Dept. of Agr. Libr. 1Ag84Mr no. 282
for Library of Congress †

For sale by the Superintendent of Documents, U. S. Government Printing Office Washington 25, D. C. - - Price 35 cents

Preface

The study on which this report is based is part of a larger research project on the physical handling of various types of packages of perishable produce at various stages in the marketing system. This study was conducted under the supervision of William H. Elliott and Joseph F. Herrick, Jr., head and agricultural economist, respectively, of the Handling and Facilities Research Section, Transportation and Facilities Branch, Marketing Research Division, Agricultural Marketing Service.

The authors wish to thank the following companies for making their facilities available for detailed studies of loading out operations:

Bigger Bros., Inc., Charlotte, N. C.
D. Canale & Co., Memphis, Tenn.
L. F. Fadler Co., Springfield, Mo.
Hobbs-Parsons Co., Fresno, Calif.
Ben E. Keith Co., Fort Worth, Tex.
Max Movsovitz Co., Inc., Savannah, Ga.
A. Reich & Sons, Inc., Kansas City, Mo.
Rideout Produce Co., San Diego, Calif.
Roanoke Fruit & Produce Co., Roanoke, Va.
Schuler Fruit Co., Oklahoma City, Okla.

Credit is due to Frederick C. Winter, associate professor of industrial engineering, Columbia University, consultant to the Transportation and Facilities Branch, for his guidance and many valuable suggestions.

Other reports on the handling of perishable food products issued by the United States Department of Agriculture include:

*Use of Recording and Transcribing Equipment in Loading Delivery Trucks of Produce Wholesalers. Agriculture Information Bulletin No. 43, May 1951.

Apple Handling Methods and Equipment in Pacific Northwest Packing and Storage Houses. Marketing Research Report No. 49, June 1953.

Handling Empty Apple Boxes in Pacific Northwest Packing and Storage Houses. Marketing Research Report No. 71, June 1954.

Innovations in Apple Handling Methods and Equipment. Marketing Research Report No. 68, January 1955.

Methods, Equipment, and Facilities for Receiving, Ripening, and Packing Bananas. Marketing Research Report No. 92, June 1955.

Some Improved Methods of Handling Frozen Food in Wholesale Plants. Marketing Research Report No. 107, November 1955.

The Effect of Apple Handling Methods on Storage Space Utilization. Marketing Research Report No. 130, July 1956.

Materials Handling in Public Refrigerated Warehouses. Marketing Research Report No. 145, June 1957.

Suggested Layouts for Warehouses for Service Wholesalers of Fruits and Vegetables. Agricultural Marketing Service Bulletin 228, February 1958.

A Warehouse Layout for a Fruit and Vegetable Service Wholesaler in a Terminal Market. Agricultural Marketing Service Bulletin 232, March 1958.

Comparative Costs of Handling Apples at Packing and Storage Plants. Marketing Research Report No. 215, March 1958.

Apple Sorting Methods and Equipment. Marketing Research Report No. 230, July 1958.

---

* Out of print; may be consulted in libraries.

Contents

Issued March 1959

Summary

Service wholesalers handling 100 tons of fruits and vegetables daily can save $57 a day, or $14,250 a year, in their assembly and truckloading operations if they shift from a 2-wheel handtruck system to one that utilizes pallets, a forklift truck, and a belt conveyor.

The assembly operation requires that packages be removed from their regular storage places and be transported to the order assembly areas. Methods used in performing this operation include the use of truck, group, or master recaps. In some warehouses, assembly is accomplished by using invoices only.

Many different types of materials-handling equipment are used to transport the items called for. These include 2- and 4-wheel handtrucks, semilive and dead skids, and pallets. When these equipment types were used alone it was found that 2-wheel stevedore-type handtrucks cost $0.88 per ton to operate, whereas 40- by 48-inch pallets and electric forklift trucks cost $0.25 per ton. These costs include labor and equipment charges.

When handling equipment is used in various combinations of types, which is frequently the case, the less efficient units in the combination usually increase the costs of assembly. The highest cost system ($0.85 per ton) was that in which 2-wheel clamp trucks and 2-wheel stevedore handtrucks were used. The lowest cost system ($0.38 per ton) was used by a service wholesaler who employed dead skids and electric low-lift platform trucks.

Almost all wholesalers must make up packages of less than full-container quantities to satisfy customer needs. This is an extremely costly job when compared with the cost of assembling full packages. Poorly organized systems for making up split packages cost $7.74 per ton of split packages. An efficiently managed system cost $4.38.

Fewer methods and equipment types are used to load trucks from the order assembly area. In one system where a belt conveyor was used with a checker, 2 belt loaders and a man stowing packages in the truck, the cost was $0.66 per ton. In another case, where a 2-man crew utilized a belt conveyor and a transcriber instead of a checker, the cost was $0.46 per ton.

Since both assembly and truckloading must be performed by all wholesalers, the combined costs of these operations were determined. The highest cost ($1.41 per ton) combination made use of 2-wheel clamp trucks to perform assembly and truck loading in 1 continuous cycle. One low cost ($0.84 per ton) combination employed dead skids and electric low-lift platform trucks for assembly in conjunction with a belt conveyor transcriber system for truckloading. Another low cost system ($0.84 per ton) employed pallets and forklift truck for assembly and a belt conveyor with a checker, 3 belt loaders and 2 truck stowers for truckloading.

Warehousing operations can be improved and a high level of productivity obtained by increasing labor utilization; by planning and balancing the workload through the week; through careful personnel selection; regular and preventive maintenance; and inventory control. Modern handling equipment is able to move large quantities of merchandise at low cost if it is properly employed. In one installation a poor method of using a belt conveyor for loading trucks required 0.78 man-hour per ton with a 9-man crew. A revised method with efficient workplace organization reduced the labor to 0.38 man-hour per ton —a reduction in cost of $0.60 per ton. This was accomplished without any additional investment in equipment.

Loading Out Fruits and Vegetables in Wholesale Warehouses

By Robert K. Bogardus and Stanley W. Burt, *industrial engineers*, Transportation and Facilities Branch, Agricultural Marketing Service

Background of Study

Service wholesalers of fresh fruits and vegetables accept customers' orders through their salesmen and make deliveries to retail food stores. The wholesalers operate in warehouses where they receive commodities in carload quantities and place them in storage. Every afternoon and evening of each business day, they organize and execute the activities associated with removing the commodities from storage and placing them in trucks for delivery. The "loading out" phase of the materials handling operations performed in the service wholesaler's warehouse is the subject of this report.

A number of different types of materials handling equipment are used to move fresh fruits and vegetables through the warehouses of service wholesalers. Agricultural Marketing Service researchers worked directly with a number of these wholesalers to obtain accurate data on the methods and equipment used in the industry, under actual working conditions. Industrial engineering techniques were used to collect and analyze data so that the comparisons made here are on a truly comparable basis. In a large majority of cases the operations studied were performed at a high level of productivity. Attention will be called to those few instances where this was not true.

The cost comparisons in this report make no provision for the cost of management, the cost of owning and operating a warehouse, and for other expenses normally classified as overhead. In order to estimate the total costs attributable to truckloading operations the overhead costs would have to be added to the labor and equipment costs presented in the comparisons that follow.

Fresh fruits and vegetables come to the service wholesaler in a wide variety of package types and weights. New packages are constantly being introduced to improve quality and to reduce cost. Each of these considerations presents a handling problem to the wholesaler. In addition to this, many service wholesalers serve customers whose orders vary in quantities from 2 or 3 packages to a hundred or more. This variable order size presents a problem of organization for efficient operation. The studies made in the course of the research work reported here, reflect these factors. All of the cooperating wholesalers distributed the same variety of fruits and vegetables. They were all faced with problems of handling small orders as well as large ones.

The warehouse facilities observed varied greatly in physical shape. Some were long and narrow, some had limited storage space; several were modern, well planned warehouses. All of them were single-story structures with floors at truck-bed height. In every case, the facility presented a challenge to the service wholesaler to select the handling equipment and methods best suited to the limitations of his warehouse. In the majority of cases, the equipment selected and the methods used reflected careful consideration and planning to provide the most efficient and low-cost operation possible.

As considered in this report loading out delivery trucks consists of three major operations: (1) Preparation, (2) assembly, and (3) truckloading.

Preparation for loading out covers all those jobs that must be done before the assembly and loading operations can begin. They include taking customers' orders, preparing recaps of orders, determining inventory on hand, routing trucks, prepackaging, and package splitting.

Assembly is the bringing together of packages that are to be loaded out. It includes transporting equipment to storage points within the warehouse, locating and placing the proper packages onto the equipment, and transporting the selected items and positioning them in the assembly area. The method varies with the equipment used and the procedure employed for recapping orders.

Truckloading is the operation by which assembled packages are transferred from the assembly area into delivery trucks. It includes the stowing of packages within the truck. An important requirement is that packages be loaded in an order which will permit easy unloading at each of the several delivery points.

Preparation for Loading Out

This operation begins with the receiving of customers' orders in the office. It includes those jobs preliminary to assembly, and ends when everything is ready in the warehouse for the assembly operation to begin.

Taking Customers' Orders

Orders may be delivered to the office by telephone or in person. Delivery of orders to the office by salesmen is probably the method in widest use. Orders that are received by telephone may be taken either directly from the customer by a clerk in the office, or from a salesman who covers his territory personally and then calls the orders he has received into the office. When a salesman calls in, his orders are entered on an invoice which is the duplicate of one used by the salesman. Another way of receiving orders in the office is to record the salesman's orders on an automatic recording device attached to the telephone. When this is done, the order can later be transcribed and entered on an invoice at a convenient time.

It is in this and the recapping elements of the preparation for loading-out operations, that forms used in subsequent operations originate. Careful planning of paperwork at this stage pays dividends in the assembly and loading operations that follow. The requirements of these two operations should first be carefully determined, and the forms and procedures used in the preparatory work designed to best serve these operations.

Blank-Type Invoice

The simplest order form is the "blank" type invoice, which consists of a page of horizontal lines, with provision at the top for the name, address, and other pertinent information relating to the customer. Vertical columns provide for recording the quantity ordered, unit price, and extended price. While this form is simple in appearance, it is not necessarily easy to use. Each item, its unit and price, as well as the customer's name must be handwritten. Illegible writing can become a major problem, causing confusion, delays, and errors. It may also result in needless expense in special deliveries and the return of unordered merchandise.

Preprinted Invoice

Another order form, which eliminates many of the objections to the blank type, is the preprinted invoice illustrated in figure 1. This form is easy to use and understand. It is printed with the various commodities, varieties, and package sizes that are likely to be ordered. The items are divided into commodity groups and listed in a systematic order. In completing an invoice the order taker locates the item ordered, and, in the appropriate column, enters the number of units ordered. Some blank lines provide for writing in those seasonal or seldom ordered items not printed on the invoice.

Preprinted invoices are easily read. This removes a prime source of assembly and loading errors associated with blank-type invoices. Another advantage is that each item appears on the same line of every invoice. This arrangement facilitates the recapping job, and eases the truck-loading operation.

Because the demand and availability of fruits and vegetables changes with the seasons, it may be desirable to stock 3 or 4 different sets of preprinted invoices. Each set would list those commodities which would be regularly handled in a particular season, and as the seasons change, so also would the invoices used.

Recapping Orders

A recap (recapitulation) is a summary of orders, by commodities, for: (1) A truckload; (2) a group of truckloads; or (3) all the truckloads for a complete loading-out operation. With few exceptions, loading-out methods utilize some form of recap. The particular form used depends on the method of assembly employed.

Regardless of the type of invoice used, a prepared form is generally used for recapping. Where the blank-type order form is used, the recap sheet may consist simply of a list of commodities and their units. The recapper goes through the stack of route invoices and tallies the items by the "fence post" tally method (𝍸) as they appear on the invoices. This method of recapping is slow, and errors are rather frequent.

Preprinted invoices can be designed to permit recapping by the "pegboard" system. A pegboard consists of a flat surface with pegs positioned across the top (fig. 2). Holes along the upper edge of the invoices are alined with the pegs across the top of the pegboard. When all the invoices for a truckload are in position on the pegboard, a clamping bar is placed across the pegs so that the invoices are secure. Each commodity and each of its units is now in a line across the pegboard. With the aid of a straightedge, it is possible to have all the orders for a given commod-

FEB. MAR. APR.

DATE _____ INVOICE NO _____

S. F.

STOP NO. PAY THIS AMOUNT ♦

QUAN.	✓	DESCRIPTION		SUG. RETAIL	PRICE	AMOUNT
		GROUP NO. 1 CITRUS FRUITS				
		Gr Frt W	46-54-64			
		Gr Frt W	70-80			
		Gr Frt W	96-112			
		Gr Frt Bag	Crt			
		Gr Frt P	54-64-70			
		Gr Frt P	80-96-112			
		Lemons	5 Doz or Ctn			
		Limes	++			
		Orgs Cal	80-100-128			
		Orgs Cal	150-176-200			
		Orgs Cal	220-252			
		Orgs Cal	288-344-392			
		Orgs Bag	++			
		Orgs Tex	176-200-216			
		Orgs Tex	252-288			
		Tangerines	Bx			
		Total Group 1				
		GROUP NO. 2 BANANAS				
		Bananas	Bx			
		GROUP NO. 3 MISC. FRUITS				
		Red Del Stark	Bx			
		Red Del Reg	Bx			
		Apples	Bx			
		Delicious	Bu			
		Rome Beauty	Bu			
		Wine Saps	Bu			
		Jonathans	Bu			
		10/4# Apples				
		Avocado Pears	++			
		Pears	Bx			
		Pineapples	++			
		Rhubarb	++			
		Strawberries	Crt			
		Total Group 3				
		SPECIALTY & CANNED GOODS GROUP				
		Garlic	++			
		Horse Radish	Doz			
		Plants Cabbage	Bx			
		Plants Pansy	Crt			
		Plants Pepper	Bx			
		Plants Tom	Bx			
		Onion Sets Yel	Sack			
		Onion Sets Red	Sack			
		Onion Sets Wh	Sack			
		Onion Plants	Crt			
		Gr Beans Can	Case			
		Spinach Can	Case			
		Tomatoes Can	Case			
		Shasta	Case			
		Total Specialty				

QUAN.	✓	DESCRIPTION		SUG RETAIL	PRICE	AMOUNT
		GROUP NO. 4 VEGETABLES				
		Asparagus				
		Beans Gr	12# or Hpr			
		Beets	Doz			
		Broccoli	Crt or Bch			
		Br Sprouts	Qts			
		Cabbage	Sack			
		Carrots Col	Ctn or Doz			
		Cauliflower	Crt			
		Celery Wrap	Dz or Crt			
		Celery Reg	Bz or Crt			
		Celery	Doz or Dwf			
		Corn	Sack			
		Collards	Doz			
		Cucumbers	++			
		Endives	Doz			
		Lett Hdo Reg	Ctn			
		Lett Hdo Wrap	Ctn			
		Lett Leaf	Bu or Doz			
		Mushrooms	Pt			
		Mustard	++			
		Parsley	Bch			
		Parsnips	++			
		Peppers	Bu or 5#			
		Radishes	Crt or Doz			
		Salad Mix	Doz			
		Gr Onions	Doz			
		Spinach	Bu or Doz			
		Tomatoes	Celle Ctn			
		Tomatoes	10 or 20#			
		Turnips	Bu or Doz			
		Onions Yellow	Sack			
		Onions White	Sack			
		Rutabagas	Sack			
		Sweet Pots	Crt			
		Total Group 4				
		GROUP NO. 5 POTATOES				
		Preels F Fries	30#			
		Preels Boilers	30#			
		Cobblers	Sack			
		McClures	Sack			
		Russets No. 1	Sack			
		Russets Util	Sack			
		Russets	10# Sack			
		Triumphs No. 1	Sack			
		Triumphs	10# Sack			
		Triumphs Util	Sack			
		Triumphs	25 or 50#			
		Total Group 5				

BN 5676

Figure 1.—Typical preprinted invoice used by a service wholesaler.

ity in view at one time. The number of units for the route are quickly added across and entered on a preprinted recap at the extreme right of the board. By doing this with each commodity the recap is quickly completed for each truck.

Preprinted invoices and recap sheets are usually arranged by commodity groups. These groups may be, for example: (1) Citrus, (2) potatoes and onions, (3) split items, (4) deciduous fruits and melons, and (5) specialty items. Each of these sections on the recap is edged by a row of perforations. This permits the recap form to be separated into its commodity groups by tearing along the perforations. The ability to divide the recap this way is an advantage in the assembly operation, since responsibility for all the items in a commodity group can be assigned to one assembler.

Truck Recap

A truck recap sums up the units of each item to be loaded onto a particular truck. It consists of a list of all the commodities and their different units to be delivered on a route, together with the total number of each. This truck recap summarizes the individual invoices of the customers on a given route.

The weight of a truckload can be easily computed from a truck recap. This information is

Figure 2.—Pegboard.

useful in selecting the proper size truck for each route, and helps the checker or truckloader judge how tightly the truck must be loaded. It also helps keep the truck weight within legal limits.

Group Recap

A group recap combines a number of truck recaps, usually 4 to 6. The same recapping form is used as for individual truck recaps. A group recap is simply a recap of a number of truck recaps. The same method of making up a truck recap is used to prepare a group recap; but rather than combining individual customer orders, the recapper works with previously prepared truck recaps. Either the blank or preprinted type invoices may be used.

Master Recap

When all the orders for each commodity, shown by the units in which they are sold, are recorded on a form, this form then becomes a master recap. A master recap summarizes all the orders for the entire loading-out operation. It is prepared on the same form used for either truck or group recaps, and is made up from the recaps of the routes to be delivered. In some cases, it is made up directly from customer invoices.

The master recap is useful in inventory control. As soon as the master recap is prepared, the foreman can check it against the stock on hand. He then knows which items are short, and can either arrange for more supplies, or decide how to distribute available stocks to the customers.

Each of the three types of recap is designed to serve a particular method of assembly. The success of the assembly operation, and consequently of the entire loading-out operation, is dependent on a true and correct recap. It is essential that both the order-taking and recapping jobs be done correctly, since any error committed here will affect succeeding operations.

Routing

Customers of a typical service wholesaler are located throughout the city, as well as in smaller cities and communities for many miles around. The problem of routing is to group orders so that each delivery truck will deliver a maximum volume in a minimum of truck-miles driven. This must be done with due consideration to the customers' wishes regarding time of delivery. The factors involved are manifold: Commodities and volumes ordered are never constant, delivery conditions vary (roads under repair, blocked alleys, rain or snow), familiarity of drivers with their routes, and special service demanded by some customers. All these factors and others must be considered in determining how orders will be assigned to trucks.

Routing is usually done by the shipping clerk who uses a routing sheet together with his personal knowledge of the customers. After deciding which orders will constitute a truckload, the clerk places the invoices in the same sequence in which the deliveries will be made. When the invoices are in proper sequence they are attached to a clipboard, and become the instrument for loading the truck. Then, by loading the truck in inverse order of delivery, each item will be in its proper position in the truck.

The Use of Recaps for Assembly

Four primary methods are used to assemble produce. Each is related to the recap system employed: (1) Assembly by truck recap, (2) assembly by group recap, (3) assembly by master recap, and (4) assembly with no recap.

Assembly by Truck Recap

By the truck-recap method, every item to be loaded onto a given truck is assembled before loading begins. This method provides an addi-

tional check on the items. If the assembly and loading operations are performed correctly, the last item called by the checker will also be the last of the items assembled for the truckload. If they do not come out even, it is proof of error.

Assembly by Group Recap

A group-recap method of assembly combines features of both the truck and master recap methods. It often happens that invoices for some routes do not arrive in the warehouse until well into the night. When this happens, it is impossible to use the master recap method of assembly without some form of modification. As invoices come in, however, they can be summarized into group recaps. Orders for 5 or 6 or more truckloads may be totaled into a group recap. Using this recap, assemblers can bring up, in unit loads, items for several truckloads at one time. Group assembly permits unit load handling, but requires less assembly area than is needed with a master recap assembly. Errors are more difficult to correct than when a truck recap is used, since the error can be in any one of a number of trucks. Or if it is a multiple error, in more than one truck.

Assembly by Master Recap

Assembly by master recap brings items to the assembly area according to the total number to be loaded. To assemble all these items before the first truck is loaded would probably require more area than is available in most warehouses. In practice, the assemblers work from a master recap; but on the initial assembly of higher volume items, they bring up only a portion of the total number ordered. The number of each item brought up is noted on the recap, and as the supply becomes depleted, the assembler brings up more. This restocking continues until the exact number called for on the master recap has been loaded. In the case of low-volume items, it is the usual practice to bring up the entire amount of each initially, since this usually amounts to no more than 1 or 2 handling equipment loads for each commodity.

As often happens, the master recap cannot be made up until the loading-out operation is largely completed. Even when this is the case, it is possible to realize most of the advantages of a master recap assembly method. The workers bring up full unit loads of produce, and see that a supply of each commodity is always in the assembly area. They must, however, tally every item. When the master recap becomes available, it is compared with what has already been assembled.

At the end of the loading-out operation, every item called for on an invoice should have been loaded, with no items remaining in the assembly area. As with the truck recap method, if the items on the invoice do not coincide with the items assembled, an error is indicated. The error is more difficult to locate with the master recap system since there is no way to know which truckload is in error. Therefore, items must be checked very carefully as they are loaded. The master recap method has some laborsaving advantages over the group and truck recap methods, and becomes an effective method of assembling produce so long as errors can be minimized.

Assembly Without a Recap

The assembly operation may be performed without a recap. When this system is used, a supply of each item is in the asembly area at all times during the loading operation. Pallets and fork trucks or skids are usually used with this system. Initially, a supply of each commodity is assembled. The worker then sees to it that the area remains stocked. Unit loads of fast-moving items are allotted additional space to assure an adequate supply at all times. The loading operation proceeds as it does when assembly is by master recap. While this method permits the use of complete unit loads, it also has the disadvantage of not identifying loading errors with a particular truckload. When the loading operation is complete, unused stock is returned to its appropriate storage area.

A master recap of the seldom ordered items may be prepared, and these commodities brought up on the basis of such a recap, with the high-volume items still mass assembled. Such a practice will require less space, since low-volume items are combined and assembled together, and only in the amounts that will actually be needed.

Order Assembly Area

The order assembly area is the part of the warehouse to which items are brought and deposited prior to being loaded into delivery trucks. It is a short-term holding area where items are collected, checked, and then loaded. This is all accomplished with one of the systems already described. Located between the truckloading platform and storage places within the warehouse, the assembly area is the center of activity during the loading-out operation.

Arrangement of commodities within the order assembly area should follow an orderly, systematic pattern. A large percentage of the tonnage loaded out is represented in only a few commodities. By placing these together and at the front of the belt conveyor, if one is used, or closest to the tailgate of the truck, the total walking distance of the belt loaders is reduced. So long as it is practical, each commodity should be placed in the same position along the belt for each operation. This permits the workers to

learn the locations of the items, and reduces the amount of searching that otherwise occurs.

Each item should be so situated in the assembly area that it is clearly visible and easily accessible. Where different commodities are combined on a single piece of equipment, sufficient space should be provided about the packages to allow the workers to reach those in back without moving other packages out of the way. Combining low-volume items is a practical way to utilize more fully the space in the assembly area, and it also saves labor. This is a recommended procedure, but care must be taken that individual packages are always available to the loaders.

The assembly area is often used to store fast-moving items on a regular basis. This is particularly true for potatoes and onions. These commodities may be stored in a corner of the order assembly area and brought up as needed; or they may be stored along the belt conveyor so that they will be in position when the truck-loading operation begins. Items which are in great demand over a short season are sometimes handled in the same manner.

Storage Places and Practices

During the course of a night's assembly operation, commodities required for shipment are removed from several different storage areas. The stocking of these areas is a part of the receiving operation. Most of that work is done during the day by another crew; but the procedures used and the places in which commodities are stored have an effect on the efficiency of the operation.

A produce warehouse has provision for open storage of commodities on the warehouse floor and for cold storage in insulated rooms provided with refrigeration 24 hours a day. The cold storage rooms can be supplemented by the temporary use of refrigerator cars. This may be done when refrigerated areas are inadequate or when an unusually high volume of perishable commodities are on hand at one time.

The order assembly area is usually an integral part of the open storage area in the warehouse. Advantage can be taken of that physical fact by storing less perishable items that move in large volumes in the open storage area and adjacent to the order assembly area. When this storage practice can be followed, the distances traveled from one area to another will be minimized, and also the man-hours required for assembly.

Cold-storage rooms are costly to build, operate and maintain. Maximium space utilization is mandatory. For that reason, some wholesalers require that during the receiving operation all packages be removed from the equipment and stacked on the floor. If pallets and fork trucks are used, the packages can be left intact and the loads tiered for the most effective space utilization.

Stacking requires much more handling time than leaving commodities intact on the handling equipment. It adds time to the receiving operation as well as to the assembly operation. Regardless of the practice followed in the cold storage rooms or in the open storage area, the positioning of packages is important. During the assembly operation an assembler, working from a truck recap, has to locate specific commodities by variety, size, and in some cases, by State of origin. In each case, he must be able to identify the package accurately. For that reason the packages should be positioned in the storage area for ease of identification. Every effort should be made not to bury one commodity behind another because finding it could very easily necessitate moving a hundred packages.

When refrigerator cars are used for storage, the receiving operation is postponed. As a result, additional work is added to the assembler's duties. The assembler has to open the car doors, remove the bracing and ice if any, and take out the number of packages he needs to satisfy the recap. The disadvantage of this procedure is not only the additional time required, but also the possible deterioration in quality that can result from frequent opening or closing of refrigerator car doors. Needless to say, if cold-storage space in the warehouse is inadequate, then storage in a refrigerator car is much better than no refrigeration at all.

Assembly

The assembly operation brings together, in a central area, packages that are to be loaded out. These packages may come from refrigerator cars, open storage areas, or refrigerated rooms. They may be assembled in small units or large, and by a variety of equipment types. In some cases, a single type of equipment is used, and in others, combinations are employed.

In discussing assembly operations, it is necessary to identify the types of equipment and the method of recapping used in each case. Each of these factors has a definite influence on the man-hours required to perform the work and on its cost. Time study techniques were used to collect data in order to make time requirements for one operation comparable with those of another. A discussion of the techniques used is included in the appendix.

Transportation distances from storage points to the order assembly area varied greatly. Since

this would introduce variations in time requirements for the distance traveled, all the data, including time for transportations, were adjusted. The adjustment standardized the distance from the storage points to the order assembly area at 100 feet. These adjusted data are used in all cases where time standards for assembly are cited.

Clamp-Type and Stevedore-Type Two-Wheel Handtrucks

Two of the six assembly systems studied did not utilize a recap. One of these systems employed 2-wheel clamp-type handtrucks (fig. 3) and stevedore-type 2-wheel handtrucks (fig. 4). Both were available to the assemblers, with the one selected depending on the commodity to be assembled. When the commodities were in rigid containers, a clamp-type truck was used; when bagged items were handled, stevedore-type handtrucks were used. Approximately 70 percent of each ton handled was moved on clamp trucks and 30 percent on the stevedore-type handtrucks.

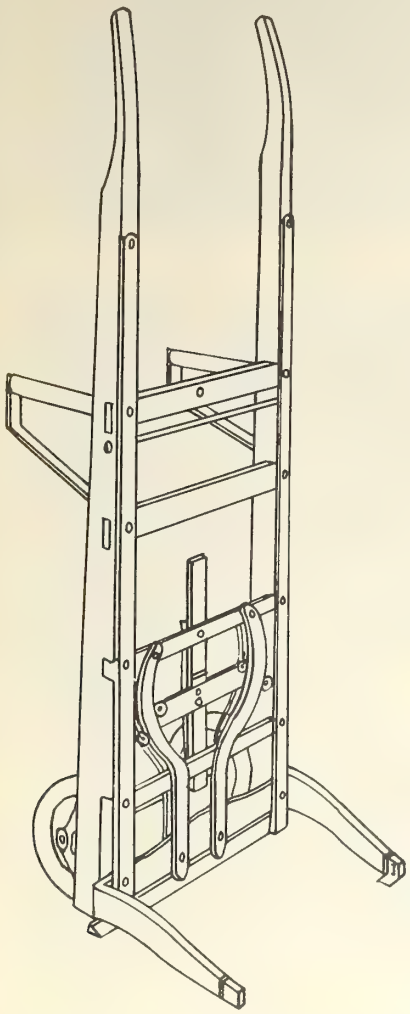

Figure 3.—A two-wheel clamp truck.

There was no distinct, separate assembly operation with this method. The operations of assembly and loading were performed by each warehouseman in one continuous cycle. However, the data were collected in such a way that the labor and equipment requirements of each operation could be analyzed separately. This discussion deals only with the assembly operation.

Assembly began with the checker in his booth and the warehousemen waiting nearby. Working with a set of invoices for a given route, he started calling out items to be assembled. The invoices had already been arranged in sequence of delivery, so that by beginning with the last invoice in the set and working to the first, the checker

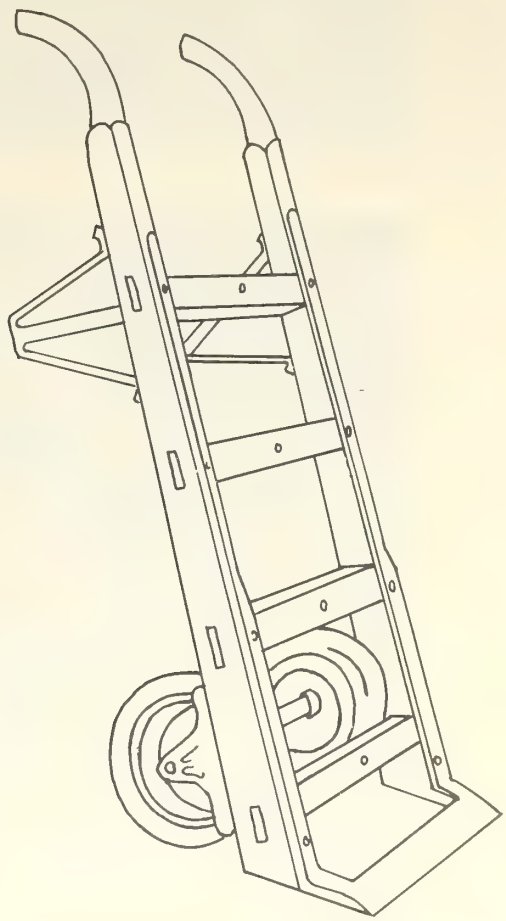

Figure 4.—A two-wheel stevedore-type handtruck.

caused the items to be delivered into the truck in proper order for unloading.

The manner in which the checker assigned items to the warehousemen had a direct bearing on the efficiency of the operation. Ideally, he would glance down the invoice and note 3 to 5 items of a similar nature, or stored in the same area. These items were then called off to a warehouseman (fig. 5). At the same time the checker placed a mark beside them to show that they had been assigned. The worker with the assignment took his clamp truck or stevedore-type handtruck and proceeded to obtain the merchandise. This usually entailed visiting several storage points. When he had assembled all the items assigned to him, the warehouseman returned with his load to the checker's booth. As he reached this point, the worker called out the items on his truck, and without stopping, continued on into the delivery truck (fig. 6).

From this point, until he returned to the checker's booth for another assignment, the warehouseman was considered to be in the loading operation. This latter phase of his work is discussed in the section on loading trucks.

As the worker passed the checker's booth and called out the items he had assembled, the checker located those items on the invoice and placed a second check mark beside them as evidence that they had been delivered into the truck. This same procedure applied to all the workers assembling items and was repeated until the truck was loaded.

The number of items assigned to a warehouseman was determined by: (1) The capacity of the equipment, (2) the ability of the worker to remember items, or (3) the diversity of commodities and package types. In the majority of cases, the number varied from 3 to 5. An experienced checker was able to work from 2 or 3 invoices simultaneously. This permitted him, in some cases, to combine orders for the same item. When it was possible to do this, the warehouseman was able to load his equipment at one storage point. Even when this was done as fully as possible, the limited load carrying capacity of the equipment made many more trips necessary in the assembly operation than would have been the case if a recap method had been used in conjunction with platform-type or unit load-handling equipment. By eliminating the recap

BN 5673

Figure 5.—Warehouseman receiving instructions from checker.

BN 5661

Figure 6.—Warehouseman returning to checker's booth with assembled items.

and delivering assembled merchandise directly into the delivery truck, however, labor required to set the load down and then pick it up for loading was eliminated.

The number of men assigned to this assembly operation varied from 3 to 6. No delays resulted from crew interference within this range of crew size (see glossary for definition of crew interference). The average number of tons handled per hand-truck load was 0.10. Labor requirements totaled 0.56 man-hour per ton as shown in the adjacent tabulation:

Time item	*Labor required (man-hours)*
Productive labor:	
1 man assembles fresh fruits and vegetables by use of clamp- and stevedore-type 2-wheel handtrucks, transports items a distance of 100 feet from the storage areas to the order-assembly area	0. 53
Cleanup	. 03
Total labor	. 56
Elapsed hours	. 56

Labor and equipment costs for this operation totaled $0.85 per ton as shown below:

Method	*Elapsed time (hours)*	*Labor and equipment required*		*Labor and equipment costs*		
		Labor (man-hours)	*Equipment (machine-hours)*	*Labor (dollars)*	*Equipment (dollars)*	*Total (dollars)*
1 man assembles fresh fruits and vegetables when work assignments are made directly from invoices. No recap used.[1]	0. 56	0. 56	[2] 0. 56	[3] 0. 84	[4] 0. 01	0. 85

[1] Transportation distance is 100 feet from order-assembly area to storage area.
[2] Clamp truck, 0.39 machine-hour; stevedore-type handtruck, 0.17 machine-hour; total 0.56 machine-hour.
[3] Based on assumed labor rate of $1.50 per hour.
[4] Equipment cost equals $0.0029 raised to $0.01.

Two-Wheel Handtrucks, Four-Wheel Handtrucks, Dead Skids, and Manual Low-Lift Platform Trucks

Service wholesalers frequently use more than one type of equipment for the assembly operation. In one warehouse, for example, 2-wheel handtrucks, 4-wheel handtrucks (fig. 7), and dead skids with manual low lift platform trucks (fig. 8), were used. As a rule, each type of handling equipment was used to assemble any of the commodities that were needed for a particular truck. The type of equipment available at the moment usually determined which would be used. The crew assigned as assemblers varied from 2 to 8 men. The larger crew usually assembled for the first 1 or 2 truck-

loads. For the balance of the loads, the crew dropped to as few as two men. Delays resulting from crew interference were not a factor.

Invoices were grouped by route, and items tallied on a truck recap. A checker called off a group of items from the recap and assigned them to a warehouseman to assemble, at the same time noting the items called. The warehouseman located his handling equipment and moved it to a storage area where all or part of the commodities assigned to him were located. When he reached that area, he picked up those items located there and loaded them on his truck or skid, and proceeded to the next storage point. When the truck or skid was full or when he had loaded all the items that had been called for, he transported the load to the order assembly area. When skids or four-wheel handtrucks were used, they were released with the load intact in the order assembly area (fig. 9). When two-wheel handtrucks were the transporting equipment, items in the load were either off-stacked manually or tipped off on the floor as near the truck as possible. The checker examined each assembled load

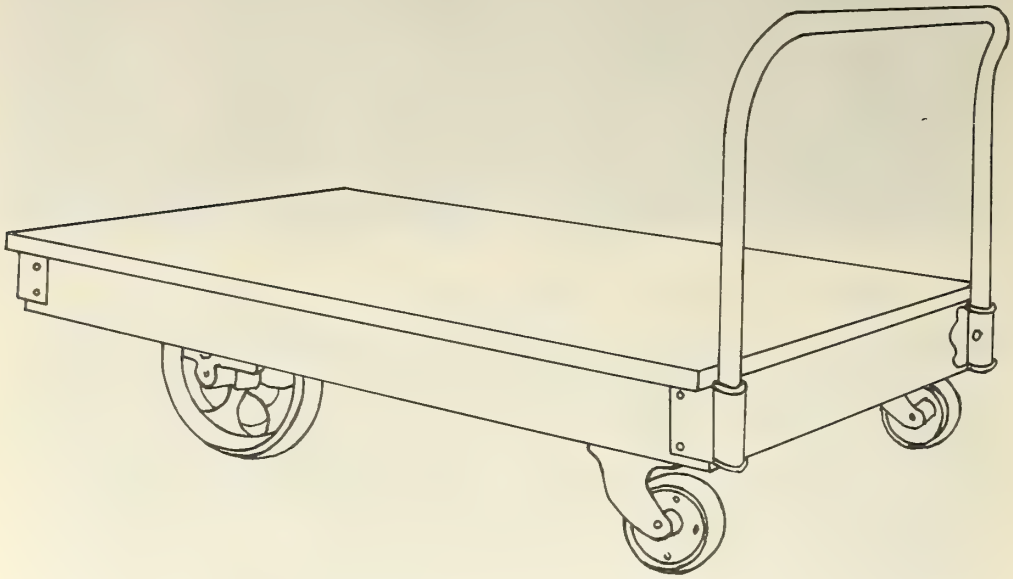

Figure 7.—A four-wheel handtruck.

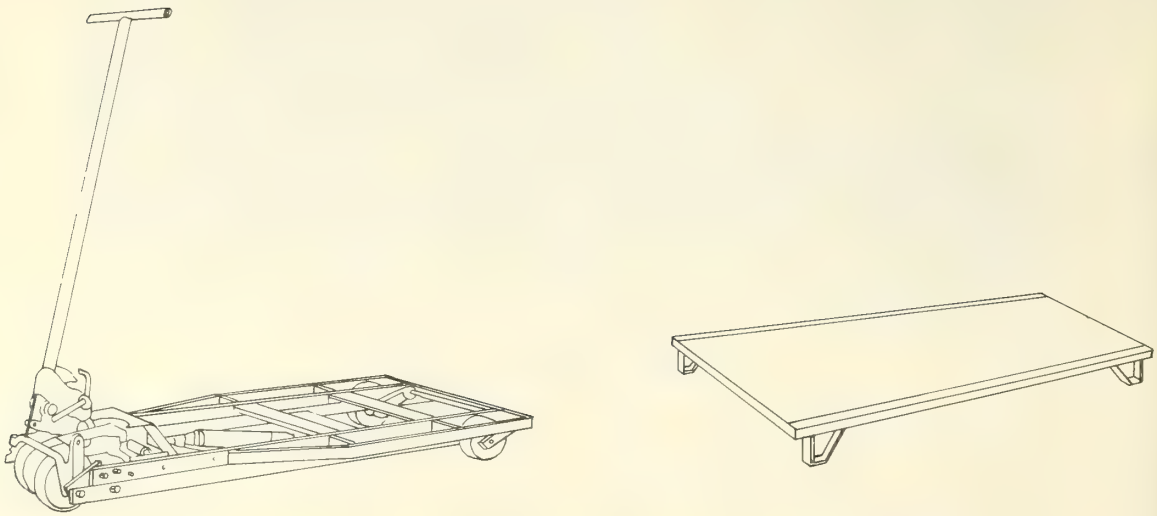

Figure 8.—Dead skid and manual low-lift platform truck.

BN 5674

Figure 9.—Part of the order assembly area showing loads assembled on four-wheel hand trucks and dead skids.

to be certain that it conformed to the items listed on the recap. This combination of equipment types required 0.42 man-hour per ton of fresh fruits and vegetables assembled as shown in the following tabulation:

Time item	*Labor required (man-hours)*
Productive labor:	
1 man assembles fresh fruits and vegetables, with a transport distance of 100 feet from the order-assembly area to the storage areas when 2-wheel handtrucks, 4-wheel handtrucks, dead skids, and manual low-lift platform trucks are used	0. 39
Cleanup	. 03
Total labor	. 42
Elapsed hours	. 42

The tonnage assembled by each of the three equipment types varied substantially. For example, on the nights when studies were made, 2-wheel handtrucks were used to move 53 percent of the tonnage; 4-wheel handtrucks 28 percent, and dead skids 19 percent. The man-hours required for each ton assembled varied with the type of equipment. If 2-wheel handtrucks had been used alone it would have taken 0.58 man-hour (including cleanup time) to move a ton of fruits and vegetables; likewise 4-wheel handtrucks used alone would take 0.25 man-hour; and dead skids 0.25 man-hour. These figures indicate that the least productive piece of equipment was used most often. Therefore, the productivity of the equipment combination as used was considerably less than it would have been had four-wheel handtrucks and dead skids been used to assemble a higher percentage of the tonnage.

The principal reason for the high man-hour figure for the two-wheel handtruck is its limited capacity. The average weight per load was 0.10 ton for 2-wheel handtrucks, 0.35 ton for dead skids, and 0.44 ton for 4-wheel handtrucks. A 2-wheel handtruck required 10 round trips to move a ton of produce. The other equipment types require slightly less than three round trips on the average for each ton moved. The productivity of this system using the 3 equipment types would be substantially improved if greater use were made of the 4-wheel handtrucks and the dead skids with manual low-lift platform trucks.

As indicated in the tabulation below, the combined labor and equipment costs per ton totaled $0.64.

Method	*Elapsed time (hours)*	*Labor and equipment required*		*Labor and equipment costs*		
		Labor (man-hours)	*Equipment (machine-hours)*	*Labor (dollars)*	*Equipment (dollars)*	*Total (dollars)*
1 man assembles fresh fruits and vegetables, with a transport distance of 100 feet from the order-assembly area to storage area when a truck recap is used	0. 42	0. 42	[1] 0. 71	[2] 0. 63	[3] 0. 01	0. 64

[1] 2-wheel handtruck, 0.31 machine-hour; three 4-wheel handtrucks, 0.21 machine-hour; 3 dead skids, 0.14 machine-hour; low-lift platform truck, 0.05 machine-hour; total 0.71 machine-hour.

[2] Based on assumed labor rate of $1.50 per hour.

[3] For equipment cost calculations see table 14 in the appendix.

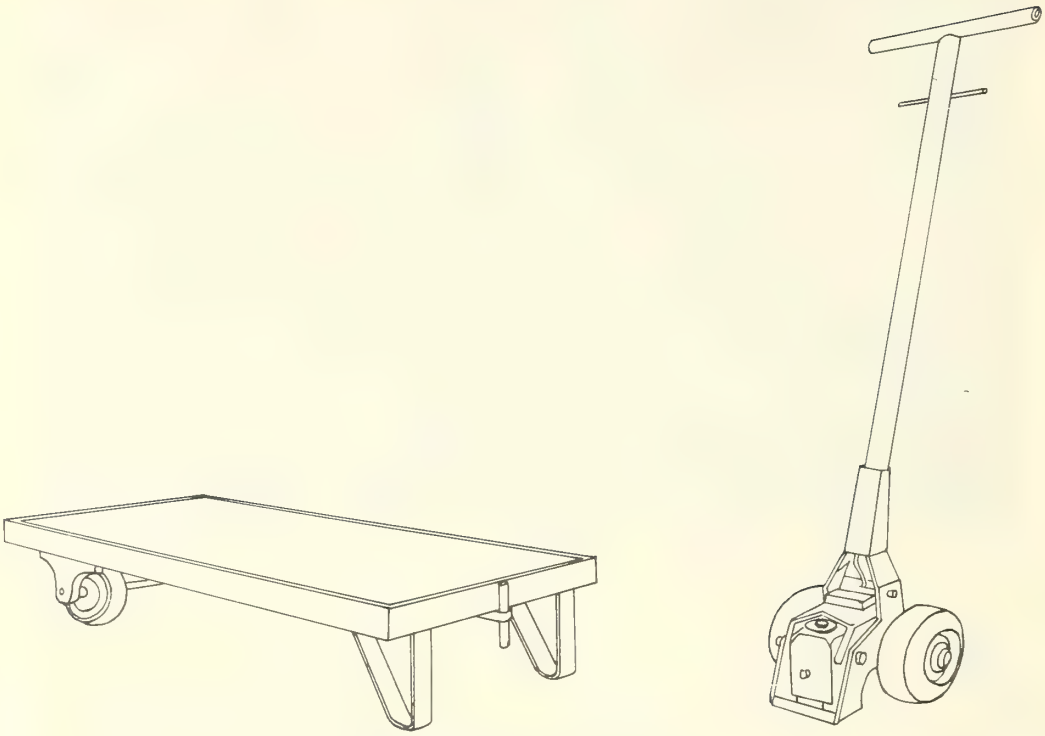

Figure 10.—Semilive skid and jack.

The type of recap used for the assembly operation can vary as well as the handling equipment. In one warehouse where semilive skids and jacks were used, a group recap was the basis for assembly (fig. 10). The group recap was a summary of from 4 to 6 truck recaps. Assembly from a group recap resulted in the assembly of larger quantities of each commodity at a time than would occur with an individual truck recap. Fewer trips were necessary, and in some cases, a skidload could be made up of a single commodity. In the warehouse where this system was used, the commodities were stacked on the floors of the open storage areas and in cold storage rooms. One man did all the assembly work required.

The procedure followed by the warehouseman assigned to assembling was to obtain a section of the group recap from the office, study the section to determine the order in which the items would be assembled, locate an empty skid, pick it up with the jack and transport it to the first indicated storage area. Here he located the commodity listed, and loaded the proper amount on the skid. From here he proceeded to appropriate storage points and repeated the procedure. When the skid was full (fig. 11), or that section of the recap exhausted, he transported the load to the order assembly area. Here the skid was released wherever convenient with the load intact. Using semilive skids and jacks and a group recap, a ton of produce was assembled in 0.30 man-hour at a cost of $0.46 per ton for labor and equipment as shown in the tabulations below. The average load per skid was 0.44 ton.

Time item	*Labor required (man-hours)*
Productive labor:	
1 man assembles 1 ton of fruits and vegetables when the transportation distance from the order-assembly area to the storage area is 100 feet; semilive skids and jack are used	0.27
Cleanup	.03
Total labor	.30
Elapsed hours	.30

Method	Elapsed time (hours)	Labor and equipment required: Labor (man-hours)	Labor and equipment required: Equipment (machine-hours)	Labor and equipment costs: Labor (dollars)	Labor and equipment costs: Equipment (dollars)	Labor and equipment costs: Total (dollars)
1 man assembles fruits and vegetables with a transport distance of 100 feet from the order-assembly area to storage areas when a group recap is used	0.30	0.30	[1] 1.20	[2] 0.45	[3] 0.01	0.46

[1] 3 semilive skids, 0.90 machine-hour; jacklift, 0.30 machine-hour; total 1.20 machine-hours.
[2] Based on an assumed labor rate of $1.50 per hour.
[3] The combined costs for 3 skids and 1 jack would be $0.0051. This was raised to $0.01 per ton.

BN 5660

Figure 11.—Assembler with a full load on semilive skid.

Pallets, Electric Pallet Transporters, and Four-Wheel Handtrucks

Some service wholesalers handle canned goods and a few grocery items as a service to the institutions that buy fruits and vegetables from them. In one warehouse, these added items accounted for 10 percent of the tonnage shipped out. They were handled on the same equipment and in the same manner as the produce items. Pallets, electric pallet transporters (fig. 12), and 4-wheel handtrucks (fig. 7) were used in the assembly operation. Work assignments were made on the basis of individual truck recaps. The recap was divided into several sections. Each section covered a group of commodities that one man assembled.

When an assembler received his section of the recap, he located a pallet transporter and then a pallet or he located a four-wheel handtruck. He then proceeded to the storage area and built a load on his pallet or handtruck of the items listed on his recap. When his equipment was loaded, he would transport it to the order assembly area and deposit the pallet or four-wheel handtruck there.

All the commodities were stored on pallets in the warehouse storage areas. In some cases, a full pallet load would be moved to the order assembly area. This usually occurred for such items as potatoes, lettuce, and oranges when the recapped total was about equal to a pallet unit load. However, recapping by truckload did not provide as many opportunities for this to occur as with a group recap or a master recap. Pallets and pallet transporters were used to move commodities in large volumes. Four-wheel handtrucks were used for those items that moved in small volumes.

The less efficient of the combination reduces the level of productivity below that of the more efficient piece of equipment. When two or more types of handling equipment are used, for example, in this case, the labor required per ton for the combined system is 0.31 man-hour. Ex-

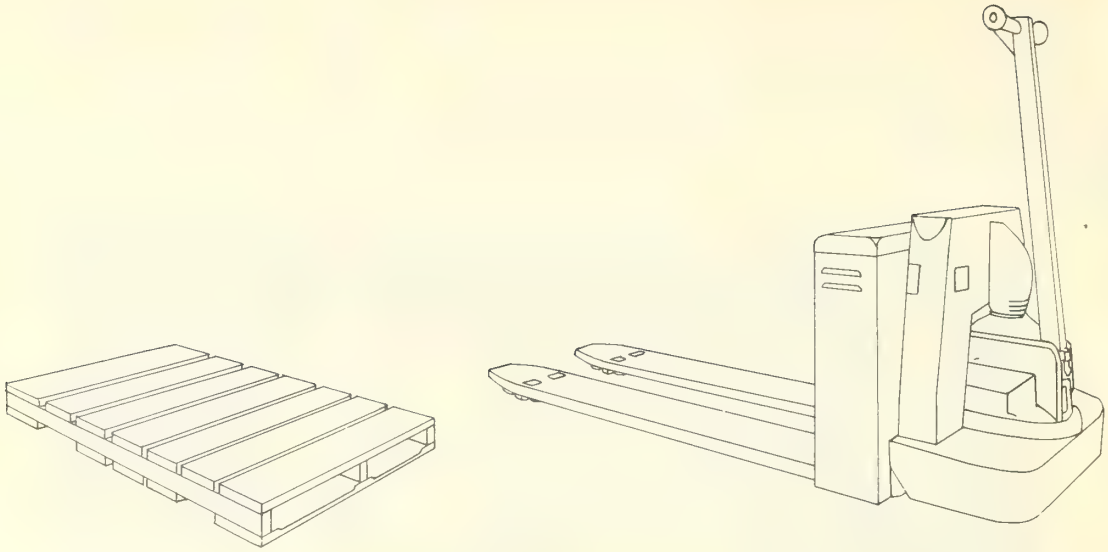

Figure 12.—Pallet and pallet transporter.

amined separately, however, we find that pallets and pallet transporters required 0.26 man-hour per ton and 4-wheel handtrucks 0.57 man-hour per ton (including cleanup time). The average load per pallet was 0.62 ton—per 4-wheel handtruck 0.32 ton. Since 4-wheel handtrucks were used to move only 15 percent of the total tonnage, the effect of their inefficiency on the total time was minimized. It should be noted that in this particular system, the method of use of the equipment had a decided effect on the time requirement. Four-wheel handtrucks were used for commodities shipped in small volumes. This meant that more time was required to locate each package and more walking was necessary from one storage point to another because of the large number of different items to be assembled for each truckload. Had a group recap or a master recap been used for these items, the work could have been performed in less time. The assembly crew usually consisted of from 4 to 6 men.

The labor required when one man performs this operation is as follows:

Time item	*Labor required (man-hours)*
Productive labor:	
1 man assembles 1 ton of fruits and vegetables when the average transportation distance from the order-assembly area to the general-storage area is 100 feet; pallets, electric pallet transporter, and 4-wheel handtrucks are used	0. 28
Cleanup	. 03
Total labor	. 31
Elapsed hours	. 31

The tabulation below indicates that when this system is used it costs $0.52 per ton for each ton assembled.

Method	*Labor and equipment required*		*Labor and equipment costs*		
	Labor (man-hours)	*Equipment (machine-hours)*	*Labor (dollars)*	*Equipment (dollars)*	*Total (dollars)*
1 man assembles 1 ton of fresh fruits and vegetables with a transportation distance of 100 feet from the order-assembly area to the storage areas when a truck recap is used	0. 31	[1] 1. 11	[2] 0. 47	[3] 0. 05	0. 52

[1] 2.5 pallets, 0.55 machine-hour; pallet transporter, 0.22 machine-hour; four 4-wheel handtrucks, 0.34 machine-hour; total 1.11 machine-hours.

[2] Based on an assumed labor rate of $1.50 per hour.

[3] For equipment cost calculations see table 14 in the appendix.

Pallets, Forklift Trucks, and Four-Wheel Handtrucks

One service wholesaler performed the assembly operation without using any kind of recap for 82 percent by weight of the fresh fruits and vegetables transported to the order assembly area. Pallets and fork trucks were used to move the unrecapped commodities (fig. 13). All items were stored in the warehouse on pallets, with 5- and 10-pound bags of potatoes in pallet boxes. This part of the assembly operation began when the fork-truck operator first started to stock the assembly area with pallet loads of produce. It included driving the fork truck to a storage

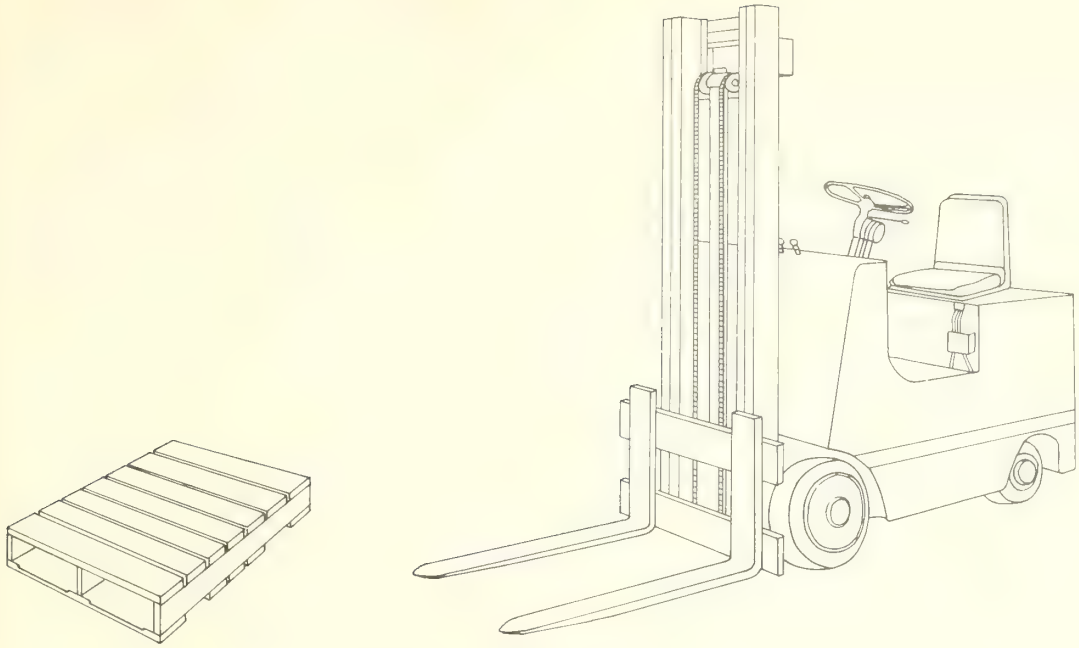

Figure 13.—Pallet and forklift truck.

point, picking up a pallet load, transporting it to the order assembly area, setting down and positioning the loaded pallet alongside the belt conveyor. It also included resupplying the order assembly areas during the time the trucks were being loaded, and removing empty pallets. When all the trucks were loaded, containers of produce left over were picked up on their pallets and transported to the proper storage area. This part of the operation ended when the last unused containers in the assembly area were returned to storage.

Eighteen percent of the tonnage for shipment was assembled on four-wheel handtrucks, made up of commodities that moved in small amounts. The items to be assembled by four-wheel handtrucks were tallied on a truck-recap sheet. The operation of assembling these items began when the assemblyman received a copy of the recap. It included locating a four-wheel handtruck, transporting it to the first storage area, locating items indicated on the recap, placing the packages on the truck, and locating as many additional items in other storage places as the recap called for until all the items had been obtained, or until the handtruck was loaded. It also included transporting the loaded truck to the order assembly area and depositing it in a position easily accessible to the truckloaders. The operation ended when the items on the last recap had been loaded on a four-wheel handtruck and transported to the order assembly area. A forktruck operator and two assemblers were assigned to this operation on a regular basis.

The tabulations that follow indicate that the man-hours required to move fresh fruits and vegetables when this combined system is used is 0.24 per ton and the cost is $0.47 per ton.

Time item	*Labor required (man-hours)*
Productive labor:	
1 man assembles fruits and vegetables when the transportation distance from the order assembly area to the storage areas is 100 feet; pallets, forklift truck, and 4-wheel handtrucks are used	0. 21
Cleanup	. 03
Total labor	. 24
Elapsed hours	. 24

Method	*Elapsed time (hours)*	*Labor and equipment required*		*Labor and equipment costs*		
		Labor (man-hours)	*Equipment (machine-hours)*	*Labor (dollars)*	*Equipment (dollars)*	*Total (dollars)*
1 man assembles fruits and vegetables when transportation distance from order-assembly area to storage area is 100 feet	0. 24	0. 24	[1] 0. 73	[2] 0. 39	[3] 0. 08	0. 47

[1] Industrial fork truck 0.12 machine-hour; five 4-wheel handtrucks, 0.61 machine-hour; total 0.73 machine-hour. Pallet costs in this case are based on equivalent number of uses.

[2] Based on an assumed labor rate of $1.50 per hour for assemblers and $1.75 per hour for forklift-truck operator.

[3] See table 14 in appendix for complete calculations.

The combined use of equipment in this assembly operation provides another example of the depreciating effect of an inefficient assembly method on one that is efficient. Had it been possible to use fork trucks and pallets to assemble all commodities without a recap, the required man-hour per ton (including cleanup time) would have been 0.15. The man-hour per ton that resulted from using a truck recap and 4-wheel handtrucks for slow-moving items was 0.68. In this case also the inefficiency is attributable to the method used and not the equipment.

Further comment should be made on the productivity of pallets and fork trucks when they are used in conjunction with moving unit loads of commodities from the storage areas into the order assembly area. In the operation studied, 32- by 40-inch pallets were used. The average load was 0.35 ton. (The 4-wheel handtrucks carried an average load of 0.23 ton.) The pallet size was fairly small. Other firms use a 40- by 48-inch pallet size. Had this size been used in the warehouse studied, the man-hours per ton would have been 0.10, since that capacity of the larger pallet is greater. A conservative estimate would be 0.60 ton per pallet. Since the additional time required to move a larger load with a fork truck is negligible, the time required per ton is less. For example, using the smaller pallet with an average 0.35-ton load, the time per pallet was 0.042 hour. Since 2.86 32- by 40-inch pallets were required to move 1 ton, the time required (exclusive of cleanup time) is 0.12 hour. When the larger pallet was used, it still only required 0.042 hour per pallet for assembly. However, only 1.67 40- by 48-inch pallets were now needed to move 1 ton. Based on these figures, the assembly time required with the larger pallet is 0.07 hour. This figure becomes 0.10 hour when time for cleanup is added.

Dead Skids and Electric Low-Lift Platform Trucks

In another warehouse operation, dead skids and electric low-lift platform trucks (fig. 14) were used in the assembly operation. Work assignments to the assemblers were based upon the use of group recaps. Each member of the crew was assigned a portion of this recap. This portion included several different commodities. The operation began when the assembler received his portion of the group recap. It included locating a dead skid, placing it on the low-lift truck and transporting it to the appropriate storage area. At that point, the warehouseman loaded the skid, then transported it to the order assembly area. In this case, there were five order-assembly areas to be serviced. The warehouseman would stop at each assembly area and stack on the floor as many items of each commodity as the recap indicated should be placed there. In some cases, the number of items called for at one assembly area might make it possible to place a full skid in that area. This cycle of activity continued until all the items listed on the recap had been assembled and placed in each order assembly area. The operation ended when the last package was placed in the last order assembly area and the low-lift platform truck set aside for later use. Seven assemblers were assigned to this operation. The nature of the operation was such that there was no time lost due to crew interference.

The labor required to assemble 1 ton of fresh fruits and vegetables amounted to 0.22 man-hour per ton when this system was employed. The breakdown of this time is shown below.

Time item	*Labor required (man-hours)*
Productive labor:	
1 man assembles 1 ton of fruits and vegetables when the distance from the order-assembly area to the storage area is 100 feet; when dead skids and low-lift platform truck are used	0.19
Cleanup	.03
Total labor	.22
Elapsed hours	.22

The average load size per skid was 0.44 ton. The cost of labor and equipment totaled $0.38 per ton as indicated in the tabulation that follows.

Method	*Elapsed time (hours)*	*Labor and equipment required*		*Labor and equipment costs*		
		Labor (man-hours)	*Equipment (machine-hours)*	*Labor (dollars)*	*Equipment (dollars)*	*Total (dollars)*
1 man assembles fresh fruits and vegetables when transportation distance from order-assembly area to storage areas is 100 feet	0.22	0.22	[1] 0.99	[2] 0.33	[3] 0.05	0.38

[1] 3.5 dead skids 0.77 machine-hour; electric low-lift platform truck 0.22 machine-hour; total 0.99 machine-hour.

[2] Based on an assumed labor rate of $1.50 per hour.

[3] It is estimated that 3.5 skids would be required for each ton assembled.

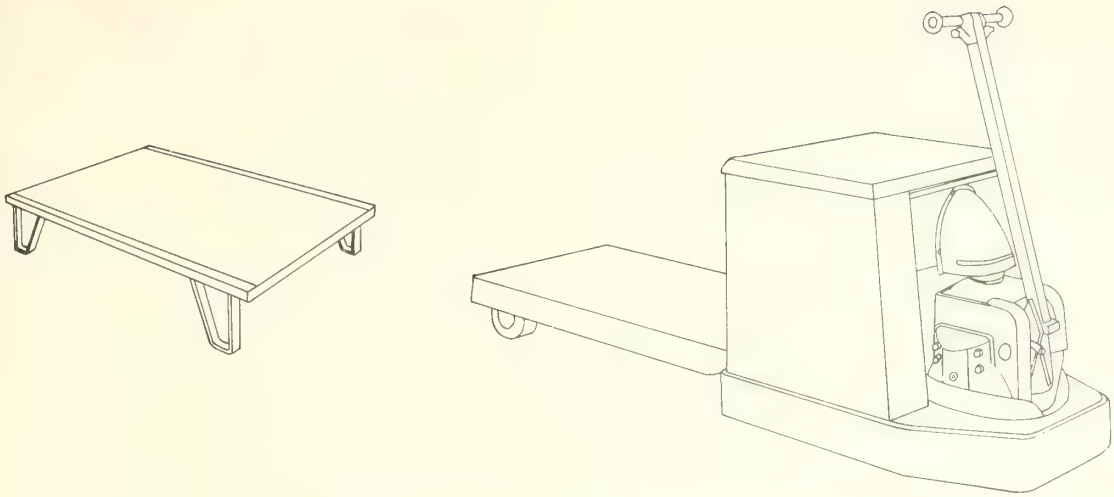

Figure 14.—Dead skid and electric low-lift platform truck.

Costs Associated With the Assembly Operation When Different Types of Equipment Are Used in Combination

The equipment types listed in table 1 have been divided into two groups. The first is for manual and the second for powered equipment. Within these groups, the combinations of equipment and the applicable recap type have been arranged in order of descending elapsed time. In general, when powered types of equipment are used the assembly of fruits and vegetables takes less elapsed time than that required for manual types. As a result, the cost of labor is less when powered equipment is used. However, because of the higher cost of owning, operating, and maintaining powered equipment, the advantage of the reduction in labor costs is partly overcome. For that reason, semilive skids and jacks in conjunction with a group recap system has the second best total cost picture at $0.46 per ton. The best system utilizes dead skids and electric low-lift platform trucks with a modified group recap. Costs total $0.38 a ton for assembly when that system is used.

In the section in which a description was given for each combination of equipment and recap system used, it was pointed out that the least efficient unit in a combination lowered the total productivity of the system. The larger the percentage of the total tonnage moved by the least

TABLE 1.—*Labor and equipment costs for assembling 1 ton of fruits and vegetables by combinations of equipment types* [1]

Equipment	Recap type	Elapsed time	Costs		
			Labor	Equipment	Total
		Hours	*Dollars*	*Dollars*	*Dollars*
Manual types:					
2-wheel clamp trucks and 2-wheel stevedore-type trucks.	No recap	0. 56	0. 84	0. 01	0. 85
2-wheel handtrucks; 4-wheel handtrucks; dead skids and low-lift platform trucks.	Truck recap	. 42	. 63	. 01	. 64
Semilive skids and jacks	Group recap	. 30	. 45	. 01	. 46
Powered types:					
Pallets (40- by 48-inch), electric pallet transporters and 4-wheel handtrucks.	Truck recap	. 31	. 47	. 05	. 52
Pallets (32- by 40-inch), electric fork trucks; and 4-wheel handtrucks.	No recap for 82% of tonnage; truck recap for 18%.	. 24	. 39	. 08	. 47
Dead skids and electric low-lift platform trucks.	Group recap with commodities offstacked by truck recap.	. 22	. 33	. 05	. 38

[1] Distance from assembly area to storage area 100 feet.

efficient unit, the lower the productivity of the system would be. In table 2 each equipment type is listed separately and arranged in descending magnitude of elapsed time. The purpose of this tabulation is to focus more attention on the performance of an individual piece of equipment, rather than on a combination of types. However, the following reservation must be considered in comparing equipment types in table 2. Different recap types are used for assembly and each one will affect the productivity of the system itself. For example, when pallets and fork trucks are used with no recap, unit load assembly procedure may be followed. When that is done, the number of handlings of each package is minimized. On the other hand, when pallets and pallet transporters are used with a truck recap assembly procedure, the number of handlings of each package is increased as well as the elapsed time per ton.

TABLE 2.—*Labor and equipment costs for assembling a ton of fruits and vegetables by individual types of equipment* [1]

Equipment	Type of recap	Tons per equipment load	Elapsed time	Labor and equipment required		Labor and equipment costs		
				Labor	Equipment	Labor [2]	Equipment	Total
			Hours	*Man-hours*	*Machine-hours*	*Dollars*	*Dollars*	*Dollars*
2-wheel stevedore handtruck	Truck	0. 10	0. 58	0. 58	0. 58	0. 87	0. 01	0. 88
2-wheel clamp truck	None	. 10	. 56	. 56	. 56	. 84	. 01	. 85
Semilive skids and jack	Group	. 44	. 30	. 30	[3] 1. 20	. 45	. 01	. 46
Pallets (40- by 48-inch) and industrial pallet transporter.	Truck	. 62	. 26	. 26	[4] . 91	. 39	. 06	. 45
Dead skids (36- by 54-inch) and manual low-lift platform trucks.	do	. 35	. 25	. 25	[5] 1. 00	. 38	. 01	. 39
4-wheel handtruck	do	. 44	. 25	. 25	[6] . 75	. 38	. 01	. 39
Dead skids (36- by 54-inch) and industrial low-lift platform truck (electric).	Group [7]	. 44	. 22	. 22	[8] . 99	. 33	. 05	. 38
Pallets (32- by 40-inch) and industrial forklift truck.	None [9]	. 35	. 15	. 15	[10] . 15	[11] . 26	. 10	. 36
Pallets (40- by 48-inch) and industrial forklift truck.	do [9]	. 60	. 10	. 10	[12] . 10	[11] . 18	. 07	. 25

[1] Distance from assembly area to storage area 100 feet.
[2] Labor rate is $1.50 per hour except as noted.
[3] Three semilive skids, 0.90 machine-hour; jack lift 0.30 machine-hour; total 1.20 machine-hours.
[4] 2.5 pallets 0.65 machine-hour; industrial pallet transporter 0.26 machine-hour; total 0.91 machine-hour.
[5] Three dead skids 0.75 machine-hour; manual low-lift platform truck 0.25 machine-hour; total 1.00 machine-hour.
[6] Three 4-wheel handtrucks total 0.75 machine-hour.
[7] Commodities are offstacked in order assembly areas by truck recap.
[8] 3.5 dead skids 0.77 machine-hour; industrial low-lift platform truck (electric) 0.22; total 0.99 machine-hour.
[9] Commodities are assembled in unit loads.
[10] Industrial forklift truck 0.15 machine-hour. Pallets are used once each night. Costs are allocated on a use basis, 2.9 pallet uses per ton are charged to this operation.
[11] Labor rate $1.75 per hour for forklift-truck operator.
[12] Industrial forklift truck 0.10 machine-hour. Pallets are used once each night. Costs are allocated on a use basis, 1.7 pallet uses per ton are charged to this operation.

The table includes a column indicating the load-carrying capacity of each equipment type studied. It is apparent from these figures that the greatest liability of the two-wheel handtrucks is their limited capacity. These trucks must make 10 round trips for each ton moved, whereas a system using 40- by 48-inch pallets would require only 1.67 trips per ton. This is the major factor in the high cost ($0.88 and $0.85) when 2-wheel handtrucks are used for assembling.

For the other types of equipment, the total cost decreases as the elapsed time decreases. The lowest cost system ($0.25 per ton), is the one which uses 40- by 48-inch pallets, fork-lift trucks and a no recap, unit load assembly system. In this case, maximum advantage is taken of minimizing the number of handlings of packages of produce in a warehouse. All commodities must be stored on pallets in the warehouse for this system to be successful.

In a later section, the best systems for assembly will be combined with the best systems for truckloading in order to get an overall cost picture for the loading-out operation.

Preparation of Split Packages

In the course of supplying the needs of both large and small retail food stores, most service wholesalers find it necessary to split some full packages into smaller units. Most of the fruit and vegetable items that are split are those that move through the retail stores in small volume or those that are highly perishable. Whatever the justification for providing this service, the extra work required makes it extremely costly. In some cases, the full package price is prorated over the number of smaller units made up. When that price policy is followed, the wholesaler gets no more for the several split packages than he would for the commodity in its original con-

tainer. In the other cases, a small additional charge is made for this added service. Although exact price figures are not available, it is doubtful that the service wholesaler fully recovers the added cost even with this extra charge.

Studies made of several split-package operations indicate that the tonnage of fruits and vegetables broken down into smaller units will account for from 1½ to 4½ percent of the total tonnage shipped out. The percent of split packages prepared will depend upon several factors. The number of small retail stores serviced would be one. The variety of packaged commodities that a service wholesaler agree to split will be another. The number of package sizes made up would also contribute to the total to some extent.

Time studies were made of several split package operations. The organization of these operations fell into two different categories. In one case, the job of making up split packages was assigned to two or more assemblers in addition to other assembly duties. In the other case, one man was assigned to the job and he was not given any additional duties until all of the repackaging work had been completed. The time requirement for each of these categories was substantially different. Illustrations of poorly organized split-package work areas are indicated in figures 15 and 16.

When Two or More Assemblers Split Packages in Addition to Their Other Duties

When two or more men split packages in addition to assembling whole packages for the truckloading operation, they were not able to organize their jobs very efficiently. In making up split packages, they would stop their other activity, get a 4-wheel handtruck, transport it to the storage area, pickup 1 or 2 full packages of produce, transport them to the split-package work station and set the packages on the table or floor adjacent to the station. They would then open the full packages, and make up a few split packages; they then returned to their other assigned duties. Performing the work in this manner required 5.02 man-hours (see tabulation that follows) for each ton of full packages of fresh fruits and vegetables to be packaged in smaller units.

Time item	*Labor required (man-hours)*
Productive labor:	
Preparation for split packages when 4-wheel handtrucks are used and transportation distance is 100 feet	1. 34
Make up split packages	3. 40
Cleanup	. 28
Total labor	5. 02
Elapsed hours	5. 02

When Packages Are Split by One Man

When one man was assigned to the split-package operation, he was able to bring from storage as many full packages as he felt he would need to make up the split packages that would be required for that night's operations. On some occasions, his estimate would prove to be low and during his shift, he would then have to supple-

BN 5675

Figure 15.—A poorly organized split-package work area.

BN 5669

Figure 16.—A poorly organized split-package work area.

ment his supply of full packages. By bringing up an adequate number of full packages before starting to make up the split packages, the number of trips to the storage areas was minimized. This man also was able to perform his work more efficiently because he worked at the job continuously. His supplies were readily available. He was able to develop a work routine that minimized the starting up and stopping that was typical of the operation described above. When the work was assigned in this way, it required 2.84 man-hours for each ton of full packages of fresh fruits and vegetables packaged in smaller units. The time values are indicated in the next tabulation. A well planned split package work area is indicated in figure 17.

Time item	*Labor required (man-hours)*
Productive labor:	
Preparation for split packages when 4-wheel handtrucks are used and the transportation distance is 100 feet	0. 49
Make up split packages	2. 07
Cleanup	. 28
Total labor	2. 84
Elapsed hours	2. 84

The high cost of this activity should inspire the service wholesaler to keep his split-package activities under careful control. He should set a definite limit on the number of packages of different commodities that he will break up into smaller units. His salesmen should be instructed not to accept orders for split units not included in that group. Once the group has been established, he should then limit the size of smaller units that are made up. For example, if one of the items to be made up into split packages is bell peppers, then the split-package size could be set at 5 pounds. Orders for 10 pounds of bell peppers would be filled by selecting 2 of the 5-pound units. Standardizing split-package sizes has two advantages. The first is that the job of making up one package size is simplified. Stamped bags can be provided and the workplace arranged to perform the job in the least amount of time. A second advantage is that once standard packages have been established, a large portion of the package-splitting job can be done in advance of the receipt of customer orders. Experience will establish a pattern of demand for these packages so that the number required can be anticipated. The number of packages made up in advance can be less than the average indicated by experience for a given night's business. When the actual orders are recapped, a few additional items can be made up. The main advantage of this latter procedure is to permit the man doing the repackaging job to put up all the units of bell peppers or lemons or any other item at one time. This will result in a more efficient and productive operation. It will also help to minimize shrinkage.

If the most efficient system is used, the labor and equipment costs for each ton of fresh fruits and vegetables made up into split packages is $4.38 (table 3). By comparison, when the least

BN 6902

Figure 17.—A well planned split-package work area.

efficient system for assembly is used, the costs (when no packages are split) amount to $0.88 per ton (table 2).

This indicates an added cost of $3.50 for each ton split. Other costs such as paper bags, stapling machines, stamps, and shrinkage are not included in this figure. These added costs underscore the fact that making up split packages is a costly operation. If competition and customer demand require that packages be split, the service wholesaler should make every effort to recover the cost of providing this service.

TABLE 3.—*Comparative labor and equipment costs to split 1 ton of full packages of fruits and vegetables into smaller units*

Method	Elapsed time	Labor and equipment required		Labor and equipment costs		
		Labor	Equipment	Labor [1]	Equipment	Total
	Hours	*Man-hours*	*Machine-hours*	*Dollars*	*Dollars*	*Dollars*
Package splitting as one of several assigned duties	5. 02	5. 02	[2] 15. 06	7. 53	0. 21	7. 74
Package splitting assigned as a continuous job	2. 84	2. 84	[3] 8. 52	4. 26	. 12	4. 38

[1] Based on an assumed wage rate of $1.50 per hour.
[2] Two 4-wheel handtrucks 10.04 machine-hours; table scale 5.02 machine-hours; total 15.06 machine-hours.
[3] Two 4-wheel handtrucks 5.68 machine-hours; table scale 2.84 machine-hours; total 8.52 machine-hours.

Cutting and Packing Bananas[1]

Most items are received in standard containers of uniform weight, and in condition for shipment to retail outlets. Bananas, however, are received green and in bunches which vary from 60 to 120 pounds in weight. Because they are received in a green condition, banana bunches are hung in ripening rooms until they reach the "breaking" stage of ripeness. They are then removed and delivered to a cutting-packing area, which is usually located nearby. Here, a worker cuts the hands from the stems and sets them down where they are available to packers. The hands may be broken into consumer size units, banded, or wrapped, before being packed into banana boxes. Packers place the hands in banana boxes to a predetermined weight, usually 40 pounds net, although some 20-pound boxes are packed. The box used is peculiar to bananas. The top dimensions are greater than the bottom, and when empty, the boxes nest compactly. When they are full, the handles are inverted and the boxes can be tiered, with the weight resting on the box handles rather than the fruit. As the boxes are packed, they are set either on a skid or pallet, or on the floor.

Since bananas normally are packed during the day, packed boxes must be placed in storage to await the assembly operation. This storage may be in a banana room where temperature and humidity can be controlled, or a corner of the banana-packing area. Skid and pallet loads are moved intact to storage; boxes stacked on the floor must be picked up by a hand or clamp truck, transported to storage, and released.

It is usually the function of the banana-packing crew to pack as many boxes as will be needed for the next loading-out operation. This number is not always known, in which case, the number packed is based on previous experience. It sometimes happens that the banana crew underestimates the needs, and the loading-out crew must pack some of the fruit.

Bananas are usually quite easy to assemble. They are packed in only 1 or 2 units, and are located in one place in the warehouse. These factors reduce much of the searching that occurs in the assembly of other items. Also, it is not necessary to handle each banana box individually. Skid or pallet loads are assembled intact, and single stacks are easily picked up by either stevedore-type 2-wheel handtrucks or clamp-type 2-wheel trucks.

The banana-packing area is often some distance from the order assembly area, so that the transportation distance for each trip is likely to be greater than for other commodities.

Loading Trucks

When the order-assembly area is stocked with enough packages of each commodity to fill the orders for one truck route, the truckloading operation can begin. If a truck recap is used as a basis for the assembly operation, all items called for on that recap must be in the order assembly area before the orders for that route can be loaded. In the large majority of cases, when a truck recap is used, the checker or foreman will check all the items placed in the order assembly area against the truck recap. This is frequently called a "doublecheck." Most service wholesalers using this method, feel that they can effectively eliminate pilferage by making that check as well as having a positive verification that all the items their customers ordered are loaded on the trucks. It also assures that the truckloading operation is performed without interruption. Packages missing from the order-assembly area are brought up before the truckloading begins. When this is done, a crew of 4 or more men is not delayed waiting for 1 or 2 missing packages to be brought from storage to the order assembly area. In some cases, the assembly of commodities for the second truckload continues during the loading of the first truck. In other cases the assembly crew shifts over to truckloading and then returns to assembling the items for the second truck.

When a master recap is used, all the items are placed in the order assembly area prior to the truckloading operation. A doublecheck can be made of the assembled items, but the accuracy of items loaded on an individual truck cannot be assured. The check of the items does assure a smooth uninterrupted truckloading operation. When a large volume of business is done by a service wholesaler he may find it necessary to use a group recap instead of a master recap for his assembly operation. The practical reason for this is that it would not be possible to provide enough floor space to stack all the items to be shipped out during one night's operations. To get the best use of the floor area, a group recap of several trucks from the night's total is made instead of a complete master recap. The check on the group recap has the same limitation as a master recap, as well as the same advantage in relation to truckloading. One crew may be used

[1] Andrews, B. G. and Burt, S. W. Methods, Equipment, and Facilities for Receiving, Ripening, and Packing Bananas. Marketing Research Report No. 92, Agricultural Marketing Service, U. S. Department of Agriculture, 127 pp., 1955.

to assemble and load or two crews may be assigned so that this work can be done concurrently.

When commodities are assembled on pallets or skids without regard to use of a recap, the order assembly area is stacked with enough packages of each commodity to assure a smooth uninterrupted truckloading operation. Where large volumes of one commodity are used, the assembler has to replenish the stock in the order assembly area during the night's activities.

When this system is used, no check is made on the total number of items assembled. Any surplus packages are returned to storage at the close of the night's work. With this system, the assembly work is performed concurrently with the truckloading.

Several types of handling equipment can be used to load trucks. Two-wheel clamp trucks, pallets, and electric pallet transporters, and belt conveyors were studied in order to compare their labor requirements and costs.

Two-Wheel Clamp Trucks

Two different systems for using two-wheel clamp trucks were studied. In one case, the assembly and truckloading operations were performed by the same man in a continuous cycle. In the second case, the assembly operation was completed first and then truckloading began.

The assembly operation for the first system has been described in an earlier section. In summary, however, the warehouseman is assigned items to assemble by the checker. He picks these items up in the warehouse at their regular storage points and then returns to the checking point. On arrival at this point, the truckloading operation begins. It includes calling off the items in the load to the checker, transporting the load into the truck, releasing the load and the handtruck, picking up the packages and storing them in the truck (fig. 18), grasping the handtruck and transporting it to the checking point. This operation ends when the truckloader reaches the checking point.

The checker's duties consist of calling out the items listed on customer invoices with the invoices having been previously arranged so that the last order to be delivered is loaded first. Calling out the items is the assignment of work to an assembler. In selecting the items to call, the checker scans through 2 or 3 invoices and groups items that would be located in the same storage area. The checker also checks off on the invoices each item that is called. In addition, when the assembler-truckloader returns with the items and calls them out, he cross checks the items previously marked. It is also his job to look at the items on the handtruck to see if they are correct. The checker's duties also include supervising all the activities associated with assembly and truckloading.

BN 5659

Figure 18.—Truckers stowing packages in truck.

The trucks loaded in this system were well filled in almost every case. Part of the tonnage loaded in the trucks was transported on two-wheel handtrucks. This equipment was used to transport commodities in sacks, since clamp trucks could not be used effectively for them. The average crew assigned to this work was composed of 1 checker and 5 assembler-truck-loaders. With this size crew there was no interruption of work due to crew interference.

Tables 4 and 6 show the man-hour requirement per ton for this system was 0.36 and the total cost per ton was $0.57.

In the second system, the crew consisted of 1 checker and 2 loaders. The truckloading operation began when the checker called out several items listed on customer invoices. It included the time required by the truckloader to listen to the checker's call, transporting the two-wheel clamp truck to the order assembly area, locating the items (fig. 19), clamping onto them with his truck, transporting them to (fig. 20) and into the truck, releasing the load intact and in position in the truck (fig. 21), or stowing the packages by hand and returning to the truck platform with the clamp truck. This operation ends when the checker calls the next items to be loaded.

This cycle of activity continued until the truck was fully loaded. Before loading began it was necessary to position a bridgeplate to span the gap between the platform and the truck (fig. 22). When the truck was loaded, the bridgeplate was removed and set aside. The checker's duties were the same as those described in the first system.

The trucks studied at this warehouse were not loaded to capacity. It was possible therefore to release most clamp-truck loads intact in each truck. The total cost per ton that resulted from the use of this system was $0.58 (table 6). The man-hour requirement was 0.36 per ton (table 5).

TABLE 4.—*Labor requirements to load a delivery truck with 1 ton of fresh fruits and vegetables when 2-wheel clamp trucks, 2-wheel handtrucks, and a 6-man crew are used* [1]

Time item	Crew	Labor required
Productive labor:		*Man-hours*
Setup and cleanup	5	0.01
Transport to and release in truck	5	.13
Stow in truck	5	.16
Check	1	[2] .06
Total labor	6	.36
Elapsed hours		.06

[1] Crew organization: 1 man checks, 5 men transport commodities to truck, release and stow them in truck.
[2] The checker's time is based on the elapsed time required for the crew.

TABLE 5.—*Labor requirements to load 1 ton of fresh fruits and vegetables on a delivery truck when 2-wheel clamp trucks, an order-assembly area, and a 3-man crew are used* [1]

Time item	Crew	Labor required
Productive labor:		*Man-hours*
Setup and cleanup	2	0.01
Clamp on packages, transport 35 feet to, release and stow in truck	2	.23
Check	1	[2] .12
Total labor	3	.36
Elapsed hours		.12

[1] Crew organization: 1 man checks; 2 men setup and cleanup, clamp on packages, transport to, release and stow commodities in truck.
[2] The checker's time is based on the elapsed time required for the crew.

BN 5667

Figure 19.—Truckloaders selecting packages from order-assembly area.

BN 5672

Figure 20.—Truckloader transporting commodities to the delivery truck. Checker in background.

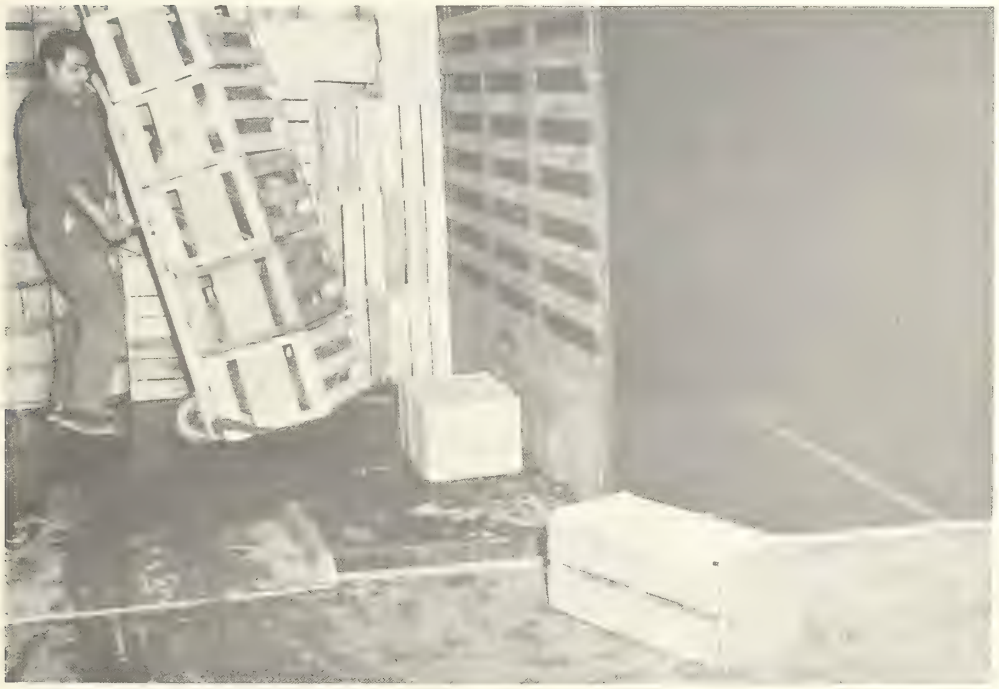

BN 5670

Figure 21.—Truckloader preparing to release load in truck.

TABLE 6.—*Comparative labor and equipment costs to load 1 ton of fresh fruits and vegetables on a deliver truck when 2-wheel clamp trucks are used*

Method	Elapsed time	Labor and equipment required		Labor and equipment costs		
		Labor	Equipment	Labor	Equipment	Total
	Hours	*Man-hours*	*Machine-hours*	*Dollars*	*Dollars*	*Dollars*
6-man crew load truck as a part of a continuous assembly and truckloading cycle	0. 06	0. 36	[1] 0. 36	[2] 0. 56	0. 01	0. 5
3-man crew load truck when an order-assembly area is used	. 12	. 36	[3]. 36	[4]. 57	. 01	. 5

[1] 2-wheel stevedore-type handtrucks were used to handle commodities that came in sacks. These commodities accounted for 30 percent of the total by weight. 1.5 stevedore-type handtrucks 0.09 machine-hour; 3.5 clamp trucks 0.21 machine-hour; steel bridgeplate 0.06 machine-hour; total 0.36 machine-hour.

[2] Based on an assumed wage rate of $1.50 per hour for truckloaders and $1.75 per hour for the checker. 0.30 hour at $1.50 plus 0.06 hour at $1.7 equals $0.56.

[3] Two 2-wheel clamp trucks 0.24 machine-hour; steel bridgeplate 0.1 machine-hour; total 0.36 machine-hour.

[4] 0.24 hour at $1.50 and 0.12 hour at $1.75 equals $0.57.

BN 5677

Figure 22.—Bridgeplate in position on partly loaded truck.

Pallets and an Electric Pallet Transporter

Pallets and an electric pallet transporter were used in an effort to find a new system for truckloading that might reduce the cost of performing that operation. Agricultural Marketing Service research personnel, a service wholesaler and an equipment manufacturer cooperated in the development of this system. Several materials-handling principles were incorporated in the procedure followed. One was the use of unit loads, another was the reduction in the number of handlings, and still another was minimizing the crew size to eliminate crew interference and to increase productivity.

A one-man crew was set up. This arrangement eliminated the need for a checker and for other crewmen usually required with other types of equipment. In order to accomplish this, a spread stand was built and attached to the pallet transporter (fig. 23). The stand had a pegboard strip attached to it so that the truckloader could spread out the customer invoices for a particular truckload. Two sets of preprinted invoices were used so that each could be folded in half. One set was placed at the top of the stand with the left half of the invoices exposed. The other set was placed on the lower half of the stand with the right half of the invoices exposed. A customer's invoice on the upper half of the stand was placed directly above the same customer's invoice on the lower half. Scanning both of them, the truckloader

BN 5662

Figure 23.—Pallet transporter with spread stand attached.

was able to get a complete picture of the customer's order (fig. 24). In addition to this, the customer's orders were arranged so that the first order to be loaded (which would be the last one delivered) was placed on the left and the others in sequence to the right. The invoice on the extreme right would be the last one loaded, but the first one delivered.

Several pallet sizes were tried in the course of developing this loading system. The first was a 40- by 48-inch pallet. This particular size was selected to make maximum use of the space avail-

BN 5668

Figure 24.—Truckloader scanning the invoices for additional items required to complete pallet load.

able in the delivery truck and to minimize the number of pallet loads that had to be built. Once a pallet load was built, it was transported into the truck and set down with the load intact. It was found that the 40- by 48-inch pallet made it difficult for the truckdriver to locate packages in order to make a specific delivery. With 6 pallet loads per truck it was necessary to have an average of 3 customer orders per pallet. With this size pallet, and in order to build a stable load, approximately one third of the pallet load was hidden from the driver's view. When the truck was fully loaded only one side of the pallet load was exposed. The pallets were placed 2 abreast and 3 deep in the truck. In order to alleviate the driver's problem, 32- by 40-inch pallets were tested. Eight of these pallets were used per truckload, and the data included in this report are based on the results using that size pallet.

The order assembly area used was set up on the basis of a group recap. Skid loads of commodities were placed in the area in a predetermined sequence. The sequence was such that when the warehouseman started through the area with an empty pallet on transporter, the first commodities reached were those that could be placed at the bottom of the load without being damaged, i. e., potatoes, onions, commodities in woodboxes, etc. As he progressed through the area, he could reach the items that could be built into the middle of the load—lettuce, corn, carrots, citrus fruit, and others. As he reached the end of his circuit through the area, he would come to the weaker containers and commodities most subject to damage—tomatoes, split packages, soft fruits, etc.

The procedure followed by the truckloader in this system was to position a bridgeplate between the dock and the truck and fasten it in place. The next step was to obtain the invoices required for that route and spread them out in proper order on the invoice stand affixed to the pallet transporter. He would then place an empty pallet on the transporter and move it to the starting point in the order assembly area. At that point he would scan his invoices and estimate how many of them he would have to combine to make up a load for that pallet. Once he had made that decision, he started to select the packages called for on the invoices. He placed them on the pallet so that each layer presented a reasonably horizontal surface to build the next layer of packages on (fig. 25). This procedure was continued until the pallet was fully loaded. In the course of building the load, he would move the pallet from one storage point to the next in the order assembly area. When the load was complete, the pallet was moved into the truck and positioned in the front of the truck and to one side. The pallet was then set down in the truck with the load intact (fig. 26). The warehouseman moved the transporter back into the warehouse, got a second empty pallet, loaded it, and set it in the truck beside the first. This cycle was repeated until eight loaded pallets were in position on the truck. When the truck load exceeded 5 tons, it was sometimes necessary to fill in the voids between and above pallet loads. This was done by placing a number of packages on a pallet, transporting the loaded pallet to the truck, and stacking the packages in the truck. Less than 5 percent of the tonnage was handled in this manner. When the truck was fully loaded, the bridgeplate was removed, the truck moved out and an empty truck backed into position. This system resulted in a man-hour requirement of 0.37 per ton and a total cost of $0.65. These figures are developed in the tabulations that follow.

Time item	*Labor required (man-hours)*
Productive labor:	
Setup and cleanup	0.05
Load pallet, transport to, and set in truck	.31
Load pallet, transport to, and offstack in truck	.01
Total labor	.37
Elapsed hours	.37

Method	*Elapsed time (hours)*	*Labor and equipment required*		*Labor and equipment costs*		
		Labor (man-hours)	*Equipment (machine-hours)*	*Labor (dollars)*	*Equipment (dollars)*	*Total (dollars)*
1 man builds load on pallets in order-assembly area, transports loaded pallet and sets intact in truck	0.37	0.37	[1] 0.74	[2] 0.56	0.09	0.65

[1] Pallet transporter, 0.37 machine-hour; magnesium bridgeplate, 0.37 machine-hour; total 0.74 machine-hour. Pallets are used once each night. Costs are allocated on a use basis. 1.7 pallet uses per ton are charged to this operation.

[2] Based on an assumed wage rate of $1.50 per hour.

The use of pallets for truckloading has its advantages and its disadvantages. The advantages include the fact that each individual truck loading job can be assigned to one man. It also reduces the number of handlings of the packages because once they are placed on the pallet, they are not touched again. One man can be assigned responsibility for the accuracy of each load.

The disadvantages are largely related to the fact that an average truck load has 20 different customer orders on it. This means that each

BN 5664

Figure 25.—Building a load on a pallet.

pallet load has an average of two orders. In some cases, there might be one-half an order to a pallet. In other cases, there might be as many as six. When a single large order was loaded on a pallet, the job of building a load was fairly simple. Load stability was easy to achieve. However, these loads were the exception. So that when two or more small orders were loaded on a pallet, the job of selecting packages to build an integrated stable load was more difficult and took considerably more time. Another disadvantage is the fact that some truck capacity

BN 5665

Figure 26.—Loaded pallets in position in the truck.

is lost as a result of the space taken up by the pallet and the space left between the top of the load and the roof of the truck. This system would be an efficient one for those service wholesalers who have no more than six customers' orders per truck. With 6 orders or less, 40- by 48-inch pallets could be used and the job of pallet loading would be simplified.

Motorized Belt Conveyors

Belt conveyors are widely used in the industry to load fruits and vegetables on delivery trucks. In most warehouses, the conveyor is placed at right angles with the truck dock. It extends back into the warehouse a distance equal to its length. The order assembly area is divided into two equal parts by the conveyor. Working aisles, at least 24 inches wide, are provided for on each side of the conveyor. The commodities are arranged adjacent to the aisles and extend the full length of the conveyor (fig. 27). Other conveyor arrangements are used, depending upon their length and the availability of space within a particular warehouse facility. Three different crew sizes were studied in the course of the research work. Each crew and conveyor arrangement has been described separately.

Four-Man Crew

One service wholesaler assigned four men to the job of truckloading with a belt conveyor (fig. 28). The conveyor extended 52 feet into the warehouse. It was placed in the center of the order assembly area. Commodities were arranged on each side of the conveyor in the same order in which they would be listed on the invoices. Ten commodities accounting for two-thirds of the volume shipped out, were placed closest to the tailgate of the truck, and arranged along the length of the conveyor. Approximately equal tonnages of commodities were placed on each side of the conveyor belt. The assembly operation was completed in conformance with a master recap. All the commodities to be shipped were in the assembly area prior to the start of truckloading.

The 4-man crew had the following job assignments: one man served as the checker; 2 men were stationed along the belt with 1 on each side; and 1 man was in the truck at the head end of the conveyor.

The conveyor was mounted on grooved steel wheels that rolled on a track. When the truck was backed into position, the entire length of conveyor was moved forward and into the truck. The front section of the conveyor was cantilevered so that it extended to within 5 or 6 feet of the front of the truck.

When the conveyor was in position and the belt started, the checker would call off items from his stack of routed invoices. The men on the belt would find the called items that were located on the side of the conveyor where they were stationed. They would pick up the package and place it on the moving belt. When that package reached the head of the conveyor, the man in the truck picked up the package and stowed it in place in the truck. This procedure was continued until the truck was fully loaded.

The checker was responsible for the supervision of the truckloading operation in addition to his duties of calling off items listed on the invoices, checking the package placed on the belt against the item called for, and also for

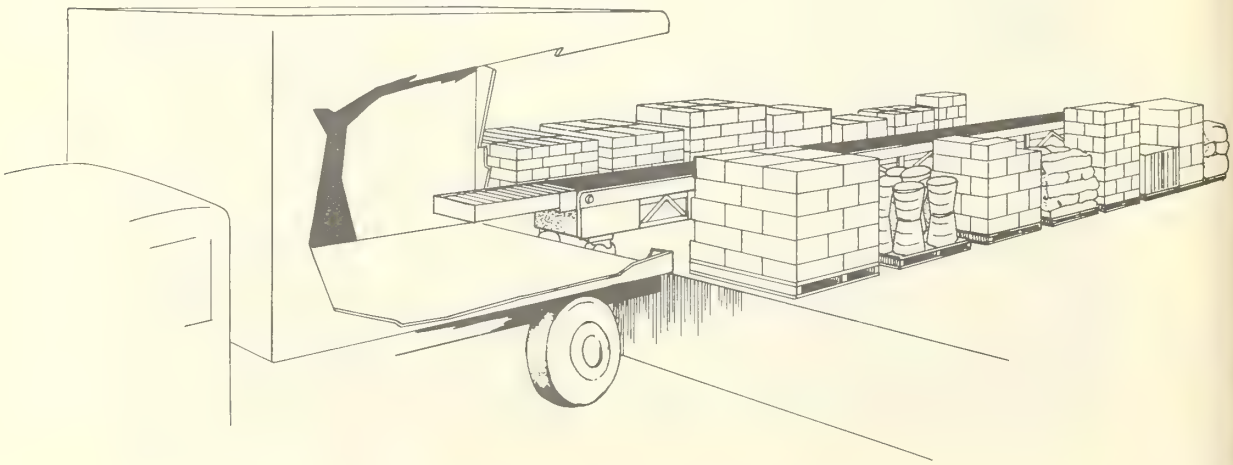

Figure 27.—A typical belt-conveyor installation.

BN 5671

Figure 28.—A four man crew loading a truck.

checking the progress of the load in the truck. The total man-hour required per ton was 0.40 with an elapsed time of 0.10 hour (table 7).

TABLE 7.—*Labor requirements to load 1 ton of fresh fruits and vegetables on a delivery truck when a 52-foot conveyor belt and a 4-man crew is used* [1]

Time item	Crew	Labor required
Productive labor:		*Man-hours*
Setup and cleanup	3	0.01
Place packages on belt	2	.13
Stow packages in truck	1	.08
Check	1	[2] .10
Total productive labor		.32
Unproductive labor:		
Man in truck waits for work	1	.02
Job regulated wait time for men working belt	2	[3] .06
Total unproductive labor		.08
Total labor	4	.40
Elapsed hours		.10

[1] Crew organization: 3 men setup and cleanup; 2 men place packages on belt; 1 man stows packages in truck; 1 man checks.
[2] The checkers time is based on the elapsed time required for the crew.
[3] Job regulated wait time of 0.06 man-hour was determined through time-study measurement.

Six-Man Crew

Another service wholesaler assigned six men to the truckloading operation in conjunction with the use of a belt conveyor. Figure 29 illustrates the arrangement of the conveyor in the warehouse. The order assembly area was built around the conveyor. All of the commodities were brought up on pallets and in unit loads. In order to have all the required pallets adjacent to the conveyor, it was necessary for the conveyor to be 96 feet in length. The portion of the conveyor at right angles with the truck dock was mounted on grooved steel wheels, which in turn were mounted on a floor track. This section of the conveyor line was 46 feet long including roller conveyor extensions.

The crew assignments were as follows: three men were assigned to the job of belt loading, 2 were assigned to stow packages in the truck, and 1 man checked. The work performed in loading the truck was the same for this crew as for the four-man crew. The greater the belt length and the manner in which it was positioned made it practical to have three men work the belt. Two men were required in the truck for crew balance.

When the operation began, 4 men pushed the 46-foot length of conveyor into the truck. The cantilevered front section extended far enough into the truck so that it was within 5 feet of the workface. As the truck was loaded, the conveyor was moved out approximately 3 feet at a time to clear the working area in the truck.

When more than one man placed packages on the belt as directed by the checker, it was difficult to avoid delays. These delays were caused in two ways: First, the checker might not call the

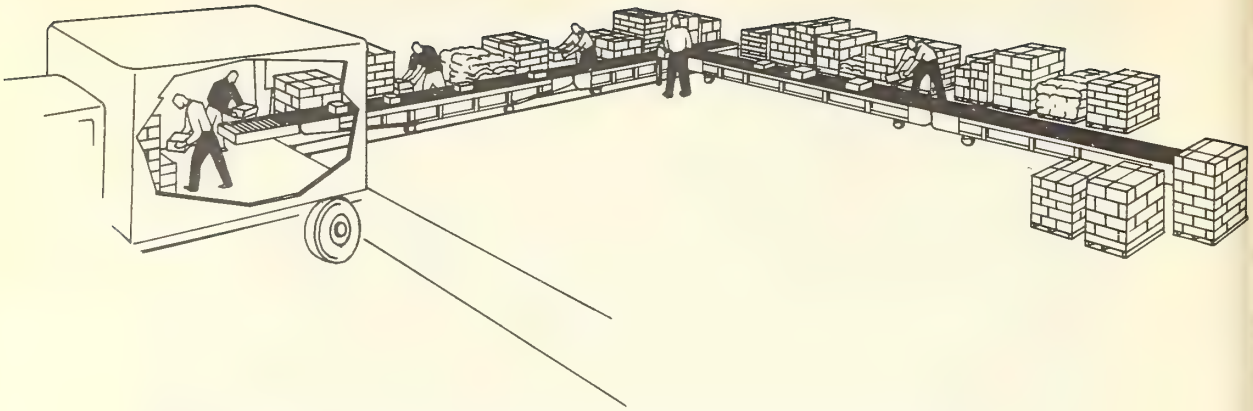

Figure 29.—A diagram of the belt-conveyor arrangement when a six-man crew was used.

items as soon as he could. For example, when he called items that one man was assigned to locate, he could wait until that man started to place those packages on the belt before he called out an assignment for the second or third man. When that happened, 2 men were idle for a longer period of time than necessary; and second, there was only 1 belt to place packages on. Frequently one man, who had a package in his hands to place on the belt, had to wait for a clear section of belt on which to set it. An effort was made to leave space between packages so that the men in the truck could handle the packages easily when they got to the truck end of the conveyor.

The checker's effectiveness in assigning work had a noticeable effect on these delays or job regulated wait time. The checker working with the six-man crew did an unusually good job, and waiting time was held to a minimum.

The time studies taken in this operation indicated a man-hour requirement of 0.36 per ton. The elapsed time was 0.06 hour per ton (table 8).

TABLE 8.—*Labor requirements to load 1 ton of fresh fruits and vegetables on a delivery truck when a 96-foot conveyor belt and a 6-man crew is used* [1]

Time item	Crew	Labor required
Productive labor:		*Man-hours*
Setup and cleanup	4	0.03
Place package on belt	3	.11
Stow package in truck	2	.08
Check	1	[2] .06
Total productive labor		.28
Unproductive labor:		
Job regulated wait time	3	[3] .05
Men in truck wait for work	2	.03
Total unproductive labor		.08
Total labor	6	.36
Elapsed hours		.06

[1] Crew organization: 4 men setup and cleanup; 3 men place packages on belt; 2 men stow packages in truck, 1 man checks.
[2] The checker's time is based on the elapsed time required for the crew.
[3] Job regulated wait time of 0.05 was determined through time-study measurements.

Two-Man Crew

In another warehouse operation, a service wholesaler used four major truckloading stations. Each station utilized two lengths of conveyor. The longer of the two was parallel to the truck dock and against a warehouse outer wall, leaving one side available for loading (fig. 30). The shorter section was perpendicular to the dock. It was mounted on rails so that it could be extended into the truck during the loading operation. An electric motor drive was geared to the conveyor so that the conveyor was moved into and out of the truck by electric power.

In an effort to reduce the cost of truckloading, United States Department of Agriculture researchers in cooperation with this service wholesaler developed a new system of operation.[2] This system has been in effect now for over 5 years. Data on its effectiveness are included here for comparative purposes. The cost figures used have been based on current labor and equipment charges.

The principal change made in this system over those described earlier was the elimination of the checker. This was accomplished by recording the items, normally called out by the checker, on a plastic belt. When a complete truckload had been recorded, the belt was taken out to warehouse personnel. The belt was inserted in

[2] Kercho, M. R., Herrick, J. F., Jr., and Burt, S. W. Use of Recording and Transcribing Equipment in Loading Delivery Trucks of Produce Wholesalers Agriculture Information Bulletin No. 43. U. S. Department of Agriculture, 20 pp., 1951.

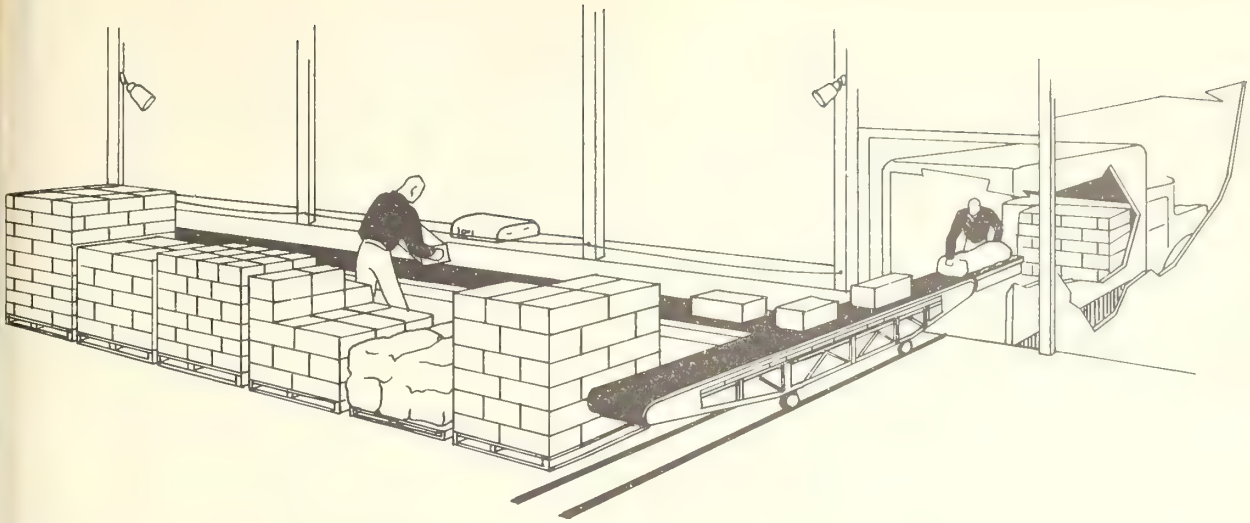

Figure 30.—Transcriber and belt-conveyor installation.

a transcriber which was hooked up to two loudspeakers. The time requirements for the recording operation amounted to 0.03 man-hour and 0.03 machine-hour per ton. The cost per ton is $0.06 for labor and equipment. There was one transcriber and a set of speakers for each truck-loading station. The man assigned to placing packages on the belt would pull a cord which started the transcriber. When he had heard as many items as he could remember, he released the cord and stopped the transcriber. He then placed the packages on the belt as required. This cycle of starting and stopping the transcriber and placing packages on the belt was repeated until the truck was fully loaded. With this procedure, and a two-man crew, it was possible to perform this operation in a very efficient manner. The second member of the crew stowed packages in the truck (fig. 31). When a 2-man crew used this equipment, the man-hour require-

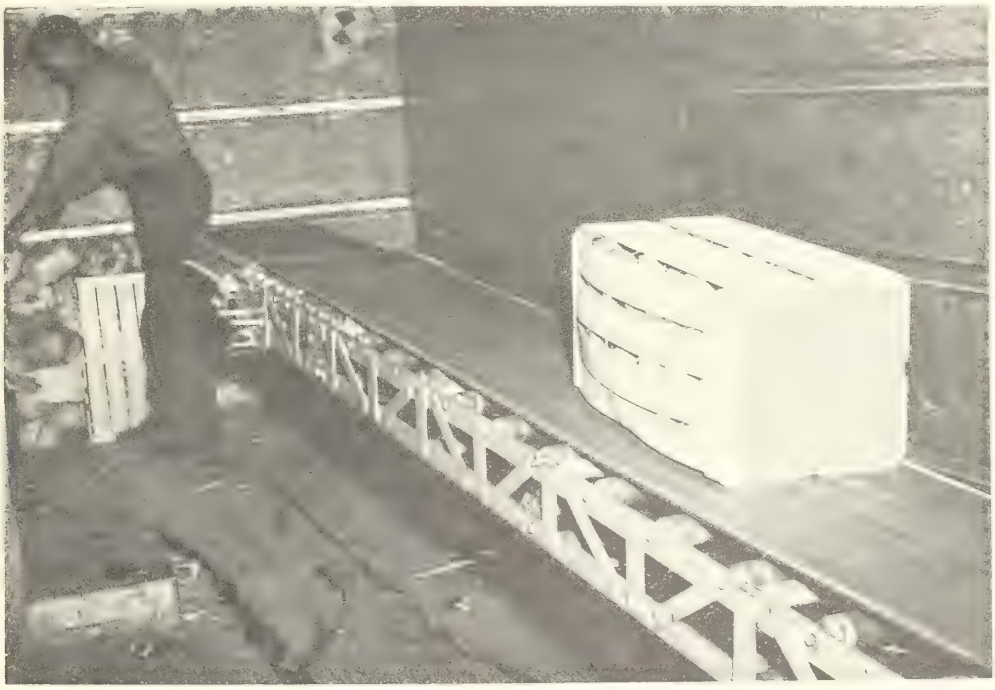

BN 5678

Figure 31.—A worker stowing packages in a truck.

ment per ton was 0.24; the elapsed time, 0.12 hour (table 9).

TABLE 9.—*Labor requirements to load 1 ton of fresh fruits and vegetables on a delivery truck when a conveyor belt, a transcriber, and a 2-man crew is used* [1]

Time item	Crew	Labor required
Productive labor:		*Man-hours*
Setup and cleanup	1	0.01
Place package on belt	1	.11
Stow package in truck	1	.08
Total productive labor		.20
Unproductive labor: Man in truck waits for work	1	.04
Total unproductive labor		.04
Total labor	2	.24
Elapsed hours		.12

[1] Crew organization: 1 man setup and cleanup; 1 man place package on belt; 1 man stow package in truck.

Two important labor saving contributions resulted from this system. The elimination of the checker and the elimination of job-regulated wait time. The latter was effected because there was only one belt loader in the operation.

A question might be raised as to who verified that the correct package was placed on the truck. In this particular warehouse, a group recap was used to assemble items for the four order-assembly areas. However, when the men doing the assembly work reached an order assembly area, they stacked items in that area on the basis of a truck recap. In other words, when the assembly operation was complete, each order assembly area had in it only those items that would be loaded on one truck. Since the identity of these packages with a particular truck was made possible, a doublecheck was made of the items placed in each area. This eliminated the need for the inspection of packages on the belt that is usually performed when a checker is a part of the operation. Actually, a third check was possible in this system because when the truck was loaded, leftover packages would have indicated an error. Had a package been missing from the area, an error would also have been indicated. In most cases, these errors could be traced to errors in recapping.

Table 10 lists the costs associated with loading trucks when belt conveyors and various crew sizes are used. The crew sizes are arranged in the order of decreasing total cost per ton. The 4-man crew using a 52-foot belt conveyor incurred a cost of $0.66 per ton. The 6-man crew, which loaded a ton in the least elapsed time had a total cost of $0.59 a ton. The lowest cost truckloading system was the one in which transcribers were used instead of a checker. The crew had 2 men in it and the belt conveyor was 52 feet long. The total cost was $0.46 per ton which includes the cost of recording the invoice items on a belt.

TABLE 10.—*Comparative labor and equipment costs to load 1 ton of fresh fruits and vegetables on a delivery truck when a conveyor belt and various crew sizes are used*

Crew	Length of conveyor	Elapsed time	Labor and equipment required		Labor and equipment costs		
			Labor	Equipment	Labor	Equipment	Total
	Feet	*Hours*	*Man-hours*	*Machine-hours*	*Dollars*	*Dollars*	*Dollars*
4 men	52	0.10	0.40	0.10	[1] 0.63	0.03	0.66
6 men	96	.06	.36	.06	[1] .56	.03	.59
2 men	52	.12	.24	[2] .24	.36	.04	.40
Record invoices on belt	--------	.03	.03	.03	.05	.01	.06

[1] Based on an assumed wage rate of $1.50 an hour for belt loaders and truck stowers and $1.75 an hour for checkers.

[2] Belt conveyor 0.12 machine-hour; transcriber 0.12 machine-hour; total 0.24 machine-hour.

In order to determine which crew-convevor arrangement results in the lowest cost per ton for all operations, it is necessary to combine the costs of assembly with that of truckloading. This combination of operations is described in the section on assemble and load trucks. It can be pointed out here however, that the system using 6 men and a 96-foot belt conveyor was tied in with the use of an assembly system in which no recap was used and all commodities were moved to the order assembly area on pallets and in unit loads.

The lowest cost system shown in table 10 was the one in which commodities were organized in the assembly area on a truck recap basis. Items in the area were doublechecked. To overcome the disadvantage of a higher elapsed time per ton for this system, one or more additional conveyor lines would have to be set up.

A comparison of all the systems and materials-handling equipment studied indicates a range of cost from $0.46 per ton for the lowest to $0.66 per ton for the highest. In each case, the equip-

ment was used in the most efficient way possible under the requirements of the business with which it was associated. On the basis of the data shown in table 11 it is apparent that when transcribers are used in conjunction with belt conveyors for the truckloading operation, the cost is minimized. A service wholesaler doing an average daily business of 100 tons using that equipment would save $11 a day over the next cheapest method. Over a period of a year, the saving would amount to $2,750. If the lowest cost method is compared with the highest cost, the possible daily savings would be $20 and the annual savings, $5,000.

TABLE 11.—*Comparative labor and equipment costs to load 1 ton of fresh fruits and vegetables on a delivery truck by use of specified types of materials-handling equipment*

Equipment	Crew size	Elapsed time	Labor cost	Equipment cost	Total cost
	Number	*Hours*	*Dollars*	*Dollars*	*Dollars*
Belt conveyor—52-foot length	4	0. 10	0. 63	0. 03	0. 66
Pallets and an electric pallet transporter	1	. 37	. 56	. 09	. 65
Belt conveyor—96-foot length	6	. 06	. 56	. 03	. 59
2-wheel clamp trucks—loading truck from an order-assembly area	3	. 12	. 57	. 01	. 58
2-wheel clamp trucks—loading truck is a part of a combined assembly and truckloading operation	6	. 06	. 56	. 01	. 57
Belt conveyor—52-foot length and transcriber system	2	. 12	. 36	. 04	. 40
Record invoices on belt	1	. 03	. 05	. 01	. 06

Assemble and Load Trucks

In the first two sections, assembly and truckloading were discussed separately to determine the relative cost associated with each method and type of equipment for each operation. With the exception of one of the systems using two-wheel clamp trucks, the work of assembly and truckloading can be completed independently of each other; but the assembly work has to be completed in whole or in part before the truckloading operation can begin.

Service wholesalers must decide which assembly method they want to use. Some feel very strongly that assembly should be on a truck recap basis so that an accurate check can be made on all commodities shipped. With that check, the wholesalers believe that they can assure their customers that they will get exactly what they order. It also can be used to minimize pilferage. Other wholesalers think that they can maintain all the control they need by using a group recap system or by moving commodities into the order assembly area in unitized pallet or skid loads without regard to a recap.

The equipment and method used to load trucks requires another decision on the part of the wholesaler; but there are fewer variations in methods and equipment used for truckloading than for assembly. Every service wholesale business requires that both operations be performed. The total costs for these combined activities are indicated in table 12.

In combining the costs of these operations it was necessary to select the assembly operation that could be used in conjunction with a particular truckloading operation. For example, when a belt-conveyor transcriber system was studied, it was based upon segregating the commodities by individual trucks. The assembly procedure selected was one in which a group recap was used but the commodities were offstacked by truckload in the assembly area. In another case, a 96-foot belt conveyor was available, and it was assumed that commodities were assembled in unit loads.

It was further assumed that the assembly and truckloading operations were performed concurrently. In some cases the crew sizes shown in table 12 have been increased over those indicated in the tabulations or tables presented earlier in the text. This was done in order to have the assembly and truckloading operations completed in the same elapsed time, or approximately so.

Assembly and truckloading can be performed independently of each other. In each system, except the one employing two-wheel clamp trucks, the assembly operation must be scheduled to start in advance of truckloading. For that reason any idle time that may occur as a result of an imbalance in elapsed times will be negligible.

The highest cost per ton occurred where two-wheel clamp trucks were used in a continuous cycle to assemble commodities called for by a checker and to transport them, on completion of assembly, directly into the truck where they were stowed. A total of six men, including the checker were assigned to this work. The items were never removed from the equipment until the load was placed in the truck. The total cost per ton for performing the operation in this way was

TABLE 12.—*Comparative labor and equipment costs to assemble and load 1 ton of fresh fruits and vegetables on a delivery truck when various methods and types of materials-handling equipment are used*

Method and equipment	Crew size	Elapsed time	Labor cost	Equipment cost	Total cost
	Number	*Hours*	*Dollars*	*Dollars*	*Dollars*
2-wheel clamp truck—assemble and load truck in 1 continuous cycle by each man	6	0.15	1.40	0.01	1.41
Semilive skids and jacks; 52-foot belt conveyor—group recap:					
Assemble	3	.10	.45	.01	.46
Load truck	4	.10	.63	.03	.66
Total			1.08	.04	1.12
Dead skids; electric low-lift platform truck; 2-wheel clamp truck—group recap offstacking by truck recap:					
Assemble	2	.11	.33	.05	.38
Load truck	3	.12	.57	.01	.58
Total			.90	.06	.96
Pallets (40- by 48-inch), electric forklift trucks; pallets (32- by 40-inch), electric pallet transporters—no recap:					
Assemble	1	.10	.18	.07	.25
Load truck	4	.09	.56	.09	.65
Total			.74	.16	.90
Pallets (40- by 48-inch), electric forklift truck; 96-foot belt conveyor—no recap:					
Assemble	1	.10	.18	.07	.25
Load truck	6	.06	.56	.03	.59
Total			.74	.10	.84
Dead skids, electric low-lift platform truck; 52-foot belt conveyor, recorder and transcriber—group recap offstacking by truck recap:					
Record invoices on belt	1	.03	.05	.01	.06
Assemble	2	.11	.33	.05	.38
Load truck	2	.12	.36	.04	.40
Total			.74	.10	.84

$1.41. When the cost of making up split packages using the most efficient method is included in this total, the cost is $1.52 per ton.[3]

The next combination utilized semilive skids and a group recap system for assembly. A belt conveyor, with a four-man crew, was used to load the trucks. This combination had a combined labor and equipment cost of $1.12 per ton. If the split package operation is included, this figure increases to $1.25 per ton.

Dead skids and electric low lift platform trucks were used in conjunction with a group recap to assemble the required commodities and offstack them in the order assembly area by truckload. A 3-man crew including a checker then uses a 2-wheel clamp truck to pick up the items called by the checker, transport them to, and stow them in the truck. The costs for labor and equipment when this combination is used is $0.96; when split packages are included, the cost becomes $1.09 per ton.

In another installation, the assembly work was performed without regard to a recap. Commodities stored on pallets were moved into the order assembly area without any rehandling of individual packages. The truckloading was accomplished by using pallets to build loads based on customer invoice requirements then transporting them into the truck and setting them there intact.

Costs in this case amounted to $0.90 per ton without making up split packages and $1.03 when that activity was included.

One service wholesaler was able to use pallets and a fork truck to assemble commodities in unit loads alongside a 96-foot belt conveyor. The truckloading crew consisted of a checker, 3 belt loaders, and 2 stowers. With this setup, an assembly-line system was possible. The costs without split package preparation amounted to $0.84 a ton; when split packages were included, the cost became $0.98 per ton.

Another low-cost truckloading system included the use of a group recap procedure, dead skids and an electric low-lift platform truck with the assembled commodities being segregated by

[3] This combined figure is based upon the summation of 4 percent of the cost of making up split packages ($4.38 per ton of packages split) and 96 percent of the total cost of assembly and truckloading. The amount charged for the cost of making split packages is $0.17 per ton in each case.

truckload in the order assembly area. The job of loading the truck was accomplished by using a belt conveyor and a transcriber to announce the items required by each customer. One man of a two-man crew was assigned to loading the belt. The other man stowed packages in the truck. In this case, the cost was $0.84 per ton or $0.98 per ton when split-package preparation is included.

One of the two lowest cost systems does not require that commodities be segregated by truckload and the other does. Despite this fact, they are competitive systems.

Each of the systems listed in table 12 represents the most efficient use of manpower and equipment possible when the methods described earlier are used. The costs per ton do not reflect inefficient management or inefficient utilization of personnel. Warehouses in which these systems were used were selected because the management maintained a high level of productivity.

The differences in cost reflect two things: First, the cost of performing the assembly and truckloading operation is closely related to the method and equipment used, and second, the facility used can impose an added cost on the truckloading operations.

For example the wholesaler using two-wheel clamp trucks for both assembly and truckloading would be unable to use any other assembly or truckloading method or equipment type due to the restriction imposed by his warehouse. He could however, anticipate that his truckloading costs would be reduced as much as $0.57 per ton if he were to operate in a modern warehouse. If he shipped out an average of 100 tons a day for 250 days a year, he could anticipate an annual savings of $14,250 from the truckloading operation alone.

When a warehouse does restrict the selection of a method or equipment type, it behooves the service wholesaler to use his engenuity in adapting available equipment to that facility so that costs can be minimized.

The service wholesaler, operating in a modern single-story warehouse with the floor at truck-bed height, could easily use either of the two low cost methods. The assembly-line system for truckloading requires a large order assembly area and a long belt conveyor so that the chances for using it in an old facility would be remote. The system using a group recap, skids, and electric platform trucks in conjunction with a belt conveyor and transcriber has the advantage of being able to maintain the identity of commodities by truckload. It would also be possible to use this system in some older warehouses, although more than one truckloading station would be required, depending upon the volume of fresh fruits and vegetables to be loaded out in each 8-hour period.

How To Maintain a High Level of Productivity

There are many aspects to the job of keeping operating costs to a minimum, improving profits, and maintaining a strong competitive position in the industry. Most of these become the responsibility of the management in a business organization. Service wholesalers are usually both owners and managers; therefore, they should be concerned with the problems of operating cost control as well as with the problems of buying and selling. The earlier sections have indicated a number of low cost methods for assembling and loading fruits and vegetables on delivery trucks. Many additional steps can be taken to reduce costs or to maintain them at low levels.

Increase Labor Productivity

Modern materials handling equipment has a built-in capacity for a high level of productivity. Often that level is not achieved because labor assigned to use it is not efficiently utilized. In one service wholesale warehouse, Agricultural Marketing Service researchers were able to illustrate this in an effective manner.

One major objective in the truckloading operation is to completely load a truck in the shortest possible time. This demand is often exaggerated to such an extent that excessive amounts of money are spent to achieve it. In the warehouse operation studied, a nine-man crew was assigned to load a truck with the use of a belt conveyor. The conveyor was mounted on grooved steel wheels that rode on a floor installed steel track. During the process of truckloading, the conveyor could be moved into and out of the truck to facilitate the work. The 9 men in the crew were assigned as follows: 1 man was the checker, 1 man stowed packages in the truck, and 7 men were assigned to belt loading. The order assembly area that was used by this crew was completely stocked on the basis of a master recap before truckloading began. The results of a limited number of time studies indicated that each ton of produce loaded on a truck took 0.78 man-hour. Additional studies were unnecessary because even a casual observation indicated that the belt loaders were idle a high percentage of the time. The checker could only assign work to one man at a time. At best, two men might

BN 5663

Figure 32.—Belt loaders waiting for work.

work at the same time depending upon the number of items assigned to each one. The capacity of the belt was also limited. Very often when 2 men had work assignments at the same time, there would be packages on the belt, moving past the work station of 1 of the men, thus preventing him from doing his work. It is apparent that the five additional crew members had very little opportunity to engage in productive work.

In order to further test crew productivity, the number of belt loaders was reduced from 7 to 4. The checker and truckloader assignments remained the same. Idle time was reduced as a result, but it was still excessive (see fig. 32) in the opinion of the industrial engineers studying the work. Time studies of the 6-man crew indicated that it now took a total of 0.63 man-hour for each ton loaded on a truck. This was a reduction of 19 percent from the man-hour required when a 9-man crew was used.

In seeking further improvements the crew size was reduced to 4-men with the number of belt loaders now limited to 2 men. With this revised crew, studies indicated that the man-hour per ton was now reduced to 0.47. This was 25 percent less than the man-hour requirement for a 6-man crew and 40 percent less than that required for the 9-man crew.

It would appear then, that the most effective crew size was 4 men. At that crew level, however, other inadequacies in preparation and organization for truckloading became apparent. It was obvious that in order to sustain a crew that could load a truck at the least cost per ton, it would be necessary to revamp the layout of the order assembly area, the split-package operation, and the invoice system.

In the business studied, salesmen took customer orders on a printed checklist that indicated all the commodities handled by the wholesaler. The salesman wrote the customer's name and the quantities he ordered on this checklist. Clerks took the checklist and wrote up the individual orders on blank invoices and made the necessary price extensions. The quantities ordered by all the customers were summarized on a master recap. The master recap was divided up and assigned to several assemblers to accumulate and place the commodities in the order assembly area. During the assembly operation, an effort was made to make up some split packages in advance of the time truckloading began.

A major portion of the revision effort was directed toward improving the invoice and master recap procedures. Although the use of preprinted invoices would have reduced the clerical work involved, attention was given to the effect of the organization of the invoice itself on warehouse procedures. With this in mind, a detailed study was made of the volumes of each commodity shipped out during the year. As a result, it was determined that 10 commodities accounted for two-thirds of the total tonnage shipped. These commodities were apples, bananas, oranges, beans, cabbage, celery, lettuce, onions, potatoes, and tomatoes, which were listed in the upper left hand corner of a new mimeographed order checklist. The balance of the items

handled in the warehouse was listed below them as well as in adjacent column. These additional items were grouped alphabetically under the general heading of fruits and vegetables.

When the blank invoices were filled out, the items appeared on the invoices in the same order that they appeared on the checklist. The items listed on the invoice would be limited to those ordered by the customer. Nevertheless, the order in which they were listed was significant. This was true because the layout of commodities in the order assembly area (fig. 33) was revised to conform with the order in which they appeared on the checklist. (This checklist later became the basis for the design of a preprinted invoice.) The 10 high-volume commodities were divided into 2 groups of approximately equal tonnage. One group was placed on the left side of the belt conveyor and as close to the truck dock as possible. The second group was placed on the right side of the belt. The remaining commodities were also divided into two groups of equal tonnage.

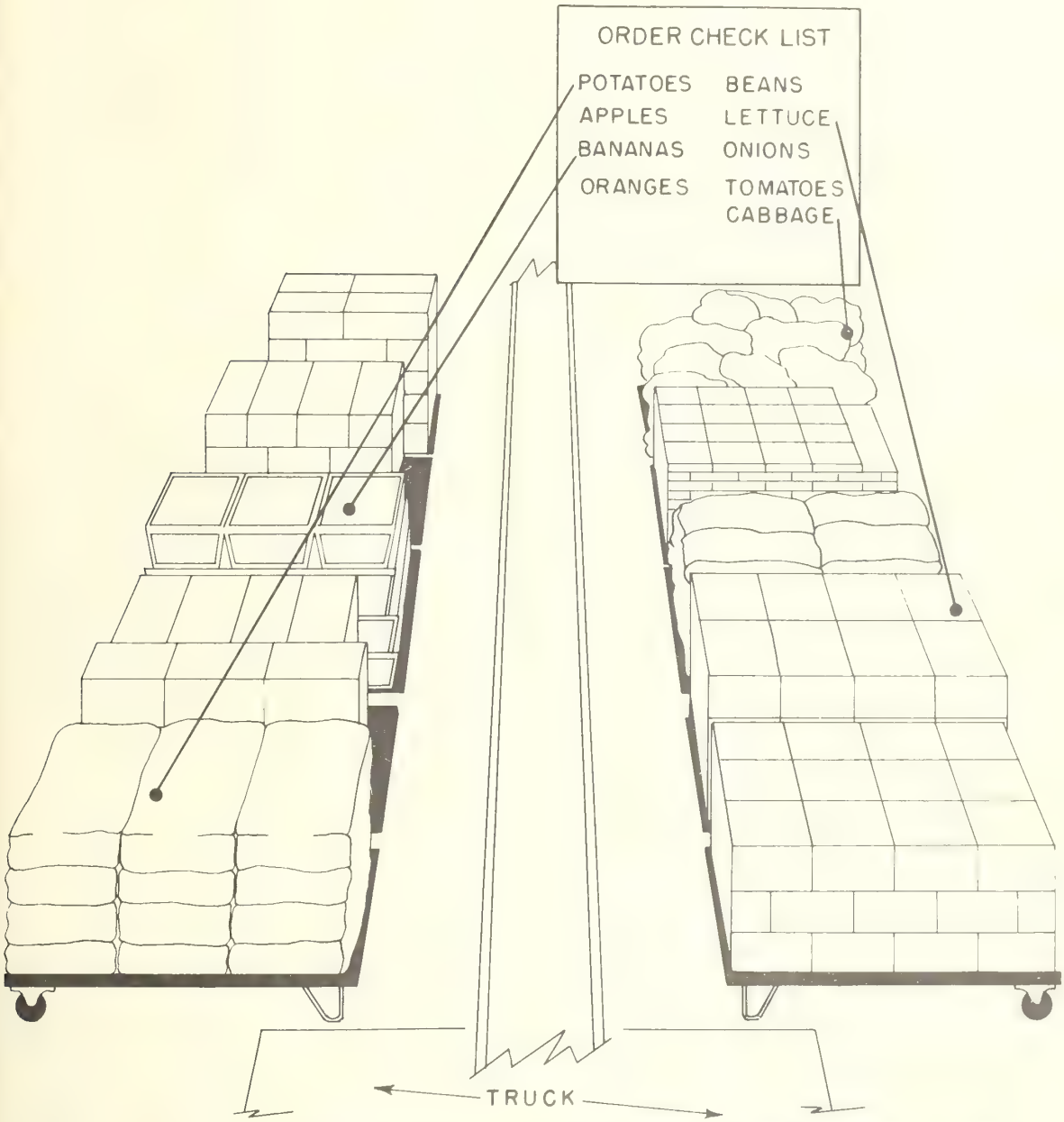

Figure 33.—Order-assembly area showing revised arrangement of commodities along belt conveyor.

Each group was placed on one side of the line. When all the commodities were placed in the order assembly area, their arrangement from the front of the conveyor line to the back was in the same order as that in which the items appeared on the order checklist.

When this plan was developed, a new master recap was devised to correspond with the order checklist. Commodities were regrouped in a few cases to simplify the assignment of work to the assemblers. That is, commodities stored in one part of the warehouse or in one cold-storage room were grouped for one man's assignment. The recap was constructed in such a way that it could be cut into parts. Each part was given to a particular assembler as his job assignment. The assemblers were instructed to place their commodities in the order assembly area as required by the prescribed arrangement described above.

Provision was made on this recap to summarize the number of split packages ordered. This portion of the recap was given to one assembler. It was his job to make up all the split packages required before the truckloading operation began. When this assignment was carefully completed, it eliminated one of the reasons the four-man crew could not operate effectively. In the old system, a belt loader had to leave the order assembly area to make up a split package called for on a customer invoice because it had not been prepared in advance of truckloading.

It should also be noted that an accurate recap is necessary for the smooth operation of a crew of this size. If a belt loader had to leave the area to get a full package that had been omitted from the recap, the operation was delayed needlessly. Since these delays cost money, it is highly desirable to minimize them if not eliminate them.

When the new arrangements and procedures had been tried and the "bugs" of inexperience worked out, time studies were made of the new operation. The crew assignments for the four men were the same as before. The major difference was in the organization of the work done prior to truckloading and in the position of the commodities in the order assembly. The results of the studies indicated that a 4-man crew could now load 1 ton of fresh fruits and vegetables in a delivery truck in 0.38 man-hour. This represented a reduction of 19 percent in the man-hour required by the same crew using the old system. It also represented a reduction of 51 percent in the man-hour required by the original 9-man crew.

In this case reduced cost of operation and increased worker productivity was accomplished without any capital expenditure for equipment. The available equipment had the capacity but it just was not being utilized. Further reductions in labor cost could have been achieved with the use of preprinted invoices. With all the items appearing in the same location on each invoice, the checker could quickly scan several invoices so that when he assigned work to a belt loader, he could make better use of his time. For example, the amount of walking back and forth through the order assembly area could be reduced if the checker added together all the potatoes ordered on 3 or 4 invoices. This would also ease the job of the stower in the truck because he would be fitting identical packages into the load. Needless to say the checker could read print much more readily than the cryptic longhand used to write up the invoices.

Some service wholesalers feel that larger crews are necessary in order to complete the truckloading operation in as short time as possible. This is usually necessary to meet the demands of customers and to maintain the quality of the commodities shipped out. Figure 34 indicates the total man-hours per ton required for each crew size as well as the elapsed time per ton. It is interesting to note that the 4-man crew using the revised assembly and invoice method took 0.095 hour of elapsed time, where the 9-man crew took 0.087 hour. This meant that a 4-man crew took one-half minute longer to load a ton of fruits and vegetables on a truck than the 9-man crew did, while the labor cost was 51 percent less. It is quite probable that if preprinted invoices had been used, the slight additional elapsed time required by a four-man crew would be eliminated.

Planning Work To Be Done

Many cost-saving possibilities exist through the exercise of sound management judgment in that phase of any service wholesale business that deals with the required handling operations. Efficient use of labor should be of greatest concern to management. The use of labor results in a variable cost for doing business that requires careful control to provide a profitable and a competitive basis for doing business.

Getting the greatest productivity out of the materials-handling equipment is one way in which cost can be reduced. This was pointed out in the earlier discussion that illustrated the introduction of an improved system for loading delivery trucks. In the same system, crew balance was implied. That is, the crew was adjusted to the point where delays due to crew interference were minimized. Another example of crew balance is illustrated in connection with the 96-foot belt conveyor and 6-man crew described earlier. In that case, the extra belt length made it advisable to have 3 belt loaders, but the productivity

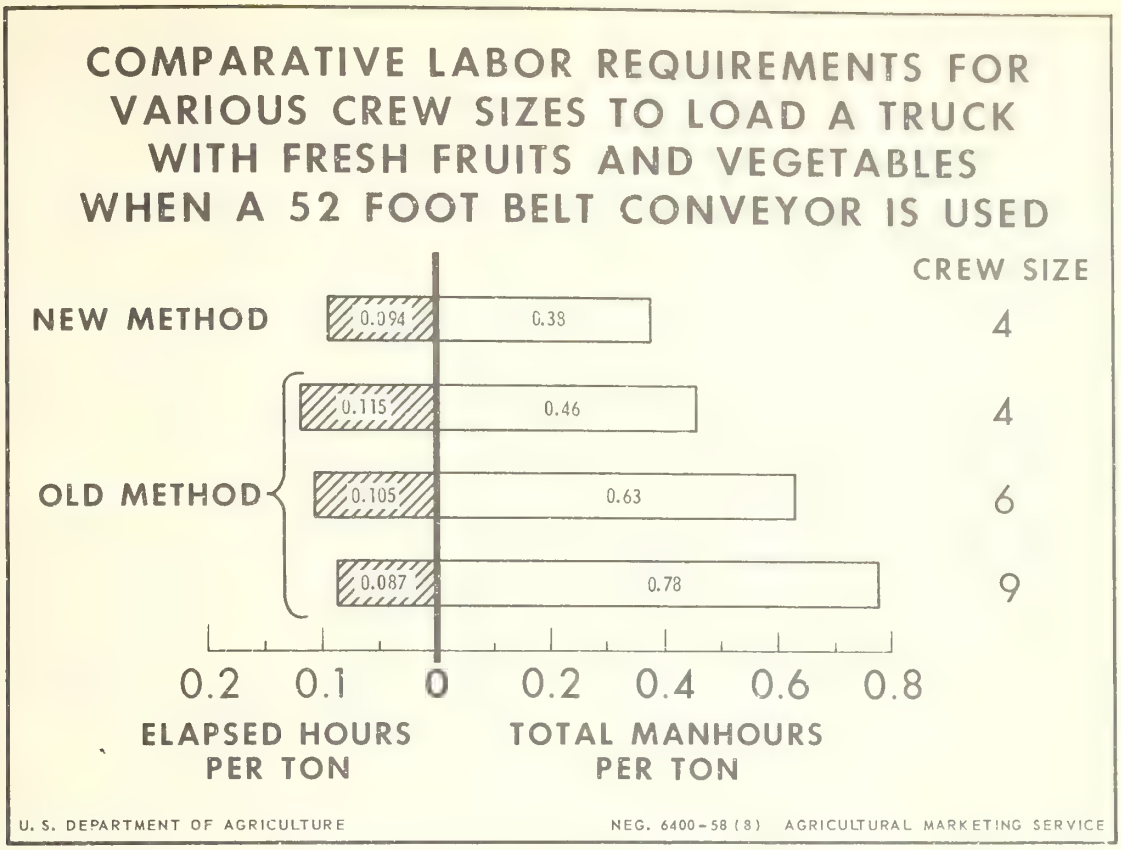

Figure 34.—Total man-hours and elapsed hours per ton required for various crew sizes.

of 3 belt loaders exceeded that of 1 man stowing commodities in the truck so 2 men were assigned to that job. This resulted in a better balanced crew. If it were possible to increase the speed of the belt, the productivity of the 3 belt loaders could be brought into even better balance with that of the 2 truck stowers.

When a single belt conveyor is used to load trucks, then the time it takes to move a full truck out and back an empty truck into position for loading becomes important. This is particularly true if job assignments are set up in such a way that the checker and belt loaders are idle during the truck-changing period. Another factor is the effect extended truck-change time has on the overall elapsed time for loading trucks.

Truck-change time can be minimized by having a parking area close to the warehouse. The man assigned to move the trucks should be ready to start his job as soon as the truck is loaded. If these conditions are met, then trucks can be changed in 3 minutes or less. If enclosed truck docks are used, then additional time would have to be allowed for opening and closing overhead doors.

Careful scheduling of the hours of work can also provide a reduction in costs. For example, the assembly operation must be completed, or enough of it for at least one truckload, before the truckloading operation can begin. For that reason when a separate crew does the assembly work, that crew can be scheduled to arrive at the warehouse 1 or more hours before the truck-loading crew reports to work.

Balancing Work Throughout the Week

The amount of equipment needed and the crew size required has to be determined in relation to the volume of business handled. Setting the crew size is not always easy because of variations in volume that occur on each day of the week. Part of this variation in volume is caused by the buying habits of the general public and part by the retail store management. Consumers make their largest food purchases on Fridays and Saturdays in most parts of the country. Partly because of the perishability of the products handled and also because of this unbalanced volume of business in the retail stores, the service wholesaler finds that his peak volume activity

occurs on the nights preceeding the peak volume store sales of fruits and vegetables. In addition to this, the service wholesaler also has a high volume business on Sunday night to replenish depleted retail store stocks.

Although the volume loaded out on each night of the week would be about equal to that shipped on the same night in subsequent weeks, the day to day variation of volume during the week presents a problem in selecting an economical crew size. If a crew is selected to easily handle the peak volume of business, then idle time would be high on the low-volume nights. Idle time cannot be avoided, but it should be recognized and minimized. If each man is entitled to 1 night off a week, that night off should fall at a time when volume is low. If delivery schedules are not too rigid, peak volume nights can be handled by a smaller crew that works overtime. In that case, idle time on low volume nights would be reduced.

Some service wholesalers have tried to overcome this daily variation in volume by asking the retail stores to accept their less perishable fruits and vegetables on those days when the wholesaler's volume usually runs low. If the retailers adopted this sort of a buying program, the exaggerated workloads would be minimized at the wholesale level. However, limited storage space in some retail stores limits their ability to receive more than 1 day's supplies at a time.

Care in Handling Fresh Fruits and Vegetables

An important feature of the handling operations in connection with moving fresh fruits and vegetables into consumer channels is the care with which each package must be handled. Damage to commodities can occur as a result of rough or careless handling. It might be thought that any effort to increase productivity would result in rougher handling, but, that is not the case. The man with good work habits can handle as many packages with care as a poor worker can who gives them rough and careless handling.

Most service wholesalers are quality conscious. They realize that by insisting on careful handling in their warehouse, the consumer will get top quality merchandise in the best possible condition. When this occurs, repeat and increased sales are possible. In some cases, wholesalers will assign a man to carefully check the condition of the produce before it is shipped out. This quality check usually occurs at the same time that a doublecheck is made of commodities placed in the order assembly area. Although this quality inspection may introduce some added cost, increased consumer goodwill is considered to be great enough to offset the expense.

Care in handling has to be considered throughout the entire assembly and truckloading operations. Commodities must be placed with care on the equipment used for assembly and for truckloading. The man who stows packages in the truck must organize the commodities in the stacks that he builds so that they are fully protected. Potatoes, onions, cabbage, and all commodities in solid wooden crates can usually be placed at or near the bottom of the stack. Commodities in fiberboard containers, bulge packs in wooden crates and packages with commodities sensitive to pressure can be placed in the middle of the load. Soft fruits, tomatoes, and other easily damaged items have to be placed on or near the top of the load to insure that they arrive at the retail store in sound condition. Bananas are usually well protected in the boxes in which they are packed. Precaution must be observed in stowing them in the truck to prevent other packages from slipping into or dropping on the top of the boxes, which in most cases are open.

Personnel Consideration

The proper selection and training of personnel is fundamental to the establishment of high levels of productivity. Since most of the handling work associated with the movement of fruits and vegetables through a warehouse is heavy, the physical condition of the men employed is an important factor. Package weights handled range from about 10 pounds up to 100 pounds. Most employees must handle at least some of the packages of each weight. When large numbers of the heaviest packages must be handled at one time, it may be necessary to assign two men to do the work. However, if 1 man is physically equipped to do the job by himself, he can do it more efficiently than 2 men.

A new employee not acquainted with the physical handling involved in the warehouse, should be shown how to lift packages with maximum safety for himself and with adequate care for the commodities. It is the responsibility of the foreman and the checker to see to it that a man is properly trained and continues to use good work habits.

Training also includes familiarizing each man with the varieties of each commodity handled by the wholesaler. This is necessary if the customer is to be assured of receiving exactly what he ordered. The checker should examine the commodities carefully as they pass the checking point or look over the packages in the order assembly

area to assure himself that the assembled items agree with the recap.

In the systems where a checker is used, careful recognition should be given to the fact that he is the key to the productivity of the truckloading operation. Actually, in most cases he has more responsibility than he can readily handle. For example, when belt conveyors are used to load a truck, the checker is expected to assign work to the belt loaders, carefully examine the packages as they come by his location, check the progress of the load in the truck, scan the routed invoices for work assignments and correct any invoice errors he may detect.

Of these activities, those that have the greatest effect on productivity are the assignment of work to the belt loaders and scanning the invoices to determine what items and how many are to be assigned to each belt loader. A well trained checker will have a clear picture of where each commodity is placed along the belt. He will know what commodities each man is assigned to place on the belt when they are called for. In scanning the invoices, he will add up quantities of identical items so that each conveyor loader will make fewer trips up and down the conveyor. While a loader is working at one particular location, the checker scans the invoices to find items close to that point. All this activity contributes to an efficient, productive truckloading operation. If the checker is slow in making his work assignments, idle time and crew interference are immediately increased and the cost of the operation goes up accordingly.

The checker's importance in connection with productivity is not often recognized, but there is a noticeable difference in the performance of a crew when a well trained checker makes quick, accurate, and clear job assignments compared with a poorly trained or disinterested checker.

The question might well be asked as to whether or not a checker has more work to do than he should have. The answer is yes. The effect on the work of a good checker interested in a high level of productivity is to gloss over the function of checking the packages as they come by his position and proceed into the truck. This check is usually for accuracy of the belt loader in completing the assignment given to him. Part of this "checking" function could well be done prior to the start of the truckloading operation by the checker or by the foreman, thus reducing the pressure of an item by item check as the truck is loaded.

Inventory Control

Due to the rapid turnover of perishable commodities in the fruit and vegetable industry, it is rather difficult to maintain accurate inventory records; but a wholesaler takes inventory directly or indirectly whether he calls it that or not. For example, an inventory shortage becomes known when an assembler finds that the warehouse stock is less than the amount indicated on his recap for assembly. Perhaps the most important consideration here is that the foreman be notified of the shortage at once. If it is possible to buy the missing quantity locally, then the problem can be solved at some expense and inconvenience. If the supply cannot be purchased locally, then each customer's order may have to be adjusted so that each receives at least a portion of the amount ordered.

Needless to say these adjustments cost money because of the time required to correct invoices and recaps. If a simple running inventory system were kept, the buyer could anticipate his needs more accurately and minimize shortages that occur.[4]

Regular and Preventive Maintenance[5]

Materials-handling equipment requires carefully scheduled maintenance and lubrication. Even a two-wheel handtruck will operate with less effort if its bearings are greased regularly and if any accumulated dirt is cleared away from its moving parts. Although it is difficult to place a dollar value on the savings associated with proper maintenance of manually powered handling equipment, such savings do exist. Lubrication can make the job less fatiguing and the worker using the equipment more productive.

Equipment that is power driven represents a much larger investment. Failure to maintain it properly will shorten its life and increase the cost of doing business as a result. If a belt conveyor should break down during the time that trucks are being loaded, a high labor cost would be incurred because of resulting delays or because alternative truckloading methods would have to be used. Lubricating, periodic adjustment and replacement of worn parts in advance of their total failure will all contribute to minimum cost of owning, operating, and using the power-driven units.

[4] The United Fresh Fruit and Vegetable Association has published data on simple inventory control systems that have been developed by members of the industry.

[5] For a more complete discussion of this subject see "Housekeeping and Preventive Maintenance" TargeTopic No. 7; December 1955; United Fresh Fruit and Vegetable Association.

Assembly and Truckloading When Four-Wheel Handtrucks Are Used

Four-wheel handtrucks can be used to assemble merchandise. This item of handling equipment has a flat bed of approximately the same capacity as a skid or pallet. The principal difference is that items are not usually stored on four-wheel handtrucks, so that during assembly each package must be loaded on the equipment manually.

This equipment is used to greatest advantage when assembly and truckloading are performed on a continuous basis using individual invoices, rather than a recap. This adds to the labor required to assemble, but decreases the labor required to load the trucks.

The four-wheel handtruck method of assembly begins with the invoices for a route arranged in the order in which they are to be loaded into the delivery truck. A number of empty handtrucks must be available—no less than three for each assembler. The first assembler takes as many invoices from the set as he thinks will constitute a handtruck load. He then locates an empty handtruck and proceeds to the first storage point as indicated by the items on the invoices he has taken. At this storage point, he loads those items on the hand truck that are stored there and are called for on his invoices. The assembler then proceeds to other storage areas and continues loading his handtruck until either the handtruck is full or there are no more items listed on the invoices. When he reaches this stage, the assembler pushes the loaded handtruck to the order-assembly area and deposits it on the platform at the tailgate. He then goes to the checking stand and deposits the invoices he has just assembled. From the top of the stack of invoices still to be assembled, he removes enough invoices to make up another handtruck load. With these invoices, he takes up an empty handtruck and repeats the assembly process.

With a number of workers using this same method and assembling the same truckload, it becomes essential that the invoices be arranged in proper sequence, and that the handtrucks be presented to the truckloader in correct order.

Before loading begins, the correctness of the assembled loads is verified by a checker. While checking the loads, he sees that they are lined up in proper sequence for off-loading in the delivery truck. It is not necessary to wait until the entire truckload is assembled before loading can begin. After 4 or 5 hand-truck loads have been assembled, and checked and alined by the checker—the loader can start stowing packages in the truck. To load the delivery truck, the loader pushes the first four-wheel handtruck in the line into the truck and positions it near the front. He then removes packages from the handtruck and stows them in the delivery truck. The loading pattern is the same regardless of the method of delivering the items into the delivery truck. Heavier, bulky items go on the bottom and light, perishable items go on the top of the load, with the whole load "tied together" so it won't break down during transit. When all the packages have been removed from a handtruck, the empty truck is removed to the platform where it becomes available to the assemblers. The truckloader pushes the next full handtruck into the delivery truck and continues with the loading operation.

With this method assembly and loading occur together. Arranging packages in proper order for loading takes place as part of the assembly operation. Therefore, it is not necessary for a checker to call out items for delivery to the truckloader. The checker's role, instead, is to make certain that the hand-truck loads are correct, and that the handtrucks are lined up so that they are loaded in the delivery truck in proper sequence. There are places where this method could be used effectively.

Although this system is not known to be in current use, studies made several years ago indicated that it was a flexible and efficient handling system.

Additional Time Requirements for Multistory and for Curb-Level Warehouse Buildings

Many wholesale dealers selling fresh fruits and vegetables operate in multistory buildings or in buildings with floors built at curb or street levels. In either case, the truckloading operation will require the expenditure of more man-hours for each ton of produce shipped out.

In the multistory building whose main floor may be truck-bed height, several problems arise. First, elevators must be used to get to the upper floors and back down again. It takes time to get the elevator to the floor where an assembler is waiting with his equipment. He has to open the door, move his equipment on, close the door and start the elevator. At his destination, he opens then closes the doors again. If the elevator is in use by another worker, the delays associated with elevator use can be increased substantially. The time involved in waiting for, and using the elevator, would increase the man-hour requirements for assembly. The magnitude of the man-hour increase would be related to the condition of the elevator, its load-carrying capacity, its speed and the square feet of floorspace available.

A second feature of multistory plant operation is the added difficulty in supervising the labor force. An entire labor crew can virtually disappear from sight during the assembly operation. Lost time often occurs because of relaxed working habits that occur as a result of the enforced indirect supervision.

When a warehouse floor is at curb or street level, additional work must be done in order to load the delivery trucks. Some service wholesalers use an entirely manual operation for loading their trucks. An order assembly area is set up but the truckloading crew has to walk to items called for, pick them up one at a time, transport them to, and place them on, the tailgate of the truck. The truck stower picks up the package at the tailgate, walks to the workface and stows the package. All of this manual handling and walking adds heavily to the cost of the truckloading operation.

In a very few cases, service wholesalers have overcome some of the disadvantages of this floor-level problem by using a "camel back" conveyor (fig. 35). This conveyor can be connected up with enough horizontal lengths of conveyor for efficient use of an order assembly area. The limitation on this equipment is the fact that the conveyor cannot extend very far into the truck. This necessitates the use of two stowers in the truck in order to handle the walking required from the end of the conveyor to the workface. However, even though this system would take more man-hours to use than those described in the body of this report, it is much more efficient than the manual system described above.

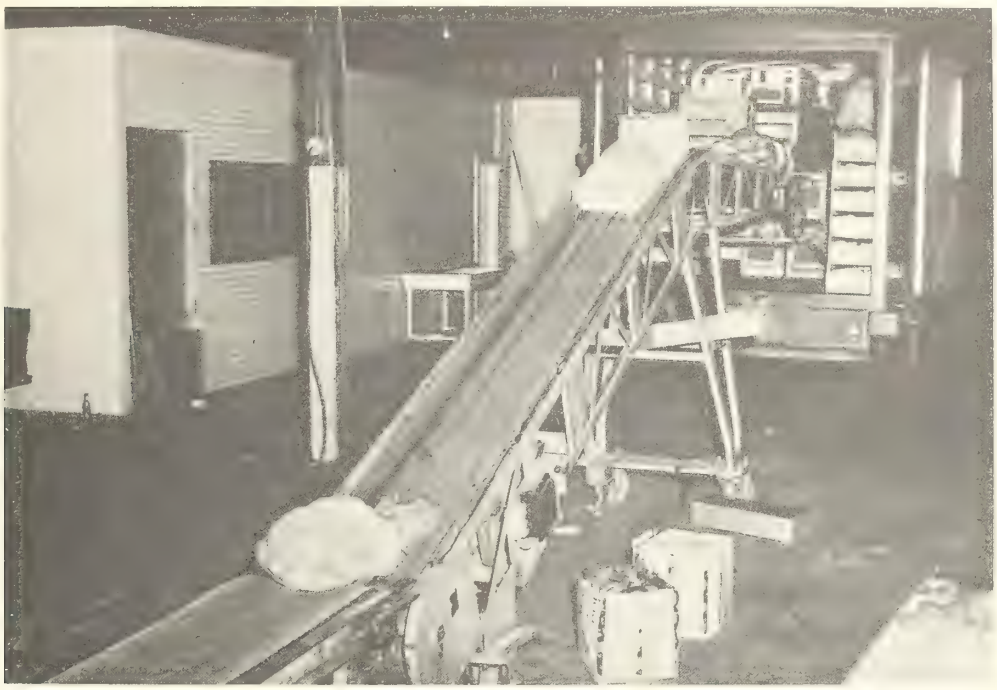

BN 5679

Figure 35.—A camel-back conveyor being used to overcome the problem of truckloading when the warehouse floor is at curb level.

Appendix

Research Methods and Techniques

The preparatory, assembly, and truckloading operations were observed in the warehouse of service wholesalers of fresh fruits and vegetables. Time studies were made of these operations during the working hours and under the conditions that are commonly found to exist in the industry. The equipment types reported on were representative of those most often used by service wholesalers to assemble commodities and to load them on trucks.

Time-study techniques were used to carefully record the major elements of work that were performed. Each member of the crew assigned to work on assembly or truckloading was studied. A decimal-minute stopwatch was used to record the time. As a worker was studied, the time-study man recorded the time required for each element of work. Delays were recorded and identified to determine their cause. All delays classed as avoidable have been removed from the time requirements established for the work. Unavoidable delays such as crew interference are included in the total labor requirements for each operation. These latter delays are incurred as a result of the method used or the number of men assigned to do a particular job.

During the course of recording data for a time study, the trained observer made an estimate of the effort level of the man being studied. The effort level was expressed as a percentage. The basis for comparison was a normal performance level of 100 percent. It is a measure of the effort that a representative worker is expected to put forth in the normal execution of his assigned duties. In observing a given worker, the time-study man compared the worker's effort with a normal performance. He then recorded a percent which was higher, lower, or equal to the normal rate. A higher rate would mean that a man was more productive than normal. A lower rate would indicate a lower level of productivity than normal. The observed time was multiplied by the assigned percent effort level to convert it to the time that would be required if the worker studied had performed at a normal pace. The resulting time value is known as the base time.

The time values used in this report are productive times. The productive time is equal to the base time, plus allowances for fatigue and personal needs. The fatigue allowance is included to provide time for the assigned worker to rest to overcome the fatigue resulting from sustained physical effort. The percent value used for the fatigue allowance is directly related to physical difficulty and the working conditions associated with an assigned job. Five percent is the value assigned for personal needs. This percent is generally accepted as being adequate for worker comfort. In an 8-hour workday it would provide a total of 24 minutes for that purpose.

The productive times developed in this manner provide a sound basis for comparison of crew sizes, methods, and equipment types. Studies in different parts of the United States indicate that labor productivity varies from one locality to another. This variation has been observed from one city to another within the same State. Therefore, the observed time is corrected to base time so that the data obtained in one community are comparable with those obtained in another. The addition of fatigue and personal allowances to the base time results in the productive time. This final value can be used as a guide to the minimum labor force necessary for a given business volume, method of operation and equipment type.

Equipment Costs

In a number of cases materials-handling equipment is used in connection with both receiving and loading-out operations. In those cases where this is true one-half of the initial cost of the equipment is assigned to the receiving operation and one-half to the loading-out operation. In this way the loading-out operation is only charged to the extent to which the equipment is used in that activity. It is estimated that the handling units involved would be employed for 2,000 hours a year on receiving and 2,000 hours a year on loading out.

The initial cost of equipment indicated in table 13 is based on data supplied by manufacturers. It is f. o. b. at their plants. The figures were current for the year 1957.

The figure used for the expected number of years of life reflects the requirements of the tax

TABLE 13.—*Ownership and operation cost for 1 unit each of various types of materials-handling equipment. Cost per hour was based on 2,000 hours of use per year except as noted*

Equipment	Initial cost per unit	Expected life	Ownership cost: Depreciation	Ownership cost: Interest 5%	Ownership cost: Insurance and taxes 4%	Ownership cost: Total	Operating cost: Power	Operating cost: Maintenance	Operating cost: Total	Total annual cost	Cost per hour
	Dollars	*Years*	*Dollars*	*Dollars*	*Dollars*	*Dollars*	*Dollars*	*Dollars*	*Dollars*	*Dollars*	*Dollars*
-wheel handtruck (1,000-pound capacity rubber-tired wheels)	[1] 20.00	12	1.67	0.54	0.80	3.01	------	2.00	2.00	5.01	0.0025
-wheel clamp truck (1,000-pound capacity	[1] 45.00	12	3.75	1.22	1.80	6.77	------	6.00	6.00	12.77	.0064
-wheel handtruck (2,000-pound capacity, size 30- by 60-inch)	[1] 37.50	12	3.13	1.02	1.50	5.65	------	8.00	8.00	13.65	.0068
emilive skid (2,000-pound capacity 30- by 60-inch)	[1] 17.50	12	1.46	.47	.70	2.63	------	5.00	5.00	7.63	.0038
acklift for semilive skid (3,000-pound capacity)	[1] 35.00	12	2.92	.95	1.40	5.27	------	6.00	6.00	11.27	.0056
Belt conveyors (16-inch belt, frame mounted on steel casters):											
20-foot length	1,250.00	15	83.33	33.33	50.00	166.66	42.00	25.00	67.00	233.66	.1168
32-foot length	1,615.00	15	107.67	43.07	64.60	215.34	106.00	35.00	141.00	356.34	.1785
Bridge plates:											
Magnesium (30- by 72-inch)	300.00	15	20.00	8.00	12.00	40.00	------	5.00	5.00	45.00	.0225
Steel (48- by 58-inch)	106.00	10	10.60	2.92	4.24	17.76	------	5.00	5.00	22.76	.0114
Industrial low lift platform trucks:											
Manual (4,000-pound capacity, mechanical)	[1] 165.00	12	13.75	4.47	6.60	24.82	------	8.00	8.00	32.82	.0164
Electric (4,000-pound capacity):											
Machine	[1] 735.00	8	91.87	------	------	------	------	------	------	------	------
Battery 4.15-kw.-hr. capacity	[2] 405.00	5	81.00	------	------	------	------	------	------	------	------
Charger	[1] 225.00	8	28.12	------	------	------	------	------	------	------	------
Total	1,365.00	------	200.99	39.15	54.60	294.74	37.50	80.00	117.50	412.24	.2061
Dead skid (36- by 54-inch)	[1] 6.00	8	.75	.17	.24	1.16	------	.25	.25	1.41	.0007
Industrial pallet transporter (4,000-pound capacity, electric):											
Machine	825.00	8	103.12	------	------	------	------	------	------	------	------
Battery 4.15-kw.-hr. capacity	405.00	5	81.00	------	------	------	------	------	------	------	------
Charger	225.00	8	28.12	------	------	------	------	------	------	------	------
Total	1,455.00	------	212.24	41.68	58.20	312.12	37.50	80.00	117.50	429.62	.2148
Industrial fork truck (2,000-pound capacity, 106-inch lift):											
Machine	[1] 2,450.00	8	306.25	------	------	------	------	------	------	------	------
Battery 14.85-kw.-hr. capacity	[2] 1,250.00	5	250.00	------	------	------	------	------	------	------	------
Charger	[1] 575.00	8	71.88	------	------	------	------	------	------	------	------
Total	4,275.00	------	628.13	122.58	171.00	921.71	134.00	135.00	269.00	1,190.71	.5954
Pallets:											
40- by 48-inch	3.00	3	1.00	.10	.12	1.22	------	1.00	1.00	2.22	.0011
40- by 48-inch	[1] 1.50	3	.50	.05	.06	.61	------	1.00	1.00	1.61	[3] .0054
32- by 40-inch	[1] 1.00	3	.33	.03	.04	.40	------	.67	.67	1.07	[3] .0036
Dictaphone	360.00	8	45.00	10.13	14.40	69.53	3.00	25.00	28.00	97.53	[4] .1951
Transcriber, speakers and controls	480.00	8	60.00	13.50	19.20	92.70	3.00	25.00	28.00	120.70	.0604
Scale, table (40-pound capacity, fan type dial)	300.00	15	20.00	8.00	12.00	40.00	------	15.00	15.00	55.00	.0275

[1] This represents one-half of the total cost. It is estimated that the equipment will be used an additional 2,000 hours on other warehousing operations. The balance of the ownership costs will be assigned to those operations.

[2] Total cost is included since 1 battery is required for each 2,000 hours of operation.

[3] Based on 300 uses each year.

[4] Based on 500 hours of use each year.

policies of the Federal Government as well as depreciation periods recommended by the manufacturers. With the exception of the power equipment, the indicated lives are less than those that would be based upon actual physical deterioration of the equipment.

An interest rate of 5 percent was assumed to cover either the cost of borrowing money to purchase equipment or the income lost when company assets were invested in the equipment.

Insurance and local taxes on the equipment vary widely from one part of the country to another. Since recognition should be given to these items of ownership expense, 4 percent was assumed to be representative of nationwide requirements.

An average power rate of $0.027 per kilowatt hour was obtained from statistics published by the Federal Power Commission. It represents a national average based on the commercial power rate schedule.

In all but 3 cases, which are noted, it was assumed that each equipment type would be ut lized for 2,000 hours each year. Using th assumption permits a comparison of the equi ment types on an equitable basis. The equi ment is not penalized as a result of poor util zation.

TABLE 14.—*Equipment cost calculations for the assembly operation when more than one type of equipme is involved*

Equipment type	1 Number of units per ton	2 Machine hours per ton [1]	3 Utilization per ton	4 Total machine hours per ton, 1×2×3	5 Hourly equipment cost	6 Equipmen cost per to 4×5
		Hours	*Hours*	*Hours*	*Dollars*	*Dollars*
2-wheel handtruck	1	0. 58	0. 53	0. 31	0. 0025	0. 00
4-wheel handtruck	3	. 25	. 28	. 21	. 0068	. 00
Dead skid	3	. 25	. 19	. 14	. 0007	. 00
Low-lift platform truck	1	. 25	. 19	. 05	. 0164	. 00
Totals				. 71		. 00
Pallets (40- by 48-inch)	2. 5	. 26	. 85	. 55	. 0011	. 00
Industrial pallet transporter	1	. 26	. 85	. 22	. 2148	. 04
4-wheel handtruck	4	. 57	. 15	. 34	. 0068	. 00
Totals				1. 11		. 05
Pallets (32- by 40-inch)	2. 9		. 82	[2](2. 38)	[3]. 0036	[3]. 00
Industrial fork truck	1	. 15	. 82	. 12	. 5954	. 07
4-wheel handtruck	5	. 68	. 18	. 61	. 0068	. 00
Totals				. 73		. 07

[1] Includes 0.03 hour per ton for cleanup.
[2] Equivalent number of pallet uses per ton.
[3] Pallets used 300 times a year. Full cost is assigned because pallets a used once each night.

Labor Cost Data

In order to place cost comparisons on an equal basis, the same labor rates were used in each of the labor cost analyses associated with each equipment type used. The wage rate paid to assemblers, belt loaders, truck stowers, and truckloaders was assumed to be $1.50 per hour. This rate includes the basic wages paid plus fringe benefits for social security, workers compensation insurance, hospitalization and so on. The checker's and the forklift-truck operator's wage rate was assumed to be $1.75 per hour which also included base wages plus fring benefits.

Since the checker is at least a crew leader i not a supervisor, and since his work is the ke to the productivity of the truckloading crew, hi wage was set at a higher level. The forklift truck operator has the responsibility for runnin an extremely expensive piece of equipment an also requires more skill to use it than when othe equipment types are used.

Fatigue and Personal Allowances

The following allowances are applicable to the indicated handling operations performed in service wholesale warehouses. A personal allowance of 5 percent has been added to the fatigue allowance to provide the total allowance figure indicated.

Time item	*Total fatigue and personal allowances (percent)*
Assemble all fresh fruits and vegetables:	
All equipment types except forklift truck	20
Forklift truck	10
Preparation for split packages	20
Make up split packages	1
Place package on belt conveyor	2
Remove package from belt conveyor and stow in truck	2
Remove package from 2-wheel clamp-truck load and stow in truck	2
Pick up package manually from assembly area, transport manually and stow in truck	2
Build pallet load on pallet transporter, transport load and set in truck	2

Labor Requirements for Setup and Cleanup

The following are the average labor requirements per ton of fresh fruits and vegetables for setup and cleanup before and after the assembly and truckloading operation when various types of equipment are used:

Assembly Operation

Time item	Base time (man-hours)	Fatigue and personal allowances (man-hours)	Productive time (man-hours)
All types of equipment: Cleanup—Begins when truck loading operations ends. It includes transporting unused packages of produce to proper storage areas, placing materials-handling equipment used for assembly in a central location, sweeping order-assembly area and disposing of garbage and trash. Ends when order-assembly area is ready for subsequent assembly operations	0. 03	------	0. 03

Truckloading Operation [6]

1. Belt conveyor mounted on grooved casters that ride on a track fastened to the floor. Three-man crew.

Time item	Base time (man-hours)	Fatigue and personal allowances (man-hours)	Productive time (man-hours)
Setup and cleanup: Begins when truck has been backed into position. Includes moving conveyor into the truck; starting conveyor belt, moving conveyor out of truck; and stopping conveyor belt. Ends when conveyor belt stops	0. 01	------	0. 01

2. Belt conveyor mounted on grooved casters that ride on a track fastened to the floor. Conveyor difficult to move. Four-man crew.

Time item	Base time (man-hours)	Fatigue and personal allowances (man-hours)	Productive time (man-hours)
Setup and cleanup: Begins when truck has been backed into position. Includes moving conveyor into the truck; starting conveyor belt, moving conveyor out of truck; and stopping conveyor belt. Ends when conveyor belt stops	0. 03	------	0. 03

[6] An average truckload of 6 tons was assumed to convert time required per truck to a per ton basis.

3. Belt conveyor riding on track-mounted wheels. Power operated movement into and out of truck. One-man crew.

Time item	Base time (man-hours)	Fatigue and personal allowances (man-hours)	Productive time (man-hours)
Setup and cleanup: Begins when assembly operation ends. Includes moving conveyor into truck, starting conveyor belt, moving conveyor out of truck and stopping conveyor belt. Ends when conveyor belt is stopped	0. 01	------	0. 01

4. Pallets and electric pallet transporters. One-man crew.

Time item	Base time (man-hours)	Fatigue and personal allowances (man-hours)	Productive time (man-hours)
Setup and cleanup: Begins when man places first invoice on pegboard. Includes placing invoices on pegboard, get and place bridgeplate in truck, later remove bridgeplate and set aside and remove invoice from pegboard. Ends when last invoice is removed from pegboard	0. 04	0. 01	0. 05

5. Two-wheel clamp trucks.

Time item	Base time (man-hours)	Fatigue and personal allowances (man-hours)	Productive time (man-hours)
Setup and cleanup: Begins when truck has been backed into position. Includes walking to bridgeplate, grasping and transporting bridgeplate to truck, place in position, later remove and place bridgeplate aside. Ends when bridgeplate is released in temporary storage	0. 01	------	0. 01

Assembly Operations

The assembly operation begins when a worker receives instructions or a portion of a recap indicating the commodities and the number of packages of each to be placed in the order-assembly area. It includes locating the necessary materials-handling equipment, transporting it to a cooler or general storage area, checking the recap, selecting the indicated number of pac ages of each commodity and placing them on t handling equipment, transporting the load t and releasing it in, the order-assembly area. T operation ends when equipment load has be released in the order assembly area. The lab requirements are shown in table 15.

TABLE 15.—*Comparative labor requirements to assemble 1 ton of fresh fruits and vegetables for shipme when the average transportation distance is 100 feet for various methods and combinations of mater als-handling equipment*

Equipment type	Recap type	Base time	Fatigue and personal allowances	Producti time
		Man-hours	*Man-hours*	*Man-hou*
2-wheel clamp trucks and 2-wheel handtrucks	None	0. 44	0. 09	[1] 0.
2-wheel handtruck; 4-wheel handtruck; dead skids and manual low-lift platform trucks.	Truck recap	. 33	. 06	[2].
Semilive skids and jacks	Group	. 22	. 05	.
Pallets and electric pallet transporters; 4-wheel handtrucks.	Truck recap	. 23	. 05	[3].
Pallets and fork trucks; 4-wheel handtrucks	82% no recap; 18% truck recap	. 19	. 02	[4].
Dead skids and electric low-lift platform trucks	Group recap offstacked by truck recap.	. 16	. 03	.

[1] Clamp-type and stevedore-type 2-wheel handtrucks were used to assemble and load trucks in 1 continuous cycle. The time shown here represents that phase of the cycle spent on assembly.

[2] 2-wheel handtrucks were used to move 53 percent of the tonnage. Productive time was 0.55 man-hour per ton. 4-wheel handtrucks were used to move 28 percent of the tonnage. Productive time was 0.22 man-hour per ton. Dead skids were used to move 19 percent of the tonnage. Productive time was 0.22 man-hour per ton.

[3] Pallets and pallet transporters were used to move 85 percent of the tonna Productive time was 0.23 man-hour per ton. 4-wheel handtrucks were us to move 15 percent of the tonnage. Productive time was 0.54 man-hour p ton. 10 percent of total tonnage moved was in institutional-type groce items.

[4] Pallets and fork trucks were used to move 82 percent of the tonna Productive time was 0.12 man-hour per ton. 4-wheel handtrucks were us for 18 percent of the tonnage. Productive time was 0.65 man-hour per to

Preparation of Split Packages

Some of the full packages of fruits and vegetables that are received by service wholesalers are opened and the contents divided up into smaller package units. The work associated with this job can be divided into two elements. The first element is called preparation for split packages. The element begins when the warehouseman receives a portion of a recap that has the summary of split packages required for a particular route or truckload. It includes locating a four-wheel handtruck, transporting it to the storage area, loading it with a variety of full packages, transporting the load to the package-splitting station. It also includes obtainin paper bags, crates and other supplies that a needed for making the smaller packages. Th element ends when all the full packages and su plies have been arranged at the package-splittin station.

The second element is to make up the spli packages. This element begins when all th packages and supplies have been arranged at th package-splitting station. It includes checkin the recap, opening the full packages of commodi ties, lifting out a number of pieces of each com modity to provide the required weight or coun

TABLE 16.—*Comparative labor requirements per ton of fresh fruits and vegetables used for split package for the element preparation for split packages when 4-wheel handtrucks are used and the transportatio distance from the split package station area is 100 feet*

Time item	Base time	Fatigue and personal allowances	Productive time
	Man-hours	*Man-hours*	*Man-hours*
When full packages are brought up 1 or 2 at a time as needed	1. 12	0. 22	1. 3
When all the full packages required for the night's operation are brought up before the next element begins	. 41	. 08	. 4

TABLE 17.—*Comparative labor requirements per ton of fresh fruits and vegetables used for split packages for the element make up split packages*

Time item	Base time	Fatigue and personal allowances	Productive time
	Man-hours	*Man-hours*	*Man-hours*
When work is assigned to 1 or more men in addition to their other duties	3. 09	0. 31	3. 40
When work is assigned full time to 1 man	1. 88	. 19	2. 07

for a given package, placing the item in an open crate or a paper bag, sealing the bag and setting the crate or bag on a four-wheel handtruck. The element ends when the last split package called for on the recap has been prepared and placed on the handtruck.

Truckloading Operations

When the assembly operation has been completed, the truckloading operation can begin. In most systems a checker works directly from a group of invoices that have been arranged in such a way that the last store order to be delivered is loaded first. The checker calls out the items indicated on each invoice. As they are called out, one or more warehousemen locates the items in the assembly area and places them on some other type of handling equipment. The produce items are then transported into the truck where they are removed from the equipment and built into stacks on the floor of the truck. The procedure is repeated as many times as may be necessary to complete the loading of the truck.

TABLE 18.—*Labor requirements per ton of fresh fruits and vegetables for the truckloading operation when motorized belt conveyors are used*

Time item	Crew size	Base time	Fatigue and personal allowances	Job-regulated wait time [1]	Productive time
	Number	*Man-hours*	*Man-hours*	*Man-hours*	*Man-hours*
Place package on belt	1	0. 09	0. 02	0	0. 11
	2	. 11	. 02	[2] . 06	. 19
	3	. 09	. 02	[3] . 05	. 16
Stow package in truck	1	. 07	. 01	0	. 08
	2	. 07	. 01	0	. 08

[1] Indicated values determined through time study.
[2] 0.08 total less 0.02 for fatigue equals 0.06.
[3] 0.07 total less 0.02 for fatigue equals 0.05.

TABLE 19.—*Labor requirements per ton of fresh fruits and vegetables for the truckloading operation when a 1-man crew and pallets and an electric pallet transporter are used*

Time item	Base time	Fatigue and personal allowances	Productive time
	Man-hours	*Man-hours*	*Man-hours*
Load pallet, transport to and set in truck	0. 26	0. 05	0. 31
Load pallet, transport to and offstack in truck	. 01	0	[1] . 01

[1] An average of 100 pounds of each ton was offstacked in the truck.

TABLE 20.—*Labor requirements per ton of fresh fruits and vegetables when 2-wheel clamp trucks are used for the truckloading operation*

Time item	Crew	Base time	Personal and fatigue allowances	Productive time
	Number	*Man-hours*	*Man-hours*	*Man-hours*
Truckloading as a separate operation: Pick up packages, transport to, release, and stow in truck	2	0. 19	0. 04	0. 23
Truckloading as a part of a continuous assembly and truck loading operation:				
Transport to and release in truck	1	. 11	. 02	. 13
Stow in truck	1	. 13	. 03	. 16

Miscellaneous Operations

Time item	Base time (man-hours)	Fatigue and personal allowances (man-hours)	Productive time (man-hours)
Dictaphone recorder and transcriber—1-man crew.—Record invoices on belt: Begins when recorder is turned on. Includes placing recording belt in recorder, recording items from invoices, turning recorder off and removing belt. It also includes placing belt in transcriber, turning transcriber on; later, turning transcriber off and removing belt. Ends when belt is removed from transcriber	0. 03	------	0. 03
Truck change for all equipment types.—1-man crew: Begins when last package has been stowed in truck. Includes closing truck doors, walking to truck cab, opening door, getting in cab, starting engine, driving truck away and parking. It also includes walking to and getting in another truck, starting engine, drive truck to and back into dock, stop engine, walk to and climb on platform, open truck doors. Ends when truck doors are open	0. 01	------	0. [illegible]

Glossary

1. Assembler. A member of the loading-out crew whose function is to bring assigned items in their proper quantities to the order-assembly area.
2. Assembly-line system. A method of assembling produce in which the order-assembly area is kept stocked with unit loads of each commodity without regard to a recap of the amount of each item to be loaded out. This method is used in conjunction with belt conveyors for loading delivery trucks.
3. Base time. The time recorded during a time study converted to the time that would be required if the worker observed had performed at a normal pace. It is obtained by multiplying the observed time by the worker's effort level expressed as a decimal.
4. Belt loader. A member of the truckloading crew whose function is to locate items in the order assembly area as they are called for by the checker, and to place the items on a belt conveyor which transports them into the delivery truck.
5. Blank-type invoice. An order form on which all the items ordered must be written by hand.
6. Bridgeplate. A portable metal ramp which serves as a bridge between the loading platform and a delivery truck.
7. Checker. A member of the loading-out crew who calls out from invoices items that are to be loaded into the delivery truck. He must call items in proper sequence, check them as they enter the truck and coordinate the work of the belt loaders and truck stowers.
8. Crew balance. Occurs when the number of crew members has been selected and assigned work in such a way that idle time and crew interference are minimized.
9. Crew interference. Occurs when one or more members of a crew are unable to work until another crew member completes his job.
10. Cycle of work. An operation which consists of a number of elements which must be performed in a specified sequence in order to complete the operation.
11. Doublecheck. An inventory of the items placed in the order-assembly area by the assemblers to check the quantities assembled against those specified on the recap. Usually performed immediately prior to the loading of the merchandise on a truck.
12. Effort level. An estimate in percent of the physical effort expended and the skill of a worker observed during the course of a time study. For the purpos of this study normal effort was assumed to be 10 percent.
13. Elapsed time. The length of time, measured in hour required to perform an operation.
14. Element. A component of an operation. The smal est unit of work which was subject to measuremen through time study techniques used in this stud
15. Fatigue allowance. A time value added to the bas time to provide a rest period for the worker t overcome fatigue that results from physical effor
16. Job-regulated wait time. Consists of idle time re sulting from an irregular flow of work betwee workers in a crew.
17. Order-assembly area. That section of the warehous where produce is gathered prior to being loaded int delivery trucks. Usually located adjacent to th truckloading station, and in a central section of th warehouse.
18. Personal allowance. An amount of time added t the base time to provide for the personal needs o each worker.
19. Preprinted invoice. An order form on which th names of the major items handled are printed s that instead of writing out the name of the iten ordered, it is only necessary to note the quantit ordered alongside the item on the invoice.
20. Productive time. The time value for performing a element, which consists of the base time plus allow ances for fatigue and personal needs.
21. Recap. A summary of invoices showing the tota number of each item ordered. This summary ma be for all the orders on a truckload, a group o truckloads, or a complete summary of all the orders
22. Routing. The assignment of orders to delivery trucks, and the arrangement of those orders in thei sequence of delivery.
23. Service wholesaler. A dealer who obtains orders through field salesmen or over the telephone and makes deliveries to his customers.
24. Shrinkage. Loss in salable product that occurs during the split-package operation because of quality deterioration, physical damage, and waste.
25. Split package. A prepared package which contains a smaller amount of a certain commodity than the container in which the commodity was received.

. STOWER. A member of the loading-out crew stationed in the delivery truck whose function is to place packages delivered to him in their proper positions in the truckload.

. TRUCKLOADER. A warehouseman who selects items from the order-assembly area in accordance with the requirements of customer invoices and who transports the items to, and stows them in, the delivery truck.

. UNIT LOAD. A number of packages grouped together so that they can be handled as a unit.

29. WAREHOUSEMAN. A member of the loading-out crew who may, at different times, be assigned as an assembler, a stower, or a belt loader.

30. WORKFACE. The vertical surface of a load being built in a delivery truck that is closest to the stower.

31. WORK-STATION—CONVEYOR. An aisle, 2 or 3 feet wide, that runs alongside one or both sides of a belt conveyor. It is used by the belt loader to gain access to the commodities stored in the order assembly area.

☆ U. S. GOVERNMENT PRINTING OFFICE: 1959 O—485669