Millwrighting

By

James F. Hobart

h

1909
HILL PUBLISHING COMPANY
505 Pearl Street, New York
6 Bouverie Street, London, E. C.

AMERICAN MACHINIST—POWER—THE ENGINEERING AND MINING JOURNAL

Hill Publishing Company, New York, U. S. A.

INTRODUCTION.

The purpose of this book is to enable you as a millwright to begin your work where others left off. It is my desire to save you the necessity of going over the ground traveled by others in your chosen field. The results of my experience, observation and study are set forth in this book together with the best practice of other millwrights in the hope that you may be able to avail yourself of my efforts and increase your value to your employer and your ability to command a higher salary.

James F. Hobart.

Detroit, Mich., Nov. 18, 1908.

CONTENTS

CHAPTER I.

The Millwright and What He is — Qualifications of a Millwright — Study Methods — Steel and Timber Framing.

CHAPTER II.

Factory Location — Movement of Material During Manufacture — Sawmill Arrangement — Lack of Working Space Around Machines.

CHAPTER III.

Laying out The Buildings — Methods of Laying Out Foundations — The Builder's Level — Center or Base Lines — Laying out Foundations with the Transit — Secondary Lines — Permanent Stations or Targets — Station Points and Stones — Arrangement of Stations and Sub-Stations — A Station-Rod — Using the Station-Rod — Long and Short Station-Rods — Laying Down Cross-Lines — Advantages of The Station-Rod Method.

CHAPTER IV.

The Builder's Level and Foundations — Cost of Stone Stations — Concrete Station Stones — The Determination of Foundation Levels — Home-Made Leveling-Rod or Staff — Vernier Scale-Making and Reading — Use of the Leveling-Rod — Leveling Foundations with a Cross-Hair Instrument — Plumbing the Leveling-Rod — Batter Boards — Locating and Erecting Batter-Boards — Batter-Boards Erected to Grade — Locating and Fastening Chalk Lines — Saw-Cuts in Batter-Boards — Putting up Batter-Boards — Reading the Leveling-Rod — Running Long Levels — Curvature of the Earth — Causes of Error in Leveling.

CHAPTER V.

Foundations and the Carpenter's Level — Running Levels with the Straight-Edge and Carpenter's Level — Leveling a Line of Stakes — Marking Batter-Posts — The Rudimentary Plane Table — Sighting over the Carpenter's Level — Operating a Plane-Table — Using the Plane-Table and a Carpenter's Level — Setting Batter-Boards and Stakes — Accurate Sighting over a Level — Sighting Strips Arranged on Level — "Gun-Compass" Level Sights — Level Arranged with "Gun-Compass" Sights — Adjusting Sights on a Carpenter's Level — Home-Made Leveling Telescope — Carpenter's Level Arranged with Telescope Sights and Cross-Hairs — Focal Distance of Lenses — Mounting Lenses in a Tube — A Spectacle-Pipe Telescope — Mounting and Adjusting Cross-Hairs — Focusing — A Rifle Telescope — Use of Tape-Line and Pole — "Squaring" a Line — The Six, Eight and Ten Method of Squaring a Line — New Method of Squaring a Line — The Radius Board — Radius Board for Laying off a Right-Angle — Squaring a Line with the Radius Board — Principle of the Radius Board — Leveling Long and Short Lines.

CHAPTER VI.

CHAPTER VII.

CHAPTER VIII.

CHAPTER IX.

CHAPTER X.

CHAPTER XI.

CHAPTER XII.

and Their Use — Abuse of Pipe Tools — Air and Water Traps — Dead-Ends and Drips — The Steam Loop — Making up Flange Connections — Badly Arranged Pipe Connections — Expansion of Steam Pipes — Coefficient of Expansion of Iron — Boilers Properly Piped — Packing and Regrinding Valves — Making up Pipe Joints — Cutting Gaskets and Packing.

CHAPTER XVII.

Erecting Steam Engines — Foundations to Absorb Vibrations — Suspended Foundations — Always use a Templet — Setting Anchor Bolts with the Transit — Constructing a Templet — Laying Out — Setting up a Templet — Placing Engines upon Green Foundations — Foundation Bolts and Pockets — Who shall Furnish Anchor Bolts — Alining the Engine — Personal Examination of Work during Erection — Cross for Centering Head End of Cylinder — Adjusting the Engine Center Line — Centering Line in Gland — Fastening the Engine Bed in Position — Squaring the Engine Shaft — Checking Alinment of Engine Shaft — Adjusting the Engine Main Bearing — Equalizing the Clearance — Putting on an Engine Pulley — Tightening Pulley Bolts and Links — Putting on the Engine Belt — Engine Governor Belt — Testing an Engine Governor Belt — Running Engines Over or Under — Water Separator and Cylinder Lubricator — Exhaust and Drip Pipes, and Heater.

CHAPTER XVIII.

Steam Boiler Setting — Locating the Steam Boiler — Excavating for Boiler Foundations — Starting the Boiler Brickwork — Plan for Setting a Horizontal Boiler — Fire-Brick Furnace Lining — Side Elevation of Horizontal Boiler Setting — Lugs for Supporting a Steam Boiler — The Back Arch — Boiler Feed Pipe — Boiler Blow-Off Pipe — Cleaning Door and Back Combustion Chamber — Safety Valve and Steam Pipe Connections — Stop and Check Valves — Boiler Grates and Doors — Boiler Stack and Damper — Boiler Feeding Appliances — Connecting the Injector and Feed Pump — Automatic Boiler Feed — High Duty Boiler Feed Pumps — Steam Traps — Coal and Ash Handling.

CHAPTER XIX.

Some Shop Work — Making Wooden Rolls — Rig for Boring Rolls — Turning Rolls without a Lathe — Making Long Rolls — Pod-Auger for Roll-Boring — Boring Straight Holes — Method of Straight Hand Boring — Inserting Roll Gudgeons — Split-Ring for Roll-End — Finishing Wooden Rolls — Lagging Pulleys to Increase their Diameter — Making and Laying-Out Lag Patterns — Building a Wood Pulley on a Flange — Preparing and Using Glue — Hot and Cold Glue — Bits and Boring — Bits for Repair Work — Reaming and Enlarging Holes — Boring Long Holes — Boring thru Knots and Spikes — Small Bits — Sharpening Bits — Repairing Damaged or Worn Bits — Expanding a Bit.

CHAPTER XX.

Water Wheel Setting — Flume Construction — Deck Flume Framing — Turbine Wheel Setting — Gear or Belt Transmission — Pen Stock and Draft-Tube Wheel Setting — Wheel Setting Then and Now — Water Wheel Governors — Framing for Wheel Shafts — Pen Stock Building — Spill-Ways and Waste Waterways — Canals and Wheel Pits — Foundations in Bog and Quicksand — Dams and Aprons — Wire-Cloth Dam for Alluvial Streams — Setting Hydraulic Rams — Ratio of Lift and Fall in Hydraulic Rams — Efficiency of Hydraulic Rams — Water Supply and Pumping for Steam and Fire — Fire Hydrants and Hose — Locating and Piping Automatic Sprinklers.

MILLWRIGHTING.

CHAPTER I.

THE MILLWRIGHT AND WHAT HE IS.

The millwright is a "man who builds mills." So says Webster in his dictionary. Some enterprising millwrights, particularly as soon as they begin to make plans for, as well as to build mills, become tired of the time-honored name of "millwright" and term themselves "mechanical engineers." Webster also says that "Engineering is the science and the art of utilizing the forces and materials of nature." Thus the millwright has a perfect right to the more ambitious title. If he chooses to write M. E. after his name, no man can forbid; but to maintain his title he must "deliver the goods" and prove himself capable of making the very best possible use of the time, material and conditions which he is working with.

The ancient type of millwright has passed away. He has gone with the old-time carpenter and the obsolete shoemaker—the former with 500 pounds of molding planes and wood-working tools, the latter with nothing but pegging and sewing awls, hammer and knife. It used to be said, so leisurely were the movements of the typical millwright, as he pared for hours and days on the teeth of a single mortise-gear, that "A drop of a millwright's sweat would kill a toad." The modern millwright is a pretty lively proposition. He is a wide-awake man who works with brains as well as with his hands. He is supposed to take the more or less perfect plans from the designing engineer—who desires to reserve the title of C. E., or M. E., entirely for himself, and who often refers to the millwright as a "carpenter"—to execute these plans, and in many instances to complete the details and to supply most if not all the minor engineering, to finish the work of the designer, to cover his mistakes and to help him out generally. Often the millwright must make his own plans if he has any. It is therefore very hard to designate just where the mechanic becomes the engineer, but as the millwright utilizes the forces and materials of nature, he is surely an engineer and entitled to the name and credit thereof—when he does the work.

Qualifications of a Millwright.

The millwright must be a worker. There is no room for drones in this branch of mechanical industry. The millwright must also be a student. He has much to learn and no longer has to acquire it all by word of mouth, as was the case with old-school millwrights. The modern millwright must have a pretty good technical education in order to be of use in his vocation. He must be able to calculate strains, strength of materials, and the resultants of forces. As a draftsman the millwright must be able to make and read drawings, to calculate foundations, and to build them. He must also understand how to work in wood and in metal. He must be a good blacksmith, a first-rate carpenter and pattern maker; must know how to put a pattern in the sand and the resulting casting into the lathe.

He must be mason enough to set a steam boiler in first-class shape and steam-fitter enough to pipe the boiler in the best possible manner. The millwright must also be a good business man, and be able to buy machinery and supplies to advantage. He frequently needs to be a good bookkeeper and has lots of correspondence to look after and answer. The ability to handle men is another qualification which must be possessed by the millwright, who must also be able to set up and run all kinds of steam machinery and who also must understand the erection of about every machine ever invented. In addition to this, the modern up-to-date millwright must have a good working knowledge of electricity, and be able to set up and operate motors, generators, transformers, electric lights, bells and all ordinary electrical contraptions.

Study Methods.

To be able to do all the things enumerated above, the millwright must study, and study hard. He must take advantage of what other people have done and begin where they left off. He must read; not only books, but technical papers of all kinds. Above all, when the millwright reads or sees something which he does not understand, he must proceed at once to study the matter and to work back until he arrives at a point where his knowledge equals the demands made upon it. Then, from that point, let him work forward, mastering the subject thoroughly, one step at a time, until he has acquired sufficient knowledge to understand the matter in question.

Let the millwright form the fine habit of studying to the source, anything which he hears or sees but which he does not understand, and he will soon be of greater value to his employer, and capable of commanding a greatly increased salary.

Steel and Timber Framing.

The framing of timber is one of the millwright's most frequently used accomplishments, and modern practise demands that the millwright be able to design and construct concrete piers and other structures. Structural steel also must be mastered so that it can be handled when called for. Lots of machinery nowadays is set upon steel instead of timber, and the standard connections used in steel work must be familiar to the millwright so that no time may be lost in getting ready for such work when called upon to do it.

Steel bridge-trees and harness work for shafting is so different from the old-time wood construction, that considerable study must be put in upon the strength and stiffness of steel shapes. Even in steel, or in concrete, what answers for today may be obsolete tomorrow, calling for constant study upon the part of the millwright in order that he may be up to date with the latest plans that are put out by structural concerns. Even with the time-honored wood construction there have been great changes in construction. The time-honored mortise and tenon have almost entirely disappeared in mill work, and the "box," "dap" or similar uniting, reinforced with a bolt or two, has taken the place of the timber-weakening mortise. In fact, so greatly has the method of framing changed that the writer cites the instance of a large factory of which he is now completing the plans, and he cannot call to mind a single mortise and tenon in the entire framing.

Thus the millwright must be on the alert, all the time, constantly absorbing new things and advanced practise. He can not afford to ignore what is going on around him, or he may fail to recognize some valuable item of progress. The millwright must be a hustler—first, last, and all the time.

CHAPTER II.

FACTORY LOCATION.

Not the least of the millwright's duties, and one which he is frequently called upon to carry out, is the location of a factory, buildings, yards, and perhaps railway tracks and even a canal, wheel-pit and tail-race. Such work properly belongs to the engineer who has to aid him in the transit and level, and a well equipped force of men, engineers and draftsmen, who are specialists in that kind of work. But this makes no difference. Frequently the millwright has it all to do, and the better he is fitted for such work, the better will be the results he achieves.

For laying out factories, no general rules can be given. Each proposition must be studied in the light of its own surroundings, and the best any millwright or any civil or mechanical engineer can do, is to obtain the very best results possible from the conditions and material which are present. No man can do more, and the result, whether achieved by an eminent engineer or by an humble millwright, is somewhere between best or worst, according to the skill with which the work is done. The writer has seen factories which were laid out by both kinds of men noted above. He has seen some millwright results which put to shame some work put out by the engineers—and he has also seen some which told exactly the opposite. But, good millwright or good engineer, the result is good. Bad engineer and poor millwright turn out bad results, almost invariably.

MOVEMENT OF MATERIAL DURING MANUFACTURE.

One fundamental rule to be followed in laying out any factory, manufacturing plant, or other industrial undertaking is this: In all plans and designs, see that the course of the material under operation is forward, in one general direction, from the point where raw material is received toward the shipping platform where finished products are to be delivered, ready for shipment. It must be kept well in mind that any deviation of the course of material, from a straight line between these two points, surely results in increased cost of construction. It costs money to handle material, even to convey it from machine to machine in the factory, to elevate it from one floor to another, and even to put in and take out of machines. Therefore, if the material, through bad planning, must be carried up to another floor of the factory after having once been there in the regular course of progression, then the efficiency of the layout is not as great as it might be, and the man who laid out the factory, or the process, is at fault.

If material, after having passed a given point in the factory, has to be carried back again to some machines which have been passed in the journey of progression, then the factory scheme is defective. It may be very slight, but it is capable of improvement, and evidently is not "the best possible arrangement of the forces and materials of nature," hence the result is poor engineering—or poor millwrighting.

SAWMILL ARRANGEMENT.

If a sawmill is to be built, the millwright will see to it that the logs come into the mill in the easiest possible manner, and so that they do not interfere with the exit of the finished product. It certainly is very poor judgment to so arrange a mill yard that the slabs from a log band-saw interfere with the hauling of logs into the mill. It is not at all desirable to find a mill floor so arranged that the finished product from a flooring machine seriously interferes with the room necessary for feeding material to a stave saw. Such things determine the skill of the man who has been entrusted with the work, to do which acceptably he must use brains.

LACK OF WORKING SPACE AROUND MACHINES.

A frequent cause of poor factory arrangement is the failure of the designer to properly comprehend the amount of working space necessary between and around the several machines. Many factory layouts, which look splendidly on paper, are found utterly worthless when executed, owing to the serious lack of room for the handling of material in process of manufacture. It requires much more space than appears necessary at first sight, and the inexperienced designer almost invariably fails to give working space enough—he never was known to give too much.

CHAPTER III.

LAYING OUT THE BUILDINGS.

Much of this part of the work has already been decided upon as shown in Chapter II, therefore this chapter will deal more with the actual work of laying out the foundations. A man has before him four ways of doing the work which it is proposed to name and describe in the order of their value, the first method being the best should be used by all means, provided the tools, instruments and appliances necessary for the work, can be obtained.

METHODS OF LAYING OUT FOUNDATIONS.

I. By the use of the engineer's transit.
II. By the use of the builder's level.
III. By the use of the carpenter's level.
IV. By the use of the tape line and pole.

There are, however, several things in common with all four methods which will be described in the first method. Other things will be described as they are reached in the several methods. The first methods, as above, are by means of the engineer's transit and level, the latter commonly known as a "Y" level. It is known by that name for the reason that the frame supporting the telescope, somewhat resembles the letter Y. The first, as stated, is the best and most costly method (for the instrument, the operation itself is the cheapest) of all and it is preferable to all other ways of laying out buildings, foundations, or any other work whatsoever.

But the millwright does not always have an engineer's transit in his tool box. Such an instrument costs anywhere from $100 to $600 although the writer has upon several occasions obtained a good serviceable second-hand transit for $60 and the purchase can frequently be duplicated in the second-hand stores of large cities.

There is, however, a form of instrument known as "Bostrom's Improved Builders' Level," which is evidently for millwrights' use, as well as for architectural work, and which in addition to laying out any building he will ever be called upon to construct, may also be used for the aligning of shafting and other millwrighting work.

THE BUILDER'S LEVEL.

This little appliance, which is used in the second method to be described, is made in Atlanta, Ga. It is given to the trade as an absolutely reliable instrument for architects, builders, carpenters, stone-masons, and, we may add, millwrights. It can be used for any kind of foundation work and for getting angles. It is simple in its construction, easily understood and can be operated by anyone who will be likely to be called upon to lay out a building. It is made of oxidized brass and has a silvered circle of degrees. It has an achromatic telescope of ample power for such work, and the price, including plumb-bob, tripod, graduated measuring rod and target is only $25. While this is not a high-grade instrument, it is sufficiently accurate for the purpose, and any building operation can be carried out with one of these instruments which is within the reach of any millwright, and should be a part of his stock of tools.

But very little space will be devoted to this the second method of laying out foundations, as the man who has purchased one of the builder's levels will soon qualify himself to use that instrument, which is used in much the same way as the engineer's transit; therefore the directions given for laying out lines with that instrument apply also to the builder's level. Space can not be given here for teaching the use of the transit or the level, which is, however, a matter easily acquired, and anyone who is possessed of Trautwine's Engineers' Pocket Book, or any other good reference book for the civil engineer will have no trouble in learning to use the instrument so as to do the work before him. Therefore, it will only be stated here that there should be established—for this method and for the other methods as well—two base lines at right angles to each other. These base lines really should be called "center lines," and while they may not be the center of anything in particular but may be established outside of the building if necessary, they should be so made that all measurements and angles necessary to the erection of the building and machinery should be taken from these two lines which are established at right angles to each other.

CENTER, OR BASE LINES.

This once done, and the lines squared with sufficient accuracy, all other lines and distances may be laid off from one or the other of the two lines without any further measurement of angles except for those which are other than 90 or 180 degrees. By measuring from both these lines, the measurement from each line being parallel to the other line, it will be readily seen that any point may be located with great accuracy. Two such lines should be established before anything else is done toward laying out the building. These lines should be marked with permanent targets, so arranged that there will be no disturbance of them during the entire subsequent building process.

It pays to go to considerable trouble to put in stones of sufficient weight that they may stay in place, no matter what operations are carried on above or around them. Such stones imbedded in the ground, level with the surface thereof and marked with a point, above which a plumb-line may be suspended, are all that is required to permanently locate the two lines required for laying out any building by either of the four methods described below.

I. LAYING OUT FOUNDATIONS WITH THE TRANSIT.

Procure two stones, as described above, for each line to be laid out and locate them far enough apart to be out of the way of the building operations, and if convenient, the line between the two stones should pass through some portion of the building where the transit sight will not be obstructed by walls, posts, machinery or partitions. If the line can be made to pass through doors or windows so that sight can be had from one stone to the other, then the ideal conditions are present. When this cannot be done, the line should be established to one side, far enough away that sight can be had past the outside of the building.

A good way to accurately locate the points in the line where the stones are to be placed is to put in the stones fairly close to the line, using the transit to bring them to the line; then locate the exact point on each stone and drill a hole therein. Place a piece of iron in the hole level with the top of the stone; fill around with lead or cement and locate the exact point in the piece of iron with a center punch. Care should be taken to locate these stones a known distance apart and an even number of feet, in order that the line thus measured may be taken as a base line if necessary during subsequent operations.

Secondary Lines.

If the mill is to be very extensive, it will be necessary to lay out other lines from the two above described. Sometimes it is not necessary to mark these "secondary lines," as we may call them, with such exactness as was necessary with the first two lines. Still, the time spent in permanently locating the centers will never be regretted. It is to be understood that all future measurements are to be taken from these centers and that the factory is to be erected from them. In fact, everything pertaining to measurements in or around the factory is to be measured from the two lines thus located. A secondary line may be necessary in some factories, and even a third or a fourth line will be needed if the mill be an extensive one. But these are all laid off and measured from the main lines already described. While it is an excellent custom to permanently locate the lines from which the shafting is to be erected with fixed targets for each main line of shafting, still it is not absolutely necessary. But with the targets permanently arranged, the shafting can be quickly adjusted at any time by the use of the transit. The periodical alinement of shafting, which is necessary in every factory from time to time, needs only the placing of the transit on one of the stone stations, the picking up of the center mark on the other stone by the cross-hairs of the instrument, then a stick held horizontally against the shaft to be alined is all that is necessary for the quick and perfect placing or testing of the shaft.

Permanent Stations or Targets.

Fig. 1 represents a form of permanent station or target which can be used to advantage—just a word more in regard to the station or target business: The engineer uses the word "station" or "bench-mark," while the millwright is apt to term a point a "target," for the reason that to mark such a point, he is in the habit of nailing a piece of board upon a timber and marking the line thereupon as shown by Fig. 2, in which *a* represents the piece of board referred to; *b,* the timber, and *d,* a line marked upon the board. This line is usually made by marking down beside a spirit level (plumb) with a pencil, or the line is located with a plumb-bob and afterwards pencil-marked upon the board *a.*

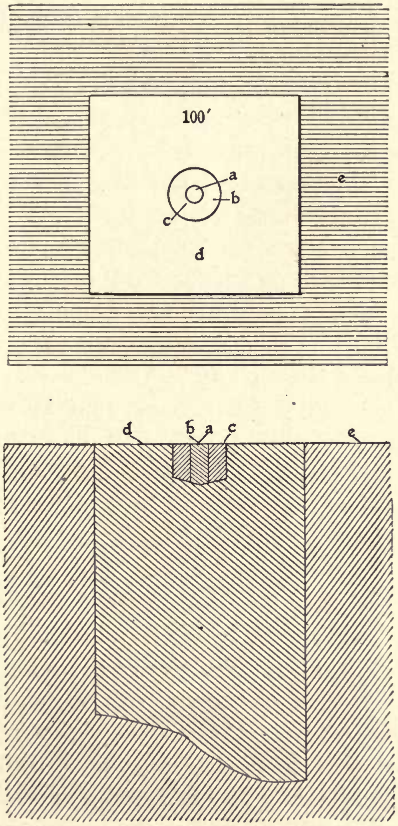

FIG. 1.—PERMANENT STATION OR TARGET.

At the point from which a string is to be suspended or attached, to lead off to a similar target at the other end of the line, he makes a mark that can be more easily attached to than that of a pencil. As soon as he is certain or satisfied that the string is in its proper place, he marks it by means of a saw-cut, *c*, which is let into the top of the board as shown. This cut is for convenience in attaching a string, which is simply slipped into the saw-cut and pulled tight against a loop knot which should always be tied in the end of such a string. The other end of the string should be slipped into a similar saw-cut in another target and made fast by winding the string a couple of times around a timber, or around a couple of nails placed convenient to the saw-cut for that purpose.

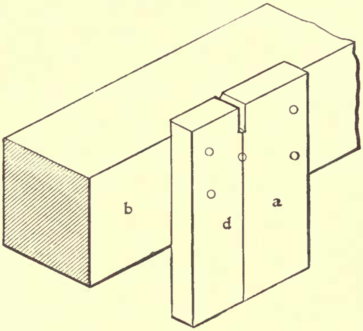

FIG. 2.—THE MILLWRIGHT "TARGET."

Station Points and Stones.

The point in Fig. 1 may be called a target if desired, but more strictly speaking it is a station point. The indentation in the iron is shown by *a,* the iron itself by *b,* and the cement or lead setting by *c.* The stone is represented by *d*, which usually is a portion of a cobble, split six or eight inches square; the only requirements being that it is large enough so that it will stay in place and not be unduly moved by the work of teams or men around it, or by wet weather and frost.

This stone is represented, both in plan and in elevation or section, as set in the ground *e*, which is tamped closely around the stone at the time it is set, which should be a considerable time before it is used in order that there should be no change in position of the stone through the settling of the ground. Not only should the soil be well tamped, but it is well to fill the hole with water after the stone has been put in place, and throw the dirt into the water, "puddling" the dirt into position, thereby securing as firm a setting as possible for the station stone. The drilling may be done before the stone is set, but the iron plug should not be put in position until afterwards, in order that there may be opportunity to correct errors of alinement in setting the stone by moving the iron center one way or the other as necessary.

Arrangement of Stations and Sub-Stations.

Fig. 3 illustrates a method of arranging stations and sub-stations for the erection of a factory of considerable size. Owing to the peculiar arrangement of the building it was not possible to run the main line through the center of the building or even through the buildings at all, therefore it was put to one side as shown by 1, 2. The other main line however, the one at right

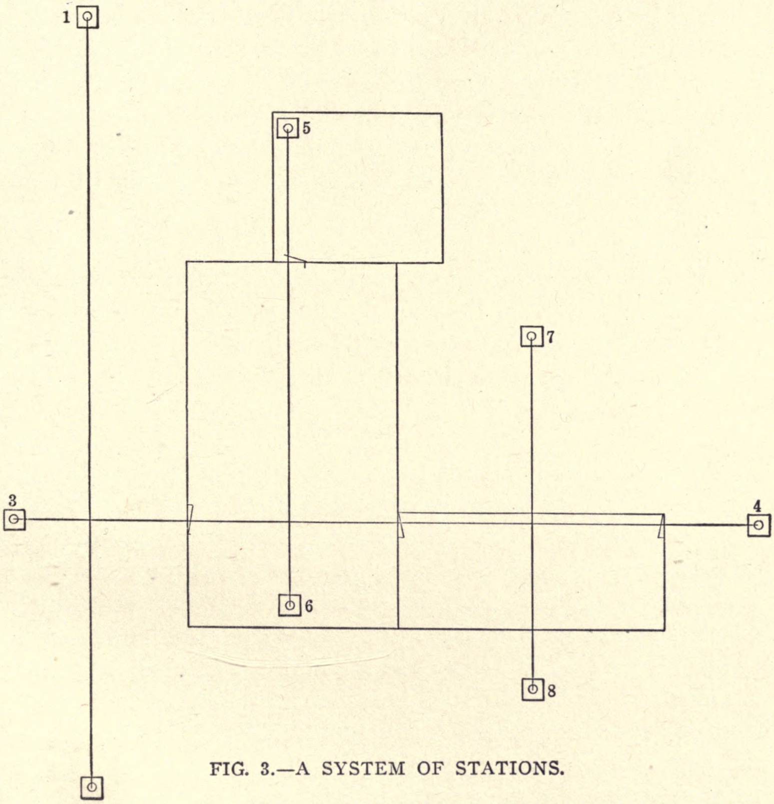

FIG. 3.—A SYSTEM OF STATIONS.

angles to 1, 2, could be put through the building, the doors coming in line, and this circumstance was taken advantage of as shown by 3, 4, which represents the stones and stations previously described. For the alinement of shafting in the two main buildings, a short line, 5, 6, was put through, taking advantage of a door between the two buildings; and another short line, 7, 8, was placed through the ell, two windows coming in line with the stations which were located out of doors. These four lines were laid out very accurately with each other as will be described, so that either one may be worked from with the assurance that the result will be parallel, no matter which line was used.

If it be found desirable, other lines should be put in, for it is not desirable to work more than 20 or 30 feet on either side of a line or sub-line, and when there are 60 or 70 feet between sub-lines, then it is desirable to add other lines as circumstances may demand. The manner of laying out stations and sub-stations is also shown by Fig. 3. The first thing is to determine roughly the lines 1, 2; and to set up the transit on Station 1, which may have been put in bodily, the iron plug put in place and the center-punch mark duly made. The transit is then sighted in the direction the line is to run, the hole dug for post 2, the stone put in place and the center of the drill-hole brought to correspond with the cross-lines of the transit.

A STATION-ROD.

After the dirt has been thoroughly puddled around stone 2, the iron plug may be set in place and the center-punch station-mark permanently made. To lay out stations 5 and 6, an entirely different method should be employed. For this purpose, the writer prefers to proceed as shown by Fig. 4. A long stick about three-quarters or one inch square is dressed up from dry lumber. Pine (white) is the best, and should be used if it can be obtained without too much trouble. This stick is made exactly square and parallel from one end to the other in order that it may slide readily through the gage-head *f*, shown in small sketch A, Fig. 4. A marking point *g*, is placed in the gage-head in place of the usual scratch.

The gage-head is free to slide the entire length of the rod and to slide easily, but the head may be locked at any point by means of the thumb-screw shown. The other end of the stick, or rod, has a line squared around it as shown at *e*. Two bits of wood are glued and nailed to opposite sides of the rod and the mark squared around them also. These pieces are for the purpose of "squaring" the rod to the transit, as will be made plain later. The line around the rod at *e* is merely a knife-mark extending entirely around the stick. The mark had best be made before the side pieces are added, then the line should be extended across them after they are fastened in place.

The use of the rod may be best understood by referring to the main portion of Fig. 4, where the transit being set up over station 1, at *a,* and sighted to the center-point at station 2, the rod or pole is placed at *a c,* extending from station 1 to station 3. The point *g* upon the gage-head is brought to the center of the drill-hole in the station stone, then the rod is carefully lifted and carried to the other end of the line where it is put in position as shown by *bd;* the end *b* of the rod is so located that the mark on the rod is "picked up" (sighted into line with the transit cross-hairs), then it is noted whether the point at *d* comes in or near the drill-hole of station stone 4. If the point comes too close to one side of the drill-hole, it must be set back a trifle, and then the iron plug placed in one side of the drill-hole at *d,* and upon the opposite side of the drill-hole at station 3.

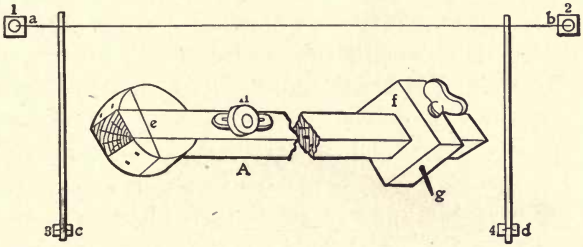

FIG. 4.—LAYING OUT SUB-STATIONS—STATION-ROD.

Using the Station-Rod.

If the rod is used in connection with the transit when setting the station stones, there will be no trouble in this direction, and the holes can be brought into alinement while the stones are being set. But great care must be taken that the measuring rod is at all times level and held perpendicular to, or, as the millwright calls it, "square" with the transit line. To make sure of the latter condition, the strips of wood on the measuring-rod were placed at *e*, as described. The manner in which the pieces help square the rod is by lengthening the line which has been drawn around the rod, thus enabling the transit-man to help the rodman square the rod by means of the line mentioned.

If the rod lies perfectly square (perpendicular) with the station line, the mark on *e* will coincide with the cross-hairs in the transit. But if the rod leads off at an angle, no matter how slight, the transit-man can detect it and direct the rodman to move one end of the rod to the right or to the left as may be necessary in order to make the entire length of the mark *e* coincide with the cross-hairs. The longer the mark at *e* the greater the accuracy in bringing this line to bear with the cross-hairs, hence the lengthening of that line by the addition of the pieces in question. Be sure that the rod is level while taking measurements. A small level, known as the "which way" level, is screwed to the rod as shown at *h*. These levels, as the name indicates, act both laterally and crosswise, hence the name—"which way." They are in use a great deal upon photographic cameras and can be purchased for a very small sum.

Long and Short Station-Rods.

For some kinds of work a long rod will be necessary, while in other cases a short rod will answer as well. The writer has used long rods, short rods and sectional rods which could be spliced together to any desired length, but he found it better to make at least three rods, one 30 feet in length, one 10 and one 20 feet. With these three rods any distance up to 30 feet may be handled on each side of the line, making 60 feet reach in all. For longer reaches than 60 feet, there should be, as stated elsewhere, another station line put in, as 30 feet is enough to measure with a pole.

Laying Down Cross-Lines.

Having put in stations 1 and 2, Fig. 3, also stations 5 and 6, the stations 7 and 8 can be put in in the same manner that stations 5 and 6 were placed. Next comes the locating of the cross-station line 3 and 4. There are several ways of laying out this line; the way most in use is to set up the transit on station 2, pick up station 1 with the transit cross-hairs, turn the graduated limb of the instrument 90 degrees and use the pole and scratch point for locating stations 3 and 4. Another way is to set up the instrument on station 3, with the instrument directly over the center-punch mark which has been put in place. Then use the rod in picking up stations 1 and 2, reversing the transit to do so. When this has been accomplished, turn off 90 degrees on the transit limb and establish the marks 3 and 4 as directed for locating other stations directly in the transit line. It sometimes happens that station 2 can be used for both lines 1 and 2, and for 3 and 4. In cases of this kind, it will only be necessary to turn off 90 degrees on the limb of the transit and put in station 4.

Advantages of the Station-Rod Method.

Another very good way is to put station 3 directly in line with stations 1 and 2. Then lay off the 90 degree line with a single setting of the transit on station 3. This is a handy method and should be used whenever possible. Millwrights and engineers as well will find this rod method of laying out foundations a very handy way. It is fully as accurate as turning two corners with the transit and measuring the distances with the steel tape between the lines of the stations. It also has the advantage that it does not require one-half the time. The station-rod shown by Fig. 4 is also excellent for alining shafting. It may be used as shown with no change whatever where the ends of the shaft can be gotten at, and, with the addition of a little appliance to be described later, nothing further is necessary for getting shafting into line accurately and speedily.

CHAPTER IV.

THE BUILDER'S LEVEL AND FOUNDATIONS.

The Builder's Level, as briefly described elsewhere and as shown by the engraving of the instrument, which enables the millwright to see exactly what the tool looks like, is a small level with a graduated limb attached. This being the case, the directions given for laying out foundations with the transit will apply equally to the builder's level. But nothing has been said yet about finding the level of the foundations. This part of the work will be described later, and it may be done either with the transit, the Y level, or with the builder's level. It may be done at the same time or just after the foundations are laid out.

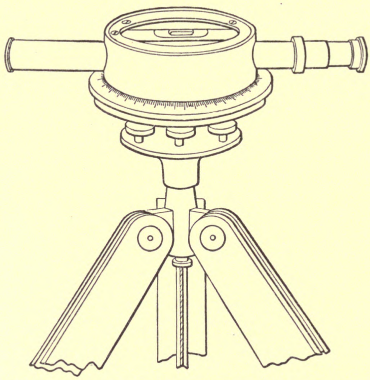

FIG. 5.—THE IMPROVED BUILDER'S LEVEL.

When working with the builder's level, the station stones may be put down exactly as described when they are located with the transit. The iron plugs may be put in, the punch-marks located exactly as described and the several lines may be picked up and located in precisely the same manner. In fact, the entire description of the method employed with the transit may be applied directly to use with the builder's level.

COST OF STONE STATIONS.

It is extremely possible that the cost of putting in the stone stations above described will be more than the management desires to be subjected to. This is extremely likely, and in eight cases out of ten the millwright must content himself with wooden stakes driven into the ground, and nothing more permanent is usually provided, even for future use. This is surely a mistake, but often the owners cannot be brought to see it, neither can they be compelled to put in the permanent stations which are desirable in more ways than one.

When wooden stakes must be used for stations, procure them at least 3 inches in diameter. A square stake is best, but of course round stakes can be used if necessary and they may be cut from pieces of cord-wood if nothing better can be obtained. The iron plug and center-punch mark is dispensed with and a tack driven into the end of the stake answers the purpose, though considerably less accurate than the plug and center-punch mark. The writer brings to mind one instance where the management would not stand for putting in station stones, but they were induced to put in concrete blocks wherever it was desired to have a permanent station located.

CONCRETE STATION STONES.

To this end, holes were made with an ordinary post-digger; a hole about 8 inches in diameter and 18 inches deep was dug into the soil which was quite free from stones. These holes were located with the instrument and were placed very accurately. Some concrete was mixed up, being made of sand and gravel, and the holes filled with that mixture which was tamped into place as solidly as possible.

After the concrete had partially hardened, a railroad spike was driven in, in place of the iron center called for by the stone-post method. In some instances common spikes were used, and in a few cases bits of round iron were cut off a ¾-inch rod and driven into the concrete for the center-plugs. After the cement had set for three days, the spikes were marked with a center-punch in the manner described for method I. This concrete method of making station stones is a very desirable one and does not cost as much as to split out ordinary stones, dig holes, put the stones in place and puddle them fast in the ground. Gravel concrete is plenty good enough for stations of this kind and they are very cheap, the only expenditure being for the cement which should be mixed with the sand in the proportion of about one to four.

THE DETERMINATION OF FOUNDATION LEVELS.

Having found the points upon the stations corresponding to the several lines necessary for the work, some attention may be given to the leveling before going further with the foundation work itself. Where the characteristics of the ground will permit, the entire factory arrangement should be placed upon the same level, but where the ground is uneven, it may be found necessary to lay out a portion of the factory on a higher or a lower level than the rest of the building. This matter will, of course, be governed by the plans. It is the millwright's business to find the hights or grades given by the drawings and to reproduce them at the building site by means of stakes, targets, or other marks to which the workmen can bring the several grades proposed or required in the building operations.

The entire operation of leveling by means of a transit or by the Y level or the builder's level can be brought down to a very simple matter. First, the instrument itself is brought to an accurately level position by means of the screws or other means provided for that purpose. Then the cross-hairs in the telescope are brought to bear upon a mark on a stick or a target which in turn has been placed vertically upon one of the station marks. The stick or rod is then carried to another station and the telescope of the leveling-instrument is revolved, without permitting it to depart from its level position, until it bears fair upon the rod in its new location. A second sight is then taken at the rod upon the second station, and the point where the cross-hairs cut the rod is noted. The difference between the two points on the stick or station-rod represents the difference of level between the two stations. The marks made with the instrument sighted at stations 1 and 2 will represent the hight of the cross-hairs of the instrument above the stations mentioned. It is not necessary that the hight of the instrument be any particular figure. In fact, it may not even be known, and no attention may be paid to that matter as all the calculations and measurements can be made without this distance being taken into account.

Almost any stick may be used for a station-rod or leveling-rod, but good tools always pay, and if the millwright does not feel inclined to purchase a leveling-rod with his instrument—a small one is included in the cost of the builder's level, while an elaborate affair is usually supplied extra with the transit or with the Y level—then he may easily construct a serviceable rod for himself.

Home-Made Leveling-Rod or Staff.

Fig. 6 will give an idea of how to make up this instrument. The square rod *a* is about ¾ or 1 inch on a side, while for heavier work it would be well to have a larger rod, say 1¼ or 1½ inches square. Another ordinary gage-head is used, and in the engraving the same head is used which was shown in Fig. 4, the scratch point *b* having been removed by unscrewing it, the hole remaining visible at *c,* as noted.

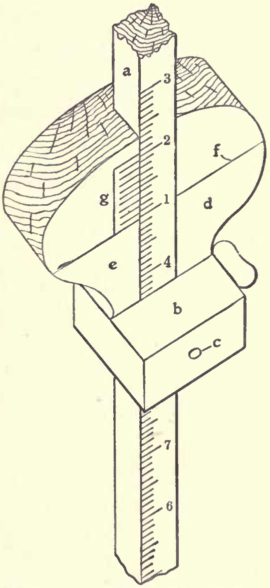

FIG. 6.—LEVELING-ROD.

An oval with rather extended width, is cut out of pine lumber, say 1½ inches thick, and a square groove is cut through its center to receive rod *a,* as shown in Fig. 6, in which *e d* represents the pine oval in question, with the rod *a* sliding through it flush with the face of the disk or oval. Commencing at the lower end, the rod is graduated into feet and tenths of a foot, although architects sometimes use rods graduated into feet and inches, but the decimal form of notation will be used in the following paragraphs. The rod divided in feet and tenths is known as the "engineer's rod," while the feet and inch division belongs to the architect's rod. The same rod can be graduated upon two sides and both forms of graduation used as either is desired.

THE VERNIER SCALE-MAKING AND READING.

On the front side of the rod, the heavy shaded figure shows one of the foot marks, the lighter figures and graduation denote inches or tenths of a foot, according to the graduation used, the reading upon the rod as shown by Fig. 6 being upon the decimally divided graduation, and denotes 4.09 feet. At *g* is shown a short scale, known as the vernier scale; this is easily read off by the millwright. It is contained upon a purchased rod, but may be easily constructed if necessary. To lay out a vernier, simply lay down eleven of the ten parts into which a unit is divided, then divide the space thus laid out into ten portions, the same as the inch or other unit is divided. In this case, one-tenth of a foot and one one-hundredth of a foot (or one inch and one-tenth of an inch) is laid off on the little scale *g*, and then spaced and divided into ten equal portions as shown in the engraving.

Each space upon the vernier scale *g* now represents 11/10 one-hundredths of a foot (or tenths of an inch). To read the vernier, by means of which the millwright is enabled to read the rod down into thousandths of a foot, it is only necessary to take the reading on rod *a*, to the line *f*, which is the mark which is the closest to a line; that is, read to the line on *a*, which is first below *f*. This gives feet, tenths and hundredths of a foot—or tenths of an inch. To get thousanths of a foot or hundredths of an inch, start from the bottom of the scale *g* and count up to that one of the lines in the vernier scale *g* which coincides with one of the lines on *a*. The third line upon *g* coincides with a line on *a*, thus three one-thousandths of a foot is to be annexed to the direct reading taken from the rod *a*, and the line *f*, on the disk, making the complete rod reading 4.093 feet. Thus, in taking any reading, the rod reading is taken first, then the vernier reading is added or annexed to the rod reading.

USE OF THE LEVELING-ROD.

Fig. 7 will give a slight idea of the manner in which the leveling-rod is used in laying out foundations. This engraving represents a portion of a foundation in plan, also in elevation, the latter showing a portion of wall 100 feet above datum line and another portion of the same wall, 101 feet, 5 inches above datum line. By datum line it is understood that an imaginary line is taken far enough below the foundations that nothing about the building will ever be placed lower than the line in question. This line may be assumed at any level below the foundation, and

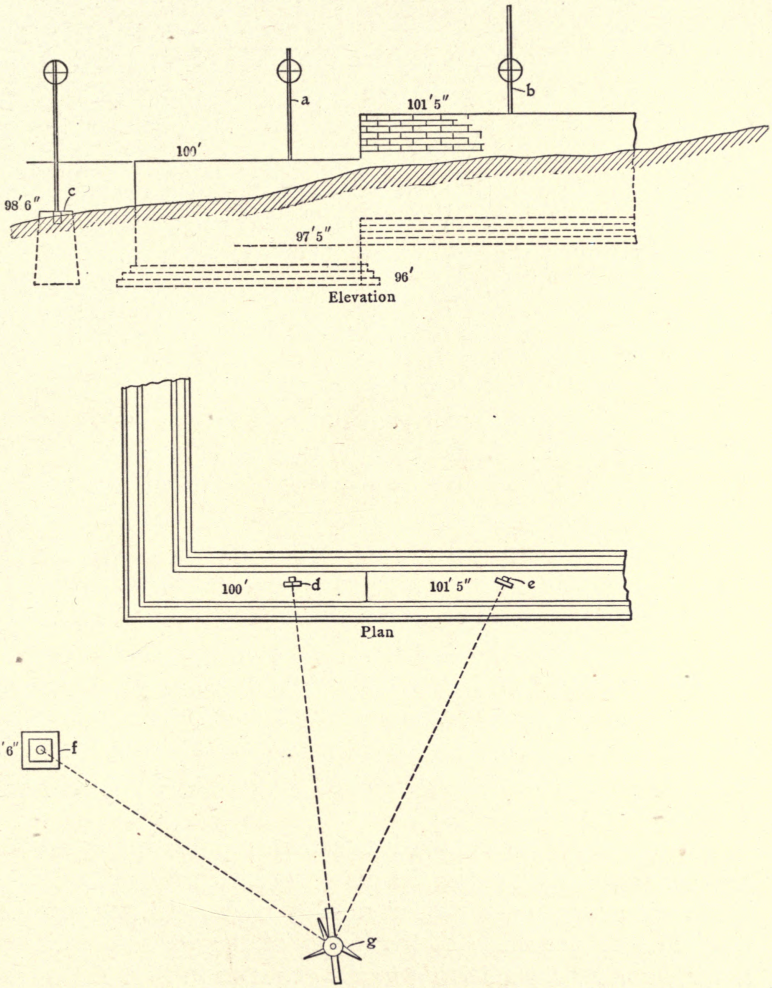

FIG. 7.—LEVELING FOUNDATIONS WITH A CROSS-HAIR INSTRUMENT.

in this case it has been assumed that the datum line is 100 feet below the foundation, or that portion of the foundation which is marked with that figure.

A leveling-rod is shown at *a* on the 100-foot level and also at *b* on the 101-foot, 5-inch level. At *g* is one of the station stones previously described, and its level is 98 feet, 6 inches as marked. It will be noted that the bottoms of the foundations are respectively 96 feet, and 97 feet, 5 inches, thereby giving the same hight of foundation both at the 100-foot level and at the 101-foot, 5-inch level. Referring to the plan view in Fig. 7, an instrument is shown upon its tripod at *g,* and directed at the leveling-rod *d* upon the 100-foot level. First, however, the transit or level should be directed to station *f,* and a reading taken upon the rod, the instrument being leveled at *g,* and there may be indicated upon the rod, 4 feet 2 inches, or, if an engineer's rod be used, 4.166 feet, this measurement being recorded in the book and the rod moved to *a,* and another reading taken to test the wall at that point.

As the level required at *d* is exactly 100 feet, it is evident that the wall at that point should be 18 inches higher at the point than at station *f,* and that the reading on the rod at *a* (or *d*) of 5 feet 8 inches, may be shortened 18 inches, becoming 4 feet 2 inches, and this distance may be read off upon the rod and the sliding head adjusted to that length of rod. Then placing the rod at *b,* plan view, and pointing the instrument toward it, the cross-hairs of the instrument should cut the line across the disk of the rod if the level or hight of the wall is as required. If the wall is higher or lower, the sliding head of the rod must be moved up or down to make the cross-hairs of the instrument intersect the center line of the disk, and the error in the hight of the wall is the difference in reading of the rod, from the 4 feet 2 inches mentioned above.

In a similar manner, the instrument may be swung around and pointed toward *e* (in the plan) which corresponds with *b* in the elevation, and a similar reading taken. In this manner, required tests are made of the hights of the walls in question. It will be noted, by referring to the elevation in Fig. 7, that the disks on all three rods shown in their different positions are at exactly the same level. This is the principle of leveling with a cross-hair instrument. The disks are at all times, by means of the instrument, brought to the same level, no matter where they are placed; therefore the hights of the several walls or stations can be read directly from the rod, and by subtracting one from the other the difference in elevation between any two of the points or levels is readily ascertained.

Perhaps the above statement should be qualified a little, for instead of reading directly upon the rod the hight of any station or wall, there is read the hight of the instrument above that wall or station, and by adding this reading to the hight above datum line of any known wall or station, a working distance is obtained from which the readings obtained from the different levelings will give directly the hights of the points or walls from which such readings were taken. It therefore becomes apparent that every time the instrument is set up it may be at a different hight, and a new reading must be taken from some point of known hight before the level of any wall can be compared to the required level.

Plumbing the Level-Rod.

Referring again to Fig. 6, the leveling-rod and its horizontal line, it will be noted that this line is placed across both sides of the disk, and that the disk is extended considerably on each side of the rod. This is for the purpose of enabling the transit- or level-man to note whether or not the rod is placed in a perpendicular position, and the transit-man will instruct the rod-man to move the rod in such a manner that the horizontal line will be brought to coincide with the horizontal cross-hair of the instrument, much in the same manner the vertical cross-hair was brought into use when the measuring-rod was squared up as already described.

Batter Boards.

In order to properly lay out the foundations for a building after the station stones have been put in place, it is necessary that some means be devised for fastening lines which must be stretched tightly in the direction in which the masonry is to be built. For this purpose a couple of boards and some stakes are erected, usually as shown by Fig. 7, which represents the average method of doing a job of this kind. The boards as erected are shown at *a* and *b*, and are known as "batter boards." It will be noticed that the stakes have been driven in any old manner and that the boards were nailed on haphazard without regard to level or distance from the lines. Batter boards thus erected are always a nuisance. First, they are sure to come in the way of the dirt heap; next, the boards being placed too low, the masonry runs up above them and they are useless in that direction.

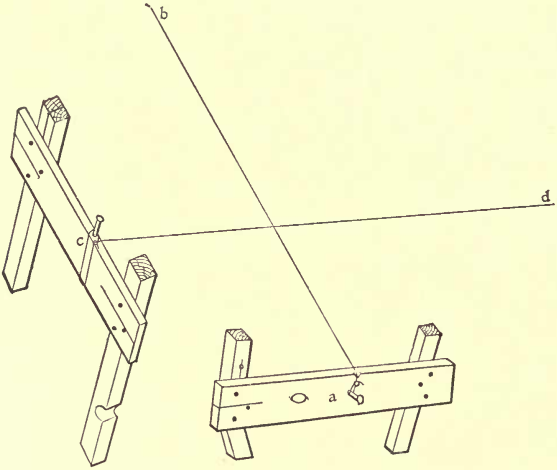

FIG. 8.—THE USUAL APPEARANCE OF BATTER BOARDS.

Locating and Erecting Batter Boards.

But to proceed with these batter boards: From the station stones, lines are run parallel to *a* and *b,* which in Fig. 7 represents one of the chalk lines (or other lines) in position for the face of the wall, stretched tightly from batter board *a* to another batter board at the opposite end of the wall. A similar line is stretched from board *c* to another board placed beyond *d,* which is not shown in the engraving. Chalk lines *a b* and *c d* are then squared up with the transit in the same manner as that described for locating station lines and stones. Line *a b* represents the location of the face of one of the foundation walls, while line *c d* represents the face of the cross wall—the same wall, in fact, which is shown by Fig. 7. But the batter boards as arranged in Fig. 8 are an unmitigated nuisance and should not be tolerated.

The proper method of arranging batter boards is shown somewhat in detail by Fig. 9, and an entirely different arrangement is shown by this engraving. The batter boards are set nearly square and the ends are brought to a level. They are also set back out of the way of the earth which has been thrown out and the boards are also out of the way of material which must be placed near the excavation.

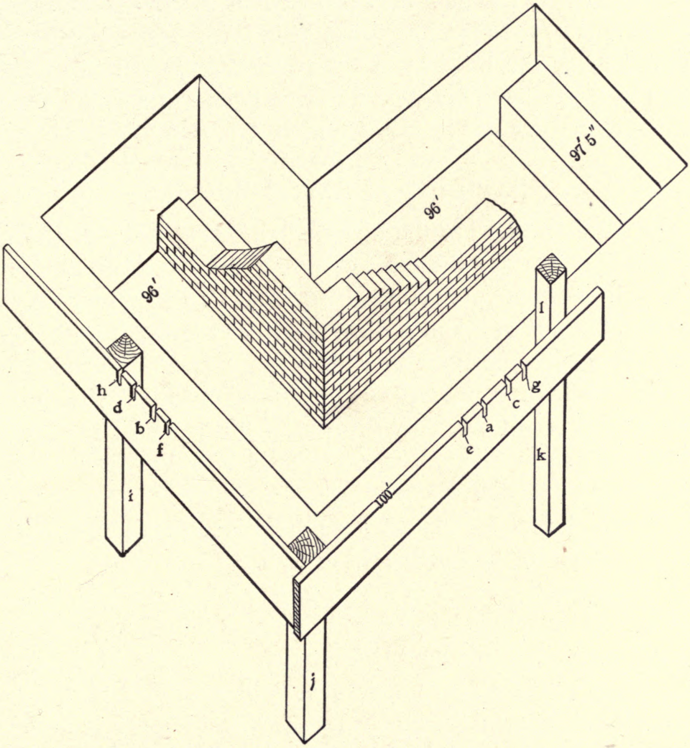

FIG. 9.—BATTER BOARDS ERECTED TO GRADE.

It will be noted that the top of one of the boards is marked "100 feet." This part of board *a* is level with the top of the wall when it is completed. Instead of two boards and four posts, both boards are nailed to a common post *j*, thereby forming a braced corner which is very stable. Posts *i* and *k* are set back out of the way of the lines. In the preceding engraving the chalk lines are shown wound around the batter boards and attached to nails driven into the boards for that purpose.

LOCATING AND FASTENING CHALK LINES.

Nails may be used in the arrangement shown by Fig. 9, but after the lines have been located, we will take the line *a,* for example, which corresponds to a similar line in Fig. 8. This line, after it has been located on batter board *a,* also upon the distant batter boards, is marked with a pencil in the precise location it is to occupy. After the line *b* has been located in a similar manner, and after the lines have been marked on the other batter boards in a similar manner, a saw-cut is run in a small fraction of an inch as shown at *e, a, c, g* and at *f, b, d, h.*

SAW-CUTS IN BATTER BOARDS.

The cuts *a* and *c* are the outside and inside faces of the wall. The cuts *e* and *g* are the outside and inside faces of the footing of the wall, so that in starting the brickwork the mason only has to stretch the line at *e* and *g,* then after the footing has been completed, he moves the lines to cuts *a* and *c* and goes ahead with the body wall. He proceeds in a similar manner with lines at *f* and *h,* and *b* and *d.* This throws all the work of the location and level of the wall upon the engineer or millwright, also the responsibility therefor.

Once the batter boards are accurately located, there is nothing more to do except to construct the wall. To erect batter boards in this manner, the post *j* is first located and driven and the posts *i* and *k* are afterwards located and driven solidly into the ground. It is not necessary to square these posts by means of the instrument. Any angle 85 to 95 degrees will answer and the posts can be placed accurately enough by the eye, the only requirement being that they are set back out of the way of workmen and material.

Boards 12 to 16 feet long should be used and placed as far back as possible and still have room for the lines upon them. The posts having been located, take a reading on *j* with the leveling-rod, the instrument being set up to read from one of the stations. Mark the grade 100 feet on one of the posts, transfer the reading to each of the other posts and they are ready for the boards to be nailed on.

Putting Up Batter Boards.

It is best for three men to do the work of putting up batter boards—one man, a carpenter, with boards, hammer, saw and nails; the transit- or level-man, and the rod-man. The reading having been made and marked at *j*, put one nail in board *a*, fasten the board to post *j*, exactly upon the mark 100 feet, then the rod-man will place his rod upon the free end of the board at *k*, keeping the same reading on the rod which was marked upon *j*. He will move the rod and the board bodily up and down until the transit-man signals that the mark on the rod cuts the cross-hairs of the instrument. Then the carpenter will nail the board to both stakes, testing at *j* after the boards have been nailed to see that the level has not been changed during the nailing operation. Test in like manner, after nailing, board *b*, after it has been nailed to board *i* in the manner described.

Referring again to Fig. 7, it will be noted that there is a jog in the surface of the wall, shown by Fig. 9. It is also shown by Fig. 7 that the wall is to be 4 feet high, the top being marked 100 feet, the bottom 96 feet, and the jog being laid down as 97 feet 5 inches and 101 feet 5 inches respectively. As shown by Fig. 9, the pit must be dug to the depths noted above, thus making 17 inches difference in the levels of the two portions of the wall.

Reading the Leveling-Rod.

It should be thoroughly understood by the millwright that the reading on the leveling-rod which gives 100 feet on top of the batter board, when the transit is set in a certain position, may not give that level when the transit is placed in another position. The reading on the rod will vary, to give 100 feet, according to the level at which the transit happens to be set up. The reading on the leveling-rod, to give 100 feet on the batter board, may be 3 feet 6 inches, or 3 feet 8 inches, or it may be some other reading according to the hight at which the instrument happens to be leveled up. Therefore, bear well in mind that the rod reading changes every time the instrument is set in a different place, and that it is by no means necessary to always place the transit or level in the same spot when "throwing lines or levels."

But having found the distance on the rod which will give a grade of 100 feet elevation, it is only necessary to add 2 feet 6 inches more to the reading in order to give the 97 feet 6 inches reading on the rod, which will locate the 97-foot 6-inch level required. A very little practise in this direction will enable the millwright to use the leveling-rod with equal facility which he shows in using the measuring-rod, as described in a previous chapter. Machinery foundations may be located in the same manner described for foundations. The excavation can be made and tested with the leveling-rod in the same way.

It is well to set each step of the foundation work with the level or transit, and the top of each footing may, when finished, be checked by figuring out the proper reading, taking that reading on the rod placed upon the finished footing, and noting whether the cross-hair cuts the center of the target with the rod in place upon the finished work.

RUNNING LONG LEVELS.

A word of caution is necessary in running long level-lines with the cross-hair instruments or, in fact, with any other instruments. When a line of more than 100 feet in length must be accurately leveled, allowance must be made for the curvature of the earth which is taken as 8 inches to the mile but is somewhat modified by refraction, and it is well to allow 6.875 inches in practise to make up for the curving effect produced by refraction. When running levels for flowage of lands by streams or ponds, it will be found that the allowance to be made as above, for temperature, as well as refraction, is about .002 feet for 100 yards, .004 for 150 yards and .007 for 200 yards. The above dimensions are fractions of a foot, not feet and inches.

CURVATURE OF THE EARTH.

A convenient table which gives the allowances to be added for curvature and temperature combined will be found on page 163 of "Trautwine." One very sure method of running lines without the necessity of making curvature corrections is to place the leveling instrument exactly in the center between two stations and take readings both ways. This is the safest up to 300 feet. Put the instrument in the center 150 feet from each station, sight in one direction, then in the opposite one, and the result will be, provided the instrument is exactly level, that the two points are both of the same level by the instrument—that is, to the same curved line a certain distance higher than the instrument—but the two points will both be the same distance from the center of the earth, therefore the two points will be what we call "level" with each other.

CAUSES OF ERROR IN LEVELING.

The two sources of error in determining levels by means of the transit or the Y level, or the builder's level, are as follows: First, from a wrong setting of the instrument, its not being exactly level, and secondly, by an incorrect setting or reading of the leveling-rod. Guard against these two possible errors and use the instrument intelligently and there will be no trouble in obtaining accurate levels upon any job which the millwright or the engineer is likely to undertake.

Instructions for running levels with the Y level or the builder's level cannot be given in full here, on account of the limited space allowable for other than millwrighting itself, but the engineer or the millwright will have no trouble in proceeding with any work which may come to him provided he follows the above directions in a thinking manner. "I didn't think" is the excuse of the boy of today, as well as of the incompetent mechanic. A few brains are a good deal better than the best instruments ever turned out by the manufacturers. Put a few into the work and you will have little trouble with almost anything which you may wish to do.

CHAPTER V.

Foundations and the Carpenter's Level.

The next method of laying out foundations is the third—by the use of the carpenter's level.

This way is usually employed in connection with the "tape line and pole" method described in a following chapter. The writer is forced to acknowledge that this method of laying down elevations for both building and machine foundations is usually followed, and the fact is to be lamented, for great accuracy is impossible in this way, though with great care and much time fair results may be secured.

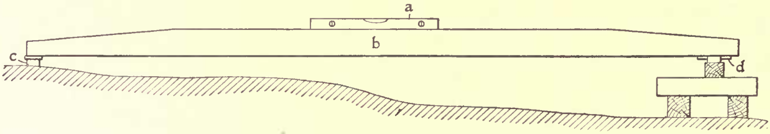

FIG. 10.—RUNNING LEVELS WITH THE STRAIGHT-EDGE AND CARPENTER'S LEVEL.

The most common method of obtaining a level between two points, is to span the two with a straight-edge, place the level on top, as shown by Fig. 10, and block up under one end of the straight-edge until the level bubble comes to rest in the center of its glass. In this fairly accurate but rather slow method, levels may be run from point to point as required by the work to be done, and whenever the line approaches within reaching distance of a corner of the proposed foundation, the straight-edge may be extended to that corner and a mark made upon a stake. This operation has to be repeated until stakes at all the corners have been marked.

In running levels in this manner, the level *a* should be adjusted to be fairly accurate, though there is a method, which will be described later, of working very accurately with a level which is pretty badly out of adjustment. But with a good level *a*, the straight-edge *b* is placed upon point *c*, which has been established at the level which is desired for the completed foundation. Then the outer end of the straight-edge is raised to approximate a level position, and an estimate is made of the amount of blocking required at *d* to reach the desired level. Then the straight-edge is shifted along, the end *c* is turned ahead and the operation repeated until the desired length of line has been leveled. A straight-edge should not be used with the same end ahead all the time for the reason that should one end be narrower or wider than the other end, the result would be a grade instead of a level. The best way, under all circumstances, is to reverse the straight-edge at each step and thus counteract any error which may be due to the cause mentioned.

Leveling a Line of Stakes.

A method of leveling a stake line is shown by Fig. 11, the first stake *a*, being used as a starting point, and either cut off to the required level, or a mark is made on the side to which the straight-edge is brought when starting as shown at *a*. Three men should attend to this operation, though two men can do it, but much more slowly. With a man at each end of the straight-edge *g*, and another man in charge of the level *h*, the work can be pushed ahead pretty fast with a considerable degree of accuracy. The supreme test is to level entirely around a foundation and come back to the starting point without coming out either too high or too low. It is the custom of the writer to continually check operations each time the straight-edge is advanced a length. For this purpose, the strip of board *i* is fastened slightly to post *a* by means of a couple of nails: By sighting back to the strip *i*, which is exactly as high as the combined width of level and

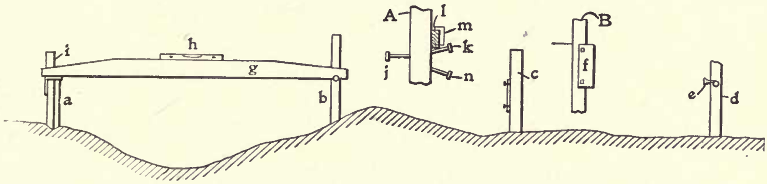

FIG. 11.—LEVELING A STAKE LINE.

straight-edge, it is easy to note whether the line is running level all right, or whether it is running up hill or down.

At post *b,* Fig. 11, the straight-edge after being leveled, is held tightly against the wood until it can be marked in some manner which permits of no error in the level. A very common way is to put in a nail as shown at *b,* also at *d* and *e.* The straight-edge is to bear upon the nail when the straight-edge is carried forward for another length of leveling. This is one of the most common causes of error. As shown by sketch *A,* the nail should be put in perfectly square with the post as at *j,* but this is not always the case. The common tendency of a man driving a nail is to incline the point downward a little, as at *k,* in which case, though the straight-edge *l* may have its hight correctly indicated as it lies on the nail *k,* there is a great chance for error when the straight-edge is passed ahead, for, should the stakes not lie quite in a straight line—and they seldom do—the straight-edge will, if the stake line swings to the left a little, be twisted away from the stake a little, and in order to take that position, it must climb out along the nail a little, and consequently it must move upward, to the despair of the level, as shown at *m,* where the straight-edge is shown in its new and raised position, throwing the line in error the distance between *l* and *m.*

Marking Posts.

At the corner post, *d,* there is also great trouble in placing the nails exactly level with each other in order that the straight-edge may lead off at right angles to its former course. Sometimes a single nail is placed in the corner of the post and both straight-edge leads use that angle nail in common. But this method is open to error also, particularly should the nail accidentally get hit by something and assume the position shown at *n,* sketch *A.*

It is much better to discard the nail method and use pieces of board at each post, as shown by sketch *B.* By this method, a bit of board from 12 to 24 inches long is brought up underneath the straight-edge and a nail previously started in the board is driven into the post. Another nail, driven down to within ¼ inch of its head, holds the bit of board securely and permits of no opportunity for error. The board is brought under the straight-edge in such a manner that the top edge of the board lies level. Fitting the board against the under side of the straight-edge forces the former to assume a level position, and in this position it is fastened securely. By properly locating the piece of board *f* on the corner post *d,* the straight-edge may be placed at will either ranging in the direction it has been traveling, or the straight-edge may be turned at right angles to the old line, in which case the straight-edge would rest edgewise upon the ledger board, as it may be called.

The Rudimentary Plane-Table.

Another method of leveling with the carpenter's level, which has been quite extensively employed by the writer (only in the lack of better instruments) for laying out foundation and excavation levels: A level platform is made up, say upon the sand heap *a,* and if possible a bit of plank is placed on the sand as at *b.* The board is accurately leveled by adjusting the sand or loam under its edges; then the level is pointed toward a post, say as at *d,* and a sight is carefully taken over the top of the level toward the post. An assistant places his rule crosswise on that post and raises or lowers the rule upon signal from the operator at the level. When the rule has finally been brought to coincide with the line of sight over the top of the level, a mark is made on the post as at *d,* where the line of sight cuts the post.

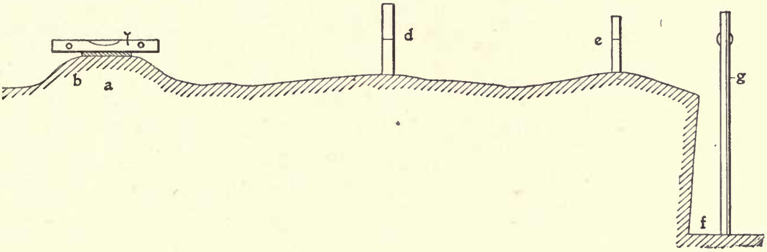

FIG. 12.—SIGHTING OVER THE CARPENTER'S LEVEL.

Post *e* is then treated in like manner, and all other points which are to be brought to the same level. Points above or below the level of the instrument may be determined by means of the leveling-rod already described, which is shown at *g,* the lower end of the rod being placed upon the grade *f,* the hight of which it is required to obtain. The reading of the rod will give directly the difference in hight between the grade *f* and the foundation line *d, e,* etc.

OPERATING A PLANE-TABLE.

A carpenter's level used as indicated by Fig. 12 forms a crude and very rudimentary plane-table, an instrument which, when roughly made on the job, is capable of doing a lot of fairly accurate work. A plane-table set up ready for operation is shown by Fig. 13. This is a very crude instrument, but the amount of fairly accurate work which can be done with it can not be com-

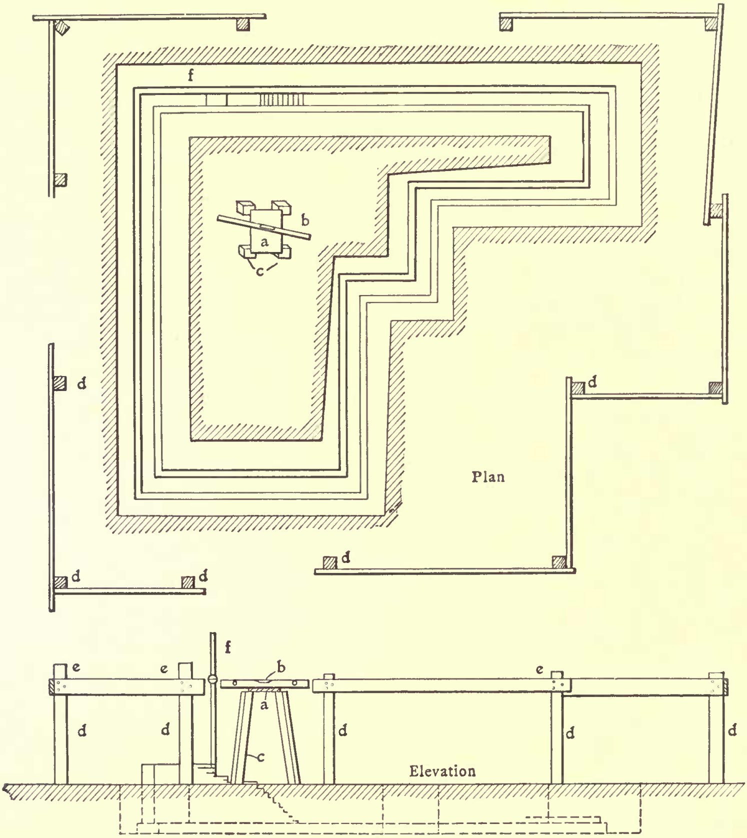

FIG. 13.—USING THE PLANE-TABLE AND A CARPENTER'S SPIRIT LEVEL.

prehended until one has tried it for himself. The table *a* is merely a well cleated board—a drafting board answers very well —set up out of the wind in a level position. As shown, the board is supported on four posts driven into the ground and sawed off level at the required hight of the foundation. When that level is not convenient, the plane-table may be set up at any convenient hight and the distance to the foundation line handled by the leveling-rod.

On the job shown by Fig. 13, the plane-table posts *c* were set into the ground nearly three feet to make sure that they did not move during subsequent operations which were to be somewhat complicated and tedious. Ample bracing, which is not shown in the drawing, was placed on the posts *c,* and four cleats were fastened to the top of the posts, after which the cleats were dressed off level to receive the plane-table board which was exposed to the weather as little as possible, being taken in immediately after any use was made of it.

SETTING BATTER BOARDS AND STAKES.

The level used was fitted with a sighting attachment, the construction of which will be described later. It will be noted in Fig. 13 that similar figures refer to the same points in both plan and elevation, and that the later view shows the posts in the foreground but not those in the distance. After the plane-table had been erected and thoroughly tested, the batter stakes *d, d, d,* etc., were set and batter boards *e, e, e* nailed on level with the top of the carpenter's level *b,* which was sighted to first one stake then another, until all the batter boards had been set.

It will be noted that the depth of excavation and the top of the footings, together with the hight of the finished foundation, are all directly controlled by the leveling-rod *f,* in the manner described in a preceding paragraph. A single setting of the plane-table support serves to control matters until the foundation is completed or the plane-table is covered up by the construction work. Then, if needed, the table may be set up again upon some of the completed work and the operations completed from the new location. It is best to so set up the plane-table that, if possible, all the foundation and machinery work can be done from that setting without having to move out of the way of material or construction, but in many instances this is not possible.

Accurate Sighting over a Level.

For the proper sighting of levels, greater accuracy can be obtained by rigging more or less elaborate attachments to the level. It is quite a skilful bit of work to sight over the top of a level at a rod 20 to 100 feet distant and determine within 1/32 of an inch where the mark should be made. Under some conditions, there is a refraction along the surface of the level which makes sighting very hard. A couple of strips of equal thickness fastened across the ends of the level, as shown by Fig. 14, serve to increase considerably the accuracy of the sighting operation, and a pair of rifle sights rigged on the level, according to Fig. 15, enable the millwright to work with still greater accuracy.

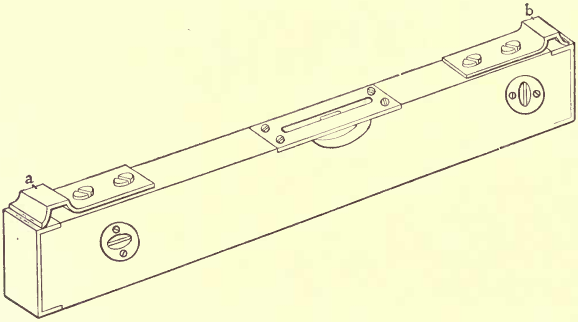

FIG. 14.—SIGHTING STRIPS ARRANGED ON LEVEL.

The strips *a* and *b* may be plain pieces of wood, nailed, screwed or glued to the level, or they may be metal clips, as shown by the engraving. These clips may be made quite strong and allowed to remain permanently on the level and adjusted to be true with the bottom of the level. Very few levels are found to be exactly true on top, and the clips allow adjustments to be made as necessary.

"Gun-Compass" Level Sights.

The level shown by Fig. 15 has been fitted with a couple of sights somewhat similar to those used on a rifle, or the sights are a cross between those of a rifle and of an old-fashioned compass used by the surveyors of 90 years ago. The writer has made several sets of level sights and usually makes them from a couple of screws and a copper cartridge ½ to ¾ inch in diameter. The arrangement is about as shown by Fig. 15, the head of the cartridge being cut off and soldered to a machine-screw, which in turn is fitted with a jamb nut for holding the sight in position after it once is adjusted.

A rim fire cartridge is well fitted for making these sights, about ⅜ or ½ inch of the closed end being mounted as shown, and a very small hole punched or drilled through the center of the head. This hole should be less than 1/32 inch in diameter and countersunk so as to leave only a very thin edge of metal to prevent reflections of light from the edge of the hole.

A piece of the body of the cartridge shell should be cut about the same length as piece *c*, and mounted in a similar manner as shown at *d*. A couple of very small holes should be drilled through the sides of the shell, and a bit of very fine wire from the G string of a violin should be stretched tight through the hole and soldered on the outside as shown. These sights being screwed into the brasswork of the level, they are ready for adjustment; should there be no brasswork, fit the sights to wood screws and tap them directly into the wood. It is, however, better to use either a brass mounted wooden level, or, better yet, use a cast-iron level and tap the sight screws directly into the iron.

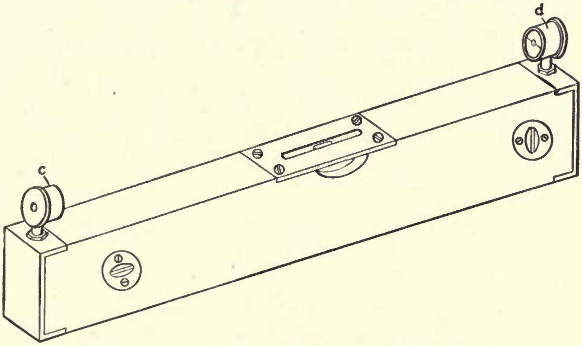

FIG. 15.—LEVEL ARRANGED WITH "GUN-COMPASS" SIGHTS.

Adjusting Sights on a Carpenter's Level.

To adjust the sights, first screw them into place and arrange the hole and the wire at the same distance from the bottom of the level as possible. Place the level on a straight-edge and set block *c* close in front and adjust the bolt *d* so that its top is exactly in line with the peep hole and the wire. Then arrange two stations from 50 to 100 feet apart if convenient; less will do, but the farther apart the stations (within seeing limits) the closer will be the adjustment of the sights. The stations should be level boards or blocks, flat and out of wind. Level station *a*, sight the level to *b*, after bringing the bubble of the level at *a* to the center of the vial; then adjust the hight of station *b* until bolt-head *d* comes just in line with the sights. Next, set the block *c* on station *a* with the level adjusted at *b*, and see if the sights come in line with the top of bolt-head *d*. If they are in line, the adjustment is correct. If the bolt head appears too high or too low, the sights—one of them—must be screwed in or out a bit and the testing repeated until the level will reverse stations and cut the top of bolt-head *d* every time. Test the adjustment of the level vial by reversing or changing the level end-for-end while carefully placed on two level spots. If the instrument reverses and shows the bubble in the same place, it may be called accurate. If it does not fill the requirement, the vial should be so adjusted that the level will reverse as above noted.

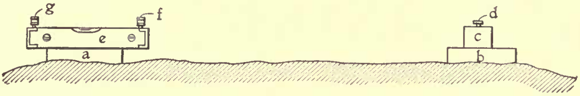

FIG. 16.—ADJUSTING SIGHTS ON A LEVEL.

A Home-Made Leveling Telescope.

The millwright who desires something better than the "gun-compass" sights illustrated by Fig. 15 may make a telescope which will do duty on the level when required and on a rifle at other times. The principle of the telescope is shown by Fig. 17, in which the level is fitted with a couple of lenses and a bit of shell carrying cross-hairs as shown at *d*, Fig. 15. In fact, the same shell and hair may be used, with the addition of a vertical hair, which would be an improvement to *d*, Fig. 15 and which can be added to that sight permanently.

In selecting the lenses, one should be of quite short focus, say three or four inches, while the other should be from 18 to 24 inches, accordingly as it is desired that the level be long or short. The length of the telescope will be a little more than the sum of the focal distances of the two lenses. The focus of a lens may be roughly ascertained by holding it in front of a window, but preferably as far back from the window as possible, and then holding a piece of white paper behind the lens, which is to be moved back and forth to and from the lens until the image of the window appears inverted on the paper as sharp or plain as it can be made by moving the paper as described. The distance between paper and lens will be the focal distance of the latter and is conveniently measured by holding the paper against the wall with one end of a rule or yard-stick, while the lens is slid along the measure until the image is as sharp as it can be made. Then read on the rule the distance from wall to lens which is the focal distance of the lens for objects at the distance of the window.

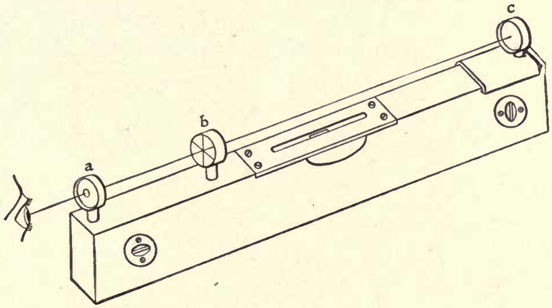

FIG. 17.—CARPENTER'S LEVEL ARRANGED WITH TELESCOPIC SIGHTS AND CROSS-HAIRS.

FOCAL DISTANCE OF LENSES.

The less the distance from lens to object, the greater will be the distance from wall to lens up to a certain limit. Beyond a certain distance, which may be termed the universal focus of a lens, there is little change in the distance of the image to focus it for any greater distance of the object. For the telescope here described, borrow the object-glass (the large one) from a small opera-glass, and for the other lens take an ordinary spectacle lens. This is not a scientific combination, with the plain object-glass and the compound eye-piece, but it answers the purpose.

Fit the opera-glass lens to a screw stud and fasten it to one end of the level, as shown at *a*, Fig. 17. The focal length of this lens having been measured as described, lay off that distance from *a* to *b*, and there locate the cross-hair shell *b*. It is well to verify the focal measurement of lens *a* by sliding *b* along the level until the cross-hairs appear as sharp and as clear as possible, when looking at them through lens *a*, in fact, until the cross-hairs are in focus with lens *a*. Locate the cross-hair shell *b* permanently at that point and make sure that it stands square with the lenses and that the latter—both of them—when fixed in place, are square with a line drawn through the center of each lens and the cross-hairs. Upon the accuracy of the lenses and cross-hairs in this particular depends the value of the telescope for leveling purposes. The opticians call the line shown by Fig. 17, along which the eye is shown to be looking, the "line of collimation," and unless both lenses, the cross-hairs and the eye are all accurately located upon this line, the instrument will not work accurately enough for leveling purposes.

Next, mount the spectacle lens *c* upon a sliding base and place it in position as shown. This lens does the focusing act, and it must be moved toward the cross-hairs when looking at a distance and away from the cross-hairs when the object looked at is close at hand. With the level thus arranged, no other cross-hairs are necessary, but it is better to place a bit of paper or thin metal pierced with a very small hole over the front side of lens *a*, in order that the eye may more quickly locate the center of the lens when taking a sight. Cross-hairs are not required at *c*—all that is necessary is to bring the cross-hairs at *b* fairly upon the object, and then rest assured that the telescope and the level to which it is attached is pointed squarely toward that object, provided that the three elements *a*, *b*, and *c* are all set upon the line of collimation, as described in a preceding paragraph.

Mounting Lenses in a Tube.

To put the telescope in a more convenient form, procure two pieces of pipe, brass is preferable, though well painted iron pipe may be used, and fit one end of each pipe with a screw-cap, as shown at *c* and *k*, Fig. 18. The pieces of pipe, *a* and *b*, should be fitted to slide snugly inside of one another. They should slide easily enough to be readily moved when focusing, yet they should be snug enough to stay in place when moved around and they should not slip when suspended by one end. The cap *j* is cut away as shown, the full size of the inside of the pipe it is screwed upon. Cap *c* has only a small hole drilled as shown, and countersunk inside, as shown at *d*.

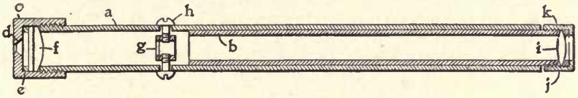

FIG. 18.—A "SPECTACLE-PIPE" TELESCOPE.

A "Spectacle-Pipe" Telescope.

The opera-glass lens is removed from its setting and placed inside the cap, as shown at *f*. If the lens is too large, grind it to size on a common grindstone, using plenty of water on the stone and taking care not to scratch the face of the lens. Grind the spectacle lens in a similar manner to fit in cap *j*, as shown at *i*. Place a bit of rubber (an elastic band will do) between the lens and the screw-cap as shown at *e*. This is to prevent the cracking of the lens when the cap is screwed up tight enough to hold the lens fast. Another bit of rubber should be placed in a similar manner in cap *j*, as shown at *k*.

Mounting and Adjusting Cross-Hairs—Focusing.

The cross-hair tube *g* is supported by four machine screws *h*, each tapped into the tube *g* and passing through holes in tube *a* which are larger than the screws, thus allowing some adjustment of *g* in various directions so as to bring that tube to coincide with the line of collimation. Focusing is affected by moving tube in or out, and the tube *a* is to be attached to the level and adjusted from two stations, as described for the "gun-compass" sights. This telescope will enable a man to readily discover a nail-head at a distance of 300 to 400 feet. It gives an inverted image, but many high-grade transits do that, and it is no objection after one gets used to it. A telescope of this kind is known as a "night glass," and it gives a better image in the dark or semi-darkness because there are a less number of lenses than when an image right side up is given. A set of lenses for inverting the image again are required for making the instrument show things right side up. This set is placed between *f* and *i* and merely inverts the image again and incidentally absorbs some of the light, hence the plainer the image as the number of lenses are decreased.

As a Rifle Telescope.

The telescope as shown by Fig. 18 is an excellent rifle telescope and needs nothing save being fastened to the gun in the ordinary manner, and, perhaps, the placing of *f* and *g* in the inner tube so that the focusing may be done from the front end instead of from the object end as now is the case.

By the Use of Tape Line and Pole.

The method of laying out building foundations without any other instrument than a chalk line and a ten-foot pole, applies, more properly speaking, to the fixing of the several lines and distances required for the location of foundations, piers and machines. Really, the leveling and the laying out of wall lines, etc., are two separate and distinct operations, the lines and measurements require to be done before the levels can be determined.

But the problem is, how to lay off right angles and mark them without the use of the transit, the builder's level, or even the telescope on the carpenter's level. And by the way, the telescope described and attached to that instrument will enable the millwright to work with the station-rod nearly as well as he can with the transit, the only difference being that with the transit the rod could be observed and worked at any hight, while with the telescope on the level the station-rod must be brought into the line of sight or collimation, as the telescope cannot be inclined up or down to pick up a sight on the station-rod.

"Squaring" a Line.

The time-honored method of "squaring" a line is by the "6, 8 and 10" method, as shown by Fig. 19, where it is desired to "square" a line from point *a* on the line *a b*. The first step is to place a pin through the line at *c*, measure off 6 feet to *d*, and insert another pin. Then stretch the new line as nearly at right angles as can be determined by the eye, measure off 8 feet, *f, c,* and insert another pin. Then set up the batter boards *h, h,* or place a couple of trestles in position to receive the pole *g e,* which must lie just under the lines, as close as possible without touching them. Next, adjust line *e f,* keeping it on the pin at *f,* and moving *e* until there is just 10 feet between *e* and *g.* This completes the triangle 6, 8 and 10, which, according to geometry, will require a right angle at *f,* thereby "squaring" line *e f.* It is necessary that a good deal of care be taken to keep the lines exactly fair with the pins and the marks on the pole. This attended to, the squaring will be fairly accurate.

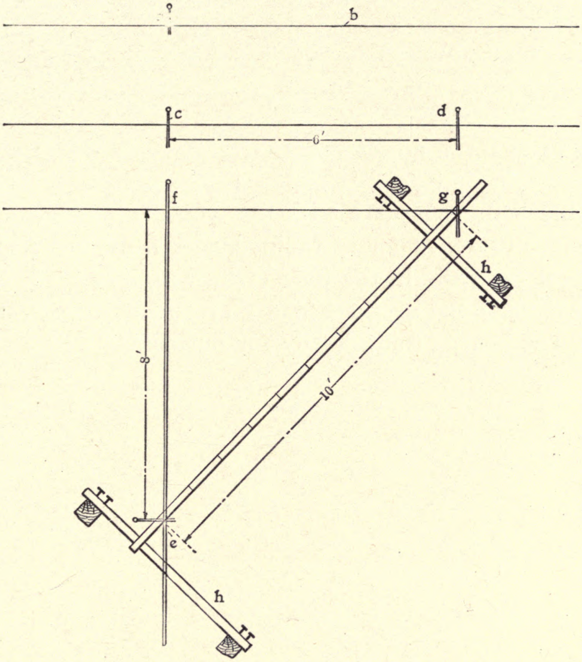

FIG. 19.—THE "6, 8 AND 10" METHOD OF "SQUARING A LINE."

New Method of "Squaring a Line"—The Radius Board.

Another method, which to the writer is entirely new and has never been used by any other person, is as follows: Prepare a "radius board," as shown by Fig. 20, almost any piece of board answering the purpose. The board can be made of any length, and the writer usually takes a 12 foot board, 7/8 inch thick by 10 inches wide, and has a line drawn from *b* to *c,* through the center of the board. Next, a strip of wood *e,* a few inches wide, has two nails driven through it, as shown at *f* and *g,* taking pains to keep the nails as square with the wood as possible. A hole is next made in the center of radius board *a,* as shown at *d,* and with one of the nails in the hole (which may be made by driving in that nail) the marks *b* and *c* are made, using strip *e* as a tram. The board is now ready for business.

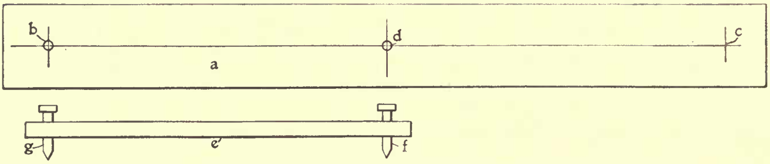

FIG. 20.—RADIUS BOARD FOR LAYING OFF A RIGHT ANGLE.

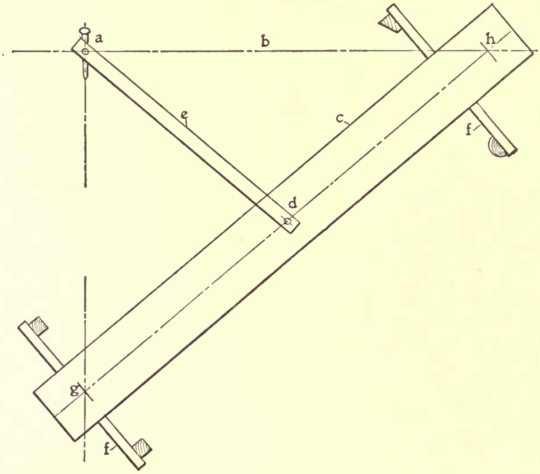

FIG. 21.—"SQUARING A LINE" WITH THE RADIUS BOARD.

Place the radius board on the ground, as shown by Fig. 21, with the strip *e* in position with one nail in the center of board *c,* the other nail at the point the new line is to start from. The above disposition of the board is merely to locate the trestles or batters *f f,* which, once in position, the board *a* is placed upon them as shown and the nails in *e* adjusted as shown, one in the hole in the middle of the radius board, the other nail at point *a*, where the new line is to start. Keep nail *a* in position, and move one end of the board until the mark *h* lies fair under the line *b h*.

It makes no difference whereabouts in line *b* point *h* is located, but the writer tries to keep points *g* and *h* about the same distance from point *a*, in order that the measurements may be more nearly equal as will be described in the next paragraph. Once get point *h* fairly on line *b*, with nail just at point *a*, there remains nothing more to do except to draw the new line from *a* through point *g*, and the lines *a b* and *a g* are at right angles to each other, or "square" as the old millwrights call it.

PRINCIPLE OF THE RADIUS BOARD.

The principle involved in this manner of erecting a perpendicular is based upon that proposition in geometry which demonstrates that, "An angle in a semi-circle is always a right angle."

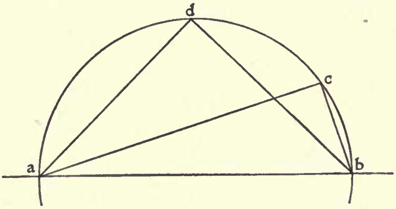

FIG. 22.—PRINCIPLE OF THE RADIUS BOARD.

This is shown by Fig. 22, in which *a b c* form a semi-circle, and the lines *a d* and *b d* form a square corner at *d;* and lines *a c* and *b c* likewise form another square corner at *c*. This is true of any and all lines that can be drawn to any point in the circumference, from the points *a* and *b*.

LEVELING A LINE.

In some parts of the country, masons have a method of leveling quite closely to a line stretched between two points. For short spans, as shown by Fig. 23, the work may be made fairly accurate, but it is more work than the results are worth, for they are always open to criticism. If a man is bound to attempt this kind of leveling, let him bear in mind that to obtain results even half-way accurate, the level *must* be placed in the middle of the line, equi-distant from its points of suspension. This is plainly shown at *a b* and *c,* where the line *a b* is tightly stretched between its supporting nails and the level *c* is set up exactly half way between the line supporting posts. Should the level have been placed at *e,* it will be noted that the line, level at the instrument, would have to hang from *d* instead of *a* in order to be found level at *e.*

On longer lines, the matter is still more forcibly apparent. Let Fig. 24 represent lines stretched 100 feet or more between the shed and the telegraph pole. The dotted line *f g* is straight and level. Should it be desirable to level this line for the purpose of ascertaining the vertical hight of points *f* and *g,* it will be noted that the line, even when very tightly stretched, will hang at *k,* where the level is in evidence.

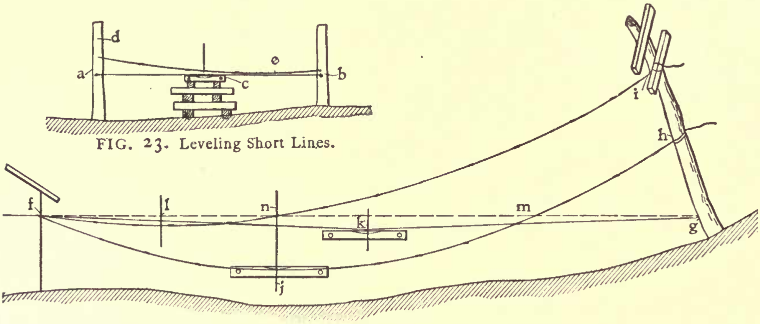

FIG. 23.—LEVELING SHORT LINES. FIG. 24.—LEVELING LONG LINES.

But should the line have been stretched between *f* and *h,* it stands to reason that the line cannot be level—at least the points of support cannot be level—even though the level at *j* is parallel with the line, which for exactness in this instance is placed beside the line so that the two upper corners of the level come fair with the line at either end of the level. Although the points *f* and *h* are by no means found to be level, it is demonstrated that the points *f* and *m* are in the same level line, also that the points *f* and *n* are also level when the level is placed at *l,* and that the distance *f l* is equal to *l n,* and that distance *f j* is also equal to distance *j m*. That points *j* and *n* came vertically over each other is a coincidence. It has nothing to do with the leveling problem.

Thus it will be seen from the above that the two points from which a line is suspended can not be even approximately leveled by placing a carpenter's level below the catenary of the line at its lowest point, unless the level is placed exactly in the middle of the span.

CHAPTER VI.

ERECTING BUILDING AND MACHINERY FOUNDATIONS.

It frequently falls to the lot of the millwright to determine what foundations are needed to sustain certain buildings and machines. At other times, plans are sent out by architects or machine builders in which the sections of foundations are laid down ready for execution by the mason or bricklayer. The writer has observed many instances where the foundations as laid down in the drawings sent out called for a much more expensive construction than was necessary. Particularly is this true with plans sent out by machine builders where they include the drawings for the buildings with those for the setting of their machines.

It is not my intention to criticize the drawings sent out by any engineering concern or any machinery builder, but such plans are usually to a certain extent "ready-made" or stock plans, and are sent out for construction in any soils, ranging from the rudimentary sandstones of Idaho and Minnesota to the bogs of Buffalo, where the ground shakes for 100 feet in every direction when a hammer drops upon a pile. Drawings intended for such universal use can only be made to show foundations substantial enough for the bogs and the poor soil. These foundations will prove wasteful if executed in soils which will carry three and four tons to the square foot. The man who makes stock drawings has no choice. He must put in foundation enough for the bog and let the sand man waste his good money in useless concrete work and masonry.

WASTEFUL FOUNDATION DRAWINGS.

It is often the millwright who must discriminate between the demands of common sense and the wasteful drawings furnished with the machines which he has to erect. Where drawings are made as they should be, for the particular case in hand, there is no excuse for putting in useless tons of valuable cement or thousands of good bricks. Neither should there be constructed light cinder concrete foundations upon which heavy gearing is to transmit power. Heavy foundations are needed where heavy gear teeth are meshing continually under heavy loads, and building foundations adjacent to such machinery foundations also need to be heavily constructed of good material.

It is, then, up to the millwright to prepare himself to discover when drawings call for a waste of concrete and brick and mortar, and to detect weak places in machinery foundations should such weaknesses exist. To do this, the millwright must know something of the carrying power of the different soils, and he should be able to figure the strains imparted to foundations by moving machinery.

THE LOAD-CARRYING POWER OF DIFFERENT SOILS.

The safe load which may be placed upon any foundation depends upon the carrying power of the soil and the area of the foundation footing. It is not the purpose of this book to enter into a discussion of the carrying power of the various kinds of soil met with, therefore nothing will be given in that direction save the following table which will serve as a guide to the millwright when he must determine whether or not the plans furnished call for an excessively heavy foundation, or whether the mass of material shown underneath some heavy machine is insufficient for the particular soil met with during the operations at hand.

TABLE I.—BEARING POWER OF SOILS.

By Prof. Ira C. Baker, University of Illinois.

Kind of Material.	Tons. sq. Ft.	
	Min.	Max.
Rock—the hardest—in thick layers, in native bed...	200	..
Rock equal to best ashlar masonry................	25	30
Rock equal to best brick masonry.................	15	20
Rock equal to poor brick masonry.................	5	10
Clay on thick beds (always dry)..................	4	6
Clay on thick beds (moderately dry)..............	2	4
Clay, soft.......................................	1	2
Gravel and coarse sand, well cemented............	8	10
Sand, compact and well cemented..................	4	6
Sand, clean, dry.................................	2	4
Quicksand, alluvial soils, etc...................	0.5	1

SHAPE OF CONCRETE FOUNDATIONS.

Drawings sent out with machines frequently call for concrete foundations with slanting or taper sides which call for very expensive form construction. An example of this kind is shown by Fig. 25, where a small square foundation is made with taper sides which in turn are surmounted by a 45-degree bevel as shown at *a,* but which the millwright is warranted in changing to a form which is exactly as strong and which requires less than one-tenth the cost of form construction. This foundation is 18 feet square on top at *a,* and is to carry a load of 18 tons in sand, rather loose, as determined by driving a bar down through it. To the millwright, the sand seems safe to be allotted not over two tons to the square foot of surface.

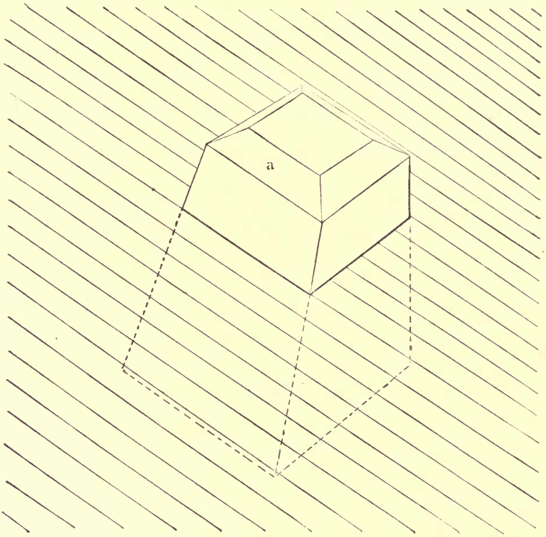

FIG. 25.—COSTLY TAPER SIDE FOUNDATION.

The foundation, as shown by the drawing, proves to be 4 feet high, 30 inches square at the base, and, as stated, 12x12 inches at the top. To make a form for this shape requires a form of construction similar to that shown by Fig. 26, the plan and section views showing plainly the construction which involves a considerable amount of labor and tight, close-fitting matched boards, together with four pieces of scantling and a piece at the top which must be chamfered on both edges.

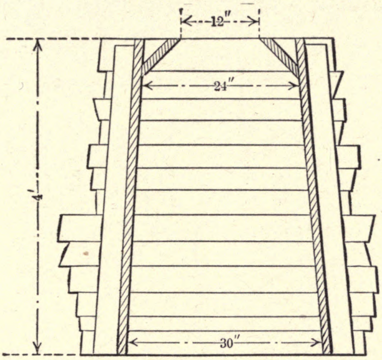

Section through A-B

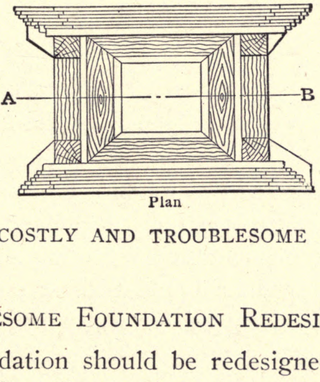

Plan

FIG. 26.—A COSTLY AND TROUBLESOME FORM.

A TROUBLESOME FOUNDATION REDESIGNED.

This pier or foundation should be redesigned, as shown by Fig. 27, the taper sides disappearing altogether and the entire foundation being formed of three rectangular blocks, built one at a time on top of each other, one square form being rammed full of cement and then another and smaller form placed on top of the filled one and rammed in its turn. In the redesigned foundation, the cube *b* is made tall enough to reach to the floor line, 16 inches, and for the sake of good looks—not for strength—it is made of the same length and width. The remainder of the foundation, being below the floor line, may be made any size, but it should be just large enough and no larger, than is called for to carry the load placed upon it.

The object of making a foundation larger at the bottom is to secure bearing enough on the earth to safely carry the load to be put upon it. As it has been decided that the soil met with will safely take care of two tons to the square foot, there will be required 18÷2=9 square feet of surface at the bottom of the foundation. This means that the footing should be 3 feet square, whereas the taper side foundation is only 30 inches square, and was evidently designed for soil which would carry $2\frac{1}{2}$ tons to the square foot.

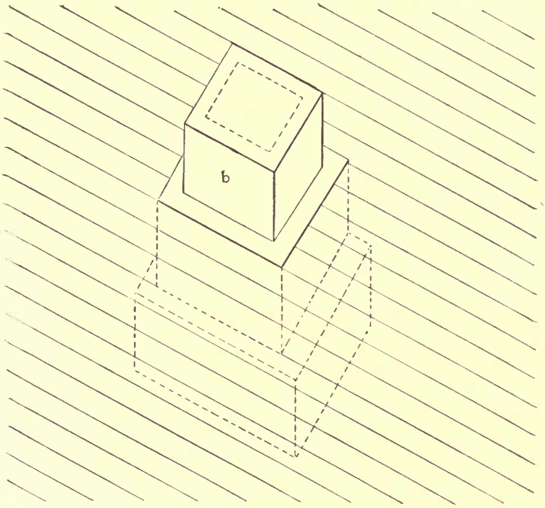

FIG. 27.—TAPER SIDE FOUNDATION REDESIGNED.

Testing Carrying Power of Soils.

If there is any doubt in the mind of the millwright as to the load any soil can safely carry, let him place a 12x12-inch bearing on the soil in question and load the bearing with stones, brick, sand or anything weighty until the little foundation fails by squeezing its way into the ground. The millwright can then assume such a factor of safety as he sees fit, and determine the safe carrying capacity of the soil under discussion.

CHEAPLY CONSTRUCTED FORM.

But the redesigned foundation will be given a bearing of 9 square feet upon the sand, and the intermediate section will be made so as to give equal steps back from the 36 to 16 inches. As there are 10 inches on a side for the top block to fall back, the steps must be 5 inches each. Fig. 28 shows the simple and cheap construction possible when the form is made to fit the new pier.

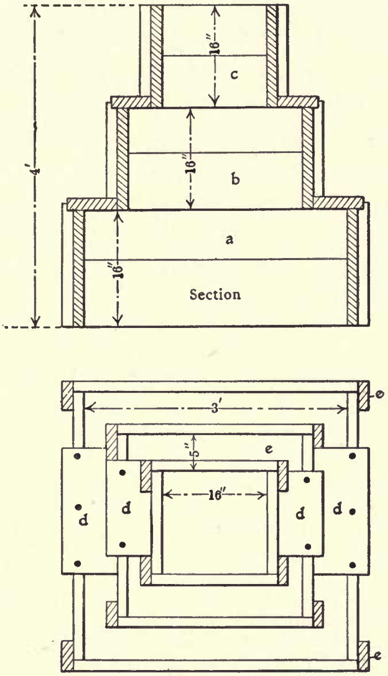

FIG. 28.—CHEAP FORM FOR REDESIGNED PIER

In fact, the form consists merely of three square boxes, open top and bottom, being simply nailed up square and the cleats *e e* nailed on to hold together the two 8-inch boards of which each side is composed.

The box *a* is first placed in position and filled with concrete, level full, then box *b* is laid on top, and two bits of board *d d* nailed on to keep box *b* in place until filled. After this box is rammed full of concrete, the third box *c* is put in position, cleated at *d d* and rammed. With this form of construction there is no tedious under-ramming as is necessary with the form shown by Fig. 26, where a surface 30x30 inches must be rammed through an opening 12x12 inches.

VIGILANCE NECESSARY BY THE MILLWRIGHT.

This example is given not as a guide toward the making of concrete forms and the changing of drawings furnished, but for the purpose of showing the millwright that it is necescsary for him to be alive to every little point in the construction of a mill, and, being able to figure the size of any foundation, he can check the work of the man who made the foundation drawings, especially when these are of the stock variety, thereby occasionally saving a few hundred dollars worth of cement for his employer, and also, perhaps, preventing the overloading of some bit of foundation which may have been overlooked, or which must, perhaps, stand on ground not quite as solid as estimated when the foundation drawings were made up.

The old adage about "eternal vigilance being the price of liberty" applies particularly well to the millwright and his responsibility.

CONCRETE CONSTRUCTION.

It is not the business of the millwright, or of this book, to design or teach the design of cement construction, yet it is necessary for the millwright to understand the principles of that form of construction, as he must also understand the principles of wood, masonry and steel structural work. Plain concrete construction is comparatively simple, and, as in brick or stone work, it consists of placing the material in such position that it will sustain its own weight and the weight which may be placed upon it. In concrete work, the load is carried almost entirely by the quality of concrete, which is measured by its resistance to crushing.

The transverse strength of concrete should not be depended upon to any extent, neither should its tensile strength. Bear in mind in all concrete work, as in masonry, that in unsupported spans the material must be so placed that it is held in place by its own weight and the weight of any load which may be above it. This limits the use of concrete to the arch, the pillar and the wall. The beam cannot be used without sacrificing economy of construction in the placing of enormous beams which carry their load through, being to all intents and purposes immense solid arches.

REINFORCED CONCRETE.

When concrete must be used for beams, resource must be had to reinforcing the concrete with steel sufficient to carry the tensile strains. All beams are in compression on top and in tension underneath, hence the steel and the concrete are so disposed as to each carry their own part of the load. The good designer of reinforced concrete will reduce the cost of both kinds of material to the lowest point by so designing his work that no bit of concrete is in tension, and no piece of steel has any compressive load to carry. The millwright will be far toward possessing a working knowledge of concrete and reinforced concrete construction when he has fixed the compression and tension carrying business firmly in his understanding.

While tests of concrete show a strength in tension of 2,000 to 4,000 pounds to the square inch, this property of concrete should, as stated, be neglected entirely, though according to Professor Hatt the safe working strain of concrete in tension is 300 pounds to the square inch. Concrete in shear will stand 50 to 65 pounds to the square inch, and in compression it ranges from 2,000 to 4,000 pounds to the square inch, well made and mixed 1:2:4, one month old. This would give a working value of 500 to 800 pounds to the square inch, using a factor of safety of 4. Cinder concrete is not as strong. Mixed 1:2:3, it stands only about 1,000 pounds to the square inch and should not be loaded to more than 250 pounds, and less than this when the load is vibratory, as with running machinery.

The coefficient of expansion of concrete is 0.0000055 its length for each degree Fahr. As wrought iron is 0.0000068, and steel is 0.0000067, there never will be any trouble from different expansion of reinforced concrete, as the expansion of both substances is almost identical. The adhesion of concrete to steel is taken at 300 pounds to the square inch. In the design of beams which are to be reinforced, the designer will do well to limit the compression strains to 600 pounds to the square inch, the diagonal tension to 60 pounds and the average compression 300 pounds. The steel in any beam or other reinforced work should not carry a tension strain greater than 20,000 pounds to the square inch, and the shear should not be more than 12,000 pounds. The compression should be limited to 10,000 pounds in round bars which should not be used larger than 1 inch in diameter, and unless hooked around some object at the end with a 6-inch hook, bars should have from 30 to 50 diameters of length to develop their grip; in other words, to prevent their load from slipping or pulling them away from their union with the concrete.

Placing and Removing Forms.

When forms are placed and removed in work under his supervision, the millwright will see that the forms are so made and placed that they will admit of no settling whatever, which would break the adhesion between the cement and the steel before the setting of the former. In removing the forms from work, ten days should elapse before they are removed from the sides and top of beams, and no less than four weeks from the bottom of beams and girders. The shoring should be allowed to remain that length of time, and in very long beams and in slabs the shoring should be kept in position for six weeks after the work was poured.

Testing Cement and Aggregates.

Although cement working, like electrical working, is a specialty by itself and is usually performed by specialists trained in the crafts in question, the millwright is necessarily such a "jack of all trades" that he must know something of each, and he must in any case, as he has to supervise the construction of considerable concrete work, be informed of the methods of testing the materials used in concrete work. It is usual to speak of concrete as being composed of "cement, sand and aggregates," while other workers include the sand with the stone or gravel and say, "cement and aggregate," "aggregate" meaning, usually, broken rock or gravel.

Cement may be subjected to several physical tests which will tell the millwright whether that particular cement is or is not fit for use in concrete construction. The first test, according to the requirements of the American Society of Civil Engineers, is that of fineness.

TEST FOR FINENESS.

The cement having been properly sampled, being taken from a barrel through a hole in the middle of one of the staves by means of an augur or a testing spoon; or, if in bags, the sample is to be taken from surface to center, and sifted through a sieve of 20 meshes to the linear inch to break up the lumps and remove foreign material, a quantity of the cement is weighed and placed in a sieve having 200 meshes to the linear inch, and after having been dried at 212 degrees Fahr., if necessary, the sifting is accomplished by placing a pan under the sieve, a cover on top, and then shaking the sieve, patting it at the rate of 200 times a minute with one hand to help pass the cement through the very fine wire cloth of the sieve. The shaking is to be continued until not more than 1 per cent. passes through after one minute of continuous shaking. Some large shot added to the cement in the screen will hasten the screening of the quantity which is usually taken at 50 or 100 grams (1.76 or 3.52 ounces).

The cement which does not pass the 200 sieve is weighed and not more than 25 per cent. of the weight of the cement should thus be rejected by the No. 200 sieve. The residue left on the No. 200 sieve should be placed on the No. 100 sieve and the residue there should not be more than 8 per cent. of the total weight of the sample. Cements which leave more than 25 per cent. of No. 200, and more than 8 per cent. on No. 100 sieves, should be rejected. The above applies to portland cement. Natural cement should be rejected if more than 30 and 10 per cent. respectively, fail to pass the No. 200 and the No. 100 sieves, but as natural cement is much weaker than portland cement, it is not much used by engineers at present.

TESTS FOR CONSTANCY OF VOLUME.

The millwright will not be able to make tests for tensile strength, but he can make those for constancy of volume, and for that purpose he will make up little pats of cement, three inches in diameter and half an inch thick in the middle, tapering down to a thin edge all around as shown by Fig. 29. These pats may best be made by mixing the cement and placing it on pieces of glass, patting it down to the shape described above.

These pats are kept in moist air for 24 hours, being placed in a box containing a wet sponge or wet paper, and the box covered with a wet cloth which is to be kept wet. The pats should all be firm and hard at the end of that time and show no signs of curling up from the glass, or of checking or cracking, or of crumbling. Three pats should be made as above; then, after the 24 hours in moist air, one pat should be laid aside in air, another immersed in water at about 70 degrees, and the condition of both pats observed daily for 28 days.

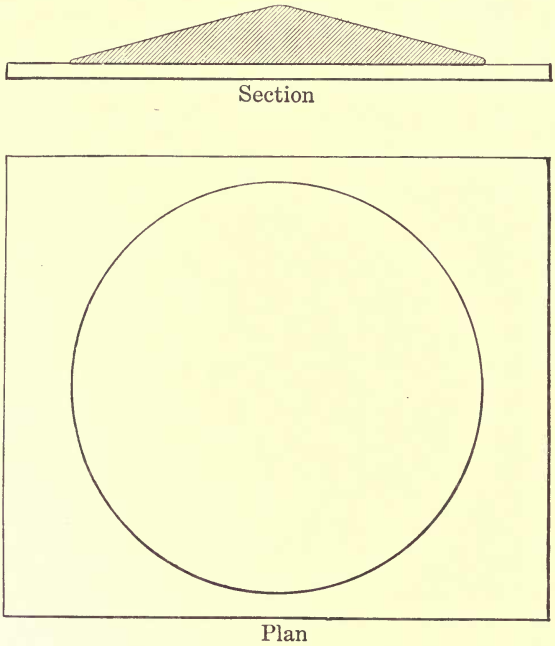

FIG. 29.—CEMENT PAT FOR CONSTANCY OF VOLUME TEST.

The Accelerated Test for Cement.

But it requires too much time to make tests of this kind, therefore there has been devised what is known as the accelerated test, whereby the condition of the cement may be rapidly determined if it passes satisfactorily the 24-hour test in moist air. Two of the three pats made for the tests have been disposed of. The third pat is for the accelerated test, and that pat is placed in steam escaping from boiling water for five hours, being placed just above the boiling water and loosely covered for the time mentioned.

If the cement passes the boiling or accelerating test, it may, in addition to having passed the fineness test, be accepted, but if it fails to pass the boiling test, it should be held to be tested for tensile strength, a portion of the cement being sent to a laboratory for that purpose, where it is made up into briquettes having a middle section of one square inch. These briquettes are made and placed in moist air the same as the pats, then they are put into air and into water in the manner also described for pats. Three of these are also made, and one is broken at the end of 24 hours, the other after 7 days, and the other is kept for 28 days before it is pulled apart in a testing machine.

TENSILE STRENGTH TESTS.

In addition to the three briquettes above described, three more briquettes are made at the same time, but consisting of one part cement, three parts sand, and broken at the ends of the times specified for the neat cement briquettes. The result of the breaking tests should be as follows:

Age	Strength, lbs.
PORTLAND, NEAT CEMENT	
24 hours in moist air	150-200
7 days (1 day in moist air, 6 days in water)	450-550
28 days (1 day in moist air, 27 days in water)	550-650
ONE PART CEMENT, THREE PARTS SAND.	
7 days (1 day in moist air, 6 days in water)	150-200
28 days (1 day in moist air, 27 days in water)	200-300
NATURAL, NEAT CEMENT.	
24 hours in moist air	50-100
7 days (1 day in moist air, 6 days in water)	100-200
28 days (1 day in moist air, 27 days in water)	200-300
ONE PART CEMENT, THREE PARTS SAND.	
7 days (1 day in moist air, 6 days in water)	25- 75
28 days (1 day in moist air, 27 days in water)	75-150

Cements which do not pass the fineness and the pat tests, should be treated as above, and accepted if they pass the 28-day tests. Some cements fail under the 24-hour tests and even the 7-day tests, but pass the 28-day tests successfully. These are evidently slow setting cements, showing that it is not just to pass snap judgment upon cements of any kind.

There are other tests, those of the time of setting and the weight to the cubic feet, or specific gravity, which shall be as follows, to have the cement accepted:

Specific Gravity and Time of Setting.

Portland Cement.—Dried at 212; sp.gr. 3.10; time of set, initial, in not less than 30 minutes, but must develop hard set in not less than one hour nor more than ten hours.

Natural Cement.—Dried at 212; sp.gr. 2.8; time of set, initial, in not less than ten minutes and hard set in not less than thirty minutes nor more than three hours.

The specific gravity may be ascertained by weighing with the same scale used in determining the fineness of the cement. If the millwright finds that he is to have much to do with concrete, it will pay him to procure a little scale for cement weighing and testing. The necessary screens, together with the scale, can be purchased from dealers in cement testing apparatus. If only an isolated test or so has to be made, the millwright can possibly get the necessary weighing done by an apothecary who will be fitted with the necessary scales for fine weighing.

Sand and Cement Testing Screens.

In any case, the millwright should have a few screens for testing not only cement but sand as well. Nos. 100 and 200 mesh are used as noted above for cement, and standard sand is that which is caught on No. 30 mesh after passing through No. 20. The millwright should have these screens also, and if there is any likelihood of having to do with cement block construction and sand-lime factory construction and operation, then there will be needed screens Nos. 2, 4, 8, 12, 16, 20, 40, 60, 80, 100, 120 and 150. These, together with those mentioned for sand and for cement, will make a nest of 16 sieves, ranging from 2 to 200 meshes to the linear inch. These, with cover and pan, will cost about $25. The scale will cost about $10 more.

Home-Made Testing Sieves.

If preferred, pieces of wire cloth of the grades mentioned, 8x8 inches may be purchased for about $10, and the millwright may have the tin rims made up by the local plumber. This course was followed by the writer, who has for his own use a set of sieves of the numbers mentioned which were made up at home at a cost of (excepting time) about $14.

Testing the Specific Gravity.

It will be very easy for the millwright, perhaps with the aid of a friendly druggist, to ascertain the specific gravity of cement. To do so, weigh out a convenient quantity of cement, first having dried it at 212 as elsewhere directed. Then procure a bottle which will hold about three times the quantity of the cement weighed out. Fill the bottle with water as close to 60 degrees temperature as possible, and procure another vessel, either a bottle or a pitcher, from which the water may be easily poured into the bottle. Carefully weigh the second vessel and mark its weight for future reference.

If the millwright have at his command a very fine scale weighing down to 1/100 of an ounce, then he may make the test with a single ounce of cement, but if coarser scales must be used, then the quantity of cement should be increased. That is what is meant by a "convenient quantity" of cement which was to be weighed out. Having carefully weighed the second vessel, fill the first one—the bottle with a small neck—even full of water as described, then pour a portion of the water, say one half, into the second vessel, taking care not to lose a drop of the water in any of the operations.

Next, introduce the weighed quantity of cement through the narrow neck of the half filled bottle, and shake enough to get all the cement fully wet and to make sure that no air bubbles remain under water. Fill the bottle again, with water from the second vessel, taking great care to fill the bottle even full without losing a single drop of the water. There will be some water left in the second vessel, which must be weighed again with that water in it and the weight of the water found by deducting the weight of the empty vessel from the weight of the vessel and the left-over water. The result will be the weight of a mass of water having the same bulk as the known quantity of cement placed in the bottle. Divide the weight of the water displaced from the bottle by the cement, and the quotient will be the specific gravity. Multiply the weight of a cubic foot of water (62.5 lbs.) by the specific gravity and the product will be the weight of the cement to the cubic foot.

Before placing the cement in the bottle with the water, should the millwright carefully measure the space occupied by the cement, by packing it carefully into a box or cylinder of known dimensions, then, if the bulk measurement of the displaced water, be divided by the bulk measurement of the cement, the result will be the percentage of solid matter in the cement. Substract the percentage thus found from 100 and the result will be the percentage of voids in the cement, which well shaken down into the measuring vessel, will range from 30 to 50 per cent.

The Use of Oil for Gravity Determination.

The density test for cement described above, although accurate enough for the rough work required by the millwright, is not correct, owing to the possibility that some of the lime present may be hydrated when in contact with the water. To make this test correct enough for scientific purposes, kerosene oil should be used instead of water for filling the bottle described above. The work is the same except that to obtain the weight to the cubic foot the specific gravity must be multiplied by the weight of a cubic foot of kerosene oil. That substance having a specific gravity of about .7 to .8, it is necessary to calculate the weights to the cubic foot accordingly.

For instance: at a specific gravity of .7, the weight to the cubic foot of the oil would be .7x62.5=43.75 pounds to the cubic foot and for other densities in proportion. It is recommended that naphtha having a sp.gr. of .729 be used for this test. When such a light oil is used, care must be taken to prevent error through a portion of the oil volatizing between the times it is weighed. A very interesting exhibit can be made of the cement in the naphtha if the mixture be placed in a tall thin bottle or tube and well shaken, then allowed to settle. It will be found that the cement is graded in the tube, the heavier and coarser portions going to the bottom, the finer particles next, and so on to the top of the mixture, where, if there be a deposit of yellow substance, it indicates the presence of under-burned material in the cement. This test applies more particularly to portland cement.

Broken Stone and Sand.

In the making of concrete, after having proved that the cement will pass inspection, the millwright should see that no decayed or very soft rock is used in crushing the aggregate. The strength of concrete is only that of the rock of which it is made, and if rotten shale be used, either in the form of broken stone or as gravel, a weak concrete can be the only result.

If there is a chance that the concrete will be exposed to fire, limestone rock should be avoided, and he also should avoid feldspar for the same reasons. See that the rock breaks square and clean and is not crushed so that it crumbles under the fingers. Some rock, particularly granite, is apt to break in this manner and the concrete is weakened thereby.

Use Well Screened Rock and Sand.

Although sand and rock are to be used in concrete, it is not well to allow them to come together before they arrive at the mixing table or machine. If mixing be allowed in the bin, some portions of the concrete will have more fines than other portions and it is impossible to judge the proportions met with in different portions of the same bin, hence it is impossible to make uniform concrete from material mixed in the bins.

Proportioning Rock and Sand.

It should be the business of the millwright to see that the proportions of rock, sand and cement used are fitted to the peculiarities of the material to be at hand. Let him make some experiments with the material actually being used on the work. Construct a square box, 12 inches inside measurement, with tight bottom but no top. Weigh this box carefully and fill it with the broken rock, shaken down as closely as possible, and weigh accurately. Shake out the broken rock and mix with it a certain proportion of smaller broken stone or gravel. Add a small quantity at a time and replace in the cubical box. Note the amount of fine stone which may be added without increasing the volume of the broken stone.

Having determined the above point, weigh the contents of the box and note the increase in weight to the cubic foot caused by filling the voids with smaller pieces of broken stone. Next, repeat the operations, this time using sand which is mixed with the coarse and fine rock and replaced in the cubical box. When the point is arrived at which gives the heaviest weight to the foot, the mixture then contained in the box is the one which the millwright should seek to maintain continually.

PROPORTIONS OF CEMENT AND WATER.

The desired proportion of cement may then be added to the contents of the box, and that percentage of cement which can be added to the box without increasing the volume of the contents, will prove the quantity best adapted to the materials being used for that particular concrete.

Finally, the box may be emptied again, and the water added, experiments being made to determine exactly how much liquid will be required to so temper the concrete that it will tamp into the box and barely show water on the surface of each tamped layer. The millwright will have opportunity to note the smaller or larger volume of the concrete when it has been gaged and tamped, and the quantity of water necessary, as determined above, should be carefully maintained through all the work.

STANDARD SAND.

In testing cement, especially in making briquettes, there is used what is known as "standard sand." The engineer or chemist has this sand at hand in quantities, and it is usually made from grinding and crushing quartz rock or some other material, almost pure silica. Sand obtained in different grades by sifting natural sand is not uniformly silicious, as Lake Erie sand, for example, shows mostly shale in the coarser grades, silica in the medium grades, and the No. 80 contains a large number of garnets, while No. 100 is largely of heavy black sand. Hence in obtaining sand for any course of experiments, care must be taken to obtain that either crushed from quartz or obtained from a natural deposit in which the various grades are of the same character. At Ottawa, Ill., is a deposit of natural sand which fills the conditions, and The Sandusky (O.) Portland Cement Company has agreed to undertake the preparation of this sand and to furnish it at a price only sufficient to cover the actual cost of preparation.

Grading Sand.

Sand caught between sieves Nos. 20 and 30 is at present the recognized standard for making up cement mortars for test and for comparison, but it is an open question as to what grade of sand makes the strongest mortar. A sand much finer than No. 20, intimately mixed with the cement in proportion to fill the voids in the No. 20 sand, will yield a much stronger mortar than the No. 20 sand alone. It is the same old story of filling the voids, for No. 20 sand contains as much void space as does the broken stone, and it is only a question of the proper mixing of the various grades of sand in order to obtain the strongest mortar.

Sand for mortar may contain every size which will pass through a No. 4 sieve, but it may be graded in the same manner as the rock and gravel was handled and give better results. In fact, the same apparatus may be used, the addition of the grading sieves being all the extra utensils necessary, though it will doubtless be found better to use a smaller unit than a cubic foot on account of the labor of screening such large quantities of sand. A box, 3-inch cube, and containing 1/64 foot, will answer very well for grading sands for mortar purposes.

Proportioning Cement, Sand and Broken Stone for Concrete.

The time-honored rule is:

Cement.	Sand.	Stone.	
1	2	3	for machine foundations.
1	2	5	for building foundations.
1	2½	5	

Recent advance in concrete proportioning has demonstrated that these rules are far from accurate, and that the quantity of cement and sand cannot be determined by any empirical formula, but must be determined from actual tests of the cement, sand and broken stone or gravel. But in 49 instances out of 50, the 1-2-3, and 1-2-5 rules call for too much sand and cement, and not enough gravel, when the smaller sizes of rock, say ½-inch, be used.

The sand may be tested as noted in chapter VI, page 68, and it will be found that if the sand is screened between No. 16 and No. 20 sieves, and the gravel caught between No. 2 and No. 4 sieves, concrete made of these materials and mixed 1-1-4 will be stronger than any concrete you ever saw before, and that it will not soak up more than 6 per cent. of water. The larger the broken stone or gravel, the less sand and cement will be necessary in order to proportion a strong and impervious concrete, and the millwright can put in a little profitable study in this direction. A very coarse gravel makes a most excellent cement without the addition of sand, or a very little. Usually none will be required, and often some sand can be screened out of the gravel to advantage, the strength of the resulting concrete being increased thereby.

A Scientific Method of Proportioning Concrete.

The author has succeeded in working out, after months of experiment, a method of proportioning concrete which removes entirely the element of guesswork, and enables the inexperienced concrete worker to mix or to proportion the ingredients for a batch equally as well as the man who has worked a lifetime making concrete. In fact, by following the directions given, a novice can proportion concrete far better with the method than the most experienced man can do without the method in question. When using the method described below, it does not matter whether or not the workman has ever had experience with the particular material to be used. It does not matter whether he is to use bank gravel or stone screenings. In either case, there can be obtained from the material at hand the very best results possible.

Curves for Proportioning Concrete.

Prepare a chart, or curve diagram, upon as large a scale as desired, similar to that shown by Fig. 29-a, the vertical distance to be divided into 100 parts and each of these parts is taken as 1 per cent. of the volume of any mixture for making concrete. Divide the horizontal line, at the top, into equal portions of an inch, the figures at the top indicating, respectively, 5/100, 10/100 and 15/100 inch, etc. The curve A is the one for concrete made from 1-inch broken stone. The curve B is for concrete containing ½-inch broken stone or gravel as the largest material used. The curve C is for use when 2-inch broken stone is to be used.

It will be noted that curve A "runs ashore" at the point of intersection between the 100 per cent. line and the vertical line indicating material with a diameter of one inch. In like manner the curve B, for ½-inch rock or gravel, runs ashore at 0.442 inches from the zero line. This diameter represents the size of material which will pass through a No. 2 sieve, the difference between 0.442 and 0.5 being the diameter of the wire used in making a ½-inch sieve. For determining the curve of the 2-inch stone, the chart must be continued to the right until the 2-inch distance is reached, obviously just twice the length of the 1-inch chart.

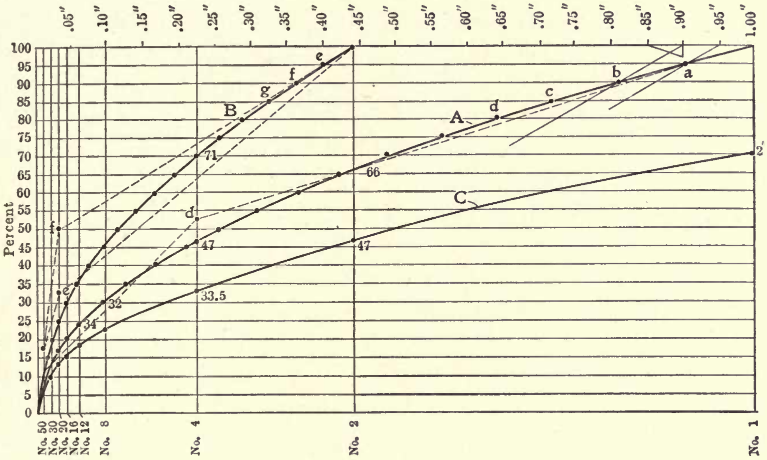

FIG. 29-a.—CURVES FOR PROPORTIONING CONCRETE.

Laying Out a Concrete Chart.

The how and why of this chart cannot be discussed here from lack of space, and it must suffice to say that the author has proved to his own satisfaction, by repeated tests of blocks made according to the various curves and tested to destruction in a compression recording machine, that the curve is so nearly correct that he is unable to determine in which direction the curve should be changed to improve the quality of the concrete made from it.

Having drawn to scale. and divided as shown by Fig. 29-a the lines 0-100 and 100-1.00 inches, place a ruler upon points 0 and .95, and cut the 95 per cent. line at *a*. This is one point in the curve A. Next, place the ruler on 0 and .90 inches, and mark the 90 per cent. line at *b*. This is another point in curve A. Proceed in a similar manner from 0 to .85, .80, .75 inches, etc., obtaining points *c, d*. etc., one upon each of the 5 per cent. lines. When these points are all connected by a line, the curve A is obtained.

To draw curve B, for No. 2 gravel or stone, locate the .442-inch point on the upper line, and consider that point as 100 and divide the distance from the per cent. line (.442 inch) again into 100 equal parts, marking each five of these parts as before, and again drawing lines from each five-point mark to 0. The points where these new lines cut the percentage lines at *e, f, g,* etc., will be points in the new ½-inch curve B, and a line drawn through all the points in question will give the curve as shown by Fig. 29-a. Curve C is found in a similar manner, laying off 2 inches on the upper line, dividing the laid-off distance into 100 parts in groups of five parts each, and then drawing lines to 0, as before.

Along the lower edge of the chart are laid off the screen or sieve numbers, 1, 2, 4, etc. In order to lay down these lines it is necessary to ascertain the size of the holes in each of the sieves or screens used. Each set of sieves must be figured separately. What is right for one make may be wrong for another. The sieves used by the author, described on page 68 of this chapter, have the following mesh openings:

No. 2,	0.442 inch.	No. 50,	0.011 inch.
“ 4,	0.221 “	“ 60,	0.009 “
“ 8,	0.066 “	“ 80,	0.007 “
“ 12,	0.060 “	“ 100,	0.0045 “
“ 16,	0.042 “	“ 120,	0.0038 “
“ 20,	0.034 “	“ 150,	0.0032 “
“ 30,	0.022 “	“ 200,	0.0026 “
“ 40,	0.015 “		

These diameters will be laid off at the top of the chart, beginning at No. 50 sieve=0.011 inch in diameter. The vertical line representing No. 50 sieve, it will be noted, comes very close to the percentage line—only eleven thousandths of an inch from that line, and the space between these two lines will be regarded as filled with cement. On page 65 of this chapter it was noted that no more than 8 and 25 per cent. of the cement should fail to pass the Nos. 100 and 200 sieves. The coarse portion of the cement runs down to about No. 50 mesh, and in the diagram all that portion of the curve to the left of the No. 50 sieve line may be regarded as filled with cement up to the curve corresponding to the size of stone to be used.

Thus, it will be noted that the A-curve crosses the No. 50 sieve line at about 12 per cent. The B-curve crosses at about 18 per cent., while the C-curve crosses somewhere about 9 per cent. It is for accurately determining these intersections that the curves should be drawn to as large a scale as possible—or convenient. The intersections noted above were taken from a large chart, not from the small one shown by Fig. 29-a. Here will be noted the first peculiarity: that 2-inch rock requires only one-half as much cement as ½-inch rock; hence, every time the size of the stone is quartered, the amount of cement must be doubled.

To Determine the Necessary Quantity of Sand.

Taking curve A for 1-inch broken stone, we have found that 12 per cent. of cement should be used with this size of rock. For convenience, we will call it 12½ per cent., or one-eighth of the total weight of concrete, leaving seven parts to be apportioned among the various sizes of sand and stone 1 inch or smaller in diameter. Let it be understood that a quantity of gravel or broken stone is available, and this material will all be caught on the No. 2 screen. The A-curve cuts the No. 2 line at about 66 per cent., therefore the distance above that point, 34 per cent., should be filled with 1-inch broken stone. This is nearly but not quite three times the amount of cement.

But we must use some of the No. 2 stone or gravel, and that size can be put in until it reaches down the curve to some point where it meets the size of sand available. If there is a lot of No. 8 sand in the gravel, the No. 2 may be stopped off at the intersection of curve A with the No. 8 sieve line, or at about 32 per cent. This calls for the difference between 66 and 32=34 per cent. to be composed of coarse No. 2 rock or gravel. There now remains 32—12=20 per cent. of sand between Nos. 8 and 50 sizes. If we have plenty of No. 20 mortar sand, we can put in 32—17 (on No. 20)=15 per cent. of the coarse sand, No. 8, and leave the remaining 17—12=5 per cent. to be filled with fine sand, No. 20.

It is shown, therefore, that a good concrete can be made as follows:

Cement	12	per cent.
Sand, No. 20	5	“ “
Sand, “ 8	15	“ “
Gravel, “ 2	34	“ “
Rock, “ 1	34	“ “

But any number of variations may be made and still secure a good concrete. For instance: were there available only No. 1 broken stone and No. 4 gravel, a good concrete could be made without a bit of fine sand, though a portion of the No. 4 could be replaced by finer sand and the strength of the concrete slightly increased thereby. The dotted line *d* shows the No. 1 and No. 4 combination, the 1-inch rock coming down to about 53 per cent., the No. 4 extending clear down to the 12 per cent., or cement line. This gives:

Cement	12	per cent.
No. 4 sand	41	“ “
No. 1 rock	47	“ “

or, about 1 to 3½ and 4 parts.

Proportions Will Not Work With Other Sizes.

But these proportions of fine and coarse material will not work with other sizes than 1-inch stone. When the size of the broken stone increases, the percentage of fines must decrease—that is, of the fines below No. 8 and No. 12. Contrariwise, as the diameter of the largest aggregate used is diminished in size, so must the quantity of fines and of cement be correspondingly increased. But this increase is not directly according to a decrease in size, as noted in a preceding paragraph where it was found that the cement doubled as the stone quartered in diameter.

CONCRETE WITH FINE STONE OR GRAVEL.

That the proportions of fine and coarse material suitable for large aggregate will not work with finer material is readily seen by reference to curve B, along which the dotted line *f* has been laid down to represent a mixture of 16 2/3 per cent. cement, 33 1/3 per cent. No. 20 sand, and 50 per cent. of No. 2 stone or gravel. This means a 1-2-3 mixture, and it will be noted that its curve (the dotted line *f*) does not coincide very closely to curve B, hence this proportion would not be a desirable one for ½-inch aggregate, though it works pretty well with certain larger material.

Let the quantity of fine material be reduced to equal the cement—one part—which is laid down on curve *e,* and together with the cement forms 33 1/3 per cent. of the mixture, leaving 66 2/3 per cent. of No. 2 stone or gravel. This mixture corresponds to 1-1-4, and it follows the B-curve quite closely. It is evident, however, that the concrete could be slightly improved by replacing some of the No. 2 material with an equal quantity of No. 4, thereby causing curve *e* to approach B more closely at the 70 per cent. intersection. Again, if the No. 20 sand were replaced by No. 12, and the quantity increased until with the cement it amounted to 35 per cent., curve B would be still more closely approached at the No. 8 35 per cent. point, the intersection at *e* being carried almost directly upon curve B.

But with the proportions of 1-1-4, as laid down in Fig. 29-a by curve *e,* the author has repeatedly made test blocks requiring a crushing load of over 2000 pounds to break them when seven days old, and the absorption of these blocks averaged less than 7 per cent. by weight. Thus it is evident that the millwright may make up a pretty good concrete with almost any form of material, provided he can keep the percentages in the curves which "run ashore" in the 100 per cent. ordinate of the largest material used.

LIME IN CEMENT MORTAR.

It is very hard to make cement mortar work easily under the trowel, unless an excess of cement be present above the two or three parts of sand to one volume of cement, as usually mixed. In such cases, it is usual to mix a quantity of lime with the cement mortar. It has been found that 10 per cent. of the cement can be replaced by hydrated lime with good results, and where the cement is to be used under water, a much larger portion of lime, even to 25 per cent., can be used to displace an equal amount of cement without decreasing the strength of the mortar. For dry work, however, no more than 10 per cent. of lime should be used and that lime should be the hydrate. Quicklime paste will not show as good results as the hydrate. Natural cement will stand even more lime than will portland.

Hydrated Lime and Lime Mortar.

A recent addition to the masons' stock in trade is hydrated lime. It is no longer necessary to purchase lime in lumps and to go through the tedious process of "slaking" the lime, then letting it lie from one to three weeks to become properly "aged." Instead of this, the millwright can obtain lime in bags, the same as cement comes, and all ready to be mixed with sand and water and at once laid in the wall. This kind of lime may be mixed up in advance if desired, but it does no good (neither does it do any harm), for hydrated lime requires no aging as is the case when lump lime is slaked; the reason for which is that lime cannot slake instantly, and that some portions of a cask require much more time than other portions, that once the lime is wet, the hydration will continue until it is complete, provided sufficient water is present, hence the necessity for placing the wetted quicklime one side for several days—or weeks—according to the kind of lime, until hydration is fully completed. The process of hydration has been fully carried out in hydrated lime, hence it is ready for immediate use as soon as mixed with sand and water.

Slaking Lime.

Whenever it is necessary to slake lime in the old-fashioned way, the millwright should see that sufficient water is present during the operation. Lime will increase in weight from 25 to 30 per cent. during the hydrating process, but from 40 to 50 per cent. of water is necessary to perform the work of hydration. Although only about one-half the quantity of water supplied to the lime is absorbed, the remainder is dissipated in the form of steam, and the presence of this excess of water is very necessary to keep down the heat developed during the slaking or hydrating operation, which is carried off by, and is used in generating the steam which escapes during the operation.

A high degree of heat is developed during the union of water and quicklime, and unless the heat thus developed is conveyed away from the lime re-crystalization takes place and the value of the lime is seriously impaired. The common name for the process is "burning," and a sufficient quantity of water should always be present to carry off in the form of steam the excess of heat generated during the slaking operation. Thus it is of value to provide plenty of water when lime is to be slacked, and later to place the slaked lime one side, or bury it in the ground, for many days before using. It will do no harm for slaked lime to remain for weeks, or even for months, well covered in the ground, where no carbonic oxide can get at it. Lime can only harden by reabsorbing carbonic oxide from the air or from its surroundings; therefore, keep the lime from the air and it will keep indefinitely.

CHAPTER VII.

ERECTION OF BUILDINGS.

When buildings are to be erected by contract, plans and specifications having been prepared, the millwright frequently has to fill the position of inspector, and it is his business to see that no poor material or bad workmanship is put into the structure. When the labor is being done by the owner, and possibly by the millwright in charge, he must be ready to specify what shall not be done and what shall be done in order to expedite the work. In the one case, the millwright need only see that the specifications and drawings are lived up to, while in the other he is virtually the constructing engineer, and to a great extent the cost of the construction will depend upon his efforts.

MASONRY CONSTRUCTION.

The methods of masonry construction are so well known that the millwright will have little trouble to keep the project up to its proper standard and at the same time turn out the maximum amount of work. The providing of material and the getting it to the hand of the worker at the exact instant it is needed are a large part of the work cut out for the supervisor of construction. But the greatest part of the work is to see that no time is lost, that improved methods are used and that the best work possible is done.

LAYING BRICK.

To keep the bricklayers at all times keyed up to their highest degree of efficiency will tax the powers of the millwright, but he can do it by giving attention to a few things. Let the spirit of competition be awakened among the men, and start two or more gangs at the same time on similar work and give some inducement, moral or otherwise, for them to enter into competition with each other.

See that the head man on each line has charge of that line, and let him give his undivided attention to keeping the line drawn all the time. Let the head man have full and absolute control over the men under him on his line and give no instructions to those men save through the head man. See that mortar is used freely and is kept plentifully supplied and in the best possible condition. Have all joints made by sliding the bricks endwise, and see that the head man permits no loss of time in pointing, while a few men could be hastening matters greatly by occasionally stepping over the wall and helping level up for header courses.

Concrete Construction.

For stone construction, tactics much the same are in order to get the work done quickly and well, and in concrete construction there is the opportunity of a lifetime to save time in getting work out. Just how to do it will depend largely upon the work and surroundings and the quality of the man in charge.

Once the molds are constructed and in place, it is especially desired that they be made water-tight before the concrete is poured. This may be done by making the joints in the forms as tight as possible and, where necessary, by closing them with ordinary mortar, though plaster of paris, puty, sheathing paper tin and cloth are used for that purpose as occasion requires.

The oiling of forms should also be carried out on face work, though in places where the forms can be left in place until the concrete is thoroughly dry, oiling is not necessary if the forms be thoroughly wet before the concrete is poured. Almost any kind of oil may be used, crude petroleum being frequently used, also linseed oil, fish oil, soft soap and other greasy substances.

Making and Placing Forms.

When concrete work first came into use, the forms were made on the spot by carpenters or "wood-butchers," as could be obtained. At the present somewhat advanced state of the art of concrete construction, most of the forms are made in a wood-shop, in a workmanlike manner, from designs prepared by competent engineers and draftsmen, and these forms will not fail in their allotted work. In making designs for forms, the weight of the concrete is taken, including the reinforcement, as 154 pounds to the cubic foot. There is also assumed a live load, including the weight of the workmen, their material and tools, the weight of unused material, etc., which may be taken at 75 pounds a square foot when making forms for floors, and 50 pounds when working beams and girder forms.

Strength of Wooden Forms.

The allowable compression in struts to support forms is between 600 and 1.200 pounds to the square inch, according to the size and length of the strut; and when timber beams are used for supporting forms, including the material in the form itself, the extreme fiber stress may be taken at 750 pounds. In most computations for forms, the deflection of the material is to be considered rather than its strength, and the deflection should be figured not to exceed 1/8 inch for beams and joist work.

When the compression strain approaches 700 pounds to the square inch in soft woods across the grain, either brackets must be inserted to carry the load or hardwood cleats must be used. The modulus of elasticity of soft woods usually employed in form construction may be taken at 1,300,000 pounds to the square inch.

Time to Remove Forms.

As a guide to the millwright for the time forms should be left in place after concrete work is poured, may be cited the following rules in use by The Aberthaw Construction Company:

> Walls in mass work: one to three days, or until the concrete will bear pressure of the thumb without indention.
>
> Thin walls: in summer, two days; in cold weather, five days.
>
> Slabs (floors) up to 6 feet span: in summer, six days; in cold weather, two weeks.
>
> Beams and girders and long spans: in summer, ten days or two weeks; in cold weather, three weeks to one month. If shores are left without disturbing them, the time of removal of the sheeting in summer may be reduced to one week.
>
> Column forms: in summer, two days; in cold weather, four days, provided girders are shored to prevent appreciable weight from reaching columns.
>
> Conduits: two to five days, provided there is not a heavy fill upon them.
>
> Arches: of small size, one week; for large arches with heavy load, one month.

All these times are, of course simply approximate, the exact time varying with the temperature and moisture of the air and the character of the construction. Even in summer, during a damp cloudy period, wall forms cannot sometimes be removed inside of five days, with other members in proportion. Occasionally, batches of concrete will set abnormally slow, either because of slow-setting cement or impurities in the sand, and the foreman and the inspector must watch very carefully to see that the forms are not removed too soon. Trial with a pick may assist in reaching a decision.

Beams and arches of long span must be supported for a longer time than short spans because the dead load is proportionally large, and therefore the compression in the concrete is large even before the live load comes upon it.

The general uncertainty and the personal element which enters into this item emphasize the necessity for some more definite plan of securing safety. The suggestion has been made that two or three times a day a sample of concrete be taken from the mixer and allowed to set on the ground, under the same conditions as the construction, until the date when the forms should be removed. These sample specimens may then be put in a testing machine to determine whether the actual strength of the concrete is sufficient to carry the dead and construction loads. Even this plan does not provide for the possibility of an occasional poor batch of cement, so that watchfulness and good judgment must also be exercised.

Reinforced Concrete.

In looking after the erection of reinforced concrete work, the millwright may have to design small bits of construction, but the majority of such work should be designed by competent engineers who have specialized in that branch of engineering. It is to the credit of the millwright should he study that form of constructural work, and it may be taken in connection with regular structural engineering.

To determine the "layout" necessary for a piece of reinforced concrete, several things must be determined. First, the strains in any member. Second, the amount of each strain. Third, the direction and location of each strain. These points having been determined, it is easy for the millwright to calculate how large a steel section will be required to carry each strain or load, and then he can place the necessary sections of steel exactly where they are required.

As elsewhere stated, the best construction calls for the use of just steel enough (taken with the proper factor of safety) to carry the tensile strains and just concrete enough to carry the compressive strains.

Calculating a Machinery Pier of Reinforced Concrete.

This book cannot be devoted to reinforced concrete to any extent, but to give the millwright an idea of the manner in which the calculations are made for this form of construction, the fol-

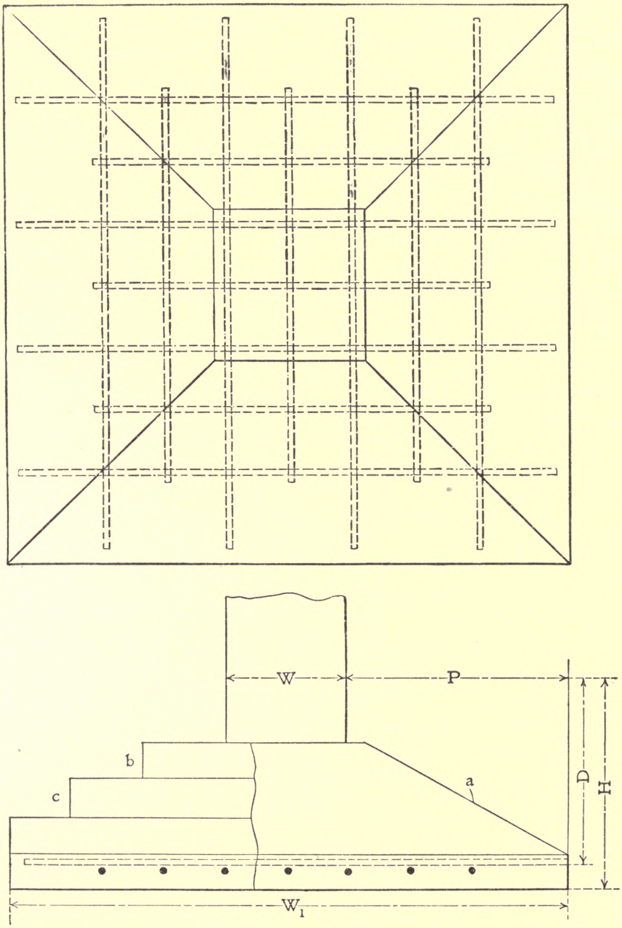

FIG. 30.—CALCULATING A REINFORCED CONCRETE FOOTING.

lowing illustration and calculations are given for ascertaining the steel and concrete necessary for a pier footing, or for the footing of a machine foundation, according to the Ransome system, as shown in a booklet issued by The Ransome Machinery Company.

The pier shown by Fig. 30 is to carry a load of 80 tons, and the safe bearing power of the soil is 2 tons to the square foot. This means that there must be 40 square feet in the area of the footing, and its width, *W*, will be the square root of 40, or 6 feet, 4 inches, or 76 inches. The width of the pier is 16 inches, therefore the projection of the footing, *P*, must equal one-half of 76 inches — 16 inches or 30 inches. The rule followed by this concern for stress in the reinforcing of footings is that the load multiplied by the projection of the footing shall not be greater than three times the depth of the reinforcing from the point where the load is applied to the footing.

The above is evidently based upon the rule by the same company for wall footings, that whenever the safe compressive strength of the concrete equals 35 tons to the square foot there shall be 16 square inches in the area above the bars for each ton stress, or 16 x stress =12 x depth, or the stress equals ¾ of the depth. The stress in tons is ¾ distance of iron in inches from the top of pier.

But in the rule for pier footings, the formula has been modified to fit a short wall instead of a continuous one, with the footing projecting equally on all sides, and they say that the stress shall not be greater (in tons) than one-eighth of the depth of iron in the concrete multiplied by the width of the column where it joins the footing, plus 6. If this value for the stress be substituted in the rule given above, it is found that the depth D equals the square root of 8 times the product of the load L and projection P, divided by 3 times the width W, plus 6.

All the numerical quantities in this expression are known, and bringing them together, we find that:

D equals the square root of $\frac{8\times80\times30}{3\times22}=17$, and the stress will be $\frac{22}{8}\times17=47$ tons. This equals 94,000 pounds, and as a Ransome twisted square bar or rod ¾ inch on a side is tabulated as being good for 85,240 pounds to the square inch to its ultimate strength, one-fourth this, or 21,310 pounds, is its safe working stress. The cross-sectional area of a ¾-inch rod is 9/16 inch, and the rod will be good for 9/16 of 21,210=12,000 pounds. Then, 94,000÷7,840=7.84 rods required. As it is not possible to use a fraction of a rod, eight rods must be used, and, in order to make the disposal of the rods symmetrical, also to place one rod in the center of the pier as shown by Fig. 30, it will be necessary to use an odd number of rods and to increase the number to 9.

Should it be desired to use ½-inch rods instead of ¾-inch, the number required is found to be 17.45, and for the reasons noted above, this number is increased to 18 and to 19. A table of Ransome bars is given as follows:

TABLE II.—RANSOME BARS.

Size of Bar.	Weight to the Foot	Elastic Limit	Ultimate Strength.
1¼ inch square....	5.312	55,450	83,150
1 inch square....	3.400	55,760	84,730
⅞ inch square....	2.603	56,150	84,730
¾ inch square....	1.913	56,720	85,240
⅝ inch square....	1.328	57,890	85,820
½ inch square....	.850	60,120	86,350
⅜ inch square....	.478	61,800	86,600
¼ inch square....	.213	62,350	86,700

The shape of the Ransome bar is shown by Fig. 31, and the bar is found to resemble about as closely as possible the square twisted lightning rods so commonly in use a few years ago. It will be noted that the smaller the bars the greater their elastic limit and their ultimate strength—a convincing argument in favor of using as small a bar as possible in every instance, provided it is possible, with the small bars, to obtain the desired strength of metal without taking up too much room. There is another very strong argument in favor of the small bar, and that is: with the small bar, more surface is exposed to the cement, therefore more

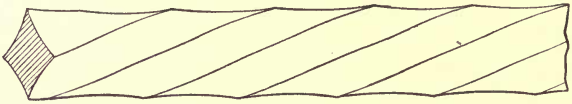

FIG. 31.—A RANSOME BAR.

holding power to transmit the strains from concrete to steel, or contrariwise.

The above matter is easily determined. In a bar 1 inch square, there are 4 square inches of holding surface to each lineal inch of bar. In the ½-inch bar, there are just 2 inches of holding surface to the lineal inch, and as the strength of the 1-inch bar is four times the strength of the ½-inch bar and its surface is only twice as great, it will readily be seen that the ½-inch bar has twice the holding power according to the strain which can be carried as the 1-inch bar.

Solving the Footing Problem by Algebra.

For the millwright who desires to use algebra instead of plain arithmetic in solving the steel reinforcing problem given above, the following has been prepared. It is exactly the same solution as is given above but it is expressed in letters instead of words. The millwright should by all means study algebra enough to enable him to understand it when it is met with in books. And once this knowledge is obtained, the millwright will use algebra in his business. Algebra and arithmetic are about like a band saw and a hand saw. You can do the same work well with either, but one is ten times as quick and twenty times as easy as the other. No need to ask the millwright which is which in that problem, and it is only necessary to add that algebra compares with the band saw.

Calculating a Pier-Footing by Algebra.

Referring to Fig. 30:
Width of pier, $W=16$ inches.
Width of footing, $W=76$ inches.
Total load carried, $L=80$ tons, including weight of footing.
Stress in tension bars, $S=?$
Depth of tension bars, $D=?$
Projection of footing beyond pier, $P=30$.

Formula for obtaining stress in tension bars running in each direction:

$$S=\frac{L\times P}{3\times D} \tag{1}$$

In the above, the stress and the depth are as yet unknown. In order that concrete may not be compressed beyond its safe working strength, it has been assumed that:

(2) $$4\times\text{stress}=\frac{D}{2}\times(W+6).$$

Reducing this formula, it is found that

(3) $$S=\frac{D\times(W+6)}{8}$$

Another value of S has been found in equation (1), and substituting that value in equation (3), there is obtained:

(4) $$\frac{PL}{3D}=\frac{D(W+6)}{8}$$

Solving, we have:

(5) $$D=\sqrt{\frac{8PL}{3(W+6)}}$$

Or,

(6) $$D=\sqrt{\frac{8\times80\times30}{3\times22}}=17\text{ inches.}$$

But from formula (3)

(7) $$S=\frac{22}{8}\times17=47\text{ tons}=94{,}000\text{ pounds.}$$

The bars should be spaced equally over a space W—D=59, therefore the bars should be about 5 feet long. As the total hight of the footing should be D+4 inches, the footing will be 21 inches thick and the reinforcing bars will be placed 4 inches from the bottom.

To be fair with algebra, compare the above with the arithmetic solution of the problem and see how much easier it is to see in the above what is intended to be done in the several operations.

OFFSETS FOR SOLID MASONRY FOOTINGS.

The proper offset for solid concrete footings (without reinforcing) may be found by the following table by Kidder, which also gives the necessary data for calculating footings of other material, the dimensions being given as multiples of the thickness of the course to be offset.

TABLE III.—SAFE LOAD FOR MASONRY FOOTING COURSES—KIDDER.

Kind of Footing.	R* in pounds to the square inch	Offset for a pressure to the square foot on the bottom of the course, multiply thickness of course by the proper factor.					
		0.5 Ton	1 Ton	2 Tons.	3 Tons.	5 Tons.	10 Tons.
Bluestone flagging....	2700	3.6	2.6	1.8	1.5	1.2	0.8
Granite..............	1800	2.9	2.1	1.5	1.2	1.0	0.7
Limestone...........	1500	2.7	1.9	1.3	1.1	0.9	0.6
Sandstone............	1200	2.6	1.8	1.3	1.0	0.8	0.5
Slate................	5400	5.0	3.6	2.5	2.2	1.5	1.2
Best hard brick.......	1200	2.6	1.8	1.3	1.0	0.8	0.5
Concrete { 1. Portland cement 2. Sand..... 3. Pebbles	150	0.8	0.6	0.4	...	...	...
Concrete { 1. Rosendale cement 2. Sand..... 3. Pebbles..	80	0.6	0.4	0.3	...	...	...

*Modulus of rupture, values given by Prof. Baker in " Treatise on Masonry Construction."

INSPECTION DURING ERECTION.

When buildings or other concrete or reinforced concrete work is being erected, if the millwright is inspecting the work or is having it done under his direction, he must make sure from actual knowledge of the matter that the proportions of cement and sand and of gravel are as called for by the specifications. He must know that the concrete is poured or rammed so that water stands on the surface. He must know that the required reinforcing is actually put in place as required by the drawings.

It must be known that the concrete is packed fully and compactly around each piece of steel in the reinforcement, and that there are no voids caused by leakage of cement from the forms. The writer has more than once seen scurrying around and amusing attempts made to stop a leak in a form for fear that the cement would run out and leave the beam weak and unable to carry its load. There is no danger of such a happening when there is a leak in a form. The danger is that where the cement runs out there will be a void in the construction, and what weakening takes place will be from a hole not from the cement running away from the aggregates.

HOLDING THE CONTRACTOR TO SPECIFICATIONS.

There are three ways of doing inspector work, but only one of them is desirable. The first way is to hold the contractor rigidly to the specifications, to make him toe the mark whether there is a reason for it or not, and, as one contractor said of his inspector, "The cuss lays awake nights to think up things he can kick about." It is needless to add that this inspector is not beloved by the contractor, and that in case of a blunder by the inspector—and inspectors fall down at times the same as all other people—the contractor will not do a thing to help the inspector out of his trouble.

There are many things which can be done a little different than called for by the specifications and still be as good, perhaps a little better, and not cost the contractor half as much. This brings us to the second method of inspecting, the one which alone is of value, and which should be followed by every millwright. It costs nothing, obtains big results, and makes things pleasant all around.

The Give and Take Method of Inspecting.

This is the best method of inspecting. It makes the contractor into a friend who will do anything to help the inspector, and who will not do one thing when the inspector is present and another thing when that official's back is turned. Let the contractor be assured that the inspector desires to help along the work to the utmost, while strictly maintaining the required character of the work, and things never drag on the job. The concrete is always just right, the steel comes into place almost of itself, the forms go in place and come away as if by magic, and the work turned out is strong and perfect in requirements and in appearances, while the contractor is making money hand over hand.

Inspecting for Graft.

The third method of inspecting is where the contractor can get nothing or do nothing to suit unless he keeps the hand of the inspector well covered—yes, well filled—all the time. The "graft" inspector is heartily despised by the contractor; and he is fired by the owner—as soon as discovered. There is nothing too bad for the graft inspector to do to the contractor in order to get a little more boodle out of the job. And there is nothing too bad for that sort of an inspector to receive from his employer. Some contractors, those who do not intend to do work any better than they are forced to do, will welcome the advent of the graft inspector, while at the same time they despise him and will "throw him down" the moment they can make nothing more by his rascality.

There are other contractors who will report a graft inspector so quick that he never knows in what manner he was discharged —so quickly was he ousted from his position. The millwright, in what inspecting he is called upon to do, will let the first and last methods of inspecting severely alone and will stick like a burr to the middle course—a pretty good way to do in other things beside reinforced concrete inspecting. He will "give and take" and show good results.

WOODEN FACTORY CONSTRUCTION.

A great change has taken place in mill construction during the past few years, even in wooden buildings which are the exception rather than the rule. The mortise, tenon and pin are hardly ever found in modern mill construction, and where days and weeks were spent in framing harness-work for shafting, there is nowadays, no framing to be found. In mills built according to slow-burning construction rules, the lighter timbers have entirely disappeared. Floor joist and bridging have been replaced by 10x14-inch solid timbers and 3 to 5-inch floor plank. The roof is as heavy as a floor and is constructed in the same manner. There is no sheathing, and consequently no covered-in space to conceal rats' nests or to contain fires which could not be got at until after the roof had burned off.

FRAME STRUCTURES.

Mill buildings constructed of wood are so scarce that it hardly pays to spend much time in discussing them, save that, as above noted, they are built according to slow-burning construction rules, or else they are mere sheds, thrown up "balloon frame" fashion for temporary use or to be later replaced or enclosed with brick work.

OLD-TIME FRAME CONSTRUCTION.

Old-time frame construction is pretty well illustrated by Fig. 32, and the excessive amount of handwork necessary for the mortising, tenoning, brace-making and gain-cutting may well be imagined. In the engraving, the heavy sill is shown at *A,* a post at *B,* and a girt at *C.* These timbers were made anywhere from 10x10 inches up to 20x24 inches, according to the size of the building and its hight. The wall studs *E, E,* were framed in at both top and bottom, and the floor joists *F, F,* and *G, G, G,* were also let into the timbers upon which they had a bearing.

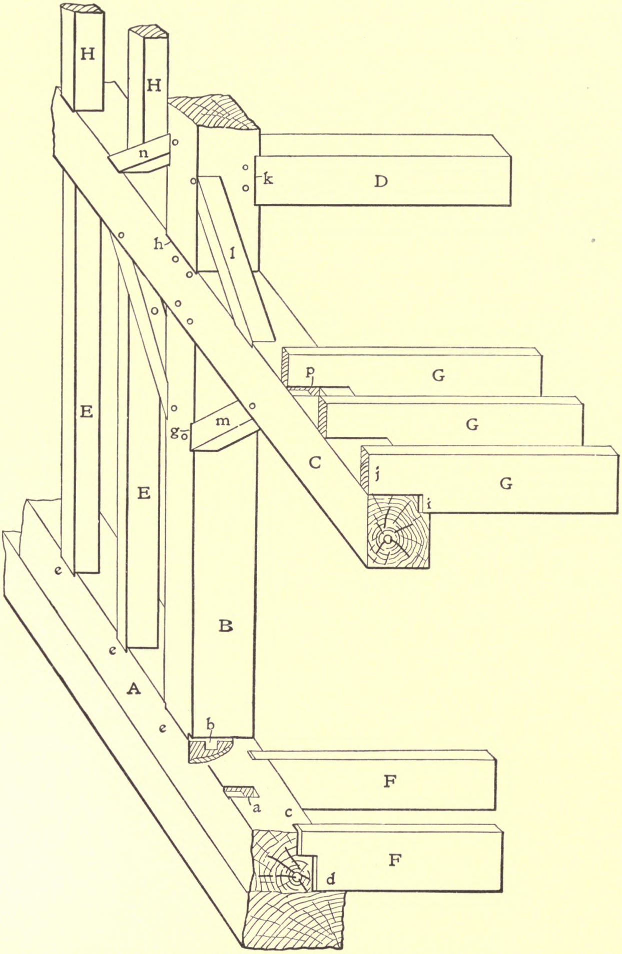

FIG. 32.—SOME OLD-TIME FRAMING.

The cut on *A*, at *c*, shows how the floor joist *F* was framed. The notch or gain, cut in the side of *A*, permits the end of *F* to enter, and the shoulder *d*, left on *F*, is made just right to reach the foundation of the building.

The upper floor joists were disposed of in a slightly different manner, made necessary by the fact that there was no foundation for the floor joists to rest upon. Accordingly, the upper portion of the joist *G* was allowed to project over the top of girt *C*, and the lower edge of joist *G* was carried by a gain cut in girt *C*, as shown at *i*. By this arrangement, the joist is prevented from splitting between *i* and *j*.

The post *B* is mortised into sill *A*, as shown at *b*, the sill being broken away to reveal the tenon *b* which is usually made very short for a post. The tenons on the upper end of *A* are long enough to reach nearly half way through girt *C*. Pins are used to fasten all parts of the frame except those tenons which go into the sill, which does not receive any pins.

Sizing Timber.

Another thing which the old-time millwright had to contend with in framing a mill was the unequal sizes of the timbers furnished. A 12x12-inch timber would be anywhere between those dimensions and 12½x11⅞ inches, and when a timber was the least amount larger than dimensions, allowance had to be made for the extra material or the frame would never go together. The mills of that time did not have timber planers. Any lumber larger than ⅞-inch boards, or possibly 2-inch plank, which had been planed, was a curiosity to the average woodworker, and the extra material on two sides of nearly every timber had to be cut away where the end of another timber came.

Sizing is shown at *e*, *e*, also at *h* and at *k*, and a cut through the excess of material is also shown at *a*, where the sill is cut down to the exact dimension size in order that the studs may go into place without striking top and bottom before the girts are in place. Many a time all hands have been held up with a big timber held aloft on pike-poles, while a workman skittled up a ladder and held on by his eyelids while he hurriedly cut away the shoulder of a stud in order to make up for a forgotten bit of sizing underneath one of the girts.

Bracing was another strong point in the old-time method of framing. A set of braces is shown at *l, m, n* and *o,* each brace being mortised and pinned at each end. It used to be thought that a large amount of bracing was necessary to make a frame stand up until the covering could be put upon it, hence the many dozens of braces to be found in a single frame building of the olden style.

Even the upper studding *H, H* was mortised in, and these studs had to be sized for, as shown at *p,* on girt *C,* and even the beams and girders had to be sized into the posts sometimes. A bit of sizing is shown at *k,* the beam *D* being cut into post *B,* as shown. But this time the work is not for the purpose of removing an excess of wood. The cutting at *k* is for the purpose of giving a larger bearing to *D* than would be afforded by the edge of the tenon. Therefore a half inch or so was cut out of the post and the beam allowed that much more bearing surface. With a 12-inch post and a 3-inch tenon, there would be 4½ square inches of bearing surface, besides the 16 to 18 inches of area on the edge of the tenon.

Balloon Framing.

When the heavy frame went out of fashion—chiefly by the higher cost of lumber and labor—a reaction in the opposite direction set in, one extreme following the other, as usually is the case, and the most flimsy framing arrangement it was possible to devise came into use for houses, barns, and even for mills where heavy machinery must be operated. The standard method of balloon framing is shown by Fig. 33, and the writer has seen mills built in this manner, of 2x8-inch material, with occasional reinforcement of 2x12-inch stuff, and 3 and 4-inch shafting hung directly to timbers carried by the light framing shown by the engraving—something not desirable or safe.

In the pure balloon frame the sill is composed of two pieces, usually a 2x8-inch and a 2x6-inch, spiked together as shown by *A* and *B*. The 2x4-inch or 2x6-inch studs are cut to length, as shown by *C, C, C,* and plain at each end. The studs are nailed and spiked in position, being toe-nailed to *A*, and spiked through *B*. The floor joists are cut so as to have a full bearing at *a* and *b,* thus removing all danger of split floor joists. In case the building is to be set on posts, the sill-plank *A* is doubled up, the plank *B* being made as wide as the floor joists, which then will have a full bearing on sill *A*.

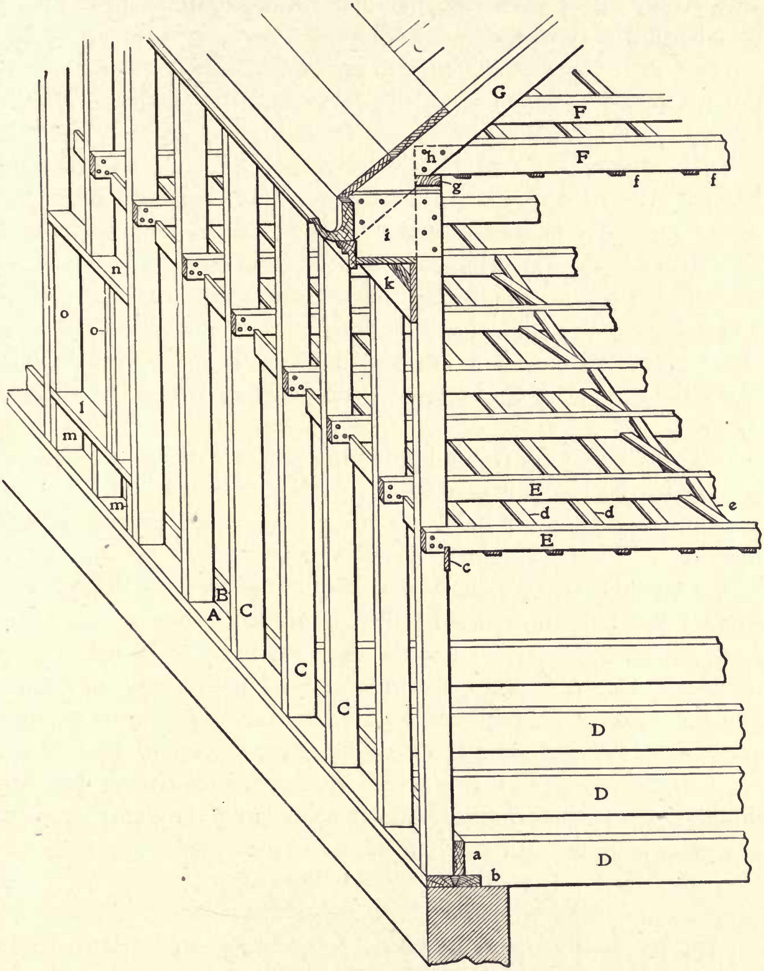

FIG. 33.—BALLOON FRAMING.

The second story floor joists are put in place as shown at *E, E,* a ledger, *c,* being let into the line of studding about ½ inch and the ledger nailed fast. The joists *E, E* are notched on to the ledger about ½ to ¾ inch as shown, and then they are spiked fast to the studs, which holds them securely. These joists are bridged as shown at *e,* and the lower floor joists are also bridged unless a timber is run through under the center of the span. The strapping *d, d* is next put in position, and the upper floor may be put in at will.

A 2-inch plate is spiked on top of the studs, the rafters *G* are notched and nailed upon the plate, and the beams above the second story are placed on the plates and nailed securely thereto, besides being spiked to the rafters, a joist being placed close beside each of the rafters for this purpose. Sometimes the upper joists are notched down over the plate ½ inch or so, and besides holding a good bit, that method forms a very good means of bringing the joists into position on the plate. Strapping, *f, f,* and bridging as well, are applied to the upper joists as necessary, short pieces of board, *i,* are nailed to each rafter and stud to carry the coving or cornice, the wide facier of which is indicated by *k.*

In constructing a frame by this method, no attention whatever is paid to the location of either windows or doors, but after the studding is all in place holes are cut where needed for the various openings. In the single window opening shown by Fig. 33, a single stud is cut out, though it frequently happens that two or more must be removed. In this case the header *n* and lintel *l* are cut in, then the short studs *m, m* are put in position to hold up the lintel. Short studs *o, o* are then cut in between header and lintel placed the required distance apart to receive the window frame; then the short studs *o, o* are doubled up to receive the weather-boarding and the window frame. It always pays to double up the window studs, also the lintels unless plenty of studs are placed underneath the lintels.

SHAFTING HUNG TO BALLOON FRAME.

Whenever the writer has been forced to put shafting of any weight into a balloon frame building, it has been his custom to put in a heavy ledger, as shown at *A,* Fig. 34, and then put some bolts *b, b,* through ledger and studs, instead of nailing the ledger in the usual manner. With a ledger 4x8 inches let into the studs 1 inch at *a,* and bolted securely to them at *b, b,* there will be no trouble in sustaining the timbers *B, B,* the inner ends of which may be carried on posts placed for that purpose, as shown by *C, C,* the posts being in turn carried by a stringer, *D,* which also answers to carry one end of the floor joists *E, E.*

The timbers *B, B,* instead of being mortised into posts *C* as would be done by the good old-fashioned way, are bolted to them by a single 7/8-inch bolt each, well washered, and then a piece of 2x8-inch stuff is placed against the post and spiked, as shown at *d* and *d.* This gives 16 inches of bearing surface and the timbers *B, B* never think of getting loose and shaft *c* may be placed anywhere desired.

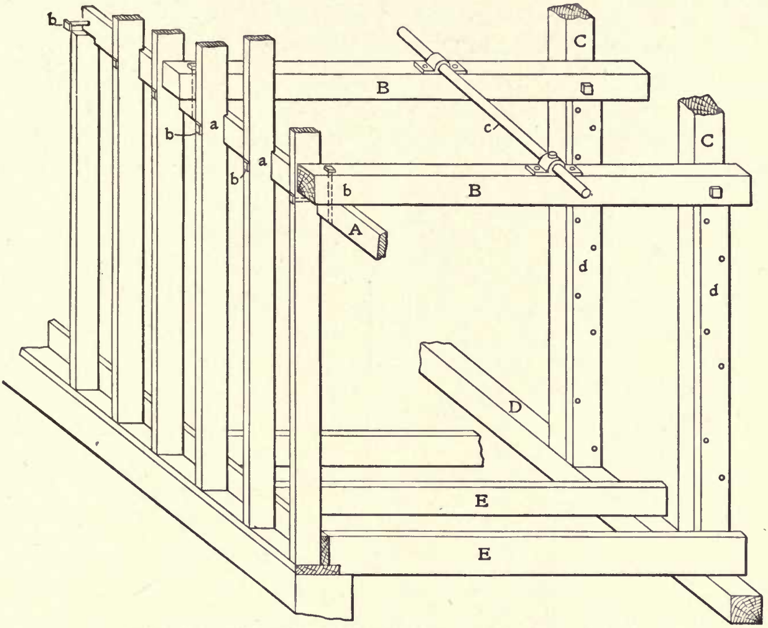

FIG. 34.—SHAFTING HUNG TO BALLOON FRAME.

Slow-Burning Mill Construction.

It does not pay to bother with balloon framing or mortise and tenon frames when the type known as slow-burning mill construction can be used. This form of construction costs a little more than balloon framing but not as much as the mortise and tenon method and its use should be encouraged whenever the owners can not be made to use reinforced concrete or steel construction. As shown by Fig. 35, the construction is very simple. Rows of posts, *A, A, A,* are located as necessary in accordance with the load to be carried, and beams *B, B, B* are placed on top of the posts as shown; bolsters *D, D, D* are placed between posts and beams, and bolts placed through each, making the beams continuous. The beams over the next bent, *F,* are fastened as above to *B,* etc., the bolts being shown at *a, a, a.*

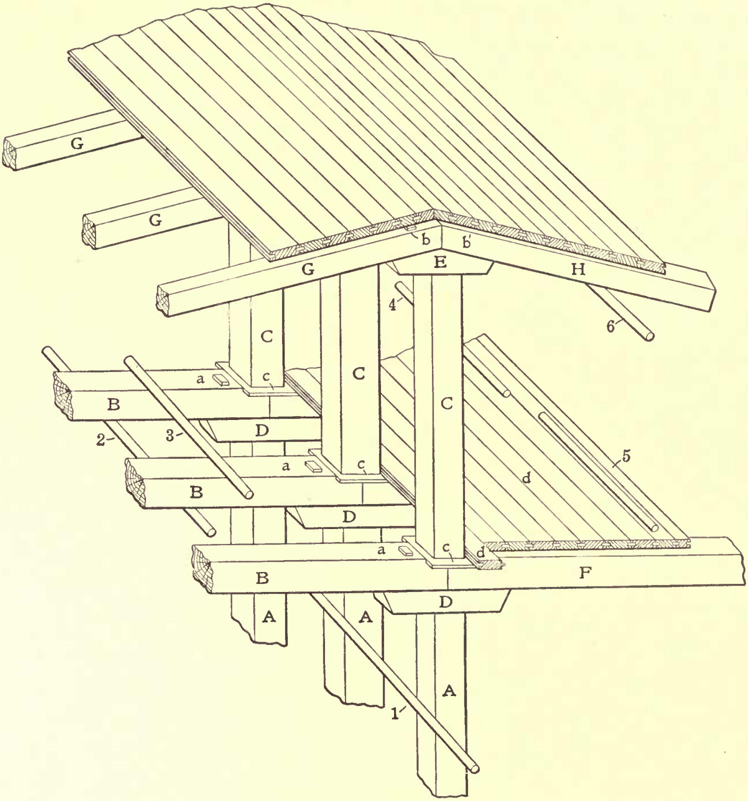

FIG. 35.—SLOW-BURNING CONSTRUCTION.

If the load is to be very heavy, bearing plates *c, c, c* are placed as shown and serve not only to protect the beams *B* and *F* from end-wood of the posts, but also as bearings for the planks *d* when the latter are cut in between the posts. Posts *C, C, C,* in the next story, are placed as shown, and in this manner continued to the roof. If there are but two stories, the arrangement is as shown by the engraving, but any number of stories up to four may be safely framed in this manner. A block *E* is beveled to fit the rafters and is fastened to them by the bolts *b, b,* thus uniting rafters *G* and *H* as firmly as is necessary. When necessary, a truss roof may be used, leaving a clear upper story.

The flooring and the roofing is simply thick planking, from 3 to 5-inch, according to the distance between beams *B, B, B,* and the load to be carried on the several floors. Sometimes floors are made by setting 2x4-inch stuff edgewise and spiking them together every 18 inches with 20 penny wire nails.

With this form of construction, machines may be located anywhere on the floor of the factory, and unless the machines are quite heavy no reinforcing of the floor will be necessary. The distance between beams *B, B, B* is usually about 6 feet, and shafting may be suspended from any post or beam, or it may be placed upon the floor of the factory at will. In Fig. 35, shafts are shown unsupported at No. 1, attached to the posts; at No. 2, and No. 3 hung underneath and placed on top of the floor beams; at No. 4 the shaft is hung to an upper row of posts, while shaft No. 5 is placed on the floor and No. 6 is hung directly from the rafters.

FRAMING ON THE JOB AND AT THE MILL.

The old-time method of framing was to have the lumber dumped on the ground at the mill, then it was sorted, piled, and marked out by the "striker," after which each piece was squared up, mortised, tenoned, relished, gained, boxed, or otherwise cut, as required by the form of construction to be followed. This method of doing work was good for local labor, but it was not an economical method of doing work. The modern way of procedure is to send the drawings to the mill where the bill of material is to be gotten out. Send a man with the bill—an inspector, if you please, or the millwright or a good framer—and let that man see that the material is properly gotten out from lumber fitted for the several purposes.

In a mill properly arranged for framing, the cost of that part of the work will be reduced from ⅛ to ¼ that of hand framing, and the cost of lumber will also be considerably reduced for the reason that at the mill pieces can be worked to better advantage than they can be told off to fill a schedule of lumber.

ECONOMY OF MATERIAL—LUMBER—INSPECTION.

The inspection of lumber for market purposes calls for a rigid adherence to certain rules. For instance: on a stick of certain size, there shall not be more than a certain amount of wayne on a certain number of corners. There also shall be no more than certain numbers and lengths of wind-shakes, season-checks, and similar defects. The limit exceeded, the inspector has no choice whatever except to condemn the piece of timber thus defective and reduce it to a grade in which it will, according to the rules, pass muster.

But in framing at the mill, the fair-minded inspector can in many ways favor the material, so that what would have to be condemned in the pile will pass in the frame. For instance in the rule against wayne: a 2x8-inch rafter would have to be condemned if it showed more than a certain width of bark on one or more corners, whereas in the building nearly the entire length of the rafter, from the ridge down to within 2 feet of the plate, could be all bark edge without doing the least damage to the strength of the rafter, for those members of the building economy do not need to be as wide (deep) at the top as at the bottom. In fact, rafters are frequently sawed 2 inches narrower at the top than at the bottom. The inspector, bearing that fact in mind, can pass lumber into good rafters which he would have to condemn in the pile.

In another instance: the rule against large knots would condemn many pieces for rafters which could be used for gable rafters or where they would be otherwise supported. The same is true of floor joists and all floor timber. It does no harm whatever for a floor timber to be narrower at the ends, provided the middle of the timber is full depth. A lot of wayne at either or both ends could be passed into the frame without in the least affecting the strength of the structure. In many ways, of which the above are merely samples, the inspector-framer can save money for his company by framing at the mill. The writer has, in more than one instance, purchased a frame at a reduction of several dollars on a thousand, and economized to the extent of a thousand or two feet of lumber, by taking the lumber mill-run and using it as common-sense dictated, placing merchantable pieces where strength was required and working the culls into the frame where they could be used without injury—and there are lots of such places to be found by those looking for them.

In framing at the mill, it is meant that not only is the actual work of framing done at the mill, but the cutting is also done in the mill, by power, the cutting-off being done with power saws, the cutting of shoulders being done in that manner, and the boring and boxing (or dapping) all being done by power machines.

LAYING OUT FRAMING.

By the old methods, mortises and tenons were laboriously laid out with steel square and pencil, the distances first having been measured with 12-foot pole, rule or square. Fig. 36 shows the time-honored way it is done: the mortise having been located endwise by a mark made at *b,* the square is put in position as shown, the mark *b* drawn clear across the timber; then the square is slid along until the length of the mortise is shown on the blade of the square—10 inches—as shown. Then the pencil is drawn across the timber for the other end of the mortise *a,* but the pencil must be drawn along the inside edge of the tongue of the square. If it is desired to mark along the outside of the tongue, then 8½ inches must be taken on the blade instead of 10 inches.

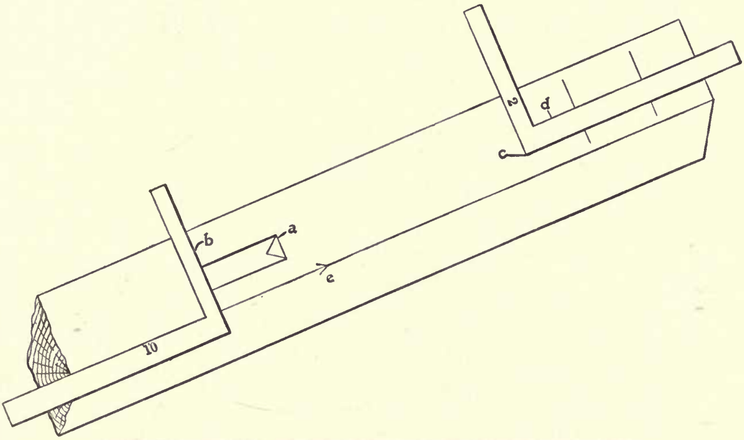

FIG. 36.—LAYING-OUT WITH THE STEEL SQUARE.

To mark the sides of the mortise, a mark *c* is made the required distance from the face of the timber *e;* then the square is placed as shown; if a 2-inch mortise is to be made, with the corner of the blade on the mark *c*. Then sight the blade true with face of timber *e*, and mark both sides of the blade, thus marking the sides of the mortise. When greater accuracy is required, reverse the square, placing the inside edge of the blade on mark *c* well toward the end of the blade farthest from the tongue. Then bring the mark 2 on the tongue even with face of timber *e*, and both sides of the mortise may be marked as before.

THE LAYING-OUT GAGE.

The modern method of marking for mortises, tenons, and more especially for daps and gains, is by the use of the laying-out gage shown by Fig. 37. This tool is usually made by the millwright, though it may be found on sale in some of the larger hardware stores. A couple of pieces of 7/8, 1 or 1½-inch stuff may be used, according as the tool is designed for light or heavy work. The pieces are nailed or screwed together as shown by Fig. 37, and laid off and cut to measure according to that picture. The upper pieces are made to the several lengths likely to be used by the mortises or daps in the sizes of timber under operation.

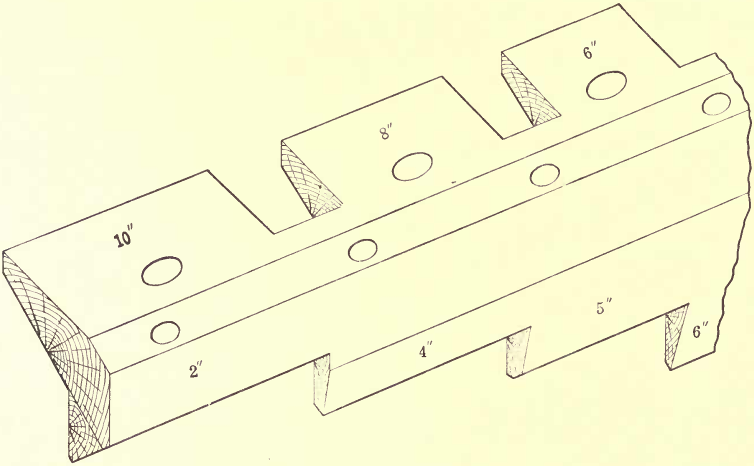

FIG. 37.—A LAYING-OUT GAGE.

The lower side of the gage is marked to the widths shown by the several figures, the first being the distance from the face of a timber to a mortise with a 2-inch shoulder, the second step making a 4-inch mark, etc., as many jogs being made as the millwright judges he will have use for. The angle at which the pieces are nailed together should be slightly greater than a right angle, for should some of the timber be sawed as far from square as usual, a strictly square gage would not go on the corner of the timber. About 95 degrees is all that is necessary. Any timber which is so badly out of square that a 95-degree gage will not go on had better be trued up a little before the timber is laid out for framing.

Using the Laying-Out Gage.

A method of using the laying-out gage is shown by Fig. 38. Supposing that a 2x10-inch dap is required, all that is necessary is to slide the 10-inch portion of the gage up to marked point *a,* then draw the pencil along both sides of the 10-inch portion of the gage, marking both lines *a* and *b* without shifting the tool. It happens that the gage is also in position so that line *c* can be marked along the edge of the 2-inch portion, but if the dap is to be some other depth than 2 inches, then it is only necessary to slide the gage along until the required width of marking strip comes over the end lines of the dap—or "box" as some millwrights prefer to call it. The gage must then be reversed and the lines struck down to line *c,* from lines *a* and *b,* respectively.

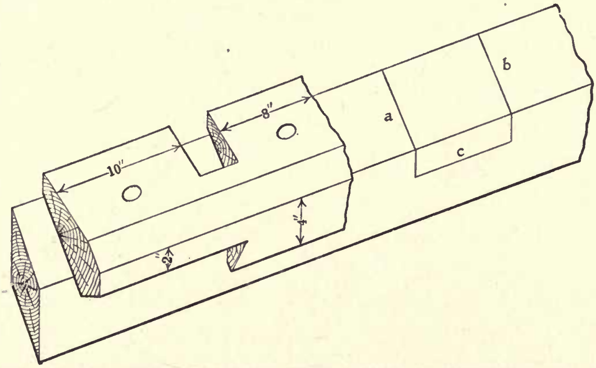

FIG. 38.—MARKING "DAPS" WITH THE LAYING-OUT GAGE.

This instrument is particularly desirable in working wayney timber upon which it is hard to make a square stay in position. When making mortises and tenons, both the mortise and the tenon as well are struck with the same sections of the gage, and the holes in the upper portion of the gage are for the purpose of marking for the pin-hole to be made in each mortise or tenon—the "draw-bore" as it is sometimes called. The required draft has to be allowed on the tenon as the holes mark all alike, both mortise and tenon, and it is not possible to tip up the gage when marking the draw-bore on the tenon as is the usual practise when the square is used for that purpose. Fig. 39 shows the method, the square being applied as shown, the center of the stick or the required location of the hole being taken at *a*. The tipping of the square causes the distance from shoulder to hole to be foreshortened, the width of square tongue or blade forming the hypothenuse, the distance the back of the blade or tongue is raised forming the perpendicular of the triangle, which requires about 1/8 inch less than the width of the square as a base in order to give the correct "draw" to the tenon.

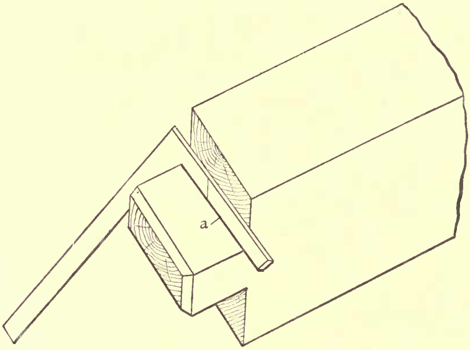

FIG. 39.—MARKING "DRAW-BORES" WITH A STEEL SQUARE.

A UNIVERSAL LAYING-OUT GAGE.

While gages as shown by Fig. 37 are particularly desirable for work where one or two sizes of timber are to be framed, the writer prefers several gages of that kind, but each one made for a single size of mortise or dap—particularly for flume framing, for barn work, or where there are to be many mortises or daps of the same shape and size in timbers of the same size.

For universal work, particularly for jobs where there are many mortises or daps in all sorts and kinds of timbers, the writer uses a gage which he made for that purpose, as shown by Fig. 40.

This tool is simply a sheet of hard, or half-hard brass, a little more than 1/16 inch thick, 12 inches long, 18 inches wide, and bent to 95 degrees as shown by the engraving. The sheet is not bent in the middle, but one leg is made wider than the other so that side *c* will be as wide as the largest timber to be marked. One edge of the tool is graduated at *c* into inches, halves and quarters, and a small hole is drilled at the end of each line forming the graduation, as shown. When a mortise or a dap is to be marked out, the end of the tool, *d,* is brought to the line where the cutting is to start and a line is marked across the timber, using the end of the brass tool as a straight-edge or square.

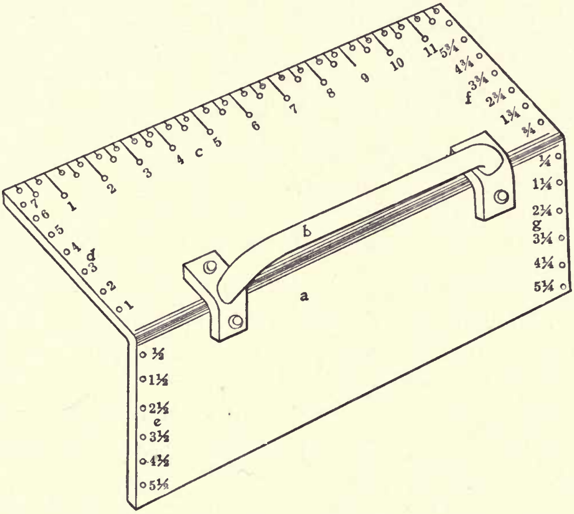

FIG. 40.—UNIVERSAL LAYING-OUT GAGE.

To draw the longitudinal lines, the scratch-awl or pencil point is placed in one of the holes *c, d, e, f,* or *g,* according to the distance from the edge that it is desired to draw the dap line or the tenon or mortise line. As may be seen, even inches are drilled at *d,* half inches at *e,* and the quarter inches on the other end of the tool at *f* and *g.* With the scratch or pencil in one of these holes, the tool is given a lengthwise movement on the timber and works exactly as if it were a scratch-gage. The handle *a* is riveted in place, countersunk holes being made for the rivets so that the tool will be perfectly smooth inside.

The great objection to this tool is the liability of making wrong marks owing to the numerous holes through which the scratch may be thrust. But as the tool is not as bad in this respect as the steel square, that point cannot be brought against it. To mark the foot of the mortise, the scratch is placed in that one of the *c* holes which represent the length of the mortise when end *d, e,* is on the head line of the mortise, which is the first position of the tool. If the mortise or dap is to be 8 inches long, the line is squared across by drawing the scratch or pencil along *c,* then the scratch is pressed down into hole *c*8, the tool moved one side until the scratch-point mark is found, then the scratch is replaced in that mark, the tool up against the scratch, and the foot line of the mortise is struck across the face of the timber.

Working From "The Face Corner."

When a millwright starts to lay out a stick of timber, the first thing which should be done is to select the working corner of the stick and to mark that corner in a manner easily distinguished from other corners of the timber. Usually a single line is made on each of the two best sides of the timber, the marks meeting on the corner which is to be taken as the work corner. This method of marking is shown at *e,* Fig. 36, and in framing that timber the square or gage should never be applied to other than the marked sides *e* and *c*. That is, the tools should never be applied to other than the two sides in question for the purpose of squaring a line around that timber.

Squaring Around a Timber.

The matter of squaring around a timber is shown by Fig. 41, both the right and the wrong methods being shown. The best face is first selected and marked *a,* then the next most desirable side is selected and marked as at *b*. Squaring around the timber is commenced by placing the square at *d* and making a fine mark across the face *b* of the timber; then the square is placed as shown at *c* and another line struck down the back side of the timber.

So far so good, and the operation is correct. Next, the square is placed at *e,* which is wrong, as will be developed later. The pencil is used on the bottom of the timber and the square, placed at *f,* is brought to the line on the bottom of the timber. As will be seen at *g,* the lines *d* and *f* do not come together on the corner of the timber, and it is evident that something is wrong. Had the timber been perfectly parallel or one end as wide as the other side the lines would have come together on the last corner, no matter how the squares were placed, but when the timber is wedge-shaped in one or more directions it is impossible for the lines to meet when the squares were used as at *c, d, e* and *f.*

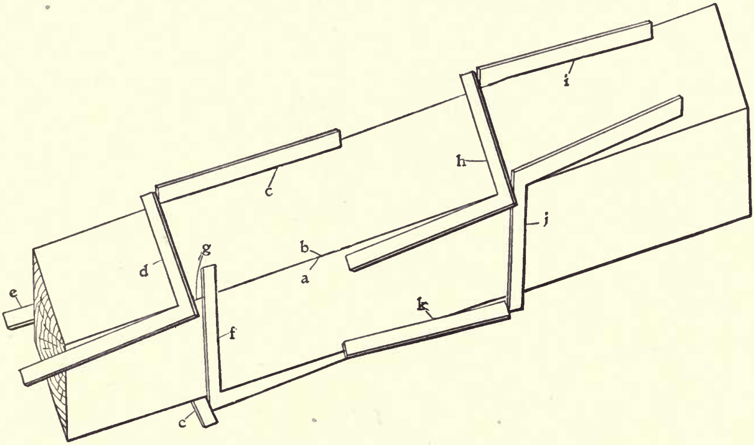

FIG. 41.—SQUARING AROUND A TIMBER.

To prevent such a happening, always apply the squares on the marked faces of the timber, as shown at the right of Fig. 41. Never place the blade of the square against other sides than *a* and *b* and there never will be trouble from lines not meeting. As shown, place the squares at *h* and *i,* marking as when they were at *d* and *c,* which, as stated, is all right. Next, instead of rolling the timber ahead and applying the square at *e, e,* roll the timber backwards and place the square at *k,* bringing it even with the mark made when the square was at *i.* The mark having been made along the square at *j,* reverse that instrument again and place it with the blade on face *b* again, as shown at *h.* With the tool in this position, the line to be struck across side *a* of the timber will come fair with the first line made at *h*. If the lines do not come fair with each other, the trouble is in not holding the square properly or in not meeting the lines on all sides of the timber. The trouble is not from the cause which gave trouble at *g*.

Taking Timber Out of Wind.

When timber has not been squared up at the mill, it is sometimes necessary for the millwright to take a stick "out of wind." That is he must make both ends of a given side of a timber line up with each other. A method of performing this operation is illustrated by Fig. 42. When the square is placed upon this timber, it is found that at end *b* the square when held firmly to side *a d* strikes the timber at the corner *b*, but is open on the other side of the stick. At the other end of the timber, it is found that the square hits the wood at the far end of the blade, near *f*. Should two squares be placed as shown at *e* and *f*, or two parallel pieces of wood be thus placed, the eye, sighting from *d* over the two squares, will discover that they are not parallel with each other, that one runs up-hill, the other down, exactly as the timber is.

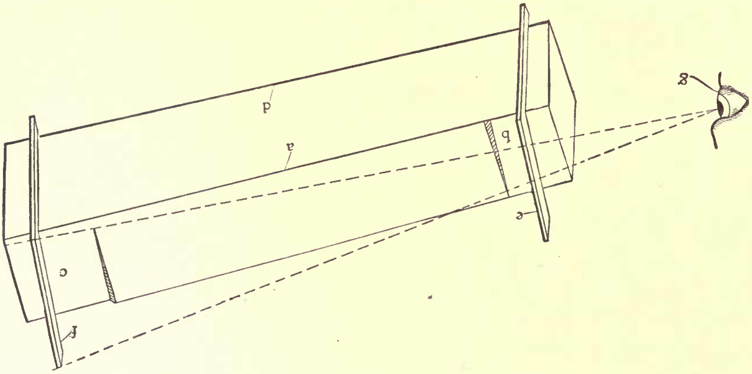

FIG. 42.—SIGHTING AND SPOTTING TIMBER OUT OF WIND.

To remedy the defect, hew or chisel off the surface of the timber, as shown at *b* until the square will hang fair on *b*, also on side *a d*. Next, perform the same operation at *c*, but here the cut will be found on the opposite side of the timber, and the cutting must be done until the squares are in line, as determined by the eye at *g,* not by making the square fit sides *c* and *a d.* If the latter named side fits the tongue of the square after the timber is spotted off at *c,* then so much the better, and we know that side *a d* is in line as well as side *b c.* But if side *a d* does not fit square *f* when that tool is lined up with square *e,* then there is a chance for a little cutting on side *a d* as well as at *b c.*

"Boxing," or Cutting "Daps."

When the framing is done at the mill, "boxing" or "dapping" is either done by large dado-heads or the timber is placed upon a Daniels planer and the greater part of the cutting done by that machine, after which the work is finished by hand. The dado-head method is by far the best, and if the mill does not contain such a tool a special machine should be rigged up for that purpose. But in cutting daps by hand the method used should be according to that shown by Fig. 43.

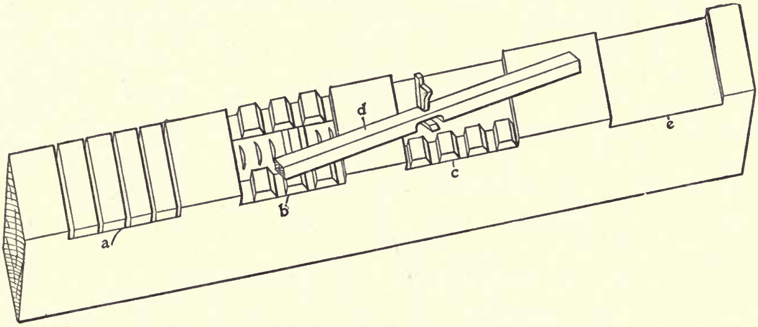

FIG. 43.—"BOXING" OR CUTTING "DAPS."

The dap having been laid out as described in a preceding paragraph, a saw-cut is made just inside the line at either end, as shown at *a,* Fig. 43. Two methods are followed: Either several saw-cuts are run down to the line *a,* and the wood between the cuts removed with the mallet and chisel or the adze; or the latter tool may be employed as soon as the two end saw-cuts have been made. As shown at *b,* the wood inside the marks has been scored deeply with adze or ax and is ready to be roughly removed, either by means of the adze or with mallet and chisel until a plane can be used on the bottom of the cut.

A rebate plane may be used next to the walls of the dap and a fore plane or a short jointer is the proper tool for finishing the rest of the surface. At *c,* Fig. 43, the dap is shown half finished, and a tool, *d,* is shown in position for work. This tool is a very useful addition to the millwright's kit and it is worth many a dollar for cutting the wood out of grooves in the bottom of tank staves, the dadoed ends of water tanks, or for similar work. This tool will be described in the next paragraph, and it is only necessary to state here that the long wooden bar is grasped with the hands and pushed back and forth, the little tool slicing off the wood above the depth to which the tool is set, and it follows the grain, dodging around knots or tough places in a most considerate manner until the entire surface has been cleaned off as shown at *e,* all ready for the plane.

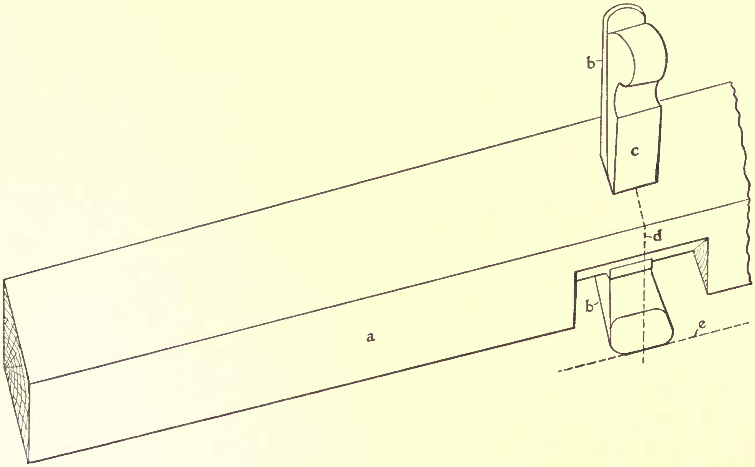

FIG. 44.—"DAPPING" OR "BOXING" TOOL.

This tool, the use of which was noted above, is shown more in detail by Fig. 44. It is usually made of a piece of hard wood, maple, beech or hickory as may be obtainable. A piece about 2x2½ inches answers very well, though the size may be varied to suit the work to be done. The length of the wooden bar must be a little more than twice the length of the longest dap to be made. This is necessary that the bar may at all times have a bearing on the timber adjacent to the ends of the dap, and as the distance from the cutter to either end of the bar must be a little more than the length of the dap, the rule about twice the length of the dap holds good for the length of the bar in all cases.

The tool *b, b* is usually made from ¾ inch square tool steel, and it very closely resembles one of the cutting tools from a Daniels planer. In fact, the writer has, more times than one, used one of these tools for the cutter in a dapping tool, making the bar *a* to fit the planer tool, a hole being mortised through the bar to receive cutter *b, b,* and a wedge *c* made to fit the mortised hole after the cutter has been placed inside it.

The three-cornered hole is cut out of the front of the bar in order to allow room for the chips from the cutting tool. The tool *b* should be located in a certain position relative to the face of the bar, as indicated by the dotted lines *d* and *e*. The former line is drawn square out from the center of the cutting tool to the edge of the bar, thence vertically downward across the face *c* of the bar, and the line in question shall intersect the center of the tool as shown. The dotted line *e* represents the depth to which the tool has been set, and in this case it is one-half inch. The bar when pushed along to a certain line will stand with the cutting edge of tool *b* exactly on that line. In other words, the cutting edge of tool *b* is exactly flush with the front side of bar *c*.

The reason for this particular arrangement is that when using the dap tool there is, when a heavy cut meets the tool, a very strong possibility of the tool rocking about the line *e;* and if the tool were long enough to project beyond line *e,* it would dig into the bottom of the dap every time the bar tipped up. As long as the cutter does not project beyond the face of the bar, there is no possibility of its catching and digging into the work when such a tip-up occurs. As the cutter wears away, it will not reach quite to the line *e,* but the cutter cannot dig into a flat surface when it is back of line *e,* so the shortening of the tool does no harm.

CHAPTER VIII.

WALLS AND MACHINERY SUPPORTS.

The tendency of factory design and construction at present is to carry the shafting upon the timbers of the building. For main shafts, there is no way of supporting them which is better than a line of solid piers built strong enough to carry the shaft and to withstand the pull of belts and the strain of gears. A line of solid wooden posts makes a very desirable hanging for shafting, and beams framed between posts are first-rate for shaft supporting, provided the shaft can be placed on top of the timbers.

DROP HANGERS VS. PILLOW-BLOCKS.

The writer has found, to his sorrow, that drop hangers are not very desirable shaft supports. In fact, though earlier mills built by the writer contained a great many drop hangers, the later designs have seldom contained any hangers whatever —not more than one or two, in places where it was not convenient to locate pillow-blocks. Aside from the tendency of long hangers to sway sidewise, and to vibrate more or less, it appears very unmechanical to the writer to put all the pull of the shaft and its belts upon a bolt where the nature of the pull tends to loosen the hanger instead of to tighten it.

With the drop hanger, everything depends upon the bolt. Not only does the pull of the belts come upon the bolts, but the weight of the shaft and pulleys, and even of the hanger itself, must be carried by two or four little rods as large as the finger. And all this stuff bears upon a few washers which proceed to wear themselves into the timbers upon which they rest the instant the mill is started—and the washers continue to wear into the wood and to have their bolts constantly screwed tighter as long as they stay in commission.

With the ball and socket pillow-block, the weight of shafting, pulleys, and sometimes the pull of the belts, all tend to hold the bearings in place and to help the bolts, instead of at all times working against those indispensable little workers. Even with post hangers the arrangement is fairly neutral, for with the belt pull properly arranged the bolts have little more to do than to hold the hangers to their posts as wedge bearings should in all cases be provided underneath the post hangers in such a manner that even were the bolts to go loose the hangers cannot settle out of place.

When a line of heavy shafting must be carried on a wall or on a line of posts, what appears to the writer as an ideal arrangement for that purpose is to erect brackets upon wall or posts and to provide lugs enough so the brackets cannot settle, even should the bolts go slightly loose. Then place the shaft in self-adjusting pillow-blocks fixed on top of the brackets, and nothing better can be asked as long as the posts or the wall remains rigid and strong enough to carry the load.

SHAFTING ON BIN-SUPPORTS.

In arranging to support a line of shafting upon a wall or a line of wall posts in a wooden building, the millwright should first look the plans over carefully to see whether there are certain posts which are to be subject to an intermittent load. In some mills, there are storage bins or floors where stock is placed upon receipt and is removed as required. Such posts or timbers as support the bins or floors are very poor things upon which to place shafting.

All material is more or less elastic, even glass; and wood is especially endowed with elasticity and yields to pressure, and if not loaded beyond its elastic limit springs back again when the pressure is removed by the unloading of bin or storage floor. Shafting attached to such timbers can never be made to stay straight. When the load is on, the timbers are sprung out of line and carry the bearings with them. When the load is removed, the bearings take another position, the shaft usually goes with the bearings, and much lost power is the result. Whenever a line of posts is met with which are subjected to loading as above, the millwright should seek other supports for the shafting. Put in separate posts to carry the shafting, placing them as best they can be placed, and if possible, put in independent foundations for the shaft-supporting timbers, thereby saving much future trouble in the way of leveling and alining the shafting.

WALLS FOR SUPPORTING SHAFTING.

When shafting can be attached to well built masonry walls, there is usually little danger of distortion by the springing of the wall, provided the masonry is well constructed and the foundation ample for the maximum load to be carried. In case masonry does yield to pressure of the loaded space supported by it, there will be little return to the original position after the load has been removed. That is, while the timber construction springs back, the masonry stays where the load left it and after the foundations have settled to their ultimate bearing position, the loading and unloading of a masonry wall has very little effect upon it, hence the desirability of masonry for shaft supports.

A-PIERS FOR LONG SHAFTS.

When shafts must be supported to pass long spans, where there is nothing but the weight of the shaft to be carried, no pulleys or gears to cause side-pull, then the simple A-frame is ample for carrying the shaft. Such a frame is shown by Fig. 45, two timbers, ranging from 6x6 inches to 12x12 inches being used, according to the size of the shaft and the hight at which it must be supported above the ground. In the engraving, the timbers *a* and *b* are bored at the bottom to receive pieces of steam pipe which serve as dowels to prevent lateral movement. A third bit of timber, *c,* is framed across the two inclined timbers as shown, and this short piece receives the bearing which supports shaft *e.*

A ⅞-inch bolt, *d,* is placed as shown through both vertical timbers below *c* to hold the framing together at the head. This arrangement is for a pillow-block with four holding-down bolts. When there are but two bolts, one in either end of the pillow-block, put in two ⅝-inch bolts instead of one ⅞-inch, and there will be no interference with the bolts or their heads underneath block *c.* Bracing is put on the frame as shown, using 2x6-inch stuff, and some ladder cleats and a platform are also provided, the latter being made by extending one of the climbing cleats, which was made very heavy, placing a similar cleat on timber *a,* and connecting the cleats by a couple of planks. In erecting this frame, there is not a spike in it except where timber *c* is toe-spiked to *a* and *b* to prevent lateral sliding. The fastenings to the climbing cleats and the braces and stays are all ½x4½-inch lag-screws

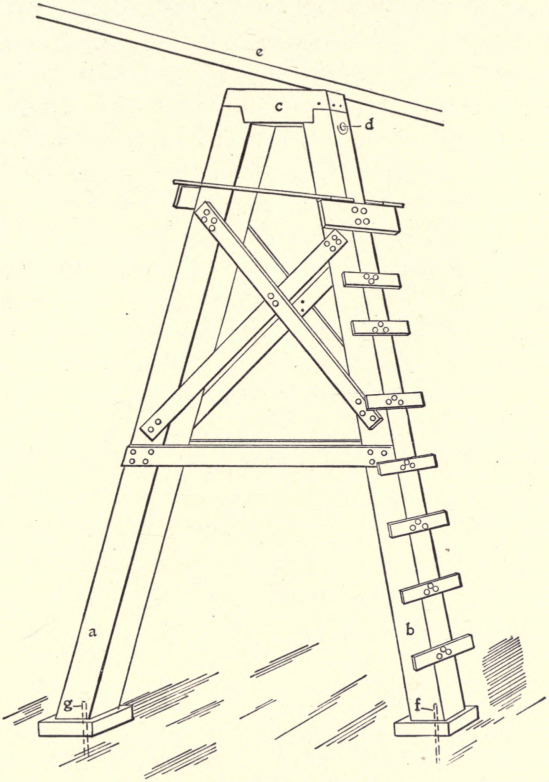

FIG. 45.—A-FRAME SHAFT PIER.

with rolled threads. Washers are placed under the heads, and the screws set up tight—and kept tight by occasional going over and screwing up. Wood will shrink, and screws need occasional tightening, especially with new timber.

ERECTING AN A-FRAME PIER.

It is the custom of the writer, when an A-frame pier must be set up, to build the thing on the ground and to set it up afterward. If the shaft is already in place, the problem is an easy one, all that is necessary being to set a "shore" under the shaft, attach a rope or chain tackle close to the shore, and pull the top of the pier into position, with the braces, stays, working platform, climbing cleats and dowels all in position. Once erected, the bearing is bolted to the shaft, it having been already in place on timber *c;* then the pier is blocked up under the stays, and concrete is run into the foundation holes around the pipe dowels. By placing the bearing square with the frame and adjusting that so the shaft hangs fair in the bearing, no other adjustments are needed and the pier will be in correct position after the cement hardens and the props are removed provided care is taken to have the shaft in good alinement and perfectly level before the concrete is poured and rammed. A set-collar on either side of the pillow-block holds the A-frame from moving sidewise or lengthwise of the shaft which virtually supports the A-frame axially.

Proportioning Bolts and Rods.

In describing the method of bolting the head of the A-frame pier it was stated that one ⅞-inch or two ⅝-inch bolts would do the work. A very convenient method of determining the number of bolts or rods which will be equal in strength to one or more bolts of a different diameter is as follows:

"Square the diameter of the rod, divide or multiply by the number of rods to be substituted and find the square root of the result."

In the case given above a ⅞-inch bolt was to be replaced by two smaller bolts, but which possessed equal strength. The operation is as follows:

$7/8 \times 7/8 = \frac{49}{64} \div 2 = \frac{25}{64}$ nearly. The square root of $\frac{25}{64} = 5/8$, the required diameter.

Supposing it was necessary to replace a 1-inch bolt with two smaller ones, then: $8/8 \times 8/8 = \frac{64}{64} \div 2 = \frac{32}{64}$, and the square root of $\frac{32}{64} = 6/8 = 3/4$, nearer than any other regular size of iron. The exact diameter of bolt would be $\frac{5.656}{8}$ inches $= 0.707$ inches, instead of 0.75, as called for by the nearest diameter of stock bolts. This matter is graphically shown by Fig. 46, in which the circle *b* represents the cross-sectional area of a bolt 1 inch in diameter. The dotted square *a* is to represent the area derived from multiplying the diameter by itself—squaring it—or one square inch. In dividing by 2, to obtain one-half the total area, the sectioned, or hatched portion *c* is taken, and carried to *d*, where a rectangle, 1x½ inch is shown, hatched as before.

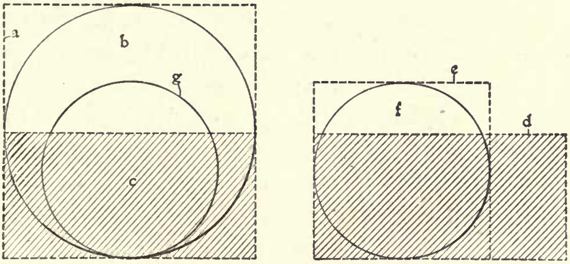

FIG. 46.—PROPORTIONING BOLTS.

The shaded section, *d*, represents the area 1x½ inch, or $\frac{32}{64}$ square inch. In order to get this area into the form of a square, its root is extracted, giving the square area $e=0.707$ inch on each side, and the inscribed circle *f* represents the size of a bolt one-half the size of the 1-inch bolt. For comparison, the circle *f* is laid down at *g*, inside the 1-inch diameter. When it is desired to ascertain the size of one or more bolts to equal the strength of several smaller bolts, then the process is reversed. For instance: What diameter of bolts must be used, in place of ½-inch bolts, in order that two bolts may be equal in strength to six ½-inch bolts? $\frac{1}{2}\times\frac{1}{2}=\frac{1}{4}\times 6=\frac{6}{4}$, the square root of $\frac{6}{4}\div 2=\sqrt{\frac{3}{4}}=\sqrt{\frac{48}{64}}=\frac{7}{8}$ inch nearly. Or, two ⅞-inch bolts will do the work.

One point which will be neglected in all these calculations is the fact that the smaller the rod, the greater the strength to the square inch of cross section. This may be noted in the table (II) giving the strength of Ransome bars. While bolts may be taken as having a strength of about 60,000 pounds to the square inch of cross section, the same steel, when drawn into wire, will be found to possess a strength about double that figure, often running up to 125,000 to 128,000 pounds to the square inch. But this point, as stated, is neglected in the calculations. It is mentioned that the millwright may have some understanding of why small rods and wire seem stronger than larger sections. They are stronger and will carry more load safely.

Rolled-Thread Lag-Screws.

It was stated in connection with the A-frame pier that rolled-thread lag-screws were particularly desirable and should be used in preference to those having the thread cut in the usual manner. Fig. 47 represents the two forms of lag-screws, and it will be noted that in sketch *A* the body of the screw maintains its size the entire length of the screw, both in shank and in the thread. This is the rolled-thread type. Besides possessing more strength than the old form of lag-screw, it has the advantage that only one bit is necessary for applying this lag-screw, while the old-fashioned form of lag-screw, shown by *B*, must have two bits, one for the shank, the other for the threaded portion, in order to get it into place.

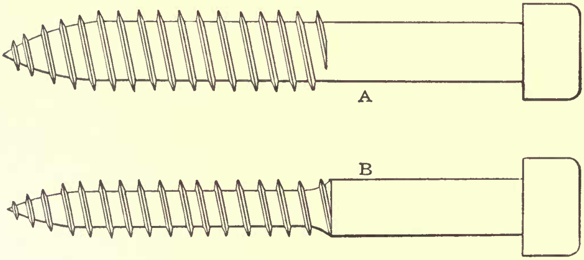

FIG. 47.—ROLLED-THREAD LAG-SCREWS.

These lag-screws are so proportioned that they weigh about the same, though the new form, *A*, appears to be the heavier. To prevent this, the shank or body of lag-screw *A* is rolled a trifle smaller than its nominal size—just enough smaller so that it will follow the bit of that size. Thus instead of having to use a body bit of 17/32 or 9/16 inch, the size of the body is made just small enough so that it will slide through a ½-inch hole. Probably the shank is a little more than 15/32 inch in diameter. The great objection to this form of lag-screw is that a much larger washer is required, a ⅝-inch washer being necessary unless the millwright is willing to screw the entire length of thread through the washer, in which case the ordinary ½-inch size may be used.

Floors and Flooring.

Beyond all doubt the slow-burning mill construction floor is the best yet devised for general factory use, owing to the fact that machinery can be located anywhere it is desired to place it without having to reinforce the floor under which the machines stand. This of course does not apply to excessively heavy machines which require a special foundation of their own.

There must, however, be one exception to the slow-burning floor type, for undoubtedly the floor built of reinforced concrete stands over everything else in the floor line for the placing of machinery. The millwright is confronted with entirely new conditions when he is called upon to erect machinery and to hang shafting upon concrete walls and floors, and methods of working the new conditions will be discussed elsewhere in this book.

Laying "Slow-Burning" Flooring.

The methods of laying flooring vary so greatly according to the material used that it would require a volume to give full instructions concerning that part of mill construction, consequently the description of any floor construction that can be given here must be very brief indeed. With heavy plank floors, such as those for slow burning construction, it is best to lay one plank at a time, running the pieces one after another the entire length of the building, and breaking joints. Each plank should be squeezed tightly against the finished portion of the floor on every beam, and the proper fastenings put in before the leverage is removed.

A number of types of floor clamps are in the market, and it will pay to secure two or more of these clamps and use them instead of nailing on cleats or ledgers at every beam for each plank in order to provide a bearing for the wedges or levers with which the planks are forced into place.

Laying 1- and 2-inch Floors.

When common ⅞-inch, random width flooring is to be laid, the workman usually fits a section six or seven feet wide and of any length which the boards will reach. Then the outer board is moved inwards from 3/8 to 1/2 inch and fastened by a few nails driven partly in, as shown at *b, b,* Fig. 48. In placing the flooring for this operation, the boards are all laid side by side as closely as possible, the marks *a, a* made on the floor beams, then the middle pair of boards *c, d* are removed and the outer boards moved back from the marks *a, a* the required distance, and fastened temporarily as noted. Some mechanics drive the nails home, but it is better to leave the nails so they may be drawn in case more or less crowding is necessary for the section of flooring. The boards *c, d* being placed as shown, one or two pieces of board, *e,* are thrown crosswise of the section, and with a man or two on each cross-board, boards *c* and *d* are forced down into place. The "knuckle-joint" action of the boards in question results in placing a considerable strain upon the boards and squeezing them into place as closely as if they had been clamped with the most improved appliances in the market.

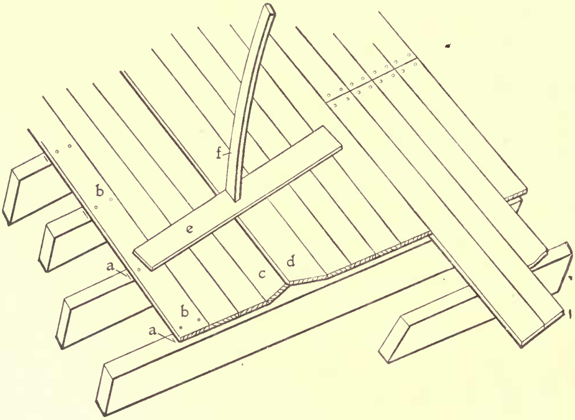

FIG. 48.—LAYING 7/8-INCH FLOORING.

Springing 2-inch Planks into Place.

Sometimes 2-inch plank are handled in the manner described above, but it is hard work and requires more men to force the tilted planks down into place. When the boards or planks go down hard, a piece of 2x4-inch scantling may be made to help a great deal by cutting such a piece in between any convenient overhead support, and the board *e,* as shown at *f.* By pulling against *f*, about in the middle of its length, it can be forced into place with the ends vertically above one another, and when the pressure is released at the middle of the scantling, its elasticity will cause it to straighten out with great force, pressing down the boards with many hundred pounds pressure and holding all the gain obtained by the workmen pressing on board *e*. This arrangement is very useful, particularly when forcing a heavy plank floor into place.

Laying Tongued and Grooved Flooring.

The method shown by Fig. 48 can be used to a certain extent with tongued and grooved flooring, but the results are not very satisfactory and there is great danger of breaking off the upper edge of the grooved side as all the pressure comes upon the thin portion of the flooring strips, especially in the pieces *c*, *d*, and those adjacent to them on either side. When tongued and grooved flooring is to be handled, it is better to run it in one strip at a time the entire length of the building, in the manner described for slow-burning floors, except that the clamps will be unnecessary, the strips which are quite narrow being pressed against the body of the floor with a common chisel, the end of which is driven into the floor beam. Pressure is given at each nailing which is "blind," and the results of this method are excellent, provided the flooring is all gotten out to the same width.

Wood Floors on Concrete Construction.

Skin floors ⅞-inch thick are frequently placed upon reinforced concrete construction in the manner described above. Usually the skin floors are fastened to 2-inch pieces put the proper distance apart for nailing strips, and filled in between with cinder concrete, made about 1, 2, 3. The wooden nailing strips are sometimes called "screeds" and are usually made wider at the bottom than on top so as to dovetail into the cinder concrete.

Hanging Shafting to Concrete Work.

When concrete construction is designed for supporting shafting, the necessary attachments for shaft hangers may be easily provided, but when shafting is to be placed in a building already constructed, then the problem is much more difficult and is of an entirely different nature. Two methods are shown by the following engravings, and either may be adapted to his needs by the millwright as the conditions may demand.

Fig. 49 illustrates one method of hanging shafting when planned for at the time the building is erected. It will be noted that I-beams are placed in position to receive the journal bearings, and that the I-beams are bolted to the concrete work. Several methods may be followed for fastening the beams, the method shown at *a, b, c* being the placing of three bolts in the forms when the concrete is rammed, the upper end of each bolt having been turned over as shown at *m,* thus arranging for a firm hold against the concrete. Sometimes ordinary bolts are used and cast washers are put on, forming, in fact, inverted anchor bolts.

If desired, an inverted U-Bolt may be used and placed as at *d, e,* the upper end of the U passing over and through the floor beam *n,* which sustains the weight of the I-beams and shaft at that end of the transmission. At another place it may be convenient to hang the I-beams directly against the floor-beams, instead of under the girder-beams. In this case it may be profitable to put in three "sky" bolts (they may thus be designated to distinguish them from anchor bolts), as shown at *f,* and attach the I-beams by means of the block and clips shown at *f.* Again, as at *g,* it may be convenient to build one end of the I-beams directly into the wall and secure them in that manner.

Wall Hangers and Brackets.

As stated elsewhere, drop hangers do not fully fill the bill for hangings of heavy shafting, and where the shaft can be placed near a wall, or against piers, the method shown at *h* may be found convenient. As many wall brackets are provided, as shown at *i,* as may be necessary to carry the shaft. In the engraving, the bracket is shown directly under one of the girder-beams so as to take advantage of the heavy concrete in the wall at that point. The curtain walls may be heavy enough to carry wall brackets, but when they can be placed in line with the heavy construction it should be done. The brackets should each have a projection cast upon them to enter the cavity *l,* which is cored out of the wall to receive the projecting lug. This will prevent all settling or sliding of the bracket should the nuts work loose on the bolts *j, k, l,* which are built into the wall in much the same manner as described for the "sky" bolts. The bracket shown bolted in place at *i* is made with a cored top in order that the pillow-block may be slipped into position and held in place by means of T-head bolts.

In all applications of shaft bearings to concrete walls and floors (and to brickwork too, for that matter), the writer is very strongly in favor of placing an elastic member somewhere in the carrying mechanism between shaft and concrete. A piece of wood from ½ to 2 inches thick, placed between the pillow-block and the bracket or steel supports, will cause the machinery to run with less vibration. It seems to absorb many of the little shocks and jars, and the nuts do not come off nearly as frequently when there is a piece of wood in the connections as they do when the bearings are screwed solid, iron to steel.

Methods of Fastening I-Beams.

It may be seen at *a, b, c* that a single flat piece of iron is used for fastening the I-beams against the concrete girder-beams. At *e* it will be noted that the I-beams are supported by two short pieces of channel shape, which are in turn riveted to the I-beams. At *f* a shoe is used which may be fastened to the I-beams either by small bolts tapped through the flanges of the beam and into the shoe, or, as shown in Fig. 49, clips may be used which are forced by the bolts firmly against the I-beams, clamping them as in a vise. In one instance, at least, the writer has seen castings used for this purpose which closely resembled the old-fashioned "chairs" used under steam railroad rails before fish plates were used. The chairs were tightened against the I-beams by driving a wedge which clamped the beam fast to the chair.

Hanging Shafting to Old Reinforced Concrete.

The examples given above refer mostly to new work, when the necessary bolts and fastening may be put in place during the construction of the building. There are, however, many instances where it is necessary to put up shafts upon old concrete work, either in making changes or for shafting in buildings not originally intended for mill use.

In cases of this kind it is necessary to make the best of it, and to get out of the work with as little labor as possible consistent with safety, good work and the desired results. The hangers must be bolted to the concrete beams, and bolts must have holes; furthermore, it is no fun drilling holes through concrete, to say nothing of reinforced concrete. Supposing holes were started down through beam-girder *m*, for a bolt *a*, *b* or *c*. In case of old work, nobody knows exactly the position of the stress rods *p*, and the drill is liable to come plump upon one of those pieces of reinforcing; therefore it is best to use the method shown at *d*, Fig. 49, avoid the beams and the girders, and drill through the floor only, and obtain the necessary holding strength for the bolts by straddling one of the beams or one of the girder-beams.

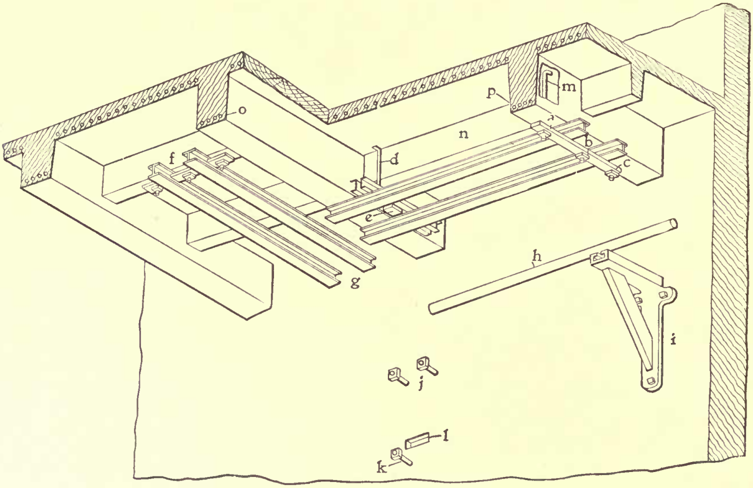

FIG. 49.—HANGING SHAFTING ON REINFORCED CONCRETE.

Beams and Girders.

Lest there be a misunderstanding regarding the use of the terms "beam" and "girder," it will here be stated that by "beam" is to be understood that portion of the framing, either in wood, steel or concrete, which carries the floor, or would carry a floor were one to be put in. Thus, in Fig. 49, the portion of the framing represented by *n* is a beam pure and simple. The large timbers, *m* and *o,* are beams in one sense of the word, inasmuch as they carry some of the floor directly. Were these timbers to be dropped beneath the regular floor beams, so that *n* and the rest of that class of beams were carried on top of *m* and *o,* then those timbers would be "girders," and so designated. In the form of construction shown by Fig. 49, the timbers in question do the work of both girders and beams, hence the title applied to them "beam-girders."

A YOKE-CLAMP.

The device shown by Fig. 50 has been used by the writer a number of times when erecting shafting in an old building of reinforced concrete. Two holes are first made through the floor, they are laid out to straddle both the beam and the I-beams, as at *a* and *b*. The U-strap *c* is made of flat iron (soft steel, there is no iron nowadays unless it is made to order) about ½x2 to ¾x3 inches, according to the load to be carried. The ends of the strap are drawn out and threaded for nuts. If there are bolt-ends at hand, it will pay to weld some to the flat iron, instead of drawing it down and threading, as shown at *d*.

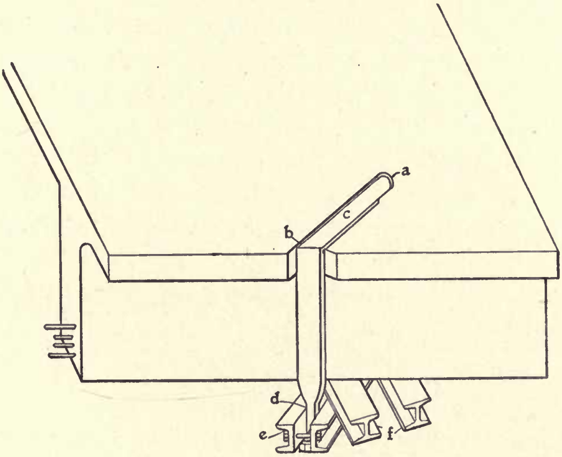

FIG. 50.—A YOKE-CLAMP.

The yoke *e* is made from two pieces of channel, a couple of holes are drilled through each and bolts put through as shown; then the I-beams *f* are put in position and the nuts on the straps are run up until there is only about one inch play between the I-beams and the floor-beams, It will be noted that the strap has been cut into the concrete floor at *c*. This may not be necessary in some instances, and where there is no necessity for a smooth floor, the cutting-in may be omitted.

But whether the strap is cut in or left on top of the floor the procedure is the same. After the nuts have been set up within an inch, as directed, push strap *c* up as far as it will go, holding it by a bit of board placed under one of the threaded ends, and let one man hold the strap thus while another man dashes some freshly mixed and quite thin cement mortar into the channel cut in the floor for *c*. The mortar should be either neat cement or made with very fine sand, and as soon as it has been thrown in under the strap—the concrete surface having been thoroughly wet first—the strap is dropped into place and the nuts quickly screwed up tight. The cement will be forced from under the strap until the metal has obtained a good and solid bearing along the entire width of the floor-beam. The holes in the floor are then flushed with the rich mortar, which is smoothed off where-ever it protrudes from the concrete surface, and when the cement has set there will be one shaft bearing which will never get loose through shrinkage of wood. Some thin cement may be placed between the I-beams and the bottom of the concrete with good results, and the screwing up of the nuts will force out all of that mortar which is not necessary to give a perfect bearing to the I-beams.

ERECTING WALL BRACKETS.

Wall brackets placed on old or finished new concrete must have the holes drilled through the wall. There is no get-away from that operation. It does not pay to put in expansion bolts for holding shaft timbering. A good expansion bolt *may* hold, but the millwright does not know whether it will or not. He does know that there is a chance for expansion bolts to fail, therefore he will not risk having a shaft come down by using doubtful holding power.

The opinion of some authorities regarding the holding power of expansion bolts is exemplified by the building laws of some large cities—New York, for example. The building rules regarding landings for fire escapes specify the use of through-bolts, and especially forbid the use of expansion bolts for holding such landings in place against the sides of buildings. While expansion bolts may and do hold, it will not pay to run the risk. It is better to put in the reliable through-bolt and secure absolute safety.

Drilling Holes in Concrete.

Concrete is pretty hard stuff to drill at best—provided it is properly made—and the drills should not be made with too hard a cutting edge or they will break badly. Use a rather soft drill, and harden a little more if necessary as the cutting proceeds.

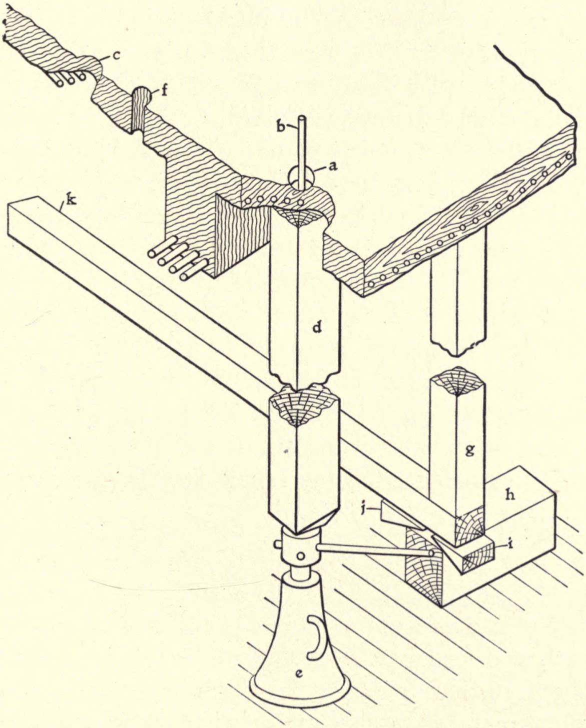

FIG. 51.—DRILLING HOLES IN CONCRETE.

Just as small and as short a drill should be used as will suffice to make the hole large and long enough for the purpose. For the first portion of a hole it makes little difference what sort of a drill is used, as the concrete is abundantly able to withstand the strain, but when the hole is about breaking through the concrete, then is the time that the small light drill counts heavily.

Fig. 51 illustrates the effect of drilling with heavy and with light drills. The hole *a* may be started with a drill which will give a hole 2 inches or more in diameter as desired, but if no precautions are taken the resulting hole will appear about as represented at *c*, the lower edge of the concrete being broken or flaked off sometimes as much as 10 inches in diameter. Although this may be repaired, it takes time for the new concrete to harden and it does not make as good looking a job as where there is a clean-cut hole right through the concrete, as shown at *f*.

To obtain such holes, start them with a full-sized drill as at *a* and when partly through the concrete change to the small light drill *b* and work through the rest of the concrete. A piece of timber placed underneath where the hole is to be made and set up solid by means of a jack-screw or a lever, as shown at *d*, will prevent a good deal of the chipping or breaking off of the concrete, when the drill breaks through the lower surface. If a jack-screw is not at hand, use the "rocking-horse" method of leverage, as illustrated at *g*, where that timber is placed underneath the spot where the hole is to come through the concrete.

"ROCKING-HORSE" SUBSTITUTE FOR JACK-SCREW.

The block *h* is placed in position as shown, the level-timber *k* put in place and the far end raised to enable wedge *j* to be inserted between the timber and the block. The lever-end of the timber *k* is then depressed as far as it will go, or until it strikes the ground, and wedge *i* is inserted. Timber *k* is again raised and wedge *j* pushed or driven in as far as it will go, then the operation is repeated at wedge *i* again. After two or three turns at forcing each of the wedges, the timber *g* will be pretty snug against the floor above, and the drilling may be proceeded with.

After the small drill has been put through the concrete, the hole may be enlarged very readily with the larger drill and without much danger of spalling the under side of the hole. It is well, however, to keep the supporting timber in place until the large drill has been made to do its work.

When drilling holes through walls, the same precautions should be observed and the smaller drill used unless there is a way of laying out the hole accurately of both sides of the wall so that drilling may be done partly through from either side of the wall. The timber may be removed after the small drill has pierced the wall and the larger drill used from the opposite side of the wall from which the hole was started.

SHAFT-SUPPORTING PIERS.

Piers for supporting a line of shafting, be they brick, stone, concrete or wood, must be designed and constructed to carry the weight and other strains likely to come upon the piers in question. Given a shaft 34 feet long, say 3 15/16 inches in diameter, with pulleys scattered along the length as required to drive the several machines, and it is evident that some of the piers must withstand a severe pull while other of the piers under the same shaft have little to carry except the weight of the shaft and its load of material. The pull on some of the piers is in one direction or the other as the belts happen to lead off, and it stands to reason that the piers need to be designed to carry, or to withstand, the various weights and strains to which they are severally subject.

It is necessary, therefore, that each pier be designed for its own particular work, and to build all these piers of the same size and weight, irrespective of the load and kind of load which each is to carry, is very poor engineering and poor millwrighting, too. Let Fig. 52 represent the plan of a line of shafting upon which the sizes of the various pulleys are given, their location, and the diameter of each pulley, together with the width of each belt. As noted, the shaft is located six feet above the floor line, and it is required to ascertain the size, shape and construction of the several piers, including one timber trestle, as laid down upon the drawing in Fig. 52.

Calculating the Belt Pull.

Before the necessary piers can be calculated, the belt strains must all be calculated and the weights of the shafts and pulleys must be known in order to determine the dead and live loads upon each pier or foundation. In Fig. 52 the bearings and, of course, the piers are designated as I, II, III, V and VI. The pulleys are as follows: Engine pulley *A*, 72x21 inches carrying a 20-inch double leather belt from the engine. Pulley *B* is 46x15 inches and stands up under the pull of a 14-inch Gandy belt. Pulley *C* is 36x13 inches and carries a 12-inch Gandy belt, while pulley *D* is 48x15 inches, and is also fitted with a Gandy belt 14 inches wide.

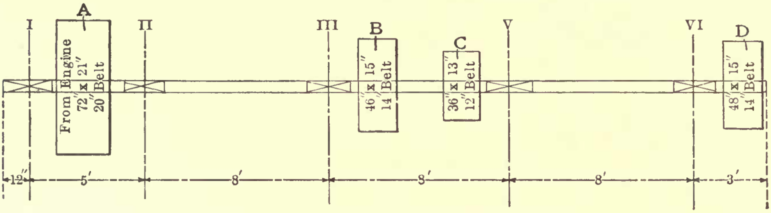

FIG. 52.—SHAFT-SUPPORTING PIERS.

It is not known how much power is transmitted through the several belts and nobody cares as far as the pier calculations are concerned, for the proper way is to calculate the piers for the full power which the belt can transmit without slipping on the pulleys. Here we come to one of the open questions in millwrighting, a question which has been discussed since the first belt was started and which will be discussed until the direct connected electric motor has driven the last belt out of business. Every man must work out the problem for himself in the light of his own environment and conditions.

Working Power of Belts.

The writer has, for the past three years, adopted a rule which, though it may be a trifle expensive in first cost, has proved very economical in maintenance charges and which has resulted in slipping belts being entirely unknown in every factory constructed according to the rule in question, which is:

"Never load a belt more than 40 pounds pull to the inch of its width."

This rule is applied alike to all belts—leather, rubber, Gandy or plain stitched cotton, and by the way, there are so many varieties of the "Original Gandy" belt in the market that this excellent material should always be specified as "impregnated stitched cotton belting," which will permit the use of any make of that kind of belt which may pass the specifications, a discussion of which will be found in its proper place.

But belts are sometimes caught, wound up around the shafts or on the pulleys, and broken in that manner; therefore it is necessary that the shafting be erected upon something solid enough to withstand the breaking of any one of the belts. It is not likely that all the belts will catch and break at the same time, hence the piers calculated with strength sufficient to withstand the strain of the belt located the nearest to that pier (the strain when the belt breaks) will be considered amply strong to stand any strain likely to ever come upon the pier in question. The breaking strength of leather varies from 1500 pounds to 3000 pounds tensile strength. As a belt is always weakened somewhat by the joining together of the several pieces composing it, 2500 pounds to the square inch will be assumed to be the average breaking strength of leather belts. The thickness of belt leather is about 0.16 inch, or there are 6¼ thicknesses to the inch, giving a strain of 2500÷6.25=400 pounds pull to the

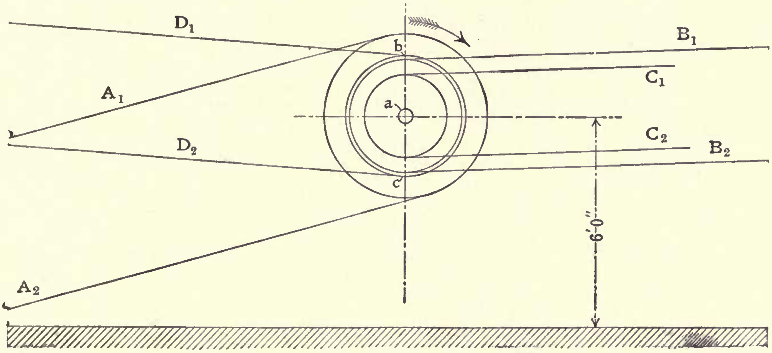

FIG. 53.—BELT PULL ON SHAFT-SUPPORTING PIERS.

inch of belt width necessary to break it. Giving a factor of safety of 10 brings the working capacity of the belt down to 40 pounds, mentioned above as being particularly desirable.

It having been assumed that there will not be more than 400 pounds to the inch of width pull on the belt at any time, a clue is given to the strength of foundation necessary to withstand the belt pull. Referring to Fig. 53, it will be noted that the strain on pier VI, for instance, is brought to it through two folds of belt D_1, and D_2, either of which may be loaded to 400 pounds to the inch of width. But as the shaft is running in the direction indicated by the arrow, the upper fold D_1, must take the 400-pound strain when the belt catches and breaks; therefore we will neglect the pull on fold of belt D_2, and calculate only for 400 pounds to the inch of width on belt D_1.

Pull on Working and on Idle Folds of a Belt.

When the belt on pulley *D* is working it is under a certain strain, due to the weight of the belt and the tightness with which the belt is placed on the pulleys. Be that strain what it may, the pulley *D* is under no more strain when it is working than when the pulley is at rest. The 40 pounds working pull allowed in any belt is only the difference in strain between sides D_1 and D_2 when the belt is working. The total strain in the belt upon the pulley and the shaft is the same whether the belt is working or is standing still. That is: the strains in the working and idle folds of any belt will, if added together, be found to be the same whether the belt is working to its full capacity or is standing still. But as D_1 is the working fold of that belt, there is more strain upon the shaft when this belt is working than when it is idle, for the reason that the strain on D_2 is diminished by the same number of pounds that D_1 is increased, thus making $14 \times 40 = 560$ pounds more pull at *b* than there is at *c*. As the leverage of point *b* is 4 feet greater than the leverage of point *c*, it will be noted that there has been a change in the leverage exerted to tip over the pier.

But as it has been decided to calculate the pier to withstand a force of 400 pounds to each inch width of belt exerted at *a*, Fig. 53, to tip over pier VI, Fig. 52, we need only consider that force of $400 \times 14 = 5600$ pounds as exerted horizontally at *a*, 6 feet from the surface of the ground. Should it be necessary to go to a depth of 4 feet to secure suitable bearing soil for the bottom of the pier, it becomes the fact that the 5600 pounds is exerted through a lever 6+4=10 feet. The force applied at the end of any lever, multiplied by the length of that lever, reduces the leverage to a length of 1 foot, and it is called the "moment" of that force. Thus the moment of the force 5600 at the end of a 12-foot lever is 12×5600=67,200. In other words, if the foundation were 1 foot long, it must be made to weigh 67,200 pounds in order to balance against being tipped over by the belt pull 10 feet above.

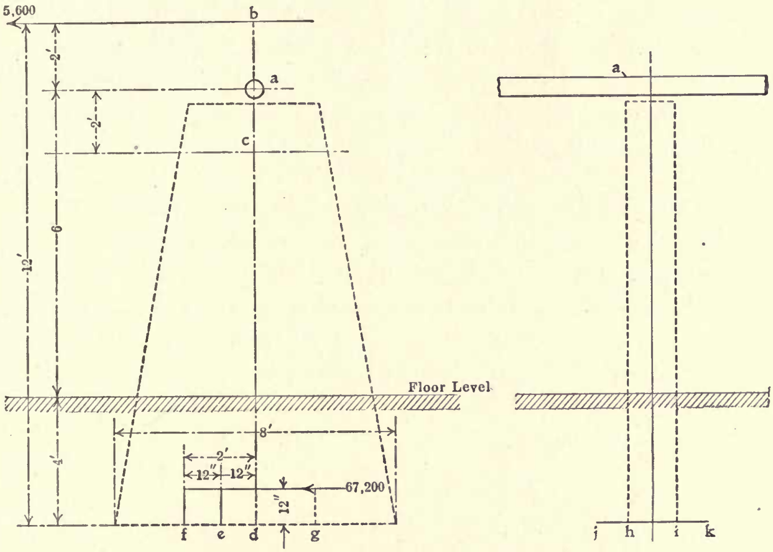

FIG. 54.—CALCULATING WEIGHT NECESSARY IN A PIER.

According to the figures found as above and shown by Fig. 54, the foundation, if made 2 feet long from *d* to *f*, would have to weigh only 33,600 pounds, provided the weight could all be applied at point *d*, which is impossible as the weight of the foundation is evenly distributed all the way to *f*—two feet distant, therefore, while the full holding-down power of a pound weight at *d* would be realized in preventing the foundation from tipping around the point *f*, a pound weight at that point (*f*) would have no holding-down power whatever as it rests upon the ground at the point of turning, or the fulcrum of the levers. Therefore the full holding power of a foundation 2 feet long would be only one-half the amount it appears to have, and the foundation must be 2 feet long and weigh 67,200 pounds instead of 33,600 pounds as above noted. While the above may not be exactly true in a scientific way, it is close enough for our purpose of roughly calculating a shafting pier. Thus, were the pier made 4 feet long, it need have only a weight of 33,600 pounds in order to keep the belt pull at *b* from tipping over pier VI by rocking it upon one edge of the foundation. The foundation being increased in length to *g* becomes 4 feet in a direction crosswise of the shaft. Lengthwise of the shaft it makes no difference how far the pier extends as long as the masonry is strong enough so that it does not break apart. Therefore the pier foundation may be made as wide as from *h* to *i* (Fig. 54) or it may extend from *j* to *k* as may be found necessary to give the pier stability and to secure a footing large enough to suit the carrying quality of the soil upon which the pier is to erected.

The weight of the material ranges from about 140 pounds to the cubic foot for brick masonry to 150 or 160 pounds for concrete. Taking the figure for brick, 140 pounds to the cubic foot, it will require 33,660÷140=240 cubic feet of masonry, not counting the weight of the shaft which is somewhere near as follows:

7-foot shaft, 3 15/16 inches	288	pounds.
13 15/16-inch pillow-block	100	"
4 bolts	25	"
1 pulley, 48x15 inches.................	550	"
30 feet of 14-inch x 6-ply impregnated s.c. belt	140	"
Total weight	1103	pounds.

The effect of subtracting 1103 pounds from the total necessary load of 33,600 pounds leaves 23,497 pounds of masonry necessary, amounting to about 231 cubic feet. As the pier is to be 10 feet high, it is obvious that the cross-sectional area must be 231÷10=23.1 (slide rule calculations) and if the pier is to be made 4 feet long its width must be about 5 feet 10 inches, or wider than it is long.

It is obvious that the above noted dimensions are not very suitable for the pier in question and that the length should be increased while the width is diminished. Should the length be increased to 8 feet the turning resistance is doubled, and there is necessary only 16,800 in load instead of 33,600. But the shaft and pulley weight must be deducted from the above, leaving 16,800—1103=15,697 pounds of masonry required. At 140 pounds to the foot, this requires about 112 cubic feet. Should the length of pier be made 8 feet at the bottom and 4 feet at the top, then there would be an average of 6 feet in length, a surface of 60 square feet area. As the cubic contents of the pier must be 112 feet, the width is found to be 112÷60, or almost 2 feet (1 foot, 10½ inches nearly) and the pier should be made 2 feet wide. There is nearly 3½ cubic yards of masonry in the pier, and this would cost in brick from $10 to $20 a yard. If built of concrete, the pier would cost from $4 to $10 a cubic yard.

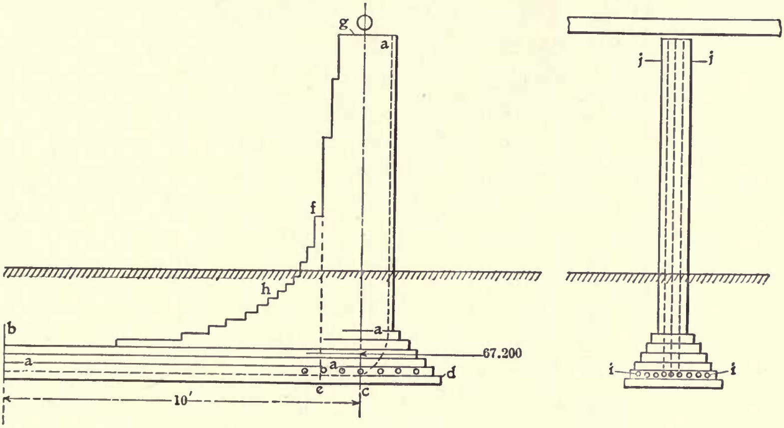

FIG. 55.—ECONOMY OF MATERIAL BY USING REINFORCED CONCRETE.

The area of the pier on the bottom is 8×2=16 square feet, and as the load is only a little more than 8 tons it will be seen that the load is only about one-half a ton to the square foot, so that the pier would be safe in almost any kind of soil without any extension whatever in the shape of a footing. The outline of the pier, both side and end elevation, is shown by the dotted lines in Fig. 54.

Should it be found necessary to economize in material, the millwright may construct a pier as shown by Fig. 55, where the quantity of masonry is reduced from 112 to 6 cubic feet. In this form of construction, the bearing for the 67,200-pound thrust moment 12 inches above the bottom of the foundation is carried 10 feet away toward *b,* and instead of having been able to divide the thrust moment by 4, as in Fig. 54, we are now able to divide it directly by 10, the footing at *b* and intermediate between *b* and *c* being sufficient to absorb the pressure.

The division by 10 allows the belt pull to be balanced by a masonry load of 6720 pounds, and deducting the shaft-load of 1103 pounds there remains only 5617 pounds weight of masonry necessary, or a trifle more than 40 cubic feet for the pillar *g, e.* Dividing 40 by 10 gives 4 square feet as the cross-section area of the pillar (it can hardly be called a pier now), which would correspond to its being 4 feet long and 12 inches thick or wide. This does not take into account the brace which is run off toward *b,* more than one-half of which, in weight, is accountable as being attached to *g, c,* thereby increasing the resistance of the pier to a great extent which has been made no account of whatever in the calculations, but which would decrease materially the number of cubic feet of masonry necessary in the pillar *g, c.* There is also the holding power of the soil on top of *b, h,* which is considerable and may be taken into account if necessary; but this pier is already as small as could be safely constructed, and the soil load is neglected. To give the necessary strength of pier to enable it to withstand the transverse (breaking) strain of the belt pull, some steel reinforcing bars are put in as shown at *a, a, a, a.* The strength of steel necessary at any point between *b* and *c* may be found by considering its distance from *c* as the length of a lever which is to be divided into the moment—67,200. Thus at a point 6 feet from *c,* toward *b,* the load will be $67{,}200 \div 6 = 11{,}200$ pounds, which may be considered at transverse strain tending to break the brace foundation at a point 6 feet from *c.*

Calculating the Steel Reinforcing.

Should the transverse strain be divided by the thickness of the footing at the point of load, it will be very close to the tensile strain tending to pull in two the lower side of the foundation; therefore it is safe to provide reinforcing capable of carrying a tensile strain of 11,200 pounds. Should it be determined to use Ransome bars, their size and number may be calculated from the data given on page 88, chapter VII; but if ordinary round steel is to be used, it is safe to use the boiler inspector's rule for braces and allow 5000 pounds pull on each round brace 1 inch in diameter. This amounts to nearly 6350 pounds to the square inch of section, a factor of safety of about 10.

Thus there will be required 11,200÷5,000=2.2 rods 1 inch in diameter. As it was found on page 119 that one rod 1 inch in diameter was equal to four ½-inch rods, it may be considered safe to place nine ½-inch rods in the footing as shown at *i, i.* According to calculation, more rods would be required nearer to *c* but for the bracing *h,* which is run up as shown for the purpose of increasing the depth leverage of the footing, thereby making the tension less in the reinforcing rods.

The amount of steel necessary in the pillar is to be calculated in the same manner—thus at a point midway between shaft and bottom of pier, the strain will be 67,000÷5=11,200, as before, but as the pillar is 4 feet long at that point, the strain upon the reinforcing is reduced to 11,200÷4=2800 pounds. When calculating the foot brace, it was ascertained that a round steel rod ½ inch in diameter would safely carry 1250 pounds, and as 2800÷1250=2.22, we may safely say that three ½-inch rods will carry the strain in the pillar, provided the bracing masonry at *h* be made of a length from the reinforcing, that the tensile strain at any vertical distance from the bottom of the pier, divided by the length of cross section at that point, shall not exceed 3750. Thus the rule for the slope or batter at *h* is found, and it will be ascertained by calculating several points in the slope on that side of the pier that the line *b h f g* is a portion of a hyperbola, and the experienced calculator of this class of work will at once lay down such a curve and he will determine it in much the same manner that the expansion line is determined for an indicator card from the steam engine. It is the same curve in both instances.

CHAPTER IX.

Roof Timbering and Trusses.

When a roof is to be supported upon walls and posts a-plenty, the problem is a very simple one—merely that of ascertaining the strength of timbers necessary to support the roofing and whatever load of snow may collect upon it together with the usual amount allowed for wind pressure, which should be taken at about 40 pounds to the square foot for the highest winds likely to be encountered by a surface standing squarely across the direction in which the wind is blowing. It is, then, necessary to brace the walls of a building to withstand a wind pressure of 40 pounds to the square foot.

The roof should be figured to withstand the same pressure, but as the surface of the roof is not at right angles to the wind, but slopes to a considerable angle, it will be about right to multiply by 40 the sine of the angle made by the roof with the horizon. This means that a roof, no matter how wide, which rises one foot, will be taken as exposing one foot of resisting surface to the wind, instead of its whole width. In the instance mentioned, the vertical hight of the roof would be multiplied by the length of course. This means that the length of a roof, multiplied by its vertical hight and by 40, will give the wind load which the roof should be constructed to resist.

Trautwine lumps the snow and wind loads at 20 pounds to the square foot of roof, 12 pounds for snow and 8 pounds for wind pressure. The snow load is for north of the 35th degree of latitude, and the load must be estimated more or less according to the characteristics of the locality. For instance, at Albany, N. Y., there is comparatively little snow, only two or three feet is usually in evidence at any time; while just over the mountains, in western Massachusetts, the snow piles up eight feet deep nearly every winter. Thus locality must largely determine the snow and wind factor required in any roof construction.

WEIGHT OF ROOF COVERING.

The weights of ordinary roofs may be taken about as follows:

Corrugated iron	2 to 3	lbs. sq. ft.
Slate	7 to 9	“
Shingles on strapping	2 to 3	“
If on boards, add	3	“
If plastered below rafters, add	6	“
Tin (not counting boards)	1	“
Matched sheathing	3 to 5	“
Tiles	12 to 25	“
Rafters	1.5 to 3	“
Purlins, steel	2 to 4	“
Purlins, wood	2 to 4	“
Steel shingles	1 to 3	“

Roof truss, steel—multiply distance between supports by distance between trusses and multiply product by the length of truss divided by 25, with 1 added to the quotient. The weight of a wooden truss is a little less. By algebra, $W = al(\frac{1}{25}+1)$; where

W = weight of truss
a = distance between adjacent trusses
l = length of truss between supports.

ROOF TRUSSES.

As stated, where there are plenty of posts, purlins may be run to carry the roof timbers or rafters and no framing will be required, but where a clear story is required, and the distance between walls is too great to be covered by a single span, then some form of truss is necessary to sustain the roof and its waterproofing. While it is not the purpose of this book to go deeply into truss designs and construction, a few first principles are given to enable the millwright to plan a simple roof or truss.

The common pitch roof with its rafters, collar beams, plates and tie-beams is nothing more or less than a simple trussed roof, and the principles used in determining the necessary strength of rafters for such a roof are the same as are used in calculating the most complicated roof truss. Fig. 56 shows a simple rafter roof, the width of building *l* being the distance between supports of the truss, and the distance between rafters *a* being the distance between trusses. This will be taken as 2 feet and *l* may be taken as 20 feet.

Next, to calculate the weight of the roof which is to be slate on sheathing: The roof is what is known as "half-pitch," the hight of ridge being one-half width of building. This brings the length of rafter from plate to ridge about 14.1 feet, and counting the projection of the eaves the roof slant will be about 16 feet. From the list of weights of roof materials it is found that the weight of the rafters will be about 2 pounds to the foot, sheathing 4 pounds, tin 1 pound; a total of 7 pounds. To this should be added about 1 pound for the collar-beams *b*, making the total roof weight 8 pounds to the square foot. A space 14x2 feet is handled by each rafter, therefore the load carried by each pair of rafters will be $8\times28\times2=448$ pounds.

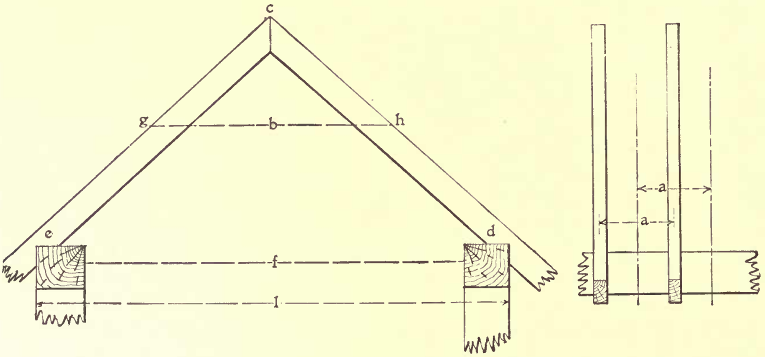

FIG. 56.—CALCULATING STRENGTH OF RAFTERS.

Add to the above a load of 20 pounds to the foot for wind and snow loads and it will be found that each rafter has to carry a total of 560 pounds or 1160 pounds for the pair of rafters, and the strength necessary can be figured taking the rafter as a beam 7 feet long (from *c* to *g*) fixed at both ends, carrying an evenly distributed load of 280 pounds and inclined at an angle of 45 degrees. The section of rafter from *g* to *c* must carry the same amount of load, also, in addition to the 280 pounds of evenly distributed load from *e* to *g*, there is a load of 280 pounds more at point *g*, owing to the tying together of the rafters by the collar-beam *b*.

A Simple Roof Truss.

Should it become necessary to put a heavier roof on the structure, you can use 2-inch planking so as to permit the rafters to be replaced by crude trusses placed farther apart than the rafters, and forming a sort of nailed-up truss, as shown by Fig. 57. The calculations for the weight of roof will be slightly different when this form is used. First, the weight of the truss to the square foot of roof must be found, instead of taking a lump sum for the weight of the rafters. Taking the formula:

$$W = al\left(\frac{l}{25}+1\right),$$

the known values are put in place of the letters and there is obtained:

$$W = 3\times 20\times\left(\frac{20}{25}+1\right), \text{ or}$$

$$W = 60\times 1.8 = 108 \text{ pounds.}$$

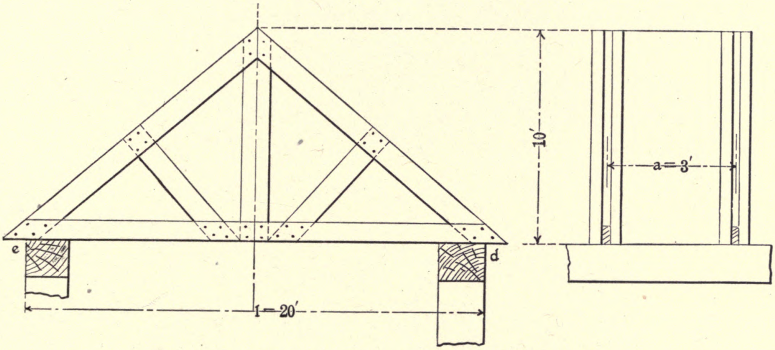

FIG. 57.—A SIMPLE ROOF TRUSS.

Really the above rule says that the weight of a truss (steel) for a 20-foot span will be 1.8 pounds to the square foot. When the truss is made of wood, as in this instance, it is probably about 100 pounds in weight or possibly 1.6 pounds weight to the square foot. The great loss, however, lies in the extra thickness of planking required with trusses spaced further apart than the rafters.

The weight of the planking would be about 8 pounds to the foot, truss 2 pounds as before, and tin 1 pound, making a total of 11 pounds. And 11×14×3=462, or 924 pounds to be carried by each truss. Add to this 20×14 ×3=840 pounds for wind and snow. This amount added to the weight of roof makes 840+462×2=2604 pounds to be carried by each truss, or 1300 pounds at each end, *d* and *e*. To ascertain the strains in each member of this truss, the millwright may make the diagram Fig. 58 and there lay out the several strains as they are determined.

Were the stresses at each joint to be computed for the total roof load distributed among the joints 1, 2, 3, 4, and 5, in such a manner that 1 and 5 receive one-half as much as each of 2, 3, and 4, the loads on which are equal, then 1 and 2 would each receive ⅛ of 2600=325 pounds, while 2, 3, and 4 would each carry ¼ of 2600=650 pounds. But as the wind pressure is never carried by both sides of the roof at the same time, there must be some other method of distributing the loads, and this had better be done by calculating separately the loads caused by the weight of the material in truss and roof, the snow load, and the wind load, and the three sets of figures at each joint of the truss refer respectively to loads for weight of material, snow and wind, as follows:

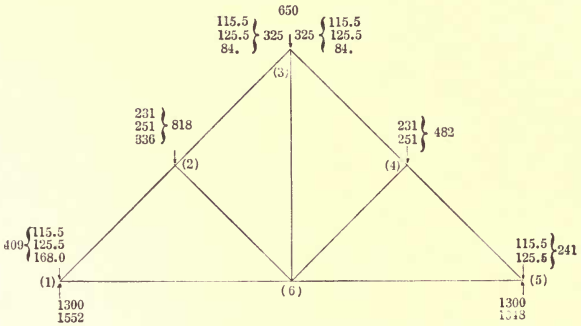

FIG. 58.—WEIGHT, SNOW AND WIND STRESSES AT JOINTS OF TRUSS.

Weight of material in roof............. 924 pounds.
" " snow load ....1004 "
" " wind pressure .... 672 "

Dividing each of these quantities by 8 for the loads at 1 and 5, and by 4 for the loads at 2, 3, and 4, the material and the snow loads are found to be as follow:

$$924 \div 8 = 115.5 \qquad 924 \div 4 = 231$$
$$1004 \div 8 = 125.5 \qquad 1004 \div 4 = 251$$

But the wind load of 672 pounds must all be carried by the truss on one side of the roof, hence one-half of this load comes upon the truss joint 2 while the rest is evenly divided between joints 1 and 3 except 84 pounds at (3), which is carried by (5). This gives 336 pounds for (2), 168 pounds for (1) and 84 pounds for joint (3), giving the loads at the five joints as follows:

No. 1=409
No. 2=818
No. 3=650
No. 4=482
No. 5=241

Total, 2600

Thus it will be seen that the windward side of the truss is loaded the most and that the middle joint (2), has the most load to carry of any of the joints. To take care of the strain upon the other side of the roof when the wind is in the opposite directions, it will be necessary to timber both sides of the roof according to the wind pressure figures given for joints 1 and 2, therefore joints 4 and 5 must be calculated as though loaded like joints 1 and 2.

STRAINS MODIFIED BY WIND PRESSURE.

To properly take care of the wind pressure strains, the several stresses are modified as shown by Fig. 59 and the strength of the several members of the truss are arranged to meet the strain as thus distributed. To find what strains are present in, or must be met by each strut or tie is called "analyzing the

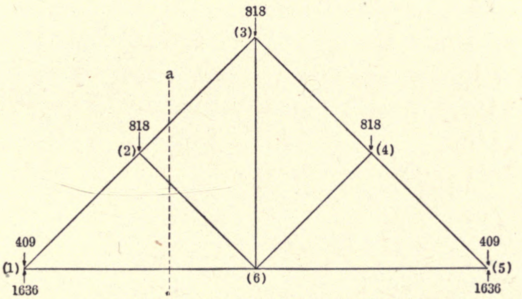

FIG. 59.—STRESSES ADJUSTED TO WIND PRESSURE.

truss." It is evident that the several pushes and pulls in any joint of a truss neutralize or balance each other, and in Fig. 59 it is evident from an inspection of the truss that members 16 (1 and 6), 65, and 63 are in tension and that all the others are in compression. This being the case, the first set of members can be made in the form of rods, if necessary.

Analyzing the Strains in a Truss.

To properly understand the graphic method of analyzing a truss by the "joint" method, something must be known regarding the parallelogram of forces, and that subject must be looked up by the millwright. The other method of ascertaining the strains in a truss is by what is known as the section method, and to use that way a section is supposed to be cut through various sections of the truss, as at *a, b,* Fig. 59, and the strains there found are studied.

The Parallelogram of Forces.

To easily and quickly obtain a little knowledge of the parallelogram of forces, procure some strong cord and three spring balances. Hang up the three balances with two of them side by side, as shown by Fig. 60, putting a little spreader between the cords at *e* that the balances may hang perfectly parallel. Then hang on the third balance, and lastly put on a weight *d,* supposedly, in this case, of 25 pounds. Any weight may be used

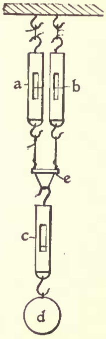

FIG. 60.—STUDYING FORCES.

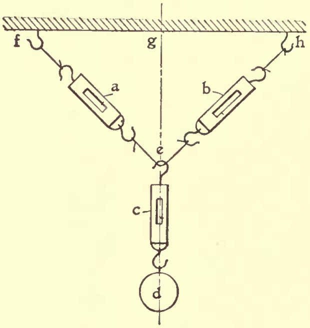

FIG. 61.—COMPONENT AND RESULTANT FORCES.

which is not too great for the small scales which have a limit of about 50 pounds each.

With the balances adjusted as above, note the reading on scale *c,* and also note that the reading on each scale *a* and *b* is just one-half the reading of *c.* Next, separate the points to which scales or balances *a* and *b* are attached until they are exactly twice as far apart as the point *e* is distant from *g.* It may require a little juggling to obtain the desired positions, but it can be done by taking in and letting out the cords until the desired arrangement is effected. When the cords have been adjusted, the arrangement will be as shown by Fig. 61, and it will be found that the reading of scales *a* and *b* is exactly equal, as before, but they both now indicate more than one-half the weight of *d,* as shown by balance *c.*

If it happens that the balances have been suspended so that the distance *f h* is exactly twice the distance *e g* and if the cords *f e* and *e h* are also exactly equal in length, then the two cords in question will hang at angles of 45 degrees with line *f h,* and the balances *a* and *b* will indicate 17.67 pounds each. If, however, the cords *f e* and *e h* do not chance to be exactly equal in length, then there will be a slightly different reading on the balances *a* and *b,* and by means of these readings it is easily possible to determine the angles at which the cords happen to hang.

In this engraving the forces indicated on balances *a* and *b* are said to be the component forces of the force *c,* while force *c* is known as the resultant of forces *a* and *b.* As all three of these forces act upon the same point (*e*) they are said to be concurrent forces, and Fig. 62 shows how such forces may be measured when they occur in a truss.

GRAPHIC REPRESENTATION OF FORCES.

To lay down upon a surface a representation of the forces acting at the point *e,* Fig. 61, it is necessary to use some convenient scale and let equal distances equal equal forces. Thus in Fig. 62 it will be understood that 16 pounds are represented by a line one inch long, and the direction of that line and the arrow upon it indicate the direction in which the force is acting. If we draw this line from *e* to *g,* using the scale of 16 pounds to the inch, for the reason that a scale of sixteenths can always be found, that line *e g*, will represent a force of 25 pounds acting vertically downward. The lines *e f* and *e h* are drawn at the same angle as in Fig. 61. Then from the top of the 25-pound line, at *g*, draw the line *g j*, making it exactly parallel with line *e f*.

From point *j*, where the line *g j* cuts line *e h*, measure to *e*, and that distance will be found to be exactly 17.67 by the scale shown at the top of the engraving. This layout is called the parallelogram of forces, and all truss calculations depend upon it for their solution. It will be noted that the truss, Fig. 58, is almost an exact representation of the parallelogram of forces in an inverted position. That happens to be a mere coincidence, but it goes to show the connection between the figures in question.

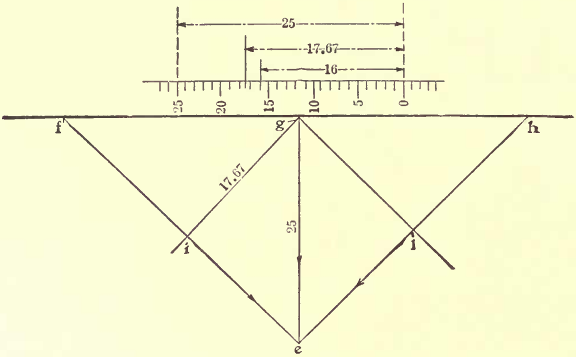

FIG. 62.—THE PARALLELOGRAM OF FORCES.

Having given some of the forces and their directions in the truss, Fig. 58, it is our task to find the rest of the forces and their directions in order that the proper amount of material may be put into those members to enable them to safely do their work.

"CLOCKWISE" AND "COUNTER-CLOCKWISE."

We may begin at any point in the truss to analyze the strains, and the usual custom is to proceed from one joint to another, always moving in the same direction, until all the joints have been studied. There are two directions in which it is usual to pass around each joint, one, proceeding from left to right, and called "clockwise," and the other method of procedure is from right to left, and is called "counter-clockwise." It is usual to proceed "clockwise," and that method will be followed.

Beginning at (1), Fig. 58, an angle is found, one line being horizontal, the other approaching the point (1) at an angle of 45 degrees. Draw this intersection at Fig. 63, and the problem becomes that of determining the forces acting in the two unknown elements (1) *a* and (1) *b,* whose directions are known, but not their force. To ascertain the magnitude of forces *a*(1) and *b*(1), Fig. 63, draw the vertical line *c*(1), Fig. 64, giving it a length of 16.36 sixteenths of an inch; then lay off line *d c,* and as the angle of line *d*(1) is 45 degrees, the length of lines *d c* and *c*(1) must be equal, therefore line *c d* is also laid off 16.36 sixteenths inch long. It now remains to close the polygon of forces by connecting *d* and (1) by the line *d*(1), which when scaled is found to measure 23.50 sixteenths of an inch, and it is so marked in the diagram.

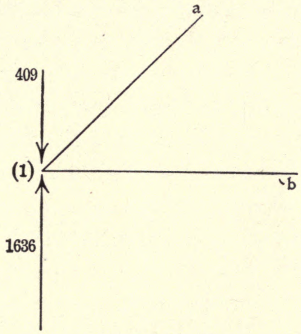

FIG. 63.—FORCES ACTING AT POINT (1).

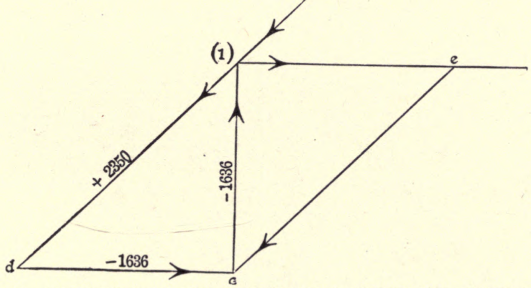

FIG. 64.—MEASURING THE FORCES ACTING AT POINT (1).

Having found the amounts of the pressures and pulls upon point (1), it is next in order to designate those strains by arrow heads showing the direction in which they act. As the stress in line *c*(1) is known to act upward, the arrow is placed thus and close to point (1) to which it belongs. As the arrows in any strain polygon must all point in the same direction, the direction of the arrows in the other sides are easily determined and are placed as shown in Fig. 64.

The arrows pointing to the joint show compression. Those pointing away from a joint indicate tension. The several joints of the truss being treated in a similar manner, the strains in all the members may eventually be determined. When the arrow heads are placed about each joint, it will be found that in some members of the truss there are arrow points facing toward each other, and in other lines the arrows point away from each other. The rule which applies here is that:

"In lines where arrows face each other, member is in tension."

"In lines where arrows leave each other, member is in compression."

A STRESS DIAGRAM.

But there is a much shorter method than drawing strain diagrams of each joint separately. It is usual to make what is called

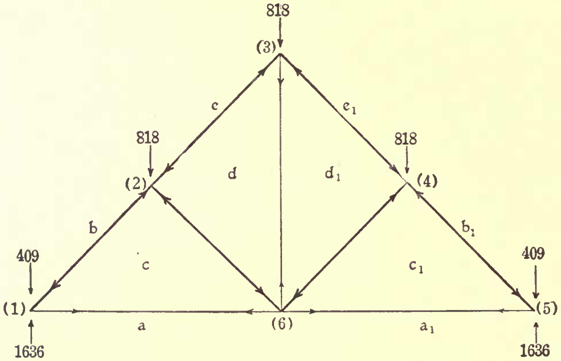

FIG. 65.—NOTATION FOR GRAPHICAL TRUSS ANALYSIS.

a stress diagram of the truss from which the tension or compression of each member may be taken off at will. Such a stress diagram of truss Fig. 57 is shown by Fig. 65. The lettering of the lines is changed to a lettering of the spaces, placing a letter in each triangle, both inside and outside of the truss diagram. By this method the line from (1) to (2) will be known as *a d*, and so on through the entire number of lines in one-half of the diagram. As the lines and their stresses are exactly the same on one end of the diagram as on the other, hence the same letters may be used, as shown, with superior or inferior figures, to designate the elements of the remaining portion of the truss. As the stresses are the same in both ends, it is only necessary to calculate the strains for one end of the truss.

In subsequent naming of stresses, the signs + and — will be used for tensile and compression strains respectively. Thus, referring to Fig. 64, the strains there found are +1636 and —2350, respectively.

To construct a single stress diagram from which all the strains for all the members of the truss may be taken, it is only necessary to determine the loads and the reactions, as shown by Fig. 65, where the loads are 409, 818, 818, 818 and 409 pounds. The reactions are 1636 and 1636. It will be noted that the sum of the loads and the sum of the reactions are exactly equal, as should always be the case. To lay out the stress diagram shown by Fig. 66, commence at any portion of the truss, preferably at (1), Fig. 65, and lay down the load there given, 409, on the vertical line of the stress diagram, Fig. 66. Take any convenient scale, the larger the better, and lay off 409 to a point which will be called *B*. Next lay off on the line the load 818, and call the end of that distance *E*. Proceed in the same manner with all the loads, giving the end of the line representing each load the capital letter which coincides with the lower-case letter of the side adjacent to the load in question. Thus the load at (3) is given the letter *E*. In Fig. 65, that load is to be found between letters e and e_1, also between b and e_1. In Fig. 66, the corresponding distance is to be found at *E*, between *B* and E_1.

Having laid down lines representing all the loads, ending at (5), turn about that point and lay off the reactions in lines to scale representing their value. Thus the lines representing 1636 will, if the drawing is accurately made, just reach from (5) to *A*, and from *A* to (1), or the "polygon closes" and the work is right so far. Then, from the point *B*, which represents the load line of (1), Fig. 65, lay off a line upon the same angle as the line *b c,* and the point where this line intersects with the center line drawn horizontally through *A,* Fig. 66, is to be marked *C,* and the length of the line *C B* in the stress diagram, Fig. 66, represents the amount of strain present in the member *b c* of the truss. Measuring the distance *B C* demonstrates that strain to be 1756 pounds.

In a similar manner, the line *e d* is started at *E* and laid down on its proper angle until it meets the line drawn from *C,* parallel with *c d,* and the point of intersection of these lines is marked at *D.* The reference to letters on drawings No. 65 and No. 66 will readily be understood without further mention of their numbers, as the capitals and lower-case prevent any confusion between them. The length of lines *D E* is the measure of the stress in member *d e,* and, likewise, the line *C D* when scaled gives the amount of stress in *c d.* These two quantities are found to be 1178 and 578, respectively.

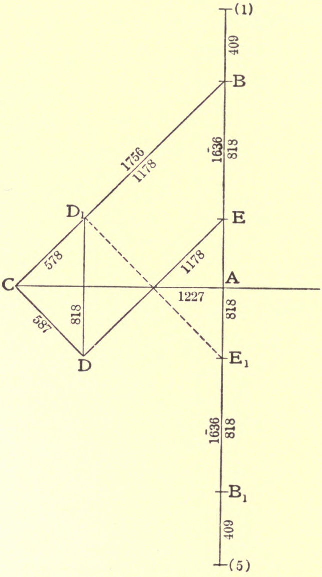

FIG. 66.—CONSTRUCTING A STRESS DIAGRAM.

Should a line be drawn from *E,* parallel with line d_1 e_1, the measure of that line, which is shown dotted from D_1 to E_1, will prove to be the measure of member d_1 e_1, and it scales 1178 the same as line *D E*. Should points *D* and D_1 be connected, the line thus obtained measures 818, and represents the strain in line d d_1. The line *C A,* 1227 long, is the measure of the load in *a c,* also in a_1 c_1, thus giving all that is necessary to make up a stress record of the truss. The manner of the load, whether tensile or compression, is easily learned by inspection, and in Fig. 65 the members under compression have all been drawn in heavy lines, leaving the tension members in light lines. This forms a very good way of designating the character of load and one which is not easily mistaken. The following table shows the usual manner of making up a stress record from which the size of the necessary truss members may be readily computed, their length being known from a large drawing, or they may be found directly by computation, a combination of the two methods being used in practical work.

STRAIN RECORD.

Member	bc	cd	de	dd_1	d_1e_1	c_1d_1	b_1c_1	a_1c_1	ac
Stress	-1756	-578	-1178	-818	-1178	-578	-1756	-1227	-1227

Having obtained this data, the millwright may construct the truss in accordance therewith, and he must be sure to put nails or bolts enough in the joints of the truss to withstand the several strains laid down as above. It requires a certain number of spikes to carry a load of 1225 pounds. Just how many is an open question, and some light will be shed upon that problem in a later chapter. The figures given above were obtained by means of the slide rule, and the measurements were made upon a very small scale without the expectation that they are accurate enough for steel-work. They are intended merely to acquaint the millwright with one method of calculating roof strains and trusses for carrying the same, in order that he may have a little "know-how" at hand when necessity calls, also that he may become interested in the fascinating study of trusses, thereby adding to his working knowledge and to his value to his employer—and incidentally increasing his cash account by drawing a better salary on account of the acquired knowledge.

Evolution of the Truss.

Having found how to calculate the elements of a simple truss as shown by Fig. 57, it is proper that a hint should be given regarding the development of more elaborate trusses. In the form shown by Fig. 57 and several other drawings, the truss is simply a large letter A. If it be necessary to erect a truss without building it to so great a hight, some means must be devised for cutting off the top of the truss and still retain the same supporting power which was possessed by the members thus dispensed with. Accordingly, as shown by Fig. 67, the peak or apex of the truss was cut off to the hight desired, and the A-portion of the supporting timbers *a* and *b,* were simply cut up into short portions and disposed at the same angle they previously occupied in the spaces *d e, e f, f g, g h,* etc., and the resulting design is, after the rods have been shortened to the lengths *e e, f f, g g,* etc, a form of the Howe truss. An upper chord, *a h,* was added and carried through *c,* where the unchanged application of the A-frame is shown before cutting it down into a Howe truss.

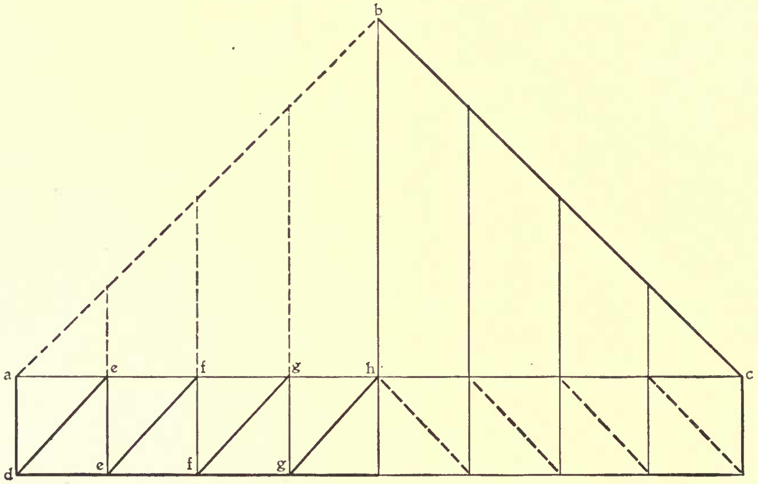

FIG. 67.—EVOLUTION OF THE HOWE TRUSS.

Sometimes the A-frame truss was inverted, as in Fig. 68, owing to conditions, and the span was supported upon the posts and strain-timber, rod or cable, as shown at *b c l.* When the V-support got in the way, it was cut off, as shown, at *c d,* the posts *i j k l* cut off and tie-rods *e f g h* put in position, a top chord *d* added and the V-frame caterpillar came forth a full-fledged Pratt truss.

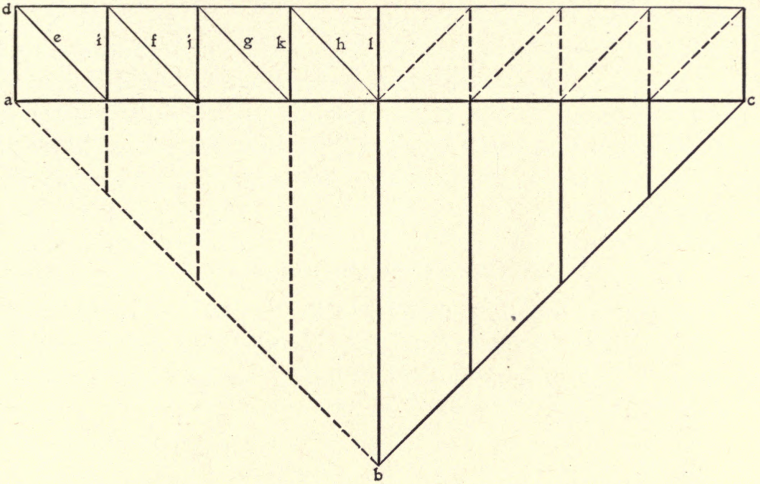

FIG. 68.—EVOLUTION OF THE PRATT TRUSS.

The strains in both these trusses, also in all modifications of these forms, and in all other forms and their variations, may be quickly calculated by means of the strain diagram shown by Fig. 66—or another diagram made to fit the structure.

FLAT ROOFS.

Roofs which are to be covered with "tar and gravel" as it is commonly called, or "composition" as it would be technically termed, should never have a pitch of more than ¾ inch to the foot, and a great deal less will answer most purposes. For this kind of roof the truss, in some form or other, is almost a necessity, unless the post and beam method of framing can be followed out.

THE COMPOSITION ROOF.

The time-honored "tar and gravel" composition roof is very desirable for mill construction. There is no lost room under a roof of this kind, and the heavy roof timbering necessary is often useful for hanging small counter-shafts and for the attachment of elevators, conveyors, etc. The timbering for this floor should be ample to prevent its springing under load, thereby cracking the tarred paper upon which the tightness of the roof depends. The sheathing should be tongued and grooved and well laid with no open cracks or knot holes.

Three thicknesses of tarred felt should be used, the roof first being covered with a layer of resin-sized felt lapped a couple of inches and fastened with tacks sufficient to hold it in place. It must be stated that this covering of paper is seldom used except upon concrete roofs, and even then it is often omitted, especially in contract work.

Laying a Composition Roof.

The method usually employed in laying these roofs is shown by Fig. 69, the first course of felt being about 12 inches wide as shown at *a*. Some roofers double a course back 12 inches and lay it with the double edge at the bottom, but it seems preferable to cut one course, lay the 12-inch strip at *a* and the 24-inch strip over the 12-inch one, as shown at *b*. Next, a full width or 36-inch

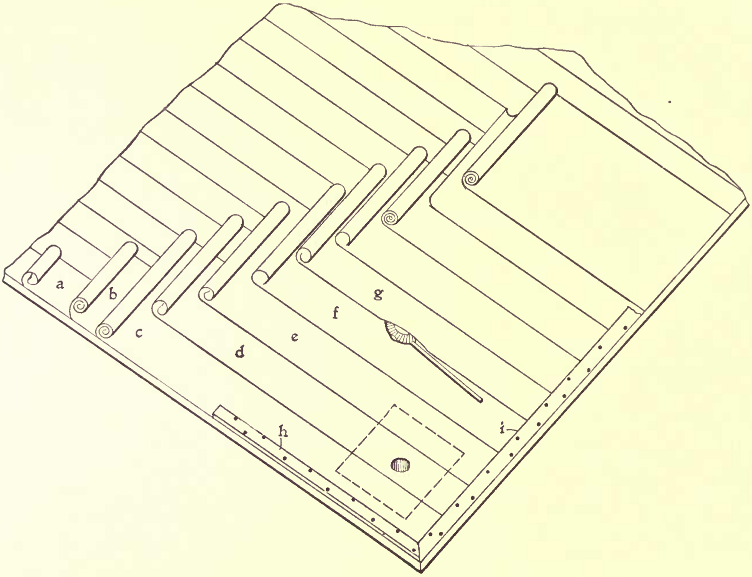

FIG. 69.—LAYING COMPOSITION ("TAR AND GRAVEL") ROOFING.

strip of tarred paper is unrolled as shown at *c,* and other strips *d, e, f, g,* etc., are unrolled as shown, each strip lapping two-thirds its width upon the preceding strip, thus securing three thicknesses of the felt laid "clapboard fashion" from eaves to middle of roof.

To fasten the tarred paper some hot tar is run under each lower edge of the paper, the conical dipper being so made that it may be pushed along under the edge of the paper leaving a thin trail of hot tar as the tool progresses from end to end of the roof. Next, a strip of board about ⅞x2½ inches is nailed around the edge of the roof after the paper has been thoroughly swabbed with hot tar. After the strip is in place it is also given a coat of hot tar, and clean gravel is spread over the hot tar on the felt to serve as a protection for that substance and to prevent its running off as freely when the hot sun gets in its work in summer. If a roof be given a pitch greater than ¾ inch to the foot, the tar will run in spite of the gravel coating; ⅜ inch to the foot is plenty steep enough for composition roofs.

It is of great importance that the tarred paper be of good quality, for upon its quality depends the waterproofing, and nothing is more aggravating than leaks in a roof, especially in a new roof. For work which is required to be the best possible, irrespective of expense, it is the custom to place a second layer of felt over the triple layer. The second layer is laid more to the weather than the first layer—sometimes 20 or 22 inches—and it is then mopped with hot tar, and another coat is flowed on just before the gravel is spread.

Thick felt ranging from 1/16 to 3/16 inch can be obtained, all covered with fine gravel, and only needing to be placed on the roof, nailed in place, and the laps made with a composition which comes inside the roll. This material makes a very desirable roofing and it stands well in hot climates as well as in dry cold latitudes. Sometimes layers of felt are alternated with layers of pulverized slate and asphalt. This material can be used upon roofs so steep that tar and gravel will not stay on them. The "plastic slate roofing," as it is called, may be applied with a trowel directly to wood or to masonry surfaces, and it adheres so strongly that tight work can be made with but little use for metal flashing which is so necessary with other roofs.

TIN AND COPPER ROOFS.

Tin makes the lightest roof of any material in use for waterproofing. It is also the cheapest, if the tongued and grooved sheathing necessary underneath is not considered. When the millwright has to look after roofers who are laying tin, he should see that no inferior plate is used. It is easy to substitute lighter plate, but the millwright has the remedy at hand all the time. He has only to weigh a square foot of the tin and if it weighs 8 ounces he may know that "one cross" (1X) tin is being used. If the 12x12-inch piece should weigh 10 ounces, then "1C" would be the grade of that piece of tin. Lighter than 8 ounces to the square foot is not good enough tin to pay for putting on a roof.

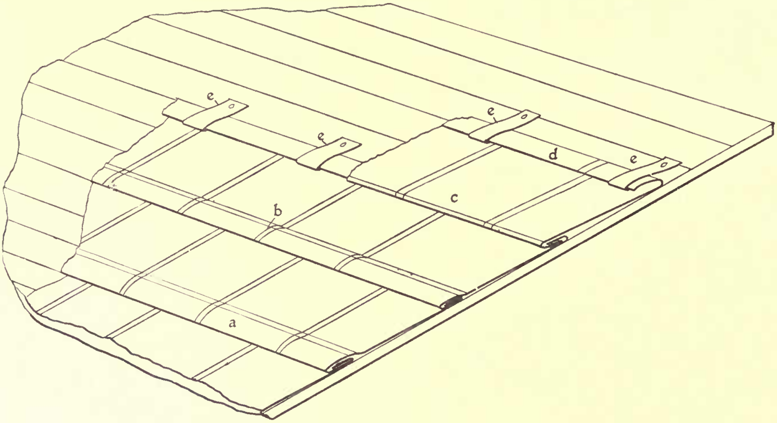

FIG. 70.—LAYING A TIN ROOF.

While standing seams are used, they are for show more than for use, though on large roofs they will, it is claimed, take care of expansion better than when the seams are hammered flat and soldered. But as the standing seams run only one way of the roof, while the seams in the other direction are all hammered flat and soldered, the writer fails to see any benefit to be derived from unsoldered seams standing 1 inch above the roof in one direction only.

Never allow a tin roof to be fastened to the sheathing by nailing through the tin, either in the lap or anywhere else. Always insist upon the tin being put together in the shop into strips as long as the roof horizontally, or as long as the strips can be handled easily. Then lay the strips as shown at *b* and *c*, Fig. 70 and let cleats *e e e e* be placed as shown, every 14 or 15 inches, and locked under the front edge of the tin. Let each cleat be nailed as closely as convenient to the edge of the sheet to which the cleat is hooked. Then when the next sheet is in place and the seams hammered down over the cleats it will be impossible for the cleats, which are cut about 1½x3½ inches, to pull out. Neither can the expansion of the tin pull it free of the nail-heads, something very apt to happen when the tin is nailed direct to the roof.

See that the long strips are pressed snugly home when in place, as shown at c; and before hammering down the seam *c* put all the cleats in place; see that the last strip in place lies straight and bears fully against the sheet it is locked with. After the seams have been hammered down, as at *a* and *b*, see that they are soldered well, that no holes are left and that no acid shall be used in soldering. Use resin, nothing else, for a flux when soldering a roof. Acid makes it some easier for the tinsmith, but it is bad for the roof and is apt to cause rust. A very good way to use resin and to prevent it from being blown away by the wind is to pound the resin in a stout bag, or run it through a coffee mill or otherwise pulverize it so it will pass through ordinary wire-cloth fly screening. Then place some of the resin in gasoline until that liquid will dissolve no more. Apply the dissolved resin with a small brush or a bit of cloth wound around a wire or a stick. The gasoline evaporates quickly, leaving the resin fixed just where it is needed.

Where tin is turned up against other parts of the building, such as chimneys, skylights, or other buildings, insist upon its being turned up at least 4 inches and then capped with lead or zinc flashing well cemented into the walls or chimney in question. For a first class job, have the tin painted before it is placed on the roof, and do not allow it to be painted after soldering until a storm or two has washed the tin thoroughly and slightly rusted it. The paint will adhere much better when thus applied. All resin should be thoroughly cleaned from the tin before painting the roof.

Repairing Leaky Tin Roofs.

The millwright sometimes has repairs to make on tin roofs which are full of holes and quite beyond even the possibility of soldering. A quick way of making repairs to roofs of this kind is to procure a few pounds of portland cement and scatter it on the roof. With a broom sweep the cement back and forth until some of it has penetrated into every hole that exists in the tin. Then with a common watering pot, fitted with a very fine rose sprinkler, go carefully over the entire roof, wetting it thoroughly but not wet enough so the water will run. "Just a heavy fog" is exactly what is wanted—enough to dampen the cement in the holes it has found its way into.

Once the cement has been well dampened, go away and leave it until the next day; then paint the roof with some good elastic paint, or elastic roofing, and the holes will be so thoroughly closed that the roof may not leak again for a year unless something happens to strain the roof sufficient to break the cement in the holes.

Copper Roofing.

Copper should be applied in about the same manner that tin is put on, and the strips of copper can be had of considerable size—as long, in fact, as the tinner can find length of machines for the bending and locking or seaming. Probably the millwright will have but very little to do with copper roofing, for although it makes a most durable roof its first cost is often prohibitive unless for the very best buildings. It is seldom that a mill is found with a copper roof.

Slate Roofing

It will not pay to use slate on roofs having less pitch than 5 inches to the foot, though slates can be laid tightly on a surface of almost no pitch at all. This, however, means the expense of bedding each slate in cement. Even with ordinary half-pitch roofs (half-pitch means that the hight of the roof is one-half the width of the building) the slates in valleys, for at least two feet on each side, also above gutters, should be laid in good elastic cement. The trade calls this "rendering," and it should also be done on all vertical pieces of slating and on the tops of ridges and hips for at least a foot in width. This is to prevent water from backing up under the slates.

No slate should be permitted to be laid without two nails in it, and the tip of every slate should be lapped by the second course at least 3 inches. The nails should be 3-penny or 4-penny, with large heads and should be driven so carefully that they do not either crack the slates or let them rattle, and no nail should be used which is not tinned, galvanized, or made of copper.

It pays to use copper gutters on slate roofs and to put in good open gutters at least 18 inches wide. A strip of metal may be put on the roof and nailed to the sheathing, the slates cut, nailed and "rendered" and lapping over the metal. The writer, however, much prefers to put in gutters made of separate strips of metal, laying them in with the slates and overlapping the strips to form the gutter instead of nailing a single sheet solid to the sheathing. With the loose, lapped sheets expansion takes care of itself.

Monitors and Skylights.

When roof lighting is to be provided, and especially during the construction of skylights and "monitors" the millwright will do well to keep a very close watch on the manner of connecting or attaching the super-structures to the mill roof. There is no worse leak to handle than one under a skylight or monitor. Unless sufficient strengthening is put into the roof directly under the wall or combing of the superstructure there is sure to be more or less settling of the roof, the boards of which lie nearly flat. The combing of a skylight stands on edge, and it will not settle with the roof, but stands stiffly upon the supporting beams or trusses and permits the roof sheathing to sag away from it.

The water very quickly finds its opportunity in a case as above, and leaks will surely occur and persist in remaining in evidence no matter what attempts are made at repairs. See that the necessary headers are put in below all monitors, deck-stories, skylights and hatches to make perfectly rigid the connection between the roof sheathing and the wall or combing of the structure erected upon the roof. In more than one instance the writer has been forced to put in timbers to carry the weight of monitor walls, and the timbers once in place, the leakage problem was settled once for all by boring holes through the timbers and the frames of monitors or skylights into which 3/8-inch bolts were placed and screwed home. The same trouble has been more than once experienced by a millwright in keeping the sides and bottom of a flume from springing apart under the water pressure.

"Saw-Tooth" Lighting.

The same trouble, as noted in the foregoing, is to be guarded against when buildings are constructed to be lighted from the roof on the so-called "saw-tooth" plan. That is, the top of the building is cut up into small inclined roofs, the wall of which is vertical or nearly vertical on the north side of the building, while the remaining side of each narrow roof section inclines downward to the bottom of the adjacent nearly vertical wall. Each of these walls is to be composed almost entirely of glass so as to give a large volume of "north light" and to the exclusion of almost all the direct rays of the sun.

While the saw-tooth system gives most excellent lighting effects, the millwright should pay close attention to the manner in which the window wall and the roof of the succeeding saw-tooth are joined together. It is very apt to develop the old trouble met with in placing a skylight on a roof without proper carrying timbers underneath, resulting in the roof settling away from the vertical member of the "saw-tooth." It is then "up to" the millwright building inspector to see that sufficient timbering is placed underneath the root of each "tooth" that the inclined portion can never sag away from the vertical portion of the structure.

CHAPTER X.

Strength of Materials.

How much load will a $\frac{7}{8}$-inch bolt carry safely? That is a question the millwright has more than once asked himself when setting up machinery or hanging shafting. If a millwright should come to work some morning and find the entire steam boiler, setting and all, to the extent of 18 tons hanging overhead suspended by a single $\frac{7}{8}$-inch rod, that millwright, or any other sane man, would go a long ways around before he would pass underneath the load thus suspended. And yet the $\frac{7}{8}$-inch rod might hold up the 18-ton load, and again it might not. If two rods were used to carry the load, making nine tons apiece, the millwright would still look sidewise several times before trusting himself beneath such a deadfall.

Should the steel in the suspension rod be of a strength of 60,000 pounds to the square inch of cross section, it would just carry the load of 18 tons, as the following calculations will show:

Tensile strength of a bar 1x1 inch$=$60,000 pounds.

Area of a circle $\frac{7}{8}$-inch dia.: $0.875\times0.875\times0.7854=0.6$ sq. inch.

$60{,}000\times0.6=36{,}000$ pounds$=$18 tons.

But nobody knows exactly the strength of a steel rod until that rod has been pulled apart in a testing machine and the load necessary to break the rod has been carefully noted. The steel manufacturer cannot tell beforehand what is the exact strength of the steel he is making. Should the percentage of carbon in the steel vary ever so little it causes a corresponding variation in the strength of the finished product.

Steel which will harden is not desirable for bolts or rods, and if the percentage of carbon in any steel amounts to 4/10 of one per cent., that steel will harden sufficiently to make good cutting tools. Ordinary cast steel contains about that amount of carbon. Steel containing carbon enough to harden becomes so treacherous in its behavior that it is not desirable for structural work or for forgings. High carbon steel when it does fail does so with a snap, while the low carbon steels fail by first stretching gradually under about one-half their breaking load.

The steel manufacturer can never tell exactly beforehand how much carbon a certain lot of steel will contain. He can determine exactly, after the steel is made, just the amount of carbon it does contain, but to determine that matter exactly beforehand is beyond the power of the manufacturer. Possibly there may be defects in the making of the steel which cannot be seen however close an examination the steel is subjected to, therefore the millwright is unable to trust any steel or any other material as well with the full breaking load on account of the unknown condition noted above.

The elastic limit of soft steel is about one-half its breaking load. That is, steel will begin to stretch when loaded with about one-half what is required to break it. The millwright, then, cannot use even one-half the known strength of any piece of steel on account of possibly pulling the metal out of shape by the load placed upon it. "But," the millwright now asks: "What load can I safely place on a steel rod which begins to stretch under 8 tons pull, and breaks just above 16 tons load?"

FACTOR OF SAFETY.

To safely allow for the possible variation of carbon in the steel, for the presence of possible (not probable) defects in manufacture of the steel, and also to allow for the variation in the load above the supposed amount, it is customary to use only one-tenth to one-fifth the breaking load as the safe working load. For ordinary places where the load is steady, as in steam boilers and bolts, rods and other structural metal work, 5 is the usual factor of safety, but for certain parts of bridges and certain portions of machines where the load is not steady but takes the nature of a blow, then only one-tenth the breaking load should be placed upon the metal and its factor of safety becomes 10.

Thus, in the case of the rod which sustains 18 tons, or breaks under that load to the square inch, accordingly as the carbon varies a few tenths of one per cent.—only one-fifth of the 18 tons should be used as a safe load, and 3 6/10 tons, or 7200 pounds, is all that should be placed upon the rod in question. But should the rod be used for a bolt even less load should be placed upon it for the reason that a portion of the metal is cut away when the bolt is threaded. The tables of bolt threads give 0.731 inch as the diameter of the bolt at the bottom of the thread. This diameter corresponds to a cross-sectional area of 0.42 square inches, and $0.42 \times 60,000 \div 5 = 5040$, meaning that no 7/8-inch bolt should ever be put in to carry more than 5000 pounds tensile strain. In boiler bracing, not even that load is allowed, for the requirements of The Hartford Steam Boiler Inspection and Insurance Company recommend that no boiler brace, 1 inch in diameter, shall be placed to carry more than 5000 pounds.

TRANSVERSE STRENGTH.

The calculations for the strength of a bolt, above noted, are all for a direct pull upon the metal. There are other strains to which the metal is subject in machines and power transmissions. When a rod is laid upon two supports and must carry a load placed on the rod between those supports, then the load is said to be transverse, and the amount of load which the rod can carry depends entirely upon the tensile strength of the material of which the rod is composed and the manner in which the rod is supported. This is shown by Fig. 71, in which a rod is shown resting upon two supports, *c* and *d*, with a load applied at *e*, midway between the supports. If sufficient load is applied, the rod is bent, either by stretching at *a* or by upsetting, or compressing at *b*.

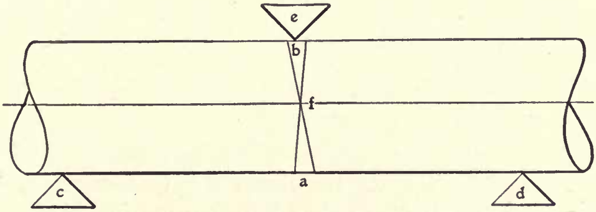

FIG. 71.—TRANSVERSE STRENGTH.

Calculating the strength of beams or levers—they are the same as far as calculations are concerned—is about the worst piece of mathematics the millwright will have to contend with. The calculating of tensile strength is easy. Compression and shearing calculations are also very simple, but the transverse strength of a beam is a hard thing to handle. The calculation itself is not hard, but to understand why it is done as indicated—that is where the hard part comes.

THE STRENGTH OF A BEAM.

It must be understood that with one beam twice as wide as another the larger beam is just twice as strong, but a beam twice as deep as another is more than twice as strong. Such a beam would be a good deal more than twice as strong. In fact, such a beam would be eight times as strong. The strength of a beam as regards its depth increases according to the cube of that dimension.

Fig. 72 illustrates this matter: The beam A has a certain strength which will be measured by its width, multiplied by the cube of its depth. Thus, 2×2×2×2=16. The beam B, which is twice as wide as A, has its transverse strength, or its carrying power, measured by 4×2×2×2=32, thus beam B is just twice as strong as beam A. But beam C is the same size as beam B, with the difference that it has been turned up edgewise, thus making it the same width as beam A and just twice as deep. The strength of the beam in this position is 2×4×4×4=128, or eight times as strong as beam A. Thus, doubling the depth, gives eight times the strength, and the expression for any beam is: $\frac{wd^3}{l}$,

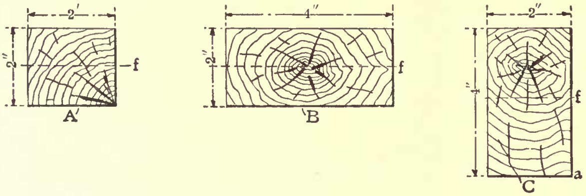

FIG. 72.—THE STRENGTH OF BEAMS.

where w=width of beam,
d=depth of beam,
l=length of beam.

Thus the measure of any beam, and the manner in which one beam shall be compared with another beam, is the width multiplied by the square of the depth and the product divided by its length.

Whenever the millwright has occasion to use the books of any of the steel companies, either the handbooks of Carnegie, Pencoyd Phoenix, etc., and attempts to take therefrom the dimensions of a beam to carry a given load, he will be confronted by a most exasperating array of figures, given in table form and headed:

I=Moment of Inertia.
T=Distance from Neutral Axis to Farthest Fiber.
$X=\frac{I}{T}$ Section Modulus.
A=Area of Section.

The best thing the millwright can do is to "get next" to these things and find out the meaning and the use of "moment of inertia," "neutral axis," "extreme fiber," "section modulus" and "unit stress," for nothing can be done with the excellent handbooks in question without a little knowledge of the things mentioned, and once that "know-how" is acquired he will have no further difficulty with beams or levers. He will be able to figure the necessary strength of a 48-inch crowbar or a 24-inch I-beam, a floor-joist, a shaft bridgetree or the frame of a machine.

In the rod shown by Fig. 71, it is a fact that no permanent bending can take place until it has been loaded beyond its elastic limit, whatever that is, and it is evident that in steel the compressive strength is much greater than the tensile strength, therefore the rod must bend by stretching at *a*. It was shown under tensile strength that the elastic limit of steel was about half its breaking, or ultimate strength, so that if the load applied at *e* be not sufficient to strain the metal at *a* or no more than 30,000 pounds to the square inch of section, then no permanent bending can take place. It is evident that the stretching and compressing meet somewhere in the distance between *a* and *e*, which is called the neutral axis, and its location is in the center of gravity of the cross section of the rod. In this case it is in the center, along the line *f*.

The strength of any fiber at *a* must not be exceeded by the strain put upon it, or the whole number of fibers will be broken, one after the other, hence the measure of the load which can be applied to any rod as in Fig. 71 must be within the safe tensile load of any fiber at *a*. This load is called the "extreme fiber stress" and its amount is determined by the distance of the fiber from the neutral axis *f*. It is evident that were the rod twice as large as at present the fiber at *a* would be twice as far from *f*; consequently it would have twice the leverage as at present and the tensile strength of the material could carry twice the present load because it would have twice the leverage to do it with.

THE MOMENT OF INERTIA.

It is evident that while the fibers at *a*, Fig. 73, can carry a considerable load owing to their distance from the neutral axis, the fibers at the axis can carry but very little load owing to the very short leverage which can be exerted by them. To find how much load all the fibers in any section can carry requires more mathematics than can be given here, and it is sufficient to state that the sum of the strain-carrying capacity of every fiber in the rod is called the "moment of inertia," and it varies according to the shape of the section and has nothing to do with the material of which the section is composed, neither does the length of that body make any difference in the moment of inertia.

The term "moment of inertia" is in itself the most misleading term the millwright will encounter in all his business. It has nothing whatever to do with inertia in any way, shape or manner. Moment of inertia may well be called the "fourth dimension" teachers occasionally puzzle students with. For instance, if we multiply together two dimensions, say length and breadth, we obtain an area. If three dimensions, length, breadth and thickness are multiplied together, we obtain a volume. If four dimensions are multiplied together, length, breadth, and the square of the distance from some other point, then we obtain the "moment of inertia."

In finding the moment of inertia, we take the area of any small portion of the cross section of the rod, multiply the area of that small section by its distance from the neutral axis of the rod, and thus obtain the moment of that small area. But to find the moment of inertia of the entire section, or the sum of all the moments of the small sections, we must multiply the area of the entire section by the square of the distance from the axis. In the case of a square rod, as at *A*, Fig 72, the moment of inertia will be the fourth power of the side of the rod, divided by 12, thus: The moment of inertia of a rod 2 inches square would be 2×2×2×2÷12=1.33. For shape B, the moment of inertia will be 4×2×2×2÷12=2.66. For shape C, the moment of inertia will be 2×4×4×4÷12=10.66.

Extreme Fiber.

Having found that the resisting value of all the separate fibers in the 2x4-inch section is 10.66, it is in order to see what load may be applied without causing trouble in the fibers farthest away from the neutral axis. As the section is 2x4 inches it is very evident that none of the fibers at *a,* Fig. 72, can be more than 2 inches from the neutral axis *f,* therefore the distance of the extreme fibers is 2 inches in the example, and in calculating the load which can be applied to the beam it must be considered that the fiber furthest away from the neutral axis is 2 inches, and no load must be applied to those fibers which, when calculated by the leverage (moment) of that force and the leverage of the fiber, cannot be carried by the fiber without loading it beyond its elastic limit, or to the proper factor of safety. Thus, in the beam 2 inches deep, the distance of the extreme fiber from the neutral axis is 1 inch. In the 4-inch beam (C) the distance is 2 inches, etc.

Section Modulus.

For the purpose of readily calculating beams and for comparing one with another, the want of some coefficient or constant was felt, whereby one section could be compared directly with another section without previous calculation. When one beam is to be compared with another, as shown above, it is necessary to multiply the width by the cube of the depth, a very unhandy method. But the moments of inertia may be compared if they are divided by the distance from neutral axis to the furthest fiber, thus forming a very convenient method of making the necessary calculations for finding the strength of various shaped beams or for ascertaining the proper size of beam for a given load.

Some name had to be given to the new characteristic of beam sections, and it chanced to be called the "section modulus" which is perhaps as good a name as any and a much better one than "moment of inertia." It depends entirely upon the size and shape of the section and is independent of the material, length, or load of the span.

If the moment of inertia be divided by the distance of the farthest fiber the result will be the "section modulus," and if the section modulus be multiplied by the stress permitted in the extreme fibers the result will be the resisting moment of the beam or lever. As the resisting moment always equals the bending moment (unless the beam breaks) then the section modulus can be readily found by simply dividing the bending moment by the fiber stress. Or, by multiplying the section modulus by the fiber stress, the bending moment is found.

THE BENDING MOMENT.

Referring again to Fig. 71, the load *c*, applied to the rod, if multiplied by one-fourth the distance between *c* and *d*, will be the the bending moment. If the load is applied at one end, as in the case of a lever, then the bending moment will be the load multiplied by the length. If the beam is in a floor where it is uniformly loaded, the bending moment is one-eighth of the load times the leverage, or distance between supports. Thus, if a channel-iron or I-beam is to be used, the bending moment may be divided by the fiber stress permitted—12,000 to 15,000—and the section modulus is obtained from which the size and shape of the beam most convenient may be directly taken, and a choice may be had of any structural shape listed in the maker's catalog.

If wood is to be used for the beam or lever, divide the bending moment by the stress permissible in the fiber, and the section modulus is obtained of a section which will do the work. But the moment of inertia and section modulus are more frequently used for structural shapes, although wooden beams are also calculated in that manner, particularly in machine design, for levers, frames of machines, and for similar work.

CALCULATING A BEAM FOR GIVEN WORK OR LOAD.

Should the millwright find need for timbers to support a machine weighing 10,000 pounds, as shown by Fig. 73, the distance between supports being 15 feet, what width and depth of timbers would be required? The conditions in this case are those of a beam supported at both ends and loaded in the middle. As there are to be two timbers or beams, the load on each will be 5000 pounds. Multiplying the distance between supports by the load, and dividing by 4, gives 5000×15÷4=18,750, the bending moment of the beam. But this quantity is in foot-pounds, and we desire it in inch-pounds, hence it is necessary to multiply by 12: 18,750×12=225,000 inch-pounds. To obtain the section modulus of a timber which would safely carry the load, it is only necessary to divide 225,000 by the safe fiber stress of the material from which the beam is to be made. As different materials have different strengths, it is necessary for the millwright to be provided with a table giving the strengths of various materials, wood, steel, etc. The values of steel sections may be obtained from the pocket-books issued by any of the steel manufacturers, one or more of which books should be in the possession of the millwright.

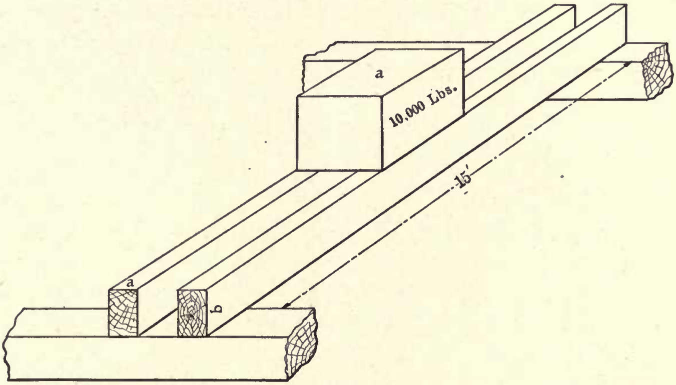

FIG. 73.—CALCULATING A BEAM TO CARRY A GIVEN LOAD.

BREAKING STRENGTH OF TIMBER.

The strength of wood is also given in the books in question, also in Trautwine, of which every millwright should have a copy. A brief table of average "moduli of rupture" is given below. This quality is the unit stress observed when the timber was broken in a testing machine, and it is a more convenient form to use than the ultimate strength of the material.

Taking the extreme fiber stress as one-fifth the amount given in the table, for spruce the fiber stress would be 1000, while for yellow pine it would be 2500 pounds to the square inch. It will be assumed that yellow pine is to be used for the timbers and we divide the inch-pounds by the extreme fiber stress and obtain 225,000÷2500×90, which is the section modulus of the timber required to carry the load.

From tables of beams, and in a previous paragraph, it is found that the section modulus of a rectangle, like C, Fig. 72, is one-sixth of the width times the square of the depth of the beam. Or, the breadth times square of the depth=90×6=540. We may now find the depth by assuming a width and calculating the depth required by that width, as, by once having found the section modulus, we can find any number of sections of beam which will have the same strength. We can also use the section modulus in substituting steel beams, as will be determined later.

TABLE III.—MODULI OF RUPTURE.

Timber.	Average.
Spruce	5,000
Hemlock	4,500
White pine	8,000
Long-leaf (yellow) pine	12,000
Short-leaf pine	10,000
Douglas spruce	8,000
White oak	13,000
Red oak	11,500

Calculating a Beam.

Assuming that the beam is to be 6 inches wide, the depth will be the square root of 540÷6=90, and as the square root of 90 is nearly 9½, it will be seen that 6x9-inch timber is not quite large enough; 6x10-inch should therefore be selected for the work. But supposing that a timber 8 inches wide be selected. Then the depth will be 540÷8=67½, and the square root of this is about 8¼ inches. An 8x8-inch would be a little small, but it would not change the factor of safety greatly, so either could be used as the sizes chanced to be on hand. The 8x8 inch timber has a section of 64 square inches, and the 6x10-inch has an area of 60 square inches, therefore it is cheaper as far as lumber is concerned to use the latter size.

For observation, calculate the depth required were a 4-inch timber used: 540÷4=135, and the square root of this is 11.6 inches nearly, showing that a 4x12-inch timber would carry the load as well as a 6x10-inch. Even if nothing was at hand but

2-inch plank, the millwright could put in: 540÷2=270, the square root of which is about 16½ inches in depth for the timber. This would need staying sidewise, but it would carry the load and it would only call for 33 square inches of lumber section. In this manner the millwright can, by using the section modulus, take his choice of several timber sections to do the work acceptably and at the same time appear as good-looking as possible when executed.

Should it be required to use structural steel instead of wood, the same bending moment is used, viz: 225,000, but a fiber stress of 15,000 will be allowed for steel, giving a quotient of 15. Multiplying this by 6, as before, gives 90 as the width and square of depth product. But the width and breadth business will not work with steel, and we must get out our steel handbooks and look up the section modulus of the shape it has been decided to use. Here we find that even the multiplying by 6 is not needed, and that by looking up under I-beams the one having a section modulus of 15, we find that an 8-inch beam weighing 20½ pounds to the foot will fill the bill.

If we wish to put in channels instead of I-beams look for the one which has a section modulus of 15, and it is found to be a 10-inch, weighing 20 pounds to the foot. Truly the understanding and use of the section modulus and the moment of inertia will be a great help to the millwright who has machine settings to rig up. In the above problem it is understood that two similar beams or timbers will be required, as the figuring was done for only one-half the load of 10,000 pounds.

Crushing Strength and Compression.

The crushing strength of material is very easy to handle or to calculate. It is given directly in pounds to the square inch or square foot, and it is only a question of enough area to carry the given load. Wood will usually carry about 800 pounds to the square inch on side grain before crushing, and in putting up frames for machines and for buildings, the millwright should see that all pieces have enough surface bearing to carry the load with a fair factor of safety. In Fig. 73, the timbers which carry load *a* must at each end transfer to the foundation timbers at least 2500 pounds besides their own weight. To give the bearing surface a factor of safety of five will require that the surfaces are not loaded more than stated by the following table of "limiting unit stresses" compiled from a bridge specification for combination bridges by The Baltimore & Ohio Railroad Company.

LIMITING UNIT STRESSES.

Timber. Pounds to the square inch.	Yellow Pine.	White Pine.	White Oak.
Bearing, with grain	1500	1000	1200
Bearing, cross grain..........	350	200	500

By this table, the timber-bearing surface at each end should be 2500÷350=7.14 square inches on yellow pine, 2500÷200=12.5 on white pine, and 2500÷500=5 inches on oak. Should 4x12-inch timbers have been used, it would be necessary that they project across the bearing timbers at least 2 inches for the yellow pine, 3 inches for white pine, and 1¼ inches for oak. The millwright should watch this point very carefully when placing machinery loads on wooden bearings or blocking.

The loads necessary to crush a bearing surface, across the grain, to a depth of 1/10 of an inch, are, according to Watertown tests for the U. S. Government, 2600 pounds for Georgia pine, 1200 pounds for white pine, and 4000 pounds for oak. Spruce will stand about as much as white pine. When it is necessary to put wood into shaft friction clutches, it is well to keep these figures in mind and to figure what load is coming upon the wood while the clutch is working.

Bearing Power of Bolts and Daps.

When two timbers are bolted together, the same thing comes up. Washers bearing upon side wood must not be loaded to more than the figures given will allow. Bolts, too, are frequently so arranged that they are dragged into the wood by a load which should have been carried otherwise. Fig. 74 shows several examples of good and bad bolt arrangement. At *a* a timber is shown held to post *e* by nothing except the pressure between the timbers and the carrying power of the bolt upon the wood, in post and in timber. This is a very bad arrangement as will be shown later.

The arrangement shown at *b* is properly arranged. The load which may be safely placed on this timber without danger of crushing the side fibers is, for an 8x8-inch timber with a dap 1 inch deep, white pine bearing on a yellow pine post, 8×200=1600 pounds—and it should not be loaded greater than that amount if for machinery-supporting timbers. But something may be gained by using different kinds of wood. Let a stick of yellow pine be placed at *b,* and a white pine post used instead of the arrangement noted above. Then the yellow pine beam can stand 8×350=2800 pounds, instead of 1600. The pine wood in the post must carry the same load it did before, but the strain comes on the end grain of that wood which, by the table, can carry a load of 1000 pounds on its end grain, while it will stand for only 200 pounds on side grain. Thus, the load on the post comes upon end wood and can, therefore, carry many times the load required of it.

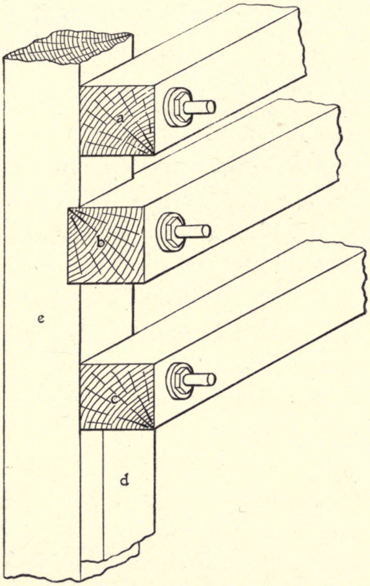

FIG. 74.—BEARING POWER OF SIDE-WOOD ON BOLTS AND "DAPS."

When the dap is omitted, and the piece of scantling or plank is placed as shown at *c,* Fig. 74, the safe load to be placed upon that form of construction is, supposing a 2x8-inch scantling to have been used, 8×2×350=5600 pounds. Even for a white pine beam at *c* the safe carrying power would be 2×8×200=3200 pounds. When extra strength is necessary, the dap can be reinforced with the scantling, and the carrying power of the connection be increased to the sum of the loads found for *b* and *c*, amounting to 4800 pounds for white pine and 8400 pounds for the yellow pine. In this manner a post and beam connection may be made to carry almost any load. Certainly such an arrangement will carry any stress likely to be met with in machinery setting.

Effect of Side Overload on Bolts.

As noted above, the connection at *a*, Fig. 74, is a very poor one when much load is to be carried—particularly when a live load like that of moving machinery is to be sustained. The effect of such a bolt connection is shown by Fig. 75, a sectional view of the same lettering in the preceding engraving. The beam *a* was originally located at *b*, and has settled to the position in which it is shown. To sustain the load, aside from the friction between *a* and *c*, which is negligible as the bolt gets loose, there is nothing but the bearing of the bolt against the wood surfaces. It will be noted that the bolt is out of place more in *a* than in *c*. This is because the bearing of the bolt in *a* is on side wood which crushes much easier than does the end wood against which the bolt bears in post *c*.

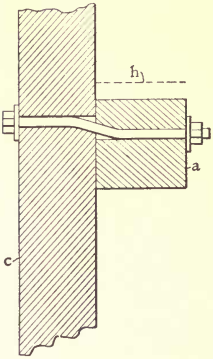

FIG. 75.—EFFECT OF BOLT OVERLOAD.

When the timber first commenced to settle, the bolt bore only across the extreme corner of the wood. After a little pressure had been exerted, the bolt obtained a bearing of about 1 inch of its length, which held until the load crushed the few fibers bearing against the bolt. Then the settling of the beam *a* continued until the bolt was bent down as shown, and the fibers had crushed until a sufficient number of inches of bearing had been obtained to carry the load.

The millwright here has an excellent opportunity to study the reason—or one reason—why framing put up in this manner is so long in coming to its bearings, why it settles continually, and never seems to reach a place where it can stay put. The reason is easily found. It is in the continuous settling of the fibers against which the bolt bears in *a* and *c*. Such construction can never be made to stay in place, and shafting placed upon such framing will be continually getting out of level and alinement, no matter how often it is put in place. Use the dap or slab methods, as shown by *c* and *d* Fig. 74, and the shafting will always stay where you left it.

BEARING PLATES.

When it is necessary to make a timber carry a heavy load with but little area of bearing upon its supports, then the same method must be employed as when heavy weights must be supported upon soft ground. In that case a foundation was pre-

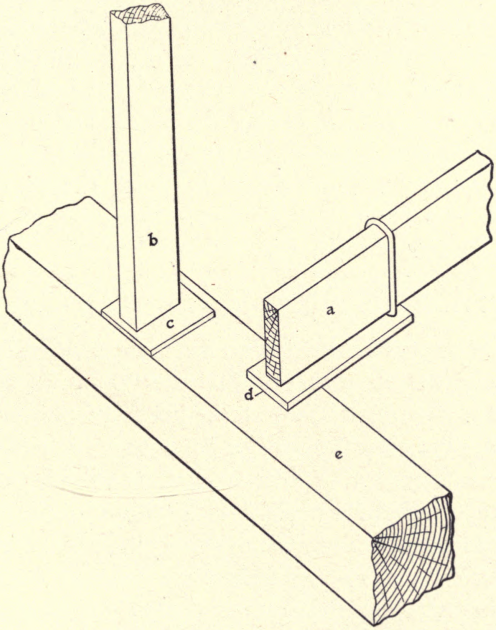

FIG. 76.—BEARING PLATES.

pared which distributed the load over the amount of soft soil necessary to carry that load. Exactly the same thing must be done by the millwright when he must place more than a crushing load upon a side of a timber.

As shown by Fig. 76, a metal plate must be interposed between the two wooden surfaces to distribute the load over the area necessary to carry it. The same thing is done when a washer is placed under a nut which is to be screwed down upon a wood surface. At *a,* Fig. 76, is shown a beam or joist with a very slight bearing on timber *e,* the surfaces in contact being far too small to carry the load to the square inch which must come upon them. The solution of this problem is to calculate the number of inches of area necessary between *a* and *e,* then form the metal plate *d* to have the required bearing surface upon timber *e.* To prevent the fibers in *a* from being crushed, simply extend the plate underneath *a* to a distance which secures the area of contact needed, then hang up the far end of *d* by means of a U-bolt or some other adequate device.

The problem is an easier one when end wood is to be presented to timber *e* as at *b,* where the load upon post *b* is great enough to crush in *e,* but will not injure the end wood in *b.* In this case it is necessary merely to calculate the area of a plate large enough to protect *e,* then set post *b* on top of that plate *c,* and nothing further is required.

TIMBER-CRUSHING JOURNAL BEARINGS.

Trouble is sometimes met with in some bearings which persist in cutting deeply into the timbers upon which they rest. When this is met with, investigate the bearings and see if they are not like that shown by Fig. 77, with a narrow rim around the lower edge as shown at *a* and *b.* Journal boxes made in this manner were originally intended to be bolted to steel beams or to other metal parts. They were never intended to be attached to wood. But the machine manufacturer, finding that these bearings are considerably cheaper than the solid foot variety, sends them out for wood as well as for iron construction, hence the trouble of their cutting into the timbers, as described.

When bearings of this kind are met with, three courses are open: The bearing may be turned upside down and the space filled with a piece of wood laboriously fitted in to the corners and rough places. That is one way. Another is to fill the cavity full of babbitt metal—a sure way, but a costly one. A variation of this way is to fill the cavity with pieces of wire, nails, and other small bits of scrap, then pour in thin cement or melted brimstone, strike the top off level and let stand until set, then bolt the bearing in place with the cement smoothly fitting to the woodwork. The third method is to place a plate of iron under the bearing—a modification of the plate method, Fig. 76—and then bolt the bearing fast upon the plate in question. The cement method is preferable and leaves little to be desired—except a better box-foot to begin with.

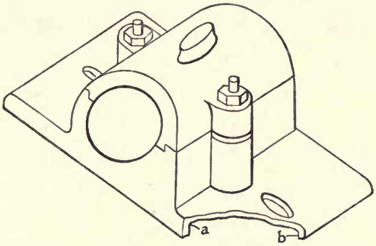

FIG. 77.—A BEARING WHICH CRUSHED INTO THE TIMBER.

SHEARING STRENGTH OF TIMBER.

One more property of timber—and of steel as well—the millwright should thoroughly understand and that is, the strength of wood and of steel as regards shearing. About every operation in wood and in iron working (by cutting) is done by shearing off some of the material. The chisel acts by shearing, the drill shears up some of the metal, and the bit bores wood by shearing off a chip of uniform thickness.

A boiler often fails by some of the rivets shearing off, and in a timber truss, as well as in every beam, shear is the most common manner of failure. Lumber seldom or ever fails by shearing across the grain. A break in that direction is usually a break due to tensile strain. When a pin fails in a mortise, it is usually the case that the tenon shears, a piece being pulled out of it. Should the pin be torn off, the break would be shear, pure and simple, and if the pin broke twice, once on either side of the tenon, it would be said to have been in double shear. The same is the case with rivets, whether in tin or in steam boiler, and when they are in double shear they have double the resistance that they have in single shear.

Wood fails in shear almost entirely with the grain. It splits or slides off through endwise pressure, as shown by Fig. 78, which represents a portion of the foot of a truss. When a framed timber of this kind fails it does so by shearing off the wood along the lines *a b c d,* pressure being exerted in the direction *P.* The force necessary to strip off the wood above the dotted lines is not affected by the thickness of the wood above that line, but depends entirely upon the kind of wood and the length and breadth of the piece to be sheared off. The following table gives the strength in shear of the principal woods used in millwrighting:

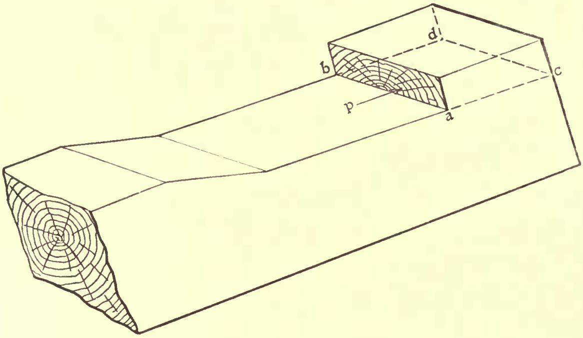

FIG. 78.—SHEARING STRENGTH OF TIMBER.

SHEARING STRENGTH OF TIMBER

Hemlock	300	pounds to the square inch.
White pine	400	“ “ “ “ “
Yellow pine (long leaf)	850	“ “ “ “ “
Yellow pine (short leaf)	775	“ “ “ “ “
Douglas spruce	500	“ “ “ “ “
White oak	1000	“ “ “ “ “
Red oak	1100	“ “ “ “ “

The shearing strength of wood across the grain is probably four to six times the amounts given above, but wood seldom fails by shearing in that direction.

Were the timber shown by Fig. 78 made of white pine, and the section *a b c d* exactly one inch square, it would require 400 pounds applied at *P* to split the timber along the dotted lines. Were the space *a b c d* one inch wide and two inches long, or two inches wide and one inch long, the power required to do the shearing would be 800 pounds, showing that the resistance of the wood is exactly according to the area to be sheared. Thus, were the space *a b c d* 10x10 inches, it would require 40,000 pounds pressure at *P* to shear off the material above the dotted lines.

Holding Power of Joint-Bolts.

The holding power of any joint-bolt is calculated by combining the compression and shear strains as above laid down. Joint-bolts are a nuisance to begin with, and they should never be used when there is any way of getting rid of them. The usual joint-bolt is much like any bolt except the end is pointed to enter the nut easily, and the nut is usually made square to prevent its turning around in the mortise. The hole is bored ⅛ inch larger than the rod for joint-bolts (holes for ordinary bolts are usually bored 1/16 inch larger than the rod or body of the bolt for sizes below 1 inch, and ⅛ inch larger for sizes greater than 1 inch in diameter) in order that the bolt, possibly a little crooked, may be turned around in the hole and nut.

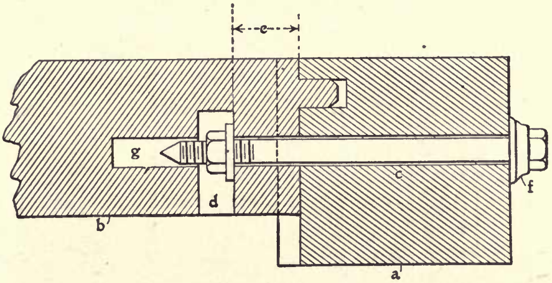

FIG. 79.—HOLDING POWER OF JOINT-BOLTS.

As arranged in Fig. 79, the joint-bolt *c* is slipped into the hole *g,* bored as above described to receive the rod or shank of the bolt. Hole *g* is intercepted by the mortise *d,* which has been beaten in the inside of timber *b;* and the distance *e,* from the mortise to the end of timber *b*, must be considered. A cut washer should be placed under the nut, and it is usual to place a cast washer under the head, as that end of the bolt, bearing on side wood, needs a larger bearing surface than does the nut which bears against end wood.

Considering the joint-bolt c, Fig. 79, to be 7/8 inch in diameter, what sizes of washers are necessary to hold this bolt in a white pine frame with 8x8-inch posts and 6x8-inch girts? The general arrangement may be as shown by Fig. 79, the bolt being placed in the middle of post *a*, the mortise and tenon being merely to prevent lateral movement of timber *b* during erection and while the bolt is loose. Thus the bolt is brought close to the inside of beam *b*, so the mortise need not be of great depth to receive the nut and washer. The washer to go over a 7/8-inch bolt must have a diameter of 15/16 inches, and as shown by the following table such a washer has a diameter of 2 1/4 inches. For convenience, the following table of cut washers is presented.

CUT WASHERS.

Diameters given in inches; Thickness in Birmingham wire gage; Number of washers to the pound.

Diameters in Inches.		Thickness, B.w.g.	Number in One Pound.
1/2	1/4	18	450
5/8	5/16	16	210
3/4	5/16	16	139
7/8	3/8	16	112
1	7/16	14	68
1 1/4	1/2	14	43
1 3/8	9/16	12	26
1 1/2	5/8	12	22.5
1 3/4	11/16	10	13.1
2	13/16	10	10.1
2 1/4	15/16	9	8.6
2 1/2	1 1/16	9	6.2
2 3/4	1 1/4	9	5.2
3	1 3/8	9	4
3 1/2	1 1/2	9	2.8

The bolt *c*, Fig. 79, being fitted with a washer 2 1/4 inches in diameter, and the bolt hole being 1 inch in diameter, the bearing of the nut will be upon the area of end wood contained between the two circles mentioned. These areas may be calculated, but it is better to take them directly from a table of circles which is to be found in every handbook. Thus found, the areas are 3.97

and 0.7854. Taking one from the other, there is an area of 3.18 square inches to withstand the strain of the bolt which is limited to 5000 pounds; or 5000÷3.18=1572 pounds to the square inch.

From the table of crushing strength of wood it is found that white pine will crush its end fibers under a load of 1000 pounds to the square inch. There is, then, power enough in the screwing up of the bolt to crush the wood under the washer, and the design is not a good one. Some other wood should be used for the girts, or else a larger washer should be made and used. For cases of this kind, it is sometimes the fashion to cut off pieces of flat iron which will just pass easily into the mortises. These pieces are drilled and tapped and used as nuts for the joint-bolts. Were this to be done in the case above noted, there would be secured $2\frac{1}{2}\times4=10$ square inches of bearing surface, or about 9.21 square inches after the area of bolt hole has been deducted, leaving 9.21 square inches of bearing surface, equal to 5000÷9.21 =542 pounds to the square inch, thus giving a factor of safety of about 2.

RESISTANCE TO SHEARING.

Another point which would be investigated is the possibility of pulling the cut washer through the end of girt *b,* Fig. 79. The circumference of the $2\frac{1}{4}$-inch washer above mentioned is (taken from the table of circles) 7.07 inches, and the shearing strength of pine wood being 400 pounds to the square inch, each inch length of timber in *e* would carry $400\times7.07=2830$ pounds. Hence, to just carry the load, there should be 5000÷2830=1.77 inches of wood. But there is no factor of safety in this, and to provide a factor of safety of 2 (about the same as for the crushing strain in the preceding paragraph) there should be 2×1.77 =3.54 inches of wood. Therefore, the distance *e* should not be less than $3\frac{1}{2}$ inches.

We have not yet investigated the bearing of the washer on the outside of post *a,* Fig. 79. Sometimes cut washers are used at this point, again cast washers are used as occasion requires. With a cut washer, the strain will be the same as for the nut end of the bolt, or 1572 pounds to the square inch. Here is trouble: Pine wood will crush under a load of 200 pounds to the square inch across the grain, hence to carry 5000 pounds there should be 5000÷200=12½ square inches. And with a factor of safety of 2, there would have to be 25 square inches to make this part of the work as strong as the rest. This means a washer nearly 5¾ inches in diameter.

It looks as if it would be better to use some other kind of wood for the posts of this frame. As yellow pine stands 350 pounds side-grain pressure, and oak is good for 500 pounds, the size of the washer necessary to carry the strain of a ⅞-inch bolt on the latter wood may be reduced to 254 or 2½ inches. If the yellow pine timber is used, the washer should be 3.63 inches in diameter, or about 3⅝ inches. Thus it is found that the cut washer 2¼ inches in diameter is still too small, even with oak posts, and it is in order to use cast-iron washers of larger diameter.

The following table of cast-iron washers was furnished by The Fairbanks Company, and the list has proven satisfactory during several years' use:

CAST WASHERS.

Diameters and Thickness in Inches.			Size of Bolt.	Weight in Pounds.
Washer.	Hole.	Thickness.		
$2\frac{1}{2}$	$\frac{5}{8}$	$\frac{11}{16}$	$\frac{1}{2}$	$\frac{1}{2}$
$2\frac{3}{4}$	$\frac{3}{4}$	$\frac{3}{4}$	$\frac{5}{8}$	$\frac{5}{8}$
3	$\frac{7}{8}$	$\frac{13}{16}$	$\frac{3}{4}$	$\frac{3}{4}$
$3\frac{1}{2}$	1	$\frac{7}{8}$	$\frac{7}{8}$	$1\frac{1}{4}$
4	$1\frac{1}{8}$	$\frac{15}{16}$	1	$1\frac{5}{8}$
$4\frac{1}{2}$	$1\frac{1}{4}$	1	$1\frac{1}{8}$	$2\frac{1}{4}$
5	$1\frac{3}{8}$	$1\frac{1}{8}$	$1\frac{1}{4}$	3
6	$1\frac{3}{4}$	$1\frac{1}{4}$	$1\frac{1}{2}$	5

The table shows that a cast washer for a ⅞-inch bolt has an outside diameter of 3½ inches, with a hole 1 inch in diameter through it. This leaves 6.9211—0.7854=8.83 square inches of bearing surface to carry a load of 5000 pounds, or 866 pounds to the square inch. Hence even with a cast washer on an oak post, there would be too much pressure to the square inch. If so large a bolt must be used, a 5-inch washer must be made and used as noted above, but there may not be any need of so much holding power, especially as the timbers are only 8x8 inches, and 6x8 inches.

A ¾-inch bolt would probably do all that is required, or possibly a ⅝- or even a ½-inch affair might give the necessary clamping power. The above calculations are given, not because there might be need of a ⅞-inch bolt in the small frame described, but to make clear to the millwright the necessity for so designing the several parts of the work he is doing that there will neither be a weak spot in one place or a useless expenditure of material in another part of the work. With a little thought in the lines indicated above, the stresses in compression and in shear, as well as those of tension and transverse loads may be easily determined and met by suitable material rightly placed. This is where the "materials and forces of nature" come into play, as described in the first chapter.

Strength of Ironwork.

The strength of ironwork is calculated in much the same manner that woodwork is figured. Of the two, ironwork is the easier to handle, for the material is more uniform in strength, more condensed, and lends itself easier to the necessary calculations. The matter of bolts is pretty well covered in the paragraphs above, though a table of the safe loads of bolts is very handy and saves much time, and such a table, as prepared by the writer for his own use, is given herewith. This table is calculated for a tensile strength of 60,000 pounds to the square inch, United States Standard thread, with a factor of safety of 5 based upon the diameter of the bolt at the bottom of the thread.

DIAMETER, PITCH AND STRENGTH OF BOLTS.

Diameter in Inches	Diameter at Bottom of Thread	Threads to the Inch.	Safe Load in Pounds.
¼	0.185	20	323
5/16	0.240	18	542
⅜	0.294	16	737
7/16	0.344	14	1,118
½	0.400	13	1,515
9/16	0.454	12	1,940
⅝	0.507	11	2,424
¾	0.620	10	3,645
⅞	0.731	9	5,010
1	0.837	8	6,610
1⅛	0.940	7	8,350
1¼	1.065	7	10,100

Bolts usually fail by breaking in the thread, and when great strength is required, the ends of the bolts are upset until the diameter at the bottom of the thread is the same as the diameter of the body of the bolt. But this treatment does not give full strength, for upsetting does weaken the metal, and many tests of bolts in a machine have demonstrated that bolts upset until the bottom of the thread is as large as the rod still fail by breaking in the thread.

In order to secure full rod strength in an upset bolt, the millwright must see that the bolts are upset more than will give full bolt size. For a 1-inch bolt, the steel should be upset to 1⅜-inch diameter, giving a diameter at bottom of thread of 1.16 inches. For a ¾-inch bolt, the upset and thread-bottom diameters should be 1 inch and 0.837 inch respectively. A ½-inch bolt should be upset to ¾ inch and the thread should cut to 0.620 inch in diameter.

Bolt Failure by Shearing.

Bolts do not always fail by purely tensile stress. Under some conditions, bolts fail by shearing, the heads being torn off as shown at *a,* Fig. 80. At first sight it would appear as if this were a tensile failure due to the weakening of the steel fibers by upsetting the metal during the formation of the head. Doubtless the metal was weakened in this manner to a certain extent, but the failure of the bolt as shown is due to a combination of both tension and shearing strains.

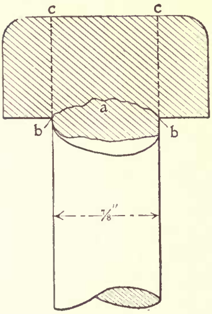

FIG. 80. SHEARING STRAINS IN A BOLT HEAD.

In the ⅞-inch bolt described above, and which was under 5000 pounds tension, there was a tendency of the bolt to pull through the head along the dotted lines *b c*. The diameter of this bolt being ⅞-inch, its circumference is 2¾ inches, hence each inch of the circumference along the lines *b c* is under a shearing stress of 5000÷2.75=1820 pounds. As the shearing strength of soft steel is about 80% of its tensile strength, or about 48,000 pounds to the inch, the thickness of the bolt head in order to barely hold itself against the shear, would be 1820÷48,000=0.038 inches.

As the hexagonal head of a ⅞-inch bolt is actually 0.725 inch. the shear area would be 2.75×0.725=2 nearly, hence there is 2 square inches of metal to carry 5000 pounds of shear stress, or about 2500 pounds to the square inch. As each inch is good for 48,000, the bolt will have a factor of safety against shear of over 19, consequently there is little likelihood of the head stripping off the rod along the lines *b c*. But the presence of shear, and the leverage of the edges of the head, is probably what gives the conical shape to the break at *a*, which is almost always observed when a bolt head is pulled off by direct stress. And the thinner the head the more cone-shaped will be the break *a*.

By making use of the hints given above, the millwright will be able to work out the several stresses present in machine erection, and the strains must be opposed by adequate arrangements to carry them. It is the lack of comprehension of the strains ever present, and the lack of proper timbering to absorb, oppose or carry the several strains, which makes the shackly, insecure and flimsy character of the millwrighting frequently met with in some mills.

CHAPTER XI.

LAYING OUT SHAFTING.

"How big a shaft is needed to carry 100 horse-power?" This question is asked of the millwright many times during the year, and sometimes the millwright, too, has hazy ideas regarding that important matter. The size of shaft necessary to transmit 100 horse-power depends of course upon the speed at which it revolves. If the speed of any shaft be doubled, it will carry twice as much power. This rule applies to belts and to pulleys, as well as to shafts.

The speed of a shaft is, then, an important factor in laying out a power transmission. The proper speed for any layout is that which will permit the required speeds to be obtained without the use of excessively large or very small pulleys. If a lot of fan blowers or fast running generators (electric) were to be driven, the shaft should be given a higher speed than if paint mixers and foundry tumbling barrels were to be handled.

HORSE-POWER OF SHAFTING.

For general mill work, 150 to 300 revolutions a minute for shafting covers the usual practise and 200 is the usual speed used by the writer unless conditions call for some other speed. The use of tables for determining the size of any shaft for certain work is not very good practise although it does well enough for secondary shafts, counters and very light line shafts. For such work, a fairly good rule is to multiply the cube of the diameter by the number of revolutions a minute and divide the product by 90. The quotient will be the number of horse power the shaft should transmit safely. If the diameter of shaft is to be found, assume a speed at which the shaft is to run. Then multiply the horse-power by 90, divide by the number of revolutions and extract the cube root of the quotient.

By algebra: $d^3=\frac{90\times HP}{R}$, $R=\frac{90\times HP}{d^3}$, $HP=\frac{d^3\times R}{90}$, where

HP=horse-power,
d=diameter of shaft, and
R=revolutions to the minute.

In hanging shafting, the bearings should be so arranged that the deflection will not be more than 1/100 of an inch to each foot of length. This deflection is to include the pull of belts, the weight of pulleys and every known load which can be placed upon shafting. The stiffness of a shaft is not the strength by any means. A wire cable may have strength enough to do all the work of a shaft, but the cable does not have the stiffness necessary to carry a load of pulleys and pulls, therefore it would be of no use as a shaft.

Torsion in a Shaft.

We meet with a new form of stress when shafting is to be dealt with, and in addition to tension, compression and transverse strains, we have the new one of torsion, or twisting. But this is an old acquaintance under a new name, for the strains produced in any material by torsion are those due to shear, and by nothing else. When a severe load causes a shaft to break, the strains set up in the shaft are those of shear entirely. No other strain is present except that of the transverse load due to the weight of the shaft and the pulleys located upon it.

The amount of torsion in any shaft should not be enough to permit a deflection of more than one degree in 30 diameters of the shaft. That is, a 2-inch shaft 5 feet long shall not twist more than one degree when under full load, with the power applied at one end and taken off at the other end of the shaft. It means that a 2-inch shaft would have to be 1800 feet long before the allowable twist would allow it to make one complete revolution.

The bending of any shaft is calculated exactly as if it were a beam and the weight of the shaft constitutes a uniform load while the pulleys and the belt pull constitute position loads and they are figured accordingly when seeking to ascertain the diameter of shaft necessary to span a required distance within the allowable deflection.

Twisting Moment of Shafts.

The load upon any shaft is called the "twisting moment" and it is found by adding together the products of the radii of all the pulleys after each has been multiplied by the belt pull upon each pulley. All the pulleys that take power from the shaft are to be thus treated, while the pulley which delivers power to the shaft is to be treated in a similar manner, but by itself, and the product of that belt pull and the radius of its pulley will be found to equal the sum of all the other belt-radius products. Thus the greatest twisting moment will be found between the driving pulley and the power pulley next adjoining that pulley, but the bending or twisting power may be divided at the drive pulley by a portion of the stress being delivered to pulleys on either side of the driving pulley.

Torsional Stress.

When a twisting moment exists in any shaft (by twisting moment is meant that the actual twisting force at the rim of the pulley is equal to the force called "twisting moment" which acts one inch from the center of the shaft, or acts with a one inch leverage) the stress thus set up is known as "tortional" stress, and, as stated, is a purely shearing stress, as illustrated in a flange coupling where the twisting moment tries to shear off the coupling bolts. The same action is trying to take place at every point in the shaft along its entire length. This torsional or shearing stress is resisted by what is known as the "resisting moment" which is equal to the sum of all the moments of the shearing stresses about the axis of the shaft.

It has been found that if the unit stress or working torsional strength of the shaft material be represented by S, a very close approximation of the horse-power of any shaft is:

$$HP = \frac{S\ d^3 n}{321{,}000},$$

where d=the diameter of the shaft; n, the number of revolutions a minute, and S, the working stress, say 10,000 pounds to the square inch. The above formula is based upon the supposition that where M=the twisting moment, $0.1963\ S\ d^3 = M$.

STIFFNESS OF SHAFTS.

The stiffness of a shaft depends upon the coefficient of elasticity of the steel, and that matter like others of its kind the millwright must study in books devoted to that subject, as it is too tedious a subject to permit of its being discussed here to any length, but briefly stated, the stretch of any shaft or piece of metal depends upon its coefficient of elasticity, which is taken as follows by some authorities:

COEFFICIENTS OF ELASTICITY.

MATERIAL.	AVERAGE COEFFICIENT.	
Steel	30,000,000	pounds to the square inch.
Wrough iron	27,500,000	" " " " "
Cast iron	15,000,000	" " " " "
Timber	1,800,000	" " " " "

That is, the unit stress divided by the unit stretch will equal the coefficient of elasticity. Or a bar of steel (a rod) 7/8-inch in diameter and 20 feet long is loaded with 5000 pounds pull: How much does the rod stretch? The solution of this problem will be to multiply the pull by the length of the rod, and divide the product by the area of the rod times the coefficient of elasticity. If the sectional area of the rod is $S=0.6$ inch, and the length $L=20^1\times12=240$ inches, and the coefficient of elasticity $E=30,000,000$ pounds the stretch of the rod is found as follows: Deflection $D=\frac{P\ L}{S\ E}=\frac{5000\times240}{0.6\times30,000,000}=0.0667$ inches, the stretch of the rod under the given conditions.

COEFFICIENTS OF ELASTICITY FOR SHEAR.

The same rule is applied to the torsion of shafts, and the coefficients of elasticity for shear are about two-fifths the regular coefficients of elasticity, thus, for steel, 11,000,000 pounds, for wrought iron 10,000,000, and for cast iron 6,000,000 pounds, and this coefficient may be represented by E_1, and worked into the formula: $HP=\frac{S\ d^3n}{321,000}$. The letters have the same meaning as when that formula was used for ascertaining the horse-power, and it can be proven that when a 2-inch shaft is twisted under the load of 50 horse-power the angle a, through which this 20-foot shaft will be twisted, is: $a=\frac{584\,T\,L}{E_1\,d^3}=\frac{36{,}800{,}000HP\,L}{E_1d^4n}$

$$=\frac{36{,}800{,}000\times50\times240}{11{,}000{,}000\times16\times200}=12\frac{1}{2}\text{ degrees.}$$

The shaft 20 feet long would be 240÷2=120 diameters in length, and 120÷30=4, the permissible number of degrees the shaft could twist without getting outside the limit. As the twist is more than thrice the allowable number of degrees, it is evident that the shaft is overloaded and that the strain should be reduced or the diameter of the shaft increased.

In this manner, as barely indicated above, the millwright may "keep tabs" on the strength and stiffness of any shaft he is called upon to erect and by going more deeply into the subject he may soon fit himself to design shafts perfectly adapted to any demands made by given conditions. The few items of scattered information given above are merely to excite a desire for more knowledge of this important subject, and to induce the progressive millwright to study deeper into the matter.

FITTING-UP A SHAFT.

The size and length of a shaft having been decided upon, the millwright must couple up the several lengths and place the shaft upon the several timbers or piers prepared for it, as described in a previous chapter on page 132. The first thing is the coupling together of the shaft lengths. When drawings are made by a good engineer, he will so design the shaft that every piece has at least two bearings. It is pretty poor designing to find a shaft with a short coupled length passing through only one bearing.

The lengths of shafts used should depend upon their diameter, the number of pulleys, and the manner in which the shaft supports and buildings are arranged. It does not pay to put in pieces of 4 15/16-inches shafts 24 and 28 feet long, although shafts may be obtained of almost any length up to 40 feet. It is too much work to handle such shafts and shorter pieces should be used. No length of shaft should be laid down upon any drawing, except in extreme special cases, where the length of shaft is so great that it cannot be lifted by tackle attached in two places. Shafts which, when loaded with their pulleys and gears, will bend under their own weight when hung up from two points, as above noted.

are too long to be handled with safety, and the designer should look to this point and put in couplings enough to enable the shafting to be handled with safety after the pulleys have been put in place.

SHAFT DRAWINGS.

It is almost an absolute necessity nowadays to make a drawing of a shaft or a line of shafting. The day of marking off the length of a piece of shafting on a pole, and then sending the pole to the machine shop, has gone past. The shaft manufacturer wants a drawing of the shaft, simple though it may be, which shows everything which is to go on the shaft and which shows it in such a manner that no questions need be asked which the drawing and the accompanying specifications do not answer.

Fig. 81 represents the type of shaft drawings used by the writer. Drawings should be made about 24x36 inches, and several shafts can be laid down on the same sheet. The drawings should be made 1 inch to the foot, or, if there is very little on a shaft, it may be made ½ inch to the foot with larger details whenever necessary. The drawing here shown is for the main line of a factory fitted with a 125-h.p. Corliss engine which belts to the 60x20-inches pulley shown near the middle of the shaft.

It is the invariable custom of the writer when laying down a factory to number each and every shaft in the plant. Commencing at the engine, or at one engine if there be several, the shaft of that machine is marked with a figure 1 inside a small circle, thus: ①. The shaft to which the engine is belted is marked ②. Then each and every shaft which carries a pulley is given a number in the same manner, the several numbers being always in sequence, and no numbers are omitted. The shaft of each and every machine which receives power from any shaft is given a number, and that number is carried on the drawings, be they simple or elaborate, and it is also carried through the specifications, through the buyer's list and the erector's list, thereby forming a system which renders it impossible for any man to assemble the machinery of transmission in a wrong manner.

Referring to Fig. 81, it will be noted that the drawing is marked: "② Main Shaft *a, b, c,* (200 r.p.m.)" The number in the circle refers to the corresponding number on the drawings which

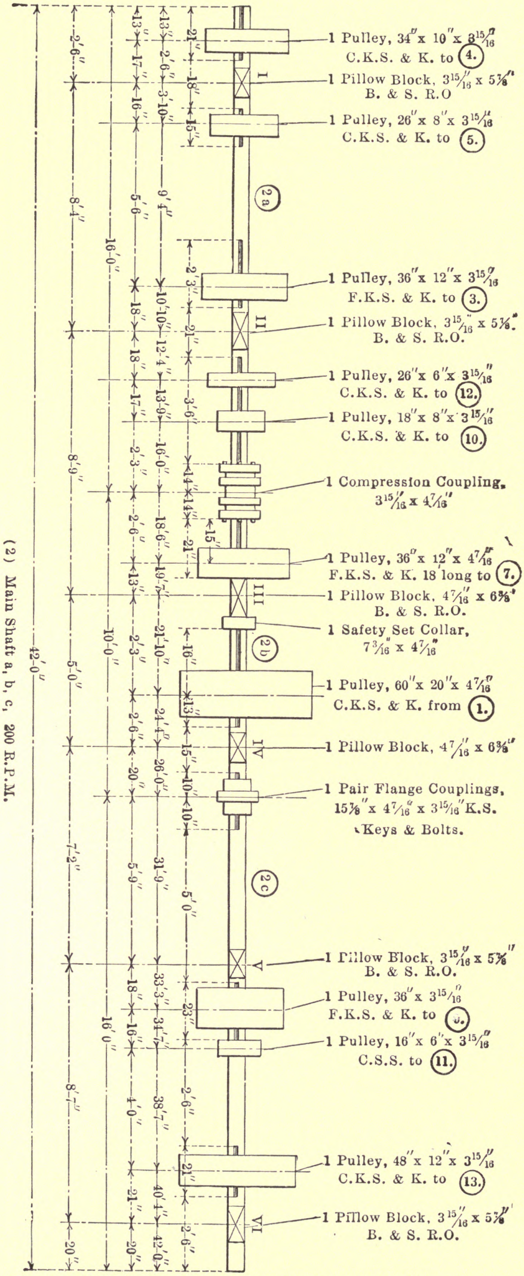

FIG. 81.—LAYING OUT A SHAFT.

chances to show the main line. The number "②" is also found in the several lists as will be shown hereafter. Next, the name "main shaft" speaks for itself, and is beyond contradiction or wrong interpretation. Next, in parenthesis, is the speed of the shaft (200 r.p.m.) settling the fact that the shaft is to run at that speed.

Next on the drawing comes a dimension line showing the total length of the shaft, and then comes another line of dimensions which shows the distances apart of the bearings. Nothing else is put in this line of dimensions, and when the millwright comes to erect the bridge-trees he need only look at this line of dimensions. He has no need of searching for the timber dimensions or distances among a dozen other figured distances. A single glance locates all the bearings from either end of the shaft, and ties them all to each other.

Then comes a line of dimensions—local dimensions they may well be called, for they extend from every pulley center to ends of shaft, to centers of bearings, and to the center line of building walls if there chance to be any. But the manner in which these dimensions are derived gives them great accuracy, and they form a never-failing check by which each of the other lines of dimensions may be verified. The figures in this line were obtained by scaling the drawing, of course, but not by scaling from one dimension line to the next. That method never fails to involve the millwright in error and vexatious delay. Instead of being laid down by scaling the drawing step by step, the dimensions in this line are really derived dimensions and they were all taken from the next line nearer to the shaft.

It is the invariable custom of the writer, either when taking dimensions for the purpose of making a drawing or when working from a drawing, to use fundamental dimensions, and to work at all times from the same point rather than working from one point to another. It is like the man cutting off bits of board to a pattern. As long as he marks them all from the same pattern, he will get the lengths somewhere uniform, but should the man saw off one piece and take that one to mark the next with the little piece of board last cut would probably need an introduction to the pattern should it ever happen to get next again.

The line of dimensions called the "local" dimensions, and, in fact all the other lines of figures, were derived from the second row of figures from the shaft. A beginning is always made from the end of the shaft the most convenient for this purpose, and the bearing nearest to the end chosen is marked I. The next bearing is marked II, the others III, IV, etc., to the other end of the shaft. In further drawing or designing operations, the end of the shaft nearest bearing I is always taken as a starting point.

All the shaft measurements in this case are taken from the end of the shaft, though in some cases they may be taken from a point at a distance from the shaft, or from some other shaft. Commencing at the end of the shaft, the millwright finds it to be 13 inches to the center of the first thing on the shaft, which happens, in this case, to be a pulley. The distance is marked in its place, and witness marks indicate the points or lines between which the measurement was made. To obtain the next dimension, which chances to be the center of a bearing, the distance is scaled, not from the center of the pulley, but from the end of the shaft from which the first measurement was taken. This distance is found to be 2 feet six inches, and it is so entered as close as convenient to the center line of the bearing and it will be noted that there is but one witness mark made for this dimension, and that one on the bearing center line. For the other end of this measurement, the witness mark made at the "beginning end" of the shaft still prevails.

The scaling and measuring is continued in this manner until the other end of the shaft has been reached, and the measurement to that point is found to be 42 feet. This gives the over-all dimension of the shaft without any figuring or adding of other dimensions. To obtain the "local" dimensions, it is only necessary to subtract the scaled dimensions one from another, and the several quotients are the "local" distances between each of the pulleys, the bearings, or between bearings and pulleys, as the case may be.

To obtain the dimensions in the second, or "bearing" row, it is only necessary to subtract from one another the dimensions found next to the witness marks at the ends of the shaft and at the several bearing center lines. For instance: the distance is required between bearing IV and V. Upon the line of scaled dimension is found the figures 24 feet 7 inches, and 31 feet 9 inches. Subtracting the former from the latter leaves 7 feet 2 inches, which is found to be the distance laid down between bearings IV and V. In this manner, by making a single subtraction the direct distance between any two of the "points" on the main shaft, Fig. 81, may be found without further scaling or calculation. It is a great "error-saving" method.

In the line of dimensions next to the shaft, and almost smothered among the pulleys, may be found another little row of figures. These are from which to obtain the length of each key-way. The machinist who makes the shaft must have this line of dimensions, or he invariably gets the key-seats just where you want to place a bearing. Then there is an opportunity, which you always take, of trying to fill key-seats with cuss-words.

Note that the key-seat dimensions are either "tied" to the ends of the shaft or to each other, so that in laying out the splining a man can begin at one end of a shaft and work along as far as the dimensions are found; then he commences at the other end of the piece of shafting and repeats the operation until he finds no more dimensions, whereupon he may quit that shaft in confidence that he has not overlooked any key-seats.

Upon the opposite side of the shaft, in Fig. 81, is found what may well be known as the "fool-killer's list." That list contains, in plain English, the name, dimensions, description, and its connection with other shafting if any, of each and every piece of machinery placed upon the shaft. In making the assembly of a shaft from a drawing as above, the millwright can safely leave the work to any man who can read. He cannot make a mistake unless he does it on purpose.

It has long been the method of the writer to make two lists of the material to be found upon the shaft, and upon other shafts in the same job. The first list, which may be known as "the erector's list," is as follows:

ERECTOR'S LIST.

(1) Engine, (85 R.P.M.)
   1 Corliss steam engine, simple, non-condensing, preferably 14x30 inches, but ample to give 100 indicated horse-power with 100 pounds boiler pressure, cutting off at ¼ stroke.
   1 Pulley, 120x20 inches, furnished with machine (to No. 2-b).

(2) Main line shaft, 3 15/16 and 4 7/16 inches x 42 feet (200 r.p.m.). In three pieces, *a, b, c.*
(2a) 1 Shaft, 3 15/16 inches x16 feet, 4 key-seats.
1 Pulley, 34x10x3 15/16 inches, C. K.S. & K. to (4).
43 feet of 10-inch, 8-ply I.S.C. belt (2a to 4).
1 Pillow-block, 3 15/16x5⅞-inches drop, B. & S. R. O.
2 Bolts, 1x14 inches, with nut and check nut, 1 cut and 1 cast washer 1⅛ inches in diameter hole.
1 Oil-cap and nipple, ⅜-inch pipe, 12 to 36 inches long, tapped into cap of journal bearing. No thread on upper end of pipe, the end being loosely closed by a ½-inch nipple screwed into a ½-inch cap and placed over the ⅜-inch pipe.
1 Pulley, 26x8x3 15/16 inches, C. K.S. & K. to (5).
48 feet of belt, 8-inch, 6-ply, I.S.C. (2a to 5).
1 Pulley, 36x12x3 15/16 inches, F. K.S. & K. to (3).
52 feet of belt, 6-inch, I.S.C. (2a to 3).
1 Pillow-block, 3 15/16x5⅞-inch drop, B. & S. R.O.
2 Bolts, 1x12 inches, with nut and check nut, 1 inch cast and 1 cut washer, 1⅛-inch hole.
1 Oil-cap and nipple.
1 Pulley, 26x6x3 15/16 inches. C. K.S. & K. to (12). and so on through the list.

At the end of the shaft *a,* the coupling is specified as:

1 Compression coupling, 3 15/16x4 7/16 inches, Shaw, or its equivalent (2a to 2b).

And in connection with compression couplings hangs quite a tale which will be told later. Another item is:

1 Pulley, 36x12x4 7/16 inches. F. K.S. & S.S. & K. 18 inches long to (8).

By this the millwright knows that the 36-inch pulley has a 12-inch face and is bored 4 7/16 inches. The letter "F" means that the face is flat or straight and "K.S." indicates that the pulley is to be key-seated. "S.S." shows that it is to be set-screwed as well, and "K. 18 inches long" indicates that a straight key is desired, 18 inches long, upon which the pulley can be moved at will by simply loosening the set-screws. Other pulleys are marked simply "K.S. & K.," or "C. S.S." or "F. K.S.," or "F. S.S.," etc., meaning that the pulleys thus marked are to be fitted with "key-seat and key," crowned face, set-screwed;" "flat face (straight) key-seated," or "flat face, set-screwed," as the letters indicate. The pillow-blocks are marked "B. & S. R.O." to indicate that they are "ball and socket, ring (or chain) oiling," etc., and to distinguish them from solid bearings the latter should be plainly specified as "1 rigid flat box" or "pillow-block," if you prefer. The belt is marked "I.S.C.," indicating the fact that it is to be "impregnated stitched cotton," or in other words, plain Gandy. But so many people have gone into manufacturing that kind of belting that the terms "Gandy, Original Gandy, Rub-Oil, Leviathan, Mount Vernon," etc., have become so numerous, and so mixed up are the originals, the substitutes, the paraffin-filled and the linseed-filled varieties, that no man can afford to call any particular name in the specifications. Let the millwright specify the "I.S.C." and select from them in accordance with the specifications for the different varieties of belting to be found on page 247.

The compression coupling is specified as "Shaw or its equivalent." Here is where another imitation has butted in. There are several double compression couplings on the market which to the casual glance appear to be exactly alike, but one particular method of bolt arrangement provides a coupling which will hold without ever giving trouble, while some of the other bolt arrangements fail to hold the cones to the shaft with sufficient force to prevent slipping. Hence the specifying of the coupling which will hold, or its equivalent, which enables the millwright to obtain bids from other makers of couplings.

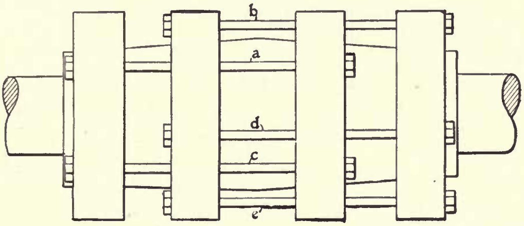

FIG. 82.—A COMPRESSION COUPLING WHICH HOLDS.

A view of this coupling is shown by Fig. 82, and another coupling, almost similar in appearance, is shown by Fig. 83. The alternate bolt arrangement shown by Fig. 82 always holds the coupling securely, no matter what strain may be placed upon the shaft. In fact, the shaft could probably be twisted completely in two before this coupling would slip. But with the arrangement of bolts shown by Fig. 83 the coupling frequently fails under loads which would be carried easily by the other arrangement of compression bolts. The only difference is that in Fig. 82 the rings or collars which clamp the heel and the toe of the split compression cone are connected together. In Fig. 83 the two rings on the heel are connected by the bolts, likewise the two collars on the toe are connected by the other or longer set of bolts. Thus there is no equalizing between the heel and toe pressures as there is when they are cross-connected as in Fig. 82.

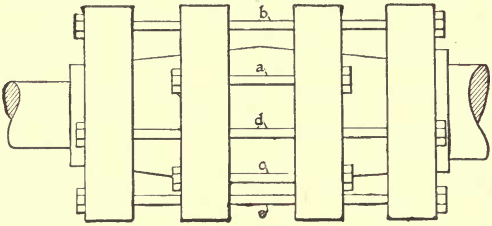

FIG. 83.—DEFECTIVE BOLT ARRANGEMENT IN A COMPRESSION COUPLING.

Flange or Plate Couplings.

A little further in the erector's list will be found items as follows:

(2b) (*Continued.*)
1 Flange coupling, 15⅞x4 7/16 inches, K.S. & K., fitted to shaft, but loose, to (2c)
(2c) 1 Shaft, 3 15/16 inches x 16 feet, 3 K.S. (200 r.p.m.)
1 Flange coupling, 15x3 15/16 inches, K.S. & K., and bolts, and driven on shaft. From (2b).

Here a flange coupling is specified which connects two shafts of different diameters. It is also specified that one of the couplings shall be fitted, but not driven fast upon the shaft. This matter is very important to the millwright, for unless the pulleys are all of the split variety they cannot be put upon the shafts where both couplings have been driven. In this illustration, one compression and one flange coupling is shown for the purpose of describing the two forms of shaft connection. In practice, the couplings would be all of one kind, either compression or flange, or some other kind.

Were the couplings of the compression type they would all be left loose, and nothing needs be done except to bore the internal cone to fit the sizes of shaft they are to be used upon. But with the flange coupling, it is necessary that after a coupling has been fitted the shaft should be put in the lathe and the coupling faced up, for that type of coupling will never run true until it has been faced up, as described.

A new flange coupling has recently been placed on the market from which great things seem possible. It is a combination of the compression coupling illustrated by Fig. 82, and the time-honored flange coupling, which is the best ever for holding shafts together, but which is despair itself when pulleys must be changed—and a coupling must come off!

Improved Flange Coupling.

This coupling as represented by Fig. 84, is a combination of the flange, compression and "horn" couplings—the latter being a three-piece cut-off coupling. The compression cone used in this coupling is, as shown in the engraving, cut in two in the middle of its length, instead of being made in one piece like the double cone used in Fig. 82. The flanges shown by Fig. 84 are made to interlock, thus taking the strain of the transmission, and leaving the bolts nothing to do except to carry their tensile load of holding the cones to their work. The cones butt against each other, and the shafts may be accurately alined in the coup-

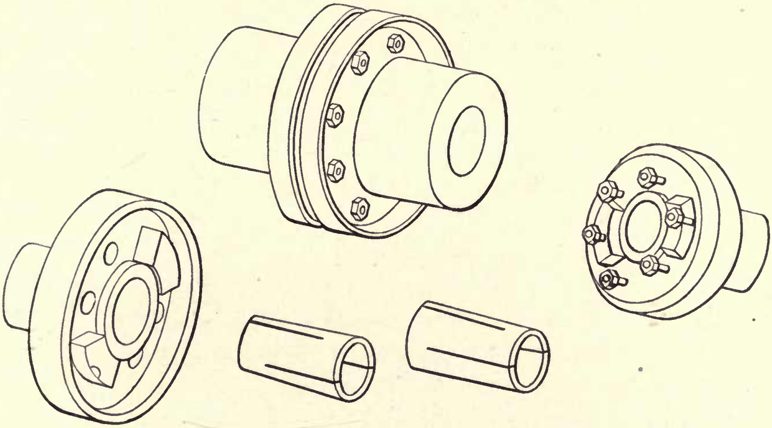

FIG. 84.—THE HENDERSHOT IMPROVED FLANGE COUPLING.

ling by letting one shaft project ½ inch into the other cone in much the same manner that the shafts are thus centered in ordinary flange couplings.

With these couplings nothing is necessary except to fit them to the diameter of the shafts and screw up the bolts. In taking down the couplings, the cones are loosened by inserting bolts in threaded holes made for that purpose, and then backing the cones right out of their hubs.

The Buyer's List.

After the erector's list has been made up as described, another list is made of the items in the list in question, bringing all the pulleys together, all the pillow-blocks into line, and all the belting, collars, bolts, washers, oilers, and everything else to be found in the list. A section of the list will be as follows:

1 Pulley, 34x10x3 15/16 inches, C. K.S. & K. (2a to 4).
1 Pulley, 26x8x3 15/16 inches, C. K.S. &. K. (2a to 5).
1 Pulley, 36x12x4 7/16 inches, F. K.S. & S.S. & 18-inch K. (2b to 2).

In like manner, everything in the erector's list is compiled. The writer has frequently had the erector's list typewritten double space, then with a sharp knife a cut was made between each pair of items and the resulting slips were compiled and pasted on another sheet of paper, from which made-up copy the necessary number of buyer's lists were typewritten. From a list thus made it is possible for the pulley man to get out the bill of pulleys complete with no other data—not even the shaft drawing being necessary.

The buyer's list should be used by the millwright when the shipment of machinery is checked against the bill of lading. And as each pulley or shaft or gear is checked, let a number be painted in white paint on that piece of machinery, and the erector knows where it goes and what shaft it goes on the moment he lays his eyes upon it. Once tried, this method will never be abandoned until a better one has been devised. It fills the bill pretty well thus far.

A word of caution as to belts. When specifying them, do not give the length of each belt separately. If there are four 8-inch belts of 48, 34, 54 and 27 feet, just lump them all into one item in the buyer's list and specify: 163 feet of belt, 8-inch, 6-ply I. S. Cotton, and add the requirements as to "pick" weight of yarn, tightness of weave, filling, etc.

RECEIVING MACHINERY AT THE MILL.

Upon receipt of a carload of machinery at the mill, the millwright should detail a trusty assistant to check the shipment, using the bill of lading and the buyer's list, and carefully comparing each piece of machinery with the specifications as regards quality and agreement with the list. Have all shortages and breakages reported at once to the railway company, accompanied by the bills of lading and the freight bills. Never dispute with the local agent. Pay the freight, receipting for the same as "in bad order," or "short so-and-so," as the case may be and take up the matter with the claim department of the road. Nothing is gained by trying to do this kind of business through the local agent. Go to headquarters at once.

As each piece is received and checked have it marked as described with the shaft number, and then set some laborers at work cleaning the shipping slush off the shafting and other bright work. Never try to erect a line of shafting until the white lead or other "dope," has been carefully cleaned off and replaced with a little clean oil; the key-seats all examined and touched up with a file wherever a corner has been jammed. Look carefully over all the pulleys. The keys should either be shipped in place in the hubs and wedged there with bits of wood, or they should be shipped in a box, packed in grease. The latter way is to be preferred, for many a key has been lost by being shipped tightly wedged into place by a bit of board driven in sidewise between the key and the opposite side of the hub. The wood shrinks en route, the key becomes loose and works out—and a kick is registered of key shortage, all on account of poor packing.

Have a man try every key into its pulley and into the proper key-seat in the shafting. Sometimes trouble is found in this way, and such trouble can be remedied much easier than after the shaft is hanging in mid air, and all hands are waiting for the trouble man to get out of the way. Let all the bolts be looked over and the threads touched up where they happen to be jammed. Nothing is more aggravating than a bolt which will not catch the thread in the nut, especially when a man is hanging head down trying to start the nut into place.

Lining Out for a Shaft.

The bridge-trees having been put in place according to the drawing, a line must be stretched either above or below the timbers, or above the piers, parallel with the line to which the work is to be done. If the mill has been equipped with permanent stations, as described in chapter III, it is only necessary to "pick-up" these stations with the transit and then transfer a line from them to the bridge-trees.

The station-rod, as described in chapter III, is the tool for use with the transit when lining the bridge-trees. If a couple of station stones have been placed directly under the center of the proposed shaft, then set up the transit over one stone, pick up with the cross-hairs the center mark on the other station stone, and the instrument is ready for business.

Let a man place his pencil on the edge of one of the bridge-trees, and sight to the bridge-tree with the telescope, directing the pencil to be moved one way or another until it is cut by the cross-hairs of the transit. Direct the workman to mark the place thus located which is a point in the shaft line. Proceed in like manner to mark each bridge-tree and then the pillow-blocks may be located and cut-in directly to the center marks thus made. In case the carpenters (that's what they call millwrights on the job) prefer to stretch a line instead of working directly to transit-given marks on each bridge-tree, then mark the first and last timber or pier, and let a line be stretched fair with the two marks thus made.

When station stones have not been provided for each shaft, and it is necessary to work from a line some distance at one side, then set up the transit on the line in question, locate one end of the shaft line about where it should come, then set the station-rod, Fig. 4 (page 21), with the scratch point *g* upon the shaft center mark on the first bridge-tree. Bring the sliding head of the rod to bear on the cross-hairs, then clamp the rod and carry it to the other end of the shaft line. Here place the rod horizontally as before and at right angles to the line of sight (this must also be done at the first station), and move the rod until the head intercepts the line of sight. While the rod is in this position, make a mark on the bridge-tree with the scratch point in the rod, and this mark will be in the desired shaft line.

The points thus found may be carried up or down by means of a plumb-line or a spirit-level. About as good a way to get the marks to the desired vertical hight is to nail a bit of board in a vertical position upon the marks on the bridge-trees. Then a line may be stretched at the desired hight. The line thus stretched may be used as a center from which to lay out on either side the distance the bridge-tree is to be boxed down to receive the pillow-blocks.

Leveling for the Shaft.

The next step is to level from one bridge-tree to another until each one is marked for the depth of cut required. This may be done with the straight-edge and carpenters' level, or with the telescope level. A sight may be taken across, either over or under, the bridge-trees and measurements taken from the line of sight to the cutting level on each bridge-tree. This method is preferable when a telescope instrument is available. In that case, set up the instrument anywhere so that a view is obtained of a point vertical to each bridge-tree.

If the instrument be located a few feet either above or below the shaft level, then remove the sliding heads from the station-rod and the leveling-rods, insert a short piece of wood in place of the regular rod, and place both heads upon this short piece of wood. Set the scratch point on one of the bridge-trees, just hooking the point over the timber, and take a sight at the sliding head which is moved to the line of sight. Next, carry the rod, clamped as above, to each bridge-tree in turn until the lowest one has been found.

Set the scratch point on the lowest bridge-tree at the level of the cut which should be made for the pillow-block on that timber. This point may be permanently marked for the bottom of the cut. Then carry the rod to each other bridge-tree in turn and make a mark on each for the bottom of the cut, as described. It should be kept in mind during all operations of this character that the leveling-instrument, the transit, builder's level, or whatever instrument may be used, should be kept in an absolutely level position as far as possible. If the instrument is not level, then the shaft will be as far out of level as was the instrument.

"Cutting-In" Pillow-Blocks.

Fig. 85 shows a very good method of cutting-in a pillow-block. The line *a* and hight-mark *b* having been given as described, proceed to find the line *g* for the bottom of the pillow-block cut. The mark *g* may be made by gaging from the upper edge of the stick, but it is better to use a spirit-level for this purpose, as shown at *d*. The end-marks *e* and *f* are made by measuring out either way from line *a*. Do not try to get these lines by using a square on the timber, for nothing about the bridge-tree can be accepted to work from except the line *a* and the hight-mark *b*. As far as other things go, treat the timber as though it was not standing square with the building, the line *a*, or anything else. In fact, work only from the two points mentioned and the work will come out right. Work from timber edges and there will surely be trouble.

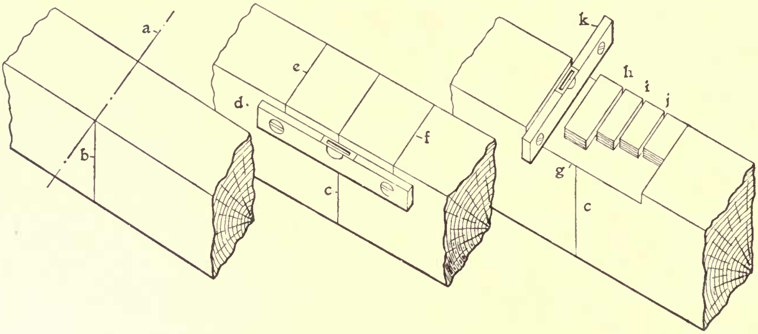

FIG. 85.—"CUTTING-IN" A PILLOW-BLOCK.

Having obtained lines *e, f,* and *g,* proceed to saw the ends of the cut, then saw or chop down to the line every three or four inches along the length of the proposed cut, as at *h, i, j*. The ax or adze may be used instead of the saw if preferred. Then cut through one of the sections, taking care not to cut too deep on the back side of the timber. In fact it is best to cut very light on the back side and lay in the spirit-level as shown at *k*, and gradually work down from line *g* until the instrument shows a flat level cut entirely across the timber.

Next, knock out another section at *j* and proceed to cut through as before, cutting down to the level on the back and to mark *g* at the front. Thus having obtained a level surface on three sides of the proposed flat surface, the center may be quickly worked down, using the eye to keep the cut from going too deep. A rabbet-plane is the thing to run through the end-cuts with while cutting down level. Then the cuts will be right close to the end-marks, and to finish up, or down, the center, cut away the bulk of the wood with ax, adze or chisel, then finish with a short jointer or a good fore-plane. Use the corner of the plane as a straight-edge to determine when the cutting is deep enough at any place. By turning the plane diagonally across the cut and then tipping it sidewise a little, a mighty good straight-edge effect is obtained, and the millwright sees at once where cutting is or is not needed.

Never leave a hollow place under any pillow-block. If by any means a man cuts too deep in any portion of the timber, then just mark down at *g* for another cut, making the new mark at a depth which will just work out the defective cutting and still leave the new cut the thickness of a standard board, either ½, ¾ or ⅞ inches, in order that a piece of wood of the required thickness may be quickly found without its having to be dressed to the right thickness. Nail the board in place in the bottom of the cut and take care that the nails do not come where the bolt-holes are to be bored.

It is well, if possible, to distribute the pillow-blocks before the cutting is done as above described, and then make the lines *e* and *f* to correspond with the lengths of the pillow-blocks. Sometimes the castings do not run evenly, and sometimes when of the same length there will be more of this length on one side than on the other. Hence, in marking at *e* and *f*, work from center line *a*, but work to the lengths of pillow-block castings as well. Sometimes there is a slight difference in the reach of pillow-blocks. By "reach" is meant the distance from the center line of the bearing to the bottom surface of the pillow-block casting. Most of the high-grade pillow-blocks are made adjustable in hight through a limited movement. When this adjustment is present, the cuts may all be made level to mark *b*, but where there is no vertical adjustment to the pillow-block the depth of cut must be varied to make up for any thickness or thinness from the 5 7/16 or 6⅜-inch "reach," as laid down in the lists and on the shaft drawing.

Where there is lateral adjustment in the pillow-blocks, they may all be cut-in with each end equi-distant from the center line *a*, but where there is no lateral adjustment it is the practise of some millwrights to cut the block-seat *e f*, Fig. 85, a little longer than the pillow-block and to fit in a wedge at either end of the casting. By driving or slacking these wedges, a lateral adjustment is obtained. It is the usual practise of the writer to cut in the pillow-blocks with the centers of the bearings dead on the line, and never to allow for wedges until in re-alining the shaft after the factory has been run a little. Then, if necessary, the ends may be cut out to allow movement to the pillow-block and wedges put in as found necessary. Wedges work loose, therefore, do not put them in unless they are necessary.

Rub the pillow-block casting back and forth on the wood and note how much of a bearing it has. Sometimes a few minutes' work with a cold-chisel will remove a lump or two from the casting which will allow a much better bearing on the bridge-tree. If there is not much rust on the bottom of the casting, a little blue or red chalk rubbed on before the casting is rubbed on the wood will show plainly where iron or wood ought to be removed.

BORING BOLT HOLES.

It is very necessary that the bolt-holes should be bored fair with the holes in the castings, and nothing is more aggravating than being unable to square the pillow-block with the line because of a badly bored hole which will not let the casting twist into place by ⅛ inch or so. To properly bore holes, mark carefully after the pillow-block has been fitted in place, then move the block to one side and bore the holes carefully, taking pains to get them plumb in both directions.

It is quite easy for a good workman to bore a hole perpendicular to (square with) a timber, as shown by Fig. 86, but it is quite a task to make the bit stand true with the timber in two directions. An experienced mechanic can come pretty close to it, but it is better to use some simple mechanical aid which renders it very easy to bore all the holes square with the timber.

When a man stands beside a timber and bores a hole, it is very easy to hold the auger *a* pretty square wth the timber in a direction lengthwise of the stick, but just how the auger stands in the direction *b c* the workman has no means of knowing. The invariable tendency is to lean the tool toward the workman. Thus the man would hold the auger about on the dotted line *b*. If the workman should stand on the right hand of the timber he would invariably incline the top of the tool in the direction *c*.

Should the workman stand straddle of the timber, then the auger would be "square" enough crosswise of the timber, but it would tip toward the workman as shown at *d*. Should he step to one side of the timber he could square up the auger as shown by the dotted line. The experienced workman who wishes to bore a very true hole will thus step to one side a couple of times after the worm of the auger has fully entered the wood and the tool will stand alone. By thus taking a look at the tool two or three times at an angle of 90 degrees, the auger can be made to start right, and all the workman has to do is to keep the tool from swaying sidewise in either direction in order to bore the hole fairly accurate in both directions.

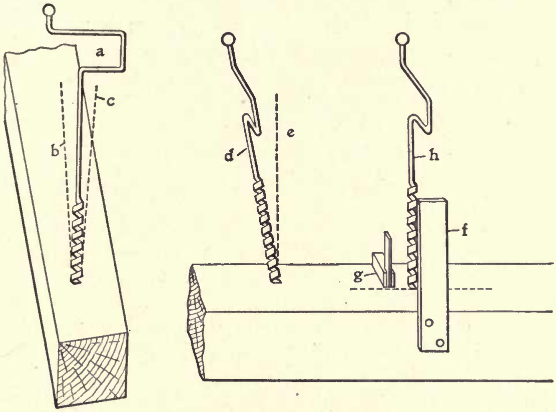

FIG. 86.—BORING "STRAIGHT" BOLT HOLES.

Sometimes it is necessary to bore through thick timbers from the opposite side from which the holes are laid out. In case of confined quarters above a bridge-tree, or when some machine stands close above the pillow-block, it becomes almost a necessity to bore up through the timber from the under side and the holes must hit those in the pillow-block fair and square.

A method whereby accurate ranging of holes may be done is shown at *f* where a piece of board with a straight edge is nailed to the timber and carefully ranged in the exact direction the hole must point. In cases of angle boring, where great accuracy is required, two pieces of board at right angles to each other may be nailed on and the auger is easily ranged in two directions.

Frequently a good mechanic will use a common try-square for plumbing an auger, the square being placed on the timber as shown at *g*. Sometimes the square is used alone, again it will be used in connection with the ranging target *f*, and sometimes the square alone is used lengthwise of the timber to plumb the auger to and from the workman, while he sets the auger in the other direction by his eye.

Bits and Augers.

Of all the known tools for making holes in wood, probably there are none better than the time-honored "ship augers," as shown by Fig. 86 at *a, d,* and *h.* These tools will cut faster, last longer and do better work than any other form of bit known to the trade. The "ship auger" is a single-thread tool, the chip-conveying screw being very heavy and the outside bearing upon the work being wide and strong. This form of bit usually comes with a plain shank upon which the blacksmith will weld the double handle shown by the engraving. The single-screw bit above described will not follow the grain readily, and if the worm be filed off the bit will bore absolutely straight in the direction it is started, irrespective of the grain of the timber, or of holes, knots, etc.

While the "Jennings" bit is the standard of today, there is a single-lip bit in the market which has a central shaft or spindle extending from shank to cutting edge, thus making the bit very stiff. The twist of this bit increases in pitch from cutting lip to shank, thereby sending the chips out "faster than they are cut" and preventing clogging to a great extent when the bit is buried over the twist in the toughest kind of wood. This bit is capable of doing a good deal of hard rough work, and it also cuts as smooth a hole, if not the smoothest of any bit in the market. It lacks in one thing, and that is the "nail-resisting" power, for, like the curved-lip bit, it goes all to pieces when run against a nail. It lacks the useful property of being readily filed into shape after being dulled that is possessed by the Jennings and the "ship-auger" bits. These bits are illustrated by Fig. 140, on page 368.

CHAPTER XII.

Putting Pulleys in Place.

A few years since, there was considerable said in regard to the manner in which curved-arm pulleys should be placed upon a shaft. The pulleys had their arms made curving because the laws of rim and arm proportion was not as well understood then as now, and with a thin rim which set quickly and left thick arms projecting from a thin hub, the hub and rim cooled first, then when the arms cooled down and contracted, and as there was nothing which could yield to the heavy strain, the arms were pulled apart or separated from the rim or from the hub. To remedy this, the arms were curved so that when they contracted in length the hub twisted around a little but the arms did not break off.

A lot of nonsense was in circulation about so placing the pulley that the belt pull would place the arm-metal in compression instead of in tension, just as if a few pounds of belt pull would ever find whether the metal was in compression or in tension. Pulleys are nearly all made with straight arms nowadays, the rims, arms and hubs are proportioned right, and nothing breaks. The only thing the millwright should look after when placing a pulley is the way the key must drive in order to sometime permit the pulley to be taken off the shaft again.

When plenty of hoisting tackle is at hand, the problem of getting heavy pulleys into place is comparatively simple, as it is only necessary to hang up the tackle and raise the pulley into place, slip the shaft through and drive the key. But when there is no tackle at hand, resource must be had to the timber pile. A modification of the "rocking-horse" method is shown by Fig. 87, where a runway is rigged for the pulley to be rolled up an inclined plane until it is at about the required hight.

Then the pulley is chocked by two pieces of timber and bits of board are nailed to the runway plank to prevent the pulley from getting away during subsequent operations. It has always been the practise of the writer, when the pulley arrived at the position shown by Fig. 87, to put a chain or a heavy rope around the rim of the pulley at its highest point and have that chain made fast to some convenient timber overhead. Then, should anything happen to the blocking, the pulley is going to stay where it was placed and not slide down upon people's heads.

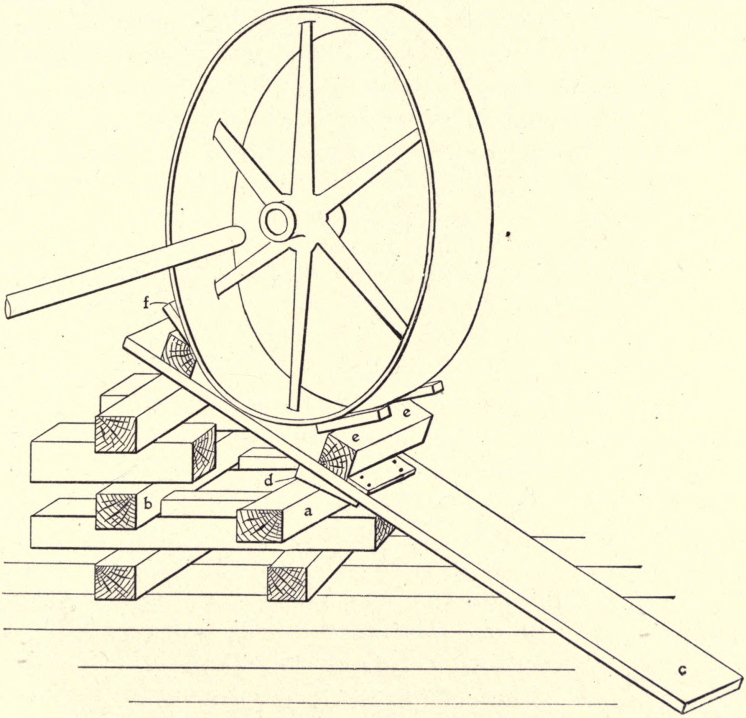

FIG. 87.—PUTTING ON A PULLEY WITHOUT HOISTING TACKLE.

Block the timber *a* to prevent its possible movement toward *b*, then raise the end of the runway at *c*, and insert wedges or other blocking at *d* to bring the pulley to the exact hight required. Some more wedges at *e e* and *f* allow a little forward and back movement to bring the pulley fair with the end of the shaft which is then twisted through the pulley and the blocking removed.

Lining Up Pulleys.

Some millwrights stretch a line across the sides of a pair of pulleys and then move one or both until the sides coincide with each other. This is hardly necessary, as a pair of pulleys can be "sighted" into line with as great, if not greater accuracy than they can be placed by means of a string. Simply "squint" past the side of one of the pulleys, as close to the shaft as convenient, and bring the edge of the rim of the sighted pulley fair with the one over which you are sighting. Then sight along the other sides of the pulleys and see if they come even also. If they do, all well and good. If not, then see if one pulley face is not wider than the other. In case such be the fact, divide the extra width so the centers of the pulleys will "track" with each other.

Fitting Keys.

When putting keys into pulleys see that they do not bind on top. They should be a good fit and move easily yet snugly in the slot in both shaft and pulley. All the fit or the holding pressure must be between the sides of the slots in pulley and in shaft. A set of double calipers is very convenient when fitting or making keys, though two ordinary sets may be used instead of the double tool, one form of which is shown by Fig. 88 and can be easily made, being simply three pieces of sheet iron, about 1/16 inch thick, cut out as shown and fastened together with two ¼-inch rivets. The length of the tool is about eight inches. Some mechanics prefer to let the central portion run upward a couple of inches to form a holding piece by which the tool is grasped between the thumb and fingers when in use.

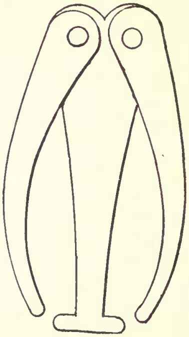

FIG. 88.—DOUBLE CALIPERS.

In use this tool is set to the thickness of the key or spline (the two terms have the same meaning and are used indiscriminately) at the ends of that article. In forging, the smith works to the two calipers for the heel and toe of the key, and uses the larger dimension for the width of the key as well as for its thickness. It is best, however, when keys have to be made in any quantity, to procure some steel cold-rolled to the width and thickness desired, then plane the toe to the required thickness and the key is done with no expediture of time at the forge or at the vise. The shaper, with a special clamp in the vise-chuck belonging to that tool, will make a key quickly.

In using such an arrangement, it is only necessary to slide the blank be it narrow or wide, thick or thin, into the inclined vise, which is set to key-taper of 3/16 inch to the foot, and plane away until the point or toe of the key is brought to the required thickness. It is very little work to make keys in this manner and it costs less than forging them from a bar of any size which comes to hand. In fitting the keys, after forging or planing, there is nothing to do but to drive the key into place and drive it out again, filing off the spots where the key rubs hard against the pulley hub. Some of the old-time millwrights "hot-fit" keys. The blank is forged as closely as possible, then it is driven into place as far as it will go, the driving being done as quickly as possible so as to shape the key before it cools.

After heating and driving a couple of times in this manner, the taper obtained is carried along the blank for the required length of key by forging and filing, then the key is driven cold and fitted by further filing as found necessary. The great objection to the hot fitting method is its unmechanical features, and the possibility of upsetting the hot key in a chambered hub. The writer had that experience once and it was enough for a lifetime. That crippled key would not come out and to the best of the writer's knowledge and belief it never did come out!

Making Keys on the Job.

When keys have to be made on the job, it is as good a way as any to make a soft wood pattern of the key and make the pattern fit by trying it into the key-seat when the pulley is in place. Fit the large end of the pattern first so the big end of the key will barely squeeze into the keyway with the pattern reversed one end for the other. Then do the same with the small end of the pattern, reversing that and applying it to the outer end of the keyway. Plane this end of the pattern until it will barely force into the keyway. Then it is an easy matter to plane a straight slant between the two fitted ends of the pattern, and but very little more fitting of the pattern will be required.

SET-SCREWS.

The conventional pulley fastenings are keys and set-screws if the clamp devices of some of the wooden and other split pulleys be excepted. But there is at present no way of holding a pulley in place under heavy loads which works as well as the well-fitted key. The set-screw answers very well where there is little power to be transmitted, but it will not do for real heavy work. The various clamp-hub devices put out by the makers of light wooden and metal split pulleys answer very well where set-screws will do the work.

These same pulley makers have found it necessary to provide forms of hubs which can be key-seated, thus acknowledging by their own products the unanswerable argument that nothing holds a pulley under heavy torsion strain except a well-fitted key. And here it comes right down to a question of shear, as discussed on page 186.

There must be provided such a quantity of metal in single shear that the torsional moment will not shear that amount of metal between the pulley hub and the shaft. This is where the set-screw fails after it has been drilled into the shaft. There is so great a torsional moment that the two surfaces mentioned act as wire cutters and shear the set-screw cleanly in two. Or if the screw be not let into the shaft enough to be cut off, the shearing strain drags the point of the screw around the shaft, this time shearing the metal of the shaft instead of that in the pin.

SHEAR IN SET-SCREWS.

The millwright can easily figure the amount of strain existing in key or set-screw between the shaft and hub, and he can also determine that the set-screw can be made large enough to safely carry all the strains at the point mentioned. But when he ascertains that the size of set-screw required will nearly cut the shaft in two when drilled into it, then it is seen that some other way of obtaining the necessary shear-section must be used because it cannot find room in the shape of a screw.

Fig. 89 shows the comparative holding power of set-screws and keys, and in that engraving, assuming it to show a piece of 2-inch shaft (1 15/16 inches) the key will be made ½ inch wide and it is cut into the shaft ⅛ inch. Supposing that the torsional strain be great enough to shear the shaft along the broken line *a,* which, in a hub 4 inches long on a 2-inch shaft, would give a section for the shear of about ¼×4 inches=1 square inch of metal. But it is impossible for the metal to shear at the line *a.* Even should the piece be loose above the break line the shaft could not turn around in the hub because of the wedge-like action of the key which rides up on the flat surface of the key-seat, and the entire section of shaft along the line *b* must shear off before the hub can revolve on the shaft.

Thus it is the key which must be sheared off to allow the shaft to revolve, since it has been shown that the shaft cannot be sheared so the key will not hold. The key has a section along the line of shear of ½×4 inches=2 square inches of steel, corresponding to a set-screw 1 3/5 inches in diameter, the size of screw shown at *d.* Thus it is no wonder that set-screws fail to drive heavy loads. It is not the fault of the set-screw, for that is doing all it can. The millwright should figure this matter a little when he is tempted to trust to a set-screw to drive some pulley—just figure the torsional moment and ascertain just what the fastening has to do, then decide whether "boy set-screw" is able to do the work, or whether a "man's-size" key is not necessary in that particular instance. Too much guess work in set-screws and pins often leads to trouble.

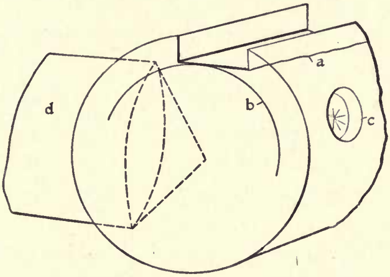

FIG. 89.—HOLDING POWER OF SET-SCREWS AND KEYS.

The only place where set-screws amount to much is when they are placed on top of straight keys and serve merely to hold the pulley from slipping sidewise along the shaft. The combination of straight key and one or two set-screws is a very good one and has been adopted by some large manufacturers of power transmission machinery who send out all their work with straight keys and set-screws in each pulley.

One trouble met with in the above noted method of fastening pulleys is the tendency of the keys to work out endwise whenever the set-screws become a little loose. This action is prevented by the Woodruff system presented by Fig. 90. In this method or system the pulley is fitted with a straight seat, no taper being permitted, and the set-screw is placed anywhere except on the key. It may be at right angles to the key, or anywhere else, as long as the set-screw is not put in the key-seat itself.

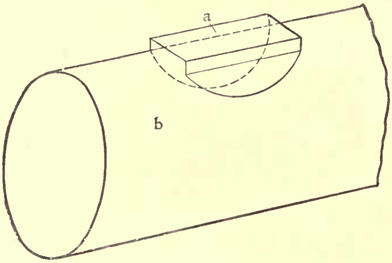

FIG. 90.—THE WOODRUFF SYSTEM OF KEYING.

The key, as shown at *a,* Fig. 90, is a half round piece of flat steel which just fills the cut *b,* made in the shaft by means of a milling cutter. When the key has been placed in the circular cut made for it, the pulley is slipped endwise over the key, then the set-screw is tightened and the key can never get out as long as it is covered by the pulley hub. The only objection to this method of keying seems to be that the shaft is weakened to a considerable extent by the deep hole cut in the shaft. Much more metal is removed from the shaft cross section by this method than by the usual method of cutting a key-seat, therefore the shaft is weakened in exact proportion to the removal of metal from the cross section of the shaft.

KEYWAYS AND STRAIGHT SHAFTING.

Steel shafting as now manufactured is prepared for use in two ways known as "cold-rolled" and "cold-drawn." The names indicate the method used in bringing the shafts to size, and some people prefer one kind and some another. The usual complaint, however, seems to be that the cold-drawn shafting does not readily withstand key-seating, the cutting away of the skin on one side of a shaft causing the piece thus cut to spring and bend in a most unbecoming manner to the despair of the man who is trying to make a straight shaft of that material. Thus for wooden pulleys and compression couplings, where the work is all of a light character, the cold-drawn shafting gives satisfaction. But when this shaft is cut full of heavy key-seats, then another story is sometimes told.

STRAIGHTENING SHAFTING.

Almost all shafting must be straightened after being key-seated and fitted with couplings of the flange variety, and often some straightening must be done on the job. In the absence of a screw-press, though a jack-screw may sometimes be impressed to do service in that direction, a very good job can be done by a combination of weight-loading and peening methods.

A shaft needing to be "sprung" a little at *a* is represented by the engraving, Fig. 91, in position to be straightened. The bend is placed on the steel rail, or other hard bearing, with the hollow side of the shaft uppermost, although it is shown in seemingly the opposite direction in Fig. 91, for the reason that the shaft has been loaded with the pulley, the old rail *c*, and as much other junk as may be necessary to spring the ends of the shaft at least three inches below the line through the ends of the shaft and bearing *a*.

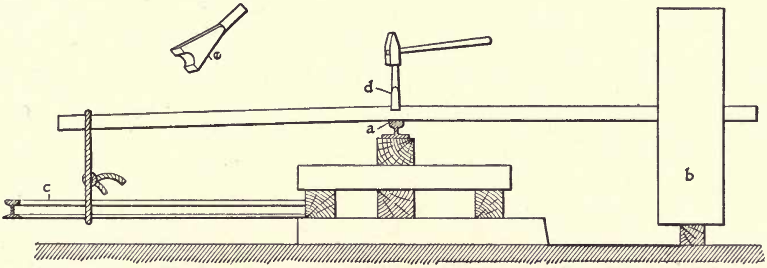

FIG. 91.—STRAIGHTENING A SHAFT.

Having gotten a strain on the shaft in the direction tending to straighten it, but with much less pressure than is necessary to make the shaft take a permanent bend, do a little hammering at *d,* using a tool made somewhat as shown at *e,* the only requirement being that the end of the tool which bears against the shaft is hollowed out to the same or nearly the same circle as the shaft. This is to prevent the shaft from being flatted or otherwise distorted by the hammer blows which are laid upon the tool with a heavy sledge, as shown by the engraving.

Theory of Shaft Straightening.

The shaft can be straightened all right by hammering directly upon its surface, but it is apt to put the shaft out of shape at that point a little, which may be avoided by using the tool shown at *e.* The theory of the operation is that with a strain in the shaft at *a* the hammering at *d* stretches the metal a little, thus elongating that side of the shaft and straightening it a little. In order to determine how much of this treatment is necessary the shaft must be unloaded and revolved, either between centers, or otherwise supported at the ends.

The loading and peening operation should be repeated until the shaft has become as straight as desired. Great accuracy in straightening may be obtained in this way by repeated and careful peenings. It may be done in a lathe by placing the hollow part of the shaft uppermost, as described; then take a pry over some portion of the carriage with a lever, and when a strain is on the shaft have another man do a little peening directly above the end of the lever.

Shaft straightening can be done in this way close up to the shoulder of a machine. A cutter-head of a planer may thus be straightened, and cutter-head shafts always bend in the corner, close to the casting to which the knives are bolted—a very hard place in which to straighten a shaft in almost any other manner. Be careful when trying the above described method and do not bend the shaft too much. The shaft bends much easier than would be expected, and the inexperienced workman frequently bends the steel too much the first time; therefore go slow "until you get the trade learned."

Setting Up Journal Bearings.

Before proceeding to put the belts on the pulleys of our newly hung shafting, a few words are in order in regard to the setting up of the journal-bearings. If a rigid pillow-block is used, there is nothing to be done except to pack under the cap with liners until the cap-bolts can be screwed down tight. Never let a bearing go when the cup cannot be forced down to a solid bearing without binding the shaft. Sometimes the liners are just a trifle too thin, and the temptation is great to pass them with the cap-bolts set back just a little. But this does not pay. If cap-bolts are to be kept tight the liners must be thick enough so the nuts or bolts can be screwed down tight.

Hardwood makes very good liners, so does iron or soft steel. Pine is not good for this purpose unless it has a very wide bearing surface, large enough to stand the pressure from the bolts without flattening out. When a liner squashes down in a bearing it is time that harder material be used in place of the soft stuff. Some concerns send out bearings in which the liners are all in place and of just the right thickness, and the liners themselves are made of many thicknesses of very thin wood. When it is necessary to tighten the cap a little, it is only necessary to peel off one of the thin layers of wood from each liner—and the job is done.

Capillary Oiled Bearings.

Many manufacturers of pillow-blocks do not send out fitted liners or any liners at all for that matter. They evidently go by the maxim, "out of sight, out of mind," and let the millwright work out his own salvation—and liners.

In setting up bearings fitted with capillary oiling attachments—plain "wick" bearings, to cut out the high-flown scientific talk—be very careful to keep the wick in place while putting the shaft down against the lining of the bearing. A bunch of wicking between the shaft and the box-lining does not conduce to a level or easy running shaft after the cap is screwed down against the shaft, clamping it as in a vise against the bunch of hair-cloth which forms the "capillary."

Ring-Oiling Bearings.

The same thing must be observed when putting a shaft into ring-oiling bearings. The ring or chain in such bearings is very frail and is easily bent, and once bent the oiling of that bearing is badly damaged if not entirely knocked out, and a hot box will be the sure result. Another thing needs close attention: Examine the oil cavity closely and see how much core sand there is adhering to the surfaces of the metal or loose in the bottom of the oil space. Sand and oil is a pretty good mixture to keep a shaft bright, but it is not good for lubricating bearings, and it is the unknown cause of many a hot box which the best oil in the world will not keep cool.

Make sure there is no foreign matter in any of the oil pockets. A bit of wood may cause serious trouble by floating on top of the oil when the cavity is filled, getting caught in the ring or chain and putting the whole bearing out of business. A three-inch stub of a lead pencil put one whole bearing out of commission, melted out the babbitt lining and caused nearly a whole day's shut down of the entire factory.

When the bearings were set up and made ready for use, the dude bookkeeper came along and tried to see how one of the bearings was rigged. He puggled around in the oil cavity with his little lead pencil until it slipped out of his fingers and went down into the oil cavity. Then, instead of telling what he had done, Mr. Bookkeeper quietly slid out for his usual daily lunch—a glass of water and a toothpick—and let the pencil go. The consequence was a very hot box, so hot that the babbitt melted.

The usual oiling arrangements fitted to most bearings are very defective as far as getting the oil to the bearing or to the oil cavity is concerned. The big grease pocket on top of a box is a fine thing to catch dust and sand and to conduct those undesirable materials directly to the bearing surface. With the rigid flat box, so much used on elevating and conveying machinery, there is absolutely nothing to hold the oil while it is working down through the very small oil channel, and most of the oil is lost by being spilled on the outside of the box.

Spring-Cover Grease and Oil-Cups.

There are on the market several forms of nice little spring-cover oil-cups which only require that the spout of the oil-can be pressed against them to cause the cover to be moved back so that oil can enter. When the oil-can spout is removed, the cup cover springs back into place and everything is closed tight again. Some of these spring cups fit a pipe thread, and others are made to be driven into a plain hole, being held there by friction. They are very desirable for light machines and should be used wherever frequent oiling is necessary. There is no time lost by unscrewing oil-cup covers when these cups are used, and no covers are lost or left off either.

OIL-CAP AND NIPPLE OILERS.

For lines of shafting, elevating and conveying machinery, and in fact for all rough bearings which are exposed to dust, and especially where the owners refuse to go to much expense for oiling devices, the writer has obtained first-rate results from the simple yet effective "oil-cap and nipple" devices, the use of which was specified on page 198. These little appliances, as shown by Fig. 92, are very simple and consist of two short pipes or nipples, from 1/8 to 1/2 inch in diameter, according to the size of pipe tap which can be run into the oil-hole provided in the cap. Sometimes a 1/8-inch pipe will fill the hole. At other times a 3/8-inch pipe will be found necessary. It may suit the millwright best to put in a reducer when a large tap must be used in the cap, then a uniform size of pipe, say 1/4 inch, may be used throughout the job for oiling devices.

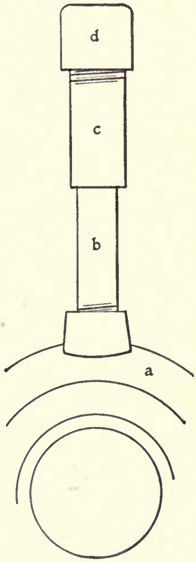

FIG. 92.—"OIL-CAP" AND NIPPLE.

Should the pipe *b* chance to be 1/8 inch in diameter, the cover-pipe *a* will be 1/4 inch in diameter. When the hole in *a* is large, then pipe *b* will have to be larger, say 1/4 or 3/8 inch, and the cover nipple *c* and the cap *d* must each be one size larger in order that they slide easily over *b*. To oil bearing *a*, it is necessary to remove *c* and *d*, which are screwed together. They are replaced after the oil has been put in pipe *b*.

When rigid flat boxes are used, it is the custom of the writer to pack a little waste very loosely in pipe *b* close to the lower end of that pipe; then when the oil is poured in at the upper end the lubricant is caught and held by the waste, through which it finds its way very slowly—so slowly, in fact, that it forms a sort of continuous oiling business which is a great improvement over the usual method of open oil holes, or perhaps fitted with pine plug closures.

GREASE-CUPS.

All slow moving shaft bearings should be fitted with compression grease-cups and a man should be trained in the use of such cups. The great fault with the untrained man is that he forces too much grease through the cups. When grease begins to form ridges just outside the boxes on and around the shaft, then it is certain that too much grease is being forced, and the quantity should be cut down at once. But a very small fraction of a turn at the grease-cup cap is required to lubricate the bearing of a 1 15/16-inch shaft for a day's run.

BALL- AND ROLLER-BEARINGS.

The great decrease in friction of shaft and other journals by fitting them with ball- or roller-bearings is not only due to the replacing of sliding by rolling friction, as many people suppose, for well lubricated journal-bearings have a coefficient of friction of 0.09 to 0.15, while roller-bearings show coefficients ranging from 0.01 to 0.03. There is another great cause of friction decrease on account of the roller-bearing, and that is: the latter form of bearing is independent to a large extent of lubrication, and the fact of becoming dry does not increase the coefficient of friction as it does with plain journal-bearings where sliding friction must be accounted for.

Ball-bearings are equally efficient with roller-bearings, as friction reducers, but the great trouble with the ball-bearing is that there is not sufficient surface to carry the load, therefore the balls wear out much quicker than the rolls. Unfortunately, increasing the diameter of a ball-bearing does not increase its bearing surface as fast as it increases the inconvenience of using the larger sizes, hence the remedy must be looked for in some other direction.

If a ball-bearing has its length (if such a term can be permitted) increased to increase the bearing surface, then the ball thus treated becomes a roll, and the transformation into the roller-bearings is complete. Thus a roller-bearing is in fact a ball-bearing with elongated balls.

THE SHORT LIFE OF BALLS IN BEARINGS.

When bearings are mounted upon balls, the slight surface presented, even in the aggregate, by a considerable number of balls is very slight indeed, and a large amount of wear takes place quickly, hence the exceedingly short life of the ball-bearing when used in heavy journals. An excellent example of this matter is in a ball-thrust bearing, placed against the end of a shaft in a Jordan beating-engine in a paper mill. Before the thrust bearing was put in position, the thrust was carried by rings on the shaft, and the steam engine indicated 90 horse-power.

After the thrust-bearing was in position, the thrust rings being left as they were and the new bearing arranged to take the strain, the engine indicator card figured 60 horse-power, showing a saving of 30 h.p., or 33 1/3 per cent. But the balls did not last long. They were disposed in concentric rows around the center of the shaft, and placed in a cage so that their relative position must always be maintained. After a few weeks' run it was found that the balls nearest the center of the shaft remained nearly the original diameter (½ inch) but the balls in the outer rows were reduced greatly, the diameter of the balls in the outer circle being not over ¼ inch, and increasing step by step as the rows neared the center.

While this bearing was a success in saving power, it was a failure after all, because it could not be made to stand up under the severe pressures put upon the balls. Had the design of the bearing been changed so as to permit the balls to be placed against the original thrust rings, there is no doubt but the device would have been a success.

ROLLER-BEARINGS.

High grade roller-bearings are regularly on the market, and are made by several concerns manufacturing them exclusively. With the construction of these the millwright has little to do, but upon their application everything depends, as far as the saving of power and the life of the bearing is concerned. When a bearing is attached to a shaft, unless great care is taken that the race or shell for the rolls is in exact line with the shaft, there will be unequal wear which will more than counteract the saving in power by reduced friction.

The surface of the shaft against which the rollers bear must be very smooth and true. It must be as perfectly cylindrical as is possible to make it, and the presence of lumps, holes, etc., can only go to add to the coefficient of friction. If it were possible to make the surfaces of the rolls and of their housings perfectly smooth and inelastic, then there would be no friction whatever, and were it not for the resistance of the air, a shaft thus mounted on the perfect bearing surfaces would continue to revolve forever.

But as we can never make perfect surfaces, and cannot remove the air resistance, we must continue to roll rough surfaces over each other and to pull surfaces against the air resistance, and confine our exertions to obtaining the best possible conditions. Therefore make the roller race as smooth and as perfect as possible, and make the rolls themselves perfectly round and smooth, and make them so hard that they will not change shape under pressure, yet they must be very elastic lengthwise in order that they may conform to such inequalities as may get into the roller race in spite of our best efforts to the contrary.

Care of Roller-Bearings.

Once roller-bearings have been installed, good care should be taken of them. It is a mistake to suppose that a roller-bearing, once in place, will run forever without attention. The roller-bearing must be taken care of. It must be kept clean. As for lubrication, some people claim that lubrication is not necessary for roller-bearings, but bear in mind that no piece of machinery ever built, which would run at all, would not run better when well lubricated, and roller-bearings are no exception.

If a roller-bearing is to be neglected and never looked after, once it is installed, then it might be better to omit lubrication on the grounds that the dry bearing would be less liable to clog with dirt. But as there will be more friction at the ends of the rolls without oil, it certainly will pay to lubricate the bearing and then take care of it. When rolls once slide, be it ever so little, they are gone, and can never be made to run properly again without regrinding. And dirt and dry surfaces go far toward making rolls slip instead of revolve.

PIN BEARINGS.

There is a form of roller-bearing in use a great deal in cars which are to be used on the floor of a factory, being pushed by hand on floor or on track, as needed. When such cars are intended to carry heavy loads, they are fitted with bearings similar to the roller type, but much more simple. These are known as "pin" bearings and are made of plain short pieces of cold-rolled steel rod, cut to length, and interposed between the journal and the housing of the bearing.

When making rolls of this kind, it is only necessary to select straight and round pieces of rod, saw them off square, and remove the corners to prevent the pins from catching against the end of the race and "slewing" around more or less diagonal with the bearing. When designing a pin bearing, it is evident that there must be a certain relation between the number of the pins, the diameter of the pins and the diameter of the journal.

Should the millwright have occasion to design a pin bearing (or a roller-bearing, for that matter), and wish to ascertain the number of pins for a given diameter of shaft, or the size and number of pins to fill a given housing upon a shaft of known diameter, then he can solve the problem with the aid of the simple formula given below:

The diameter of the circle through the center of the balls =diameter of a ball divided by the sine of the angle occupied by one-half of one ball. Putting this very awkward expression into algebra, and letting

N=number of balls,
D=diameter of circle through center of balls,
d=diameter of balls,
R=diameter of shaft,

then, $$D=\frac{d}{\text{Sine}\dfrac{180^\circ}{N}}$$

To get a better understanding of this equation, assume that a bearing one inch in diameter is to have six balls fitted around it. How large balls will be needed?

We have 180—half the degrees in the entire circle—divided by 6, the number of balls, gives 30 degrees filled by one of the balls in a half circle, this of course being equivalent to 12 balls in a whole circle, or "one-half the angle filled by one ball." By looking in a table of sines in Trautwine, or some other reference book, it will be found that the sine of 30 degrees is exactly 0.5, or one-half. The diameter of the ball being 1 inch, and the diameter of the ball circle being $d \div 0.5$, or $\frac{1}{2}$, it is evident that the ball circle is just twice the diameter of the ball; therefore the balls must be as large as the bearing in order to fill the conditions given as shown by Fig. 93.

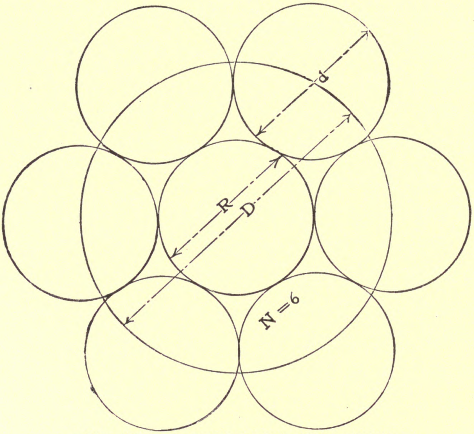

FIG. 93.—A SIX-BALL BEARING.

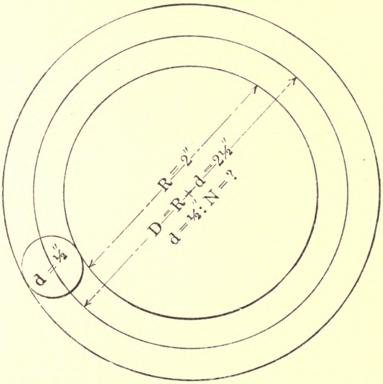

FIG. 94.—FINDING THE NUMBER OF BALLS NECESSARY.

Should we have a 2-inch bearing and a 3-inch housing and desire to ascertain the number of pins required to fill, we may use the equation as follows, the layout being as shown by Fig. 94.

As the housing is 1 inch larger than the shaft, the balls must be ½ inch in diameter (not allowing anything for clearance) and the ball circle will be 2½ inches. Hunting up all the numerical quantities that can be found, we obtain:

$N=?$
$D=2\frac{1}{2}$ inches,
$d=\frac{1}{2}$ inch.
$R=2$ inches.

Taking the formula $D=\dfrac{d}{\text{Sine}\,\dfrac{180^\circ}{N}}$ and substituting the known numbers, we find that $2.5=\dfrac{.5}{\text{Sine}\,\dfrac{180^\circ}{N}}$. This reduces to: Sine of $\dfrac{180}{N}=0.2$. Looking up 0.2 in a table of natural sines, it is found that $0.2=11\frac{1}{2}$ degrees, nearly. Then $180\div 11.5=15.65$ nearly, therefore 15 pins will go in, and if they are a little smaller than ½-inch in order to give the necessary clearance, 16 pins may go into the housing. In this manner, the millwright can find any of the quantities pertaining to ball or roller bearings, provided a sufficient number of the points are given.

SET COLLARS.

Every shaft should be fitted with two set collars, and these should preferably be placed at opposite ends of the same bearing. It is the practise of some men to place one set collar at either end of a shaft, but the two collars against the same pillow-block is preferable as it leaves but one bearing to look to in case the shaft should develop too much end motion. In very long shafts, the variation in temperature has to be taken into account when end collars are used, but with both against the same bearing, and near the middle of the shaft, no attention need be given to temperature variations.

Safety set collars should be used in every case, and no collar with a set-screw projecting beyond the face of the collar should ever be tolerated. Collars are now generally made with a thin flange at either end, the flanges being large enough to project farther than the head of the set-screw, thereby preventing flesh or clothing from coming in contact with the wicked screw-head.

Sometimes it is possible to dispense with one set collar, as one or more of the pulleys may come next to a journal-bearing and thus take the place of a collar at that point. When setting up counter shafts, see that there is a collar on the side of the loose pulley opposite the tight pulley. It is all right to place the tight pulley of a pair next to a bearing, but this should never be done with a loose pulley, unless there is a set collar between loose pulley and the journal-box in order to prevent pinching the pulley between the tight pulley and the bearing.

When pulleys are thus confined, the chafing of the hub against the hub of the tight pulley causes undue friction at that point, which frequently causes a good deal of heating, burning out the oil, and helping to wear out the loose pulley lining or bushing much sooner than if a good collar had been placed as described.

End Motion to Shaft.

Never collar a shaft in such a manner that it cannot have a certain amount of end motion. Any shaft or machine will run better in its bearings if a certain amount of end motion can be permitted. In some machines, end motion, of course, cannot be permitted and the bearings wear out all the sooner for it. This is true in circular saws and similar machines. With a liberal allowance of end motion, the particles of metal in box or bearing do not always pass each other, and if there is a tendency to wear ridges in bearing or shaft, end motion is the surest preventative.

Electric generators and motors should always be given 1/16 to 3/16 inches end motion and they do not run as well when tightly collared. Other machinery, shafting included, should be given a similar amount of end motion where the character of the device will permit. In some kinds of machines, an oscillating movement is given to the shaft in the bearings, particularly in the case of scrapers which act upon rolls or pulleys.

The Final Alinement and Level Test.

The shafting is now ready to receive the belts. The pulleys are all in place, firmly keyed, the couplings set and properly bolted, and all the journal-bearings have been made up, the caps tightened solidly upon bottom castings or liners, and, where necessary, the bearings have had their soft metal linings scraped so that the shaft is not pinched at any point. In fact, the 42 feet of shafting and its ton or so of pulleys revolve so easily that a man can turn the shaft with one hand applied to the 60 inches engine pulley. If a shaft, after full adjustment, will not turn as easily as above described, something is wrong, and the bearings should be investigated again before the belts are put on.

And here a word of caution. If it is desired that all the belts shall run true upon their pulleys, without running off an inch or so on one side or the other, then take great care to put the shafts exactly level and as parallel with each other as it is possible to make them. This means that two shafts, each 10 feet long, are not more than 1/16 inch farther apart at one end than at the other, and that upon sighting over both shafts the eye can detect not the slightest variation in their being parallel.

Sighting over shafts is not a good way to make them parallel, but it is a first-class check on what has been done with transit and station-rod, and the sighting should never be omitted. Sighting along the sides of pulleys is another first-class check upon the work done on the shafting, and by thus sighting, the millwright can check the work of his men in a most complete and very expeditious manner. But in thus sighting the pulleys, caution must be observed that dependence be not placed upon one sight alone. Two sights should be taken over every pulley, one sight for each, as indicated in Fig. 95, where *a* and *b* represent two pulleys which are to be belt connected and which are expected to run so true with each other that the belt will show alike on each.

DOUBLE PULLEY-SIGHTING.

With the eye placed at *c,* Fig. 95, the pulleys *a* and *b* appear to be in line with each other, and at *e* the edge of the pulley *b* coincides perfectly with the entire side of pulley *a.* But if the eye be directed toward the top portion of the pulley, say at *f,* it will be seen that some of the pulley comes in view. At the far side of the pulley *g,* there will be more of the pulley in sight, showing that while pulley *a* is in line with *e,* that pulley *b* is not in line with pulley *a*, as may be proved by moving the eyes to position *d*, which is in line with the opposite face of pulley *b*.

When the conditions are met with as in Fig. 95, it is time to do a little investigating and see which shaft is out of line—or which pulley is not true upon its shaft. First, have an assistant revolve pulley (and shaft) *a* slowly while you continue to sight from *c*. If no variation in the line of sight is observed at *e*, while pulley *a* revolves, it may be considered that pulley *a* is all right. Next, have pulley *b* revolved slowly, while still looking from *a*. If no variation is observed at *e*, it may be assumed that pulley *b* is also truly fixed upon its shaft.

But should there be observed any variation of side of pulley *e* as that pulley revolves, then try line of sight *d*, and have pulley *b* stopped when the greatest variation is either to the right or to the left, and look at the pulley to see whether it is bored too large for the shaft or if the machinist has omitted facing the sides of the pulley. Occasionally it will be found that the pulley is not bored true with its rim, having in some way moved in the boring mill. In such cases, two courses are open: Either throw away the pulley and put in a perfect one, or place the points of variation vertical, and then sight across *g*, *e*, and move the shaft of pulley *b* until the sight across *g*, *e* coincides with sight from *c*.

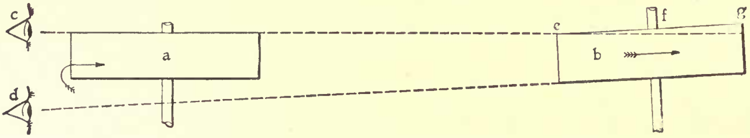

FIG. 95.—DOUBLE-SIGHTING OVER PULLEYS.

Previous to moving shaft through *b*, the alinement of both shafts should be tested, for there is a possibility that the shaft at *a* may be the one in error, in which case shaft *b* should not be moved, and it will be necessary to move one of the pulleys along its shaft in order to make them line up after the shafts have been placed parallel. With pulleys 36 inches in diameter, a great degree of accuracy can be obtained by sighting pulleys as above—accuracy not only in alinement of the pulleys, but provided the pulleys are truly finished and set on their shafts, accuracy in the alinement of the shafts.

A Final Transit Test.

Everything being found properly adjusted while sighting the pulleys as above, it is well to give the shafts a final transit test, or failing the transit, to go over the line again with straight-edge and spirit-level, and to again test the alinement of the shaft with the targets or station stones. In the final test, to be described, the same method should be followed which would be used were the shafting to be overhauled after it had been running a considerable length of time. It will be assumed that the millwright does not know the condition of the shafting, and desires to find out whether or not it is straight and level.

Place the transit on the station stones and pick up the shaft line, or take up that line from whatever targets may be available for that purpose. Replace the leveling-rod head on its rod, or put it on a plain piece of square rod. Place the free end of the rod against the shaft, hold the rod horizontal, and set the sliding head to a sight from the instrument cross-hairs, then carry the rod to the next bearing and test the shaft at that point. If the cross-hairs cut the same point on the rod, that portion of the shaft is O. K. Proceed in that manner to each bearing. Where the 4 7/16-inch shaft is encountered, it will be necessary to shorten the rod by sliding the head along ¼ inch, and when the 3 15/16-inch shaft is arrived at again, the rod must be restored to its original length.

Any variation found at any of the bearings must be corrected by moving the bearings at which any variation is noted, and moving that bearing the amount indicated by the cross-hairs and the rod target. To level the shaft, or to test its level, another tool will be convenient, or an addition of the leveling-rod shown by Fig. 4. An outline of this tool is shown by Fig. 96. It differs from the regular leveling-rod as shown by Fig. 4 only in the hook *c*, which is screwed into the end of rod *a* or fastened firmly thereto in any convenient manner.

When the rod is in use, the hook *c* is placed over the shaft, and being made of ½-inch soft steel it can be placed in a very narrow space between pulley and hanger or hanger and collar. The hook should be so shaped that the rod will hang in a vertical position, thus becoming self-plumbing. A hole is bored in the sliding head *b*, and a clip of some sort pushed into the hole to support the bit of pipe *d,* capped at its lower end, filled partly with kerosene oil and finished with a wick in the upped end. The little torch thus provided serves to light the sliding head so that a decent sight of it may be had through the telescope. A candle may be used in place of the torch, but as that keeps getting shorter it is not quite as convenient as the torch.

When the leveling-rod is not at hand, or it is too much work to rig up the hook *c,* a very good substitute for the entire rod may be made by bending up a piece of round steel as shown at *e,* a rod ½ to ⅞-inch may be used as at hand. A common set collar at *f* answers the purpose of a sliding head, and the torch carrier is drilled into the same collar. The sighting is done at the upper edge of the collar, the mark *g* showing where to set the collar when the larger length of shaft is met up with.

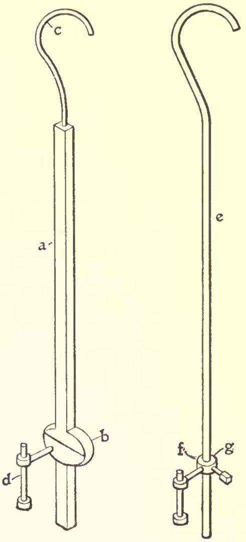

FIG. 96.—RODS FOR LEVELING SHAFTING.

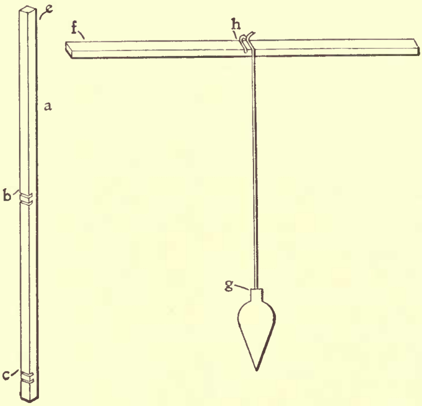

FIG. 97.—PLAIN LEVELING AND ALINING RODS.

The writer has often used the transit for both alining and leveling when nothing but a bit of plain stick was available, the "button-hook" rods not being forthcoming at the time they were needed. Fig. 97 illustrates the manner in which a bit of board, ⅞ inch square, is used without any heads or hooks.

The upper end of the vertical stick *e* is placed against the shaft, either under or over as the case may require, and a mark *c* is made where the cross-hair cuts the stick. Another mark, ¼ inch above the first mark, is made for use on the large section of shaft. The stick is carried from one bearing to another and sighted as described, an assistant holding a lantern, if necessary, so the mark can be seen.

For alining the shaft, the stick is held horizontally as shown at *f*, with the end thus marked against the shaft. A transit sight is had at the stick, and the marks at *h* show where the cross-hair cuts across the stick. In many instances it is not easy to see the rod from the transit station, owing to the bridge-trees and other timbers. In this case, run a fine saw into the stick on the marks and hang a plumb-bob, as shown, sighting at the plumb-line *g*, which hangs down in easy sight from almost any transit position.

TESTING SHAFTS WITHOUT THE TRANSIT.

When the shaft must be tested without the use of the transit or other telescope instrument, stretch a line conveniently above the shaft and a few inches to one side. Hang a plumb-line opposite the point to be tested, and after the bob-line has come to rest, carefully measure from the line to the shaft, placing a bit of thin stick against the shaft and marking the stick where the bob-line hung past it. Carry the stick to each point in succession which is to be tested.

To test the level of the shaft, a straight-edge should be used and placed upon two distance pieces which will reach from the straight-edge, when placed above the pulleys, down to the shaft. Three men are needed for this work, two to hold the distance pieces and the straight-edge, the other men to work the carpenter's level which is applied to the straight-edge as directed for leveling foundations, page 38. The bearings are to be raised or lowered as indicated by the level and straight-edge.

It is a common occurrence to see millwrights apply the level direct to the shaft. This method is all right under certain conditions, but there are times when it is not to be depended upon. Every shaft must sag a little between supports, and if the level be applied near one of the bearings, it will not indicate exactly the same as when applied at the center of a span. Again, where there are heavy pulleys a few inches from a bearing, as all pulleys should be placed, and the level is applied just outside of the pulley, it is not once in a hundred times but what there will be found sufficient deflection in the shaft to lead to a considerable error when the shaft is used as a straight-edge.

CHAPTER XIII.

Belts and Belting.

The shafting described in the previous chapter, together with the several counter shafts and machines, are supposed to be in position, ready for the belts. The several pulleys, as laid down on Fig. 81, are supposed to be of proper face width to carry the required amounts of power. We will not check these, as that business should have been done when the factory was first laid out, but we will check the engine belt and see under what conditions that appliance will have to work.

It is required to transmit 100 h.p. from a 120-inch pulley running 85 r.p.m. This corresponds to a belt speed of about 2670 feet a minute. One hundred h.p. means 3,300,000 foot-pounds a minute, and 3,300,000÷2670=1235 pounds pull on the belt. Allowing 20 inches of belt width, there would be a pull of 1235 ÷20=61.8 pounds pull to the inch of width. This is a bit more load than called for by the rule of "40 pounds to the inch of belt width" as stated on page 133, chapter VIII. But 60 pounds to the inch is allowed by some designers, and so is 88 pounds, but as that matter has been settled by the maker of the engine we can do nothing with it at this stage of the game. In fixing the width and diameters of pulleys in other parts of the transmission, the width should be decided by the method above described.

But it is a good deal of work to make the calculations as above for each and every pulley we may have to deal with throughout the mill, and a table or diagram can be easily made which will show at a glance the amount of power any belt will transmit under 40 pounds to the inch pull, and at the given (200) number of revolutions.

A Belt-Width Diagram.

In making up a diagram to fit any width and diameter of pulley the millwright will do well to look up the following formula, where

H.P.=Horse-power transmitted.
W=Width of belt, in inches.
D=Diameter of pulley, inches.
N=Number of revolutions=200.
P=Pull on 1 inch of Belt Width=40.
$\pi = 3.141$

$$\text{H.P.} = \frac{W\ D\ \pi\ N\ P}{12 \times 33{,}000}.$$

Thus a 72-inch pulley running 200 r.p.m. under a belt pull of 40 pounds will transmit: $\text{H.P.} = \frac{1 \times 72 \times 3.141 \times 200 \times 40}{12 \times 33{,}000} = 4.56$ h.p. with a belt 1 inch wide. In order to transmit exactly 4 h.p., the pulley should have a diameter of $4 \times 72 \div 4.56 = 63.1$ inches.

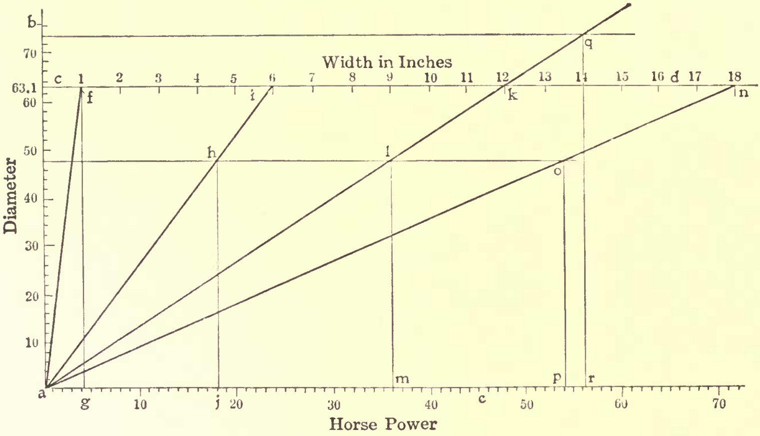

FIG. 98.—LAYING OUT A BELT-POWER DIAGRAM.

From this data, the millwright can construct the diagram as follows:

Draw a vertical line, as at *a b,* Fig. 98, and divide it into equal parts, each part representing 2 inches of pulley diameter. On the point representing 63.1, draw the horizontal line *c d,* and divide this into any number of equal parts, each one of which will represent one inch in belt- or pulley-face width. It makes no difference to what scale these lines are drawn, whether they are to the same scale or not. Any convenient scale may be used which will fit the paper.

At the bottom of line *a b,* draw the horizontal line *a c,* and divide this into equal parts, four of which make one part on line *c d.* For convenience, the same scale may be used for lines *a e* and *c d,* dividing *a e* into small parts and taking four of these parts of each division on *c d.*

The use of the table can now be tested. What power will a 1-inch belt deliver on a pulley 63.1 inches in diameter, running at the stated speed and pull? Look along the vertical line of pulley diameters and at 63.1 follow horizontally to the point indicating 1 inch of belt-width, which is at *f.* Follow this line vertically downward to the horse-power line *a e,* and at *g* it will be found that line *f g* passes through the 4-horse-power mark, hence the 1-inch belt on a pulley 63.1 inches in diameter is good for 4 horse-power.

If we desire to find the power of a belt 6 inches wide on a 48-inch pulley, draw the diagonal *a i* from 6 inches on the 63.1 line, then from 48 on the diameter line; intersect the diagonal *a i* at *h,* then drop vertically to the horse-power line where is found 18 h.p., the power of a 6-inch belt under the conditions named. To test the matter, pass along on the 48-inch line to the diagonal *k a,* drawn from the 12-inches mark. These lines intersect at *l,* from which point drop to the h.p. line at 36, which is just twice 18, showing that the principle of the thing is correct.

This matter may be still further tested by drawing diagonal *n a* from the 18-inch belt point, intersecting the 48-inch pulley line at *o,* and falling to *p,* where is found 54 h.p., which is in direct ratio with the 18 and 36 h.p. already noted. Should it be necessary to work with larger pulleys than are indicated on the diameter line, the diagonals may be extended indefinitely, as shown at *k q,* where the 12-inch belt diagonal is run out to intercept the 72-inch pulley line. This shows 56 h.p.

From the points obtained in the diagram shown by Fig. 98, the millwright may construct the chart complete by simply drawing in the horizontal, vertical and diagonal lines, working at all times from lines *a b, c d,* and *a e,* stopping only at the limit of the paper or the pulleys to be worked. Fig. 99 shows the completed diagram or chart, and all possible combinations of belts and pulleys may be taken directly from it, for the pull and speed named, of course.

A piece of cross-section paper is very convenient for the laying down of diagrams of this kind, and that paper was used in

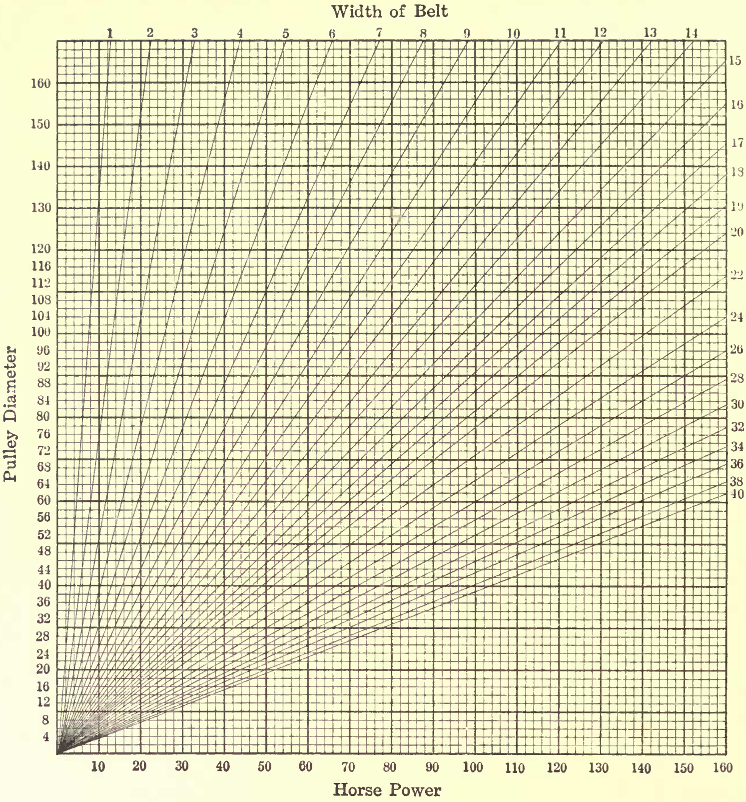

FIG. 99.—PULLEY, BELT AND HORSE-POWER DIAGRAM.

making up the large diagram shown by Fig. 99. To enable large pulleys to be charted, the diagram was extended at the top, and instead of working from the 63.1 line, that quantity was doubled, making it 126.2, and the diagonals were drawn from that line.

USES OF THE BELT DIAGRAM.

It is required to determine the width of belt necessary to transmit 18 h.p. from a pulley 28 inches in diameter. Run up from 18, taken on the h.p. line at the bottom, until that line intersects with the horizontal line from 28 on the left. At the intersection of these two lines, a diagonal is found, which when followed to its upper end terminates at the figures 10. Thus a

10-inch belt is required to do the work under the given conditions.

To find the power of the belt at any other number of revolutions, divide the power obtained from the diagram by 200 and multiply the quotient by the speed at which the belt is to run. For instance, what would be the power of the belt above described were its pulleys running at 175 r.p.m. instead of 200? The answer is $18 \div 200 \times 175 = 15.75$ h.p.

Finding the Length of Belts.

After the pulleys are erected, the best way of obtaining the length of a belt is to measure it. But that seemingly simple matter is easily said but hard to do with any accuracy. If a string be used to measure around the pulleys, it is apt to stretch considably under the tension necessary to tighten the cord to the sag at which it is desired to run the belt. Then when the string is laid loosely on the floor beside the belt, and not under tension, its length may be anything but right and the belt is apt to be cut too short.

A steel tape is the best thing for use when measuring around a couple of pulleys. An ordinary non-stretching tape line answers fairly well and is far ahead of a string. A wire answers well. If a string must be used, try to remember how hard was the pull exerted on it when taking the measurement, and put on the same amount of pull when measuring the belt.

In either case, whether the belt be measured by a steel tape or by a tensional string, there should be made some allowance for the stretch of the belt when placed upon the pulleys. It is usual to allow ⅛ inch to the foot for the stretch, therefore the belt must be cut short 1 inch for every eight feet of its length. In a 72-foot belt, it would be cut $72 \div 8 = 9$ inches short of the string measurement.

But the question of belt measurement comes up before the shafting has been erected. The millwright knows that two shafts are to be erected with 18-foot centers, and that a 36 and a 24-inch pulley are to be placed upon the respective shafts and connected by a belt. How long will be the belt? That is the question the millwright is required to accurately answer "p d q," for the belt must be ordered at once without delay.

LENGTH-OF-BELT CHART.

A chart or diagram may be constructed very easily from which may be taken instantly the length of belt necessary to wrap half way around each of a pair of pulleys. While the chart does not take into account the slight difference due to the difference in arcs of contact of belts over pulleys of unequal diameter, the error thus caused is very slight, and is only a very few inches in extreme cases of a very large and a very small pulley.

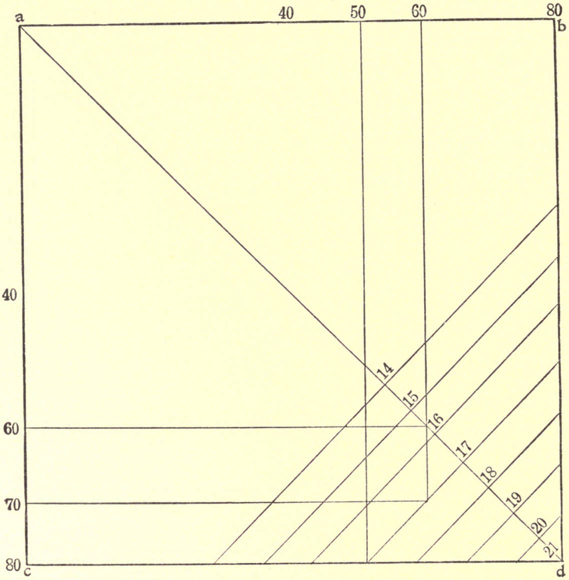

FIG. 100.—LAYING OUT A LENGTH-OF-BELT CHART.

For instance, should it be necessary to belt a pair of 80-inch pulleys the length of belt taken up by wrapping half way around each of the pulleys will equal the circumference of one of the pulleys, and this is $80 \div 12 \times 3.141 = 20.93$ feet; so close that we will call it 21 feet. To originate the chart or diagram, draw the line *a d,* Fig. 100, making it 21 parts long by any convenient scale. This line should be drawn at an angle of 45 degrees with lines *a b* and *a c,* which should then be divided into 80 equal spaces, each space representing 1 inch of pulley diameter.

The diagonal line *a d* should also be divided, but into 21 equal parts, each part representing one foot of belt. Through these points the lines 14, 15, 16, etc., should be drawn and marked with the figures mentioned, commencing at *a*, which represents 0, the next division 1, etc., the last division 21, occurring at the intersection of lines *c d* and *b d*.

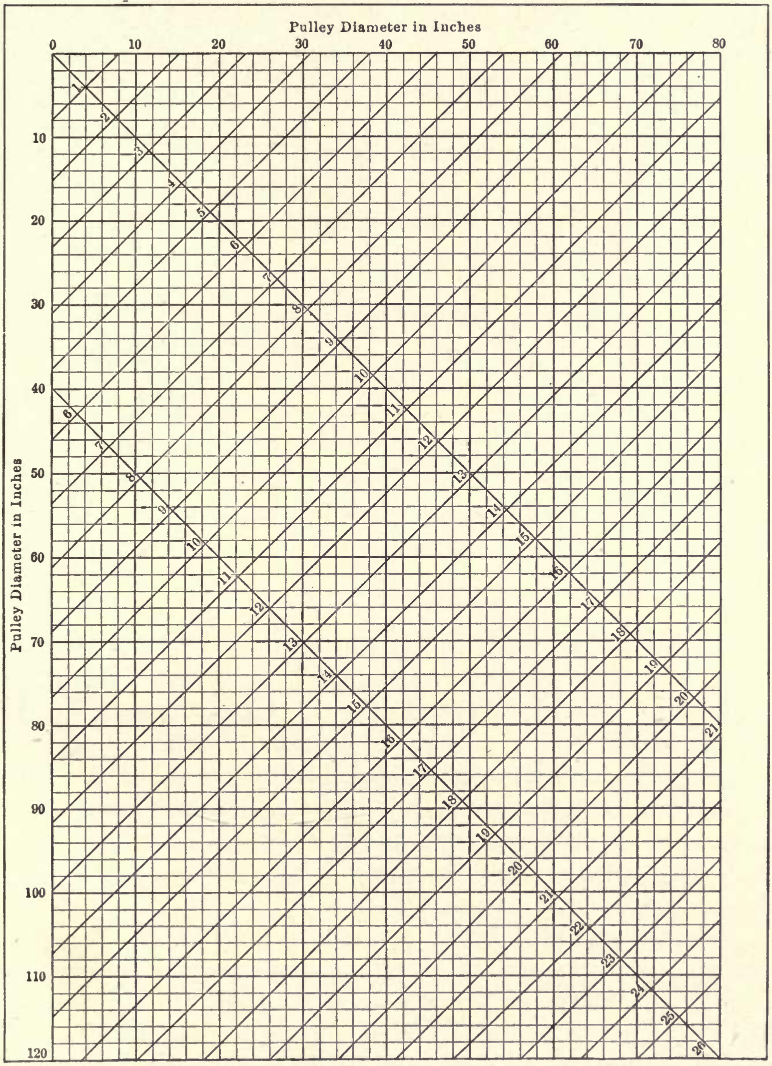
Numbers on Diagonals give Length of Belt Wrapping Pulleys

FIG. 101.—LENGTH-OF-BELT CHART.

Tracing out the lines leading from 60 to 60 it is found that they intersect upon the main diagonal *a d,* and that the point of intersections lies between cross diagonals 15 and 16; hence the length of belt necessary to wrap half around two 60-inch pulleys is about 15 feet, 8 inches. If we require the length of belt wrap for pulleys 60 and 70 inches in diameter, we find the lines from those figures intersect nearly on the 17 line, at some distance from diagonal *a d,* but this makes no difference, and 17 feet may be taken as the length of wrapped belt on pulleys 60 and 70 inches in diameter.

The intersection of the 50 and the 80-inch pulley lines also falls on diagonal 17, and we find that it requires as much belt on pulleys 60 and 70 inches in diameter as it does on two pulleys 50 and 80 inches.

Having arrived at the method of constructing this chart, it may be developed for all pulleys up to 80 and 120 inches as shown by Fig. 101. The method of using is as follows: What length of belt will be required to connect pulleys 36 and 48 inches in diameter on shafts 19-foot centers? The chart shows that pulleys 36 and 48 inches require about 10 feet, 10 inches, or we will call it 11 feet, of belt. Twice the distance between shafts is 38 feet. Eleven feet+38 feet=49 feet of belt necessary for the purpose.

SELECTING BELTING.

Probably there is no subject which proves more vexatious to the millwright than that of belting. There are so many kinds of material, so many varieties of each kind, and as many more grades of each variety, that it requires a wise man to get the most for his money when buying belts. Most people have a prejudice in favor of some particular material for belts, either leather, rubber, or cotton, and when this prejudice is a deciding factor the millwright has only to determine which variety and which grade to select—and that's enough.

The points which should be looked to in leather belting are the length of lap—which is the principal determining factor—and the appearance of the surface. The weight has something to do with a selection, and the requirements are that belting shall weigh not less than 16 ounces to the square foot. But this specification, which is particularly required by the U. S. Government, is of doubtful value on account of the facility with which leather may be "stuffed" with oil and other substances to give it he required weight. The appearance of the leather is the best indication of its quality. This and the presence of the middle of the back in each strip—for belts more than ten inches wide—are the factors by which to judge a leather belt, and experience is the only way of acquiring a knowledge of leather so as to judge by its appearance.

Requirements of Leather Belting.

The principal requirement, as stated above, is the length of lap, which cannot be more than 4 feet 6 inches in a first-class belt. In fact, the mere presence of a piece of leather longer than the stated length condemns the belt to second quality. The reason is, the hide of an ox will not yield a strip of leather more than 4 feet 6 inches long without running into the neck, a part of the hide which when made into leather will surely stretch out of shape more or less. Some inferior belts may be found with strips of leather, "laps" they are called, as much as nine or even ten feet long. The best thing these belts are good for is to sell, and the belt dealer is the only man who reaps a benefit from such belts—and even then he gets the name among his patrons of selling poor belting; therefore the "rubber-neck" belting may not be a benefit even to the dealer.

One concern which makes leather belting uses the side pieces for making what they call "quarter-turn" or "reel" belts. These are made from side strips cut down near the belly and they are supposed to be made up with the side of the strips which were cut off toward the back, all laid the same way; that is, the side of each strip which grew nearest the back of the ox is kept on the same side of the belt all the length of the made-up strip. When a quarter-turn belt is fitted from the specially prepared belting, the back edge is so placed that it is on the short side of the belt, and the belly side of each strip of belt, which side is naturally the longest, does the stretching act as the belt passes around the angularly placed pulleys upon which it must run. Thus the "special" belt for quarter-turn pulleys, which is sometimes sold at an advance over good short lap belting, is really an inferior product which should really be sold for less instead of for more than good short lap middle-back belting.

Selecting Rubber Belts.

The two determining qualities in rubber belting are the weight of the cotton duck from which the belt is made and the weight and quality of the supposedly rubber coating. Rubber is becoming so scarce and so high priced that hundreds of substitutes are used and real rubber may soon become exceedingly scarce.

Some "rubber substitutes" have the bad habit of peeling from the cotton as soon as the belt gets to working. There is no way which the writer is aware of by which it may be determined whether or not the belt will peel or split. The only way is to try it, and buy the belting under a guarantee for its replacement if it splits or peels under fair usage.

But in this matter there is another side in which the belt maker should be protected. Peeling and splitting of rubber belts sometimes take place when real rubber is used and the belt is first-class in every way. In cases like these, the belt maker should be protected against loading the belt to more than its safe working tension. It has already been stated that a belt which is not loaded to more than 40 pounds working pressure to the inch of width will never fail, slip or break. But the working strain is not by any means all the stress that comes upon a belt. A careless workman may put a belt on its pulleys in such a manner that it will not stand up under 40, or even under 20 pounds working pull. In fact, a belt may be placed upon pulleys so tightly laced or otherwise joined that it will not stand its own weight.

The determination of the "lacing stress" in belts will be discussed very shortly, and is mentioned here only to show that more belts fail on account of too tight lacing than fail on account of poor material being used in their making. The weight of rubber belts, and the thickness of the rubber coating, together with the weight of the cotton duck, are determining factors in selecting belts of this kind.

Impregnated Stitched Cotton Belts.

In selecting this belt, and there are hundreds of varieites and grades to be selected from, there is no way of ascertaining the actual worth of any given sample of belt, unless some physical tests are resorted to. The writer, for several years having to purchase much Gandy belting, hit upon the following specifications which all bidders were required to submit, and the purchaser could thereby make a selection at his discretion. This avoided being "pestered" a dozen times by a dozen belt salesmen, all very much in earnest, and each one selling "the best belting in the world."

DATA REQUIRED FOR SELECTING "GANDY" BELTS.

When the millwright is offered several dozen samples of stitched cotton belt, he may proceed to examine them as follows:

THE "PICK."

Cut the stitches in a portion of the belt sample and unfold a piece more than one inch square. Place a rule on the piece thus uncovered and count the threads in both the warp and the filling. Count first the warp (lengthwise the belt), then the filling, and specify the number of threads in each, thus: 10-12; 11-9, etc., always stating first the number of threads (picks) in the warp.

THE "WEAVE."

An "equalized weave" is the best. By this is meant that the warp and the filling have both the same number of threads in them. Ravel out a bit of the threads which make up the warp and the filling, untwist one of them, then the other, and see how many smaller threads each is composed of. The best belt, other things being equal, has the same number of small threads in both warp and filling, or, as the cotton-belt maker puts it, "the weave is equalized."

THE "STRETCH."

It is well known that these belts have a tendency to stretch unduly, especially under over-load. Under a working tension of about 40 pounds to the inch of width, they will not stretch excessively, provided they are properly woven. The "pick" has considerable to do with the stretch of a cotton belt. To test the stretch, make two cuts into one edge of the sample, say 3 inches apart. Be careful to make the cuts the exact distance apart in all samples tested, and 3 inches is a good distance for this test.

Having made the cuts, cut off the filling threads until a single yarn from the warp can be taken out. In the belt that piece of yarn was just three inches long. Strip it between the thumb nail and finger, rub off all the paint and dried oil, and straighten the fibers in that bit of string or yarn until all the kink caused by weaving has been removed. Do not elongate the string by untwisting it. This point must be carefully guarded against. It is the object to ascertain just how much possible stretch there is in the sample belt offered.

It is not possible that all the kink will be taken out of the threads when the belt stretches, but the removal of the kinks represents the limit of possible stretch in the belt, and it forms a good base for comparison, no matter how much the belt may stretch under ordinary or severe usage. We know it must break if the possible stretch—the straightening of the weave-kinks—is exceeded.

Having worked all the kinks out of the sample of warp, carefully measure it again, and note the increase in length. The sample may come out 4 inches long. This means that $\frac{4-3}{3} =$ 33 1/3 per cent. possible stretch. This is too much. A belt so tightly woven as to contain 33 per cent. of stretch, will cut itself to pieces much quicker than a looser weave. However, we must not go to the other extreme and take a flimsy belt which has nothing to it but length. Select the belts which give about 25 per cent. possible stretch. Choose them in preference to either the high or low percentages of stretch.

WEIGHT OF "DUCK."

Ascertain the weight of the cotton duck from which the belt is made. This material ranges from 8 to 20 ounces to the square yard, and insist that a square yard be weighed, not a yard of the width of narrow duck. A further specification for canvas (before it has been filled with oil) is, that after soaked in water for 10 hours, and rubbed to take out all the loading matter, it shall not lose over 5 per cent. of its weight.

THE "FILLING."

Impregnated stitched cotton belts are filled with various substances and mixtures ranging from linseed oil to fish oil and paraffin. The choice of the writer is for a filling which will not oxidize, hence the material resembling paraffin with which some makes of these belts are filled is desirable. The ideal condition in cotton belts is to have them made up "in the white" without any filling whatever, and then stuff them with cling-surface. Such a belt is perfectly elastic, water-proof and almost indestructible. It is a rather costly belt to begin with but it will give many years of service, and if loaded only 40 pounds to the inch of width, it will almost outlast the pulleys it runs upon.

To sum up the requirements for an "ISC" belt, they are, briefly stated: "Medium pick; equalized weave; 25 per cent. stretch; 10 to 20-ounce duck; and non-oxidizable filling."

BELT FASTENINGS.

The best fastening for a belt is the cement splice. It is far beyond any form of lacing, belt hooks, riveting, or any other method of joining together the ends of a belt. The cement joint is easily applied to leather and to rubber belts, but to make a good cement splice in an "ISC" belt requires more time and apparatus than the millwright has at his disposal for that puropse. Good glue makes a fine cement for leather belts and fish glue is less affected by moisture. Many of the liquid glues are fish glue treated with acid so as not to gelatinize when cold. A little bichromate of potash added to ordinary hot glue just before it is used will render it insoluble in water after exposure to sunlight.

LACING BELTS.

Belts fastened by lacing are weakened according to the amount of material punched out in making the holes to receive the lacing. It is preferable to lace with a small lacing put many times through small holes. Such a joint is stronger than a few pieces of wide lacing through a number of large holes. Figs. 102 and 103 illustrate two forms of belt lacing, one of which is far preferable to the other. The lacing shown by Fig. 102 is in a double leather belt 5 inches wide. The width makes no difference, as the strength will be figured in percentage of the total width.

There are four holes in this piece of belt, each hole ⅜ inch in diameter. The aggregate width thus cut out of the belt is 4×⅜ inches=12/8=1½ inches. Then 1.5÷5=0.30, or 30 per cent. of the belt has been cut away—nearly one-third of the total strength.

In Fig. 103, sketch A, a different method is followed. Instead of there being a few large holes, there are more smaller ones—one-fourth more, in fact. There are five holes, each 3/16 inch in diameter, making at total of 15/16 inches, or 0.9375÷5= 18¾ per cent., leaving 81¼ per cent. of the total belt strength against 70 per cent. in the belt with large holes. A first-class double leather belt will tear in two under a strain of about 500 pounds to each lace hole, the strain being applied in the holes by means of lacings.

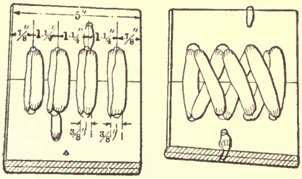

A. B.

FIG. 102.—A WEAK JOINT HOLES TOO LARGE.

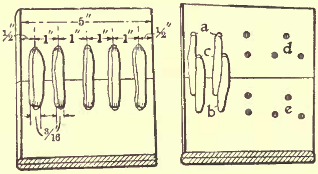

A. B.

FIG. 103.—GOOD JOINT—HOLES CORRECTLY PROPORTIONED.

Thus it would require 2500 pounds to tear the 5-inch belt with the small lace holes, while the belt with the large holes would only stand 2000 pounds. Were the belt to be figured boiler fashion, according to area of material left after the holes are punched, then, taking the tensile strength of leather to be 3000 pounds to the square inch, the belt shown by Figs. 102 and 103 being ⅜ inch thick will have a cross section of 5×0.375=1.875 square inches; deducting 30 per cent. of this for the holes, there remains 1.125 square inches of belt section, or enough to carry a breaking strain of 1.125×3000=3375 pounds. As the lacing of this belt broke it under a strain of 2000 pounds, it is evident that there is no use of paying for good leather and then wasting it in large lace holes.

The belt shown by Fig. 103, sketch A, has 81¼ per cent. of 1.875 square inches of section, =1.525 square inches left after cutting out the five holes. This amount of section is good for

3000×1.875=5625 pounds breaking strain, and as the lacing will tear out under 2500 pounds, it will be seen that we cannot afford to use lacings if the full power of the leather is to be utilized. This under a factor of safety of 5 would be 1125 pounds to the square inch, or 1125×1.525=1715 pounds working strain for the belt, or 1715÷5=343.5 pounds to each lace. This, too, is too much as it is less than a factor of safety of 2.

The belt to carry 40 pounds working tension to the inch of width must also carry about 40 pounds standing tension, making a strain of 80 pounds to the inch, or 80×5=400 pounds. This is a better showing and gives a factor of safety of 2500÷400=6¼. Still, we are wasting a belt of 5625 pounds ultimate strength in order to get from it 400 pounds working strain. This means a factor of safety of over 14 in the body of the belt but of only 6¼ at the lacing. Then let us declare in favor of the endless belt with cement splice.

Fig. 103 shows at sketch B a method sometimes used to relieve the lace holes of some of the strain. Double rows of holes are punched as at *a b,* and the lacing distributed among them. As far as helping the strength of the belt is concerned, this does nothing, for all the stress put upon the belt by the lacing at *c* must be carried by the belt section at *a,* therefore this way of punching holes does not increase the section strength. Neither does staggering the holes as shown at *d* and *e.* The form of hole-punching shown at *a b c,* sketch B, is desirable for another reason. It distributes the lacing very nicely and does not make such a lump to thump when it passes over the pulleys.

BELT HOOKS.

There are several styles of belt hooks in the market, and all of them are of value to the millwright in the order of their removing the least amount of cross section of belt. Blake's belt stud, as shown by Fig. 104, is a fastening which does not remove any of the belt. The hole is a slit made lengthwise of the belt as shown by Fig. 104 at *b.* These slits are all made with a special punch-cutter, the ends of the belt being laid together and both ends cut through at the same time, one hole through the two ends being cut at a time. One of the hooks is shown at *d.* It is bent in the manner shown to allow the ends of the belt to approach more nearly a flat position as shown at *a*, where two of the hooks are shown in place. A hook placed through one of the belt ends is shown at *c*. When these hooks are inserted, they are grasped by a pair of pliers made to fit the hooks, and each hook is separately thrust through the ends of the belting longitudinally with the slits, then the hooks are turned crosswise as at *a*. After the hooks are all in place, the ends are hammered lightly while resting on a pulley or some hard surface, and the hooks are thus well bedded in the leather. The great trouble with these hooks is that they are very slow of application. Their good points are many: They maintain the full strength of the belt, no material being cut away. They waste but 1 inch of the belt when taking up, they may be removed and used over and over again.

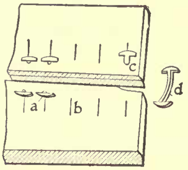

FIG. 104.—BLAKES' BELT STUDS.

Bristol Belt Hooks.

Fig. 105 illustrates another belt fastening which loses but very little belt section, the points of the fastenings being driven down between the fibers and cut but very few of them. One of the fastenings driven into place is shown at *a*, while another clip is in place at *b* all ready for the hammer, which is the only tool required for applying these fastenings. As may be seen at *c*, the points which go through the belt are very slim and quite small. They are made of rolled steel and will stand a heavy strain without breaking or bending.

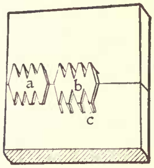

FIG. 105. BRISTOL BELT FASTENINGS.

These fastenings are made in various lengths and sizes to fit any and all belt thickness and width. After the hooks have been driven, the ends of the belt should, as shown in the engraving, lie evenly and close together. If the fastenings are driven properly, the belt-ends will be drawn closely together, but if the steel points are allowed to wander away from the end of the belt a little, the job will not be a good one. The points should project through the belt between 1/16 and 1/12 inch after having been driven through the belt into a piece of soft wood placed underneath. Then the belt should be turned over, placed upon something solid—the rim of an iron pulley or a bit of railroad iron—and the points clinched and driven back into the belt. They should be driven in so far that they cannot touch the pulley at all, and upon the manner of the clinching and driving depends largely the value of this excellent fastening—a very desirable one when properly selected and applied.

THE JACKSON STEEL WIRE LACING.

This belt fastening, as represented by Fig. 106, is a most excellent one, and is applied by a hand-driven machine which may be kept in the storeroom and the light belts brought to it, or it may be mounted on truck wheels and taken to the belt when a heavy one is to be mended. As represented by Fig. 106 the fastening is made right in the belt, a coil of steel wire being fed from, by the machine and wound into a helix which pierces the belt at every turn until it extends entirely across the end of the belt, as visible at *a*. After the wire has thus been screwed into the end of the belt, it is placed in the machine and flattened down level with the surface of the belt, as shown at *c*. It is required that the steel wires be well pressed or hammered into the leather, and if they are entirely imbedded, they will not be cut or worn by the pulley.

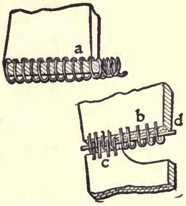

FIG. 106.—JACKSON STEEL-WIRE BELT FASTENING.

After the coils have been flatted as described, the other end of the belt is brought around as at *c*, the wires intermesh as shown, and a wire or rawhide string *d* is placed inside the wire loops as shown, thus forming a hinge lacing which is perfectly flexible and which cuts but very few fibers. It is safe to call this fastening equal to 90 per cent. of the belt strength. A piece of string may be used in place of the wire *d*, if preferred. This lacing wastes but one-half inch of the belt when necessary to put in a new wire, and the joint may be taken apart at will by simply removing the wire or leather string *d*.

THE "CREEP" OF BELTS.

Owing to the elasticity of belts—that quality which permits a vertical belt to transmit power—there is a certain amount of movement of every belt in an opposite direction to the motion of the belt around the pulleys. This movement is very small in amount. It is called the "creep" of the belt, and it is usually taken as 2 per cent. of the actual velocity of the driving pulley. When a belt approaches the driven pulley B, the belt is under the least tension, as it is then the slack or return fold and does no work except that of holding itself against the tension of its own weight while suspended between *a* and *h*. The method of ascertaining the amount of tension in this fold and in the working fold of the belt will be described in chapter XIV.

When the belt is running in the direction of the arrows, Fig. 107, and is driven by pulley A, if marks were to be made at *a* on the belt and at *b* on the rim of the driven pulley, exactly opposite mark *a*, then the pulley revolved by the belt, it would be found that when the mark *a* left the pulley it would no longer coincide with mark *b* but would be some distance ahead of that mark, as shown at *c* and *d*, the former being mark *a*, and *d* being mark *b*. The reason why these marks have left each other is that when the pull of the driver became felt by the belt as it passed around pulley B, the belt was stretched a certain amount by the strain put upon it, hence the belt was pulled ahead of the mark on the pulley. The amount the belt thus gets ahead of the pulley is about 1 per cent. of the distance traveled by the belt.

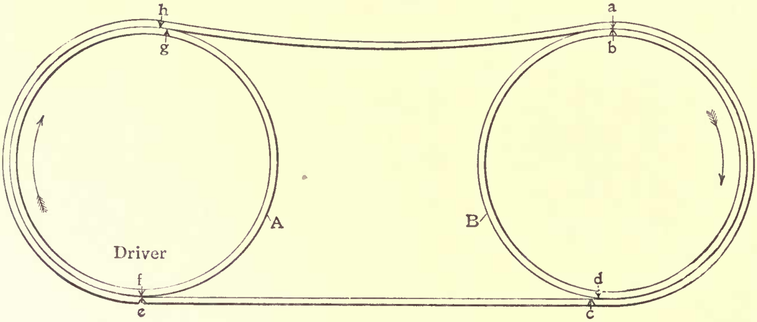

FIG. 107.—THE "CREEP" OF BELTS.

At the driving pulley A another and similar lag takes place between the belt and the pulley face. Marks are shown at *e* and *f*, upon belt and pulley respectively, and these marks coincide at the point shown, but as the pulley revolves, dragging the belt with it to the point *g*, the tension upon the belt is released and the elasticity of the belt causes it to shorten to its normal condition again, falling back from *g* to *h*. In this case the belt has fallen behind the pulley. On the driven pulley B the pulley has fallen behind the belt. In both cases the loss is about the same, and both go to make pulley B revolve slower than pulley A to the extent of another 1 per cent., making a loss of 2 per cent. in all.

In laying down belt power transmissions, where considerable exactness of speed is required, it is necessary to allow about 2 per cent. for the creep of the belt, and if the driven shaft B were required to run at exactly 100 r.p.m. it would be necessary to give the driving shaft A a speed of 102 r.p.m. in order to make up for the creep of the belt in the manner described. Thus, for a shaft belted 7 removes from the prime mover, the speed of that mover would have to be increased nearly 15 per cent. (14.86) to make up for the creep of belts.

The above allowance is a very important one when exact speeds are required, and it explains why, in some cases, the actual speed does not come up to the requirements, even though the pulleys all figure correctly to give the required speed.

PUTTING BELTS ON PULLEYS.

Some workmen have developed the very bad habit of splicing belts together off the pulleys and then running them on. While this answers very well for small, light belts, it should never be practised with a belt more than 8 inches wide. The writer has seen belts—even engine belts—over 14 inches wide, roped to the sides of their pulleys and run on by power, to the detriment and lasting injury of the belts thus mismanaged. A wide belt being forced over the sharp edge of a pulley is subject to very severe strains, and in some cases the fibers are strained beyond their elastic limit by so doing.

Whenever a belt of more than 8 inches in width must be placed on its pulleys, then use a belt clamp and do the work in a mechanical manner. There are various kinds of clamps to be obtained, some very crude, others well made and with the nuts geared together so that turning a single crank or rachet operates both sides of the clamp. In case of very heavy belts, it may be the thing to pull the belt almost into position by means of a rope tackle. To hitch this to a belt, simply lay a plank or short piece of timber on either side of the belt, take a timber hitch around the wood, as shown by Fig. 108, and go ahead with the hauling.

A hitch of this kind will hold the belt securely and there is no danger of cutting or otherwise injuring the belt as if the rope were attached directly to it. When using the belt clamps, particularly those of inferior design, trouble may be met with through the slipping of the belt, the clamps not holding it securely. The usual remedy in such cases is to hold a plank under the belt close against the clamp which slips, place a bit of board in similar position of top, and drive nails enough through the board and belt to hold the latter securely.

It usually requires but very little in addition to the clamps, defective though they may be, to hold the belt, and the best way in case the clamp does slip is to apply a couple of double-screw hand-clamps close against the jaws of the belt clamp. This will do the business as well as the nails, and it does not tear or otherwise disfigure the belt.

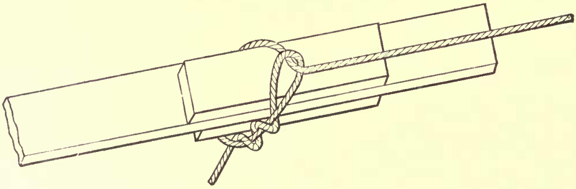

FIG. 108.—ROPE-HITCH FOR BELTS.

Frequently, trouble of this kind is caused solely by attempting to tighten the belt too much. More strain than the workman has any idea of it put upon the belt, and the pressure upon the shaft bearings is as great as the tension in the belt. The strain caused in any belt by drawing the ends together until it hangs in a very flat curve is measured entirely by the weight of the belt, the distance between the pulleys, and the sag of the belt between the points of support. The next chapter will describe a method by which the strain in a belt may be ascertained by the sag between the pulleys, and the power actually transmitted by the belt may be calculated with considerable accuracy by the sag, weight and distance above mentioned.

CHAPTER XIV.

SETTING UP MACHINES.

The actual work of getting machines off of a car or boat into the shop and into their proper positions belongs to the rigger more than to the millwright, but the millwright is supposed to be as good a rigger as he is carpenter and blacksmith and to be able to handle all sorts of tackle like a stevedore, tie knots like a sailor, and judge weights and distances by the unaided eye like the combination of a standard weighing-scale and a range-finder. All this is in a day's work and the millwright does it as a matter of course, doing it better or worse according to his experience and skill.

SKIDS AND ROLLERS—THE "WHISKY" JACK.

The most common method of unloading machinery is the time-honored skid and roller, each machine being pried up by bar, lever and "bait" until skids and rolls can be placed underneath and the machine can be moved along to its proper position. The screw-jack is the mainstay of the millwright for this kind of work, though a "whisky"-jack is a great time and labor saver. The "whisky" or hydraulic jack is merely a small hydrostatic press made in portable form, the pump being contained inside the plunger, the cylinder forming the body of the jack. The "whisky"-jack is so-called because it uses alcohol as a liquid for operating the hydrostatic part of the jack. Water may be used in summer, but it is apt to rust some of the parts, and in cold weather it freezes. When the "whisky"-jacks first were put into use with their reservoirs filled with nice grain alcohol, some of the workmen promptly rose to the opportunity, drank the alcohol and filled the jacks with more water.

THE OPERATION OF "WHISKY" JACKS.

To operate one of these jacks, insert the lever so that the shoulder on one side of the lever will project downward and strike a lug on the head of the jack. An ordinary pumping movement of the lever will then force the liquid out of the piston into the reservoir underneath it, causing the jack piston and head to rise according to the bulk of liquid displaced. To lower, reverse the lever, turning the lug uppermost, then bear down on the lever and the valve in the pump will be forced to open, allowing the liquid to pass back into the piston reservoir. In some jacks this form of construction is reversed, the piston standing upon the foot or base and the cylinder being attached to the head of the jack. Sometimes the arrangement of the pump lever is opposite that described above, the lug being placed uppermost, and a lifting motion being necessary to lower the jack after the lever has been reversed.

THE BALL-BEARING SCREW-JACK.

There is also a most excellent form of jack known as the "ball-bearing screw-jack," in which there is a set of balls between the end of the lifting screw and the head of the jack. As friction usually consumes more than one-half the power applied to the plain screw-jack, the value of the ball arrangement is obvious. In this jack there is a pair of miter gears with a ratchet arrangement on the power lever, thus making it possible to "pump" this excellent form of jack the same as the whisky-jack, and the ratchet attachment permits the jack to be worked in restricted quarters equally as well as the other.

In operating any and every form of jack, the one point to be closely watched is the distance which the jack has been extended. In the whisky-jack, too great an extension will permit the cylinder to be scored by the piston or plunger, and the jack becomes useless until machine-shop repairs can be made. In any form of screw-jack, the same danger exists, but if the jack be extended too far, the thread may be stripped off the screw or out of the nut, and the unfortunate workman is sure of a "wigging" from the foreman for "slumping that jack."

CAUTION WHEN JACKING-UP MACHINERY.

The millwright should make it an invariable, infallible rule to always follow up very closely with substantial blocking any weight or machine which is being jacked up. Never trust a machine to jacks. Follow up with blocking as fast as the machine is raised, and build the blocking fair and square and heavy enough to carry the machine at all times should its weight be suddenly and unexpectedly dropped upon the follow-up blocking. Many a man has been mained for life or killed outright by neglect of the simple precaution of building adequate follow-up blocking. And "building adequate blocking" does not mean merely filling the space below the machine with blocks piled one on top of another. It means the construction of a substantial cribwork which will not cripple sidewise or "buckle" out, and which is plenty strong enough to carry the machine when the jacks must be set to a higher level. "Never allow two parallel blocks under a machine" is the only way in which to secure safe and substantial blocking when jacking a machine up or down.

Using Skids and Rollers.

Once a machine has been safely placed on skids and rollers, never move it an inch before adequate means have been devised for preventing a "run" or a "back run." When a machine goes ahead too far and gets off the rollers, there is a nasty job to be done in replacing the rolls, even if no damage be done to machine or to runway. No heavy machine should be started upon the rolls without first attaching a pull tackle and a back haul. The former may be either a heavy rope tackle, a set of differential chain tackle, or a cable and winding drum, as may be at hand. The back haul preferably should be a rope and block tackle heavy enough to stop the machine, though failing to possess block tackle for this purpose, a plain hitch may be made of a heavy rope which is "snubbed" around some convenient object, a post of a building, a "dead man" or even around one of the rails of the car-track.

The "Holler-Boss."

Above all things, when jacking, skidding or otherwise moving heavy machinery or raising the timbers of a building, see to it that only one man gives orders. Let one man do the "hollering" and give *all* the orders. The millwright may be the one to do this, but the writer has found that in every gang of workmen there is some one man who though he may not be worth shucks for doing actual work himself, still he can get a lot of work out of the others, and usually this sort of a man really does well in watching tackle, skids and rolls, and in making hitches and knots.

When such a man is appointed "holler boss" the millwright is at liberty to give his attention to the safety of the entire operation. The millwright should always respect the authority given to the "holler boss" and refrain from giving any orders direct to the men by giving all directions through the boss. Even on quite small jobs this method works to perfection, and it only requires a very short time to establish things upon a system which will permit the millwright to tell the boss to put such a machine or a certain timber in a certain position. The "holler boss" will do the rest, and not a single conflicting order will be heard during the entire operation. The millwright thus doubles his working capacity, he can have the machinery hoisting going on in good shape and at the same time have other gangs putting ahead other work. Meanwhile, he will keep an eye out in every direction for the "unexpected which always happens."

Using Differential Chain Hoists.

Any job containing an engine of at least 75 horse-power should be permanently supplied with two sets of differential chain tackle, one set having a capacity of at least one ton, the larger set having a capacity of three tons. In using tackle of this character the greatest caution should be observed to see that the tackle is not overloaded. When a chain is loaded too heavily, and the steel is strained past its elastic limit, the chain links stretch and fail to run smoothly in the wheels of the blocks.

The trouble is hardly noticeable at first, merely a little sticking of the chain at one or more points, but soon the chain refuses to run at all under a heavy load, the links climbing endwise over the pockets in the sheave or pulley and bringing up with a slam and a bang against the guide casting which prevents the chain from jumping out of the groove in the sheave. When this happens, it is necessary to slack back a little on the tackle, the chain adjusts itself in the pockets again, and a few more pulls can be made on the hand chain until another accumulation of length of the links forces another back pull. The only remedy for this is to obtain a new chain, the old one having become stretched through overloading. For this reason, avoid overloading chain hoisting tackle, and avoid any sudden yanking of the chain while the tackle is under load. Chain tackle is very tender in this direction, and it is easy to spoil a chain by very slight misuse.

Caution When Hoisting Machinery.

The workman is naturally careless and very apt to take needless risks. The one great caution necessary when hoisting machinery or other material is, "Never go or work unnecessarily under the suspended object." Men are careless, and all ropes and chains are bound to break some times; therefore the millwright who would avoid damage suits for his employers will see to it that no work is unnecessarily done under objects which are hanging from ropes, chains or cables. Remember that the rope or chain is bound to break "some time" and consider always that "some time" is right at hand and that the only safe way is to "stand from under." Keep from under yourself, and keep your men out too.

The Wire Cable and Snatch-Block Method.

The writer, having used differential chain hoists and rope tackle for many years in the erection of machinery and buildings, has found that there is a much better method of sending aloft timber, machines and parts of machines. The method referred to is by the use of a winch, or winding drum, some ½-inch flexible steel-wire cable and a number of single, double and four-fold blocks, including a few snatch-blocks. The winch or winding drum is to be permanently located upon the factory site in such a position that as soon as power is to be had the winding drum may be connected to line shaft or engine.

Meanwhile, permanently erect the winding drum, and lead the cable through the necessary snatch-blocks to any part of the mill where hoisting work is to be done. The text-books tell us that a steel cable should never be used on a sheave less than 30 diameters of the cable. That is good engineering where the cable is to be used for a long time, but a 19-strand wire cable will work well for hoisting over and around 6-inch sheaves such as are usually put into blocks for ¾-inch rope. When a light hoist is to be made, pass the cable through a single block and attach direct to the weight to be lifted. When more of a hoist is to be made, use a double and a single block and reeve the cable as for an ordinary rope tackle. When still heavier work is to be done, use the four-fold and three-fold blocks and double up on the cable accordingly, which should be from 250 to 300 feet long for a 100-horse-power plant and longer when the factory covers considerable ground.

Strength of Wire Cable.

Wire rope is made in a variety of ways, and the "standing" rope should not be mistaken for "transmission" rope, neither should the latter be confused with "hoisting" rope. The following table gives the weight to 100 feet, breaking strain and safe working load of various kinds of iron and steel-wire cables, ½ inch in diameter, with 19 strands and hemp core:

IRON AND STEEL WIRE CABLE.

19-strand, ½″ Cable, Hemp Core.	Weight to 100 feet.	Breaking Strain.	Safe Load.
Hoisting, Iron	35 lbs.	6,960	1,000
Hoisting, Cast Steel	39 "	14,000	3,000
Transmission, "7-wire" Iron......	31 "	5,660	1,500
Transmission, "7-wire" Cast Steel.	31 "	12,000	3,000
Transmission, "19-wire" Plow-Steel	39 "	20,000	4,000

It may be seen that ½-inch cable is made all strengths, but the "hoisting" is the only one which should be used for the severe work of passing around the small sheaves used for the purpose as described. The writer has used both iron and steel hoisting cable for this purpose and finds that the iron lasts the longest, but if the steel be worked under the light load tabulated for the iron, then the steel will outlast the iron cable.

With the ordinary two-crank winding drum as used on derricks, 1000 pounds is about all two men care to handle in the form of direct pull on the cable. With the winding drum geared 6 to 1, cranks 18 inches long and the winding drum 6 inches in diameter, arranged as shown by Fig. 109, the power exerted upon the cable by two men on the cranks would be about 16 pounds apiece, or 32 pounds in all. A man can exert more force for a short time on a crank, but this is all that the average man can continue to exert for any considerable length of time, and even with 16 pounds a man will want to stop and rest frequently.

The leverages of the crank, gears, winding drum, etc., are as shown at *a,* Fig. 109, and expressed arithmetically the leverage exerted as pull on the cable is as follows:

$$\frac{32\times18\times15}{2\frac{1}{2}\times3}=1152.$$

The pull on the cable will then, allowing nothing for friction, be about the 1000 pounds safe load with which it is credited in the table. Friction will cut down the strain exerted on the cable, and extra hard pulling will sometimes balance the friction loss, so that the cable will have about its 1000 pounds safe load as an average.

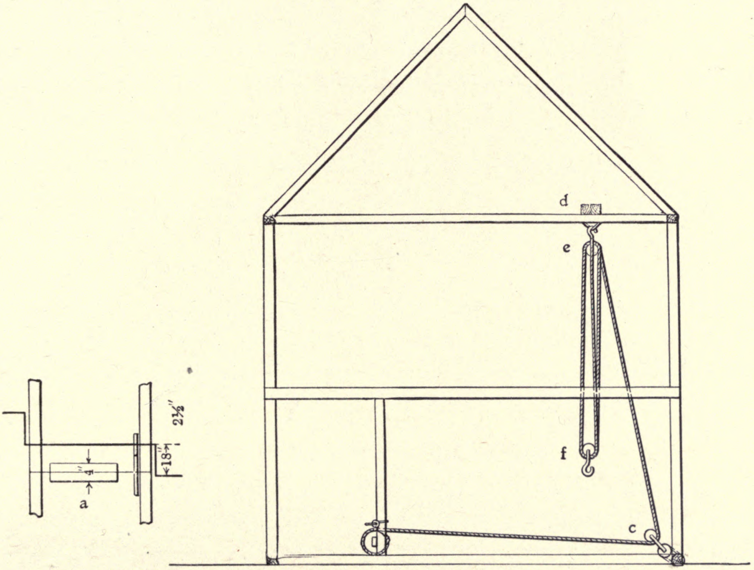

FIG. 109.—WIRE-CABLE AND SNATCH-BLOCK HOIST.

The manner in which the drum is erected against a couple of posts is shown at *b,* and the snatch-block located at *c* permits the cable to be lead in any direction, east, west, north or south, that may be required by the work in hand, the only requirement being that snatch-block *c* be located opposite the middle of the winding drum in order that the cable may lead square toward the drum at all times.

At *d* a temporary timbering is placed for attaching the four-sheave block *e,* and the three-sheave block *f* enables the 1000 pounds pull on the cable to sustain a load of 7000 pounds at *f*, or 1000 pounds for each fold of cable between blocks *e* and *f*. Should it be desired to work this tackle to the limit, a four-sheave block may be placed at *f*, and in that case, the dead end of the cable must be attached to the upper block, as shown by Fig. 109. In case a three-sheave block is used at *f*, then the cable must have its dead end attached to that block. In any rope or cable tackle, the ratio of the two forces—the power applied and the weight lifted—may be taken as the number of folds or rope shortened between the blocks *e* and *f*. Hence, with 2 four-sheave blocks there will be 8 folds of rope shortened, and the weight balanced at *f* by 1000 pounds pull on the cable will be 8×1000=8000 pounds, or 4 tons. Thus the wire cable and snatch-block arrangement combines all the lifting advantages of 1000-pound and 4-ton tackles.

STRENGTH OF IRON-STRAPPED BLOCKS.

It is important when arranging a hoist as above described that blocks be procured which will stand a load of more than 1000 pounds to each fold of cable. To this end, steel blocks should be obtained, unless very large blocks with sheaves made of metal and mounted on friction rollers can be obtained. For wooden—ordinary "mortise"—blocks, the usual strength is given by the B. & L. Block Co. for their iron-strapped blocks as follows:

WORKING STRENGTH OF BLOCKS.

Dia. of Sheave ins.	Regular Mortise Blocks Pounds.	Extra Wide and Heavy Mortise Pounds.
5	250	
6	350	
7	600	
8	1,200	2,000
9	2,000	
10	4,000	6,000
12	10,000	12,000
14	16,000	24,000
16		36,000
18		50,000
20		90,000

In using this table it is evident that it may be interpreted in much the same manner as the table of sheave diameters for wire rope. There the table is made up on a ratio something like 30 diameters of the cable for each sheave, and for our factory hoisting use we disregard the rule altogether, and instead of using a 15-inch sheave for a ½-inch cable, we put the cable through an ordinary 6-inch block which the table says is good for only 350 pounds, whereas we apply 1000 pounds load. In both cases we prefer to let the cable and blocks withstand the severe usage as best they may, because they are only subjected to it for short periods and at very infrequent times. Were the cable and blocks to be in constant use, then they should be calculated according to the tables, but for the very short time they are to be in use we will sacrifice them to saving in first cost and let them wear out. But it is well in selecting blocks to get them with as large sheaves as possible, for the reasons stated.

Placing Machines Upon Foundations.

Great care is necessary when placing machines upon ready-built foundations to prevent the cracking or crumbling of portions of the concrete or masonry. It requires considerable time for cement to become solid, and unless the foundation has been built for at least 28 days and has been kept constantly wetted during that period, it is unsafe to pry with a bar upon any portion of the foundation without first placing a thick plank, timber, or piece of iron at the point where pressure is to be applied. Therefore, it is necessary when placing heavy machinery upon green foundations to proceed with the greatest care to prevent damage or destruction to the not fully hardened masonry or concrete.

In cases of this kind, build heavy timber or plank runways, roll the machine to the exact position it is to occupy, then jack it down to the foundation, taking care to "cut and trim" the machine exactly by moving it by the jacks until it will settle into place without needing a single pry either sidewise or lengthwise.

It sometimes happens that after a machine has been placed upon its foundation it is found necessary to raise a portion of the machine or to elevate one side or one end a fraction of an inch in order to secure the required level. Sometimes this proves a very awkward bit of work as there is no chance of getting a jack underneath any portion of the machine, and in cases like this the wire cable hoist comes in very handy. It requires but a very short time to rig the four-sheave tackle over any point in the factory, and if the machine weighs not more than 8 tons, one-half of it may be easily raised by the winch and the heavy four-sheave tackle, thus avoiding the necessity of putting any strain whatever upon the foundation through the means of levers or jacks.

Lever and Cable-Hoist Lift.

When the heavy end of a machine must be raised as above described, and it is feared that the weight is beyond the capacity of any hoist available, then resource may be had to the combined lever and cable hoist shown by Fig. 110. This device may be used equally well with a jack or the differential chain hoist as with the wire-cable business. As shown, it consists of a heavy timber, one end of which is attached by a sling *g* to the lower block of the cable tackle. The other end of the timber rests upon a block placed across the top of the machine, as at *h*. At the other end of the machine—the end to be raised—the timber is made fast by means of a chain or a yoke to some convenient shaft or projecting portion of the frame, as at *k*. A pull at *f* will result in raising a load at *k* heavier than 4000 pounds in the ratio of the horizontal distances *g k* and *k j*. Thus, if *k g* be twice *k j*, then our limit force of 4000 pounds at *f* will handle 8000

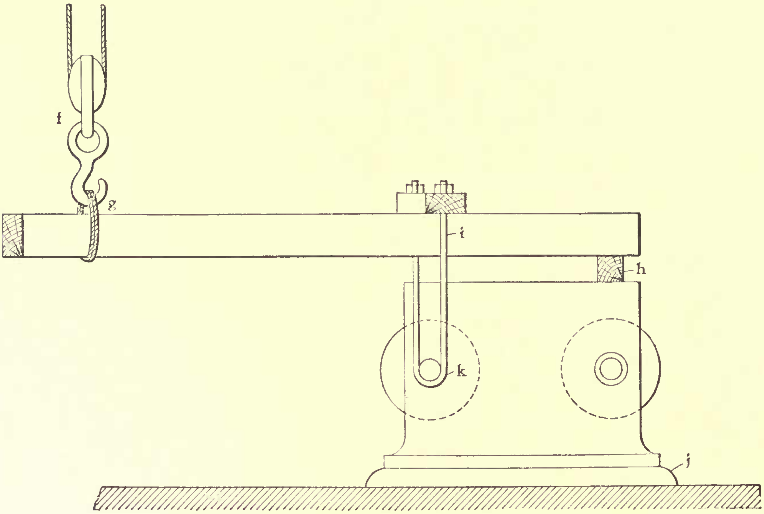

FIG. 110.—LEVER AND CABLE-HOIST LIFT.

pounds at *k,* thereby enabling a pretty heavy load to be lifted by 32 pounds exerted on the cranks of the wire-cable hoisting device.

FITTING A MACHINE TO ITS FOUNDATION.

The old-time method of fitting and leveling a machine to its foundation by means of the bush-hammer is pretty well out of date nowadays. That method went out of use with the hammered stone caps for machinery foundations. Nowadays it is good enough to level up the machine on steel wedges (scraps of flat iron from the boiler shop) and then fill between machine and foundation with brimstone or cement. The latter is as good as the brimstone, but it does not set as quickly. Common calcined plaster (plaster of paris or sulphate of lime) answers very well for leveling up with, though this substance will not withstand the action of acids as well as brimstone or cement.

THE PLASTER METHOD.

There is no fear of plaster proving too weak to carry any load likely to be placed upon it, for plaster mixed with one-half its weight of water will stand a pressure of 500 pounds to the square inch after setting one hour. At 24 hours it will withstand over 1000 pounds to the square inch, and after standing several weeks its crushing strength increases to over 2300 pounds to the square inch. This is as strong as most concrete, therefore the millwright need have no fear about using that material. The several determinations above mentioned were made by the author in person upon cubes 1 inch on a side.

Plaster to be poured should be mixed with more than one-half its weight of water. That amount gives a paste which can be shaken from a trowel but which will not drop without shaking. Ascertain by trial how much more water is needed to make up plaster which will flow freely, then weigh out charges of plaster and of water and have them at hand ready for use. After the clay or putty dams have been placed around the machine footing, mix together the water and the plaster, each charge ranging from one pound to ten pounds according to the size of the job. It is better not to mix more than ten pounds of plaster at a time. Mix the water and plaster as quickly as possible, and pour at once. Never wait an instant after they are mixed; pour quickly and paddle the mixture along into place if necessary. Above all things, do it quickly.

SETTING MACHINES WITH CEMENT, PLASTER AND BRIMSTONE.

Before the cement, brimstone or plaster filling can be turned loose, the machine must have been accurately leveled and alined with the main shaft—or with the permanent targets of the factory as described on page 231, chapter XII, and in chapter III, also in chapter XI, page 204.

When melting brimstone, use a vessel with a tight fitting cover. The brimstone is very apt to catch fire during the melting operation, in fact it will probably be on fire a dozen times before it is fully melted. Just put the tight fitting cover in place and the fire will go out. Brimstone burns very slowly, with a quiet and very small blue flame which is extinguished easily when air is prevented from reaching the brimstone. Use a very light fire and heat the stuff very slowly and do not heat too hot after it is melted. Brimstone heated to 600 degrees becomes waxy and does not flow readily. Therefore heat only hot enough to become fairly melted.

When running cement or calcined plaster under a machine, poke with a wire into the remote places—the little pockets, so to speak—to make sure that the corners and holes are all filled with the cement or plaster. Sometimes the pockets become "air-bound" and the material will not flow into them until a little poking starts the stuff to flowing. Brimstone seems to flow into the corners better and easier than cement, but it is well, even with that substance, to see to it that the inner portions and the corners farthest from the pouring point are well filled.

ALINING SHAFTING WITH A PLUMB-BOB.

Several methods of alining have been discussed in the preceding chapters and each method has its value for particular cases and conditions. There is another method which the author uses a good deal when setting rough machinery and when the transit is conspicuous by its absence. This method, for the want of a better name, may be called the "single plumb-bob" method and the manner of working it may be better understood by reference to Fig. 111.

A line is stretched from batters or targets *a* and *b,* and a plumb-bob is suspended from the line at some convenient point—it matters little where, or at which end of the line, which may be several inches or a number of feet from the line which is to be brought parallel with line *a b.* Thus line *a b* may be stretched at any convenient distance within reach of the station-rods described in chapter III. The center line of the machine is to be brought parallel with line *f m,* which in turn is parallel with line *a h b,* as will be shown later. The station-rods *f* and *g* are placed at right angles with line *f m,* with one end of each rod even with the center line of the machine to be alined or squared up.

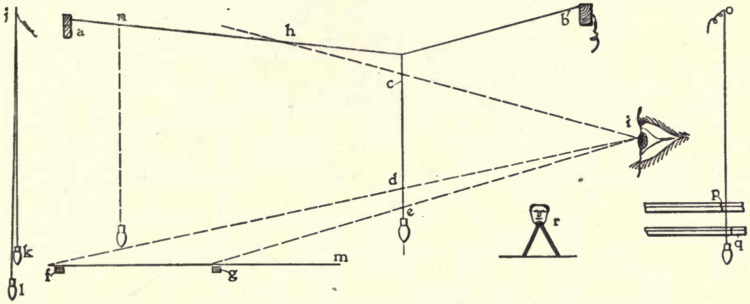

FIG. 111.—ALINING SHAFTING WITH A PLUMB-BOB.

Place the body in such a position directly in line with points *a* and *b,* though some distance beyond either one of these points, that the eye can be brought to a position something as shown at *i,* so that the line of sight *i h* brings line *c d* to perfectly cover and hide the portion of line *a b* which lies between *c a.* Thus that part of the line at *h n* is entirely hidden by a portion of the plumb-line between *c* and *d.* Any variation of the eye, even the one-hundredth of an inch will bring a portion of line *a b* into view, indicating at once to the observer that he has changed his position so that his eye is no longer vertically beneath line *a b.*

If possible, the body should be placed against a wall or a post when in position at *i,* but a man with steady nerves can stand still enough to sight the lines within one-hundredth of an inch. Should it be necessary to work with great exactness, using very fine lines, and there is no post or wall handy, secure a nail keg to sit upon, procure two strips of wood from 3 feet 6 inches to 4 feet 6 inches long, drive a nail through both pieces close to one end (so as to make a pair of compasses of them), then spread the lower ends of the strips a couple of feet apart, and stand them on the ground in front of the person as you sit on the keg, underneath line *a b*. Place the upper teeth on the nailed-together ends of the sticks, as shown at *r*. Juggle the ends of the sticks on the ground until the eye brings the two lines into one, as described, and then you are in position to do some fine sighting with the naked eye, which can scarcely be excelled by the transit.

With the body in position as described above, the two lines will appear to be one, as at *o*, and the two station-rods will appear as shown at *p* and *q*, the marks being the distance the new machine center is to be located from the line *a b*. All that is now necessary is to move the new machine until the marks *p* and *q* are hidden by bob-line *o*, and when that happens the new machine is in alinement with line *a b*. To the man who has never worked with an arrangement of this kind, it appears as if the whole process could be much simplified by hanging a second plumb-bob at *n*. The millwright has only to try this just once to find how misleading the idea is. Two plumb-bobs suspended from the same stretched line are about the hardest things to bring to rest—and to keep there—that can well be imagined.

Try as you will with two plumb-bobs hung from the same horizontal line, and the usual condition of things is as shown at *k l*, where both bobs are hung from line *j*. Try to still one of these bobs and you start the other to swinging, and two men *might*, in an hour or two, get both bobs stilled, but that they would stay so is another thing. Try it and see what great influence even the air movement caused by walking past one of the bobs has on the whole combination. Use a single bob, as at *o*, and even when there is a slight breeze, and the bob is doing the pendulum act, the observer can, with considerable exactness, average the swing of the bob and make his observations very closely.

If there is very much wind, all stretched line and plumb-bob operations should be suspended until the air is still. True, a close approximation of a plumb-line can be obtained, even when quite a wind is blowing, by letting the bob hang in a bucket of water.

This, however, will act as a sort of dash pot and prevent swaying of the bob and the line, but it will not cause the bob-line to hang vertical—it will be forced out of plumb by the wind pressure. The line *a b* will also be deflected at the point of suspension *c* by wind pressure on the bob-line, also by the wind pressure on line *a b* itself. Thus, do the line work on a still day or it will not be correct, and the alinement of the shafting and machines will be anything but accurate. This is one of the reasons why transit alinement of machinery is desirable—there is not the chance of error from long swinging chalk lines. Even when very fine wire is used, the error by air deflection may be considerable, even in a building which seemingly is well closed in. This is especially true when the lines are necessarily long.

Belt Shifters and Shifting.

Shifting belts are not as numerous as they were a few years ago. Before the day of the shifting belt, the tightener or binder was the almost universal method of stopping a machine or a shaft—and it must be confessed that under certain conditions the belt tightener is still a very desirable appliance. And it must further be confessed, or at least acknowledged, that the shifting belt, while very desirable in itself, carries with it that which "queers" the whole business—the much reviled and ever despised loose pulley.

The rim-friction clutch is the solution of the shaft and machine stopping and starting business, and to a great extent it has taken the place of both belt tighteners and shifting belts as well as with sliding gears and cut-off couplings. But shifting belts are still much in use and will continue to be used until the last machinery owner has become convinced that the loose pulley and the shifting belt are costly appliances for him in the end, though their first cost is less than that of the good friction clutch. A poor friction clutch is dear at any price, therefore shifting belts continue to be used and the millwright must continue to make belt shifters to wear out the belts.

The good belt shifter will not touch the belt except during the act of actually shifting the belt from one pulley to the other. When the belt is on the tight pulley, as well as when on the loose pulley, the shifter must not touch the belt in any manner whatever. Never place a belt shifter which must be held in place with a pin or a brace in order to prevent the belt from running over upon the other pulley. The belt shifter should never be made to do duty as a belt guide in order to keep the belt fair on pulleys which have been mounted on shafting out of alinement.

Thus the proper arrangement of the belt shifter begins with the erection of the shafting and the placing of the pulleys. When a belt will run fair upon either tight or loose pulley when once placed there, then the belt shifter may be arranged, but unless a belt will actually run fair on either pulley, then *never* apply the belt shifter until the tracking of the belt has been corrected. Then a lever arrangement may be applied for forcing the belt up the crown of either pulley, but there the shipper should cease to act. The belt after having been forced off the crown of one pulley should run upon the crown of the other pulley without having to be forced, or even helped along by the belt shifter.

The Ordinary Belt Shifter.

Nine times out of ten the average millwright will cut holes in a couple of pieces of board, slip a bit of 2x4-inch scantling through the holes and nail the boards in position to hold the scantling under the leading fold of the belt close to one of the pulleys.

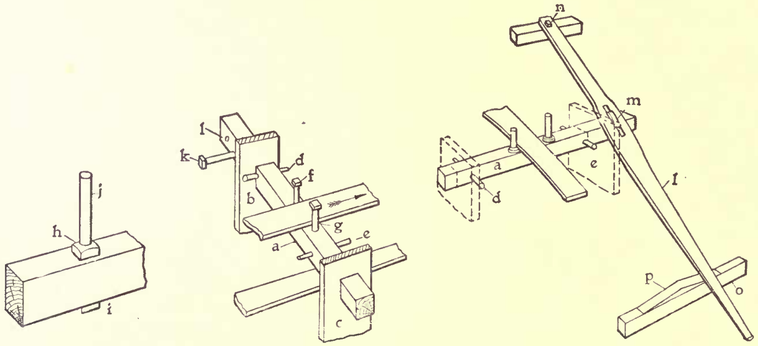

FIG. 112.—THE ORDINARY BELT SHIFTER.

Fig. 112 shows the arrangement as usually put up, the 2x4-inch bar *a* being supported in the guides *b* and *c*. The pins *d* and *e* prevent too much movement to the shifter-bar, while the lag-screws *f* and *g* force the belt along when the bar is moved endwise.

Thus far the arrangement is fair, though it would be better to put in rods, with a nut above and another nut below the bar as shown at *h* and *i*, the rods being filed or ground smooth and not less than ¾ inch in diameter to prevent cutting of the belt.

It will be noted that the lag-screws *f* and *g* are quite close to the edges of the belt. This is wrong. There should be more than an inch more width between guides *f* and *g* than the width of the belt for all belts narrower than four inches, and an increased amount of clearance between belt and guides for all wider belts. The great error into which the millwright falls in erecting a belt shifter lies in the pin *k* and the extra pin-hole *k,* into which pin *k* is placed after the belt has been shifted, the hole then coming on the front side of board *b.*

These pin-holes and the pin *k* do the business of holding the shifter tight against the belt all the time, the pin *k* being shifted as required from one hole to the other. The lag-screws *f* and *g* either one or the other, are always bearing against the edges of the belt which is worn badly in a very short time. The pin business *k* is undesirable at all times for the reason that it forces a man to go to the shifter-bar every time the belt is to be moved from one pulley to the other. It is much better to omit the pin *k* and to put on a shipper handle long enough to reach to the point where it is most desirable to operate the belt shifter.

A shipper handle is represented at *l,* Fig. 112, arranged in the manner indicated above. The handle is made of 2x6-inch stuff, spruce or Georgia pine as the lumber happens to be at hand. The lower end of the handle is tapered to about 2 inches in diameter, full width being left at *m,* tapered again to about 4 inches at *n,* where it is bolted to some solid point of support, a 4-inch carriage bolt being put through the end of the handle to prevent splitting. A slot is made in the handle at *m,* and a bolt or a lag-screw is used at that point for attaching the handle to the shipper-bar, which is placed midway of its travel, with the belt halfway on each pulley; then the handle is placed at right angles to the shipper-bar, and while in that position, the hole for *m* is marked on the shipper-bar. This method of arrangement provides that the lever has the same angularity at each end of its throw. A support *o* is then placed under the lower end of the handle, and a double wedge shaped piece *p* is adjusted in a position central to the throw of the handle *l,* and then fastened permanently to support *o.* This is all that is needed with a properly arranged belt and pulleys. By the time the handle has been moved to the point *k,* the belt has been forced off the crown of one pulley and is ready to climb the other pulley. The wedge *p* prevents the jarring of the machinery from working the belt shifter, and the tendency of the handle to move down the wedge *p* is all that is needed to keep shipper-pins *d* and *e* against their respective guides.

Rope and Rod Shifters.

In some instances, it is not well to cumber floor or ceiling with a cage of scantlings similar to that shown by Fig. 112. In such cases, the rod shifter may sometimes be used to advantage.

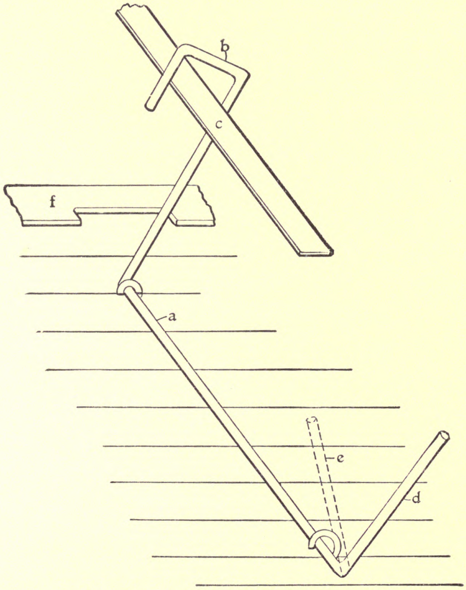

FIG. 113.—ROD BELT SHIFTER.

This is particularly the case with machines driven from a countershaft on or under the floor. The device consists merely of a rod of ⅞ or 1-inch round iron bent to the shape shown at *a,* one end of the bar forming the shifter-pins or yoke *b,* the other end being bent up to serve as a handle for operating the device. To shift the belt it is only necessary to throw the handle *d* to the position indicated by the dotted lines at *e*. This forces the belt from one pulley to the other, and the weight of handle *d* and shifter-yoke *b* holds the rod on whichever side of the vertical center it may chance to be. The double stop *f* prevents undue motion of the shifter in one direction or the other. Taken as a whole, the device is a very cheap and efficient one, easily made and adjusted. It is held in place by two staples, as shown, which are driven into holes bored in the floor.

Distant Control Belt Shifters.

It often happens that distant control is required of a belt shifter, as in the case of a conveyor. Belt conveyors 200 to 300 feet long should be provided with means for stopping and starting at either end of the belt, and when a head-driven conveyor is 300 feet long it becomes quite a problem to stop and start the mechanism from either end, or from any point along the length of the conveyor. When the machine is motor-driven, the problem is a simple one, and switches may be cut in at as many points along the length of the conveyor as desired, the wires being carried from one end to the other to reach the switches.

With a belt-driven machine, the author prefers to operate the belt shifter by means of ropes or wire cables which pass along the entire length of the conveyor. In the case of elevators where trouble was anticipated on account of the nature of the material to be handled, ropes from the belt shifter at the top of the elevator were carried to several points along the elevator so as to reach the machine which discharged into the elevator; the discharge of the elevator; and a point in its hight where a cleaning door was located. In the case of water-driven factories, the rope shifter has been made to take the place of a safety stop by its being attached to the water wheel gate and thence carried to every room in the mill, thus placing the stopping and starting of the machinery under the control of every authorized man in the mill.

Rope Controlled Belt Shifter.

The rod shifter illustrated by Fig. 113 lends itself very readily to rope control, as obviously it is only necessary to form an eye in the end of handle *d*, attach ropes leading in opposite directions, and the belt can be shifted as far away as the ropes will reach. By passing the ropes over sheaves, and applying a weighted tension pulley at the farthest point reached by the ropes, the problem of distant belt control has been solved.

Fig. 114 shows several ways of arranging a rope control which the millwright can vary to suit circumstances. The ordinary wooden shipper-bar *a* is fitted with a pair of sheaves, 5 or 6 inches

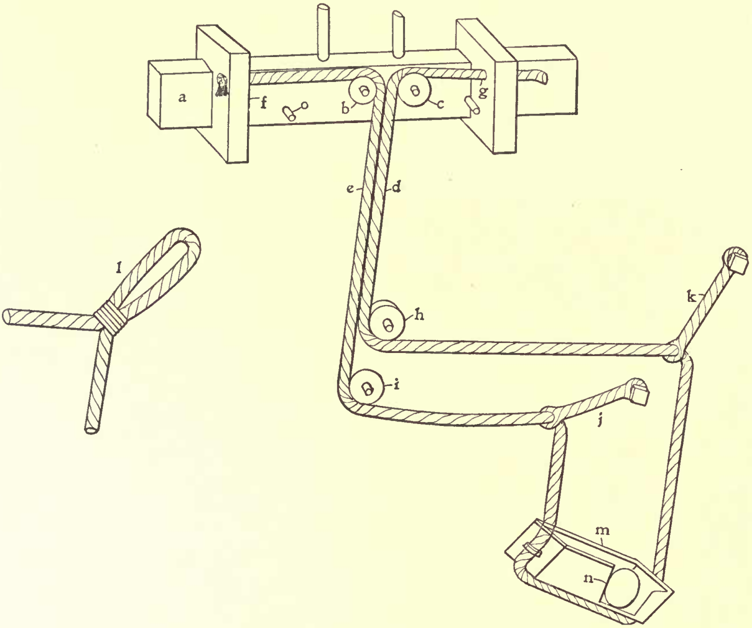

FIG. 114.—ROPE CONTROLLED BELT SHIFTER.

in diameter, placed so close together that the ropes cannot get out of the grooves. The ropes are put through holes bored in the guides, and a knot tied in each rope-end settles their fastening. From an inspection of the apparatus it will readily be seen that upon pulling downward upon rope *e* the shifter-bar will be forced to the left, and contrariwise upon pulling rope *d* the pulleys moving with the shipper-bar and the ropes traveling sidewise a distance equal to the travel of the bar.

So far the matter is very simple. To carry the ropes to the places from which it is desired to operate the belt shifter, sheaves are placed as shown at *h* and *i,* and the ropes led in the desired direction. As many sheaves may be used as is found necessary, but if sheaves are not to be had, the millwright can get along without them by simply hanging up the rope angles as shown at *j* and *k* by means of short ropes attached to the bends and looped over lag-screws let into properly located timbers. This forms a tension ball-crank, and it will carry the rope motion around almost any angle if properly proportioned and erected. It is not as convenient as the sheave, but it enables a man to "get there" in spite of difficulties, the lack of proper apparatus, etc. A very convenient way of arranging a sheave substitute is shown at *l,* where a portion of a loop in the rope is served with stout cord or wire, and the loop hung over the lag-screw or pin.

It is desirable that the ropes terminate in vertical lengths in order that proper tension may be applied to hold everything tight at all times. To this end, it is a very convenient way to weight both ends of the rope with a box, as shown at *m,* the box being clamped to the ropes at either end as shown, and being placed in a level position when the shipper-bar is in mid-stroke. Inside the box *m,* it is desirable to place a heavy ball. An old cannon ball 5 inches in diameter makes an excellent weight for a 6-inch belt, while for a 10-inch belt a 7- or 8-inch cast-iron ball is heavy enough to do the shifting and to keep the rigging tight at all times.

The action of this arrangement is very simple. To shift the belt, it is only necessary to take hold of box *m* and raise the right hand end far enough that the ball rolls to the left end of that box. The moment the box passes beyond a level position, the ball rolls to the left end, drags the rope down, and pulls shipper-bar along until pin *o* engages guide *f,* and the belt has been shipped to the other pulley. The weight of the ball *n* holds the shifter-bar at all times against the shake of the machinery. If it is not possible to obtain a cast-iron ball for the tension box, dry sand may be used instead. Sand will do the work, but it is not as convenient and requires a larger box.

CHAPTER XV.

BABBITTING, SCRAPING AND LUBRICATING.

It is the present practise, almost universally, to line journal bearings with some form of soft metal, usually one which can be replaced by casting a new lining of fusible alloy without removing the journal from its place. For heavy work, the brass and bronze bearing will be employed, but for all ordinary journal bearings, "babbitt" metal continues to be used. Even high-grade engines have their crank-pin bearings lined with babbitt which is cast inside the brass bearing usually found in that part of an engine. Babbitt has been substituted for brass for the reason that when the wrist-pin becomes hot enough to melt out the babbitt, the engineer is very quickly made aware of the trouble, and is forced to shut down the engine at once. Whereas with the brass crank-pin bearing, running the engine may be continued with a red-hot crank-pin bearing until the pin becomes permanently sprung or otherwise out of shape. Thus the babbitt wrist-pin bearing is a safety device to protect the engine against possible neglect.

"BABBITT" AND "BEST BABBITT."

So-called "babbitt metal," like lubricating oil, is a pretty hard proposition where a selection must be made, as there are about as many alloys passing under the name of babbitt as there are makers of that alloy. John Babbitt, the inventor of the recessed box, lined it with a fusible alloy, the exact composition of which has been lost, but it was probably composed entirely of copper and tin, in the proportion of tin 9 parts, copper 1 part. Since, however, antimony has been added, and by some makers the copper has been replaced by zinc. The following table gives the results obtained by analyizing many bearing metals at the Pennsylvania Railroad laboratory at Altoona, Penn. It was found that of all the bronzes tested that containing copper 77, tin 8, and lead 15 parts wore more slowly than any other "bronze" alloy, and this

BEARING-METAL ALLOYS.

Trade Name of Alloy.	Copper.	Tin.	Lead.	Zinc.	Antimo'y	Iron.
Camelia metal	70.20	4.22	14.75	10.20		0.55
Anti-friction metal	1.60	98.13				trace
White metal			87.92		12.08	
Car-brass lining		trace	84.87		15.10	
Salgee anti-friction	4.01	9.91	1.15	85.57		
[1] Graphite bearing-metal		14.38	67.73		16.73	
Antimonial lead			80.69		18.83	
[2] Carbon bronze	75.47	9.72	14.57			
[3] Cornish bronze	77.83	9.60	12.40			
Delta metal	92.39	2.37	5.10			0.07
[4] Magnolia metal			83.55	trace	16.45	trace
American Anti-friction metal			77.44	0.98	19.60	0.65
Tobin bronze	59.00	2.16	0.31	38.40		0.11
Graney bronze	75.80	9.20	15.06			
Damascas bronze	76.41	10.60	12.52			
[5] Manganese bronze	90.52	9.58				
[6] Ajax metal	81.24	10.98	7.27			
Anti-friction metal			88.32		11.93	
Harrington bronze	55.73	0.97		42.76		0.68
Car-box metal			84.33	trace	6.03	
[7] Phosphor bronze	79.17	10.22	10.61			
[8] P.R.R. "B" metal	76.80	8.	15.00			
[9] Babbitt metal (parts)	1.	50.			5.	
Babbitt metal light	1.8	89.3			8.9	
Babbitt metal best	3.7	88.9			7.4	
[10] Babbitt (parts) metal best	4.	96			8.	
Another "babbitt"	1.5	45.5	40.00		16.	
Brittania	1.	85.7		2.9		
Brittania		81.9		1.9	16.2	
Brittania	2.	81.		1.	16.	
Brittania	4.	70.5			25.5	
Brittania	10.	22.		6.	62.	
[11] Plate pewter	1.8	89.3			7.1	
White metal bearings on German locomotives	5.	85.			10.	
French white metal h'd	10.		65.		25.	
French white medium	5.5	83.3			11.2	
French white soft		10.	70.		20.	
French white very soft		12.	80.		8.	
English:—"Parsons"	2.	86.	2.	27.	1.	
English:—"Richards"	4.5	70.	10.5		15.	
English:—"Babbitt"	3.5	55.	23.5		18.	
English:—"Fenton's"	5.	16.		79.		
English:—"French Navy"	7.	7.5	7.	87.5		
English:—"German Navy"	7.5	85.			7.5	
Type metal, soft, to			83.		17.	
Type metal, hard			80.		20.	
Ornamental castings			66.66		33.33	
[12] Pattern metal		10.	10.		2.	

---

[1] Contains no Graphite. [2] Contains a possible trace of carbon. [3] Trace of zinc, Iron and Phosphorus. [4] Dr. H. C. Torrey says this analysis is erroneous and that Magnolia metal always contains tin. [5] Contains no Manganese. [6] Phosphorus or Arsenic 0.37. [7] Phosphorous 0.94. [8] Phosphorous 0.20. [9] (In parts by weight). [10] (In parts by weight). [11] Bismuth 1.8. [12] Bismuth 6; Brass 8.

mixture, known as "alloy B," is the standard bronze bearing metal for this railroad.

It should be noted that the difference between "bronzes" and "babbitts" lies chiefly in the reversal of the quantities of copper and tin contained in the alloy, the "bronze" containing about 90 per cent. of copper and 10 per cent. of tin, while the "babbitts" contain 90 per cent. of tin and 10 per cent. of copper. Thus the babbitt metal is merely an inverted bronze.

From the above tabulated alloys, the millwright may select the one which seems best fitted for the work in hand. In case that it is necessary to make up a babbitt containing copper—that is, to melt the ingredients as stated in the table—care must be taken to heat hot enough to fuse the copper, and then immediately lower the temperature as soon as the copper is melted, in order that the tin and antimony may not be oxidized.

MAKING BEARING-ALLOYS.

Melt the copper first, then add the antimony and tin, with the melting pot removed from the fire that the addition of the antimony and tin may reduce the temperature of the molten copper. A method used by some manufacturers, as described by Joshua Rose, is as follows:

Melt 12 parts of copper, then add 36 parts of tin. Then add 24 parts of antimony and 36 parts more of tin, the temperature being lowered as soon as the copper is melted in order not to oxidize the tin and antimony, the surface of the bath being protected (with dirt, sand or a little powdered charcoal) from contact with the air. The alloy thus made is subsequently remelted in the proportion of 50 pounds of the alloy to 100 tin.

Should it be desired to ascertain just how the percentages exist when the above method is followed, it may be stated as follows:

Copper	12	parts,
Tin	36	"
Antimony	24	"
Tin	36	"
Total,	108	"
Remelting, with twice tin	216	"
Grand total,	324	"

Then there will be, copper 12 parts, tin 288 parts, and antimony 24 parts. The percentages will be:

$$12 \div 324 = 3.7 \text{ per cent.}$$
$$288 \div 324 = 88.9 \text{ `` ``}$$
$$24 \div 324 = 7.4 \text{ `` ``}$$

This agrees closely with the tabulated percentages given for "best babbitt" in the preceding table.

Preparing Bearings for Babbitting.

It is very important when journal bearings are to be lined with soft metal—especially when doing repair work—to make sure that the castings are clean and dry. Water is the worst enemy of the babbitting mechanic. A drop of water flashing into steam increases its volume about 1646 times, and if there happens to be babbitt metal in the space the steam desires to occupy it comes out of the bearing hot-foot and lodges upon the first surface encountered, no matter whether it be metal or flesh. Therefore, take care that there is no water in cavities to be filled with or reached by melted lining metal.

Bearings can be poured smoother and with less danger of ribs and ridges when the metal is hot. When the metal surfaces are heated to a degree of temperature just below the melting point of the soft metal, then ideal conditions have been reached and the best possible box can be poured. Oil in a bearing does no harm. It will not flash into steam like water, and in some cases, pouring oil into a damp bearing makes it possible to pour the bearing without any trouble from the water in it.

But it is dangerous to attempt to pour when there may be water present, even though oil be used, for sometimes when there is very much water present the oil remedy is not powerful enough, and severe burns upon hands and face may attest the throwing power of water when suddenly flashed into steam by contact with hot lining metal.

It is the only safe way, to clean out all the dirt which may be contained in the cavities of the casting. Blow-holes are the worst to contend with, for no one can tell how deep they are or how much moisture is contained in them and hidden from sight. All castings which can readily be carried should be placed over a stove or the forge fire until it is certain that all water has been driven off. On field work, the writer has on more occasions than one built a fire right on top of the box casting and fed the blaze with shavings and kindling wood until sure that all moisture had been dried off.

Drying Bearings With Gasoline.

A still better way is to pour some gasoline into the casting and set the fluid on fire. It makes a hotter fire than wood and finds every hole and crack in the casting, and besides acting as fuel to heat the bearing, the oily nature of the gasoline helps to displace the water in the manner described for oil, though in a lesser degree. Use plenty of gasoline and make sure that it is so confined that it cannot run into something which will burn. Gasoline will run away like a streak of lightning and it will carry flame with it, therefore make sure that you are not going to set something on fire when you use gasoline as described.

Another danger: sometimes the supply of gasolene becomes exhausted before the casting has been sufficiently heated, and more gasolene must be added. Here is where danger comes in unless proper precautions are taken. Then the whole operation of adding gasolene to a flame becomes as harmless as pouring ice-water into a snow-bank. To begin with, never pour gasolene into flame from a can, for the gas which forms above the fluid in the can is sometimes as explosive as gunpowder, and when it ignites it scatters the burning gasolene in all directions.

Gasolene will burn in a very harmless manner when properly handled; so when it is necessary to replenish the burning fluid in a journal-box casting, just pour some of the gasolene in a tin or in a cold and empty babbitt ladle, ignite the fluid in the ladle and then pour it into the burning gasolene in the bearing. A ladle makes a splendid tool for handling ignited gasolene, and there is not the least danger in handling that lively fluid if it be done as above described.

Covering Mandrels With Paper.

While the journal bearing is being dried out, get things all ready so that the bearing may be poured as soon as the gasolene flame dies out. The mandrel upon which the babbitting is to be done was of course provided before the gasolene stunt was commenced. Bearings may be cast direct upon the shaft which is to run in them, but it is better to have a mandrel for that purpose. If the journal must be used, place a sheet of strong, smooth paper around the journal so the babbitt does not come in direct contact with the metal. This is also excellent practise in all cases where mandrels are used for babbitting single boxes. Where many are poured in succession, the mandrel becomes heated and does not chill the hot babbitt, hence the paper becomes unnecessary.

When poured directly upon the journal, babbitt pinches the shaft along the line of division between box and cap, and scraping is necessary to make the journal fit the box after the lining has been poured. The thickness of paper around the journal, combined with the shrink of the soft metal, relieves the journal so that on rough work little or no scraping will be found necessary, the arrangement of the liners giving all the adjustment necessary. On fine work, however, scraping will be necessary. In fact, all fast running and close-fitting bearings should be scraped to fit the journal which is to run in it.

PEENING SOFT LININGS.

Sometimes the soft lining is peened to make it tight in the casting. When babbitt or other lining metal is poured into a cold casting, the lining becomes chilled before the iron casting becomes heated; therefore when the soft lining finally cools it shrinks away from the casting and becomes a loose, rattling nuisance which must be peened to make tight in the journal bearing casting. Heating the box before pouring in the soft metal lining is a cure for looseness, as the iron casting then shrinks with the soft metal lining on cooling and holds it fast when cold.

There is another way of fastening a lining tightly into a cold casting and that is by using one of the antimony alloys as a lining. Antimony, when alloyed with lead and with some other soft metals, loses the power of shrinking during the freezing process, and like water expands and fills the casting so tightly that there is no rattle or looseness. Therefore, when forced to line a cold bearing, use an antimony alloy. It is for this purpose that the antimony alloy is used for casting printing type. The expansion of the alloy during the instant of solidifying or freezing causes the metal to expand into every corner of the mold, thereby securing the extreme sharpness necessary in printing type. The same is true with the antimony alloy in the journal bearing.

Putty or Clay Dams.

To make the bearing ready for pouring, secure the mandrel in position and make tight around the ends and sides of the journal, either with putty or with moistened clay. The author prefers glazier's putty made of whiting and linseed oil. When putty cannot be obtained, go to the nearest clay bank and procure a supply of that material which should be worked between the hands until free from lumps, and plastic. It is very seldom that clay will cause the soft metal to snap or sputter, but there is always some danger of such an occurrence. A fragment of the moist clay might work through and fall into the bottom of a cavity in the bearing. The molten metal would float such a fragment and eventually land it at the top of the bearing; still, if it should happen to be cornered in a pocket and the water contained in the clay should be suddenly driven off, there would be an explosion similar to that when the hot metal encountered water in a damp bearing casting. If glazier's putty be used for stopping openings, there can be no danger whatever.

In making tight around the ends of a box, particularly where there is considerable space between the casting and the mandrel, ake care not to press the putty into the lining space. Should there be 1/4 inch or more space, some wooden heads should be cut out to fit the mandrel and clamped against the box casting. If it is a repair job and there is neither time nor opportunity to fit heads, then rub some putty into small cord, say 1/8 or 1/4 inch thick, and wind around the mandrel, close against the ends of the box. The cord will serve as heads and some more putty daubed on the coils will make everything tight.

Forming Oil-Channels.

Oil-channels may be formed in the lining by winding a small cord around the mandrel. The cord should be of the hard spun variety and preferably should be rubbed smooth with putty before being wound upon the mandrel. Take care that the cord is wound on in the direction the shaft is to run. It does not work well when a passage must carry oil against the rotation of a shaft.

When cap and box are to be poured together, cut two notches in each liner, one notch at each end, then clamp the cap in place, taking care that the liners are fair against the shaft before tightening down on the cap-bolts.

If there are holes in the cap for pouring in the lining, besides the oil-hole, then proceed to fit a white pine plug in the latter hole, fitting the plug tightly against the mandrel and let it project through the hole in the cap. After pouring, the cap may be easily removed by driving a cold-chisel between cap and box, breaking off the metal which connects the cap and box linings through the four notches mentioned. These notches should not be more than ¼ inch on a side, and the section of soft metal lining being small is easily broken by driving in the cold-chisel. The four bits of ruptured metal should be carefully chipped or filed off smooth with the surfaces from which they project. Next drive out the plug in the oil-hole and the cap is ready for scraping to fit the shaft.

Heating Babbitt Metal.

Before pouring a bearing, it is very important that the babbitt metal be heated to the proper temperature. This may be roughly determined by inserting a bit of wood—white pine is the best, but whitewood or a similar soft wood will do—into the hot babbitt and noting the effect upon the wood. It is best to whittle the stick to a smooth flat surface similar to the little paddle used for stirring paint or hot glue. The surface of the molten metal should be kept covered with a layer of charcoal or forge dust to prevent oxidization of the alloy. If no charcoal is at hand use floor dust or plain dirt. Thrust the whittled stick through the layer of dust on top of the hot metal, and note results to the stick. If the metal is too hot, it can be felt to be boiling around the stick which will be charred more or less, or not affected at all, according to the temperature of the molten metal.

When a fierce "boiling" is felt, the stick trembling in the fingers, and smoke rises from the submerged end of the stick, then it is certain that the metal is too hot. When there is scarcely any trembling to be felt in the stick while it is immersed in the hot babbitt, then the alloy is probably about ready to pour. Withdraw the stick and note its condition. Should that portion which went into the babbitt be charred badly, the metal is too hot. If the stick is not colored at all, and metal almost adheres to the stick, then the metal is not hot enough and it will not flow properly if poured at that temperature.

When babbitt metal is at the right temperature, the stick will be faintly charred after being immersed three or four seconds in the molten metal. Two or three tests will blacken the stick even when the metal is not quite hot enough, therefore it is best to whittle a new surface on the test-stick after each immersion. Take a shaving off of one side of the stick—that is enough; there is no need of whittling all four sides of it—and keep the stick moving sidewise when in the hot metal. Do not let it lie in one place but move the stick around to stir the babbitt and to bring the stick in contact with hot metal.

Pouring Soft Metal Bearings.

It is not good to heat soft metal too hot. True, it can be allowed to cool to the proper stick-charring temperature, but excessive heating is apt to cause a loss of some of the metals composing the alloy, through oxidization. Zinc is easily driven out of an alloy by too high temperature when melting. Lead soon turns into oxide—dross—upon exposure to the oxygen of the air when melted, and the higher the temperature of the melted metal, the faster it will be rusted out by exposure to the air. It is for the purpose of preventing this loss of some of the metals that the surface of the molten alloy is kept covered with charcoal or dust, to prevent access of air to the surface. But when the alloy is overheated, then oxidization proceeds much more rapidly and much metal is lost in a very short time.

When ready to pour, never follow the practise of skimming the surface of the metal until it is clean of all dirt or dross. Instead of skimming the surface, allow the covering to remain until the ladle is in position to pour. Then let another workman place a stick or a poker in the lip of the ladle, so that as the ladle is tipped up to pour, the covering is held back and the clean metal flows out from under the coating. When pouring must be done by one man, and it is necessary to support the ladle with both hands, then a small nut or some other convenient shape of iron may be laid upon the covering close up to the pouring lip of the ladle.

When the ladle is tipped up, the bit of iron forms a floating dam which effectually prevents the covering of dirt from flowing out of the ladle, while the molten metal has free passage under the bit of iron. Sometimes it is necessary, when the floating dam is used, to pour off a bit of the metal before pouring into the journal. This is for the purpose of washing away any pieces of dirt which may come along with the metal before the floating dam gets fully down to work.

When two ladles are used, and this is usually necessary, each man should pour a bit of metal into the other fellow's ladle in order to clear away any loose bits of dirt, as above noted. When babbitt metal is melted in a pot, the alloy may be dipped out with ladles as required for pouring, and before dipping the ladle into the pot, push the covering to one side with the ladle, then pass the ladle below the surface of the alloy, taking care that the ladle is entirely submerged. Then lift the ladle out quickly and an excess of metal will be forced up by and above the ladle. As this excess of metal flows away, it forces back the dirt or charcoal covering on top of the alloy, and the ladleful of metal comes out of the pot clean and shining with not a sign of dirt visible.

The metal must be poured very quickly when thus dipped up clean, for the reason that oxidization is going on all the time, from the instant that oxygen comes in contact with molten metal until the metal has become cold again. Therefore, hasten the pouring operation once the metal is heated and exposed to the air ready for pouring. And when you do pour, see that the metal runs into the bearing in a clean, steady stream as large as the opening will allow. Never falter or hesitate during the pouring operation. If the stream be stopped, even for a second, a line across the surface of the bearing will indicate the hight of the metal in the bearing when pouring was stopped and started again.

Usually, one side of a bearing is poured into and the metal rises along the other side of the shaft until the cavity is full. In pouring a bearing of this character, move the ladle from one end of the bearing to the other, causing the stream to traverse along the slot, thereby keeping the babbitt at approximately the same temperature in all parts of the bearing. When two ladles are used to pour from, it will be sufficient to pour into diagonally opposite corners of the bearing, and if both streams be poured quickly, the cavity will be filled before the metal becomes too cold to flow to the corners.

Pouring Thin Solid Boxes.

It was stated above that the temperature of the alloy when poured should be just high enough to slightly char a soft-wood stick. This is a general rule, and by following it the millwright will not go far astray on ordinary work. But there are exceptions: when thin solid boxes must be poured, and there is a long narrow or thin space to be filled with soft metal, then it is sometimes necessary to pour the metal hotter than described. In extreme cases, the author has been obliged to pour babbitt metal at nearly a red heat, but such cases are exceptional and can only be regarded as faulty pieces of work on the part of the machine designer to be gotten along with as best one may. In such cases, the metals to come in contact with the soft metal should always be heated as much as possible before pouring in the lining.

When a ladleful of metal fails to fill a box, and another ladleful is not at hand, do not try to fill the box by pouring hot metal on top of the cold, for it is very seldom that such a course results in a satisfactory bearing. Hot babbitt will not unite with or weld itself to cold babbitt by simply pouring one on top of the other; therefore, should a man fail to fill a bearing when pouring in the lining, it is decidedly the best practise to take down and chip out the partially filled bearing, set it up again, and pour from a supply sufficient to fill the bearing. An "instalment-filled" bearing may do good service for a long time, but the chances are that it will come to pieces inside of three months, even if it does not fail within three days after being put to work.

Scraping Bearings.

To make a first-class job of babbitting, there is no escape from the scraping operation. Even for rough work, should it be possible to make a good bearing without scraping, a better one can be made if the operation of fitting the bearing to the journal be carefully followed out. It used to be necessary to run machines for a time, more or less lengthy, in order to let that machine "find its bearings," so that it would not heat or work the bolts loose which held the caps in place. All this preliminary running and "finding its bearings" is needless when the journals are properly fitted to their bearings. When a shaft hits a bearing only in two spots, at opposite sides and ends of a bearing, it cannot be expected that the shaft will run cool and steady in that bearing.

When a shaft is made up in a bearing, and given a turn or two, and you find black spots in two or three parts of the soft metal lining with no marking elsewhere, then it is sure evidence that the shaft touches the bearing only at those two or three spots. The remedy is to remove the metal at those points until the shaft touches at four or five places instead of at two or three. Next, remove the four or five and secure a bearing at eight or ten places. Continue this work until the shaft has a bearing in many spots. By carrying the spot removing to a great length, innumerable points of bearing could be obtained between the shaft and the soft metal lining, and it could be assumed that they touched each other at all points and that the contact between them was practically perfect.

When fitting a bearing to a shaft as above, the high blackened spots are commonly removed by scraping, hence the name of the operation becomes that of "scraping a bearing." The millwright may do a very good job of fitting, as above described, by the use of a common chisel—a carpenter's chisel, commonly known as a "firmer" chisel. With this tool the high and colored spots may be removed, and a little plumbago or red lead mixed with oil and rubbed upon the shaft just before it is each time tried into the bearing will leave new spots for the millwright to scrape off and the operation may be continued indefinitely, or until a bearing is obtained which fits the shaft with the requisite nicety.

Tools for Scraping Bearings.

The carpenter's chisel, while it may be made to do a good job of scraping, is not the best tool for that purpose, and the millwright should add to his kit of tools two or three good scrapers for this purpose. Fig. 115 represents a form of tool commonly used for scraping journal bearings. This tool may be forged from any convenient bit of tool-steel, or, as in case with the tool illustrated, it may be made from a worn-out half-round file. The length of the file should be somewhat longer than that of the bearing to be scraped in order that the tool may be held easily by the hands, one end of the tool projecting past one end of the box while in use.

To scrape a box, grasp the tool with the thumb and fingers of each hand, bring the sharp edge flat against the box lining and shave off the projecting lumps and high spots. For small bearings, the scraper may be used with the round side against the soft metal lining; but when a bearing of large diameter is to be scraped, the flat side of the scraper may be laid against the work.

FIG. 115.—SIDE SCRAPER FOR JOURNAL BEARINGS.

For rapid work, the tool shown by Fig. 116 may be used to advantage. This tool is also made from an old file, but in this case the end of the file, not its side, is made to do the work.

This tool is also a home-made affair, and almost any old flat file may be utilized for making it—something of an advantage when it is considered that the half-round file is seldom found around a plant, while the flat file is to be had for the picking up. But there is quite a knack in making the end scraper so that it will do fast work. There are two things which make this scraper either a good tool or an exceedingly bad one. These things are the angle at which the end of the tool is turned and the level to which the cutting edge is ground. These things the millwright must experiment with and determine them for the work in hand, the metal to be cut and the man who is to do the cutting.

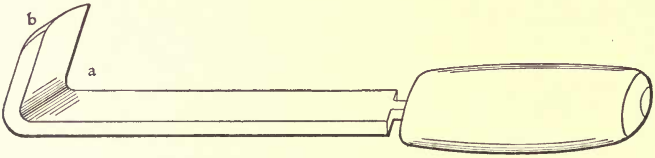

FIG. 116.—END SCRAPER FOR FAST WORK.

The engraving gives approximately the angles which the author has found best fitted for a universal tool of this character, though, as stated, the angles must be varied slightly according to the work to be done. The angle of the bend at *a* is approximately 75 degrees, and the bevel *b* is about 35 degrees with the bent-up portion, or about 40 degrees from the body of the tool. In using this scraper, the handle is usually lifted more or less out of parallel with the line of cut, which is, of course, lengthwise of the bearing; hence the angle of 40 degrees may be reduced as much as is found necessary to keep the tool cutting smoothly. Should there be any indication of chatter, it is evidence that the tool is not held at the proper angle, which should be changed until the scraper cuts smoothly. As merely raising or lowering the hand changes the angle of cut, the change may be made instantly and without the necessity for grinding or honing. Every scraper should be kept "razor sharp" when scraping is to be done, for good work cannot be done easily with dull scrapers. Neither can it be done quickly or profitably to either millwright or employer, unless the scraper is in good condition.

Automatic Lubrication.

While machinery may be operated in good shape by means of periodic lubrication, the oil being supplied from a squirt-can "once or twice in a while," it is conceded by authorities that automatic lubrication absorbs less than one-half the power in journal friction that is used up in driving journals under squirt-can lubrication. This being the case, it is profitable to secure automatic, or rather continuous lubrication at all times for all journal bearings and slides.

When we speak of automatic or continuous lubrication, it is understood that a supply of oil is at all times flowing over and between the running parts of the bearing. The chain or ring bearing is a common form of continuous lubrication, a constant and continuous supply of oil being brought to the bearing and the surplus allowed to flow away again, taking with it the worn out oil and the steel and soft metal particles which were torn from shaft and journal during their travel one over the other.

Chain or Ring Lubrication.

The chain and the ring method of supplying oil to a bearing has one very serious defect which is this: the spent and dirty oil is returned again and again to the bearing, until finally the oil is so loaded with foreign matter that it ceases to lubricate even as well as the squirt-can method where the old oil and worn metal particles are once in a while washed out of the bearing by the flood of new oil occasionally poured in. Thus the self-oiling bearing should have the old oil drained out and new oil put in every few weeks. If this is done, there will be fairly good lubrication at all times.

Some concerns permit their oilers to flood self-oiling bearings, filling them with oil much more frequently than is necessary, and running the oil reservoirs over nearly every time they are filled. This, to a certain extent, washes out the worn out metal and oil, and gives the bearing a new lease of life. But the method is a somewhat costly one, as well as exceedingly dirty.

A Circulating Oil System.

What is needed to secure a perfect system of lubrication is a continuous feed arrangement, either sight or forced, from a central reservoir, the oil being piped to each bearing in such a manner that the flow of oil ceases when the motion stops, and commences automatically again as soon as the machinery begins to move. The principal elements in a system of this kind are found to be oil pipes connecting each bearing with a reservoir of oil, to which flows all the oil from each bearing in the mill, but passing through a good oil filter while on the way from bearing to reservoir.

All the metal particles and other foreign matter is thus removed from the oil which is then raised from the reservoir by means of a small pump, a certain quantity being permitted to pass through sight-feed oil-cups into pipes leading to the several bearings in the mill. The surplus oil which is raised by the pump, and refused by the several sight-feeds, flows back again into the reservoir from which it again and again passes through the pump as described. When the machinery stops, the pump stops also, and lubrication ceases as soon as the small quantity of oil adjacent to the sight-feeds flows back to the reservoir.

The oil being filtered perfectly clean, there is nothing to stop up the sight-feeds and they require very little attention after having once been set for the amount of oil required by each bearing. As the amount thus sent to each bearing is always to be an excess of the quantity required, the sight-feeds are easily adjusted—

and they remain in adjustment for a long time. This system is very easily applied to ring or chain oiling bearings, nothing being necessary except to connect the supply pipe through the usual oil-filling hole, then to tap in an overflow or return pipe by means of which the surplus oil is carried back to the reservoir.

To connect up rigid flat boxes and that style of bearings, it is necessary to pipe the oil into the oil-hole, then add a drip pan under the bearing and connect each drip pan with a return pipe to the oil reservoir to carry back the surplus oil. Fast running bearings must have oil collars attached in order that the oil may not run along the shafts and sneak away past the added drip pans. But as most machines containing fast running shafts are made with the necessary oil collars, the problem in that direction is not a serious one.

Oil Filters and Pumps.

There are numerous oil filters in the market, and the millwright will not find it a paying investment to try to make up one of these appliances, though he may find it profitable to add a steam coil to the filter in order to lighten the oil sufficiency to permit the filter to remove foreign matter to better advantage. Very thick oil is hard to filter. When thinned by heat, it passes the filtering medium much more readily. As regards oil pumps, almost anything will answer which can raise the oil from the reservoir to the sight feeds. The author prefers a small centrifugal pump, as owing to the absence of any valves, and to the submerged or flooded position of the pump, it never fails as long as the belt stays on the pulleys. When direct-driven by a small electric motor, the arrangement is almost an ideal one.

Oils and Oil Testing.

The millwright need not spend much time nowadays testing oils, for the chemists, the college men and the oil manufacturers have done that work for him, and they have done it so well that little remains for the oil user except to tell the oil dealer or agent the conditions under which the oil must do service. With that information in full, the oil man can, and will, select an oil for the consumer which will do all that is required of it. Sometimes it is necessary to make a change in the oil thus selected, but it is usually because the conditions were not fully set forth to the oil dealer.

In the olden times, when the millwright got along with tallow, whale oil, lard oil and tar, the finding of a suitable lubricant for a high-speed job would have been a serious matter were it not for one thing which saved the situation. That one thing was, there were no high speeds! Square shafting lumbered along at 100 to 120 r.p.m. Water-wheels revolved from 15 to 50 times a minute, and steam engines were running very fast indeed when the crank shaft made 75 revolutions a minute.

The Glass Oil-Test.

Then when it was necessary to compare one oil with another, a clean pane of glass was procured, a drop of each oil to be tested was placed close to one edge of the glass with an inch or two between the drops which represented the various kinds of oil. Then the glass was tilted to a position nearly vertical, and the drop of oil which traveled farthest down the glass was declared the best oil. Time was kept on the progress of the several drops, and the one which went the farthest in a given time was named as the best "high-speed" oil, while the one which did not move out of its tracks was adjudged the best form of grease or slush for gears and heavy shafts revolving in wooden bearings.

As a refinement of this method of oil torture, tests were made at different temperatures, corresponding to the different seasons of the year, and in that way the millwright worried out for himself a set of standards by means of which he mixed his cow grease, hog lard, and whale oil in varying proportions which prevented the too frequent squeaking of the old-time wooden bearings, and prevented all but semi-occasional mill fires from hot bearings.

When mineral oil first became known, chaos reigned indeed in the "department of lubrication" and fakirs innumerable sprang up on all sides to the despair of the oil user.

An Oil-Testing Machine.

But things have changed. Today the oil agent is the millwright's friend and can help him out of many a trouble. There are but very few oil-making concerns but that are reliable and depend upon the researches of their chemists for the quality of the oils they manufacture. Oil testing no longer consists of a foot race down a pane of glass. Instead of that crude method of testing, each oil is placed in a machine, one type of which consists of a shell clamped over a cylinder. Between the two is placed the oil to be tested, the shell is clamped to the cylinder with a given pressure to the square inch, which can be varied as desired. The sleeve is prevented from revolving by a weight like a pendulum, placed at the end of a lever which in turn is attached to the sleeve. The weight and the distance at which it is supported can also be varied at will.

The cylinder is now revolved at a steady speed, which can also be varied or changed when desired, but which is kept constant at a predetermined surface velocity during an oil test. The rise in temperature of the cylinder and sleeve is also carefully noted, and each kind of oil is tested out under different speeds, various pressures, temperatures, and with continuous lubrication, intermittent lubrication, also with but a single charge of oil in the test machine, which is run until the known weight of oil contained in the machine has been exhausted. Thus the time factor is included with the factors of speed, pressure and temperature.

In this manner, each variety of lubricating oil is faithfully tested out and its capabilities become exactly known. The oil dealer places this data before the millwright or the oil user in the shape of suggestions as to which oil is most suitable for a given set of conditions. If the oil man is not given a knowledge of all the conditions, or if they are mistakenly represented to him, then it is impossible for him to name the particular variety of oil best fitted for the particular duty the machine must perform; hence the occasional necessity for a change of oil now and then, even when in line with the dealer's suggestions.

GREASE LUBRICATING.

Lubrication by means of grease should only be considered when the pressure is heavy and the motion slow. Grease is not suitable for any machinery running at high speed, but it works well on rough slow-moving journals—and on fine slow-moving ones also. For elevators, conveyors, and, in fact, for all journals where there is a good deal of dirt, grease lubrication is desirable. Albany grease, with its distinguishing smell of prussic acid (like the kernel in peach-stones), is not usually profitable as a regular lubricant, as it is usually rather too costly for that purpose. But on journals where other lubricants fail, and in places where cost of lubricant is of little account, then albany grease is of great value.

Albany Grease.

This substance is frequently used as a precautionary or reserve lubricant to come into action automatically. Albany grease is not liquid under ordinary running temperatures, and a cup of this material screwed into a hole in the cap of a journal bearing should be fitted with a copper pin or wire extending through the grease in the cup and terminating at the shaft against which the copper pin has a bearing. In case the regular lubrication fails and the shaft becomes heated, a portion of the heat is conducted along the copper pin, a portion of the albany grease is melted and runs into the bearing, thus supplying the necessary lubricant until such time as the regular lubrication is resumed.

In case of ordinary grease lubrication, the grease should be contained in a screw grease-cup, and by screwing down the cover of the cup, a portion of the grease is forced through the regular oil passage into the bearing. It would seem at first sight as if this were a very poor method of lubricating, but upon closer observation there appears much to commend. The lubrication is positive; the grease must go directly into the bearing as it can escape in no other way. An excess of grease will, if forced into the bearing, find its way out at the ends of the journal, and form rings or ridges around the shaft, effectually closing the openings to the entrance of sand or other dirt which may be adjacent to the bearing. Thus the grease-cup protects the bearing from sand in the case of elevators and conveyors.

A quantity of grease piled up at the ends of the bearing tells the oiler that too much grease is being used, and he will not force through as much on his periodical oiling trips. The worn-off metal is forced out of the bearing with the grease which is displaced daily by the fresh supply from the grease-cup, hence the bearings are kept clean and do not become filled up with worn-off shaft or babbit metal. Should the shaft or the bearing become hot, the heat will be communicated to the grease in the screw-cup, and the expansion of the mass by heat will cause an extra portion of lubricant to flow into the bearing, thereby supplying the lacking lubricant and cooling the heated bearing to normal temperature. Another thing: grease lubricating prevents the waste of oil so often seen where periodical or squirt-can lubrication is employed. The oiler cannot waste grease unless he does it on purpose, for he cannot pour one drop in the oil-hole and ten drops outside of the hole as is so often done when chasing the squirt-can. Taken all in all, grease lubrication is a good thing for slow-moving machinery, and the millwright is safe in using that method of lubrication on all bearings running less than 150 r.p.m.

LUBRICANTS FOR DIFFERENT PURPOSES.

While, as stated, the advice of the oil man can usually be safely followed, it is always desirable to know for one's self what is what for the purpose of checking the oil man should be prove otherwise than honest, and for holding in reserve in case the oil man fails to show up and the millwright must depend upon other than Standard oil products. For there are other oils than those derived from petroleum, and their proper use for different kinds of service, together with the proper place for other lubricants, is shown in the following table by Professor Thurston, who has done so much in investigating the value of various oils:

BEST LUBRICANTS FOR DIFFERENT PURPOSES.

Low temperatures.—Light mineral lubricating oils.

Very great pressures, slow speed.—Graphite, soapstone and other solid lubricants.

Heavy pressures with slow speeds.—The above, and lard, tallow and other greases.

Heavy pressures and high speeds.—Sperm oil, castor oil and heavy mineral oils.

Light pressures and high speeds.—Sperm, refined petroleum, olive, rape, cotton-seed oils.

Ordinary machines.—Lard oil, tallow oil, heavy mineral oils and the heavier vegetable oils.

Steam cylinders.—Heavy mineral oils, lard, tallow.

Watches and other delicate machinery.—Clarified sperm, neat's foot, porpoise, olive, and light mineral oils.

For mixture with mineral oils, sperm is best, lard is much used, olive and cotton-seed are good.

COLD TEST OF OILS.

One of the most important points in the selection of oils is the temperature which the oil can stand and still remain fluid. The determination of this property of oil is known as the "cold test" and it is performed as follows: A glass thermometer is procured for use as a stirring rod, and the sample of oil to be tested is cooled until it freezes. If necessary, the oil, placed in a four-ounce sample bottle, is packed in ice and salt until the oil solidifies. Then the bottle is removed from the cold pack and the oil allowed to soften, stirring constantly with the thermometer.

Close watch is kept over the oil and the thermometer, stirring and mixing constantly, until the oil will run from one end of the bottle to the other, The temperature indicated by the thermometer when this is the case is taken as the cold test of the oil.

CHAPTER XVI.

STEAM AND WATER PIPE-FITTING.

When it is necessary to lay out the steam piping for a mill or factory, it is the practice of the author to commence at the distribution end of the system, instead of at the boiler, and to work back from the pipes to each machine, increasing the size of the pipe at the junction of each additional pipe, until they have all been accounted for in the area of the main steam pipe from or to the boilers.

No hard and fast rules can be given for the laying down of steam pipes, and it will be best to present certain instances from which the reader may note the principle involved and calculate for himself in a similar manner any system of piping which his work calls for. A skeleton diagram should first be made, something as shown by Fig. 117, with the diameter of each steam opening plainly marked, and the manner of making connection with the main pipe also plainly indicated.

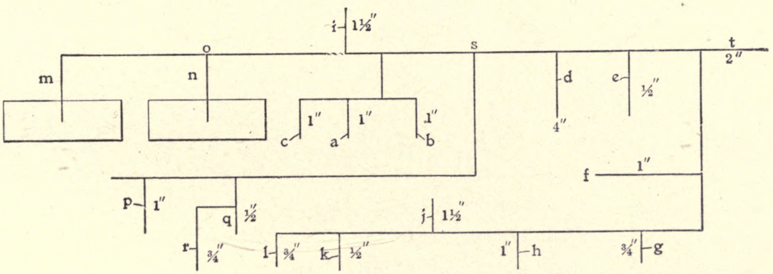

FIG. 117.—LAYING OUT A STEAM LINE.

a, 1-inch Injector.
b, 1-inch Steam Pump.
c, 1-inch Blower.
d, 4-inch Engine.
e, ½-inch Kettle Coil.
f, 1-inch Radiator.
g, ¾-inch Steam Jacket.
h, 1-inch Radiator.
i, 1½-inch Whistle.
j, 1½-inch Dryer.
k, ½-inch Steam Jacket.
l, ¾-inch Test Pump.
m, ? Boiler Connection.
n, ? Boiler Connection.
o, ? Main Steam Pipe.
p, 1-inch Radiator.
q, ½-inch Steam Coil.
r, ¾-inch Steam Jacket.
s, ? Pipe Junction.
t, 2 inches Extra for Increase.

Starting at the point farthest from the boilers, at *l*, it is found that pipes *k* and *l* unite in a common lead which must run along without increase in diameter until pipe *j* is admitted. The first thing is to determine the necessary size of pipe to serve pipes of ½ inch and ¾ inch in diameter. From a table of standard dimensions of wrought iron pipe it is found that the area of a ½-inch pipe is 0.304 sq.in. The internal area of a ¾-inch pipe is 0.533 sq.in., making at total of 0.837 sq.in. area for the two pipes. From the same table it is found that the area of a pipe nearest and larger than 0.837 is 0.861, which corresponds to a diameter of 1 inch. Thus the pipe from the junction of *k* and *l* to the point where pipe *j* enters should be of the size known as "one-inch, but having an actual inside diameter of 1.048 inches."

A very elaborate pipe table may be found in "Kent's Mechanical Engineers' Pocket-Book," therefore a pipe table will not be given in this book. The catalogs of pipe manufacturers also contain excellent pipe tables, and these may be had for the asking.

The pipe *j*, 1½ inches in diameter, has an internal area of 2.036 sq.ins., and added to 0.837, the area necessary is found to be 2.873 sq.ins. As there is nothing in the table between 1½ and 2-inch pipe, which has an internal area of 3.356 sq.ins., it is evident that 2-inch pipe must be used from the junction of *j* to a point where that diameter fails to accommodate the other small branches *h*, *g*, etc. The difference between the required area and the actual area is 3.356—2.873=0.483, or a little more than the area of a ½-inch pipe, hence the 2-inch pipe is not large enough to accommodate all the branches up to and including branch *h*.

As the branches up to *j* aggregate 2.873 sq.ins., and branch *h* calls for 0.861 sq.in. more, the pipe must be increased to an area of 3.734 sq.ins., and a 2½-inch pipe with an area of 4.78 sq.ins. is required. But there is now an excess of area equal to 4.78—3.734=1.046, or enough to more than take care of the 0.533 sq.in. of pipe *g*. But there is not enough area left to handle pipe *f*, which increases the total area to 5.128 sq.ins., against 4.87 in the 2½-inch pipe. Therefore another increase must be made.

The next largest pipe is 3 inches in diameter, and has an internal cross-sectional area of 7.383 sq.ins., leaving 7.383—5.128 =2.255 sq.ins. for the next branch. But the branch *t* happens to be a large one, 2 inches in diameter, and having an internal area of 3.356 sq.ins., or more than the excess noted, making it necessary to increase the pipe between *t* and *e* to 3½ inches in diameter, with an area of 9.887 sq.ins. The excess area at this point is 1.403 sq.ins., which more than accommodates the 0.304 sq.in. of branch *e*, the area called for being 4.788 sq.ins.

The next branch, *d*, is a large one, 4-inch pipe having an area of 12.370 sq.ins., and, together with the 8.788 sq.ins. of area already called for, requiring 21.158 sq.ins. area, or a pipe 6 inches in diameter, 28.89 sq.ins. area, and giving an excess of 7.732 sq.ins. area. But at this point, *s*, another pipe comes in, and as this pipe has several branches, these must be followed up to ascertain the size of the pipe which will supply them.

It has already been ascertained that a ¾ and a ½-inch pipe together require a 1-inch pipe and aggregate 0.837 sq.in.; the 1-inch pipe calls for 0.861 sq.in. more, or 0.837+0.861=1.698 sq.ins., making necessary a 1½-inch pipe to *s*. At this point, we have 1½ and 6-inch pipes uniting, but we will stick to the required area, instead of to pipe diameter, and say that 1.698+21.158 =22.856 sq.ins., or a pipe 6 inches in diameter is still large enough, with its 28.89 sq.ins. area, to carry both branches at *s* and some distance further. The blower and injector pipes *c* and *a*, each 1 inch in diameter, call for a 1½-inch pipe to the point where steam pump pipe *b* branches out from a 2-inch pipe leading from the main. The three pipes *a*, *b* and *c*, aggregate 2.583 sq.ins., and added to the 22.856 sq.ins. called for at *s* makes a total of 25.439 sq.ins. of pipe to be supplied, and the 6-inch pipe will still do it. There now remains only the whistle pipe *i*, 1½ inches in diameter, and calling for steam area of 2.036 sq.ins. Add this amount to the 25.439, and the sum total is 27.475 sq.ins., still less than the 28.89 of the 6-inch pipe, hence that size of pipe may be run from the junction of pipe *d* right to the boilers.

But at the boilers another problem arises. There are to be two boilers, and supposedly both are to be used to supply the steam. In that case, each would supply one-half the volume, and a pipe of 13.738 sq.ins. area, or 4 inches in diameter, would do the work. But in case the boilers are made large enough so that either one can supply the steam in case of emergency, then it would be well to make the piping larger between *o*, *m*, and *n*.

Six-inch pipe could be run right up to each boiler, but the cost of a 6-inch valve over each boiler would be considerable, and the millwright will probably cast about for some means of reducing the size of the connections. A 4-inch pipe will supply a 100 h.p. engine at the high pressure commonly used, and if two 100 h.p. boilers be connected at *m* and *n*, it is evidently unnecessary to provide more than 5-inch piping to each boiler, thus reducing the cost of fittings considerably. It is also possible to go over the steam supply pipes and pick out those which cannot, or will not, be used at the same time. In many concerns, there are numerous steam using machines which can be cut out during a pinch for steam. Thus, in some seasons, the steam radiators are not used for heating, and at other times the steam jackets are not needed.

Should it be possible to figure the pipe and fittings in this manner, a considerable saving may be made by cutting down the larger pipes a size or two. But unless the millwright be fully conversant of every detail of the steam consumption, he should go very slow indeed in putting in connections which may result in wire-drawing steam.

"RULE OF THUMB" PIPE CALCULATIONS.

The method given above for calculating the sizes of pipes required in a steam distribution system requires a little time and the use of pipe tables. There is an approximate method which gives fairly accurate results and which may be used without

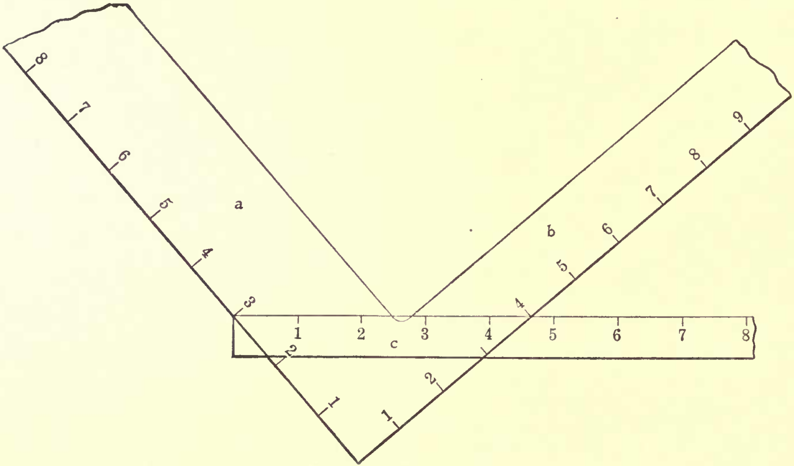

FIG. 118.—THE TRIANGLE OF PIPE DIAMETERS.

tables or other data. The method in question is known to the author as the "right angle method." It consists of laying off the diameter of a pipe on one leg of a triangle, as at *a,* Fig. 118, where a portion of a carpenter's square is shown. The other pipe is laid off on leg *b*; then the diagonal distance from one leg to the other between the two points will be the required pipe diameter.

For example: let it be required to find the diameter of a pipe which will supply two branch pipes, one 4 inches and the other 3 inches in diameter? Take 3 inches on leg *a,* 4 inches on leg *b,* then measure across from one mark to the other with a rule or scale *c,* and the distance will be found to be 5 inches, the diameter of a pipe which will supply branches of 3 and 4 inches in diameter.

ANOTHER OFF-HAND METHOD.

Even when a carpenter's square is not at hand, the millwright need not be at a loss to determine the equivalent of pipe diameters. Just square the diameters, add the squares and take the square root of the sum. In this case, it is $3\times3=9$, and $4\times4=16$. Then $9+16=25$, and the square root of $25=5$, the diameter of the pipe which will supply branches of 3 and 4 inches in diameter.

This method is not very exact, as the nominal, instead of the actual diameter of the pipe is taken. Take the case of a ¾-inch pipe and a ½-inch pipe, say pipes *k* and *l*, Fig. 117. Here we have $0.5\times0.5=0.25$, and $0.75\times0.75=0.5625$. The sum is 0.8125, and the square root is about 0.9 inch. As there is no pipe of this diameter, we must take a 1-inch pipe as noted when the pipe table was used. Should the reader use the actual pipe diameters, instead of the nominal diameters, then the results will be fairly accurate.

NOMINAL AND ACTUAL DIAMETERS OF PIPES.

It will be noted that the actual diameter of a ½-inch pipe is 0.622 inch. This makes quite a difference in the capacity rating, when compared with the nominal diameter of 0.5 inch. Still the method is very useful. For instance: how many 1-inch pipes can be supplied by a 4-inch pipe? $4\times4=16$, and $1\times1=1$. Then $16\div1=16$, and a 4-inch pipe will supply 16 one-inch pipes. The scheme is very useful for rough calculating.

It is to be regretted that steam and water pipes were not brought down to a standard of even inches or even fractions of an inch. With a ⅛-inch pipe with an actual inside diameter of 0.27 inch, and an 8-inch pipe 7.981 inches in diameter, it certainly is pretty hard to "know where you are at" in pipe matters. But as there is no prospect of any change in pipe dimensions, we must make the best of it as we find things.

Selection of Pipe and Fittings.

Ordinary or standard black pipe, from ⅛ to 1 inch inclusive, is butt welded, and tested to 300 pounds to the square inch. Pipe 1¼ inches and larger is lap welded, and proved to 500 pounds to the inch, and the millwright should keep well within these figures when handling steam or water under heavy pressures. There is also made and sold from stock a heavier pipe known as "hydraulic." This pipe should be used when very heavy pressures are to be resisted, particularly when there are shocks similar to those when the hydraulic ram is used.

Eastern and Western Standards.

Pipe fittings and threads are at present made to two standards, the Eastern and the Western. There is not much difference between the two, yet there is enough so that the pipe and fittings will not interchange with each other with the certainty of making a tight job. The author has frequently been put to great trouble by these duplicate standards, particularly when erecting in the West a lot of pipe sent from the East. The pipe tools purchased in the West at a local dealer's would not fit the pipe threads or the fittings, and endless trouble was encountered from this cause.

The best way out is for the millwright, when purchasing a set of pipe threading dies, to obtain a set of adjustable dies. Then the matter can be handled as desired, the dies set to fit the pipe threads sent out in the fittings, and there will be little trouble unless holes have to be tapped with locally purchased taps. Even then there is a remedy, for a pipe tap tapers ¾ inch to the foot, and it can be run into the work until it fits the thread sent out with the pipe.

Standard Pipe Fittings.

There is no reason why pipe heavier than "standard" should be used in ordinary power plants, as such pipe is ample to carry any pressure up to 250 pounds, but heavier fittings should be used for such pressures, and the threads will cover greater length on the pipes when "extra strong" fittings are used.

When it comes to flanged pipe and fittings, there are two recognized standards. One, for pressure up to 125 pounds, was adopted by a joint committee of The American Society of Mechanical Engineers, The Master Steam Fitters Association and the Manufacturers. The other standard for pressures up to 250 pounds was adopted by the Manufacturers on June 28, 1901, and is known as the Manufacturers' Standard.

Flanged fittings are also made in three weights by some manufacturers, and are designed for pressures of 50, 125 and 250 pounds. The millwright, when selecting flanged fittings, should see to it that the 50-pound weight is not worked off upon him when the 125 or standard weight is necessary. But as the thin flanges rarely are used on fittings less than 12 inches in diameter, there is not as much danger in that direction as might be expected. Some manufacturers list their pipe and fittings as "standard." for pressures up to 125 pounds; "full weight," for pressures between 125 and 175 pounds, and "extra heavy," for pressures higher than 175 pounds.

Standard Valves.

Flanged valves are made with corresponding thicknesses of flange as compared with thickness of pipe flange, and may be selected accordingly for different pressures. All weights of valves are made, and the "standard," "medium," and "extra heavy" correspond to the standard and heavy pipe weights, with the "medium" thrown in between. Then there are several types of valves which the manufacturer says little about, but fills orders with them when he is forced to do so.

A manufacturer of valves will give an outfit exactly according to the price paid for it. A good, durable 1-inch globe valve weighs nearly four pounds. Yet there are 1-inch globe valves which weigh only 1¾ pounds complete. These valves are known to the trade as "competition valves," and are pretty good valves (if you can screw them on without squashing them) until you try to close one against pressure. Then there is trouble. There is not enough metal in the valve to give the necessary rigidity, the metal springs out of shape and stays there, and the valve can never be made tight under pressure for the reason that the metal springs away as fast as a new surface is ground to a fit.

When selecting valves by competitive bidding, insist that each bidder designates the weight of each size of valve he proposes to furnish. Never permit a light-weight valve to be worked off upon you and there will be little trouble from leaky valves, whether globe, gate, plug or check. Cut down cost in other directions if necessary, but do not try it on pipe fittings and valves. They must be of the best. If you buy a cheap belt, you can favor it and repent at leisure until the belt is worn out. But buy a cheap valve and you are "up against it" every time that valve must be used, and in case of emergency, it is likely to cost more than the extra price of first-class valves and fittings for all parts of the factory.

Piping for Service or for Profit.

There are two methods of laying out a pipe system, one method is from the standpoint of the operating engineer, for convenience and safety, economy of operation and freedom from repairs and renewals. The other method of laying down piping sacrifices everything to first cost of the material. To illustrate: The author has personally known the manager of a contracting concern to force his draftsman to cramp an engine room, cause complications in the factory, and generally cramp things for the simple reason of limiting the distance, and the length of steam pipe between boiler and engine, to 16 feet! This manager was bound to save in the cost of three or four feet of 4-inch black pipe, even if the entire factory suffered from the uncalled for economy. Too much of this "fiat saving" is done by contractors at the cost of many times the original saving in cost of operation of the plant, or in repairs.

When pipe systems are laid out by the contractor's method, no attention is paid to convenience. Pump, injector and heater are placed where they may be connected by the fewest possible feet of pipe and the least number of fittings. Not a union or an extra tee is placed in the piping except where it cannot be avoided. If necessary to take down a portion of the piping to repair a frozen pipe, there is no union to be disconnected, or a "right and left" to permit easy repairs. Either the piping must be taken down for many feet, from a distant dead-end, or the pipe must be cut and a union purchased and put in when the pipe is made up again.

A tee and a plug cost a little more than an elbow, but the increased cost is as nothing compared with the saving when another bit of piping must be cut into the existing layout. Unions or right-and-left couplings placed in a few convenient places will save many dollars in a single rush job of repairing or in making additions. Above all, call for and specify pipe and fittings which will stand up under the pressure to be carried. Valves which will not stand grinding in are utterly worthless. If there is sufficient well distributed metal in a valve it can be made tight by regrinding many times and will last half a lifetime.

LAYING OUT PIPING.

When a job of piping is to be done, no matter how small, it is time saved to put it upon paper at once. No matter whether it be a single pipe, valve and elbow, if the dimensions are laid down, each piece may be cut to the right length, and everything will go together without a single "cut and try" being necessary, and without spoiling one or two pieces of pipe by cutting it too short. In laying down pipe, first find the length of the center lines as in Fig. 119, sketch A, in which the lengths of pipe are found to be 10 feet 6 inches, 2 feet 1 inch, 3 feet 11 inches and 20 inches long, respectively.

Next, the several valves, elbows, tees, couplings, etc., are laid down upon the sketch, as shown at B, conventional signs being used for the various fittings. In sketch A, risers, indicated by *r*, are twisted around 90 degrees so as to appear upon the plane of the drawing. In sketch B, risers are indicated by a small circle as at *f*. Different concerns have different conventional symbols for representing fittings. In sketch B, the signs, ordinarily used without any reference letters, represent the various fittings as follows:

a, Globe valve.
b, Cross.
c, Gate valve.
d, Tee.
e, Plug valve or cock.
f, Riser.
g, Elbow.
h, Check valve.
i, 45-degree elbow.
p, Pipe.
u, Union.
B, Boiler.

In the illustration, sketch B, the risers being indicated by a small circle, there is no opportunity for indicating the amount of pipe in the risers or the fittings placed along their lengths, hence a plan and an elevation are really necessary for actually obtaining the working lengths of the pipe on a job. There is another method of representing a pipe layout, which is very convenient, but which is often side-stepped by the millwright on account of its seeming complications, when really this method is more simple and much easier to comprehend than the combined plan and elevation method.

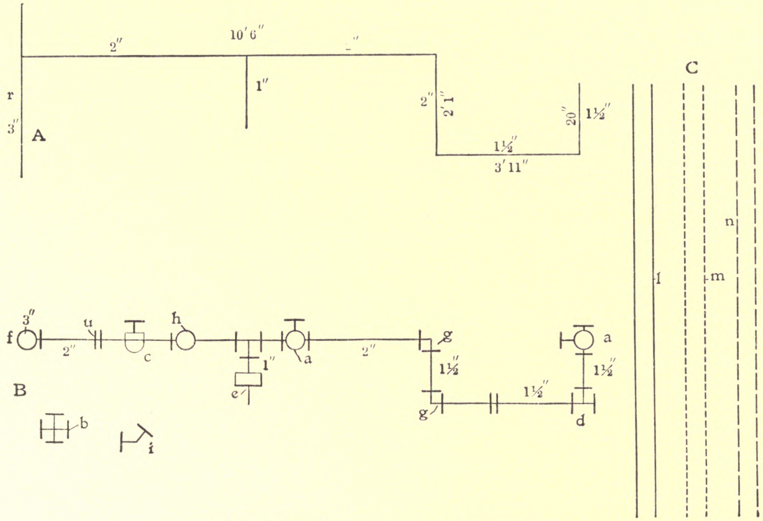

FIG. 119.—LAYING OUT PIPING.

PERSPECTIVE PIPE LAYOUT.

As shown by Fig. 120, pipes extending in any direction may be laid down to scale and actually measured upon a single drawing. This method of representing pipes is called "isometrical projection," and the angles used are vertical for the vertical pipes and 30 and 60 degrees from the horizontal for pipes leading in the other directions.

In this method of laying down pipe, each valve or fitting is drawn with just detail enough to permit it to be recognized. Thus the globe valve *a* is readily distinguished from the gate *c*, the check valve *h*, or the plug cock *e*. Also, the tee *d* is readily distinguished from the elbows *g*, *g*. But one thing in particular should not be omitted. In all three drawings, A and B, Fig. 119, and in Fig. 120, figures are placed adjacent to each piece of pipe, indicating the diameter of pipe to be used.

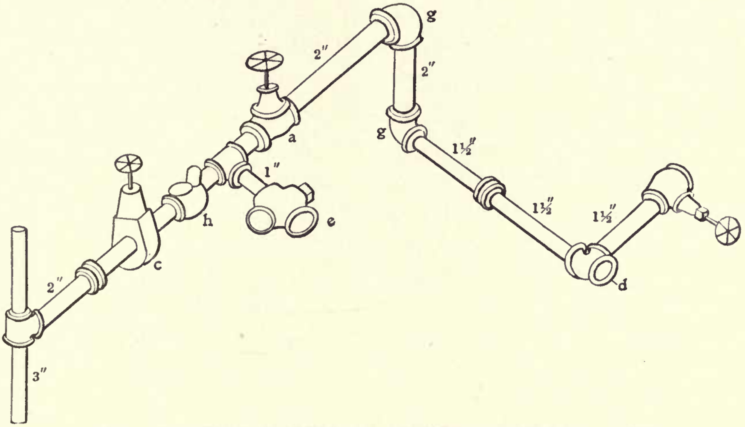

FIG. 120.—PIPE SHOWN IN ISOMETRIC PERSPECTIVE.

In some layouts it is well to use the conventions shown at C, Fig. 119, where main lines, return lines and drips are indicated by the whole lines *l*, dotted lines *m*, or the broken lines *n*, respectively.

Measuring Pipe Lines.

In measuring existing lines, or in taking measurements for new piping, always work from center to center of the different pipes. Thus in measuring for the 10 feet 6 inches of pipe shown in Fig. 119, measure from the center of pipe *f*, sketch B, to the center of *g*. When the lengths of the pieces forming this pipe are to be cut off, measure from the center of *f* to the center of *a* for one length, and from centers of *e* and *g* for the other length.

In cutting pipe to fit these measurements, allowance must be made for the dimensions of the several fittings which are to make up a portion of the total length of pipe between measuring points.

Thus it is necessary to work to the actual dimensions of the fittings in order that the over-all dimensions of the pipe lengths may be obtained. In laying down pipes on plans, and in taking off quantities from drawings, the length of each fitting must be determined, then about 1 inch allowed for the projection of each thread into its fitting, and the lengths of the several pipes worked up in that manner. When making lists of pipe and fittings, particularly for large or medium sized jobs, it is well to follow the same plan as described for listing power transmission material, on page 197, chapter XII, making the first, or erector's list exactly as the pieces are found upon the drawing, then compiling and adding like pieces in exactly the same manner that the buyer's list was worked up as described in chapter XII. In fact, if an erector's list and a buyer's list is made of the pipe laid down upon the drawing, there will be no errors in purchasing and checking the fittings, and no trouble in putting them in place in accordance with the drawings.

CUTTING OFF PIPE.

In cutting off pipe, the tools available must of course be used, but there are many things which, if neglected, go to make the job a poor one. Beyond all doubt the best way of cutting off pipe is with a cutting-off tool in a power machine, which actually cuts out a 1/4 or 3/8-inch chip. This method of cutting does not raise a bur in the end of the pipe, and when a dull wheel tool is used, the bur becomes so pronounced as to seriously reduce the internal area of the pipe. In any case, where a wheel cutting-off tool is used, the workman should be provided with a reamer by means of which the bur may be removed to the full area of the pipe. This should not be overlooked, for the reduction of area, particularly in small pipes, sometimes seriously affects the steam or water distribution.

Pipe 1/2 inch or less in diameter may be cut to advantage with a sharp hack-saw instead of the wheel cutter. The hack-saw will leave a clean end similar to that left by the cutting-off tool, but considerable care is necessary to prevent the pipe from ruining the saw. There is no danger until after the teeth cut through the wall of the pipe; then, while the saw is moving over the cut-through portion on one side of the cut, the saw is moving toward a sharp wedge-shaped section of pipe on the far side of the cut, and when this sharp edge draws down past the point of a saw-tooth, and takes the tooth on the square front face, pressure exerted to push the saw ahead can have only one result, namely: the tooth against which the pipe bears will be lifted right up and split off the hacksaw. Continual repeating of this action will break off so many of the teeth that the saw will become utterly useless.

USE OF THE HACK-SAW.

It is necessary, then, when cutting off pipe with a hack-saw, to cut around the outside of the pipe instead of cutting squarely through it. To do this, as soon as the saw cuts through the first wall, lower the hand so that the saw cuts new material, then guides into the cut already made, but does not get a chance to hit against the sharp wedge of the opposite side of the pipe. Continue to lower the hand, or to rotate the pipe, and it will soon be cut entirely in two, and not a tooth will be broken out of the saw.

The thinner the pipe the worse it is in regard to breaking the saw. Thus small pipe is much worse than large pipe, and thin brass tubing is worse than iron pipe. A brass tube 1 inch or so in diameter, with the walls 1/32 inch thick, will break nearly all the teeth out of a new sawblade if the attempt be made to saw square through the tube.

THREADING PIPE.

Pipe threading by hand tools when the pipe is more than 2 inches in diameter is not a job to be envied, and some way of doing the work by power should be arranged, no matter if the hand die must be used for that purpose. Hand die-stocks rigged for two or more men, with four to six handles, are in use, but their use should never be encouraged. It is better, if hand power must be used, to obtain a hand-driven machine, which will enable a man to do the work with some degree of comfort by simply turning a crank. Again, when large pipe must be cut off, the same machine will do it with a cutting-off tool, thereby obviating the necessity for the use of the squash-cutting, pipe-closing wheel cutters.

When a screw-cutting lathe is at hand, pipe may be threaded in that machine, and very long pipes may be threaded by placing a pipe center on a convenient post or a neighboring apple tree, removing the tailstock, and with the near end of the pipe held in the steady-rest and internally driven, cut the thread with a thread tool in the usual way. Pipe 20 feet long may be threaded in this manner in a lathe 48 inches long with swing enough to let the pipe pass over the saddle.

Small and medium-sized pipes may be cut off and threaded by means of an ordinary drilling machine. If the machine is a vertical one with a hole through the face-plate, so much the better. Just dig a pit deep enough to accommodate the length of the pipe which is brought up through the hole in the face-plate and clamped fast. Fasten the pipe die to a chuck on the end of the drill-spindle, and go ahead with the threading. The worst of this arrangement is that there is no reverse motion for running the die off the pipe after the thread has been cut, and it must be backed off by hand.

By chucking the die on the face-plate of a lathe and arranging a pipe-vise on the slide-rest, an arrangement is secured which will enable a man to cut pipe in record time without the necessity for converting himself into a windlass or a turntable during a wrestling bout with a large and heavy die-plate.

Keep the Tools Sharp.

A good pipe thread cannot be made with a dull tool, either in a die-plate or in a machine. Tools for thread cutting are now made so they may be sharpened readily, therefore do not use obsolete tools which cannot be readily sharpened when dull. It is impossible to make a good thread with a dull tool. It is impossible to make a good job at pipe-fitting when the threads are not good, hence it is useless to try to work with dull thread tools.

Avoid, by all means, a die which cuts the thread too small, and avoid a fitting which is too large. It is not possible to make up a first-class joint when the thread screws in all over and the fitting comes bang up against a shoulder, or screws right over the uncut pipe. Don't try to do a good job in this manner, for you can't. Many a joint has been "saved" when the pipe was threaded too small, by making up the joint with a bit of fine wire-cloth daubed in litharge and wrapped around the pipe before the fitting was screwed on. Sometimes the matter is varied by putting the wire-cloth inside the fitting, but the effect is the same —a first-class job will never be obtained in that manner.

Defective Pipe and Fittings.

In spite of the advertised statement that all pipe has been proven to a given pressure, say 300 to 500 pounds to the inch, there will always be found pieces of split pipe, blow-holes, defective fittings and other causes of leakage in a pipe line, no matter how carefully it may have been put up. Therefore, it is necessary to test each pipe system as soon as possible after it is in place. The testing must be done by internal pressure, either of steam, water or air. Either may be used according to the possibility of obtaining them, and the surroundings. Water pressure is preferable if it can be obtained easily, because leaks advertise themselves readily and are more easily located with water than when steam or air is used.

The plumbers use smoke for testing the pipes they erect, and the gas-fitters pump up an air pressure in the system of piping which is closed at all the outlets, and the inspection law requires that a certain pressure be maintained for a given time with only a stated drop. When this test is withstood by the system of piping, the job is passed by the inspector.

Defects in pipe and fittings, as found after erection, are usually in the form of split seams, bad threads, over-size fittings and blow-holes in the latter. Close inspection at the time of cutting and erecting the pipe is the best safeguard against these aggravating leaks, and when they are discovered in a finished job, there is nothing for the millwright to do but to take out the defective pieces or parts and replace them with new ones.

Finding Obscure Leaks.

It is probable that the only test the millwright can give to a steam line will be to turn on boiler pressure and then—hunt for leaky spots. Fortunately, steam condenses in pipes and usually the first intimation of a leak is a puddle of water which has dripped from the leak. But it sometimes happens that a leak will not put forth any water, particularly when the leak is on the top side of a horizontal pipe. Sometimes there are small leaks of this character, which may be heard, yet cannot be located, try as hard as one may.

When this is the case, mix up a bucket of strong soap-suds, using some form of soft soap if it is to be obtained. A good soap powder will answer. Common yellow soap may be used if necessary, but it is not as good as the others. When yellow soap must be used, mix a liberal amount of glycerin with the soap solution. With a common paint brush go over the pipe, daubing the fittings and along the weld of the pipe where there is any indication that a leak may exist. Keep a piece of white chalk with the paint brush, and wherever a leak blows bubbles through the soap-suds, mark with the chalk for a leak.

DRAINING PIPE SYSTEMS.

A difference of opinion exists between engineers and boiler users regarding the proper manner of draining steam lines. Some persons claim that the water of condensation should be led back to the boiler by inclining the steam pipe in that direction. Others claim that the flow of water should always be in the direction taken by the steam. It seems to the author that the persons claiming the best results from a flow toward the boiler could not have thought the matter through very carefully, or it would have been seen that with boilerward drainage there is always danger of water in the bottom of the pipe being held up by steam flow, even to the extent of a considerable amount of water. Then, when a sudden demand comes for an increased flow of steam, the water all along the pipe is picked up by the steam rush and forced out of the pipe to the great discouragement of the engine or other steam consuming device which may be located at the far end of the pipe line.

Drain the pipes always in the direction of the flow of steam, avoid pockets and traps and there will be no trouble with rushes of water into an engine or other undesirable receptacle for water of condensation. Separators should always be used between engines and long pipe lines, but with the boilerward drain scheme, separators are often overwhelmed by the rush of water and unable to take care of it, hence that portion of water which passes the separator goes on to knock out cylinder heads and double up connecting rods.

"Cutting" of Valves and Fittings.

Valves are often cut to pieces so badly that regrinding is impossible. Diaphragms, particularly those containing a hole for throttling steam, are frequently cut out to the almost full area of the steam pipe to which they are connected. In cases like these, we hear talk about the "cutting action of steam," but the representation is a mistaken one. The author has never found a case of cutting which could be traced to steam. Every case which has been investigated has been found to be due to matter contained in the steam, and particularly to the matter carried along by the water which accompanied the steam.

In certain cases, solid matter in small particles may be carried along with the steam and the cut fittings, particularly, valve discs and seats. Every case of this kind may be likened to passing a sand-blast through the valve. In that case, no man would accuse the steam of cutting anything. It is the action of the sand or other abrasive material which the steam carries along; therefore, in all valve or other cutting, it must be laid to the foreign particles which are carried along by the steam and probably in the entrained water. When superheated steam is used, there never has been any cutting as far as the author's experience has demonstrated.

Pipe Tongs and Their Use.

All too often the condition of pipe tongs is a disgrace to the man who owns or uses them—sometimes to both. Battered tools with the lips cracked, split or battered, will never do a good or a profitable job of piping. Pipes are frequently split, crushed or have sections sheared off by the use of defective pipe tongs. Many leaky joints are defective on account of the condition of the tongs, which prevented the joint from being properly set up.

Never try to work with dull or split pipe tongs. If the old style tool is used, with a single sharp corner to engage the pipe, keep that corner very clean and very sharp, and at just the right angle to properly engage the pipe. If the point is too taper, it will act as a chisel and cut a hole in the pipe, probably cutting through the weld. If, on the other hand, the angle is too great, the point will not hold against the pipe, and the tongs will either slip or the pipe will be flatted by the great pressure exerted in attempting to turn the pipe around. The well proportioned, well sharpened pipe tong engages the wall of the pipe in a tangential direction, and forces the pipe against the back of the tong where the friction of the tong against the pipe does a good deal of the pipe rotation.

The Stilson pipe wrench, which gives several teeth a bearing against the side of the pipe, is the usual tool employed nowadays, and the action of this tool is much easier upon the pipe than the old-fashioned single-lip tong. But the jaws must be kept in good shape, otherwise the same loss of time is the penalty.

For large pipes, the chain tongs hold their grip equally well on the pipes and on the confidence of the user. The grip of the chain nearly all around the pipe forms a support against the action of the sharp lips of the rolling lever, and it is very seldom that a pipe is cracked or split or is flatted by the use of chain tongs.

The Abuse of Pipe Tools.

Abuse occurs when the attempt is made to work a pipe with tools too small or too weak for the pipe to be handled. Screwing up a 2-inch pipe with an 18-inch Stilson wrench is an example of abuse, and the putting of a piece of pipe on the handle of that 18-inch wrench, in order to make up a joint in the 2-inch pipe, is an example of stupidity as well as of abuse. Other examples could be enumerated in abundance, but these are sufficient. The millwright has no use for them. No good mechanic ever does these things.

Air and Water Traps.

When running pipe lines for steam, the great thing to be avoided is the forming of pockets in which water may collect and thus cut down the capacity of the pipe. Under certain conditions, the pipe may become completely filled with water in spots and the flow of steam cut off until a lowering of pressure at the discharge end is sufficient to overcome the hydrostatic pressure of the collected water and that substance is driven out of the pipe. Water traps or "pockets" in a steam pipe are always to be avoided. They are very undesirable, and in some instances they become dangerous.

Water pipes are also cut down in capacity by pockets which may contain air. But in this case, instead of a low place in the pipe giving trouble, the high spots are to be avoided. A collection of air in the bend of a pipe passing over a high place in the line may, in many instances, cut down the pressure greatly, and in some cases entirely stop the flow of water. Particularly is this the case when the pipe acts as a syphon; the pressure or weight of the water in the discharge leg must overcome the weight of water in the supply leg of the syphon.

In water pipes under pressure, the action is the same, though the force not being limited to 14.7 pounds to the square inch can overcome to better advantage the presence of air in the pipe. In either case, the loss of pressure amounts to the loss of head equal to the hight of column of air in the pipe, calculated for an equal hight of water. Thus, pockets and traps must be avoided in both steam and water piping, and the straighter the pipes can be run, in a vertical direction, the better will the pipe line serve its purpose.

Dead-Ends and Drips.

Dead-ends in pipe lines should always be avoided if possible. No matter where placed, a dead-end always fills with water. If the pipe be a large one and the dead-end projects vertically upward, the water may run out as fast as it collects, but unless a dead-end is drained in some way, it will surely fill with water—and stay filled. The manner of its filling is through the condensation of the steam which flows to the dead-end. A pipe with a close end is much like an extended bellows. The condensing of the steam in the pipe is like the closing of the bellows. As everything—boards and leather—is drawn down upon the bottom board of the bellows, so every bit of condensed water is drawn to the dead-end of a steam pipe by the condensing of the steam in that portion of the pipe.

When it is required to maintain a circulation in a dead-end, a drip should be provided which will take care of the water of condensation as fast as it collects. Either a drip must be established or a loop must be made, whereby what would be the dead-end is connected into some portion of the steam system by means of which the water of condensation may pass away. When drips are used, they must either be operated by hand, or else fitted with traps to prevent a loss of steam. Hand-operated drips are wasteful of steam at best, and it pays to discharge all drips through a trap. When there are several drips, they may be made to work through a single trap by means of a receiver into which all the drips discharge, the trap taking care of the contents of the receiver.

Under certain conditions, the trap may be made to do duty as a receiver, but it is usually better to have an independent vessel for that purpose. In many instances, in running several drips into the same discharge, it is necessary to place a check value in each drip pipe in order that water may not be blown back into any pipe when that one is not in use and one or more of the others are under pressure. Sometimes it has been found beneficial to place a plug valve in each drip, adjacent to the check valve, in order that the discharge may be made more uniform under certain conditions.

In hand-operated drips, a most wasteful tendency or inclination is observed to let steam blow through when it is desired to heat things a little hotter than usual. This applies to steam radiators particularly. When there is a bit of cold weather, and a little more heat is needed, it is the custom of most people to open the drip valve and blow steam through the radiator until the vapor escapes into the atmosphere in clouds. This is a mistaken idea. All the steam that can be forced through a radiator will not warm the room any. It is the steam which is condensed in the radiator which does the heating. A pound of steam under 10 pounds gage pressure will, when cooled in a radiator down to 212 degrees, give up only 23 heat units. But when the same pound of steam is condensed in the radiator, it gives up 966 heat units; showing the very little benefit derived from blowing live steam through a radiator, and the great heating power of steam which is condensed in the radiator.

The Steam Loop.

There is a method of returning water to the boiler which is known as the "steam loop." This device, or rather this arrangement, is merely a dead-end of piping, so arranged that when full of water the liquid will run out by gravity, leaving the dead-end full of steam to repeat the operation of filling with water and automatically emptying itself. The operation of the steam loop may be understood by reference to Fig. 121, in which the steam loop is shown in connection with a steam boiler. A check valve, *a,* is placed in the pipe which enters the boiler at any convenient point, either in the steam room or below the water line. The pipe *d* connected with the system it is required to drain, acts as a dead-end, the check valve closing the lower end of the pipe, and closing it against the entrance of steam from the boiler side.

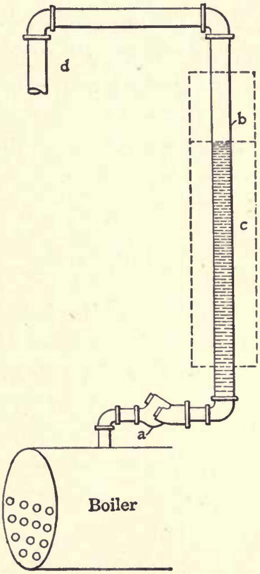

FIG. 121.—THE STEAM LOOP.

Any steam which may be present in pipe *d* is condensed and runs down upon the valve, filling the pipe to some point in the neighborhood of *b,* or so high that the weight of water on the check valve *a* forces open that device, whereupon the water in pipe *b* flows by its own weight into the boiler. Or, a portion of the water flows in, until the weight of water in the pipe is unable to hold the check valve open. Then the valve closes and remains closed until enough water to open the valve again collects in pipe *b.* If found necessary, the pipe *b* may be enlarged to contain a considerable quantity of water as indicated by the dotted lines *c,* which represent a large pipe or cylinder of any required capacity. As the steam pressure is nearly the same both below and above check valve *a,* the opening and closing of that valve will depend entirely—or nearly so—upon the weight of the valve check and the hight of the column of water which collects in pipe *b.*

Making Up Flange Connections.

In making up flanged joints, take care to have all union surfaces clean and free from metal chips, sand, or bits of string.

Any or all of these will cause a bad fit of the gasket and offer a path for the escape of steam or water under pressure. When tightening the bolts between a pair of flanges, make sure that the flanges are brought to an easy bearing, just touching the gasket, and that all the nuts are screwed easily down until they all bear evenly—screwed up by the fingers is tight enough—before any strain is put upon any nut. Then screw up each nut a quarter of a turn, passing from one to the other until all the nuts have had a quarter of a turn. Then go over them all, again and again, a quarter of a turn at a time, until the joint is tight and the bolts all have an equal strain upon them.

Above all things, avoid screwing up one nut tight and leaving another one loose. When the flanges are exactly the same distance apart all around the pipe, then it is pretty certain that the bolts are all bearing evenly and the joint will not leak.

Expansion of Steam Pipes.

The coefficient of expansion of iron is given by Howard, engineer in charge of the U. S. Testing Machine at Watertown Arsenal, as 0.0000067302 inch per inch for each degree of temperature Fahr. Then, a pipe heated 300 degrees, and 100 feet long, would have an elongation of 0.0000067302×100×300×12= 2.322872, or about 2 1/3 inches. In pipe fitting, about this amount of elongation must be taken care of. Sometimes it is necessary to use expansion joints where sliding surfaces are

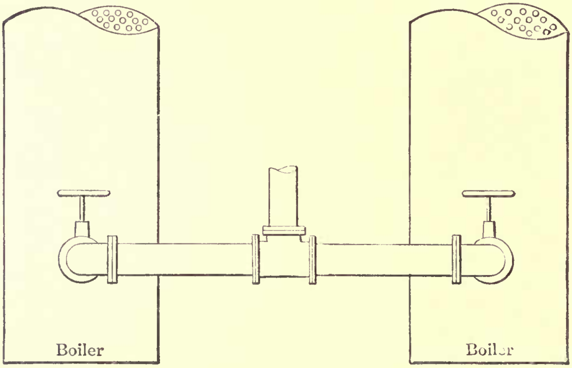

FIG. 122.—BADLY ARRANGED PIPE CONNECTIONS.

arranged, but, if possible, it is preferable to use one or two angles in the pipe and let the lever arms thus secured take up the elongation by swinging sidewise.

In connecting boilers, for instance, there is nearly always trouble when they are joined as in Fig. 122, the main pipe extending straight across from one boiler to the other, and the expansion of the pipe serving to spread the boilers apart and to break the connections between them and the pipe. A properly arranged steam connection is shown by Fig. 123, the expansion in pipe *a* being taken up by the lever arms connecting pipe *a* with the boiler, and the expansion being felt at *b* and at *c* by merely a slight twisting movement at those points, which is easily absorbed either by the pipe threads, or by a movement around the bolts if the connections are flanged. Sometimes the swing is taken up by a slight bending of the pipes connecting *a* with *b* and *c*.

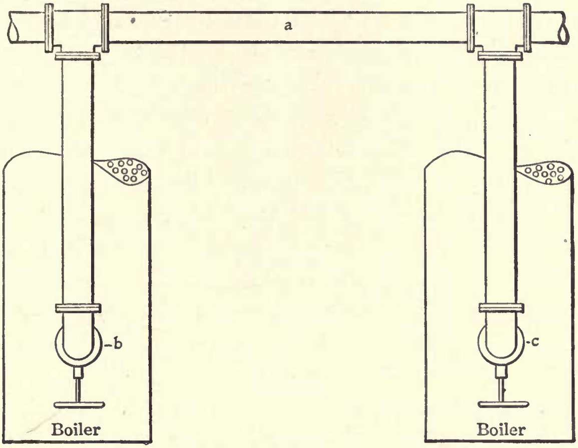

FIG. 123.—BOILERS PROPERLY PIPED.

Packing and Regrinding Valves.

Globe stop valves usually come with a bit of wicking in the stuffing box around the stem. Never steam up without first repacking the stems with more and well lubricated packing, either wicking or some specially prepared material. Soapstone or plumbago should be used, with a little cylinder oil, in the stem-packing of steam valves. The author makes it an invariable rule never to quit a steam line until each and every valve has been stem-packed and the bonnet removed after steam has been blown through the pipe under full boiler pressure with the far end of the pipe wide open.

This drives out thread-chips and other dirt which may be in the pipe; then, upon removing the bonnets before closing any of the valves in the line, there is a chance to remove any large fragments of metal which may have lodged across the seats. A good deal of trash is sometimes found in the globes of valves in this manner, trash which would seriously injure the valves had they been closed without first removing the bonnets, as described above.

Every pipe system should be provided with a good valve regrinding layout, and as soon as a valve leaks, remove the bonnet, true up the seat and disk—or put in a new disk—and that valve is good for years of use if thus decently treated and taken care of. The millwright can make a set of valve files for use with the breast drill or bit-brace, but it is time and money saved to purchase one of the many good sets of valve regrinding tools now in the market. And when purchased, use them frequently. Never wait until a valve leaks badly before regrinding. "Regrind as soon as found leaky" is the watchword for valves.

And one word more—repack a valve the instant it will not screw down tight enough to stop steam coming out around the stem. Leaky valve stems are always an indication of a lazy, slip-shod management.

Making Up Pipe Joints.

For making up permanent screw joints in pipe, where it is not necessary to break the joints again, nothing is better than good red lead, though litharge (yellow oxide of lead) answers nearly as well. For screw joints which may have to be taken down frequently, plumbago mixed with cylinder oil, makes a good material for daubing either threads or flanges; it is also good on flange bolt threads. For threaded pipe, use as thick as possible. A mixture which will run is too thin. It daubs things too much. For flange use, it may be mixed thin enough to allow of being spread on the surfaces with a brush. When nice work is required, daub the inside of fittings, valves, etc., and it will not show as when daubed on pipe, nipples, etc.

Cutting Gaskets and Packing.

When a washer cutter is at hand, soft gaskets may be cut to measure in advance, but for irregular work, and when circular gaskets are not on hand ready made, there is no better way of cutting them than with a round-face or ball-pene hammer in the good old way, hammering the sheet of packing lightly over the edges of the flange, taking care not to hit with a corner of the hammer, or to strike hard enough to mar the edge of the iron surface. Hammer around the edge of a bolt-hole first, then slip a peg into the hole, and hammer around another bolt- or stud-hole. Another peg in the last hole and the packing and casting are held firmly together, allowing the rest of the cutting to be hammered off with little trouble in holding the packing in place during the operation.

If it is desired that the gasket should come off whole, when the joint is broken, then dress it with plumbago before making up the joint. If a permanent joint is desired, use red lead or litharge in making up the joint. If there is trouble in holding the packing in place, treat it with litharge and glycerin, let the steam pressure come upon the joint gradually, tighten up well and after pressure is on, and that gasket will never come off unless it is chipped off with a chisel. Litharge and glycerin make an excellent cement for stopping cracks in iron; it is steam and acid proof, and stays right where it is put.

CHAPTER XVII.

ERECTING STEAM ENGINES.

The setting of a steam engine should commence with the building of its foundation; and even before that—with the design of the foundation, which should be broad enough at the bottom, where it bears upon the soil, that no tremble or shake will ever cause the foundation to settle in whole or in part. The office of an engine foundation is threefold, or it must fill three requirements, either fully or partially, according to the surroundings. Briefly stated, these three functions of the engine foundation are:

I.—To support the mass of the engine at a given hight or level.
II.—To preserve alinement of engine with the main shaft.
III.—To absorb vibrations of the moving parts of the engine.

A few timbers thrown upon the earth would hold the engine as far as the first requirement is concerned, but might not fill the others. But in connection with the second requirement, the foundation must be so well distributed, according to the nature of the earth underneath it, that there can never be any possibility of settling. The load to the square foot must be light. While building foundations are frequently loaded to one ton, or even two tons or more in ordinary earth, engine foundations seldom carry more than 1000 pounds to the square foot, including the weight of the foundation itself. The millwright is safe in taking this load as the limit for engine foundations.

FOUNDATIONS TO ABSORB VIBRATION.

A balance wheel may be likened to a rotary dash-pot for the purpose of absorbing or equalizing the irregular forces which act to retard or accelerate the movement of the wheel upon its axis. The foundation is to absorb in a manner somewhat similar the vibration of the several parts of the engine. Thus it is necessary that the foundation be constructed in a single mass, or so fastened together that one portion cannot move independent of the other portions. For this reason it is best to make the foundation of concrete, in a single block, or monolithic. Thus a foundation composed of well proportioned concrete is preferable to any other kind, although brick or stone may be used to advantage if these materials are cheapest.

SUSPENDED FOUNDATIONS.

For the purpose of absorbing vibration, and incidentally helping the designer of the machinery to cover up some inferior work —the engine would not vibrate if all parts were perfectly designed —it does not matter whether the foundation is placed on the ground or is suspended by means of rods from some overhead structure. In a case of this kind, however, it would be necessary to reinforce the lower portions of the foundation so that no part of it shall be in tension. There is some tensile strength to concrete, but good engineering—and good millwrighting—requires that the tensile strength be neglected in every instance, and that steel sections be put in, capable of carrying every particle of the tensile stress with a good factor of safety. This holds good in *all* concrete, whether for a foundation, a floor, a beam or a wall.

ALWAYS USE A TEMPLET.

Never attempt to build a foundation for an engine, or for any other machine which requires anchor bolts, without first constructing a templet, in which the location of the bolt-holes are an exact duplicate of the holes in the engine frame. The center line and the shaft line shall both be marked upon the templet in their exact positions in relation to the bolt-holes which they occupy in the engine. The templet is usually made of 7/8-inch boards fastened together with clinch nails or screws, though it would be a profitable arrangement for engine builders to keep in stock some knock-down templets made of light steel angles and channels, these templets being sent out with the engine, or in advance, and returned to the engine builder after having been used.

SETTING ANCHOR BOLTS WITH THE TRANSIT.

Anchor bolts for engines and other machines are frequently set with the transit for the purpose of dispensing with the templet.

Where there are only one or two bolts, this method answers very well, but when there are numerous bolts, as in case of an engine, the possibility of error is in proportion to the number of bolts, and this proportion is considerably increased by the possibility of some of the bolts being pushed out of place during the construction of the concrete. By the templet method, the bolts being suspended from the templet, there is little danger of one or two bolts being disarranged. If one bolt goes, all must go.

CONSTRUCTING A TEMPLET.

Fig. 124 represents a templet layout as arranged for an engine of the detached outboard bearing type. First draw the center line *a b,* sketch A, on a floor or smooth platform large enough for the laying out of the foundation full size. Next draw the shaft line *b c,* taking care to make this line exactly at right angles, or perpendicular to the line *a b.* The millwright will "square" one line with the other. The radius-board, chapter V, page 51, is

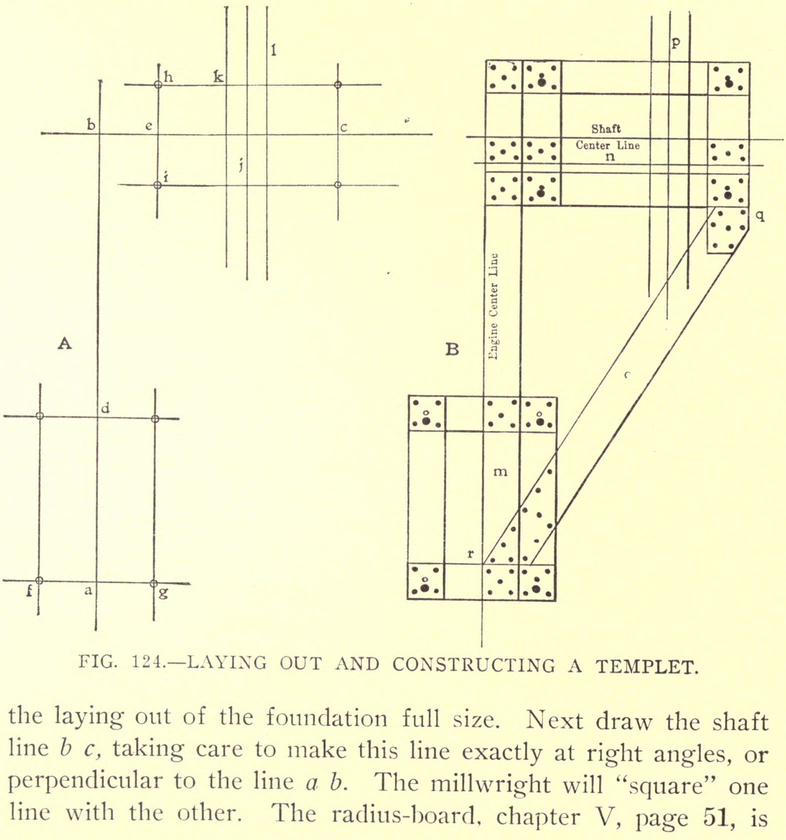

FIG. 124.—LAYING OUT AND CONSTRUCTING A TEMPLET.

the proper appliance for use in squaring these lines with each other. Next lay off the distance *b d,* equal to the space between shaft line and anchor bolt holes under front end of cylinder. Next find the distance *a d,* and lay that down, locating the holes in the head end of cylinder. The distance *a f* and *a g* locate the space between the holes *f* and *g* at *a,* as well as at *d.* Next locate the holes at *h i,* on line *e,* also on line *c,* the latter being for the outboard pillow-block anchor bolts.

If there are to be other bolts in the foundation, they should be located as above. Some engines have an anchored arm or bracket to carry the end of the rock shaft. When such a bracket is attached to the foundation, it should be located on the diagram. When dash-pots are used, they also should be located, and it is well to mark the diameter of the exhaust pipe where it drops below the floor level and a pocket or cavity must be left for it in the concrete. These things are not shown on the diagrams either at *A* or at *B.* The millwright may mark or omit them as he chooses. One thing should always be marked, and that is, the center line and faces of the engine pulley, as at *j,* which indicates the center line, while *k* and *l* represent the faces or sides of the pulley. These lines are very handy for locating the templet when it is necessary to bring the engine to a pulley already located upon the main shaft.

The diagram is now ready for the templet which is to be built upon it. Procure some good sound lumber, white pine, spruce or yellow pine. Do not use whitewood, it warps too much. White pine is the best, but that is probably out of the question. Spruce will answer very well, and yellow pine makes a fine templet but a very heavy one, as green yellow pine boards 1-inch thick weigh five pounds to the square foot. Use dry lumber. If necessary, dry it before making the templet, for if green the templet will not remain accurate. Hemlock may be used but it is not very desirable lumber.

Have the boards planed on four sides if possible, on one side and one edge, anyway. It is possible to make a templet from rough undressed boards, but it is not a desirable thing to do and the accuracy is apt to suffer by so doing. Even with rough lumber, one edge of two boards must be jointed straight and placed one upon each center line as at *m* and *n,* sketch B, Fig. 124.

Some mechanics construct templets with the center line drawn down the middle of one of the boards, but the author finds it better to take the edge of a board as the center line whenever possible. This has been done on both the cylinder and shaft center lines, thus locating the center lines in a manner which can not rub out as sometimes happens when a line is used down the side of a board.

Sketch B shows so plainly the method of constructing the templet that little further direction is necessary. The brace *o* must be carefully located and fastened to make sure that there is no shifting of the outboard bearing bolt-holes. It will be noted that the brace *o* bears against the templet firmly at *q* and at *r*, the brace being carefully fitted at those points, then firmly clinch-nailed or screwed as indicated in sketch B. The wheel location is shown at *p*, enabling the templet to be readily brought to the necessary point, and permitting the masons to see where the wheel is located, thereby keeping the foundation free from possible interference with the lower side of the wheel.

Setting Up a Templet.

The templet may be placed on ledgers which are supported by posts like ordinary batters, or the ledgers may be suspended from overhead. The latter method is far more preferable as it leaves the space around the foundation free from all timbers or posts which would interfere to some extent with the movement of workmen and material. A templet suspended from above is best. It is good practise to locate the under side of the templet upon the finish level of the top of the foundation, thus allowing measurements to be taken direct from that surface.

The templet should be alined by the transit, or if that instrument is not available, the "plumb-bob and sight line" method may be used as described in chapter XIV, page 269. The concrete should be selected as noted on page 74, chapter VI, and it should be mixed wet enough that water will stand on top of each layer after ramming. As long as the cement is not washed away, too much water cannot be used in mixing or placing concrete. *Never* put concrete in place while so dry that water cannot be brought to the surface by tamping.

PLACING ENGINES UPON GREEN FOUNDATIONS.

The forms may be constructed as directed for foundations, in chapter VI, page 60. The engine should not be placed on the foundation for at least one week after the cement was rammed. Two weeks is better, but one week will answer if care is used in working on the green concrete.

Sometimes it is absolutely necessary to place a machine on a foundation at once. Concrete may be prepared to receive a load in 36 hours if absolutely necessary. To do this, heat the concrete mixture while dry by shoveling it over a piece of sheet iron with a fire underneath. Heat the material as hot as possible up to the boiling point of water, then gage with boiling water and in very small quantities, and ram in place immediately, for cement thus treated sets very quickly.

As fast as the concrete is rammed, surround it with bagging, shavings, sawdust or a similar substance, and keep the covering wet with hot water. Steam may be used for this purpose if available. As soon as the concrete has been all rammed in place, cover fully with heat retaining material as above described, and keep moist and hot for 18 hours at least, and 24 hours will be better. At the expiration of that time, remove the form, or better yet, slide back each portion of the form, leaving two or three inches between the foundation and the form. Cover outside of the form as before with bagging, boards, shavings, or even with earth outside the boards, an dthen turn live steam into space between the displaced form and the concrete foundation. Twenty-four hours of steam treatment, keeping the concrete at 212 degrees F., and the outside of the concrete, at least, hardens so it will carry 1500 to 1800 pounds to the square foot safely. The interior of the concrete will harden quickly if it be heated to the degree mentioned. If the material be heated, and the whole business kept hot, the hardening temperature will probably be reached entirely through the foundation, but if it be rammed with cold concrete and the attempt made to steam harden, it is extremely likely that only the outside of the concrete will be hardened owing to concrete being a very poor conductor of heat. This is one of the reasons why concrete is fireproof. It takes so long to heat a body of concrete that any ordinary fire is extinguished or has burned out before many inches of concrete have become heated to the point of failure.

FOUNDATION BOLTS AND POCKETS.

When it was the custom to build brick or masonry engine foundations, it was also the custom to get out top and bottom pocket stones with holes drilled through them to accommodate the anchor bolts. With concrete foundations, cap and pocket stones are not necessary, and the anchor bolts may be built right into the foundation, or the bolts may be later placed in holes formed for their reception by placing pieces of steam pipe in the templet holes which were enlarged for this purpose. Some constructors withdraw the pipes, some leave them in place. The author prefers to withdraw the pipes and fill the spaces around the pipes with neat cement.

When anchor bolts are to be inserted afterwards, pockets may be left through which to adjust the nut and washer at the lower end of each bolt. All that is necessary to form a pocket is a piece of board with a hole bored to fit rod or pipe, and two other pieces, tapered from one end to the other, for the sides of the pocket. Hang the top board on the bolt or pipe, place the taper side boards under the edges of the top board. Place a brick or a flat stone against the inner end of the three bits of board, then fill between them with sand which should be tamped in well. Do not nail the pieces of board together. The sand will prevent them from falling down until the concrete gets next to them, and they could not be forced down after that.

WHO SHALL FURNISH ANCHOR BOLTS?

Sometimes it is necessary to use pipes large enough to permit the passage of a hexagonal nut on the lower end of an anchor bolt. In cases of this kind, the anchor bolts are dropped into the pipes which are then filled with neat cement. The only excuse for this method of setting anchor bolts is that they have not come to hand when the foundation is being built. The lack of foundation bolts at the time they are wanted has led to all sorts of methods of providing the bolts. Some machine manufacturers do not furnish them at all. Other manufacturers send bolts on ahead of the machine or engine, and still others send the bolts with the machine.

The excuse made by some concerns for not including anchor bolts with their machines is that, owing to local conditions, the length of the bolt is liable to be changed, and if they have to be cut and welded, the purchaser might as well make his own anchor bolts as to pay for the bolts and then for changing them. This point is well taken, but the real reason for not furnishing anchor bolts is that the manufacturer gets just as much for his machine or engine without the bolts as he does when bolts are furnished. By applying the "something for nothing" principle, the manufacturer simply gets rid of paying for the bolts—quite a tidy saving when hundreds of sets of bolts are figured up.

Alining the Engine.

When accurate work is required, as is necessary in all large engines, the cylinder should be alined to coincide with the building line before the frame is fastened by the anchor bolts. There is no better way of alining an engine than by stretching a string through the cylinder after the head, piston, piston rod and crosshead have been removed. Engines of considerable size are shipped with all the separate parts securely boxed, to be assembled after arrival. Smaller engines are shipped completely or partially assembled, but it is the unvarying custom of the author to dismantle every engine he is to erect, and to find by personal inspection the condition of the hidden parts of the engine.

The engines of today are the best ever made, yet, as closely inspected during manufacture as all machinery parts are supposed to be, there is opportunity for something to be passed which will give trouble if not detected at the very start. Hence the habit of personal inspection, which has always served the author well.

Personal Examination of Work During Erection.

In one instance, when the valves of a corliss engine were taken out to note the manner of their fitting, a bit of loose core sand was noticed in one of the ports. Investigation revealed the fact that the sand-blast had evidently been forgotten when that engine casting was cleaned up, for from the ports of that engine was taken *four quarts of core sand!* Imagine the manner in which the valves and piston of this engine would have stood up (or lain down) to its work had it been started before the presence of core sand had been discovered.

Look to the fit of the bearings and do not be afraid of scraping. Shop work is sometimes worked upon such a high-pressure system that the man in the shop says: "Oh! that's good enough. Get it out of here. Let the man who sets it up do the rest of the fitting —he hasn't got anything to do anyway except to bolt the thing together, and he can fix that as well as not." And so it goes. The shop man makes a record in getting work off his hands and the field man spends his time writing letters to the shop in the hopes of having shop work done in the shop.

The old adage that "eternal vigilance is the price of liberty" may well be adopted by the millwright, who furthermore should make up his mind to see personally every internal part of each machine he sets up. It is only right that the "ounce of prevention" examination should be employed to prevent the "pound of cure" overhauling from being necessary after the new machine has been started and has failed to work satisfactorily.

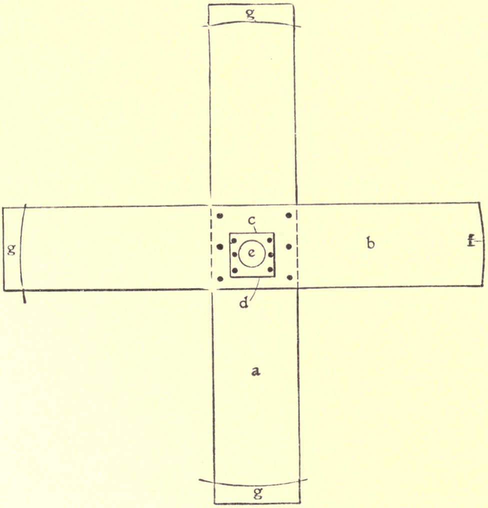

FIG. 125.—CROSS FOR CENTERING HEAD END OF CYLINDER.

A four-armed cross should be sent out with the engine, which will just fit inside the counterbore of the head end of the cylinder. If the cross has been overlooked, make one as shown by Fig. 125. Two pieces of board, 2½ or 3 inches wide, are halved together and screwed or clinch-nailed as shown; then a hole, ⅞ or 1 inch in diameter, is bored through at *c*, a bit of tin or other thin metal *d,* is tacked over the hole, and a small hole *e,* just the size of the line used, is pierced through the tin as shown. This hole is used as a center from which to strike the circle *f g g g,* which is the exact diameter of the cylinder counterbore. A mark is made on each end of the wooden cross as at *g, g,* then each arm is cut off exactly at the marks, as shown at *f,* thus leaving the small hole *e* in the exact center of the wooden cross which in turn fits snugly into the cylinder counterbore.

ADJUSTING THE CENTER LINE.

The line *c d,* Fig. 126, consisting of a string or a wire, has been passed through hole *e,* Fig. 125, knotted, then threaded through the cylinder, from which it passes out by means of the rod hole and gland as shown by Fig. 126, the free end of the line being attached to a target and pulled tight. The problem now becomes twofold. The line must be centered in the gland of the stuffing box by means of a pair of inside calipers which are applied as shown at *a,* and also applied at *b,* the position of the engine bed being adjusted until the line *c d* lies as close to the center of the gland as human skill can determine. This is one part of the problem. The other is to maintain the line in its position in the center of the cylinder, and at the same time so move the engine bed that the line *a b* shall be brought perpendicular to, or "square with" the main shaft line.

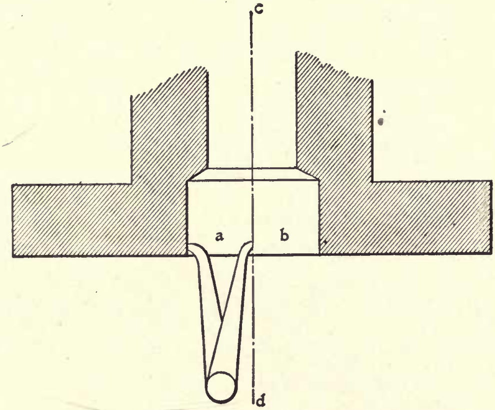

FIG. 126.—CENTERING LINE IN GLAND.

If the alining and measuring have been accurately done, the templet properly located, and the anchor bolts set without having been moved out of place, then there should not be more than a quarter of an inch movement necessary in the engine bed in order to bring the line *a b* to coincide with the building line, or to square the shaft line. It might well be said that the problem was a triple instead of a double one, for the level of the engine bed has to be maintained while it is being brought into line with the shaft.

Some engine builders have simplified this lining-up business a great deal by casting a couple of lugs on the engine bed. These lugs are machined at the time the cylinder and guides are bored, thus making it only necessary to line up the two finished lugs, and the cylinder will be in its proper position.

Fastening the Engine Bed in Position.

The engine bed having been accurately lined up, and temporarily supported in a level position upon wedges, as described for machines, on page 267, chapter XIV, proceed to put in cement, brimstone or lead as there described, after which the anchor bolt nuts may be tightened. Another test should be given with level and inside calipers, after the anchor nuts have been tightened, to see if anything has been pulled out of line or level by the tightening of the nuts. Sometimes this happens, but not often, and never if the wedging and filling under the bed has been properly done. If one portion of an engine bed is pulled out of place by the foundation bolts it is convincing evidence that the foundation has not been properly built, or that the bed casting has not been properly fitted to the foundation. In any instance it means "investigate," and do the work over again until it will pass the inspection of screwing down upon the anchor bolts.

Squaring the Engine Shaft.

The shaft should be alined to the mill shafting by one of the methods already described and it should be checked to the line drawn through the cylinder. A method for doing this is shown by Fig. 127, in which *a b* is a portion of the line through the cylinder, and *c d* represents the center line of the engine shaft, which should be revolved until the wrist-pin *e* is brought as close as possible to the line without touching. While in this position the distance to the fixed collars on the wrist-pin is measured with a steel scale or with the inside calipers. The line *b* should be equidistant between the fixed collars on the wrist-pin, as shown at *e*.

After making this measurement, the engine shaft should be revolved carefully until the wrist-pin again comes almost to the line *a b,* as at *f*. Here the distance to each collar is again carefully measured, and if equal to the measurements made at *e,* then the shaft *c d* is "square" with line *a b,* and consequently is square with the engine. If the measurements at *e* and *f* cannot be made to agree, and to equal each other, then something is wrong, and the millwright must "take it out and look at it" until the error is found and corrected.

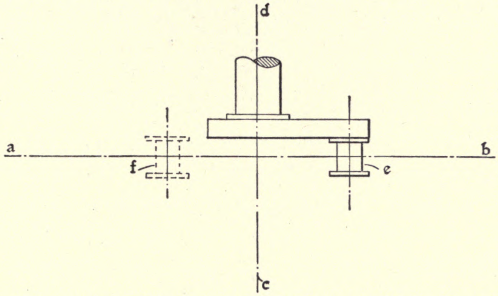

FIG. 127.—CHECKING ALIGNMENT OF ENGINE SHAFT.

Sometimes the distance *e f* is increased by keying the connecting rod tight to the wrist-pin, and then measuring from the crosshead end of the rod instead of from the wrist pin. Then revolve the engine shaft as before, and measure again. Usually, the wrist-pin measurement is all that will be necessary.

ADJUSTING THE MAIN BEARINGS.

It is a matter of great importance, both when setting up the engine as well as when tightening the main bearings, to make sure that the shaft is and remains "square" as above described, also that the wear of the main journals does not cause the piston to approach one head of the other so close as to strike it. Sometimes a knock which is very hard to locate is caused by one head being touched by the piston.

The clearance at either end of the cylinder should be watched very closely while making up the main bearings. Not only should the clearance be equalized, but it should be kept equal, not only when making up the bearings, but when taking them up against ordinary wear. Place the main bearing, also the outboard bearing, in the center of the housing; then test the clearance. This may be done in two ways, the first of which is to procure a bit of mirror—a pocket mirror will do and may be kept for the purpose—and prepare it by removing the silvering from a spot in the center of the glass about $\frac{1}{4}$ inch in diameter.

Equalizing the Clearance.

Place a light close to one end of the cylinder, remove the plugs from the indicator holes, and with the glass in front of the eye and looking through the hole in the mirror throw a beam of light into the indicator pipe hole and observe the distance between the piston and the cylinder head when the crank is on the center. Make a similar observation at the other end of the cylinder; then move the quarter boxes in the main bearings until the observed distances between piston and heads are equal to each other.

The author much prefers the second method of determining the clearance between piston and heads, which is: Insert in each indicator pipe hole, or in the cylinder drip holes if there are no indicator openings, a piece of soft lead wire or small lead pipe as large as will go into the openings in question. Turn the engine pulley until the crank has been on the center in either direction, then withdraw the pieces of lead and note if they have both been flatted to the same thickness. If they have not, move the shaft in the proper direction one-half the difference of thickness of the two pieces of lead.

Care must be taken in flattening the pieces of lead not to allow them to project too far into the cylinder, less the lead should be flatted out so wide that it could not be withdrawn through the indicator pipe hole. This would happen were the piston too close to one end of the cylinder. A little care in this direction will prevent fastening the lead in the holes. Sometimes when lead is not handy, a soft wood stick may be used instead. The flatting of the wood must be quickly noted, less it springs back and leads the observer to believe that more room is present than really exists. Again, it is possible to place the engine on the dead center and test the nearness of the piston with a thin wedge inserted through the indicator pipe hole.

Putting on the Engine Pulley.

When an engine pulley is cast in one piece, it is usually best to roll it into place and block up underneath, high enough to permit the shaft to be pushed through the pulley. But when a split pulley is to be erected, if two sets of hoisting tackle are available, one may be arranged for each half of the pulley, and both pieces hung up together. But when there is only one hoisting rig available, then a little rigging up will be necessary in order to handle a heavy split engine-pulley.

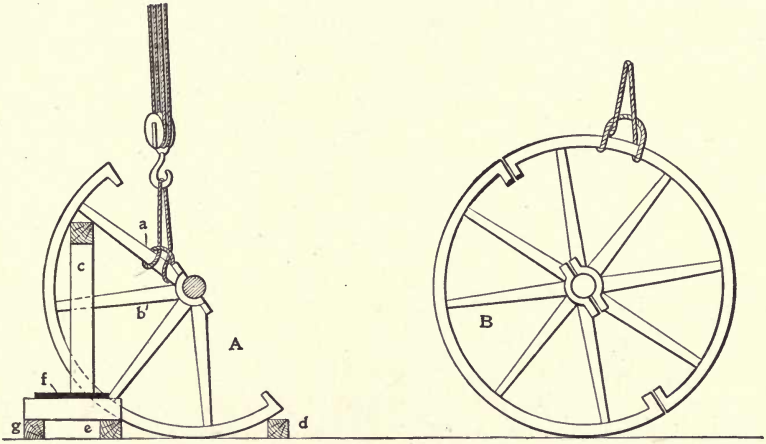

FIG. 128.—PUTTING ON A SPLIT PULLEY.

First, make a hitch on the half of the pulley which carries the keyseat, and hoist away until the pulley is in the position shown by sketch A, Fig. 128. The hitch is made around one of the arms in order that the split line of the pulley may stand at about 60 degrees with the floor line, as shown. If in doubt about one of the arms being strong enough for a hitch, put one end of a rope sling around arm *a,* the other end of the sling around arm *b,* taking care to arrange the pull on opposite sides of the arms so that the edges of the pulley will hang vertical.

When almost in place, lay in the key or feather and block at *d,* then take another pull on the hoist and block at *e*. Place another block at *g*, build across each side of the pulley to carry posts *c*, then drive double wedges on each side of the pulley at *f*, and the pulley-half is in place and will stay there when the tackle is removed. Next make a hitch on the remaining half of the pulley as shown by sketch B, Fig. 128, and swing the remaining half of the pulley into place. If the hitch is made at the right point, the pulley-half will go up at just the right angle to fit on the first half of the pulley. If this angle is not quite right, let the rim come together at one split—no matter whether upper or lower; then drop in a bolt and the rim can be lowered in place without the least danger of a slip. If the angle be so great that one of the regular rim bolts cannot be put in place, then slip a small bolt in temporarily. Almost anything will hold the slight strain until the pulley-half is fairly in place, when the regular bolts may be substituted for the temporary ones and screwed home for keeps.

TIGHTENING PULLEY BOLTS AND LINKS.

It is sometimes found that the bolts which hold together the halves of a split pulley cannot be made to stay tight. One or more of the nuts persist in working loose, no matter what may be done to them. When a case of this kind is met with, the matter may be settled for all time by heating the bolts before putting them in place and screwing them home while hot.

A red heat is not needed for this purpose. There is danger of breaking off the lugs or of cracking the rim if the bolts are heated too hot. A black heat is sufficient, and the bolts should all be put in place cold, or other bolts may be thus put in and screwed home; then they are removed one at a time, the heated bolts substituted and screwed home as fast as they are put in place. No waiting to give a turn on each nut in succession, in this case. Be sure that the pulley is well matched up where split, and held there by the temporary bolts; then put in the hot ones, one at a time, and screw them tight as quickly as possible.

When a pulley with a heavy rim is used, either as a belt wheel or as a balance wheel, it is often necessary to use links or dovetailed bars for fastening the split sections together more strongly than can be done with bolts. In cases of this kind, the links may be heated, then slipped in place and allowed to cool. The only trouble about this method comes when it is necessary to get the links out again—but as we are not bothering about that part of the business, the man who wants to get them out can drill holes in the links or do any other fancy stunt he pleases with them. If too loose, he can slip a bit of sheet iron inside the hot link, and it will be as tight as you please when it cools.

Putting on the Engine Belt.

While engine belts may be, and are, fastened in various ways, there is but one method which should be used when the best possible results are required, and that method is the cement splice. Put a first-class short lap leather belt on the engine and make the belt endless by splicing the ends together. When the belt stretches so much that it slips, then make a new splice, but the second one will run for five years without further attention except to keep the belt in proper condition by cleaning and oiling it as required by the service the belt must give.

Never attempt to "run-on" an engine belt. No belt over 8 inches wide should ever be placed upon its pulleys by running the belt over the edge of a pulley after the belt has been fastened together to its proper length. Use a set of good belt clamps and be sure to get a set which will not slip. If forced to use clamps which slip, never nail on a bit of a cleat to stop the slip. Instead of this outrageous proceeding, do as described on page 255, chapter XIII. Belt clamps are now made with malleable ribbed jaws so braced that they will not yield in the middle of the belt. The screws are also cross-connected so both nuts may be turned at the same time by means of a crank. Several clamps should be secured so as not to have to put together large and small belts with the same clamp.

The Governor Belt.

The governor belt, though very narrow, is fully as important as the engine belt, and it should be put together with a cement splice also. No engine will run as steady and regulate as closely with a rough, uneven, lumpy regulator belt as it will with a belt which is endless, smooth and straight.

The millwright may easily demonstrate this matter to his satisfaction and to that of his employer. All that is necessary is to attach a light wooden pointer to the governing device of the engine, as represented by *a*, Fig. 129. The pointer is fulcrumed at *b*, and wood enough to balance the weight of arm *a* is left, as shown to the left of fulcrum *b*. A light link is used for attaching the pointer at *c* to the moving sleeve of the engine governor. The radius *b c* is made as short as possible and have *c* travel with the regulator sleeve.

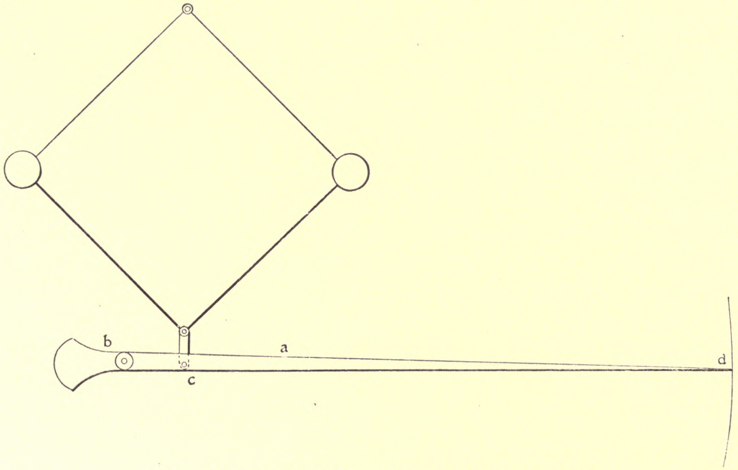

FIG. 129.—TESTING A GOVERNOR BELT.

When the engine is up to speed, the manner in which point *d* dances around every time an inequality of the belt passes the governor pulley will be a revelation to the man who has never tried this interesting experiment. Try it with an endless, smooth belt, then with a crooked, patched-up belt with lace leather bunches in one or more places, and it is safe to say that you will never use anything except the best governor belt obtainable, and cemented together, at that.

RUNNING "OVER" OR "UNDER."

It used to be the desire of every engineer to have an engine run "over," or "forward." Nowadays there is little attention paid to the direction in which an engine is to run as they are constructed to run equally well in either direction, and the crosshead wear is about the same, no matter which way the engine runs.

There is, however, one point in connection with this matter which the millwright should not lose sight of, and that is, shall the engine be belted "forward" or "backward?" In other words, is the belt to lead away from the wheel into space, or is the belt to extend backward past the cylinder?

The difference here is not in the manner in which the engine will run with the belt in either direction, but it is in the change of construction made necessary in some cases when the engine is to be belted "backward." The reason for this is, that some engines, particularly those of the corliss type, are so designed that when the engine is to be belted backward the shaft must be increased a foot or more in length in order that the belt may not interfere with things at the cylinder. Thus it stands the millwright to look out for this matter when he is considering the resetting or re-location of an engine, or of obtaining a new one to fit into a certain position.

Water Separator and Cylinder Lubricator.

Every steam engine, no matter how large or how small, should be fitted with a separator in the pipe, close to and on the boiler side of the throttle valve. Water is sure to come over in greater or less quantity with the steam, and a good separator will prevent such entrained water from passing into the engine cylinder to the possible damage or destruction of that useful portion of the engine.

Every separator must be fitted with a drip large enough to carry away all the water which comes along, and the drip should be connected into a good trap which will get rid of the water without wasting steam. Hand operation of a steam separator, by "bleeding" the appliance occasionally by hand, should never be depended upon. The "bleeding" is sure to be forgotten, and a separator full of water is worse than no separator at all.

The cylinder lubricator should always be selected from the double sight feed types, giving a sight of the oil as it passes to the cylinder, also a sight of the condensed water, in another feed glass, as it passes into the oil reservoir to displace an equal volume of the lubricant. When connecting up a sight feed lubricator for the cylinder, do not make the mistake of using too short a pipe in which steam may condense to feed the lubricator. Do not tap in the pipe in question below the separator. Tap it in above that appliance if you want to, and get plenty of condensing steam length. And never make the mistake of connecting the lubricator to the steam pipe on both sides of the throttle valve. It will not work well if you try it.

When attaching a single pipe lubricator, it is necessary to attach it below the separator, but the connecting pipe should be a large one and as long as possible. There *must* be sufficient condensing area, or the best of lubricators will not work. On large engines, do not trust to one lubricator. Put on a force feed lubricator in addition to the automatic appliance and the engine will be safe no matter how completely the automatic lubricator may "go bad."

Exhaust and Drip Pipes, and Heater.

Every exhaust pipe from the engine room should go to the heater—that is, if there is ever any steam to escape through the pipes in question—and there should be adequate drip pipes from either end of the cylinder and from the steam pipe just above the throttle. These three drips should unite in a single pipe which may enter the exhaust pipe, but the angles in all these drips should be made of tees instead of elbows, with the extra opening plugged. This makes a very convenient way of getting into the drip pipes in case of stoppage therein.

The exhaust pipe from engine, also from any pump, should have an opening in the lowest point of such pipe through which water may find its way direct to sewer or other waste outlet. A 1-inch hole tapped into the elbow where the engine exhaust pipe makes its upward turn to the heater, is a most excellent way of getting rid of condensed water in the exhaust pipe but never make the mistake of fitting a valve to the hole in question which should remain open at all times, and closing of it should not be possible. In a similar manner, there should be left an unclosable opening or drip from the bottom portion of the exhaust steam space in the heater. If back pressure is to be carried in the exhaust pipe, these openings may be water-trapped to equal the back pressure carried, but no valves should ever be placed on any of these openings.

The heater should be selected with a guaranteed heating surface of one-third square foot to each horse-power of rated capacity. Heaters with only one-fourth square foot to the horse-power are not desirable. The matter of open or closed heaters must be settled by the designer of the steam plant. Personally, the author favors the closed type, in order, for one reason, to be able to feed with an injector through the heater when necessary, something not possible with the open types of feed water heaters.

CHAPTER XVIII.

STEAM BOILER SETTING.

The efficiency of a power plant depends a good deal upon the boiler, not only upon its efficiency as a steam generator, but upon the location and manner in which it is erected. A boiler may be so set that a great deal of heat is lost in the setting through air inlets, cramped passages and poor heat circulation, if that term may be allowed. In addition, there may be serious losses due to improper location of the boilers. It may cost too much to convey steam or power to the points of consumption, or the method of getting fuel to the boilers is a costly one. Again, the matter of removing ashes is difficult, or the boiler may be so located that repairs become a serious matter, even aside from the cost of similar repairs to other boilers. And when new boilers must be put in, the cost of removing the old ones and substituting new becomes as great or even greater than the original cost of the boilers when new.

LOCATING THE BOILER.

Boiler location is one of the first things which should be done when a plant is projected. It should proceed closely with the location of the engine and the other machinery in the mill. In fact, the location of the power plant is one of the most vexatious problems of factory design. A balance must be struck between the cost of handling steam and the transmission of power; the matter of other steam consumption becomes a factor, such as heating the buildings, drying, boiling, and other chemical and mechanical operations. Add to all this the problems outlined in the preceding paragraph and it will be seen that the location of a steam boiler is no small job, neither is it an easy one. The electric motor has solved the problem, as it permits the boiler to be put anywhere.

EXCAVATING FOR BOILER FOUNDATION.

Usually it is not necessary to excavate very deep for a boiler foundation. A trench a foot or so in depth, following the outline of the walls and across where the bridge wall is to go, will be sufficient in most cases. The side walls, including the air space, are about 30 inches, and the rear wall, 28 inches. The bridge wall is about the same thickness, and the front wall may be 9 inches for a half arch front, or 16 to 18 inches for a full flush front boiler.

The trench filled with loose stones to the level of the ground is all the foundation that will be necessary in most cases, and concrete for steam boilers seems hardly necessary except in cases where the nature of the soil demands a concrete foundation. When a large number of boilers are to be set in battery, and the posts of the building are scattered among the boiler foundations, it may be necessary to put in heavy boiler foundations; but when but one or at the most two boilers are to be set, the loose stone filling will almost always prove all that is necessary.

STARTING THE BRICKWORK.

When setting plans are to be used, and that method of boiler setting is far preferable and should always be followed if possible, the boiler setting should be laid out the same as any other machine foundation, squared with the building line, and the excavation laid out in the usual way. But when plans have not been furnished, then let the millwright and the mason get their heads together and make a sketch of the layout, as shown by Fig. 130; then lay out the setting, excavate and fill the hole, leaving a depression or pocket where the ash-pit will come, which should be cemented water-tight to form a shallow pit in which water may be kept to the depth of several inches when the boiler is in operation. When an ash-pit is thus prepared, and ashes are never allowed to collect above the surface of the water, the burning out of grate bars will be something almost unheard of. It is the radiation of heat from a pile of ash and clinker, close beneath the grate, which causes the bars to burn out so frequently. Keep water in the pit at all times and the surface of the liquid will always be below 212 degrees, no matter how fierce a fire is carried on the grate.

Spread a couple of inches of mortar over the loose stones where the brickwork is to be started, but before this is done, roll the boiler in place and block it securely in the exact position it is to occupy when set. Build the supporting cribwork of short blocks, and use only those small enough to be passed easily out of the ash-pit doors and the cleaning door in the back combustion chamber. A long block or a large one is a nuisance which should never be tolerated or used in blocking under a boiler which is to be set.

Before starting the brickwork, locate the buckstays and place the lower tie rods in position. Some masons omit the lower tie rods and set the ends of the stays in the ground and cement around them, but the tie rod is much to be preferred and should be used whenever possible.

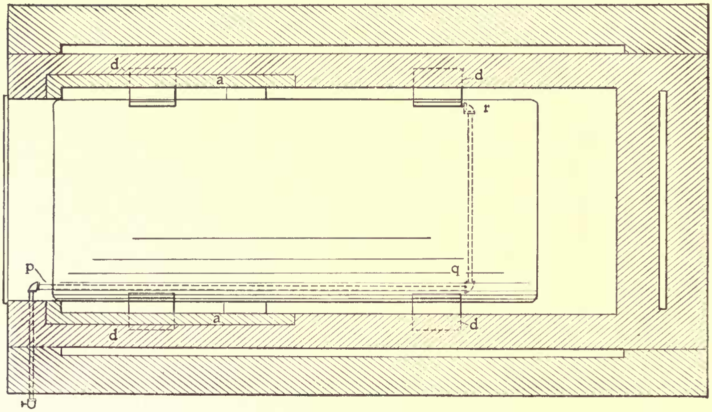

FIG. 130.—PLAN FOR SETTING A HORIZONTAL TUBULAR BOILER.

It is not necessary to use cement mortar even in the lower courses of brickwork of a boiler setting. Common lime mortar is plenty good enough, and cheaper than cement. Start the walls as close to measurement as possible and build them solid a few inches high. Then start the air space between the inner and the outer wall, and from the start to the finish see to it that no header is tied into both walls across the air space. Frequent headers should be put in one wall to barely touch the other wall, but any header must *not* be built into both walls.

FIRE-BRICK FURNACE LINING.

The furnace must be lined with good fire-brick independent of the walls of the boiler setting, as shown by Fig. 130 at *a, a,* also at *b,* Fig. 131, and at *c, c,* Fig. 132, which also shows the method of tying the fire-brick wall into the other brickwork. Build the common and fire-brickwork in such a manner that the latter can be easily removed and replaced with new bricks, and there will be no trouble in getting that part of the setting just about right.

The proper manner of locating the bridge wall and the grates is clearly shown by Fig. 131, the grate pitching a little toward the rear end, thus making firing much easier. The bridge wall is a subject of much difference of opinion among power plant men, some claiming that it should be built to a circle a few inches from the boiler shell in order to "force the flame against the shell." A man is welcome to this opinion if he wants it—the author does not care for it—and the bridge wall should be regarded as merely for the purpose of preventing coal and ashes from being pushed off the back end of the grate. That is all the bridge wall is good for, and it should be no higher than will serve that purpose, consequently the top of the bridge wall should be straight and flat.

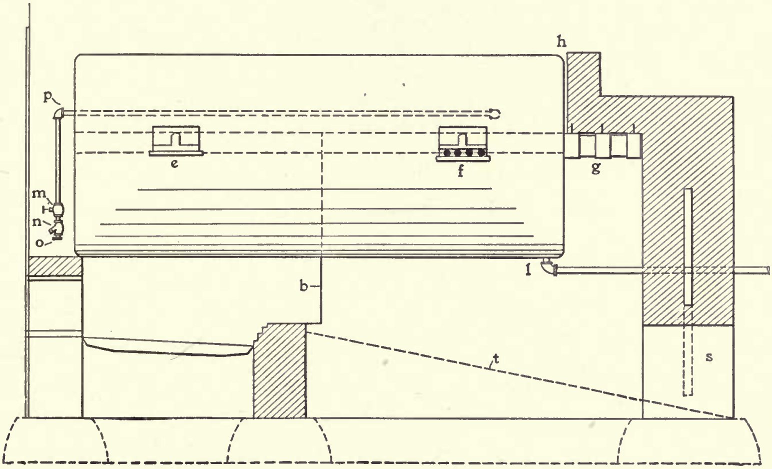

FIG. 131.—SIDE ELEVATION OF HORIZONTAL BOILER SETTING.

Lugs for Supporting the Boiler.

The disposition of the four lugs which support the boiler is plainly shown at *d, d, d, d,* Fig. 130, also at *e, f,* Fig. 131. These lugs should be riveted to the boiler shell upon a cross-center line directly through the middle of the boiler. There is a rule for determining the distance of the lugs from each end of the boiler in order that equal weight may come upon each pair of lugs with the least strain upon the shell, i.e., so that the cantilever effect of the overhanging ends may balance the central portion of the boiler between the lugs, to a certain degree. But this concerns the boiler maker more than it does the millwright.

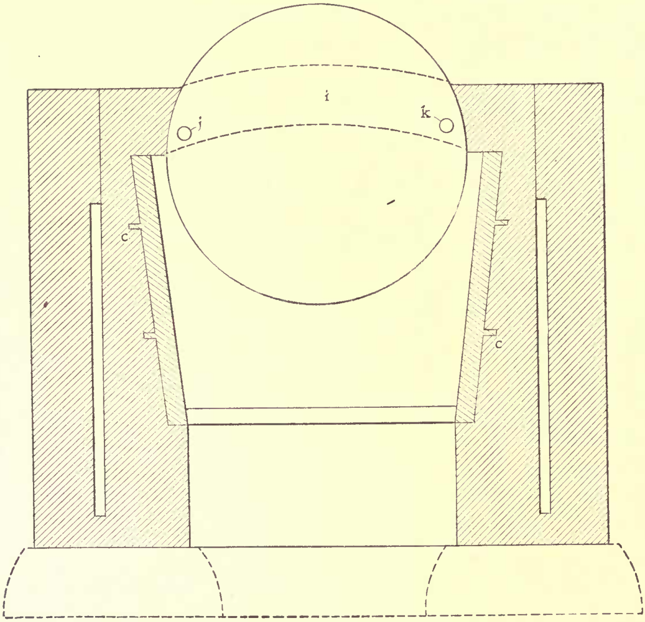

FIG. 132.—SECTIONAL END VIEW OF HORIZONTAL BOILER SETTING.

The lug *e,* the one at the front end of the boiler, or the pair of lugs at that end, should be set solid upon a cast-iron plate, which in turn is solidly supported by the wall. There should be no possibility of slipping or sliding with this pair of plates. The pair of plates at the rear end of boiler, one of which is shown at *f,* Fig. 131, should have four or more rolls interposed between lug and plate. These rolls should be at least one inch in diameter, straight and round, and they should be placed with great care so as to be each parallel with the other, and square with the length of the boiler. Should any of the rolls be placed cornerwise, it is evident that the boiler must slide over them instead of rolling easily back and forth as the shell expands and contracts.

The author has seen boilers set with the rolls placed lengthwise with the boiler, and many more boilers may be found with no rolls at all. And some are to be found with no plates between brickwork and the lugs. The behavior of the boiler and its walls under such conditions may well be imagined.

THE BACK ARCH.

The back or rear arch is shown at *g*, Fig. 131, and the manner of its support upon three curved T-irons is also apparent, particularly upon reference to the dotted lines *i*, Fig. 132. It will be noted that the "spring" of the arch (the beginning) is on the line of the supporting lugs, which is also at the center of the boiler. The top of the inside of the arch is just even with the water level which is assumed to be carried in the boiler.

Extra care should be taken at the end of the back arch, *h*, Fig. 131, to make sure that no portion of the brickwork touches the boiler. There must be room for expansion between the rear end of shell and the arch, therefore it is very necessary to leave a space clear and clean between the brick and the boiler. Mortar or dirt, falling into this space, causes trouble, and it is well to run up the arch even with the circle of the boiler and at least 1 inch distant therefrom, then lap a course of brick onto the shell a couple of inches. The shell can slide underneath this course of brickwork, which will prevent anything from falling into *g* and blocking against the free expansion of the boiler shell.

The rear wall is much heavier than the front wall, and should the boiler be blocked solid at *g*, the expansion of the shell will be very apt to slide the boiler bodily forward, tearing out the entire front masonry and cracking the setting in a hundred places. This is apt to be the case when the boiler-supporting lugs are made in two pieces, one riveted to the shell, the other piece slipped over a dovetail projection on the first piece. This makes it very convenient to roll the boiler around when unloading or getting it into place, but look out. If the slip casting is not a very tight fit on the riveted portion of the lug, then the boiler will slip through the lugs instead of rolling along on the rear plates, and if anything gets into space *g*, away will go the boiler.

The author has been caught once or twice in this manner, and will never erect one of the boilers with two-piece lugs on it without having the blacksmith make some thin wedges and drive them so tightly into the crack between the two parts of the head-end lugs that slipping there is an utter impossibility.

THE FEED PIPE.

Ways without number are possible for the arrangement of a feed pipe and its disposition inside the boiler. The author has found no better way than that known as "the Hartford," which is represented as entering the boiler through the front head just above the water line, being shown at *p*, Figs. 130 and 131. In the former engraving, the feed pipe is shown by dotted lines as entering at *p*, passing along the side of the boiler to a point *q*, about two or three feet from the rear head (as far as possible without getting tangled up among the rear-head braces), thence across the boiler to the other side at *r*. There, the pipe terminates in an elbow which is turned to look forward and to discharge horizontally between the shell of the boiler and the outside row of tubes. The pipe, however, lies just above the water line, in the steam space.

No perforated pipe is necessary. The water, if pumped in cold, becomes pretty well warmed during its passage through the pipe in the steam space, and as the discharge is in about the coolest part of the boiler, and so arranged that it touches neither tube or plate, there is little chance for the feed water to do damage of any kind. Fig. 132 shows two openings in the boiler, one at *j*, the other at *k*. The feed pipe may be inserted through either of these openings, and the author in specifying boilers always provides for these openings, thus permitting the feed pipe to be let into the boiler on either side as proves most convenient. The hole not used is fitted with a plug.

THE BLOW-OFF PIPE.

Trouble with the blow-off pipe and cock has been experienced since boilers were invented. The connection shown at *l*, Fig. 131, is about the best which has been devised for connecting the blow-off. The boiler should be set with the rear end about 1 inch lower than the front end, then led out of the setting by the shortest possible route. Trouble has been experienced by the blow-off pipe burning off, and all manner of protecting devices have been devised and—found lacking. Heavy hydraulic pipe is sometimes used for the blow-off, but heavy pipe burns out fully as quick as ordinary pipe—probably because there is more of the thick pipe to burn—so the best way is to "let it burn" and put in a new piece of pipe as required, keeping careful watch, meanwhile, that the pipe is renewed before it becomes burned away sufficient to rupture and empty the boiler of water. That is a very disagreeable as well as dangerous accident, and it should be closely looked after and guarded against by frequent renewals of the blow-off pipe.

The blow-off valve or cock is another necessary nuisance around a boiler room. It cannot be dispensed with, hence it must be endured. Several improved forms of blow-off cocks are on the market and the only way is to get two or three of them and use one until it leaks, then remove it for grinding in again, and try another kind. After you have found the valve which suits conditions the best, keep three on hand all the time, and replace and regrind a valve as soon as it is found to leak.

The outer end of a blow-off pipe should *never* be concealed in a sewer or elsewhere that the attendant cannot see at all times if there be any leak through the blow-off valve. If it be necessary to discharge into a sewer or any other place where the end of the blow-off pipe will not be in sight, then arrange the blow-off pipe so there is a vertical length in the boiler room. Cut the vertical length, and insert a bolted union which is so arranged that it will separate at least ¾ inch when the bolts are removed. Always, after blowing down, remove the bolts; place a bit of tin between the union flanges, and if there be a leak, the water will run on the floor where it will be seen and indicate the condition of the blow-off valve.

CLEANING DOOR AND BACK COMBUSTION CHAMBER.

The cleaning door, *s*, Fig. 131, must not be forgotten. It may be located where convenient, either in the side walls or the back wall of the boiler, but wherever located, be sure that it is flush with the floor of the back combustion chamber. There is a considerable difference of opinion regarding the floor of this chamber, some preferring to leave it level with the ground, while others fill to dotted line *t,* and pave with brick. The author prefers to leave the chamber vacant to the floor line. There is more room for dust and ashes, and no man ever found that the floor at *t* effected more efficiency of operation.

Safety Valve and Steam Pipe Connections.

The safety valve should have an opening into the boiler for its own special accommodation. No other pipe should be connected to the safety valve opening. Sometimes the steam gage is connected by drilling a hole in the nipple which connects the safety valve with the boiler, but it is better to adhere strictly to the rule and put *nothing* into the safety valve opening except that valve. It is but little more trouble to tap directly into the boiler shell for the steam gage pipe, and it is better in every way.

There should be two necks on every boiler; one for the safety valve as above described, the other for the pipe connections. Pipe should be connected with the boiler through an angle expansion arrangement, as described on page 321, chapter XVI, and care should be taken that the strain caused by expansion is so distributed that it will be absorbed without causing strain beyond the elastic limit of the metal upon any flange, screw-thread or any fitting.

Stop and Check Valves.

Put a good stop valve in the main steam pipe as close to the boiler as possible. It is a good rule to put a valve in each and every pipe as close to the boiler as possible. Something may happen to the pipe or valves in the distribution lines, and a good valve, in perfect order, and located close to the boiler, may save life and property in case of accident or emergency.

The feed pipe should also have a stop valve in it as close to the boiler as convenient for working purposes. This valve, as indicated by *m*, Fig. 131, should in all cases be placed between the check valve *n* and the boiler. The reason is a very simple one. Things are continually happening to check valves, and without a stop valve between the check and the boiler, there would be no way of overhauling the check without drawing the fire and blowing down pressure in the boiler. Adjacent to the check, *n,* place a union *o,* for checks frequently have to be removed and then the union is in just the right place for that work.

A high-grade angle valve makes a good connection between the pipe and the boiler. Formerly, angle valves were open to distrust, but lately this class of valve has been so greatly improved that it is very desirable. It saves the cost of an elbow, and locates the stop valve just where it ought to be—close to the boiler. Angle valves are also very handy in the feed pipe. But be sure to get good heavy valves. Thin light ones are worthless and should never be purchased under any pretense whatever.

Grates and Doors.

The grate bars should be selected for the fuel they are to burn, and local conditions should govern entirely. A good shaking grate is desirable, and an automatic stoker is always profitable, even on small single boilers.

Every door—the fire doors, those of the ash-pit and the tube-front, and even the cleaning door—should be made to fit. Never put up a door which leaks. The air which enters around a poorly fitted door may lower the efficiency of the boiler many points. Therefore, when poorly fitting doors are found, fix them if possible before quitting them. If they are so bad that they cannot be fixed properly, then "bust 'em" and get some new doors. It will be money saved, even if the purchaser of the boiler must pay for the new doors.

The Stack and the Damper.

Modern tendency is toward the use of the steel stack in place of the costly chimney. If possible, arrange the stack to stand upon a foundation of its own. Even a 75-foot stack, erected on top of a boiler, exerts too much strain upon the brickwork of the boiler, especially during high winds. The front wall of a boiler setting is always the weakest part of the setting, on account of the large opening necessary for cleaning the tubes, this opening being covered by the cast-iron front, but leaving a very weak foundation for a superimposed stack. If a stack must be used, see that the stack plate is ample to give a good bearing upon the brickwork.

See that the stack is well supported by numerous guy cables. If it be not looked after, when the stack is obtained upon contract, the guy cables sent will resemble clothes lines more than stack guys, and heavier cables must be procured. Wire rope only 1/4 inch in diameter is too light for guying boiler stacks.

Stacks obtained from some manufacturers are made of mere sheet iron instead of tank steel. A stack No. 14 gage is hardly worth setting up. It is much better to pay a few dollars more for No. 10 gage plate and obtain a stack which will last five years at least. No. 8 is none too heavy for a stack which is to last a long time without repairs.

Always specify that a damper be placed in the stack, or in the uptake to each boiler. When two or more boilers are set in battery, there should be a separate damper to each boiler and another damper in the stack or main smoke flue, and this damper should be connected to a good damper regulator which is actuated by steam or water pressure, and which is controlled by the steam pressure in the boilers. It will pay to add a damper regulator, actuated by outside energy, to the smallest steam boiler which may be erected for economical use.

Boiler Feeding Appliances.

The belt-driven pump is the cheapest boiler feeder, the duplex steam pump the more costly. The injector has the least efficiency, when regarded as a pump, of all water forcing appliances, but as the heat efficiency of the injector is nearly 100 per cent., that quantity is sufficient to offset the low pump efficiency and to place the injector on the list as a good emergency feeder. The centrifugal pump is about to enter the boiler feeding field. This pump is being made in a form known as the "multi-stage," and a number of pumps on the same shaft work the same water, one after the other, thus obtaining any required amount of pressure without any given rotor having to work against more than 40 to 60 pounds pressure.

The millwright should secure a good back-geared belt-driven power pump and feed the boilers with it. If electric transmission is employed in the factory, put in an electrically driven feed pump and, if possible, obtain outside "emergency current" which can be used at any time by merely operating a double-throw switch to feed the boilers when the factory engine is not running.

Connecting the Injector and the Pumps.

When setting up a steam pump, place that appliance in the middle of a room where you can get all around it. A pump is often put into a corner where it cannot be gotten at without standing on one's head and then working in the dark. Build up a pier at least 30 inches high, and place the pump on top of it. It is foolish to put a little pump down in the dirt and then break your back in stooping down to get at it. Put the pump up, put it in the middle of the room, and your pump troubles are all gone forever.

Hang the injector from the ceiling or from an overhead timber. Never put it against the wall or in a corner where you can't see or get at the thing. Hang it up in full view where you can get a wrench upon any part of it without skinning knuckles or jamming fingers. Put a valve and a union in every pipe leading to pump or injector, then you can disconnect any fitting you wish without having steam or water blowing through, and without the exhaust backing up to take a fellow in the rear.

Likewise, put the belted pump where you can find it when packing is necessary. There is plenty of room out of that corner for the power pump. Put it in the open, and spend many a happy hour kicking because you did not do so before. Put a by-pass connection around the power pump so that it (the pump) may be run all the time, and any required quantity of water, up to the pump capacity, may be turned into the boiler in a continuous stream.

In a large plant, everything should be cross-connected. The pumps should be so piped that they can be made to force water in any line of pipe in the mill by setting certain valves. The injector shall likewise be cross-connected to deliver to boiler, to tank, or to other desired points.

The steam and water shall also be cross-connected, so that steam may be admitted to certain water pipes, and water to certain steam pipes when necessary. This applies to the connection for blowing boiler tubes with a hose connection. When cleaning up a boiler, it is sometimes very handy to be able to turn water pressure into the steam connection, also to turn either water or steam into the ashpit. There should be two or more sources of water supply, and cross-connecting these sources should always be done.

In large plants, a system of cross-connecting the piping as above described should be carefully designed and carried out, but in a small plant, much cross-connecting is apt to lead to confusion, hence the piping should be made as "fool-proof" as possible, and that means that there should be only one way of doing anything, and that one way should be so obvious that it will hit the attendant between the eyes if he fails to see it first!

THE AUTOMATIC BOILER FEED.

In certain kinds of manufacturing, where much steam is used outside the engine, an automatic boiler feeding device may be used to advantage. This device consists of a receiver into which flows the several drips which are to be returned to the boiler. A float valve in the receiver controls the steam supply of a feed pump mounted upon the receiver and as fast as the water collects in the receiver is automatically returned to the boiler. By arranging a receiver as above, and attaching the float valve to operate the by-pass valve instead of a steam pump supply valve, the water will be returned automatically to the boiler by means of the power feed pump, at a much less cost than when the steam pump is used.

HIGH DUTY BOILER FEED PUMPS.

The "duty" of any pump is the number of foot pounds of work done by the pump for each 100 pounds of coal burned. The new unit, as proposed, is the work done by one million heat units furnished by the boiler. This rating is the most just, as it cuts out the variation due to the different values of coal and also eliminates boiler efficiency, thus putting only the efficiency of the pump into consideration.

While the average duplex boiler feed pump has a duty of only about 15,000,000 foot-pounds to 100 pounds of coal burned, the engine driven pump has a duty of 100,000,000 to 140,000,000, and the steam pumps found in ordinary steam boiler feeding have a duty of only 4,000,000 to 8,000,000 pounds. The injector has a duty ranging from 161,000 to 2,752,000. While the duty of large pumping engines is high, the duty of small steam pumps can never be large, therefore, there are no high duty boiler feed pumps in small sizes, except those driven from large engines, the duty of the pump being that of the engine driving it.

STEAM TRAPS.

Every drip or outlet designed to permit water to escape without the loss of steam should be provided with a trap which is adjusted to the pressure of steam to be carried. Traps may be roughly divided into two classes—those in which the weight of the water actuates the discharge valve, and those in which valve control is affected by expansion and contraction of metals under varying temperatures.

The gravity traps need adjustment of valve opening and weight of float or kettle to fit them to work against different pressures; hence, when ordering traps, the pressure should be stated. Otherwise, the millwright must change the diameter of the steam opening, or weight the kettle in order to make the trap work at the pressure carried.

COAL AND ASH HANDLING.

As stated on page 344 of this chapter, the question of fuel and ashes should be considered when locating the boiler; yet, no matter how well placed the plant may be, there should be provided adequate means for handling coal and for removing the ashes. Various conditions require vastly different methods, but there are very few plants where the conveyor-elevator cannot be profitably installed for bringing in coal and carrying out ashes, the same apparatus serving both operations, and permitting the coal storage and ash dump to be located at will, either on the ground adjacent to, or removed from the building, or overhead in, or outside the boiler house.

The first cost of an installation of this kind is comparatively low, and once installed it will run for years with little cost for repairs or renewal. Therefore, apparatus of this kind should always be considered in connection with a steam plant, no matter whether for 100, or for 100,000 horse-power!

CHAPTER XIX.

SOME SHOP WORK.

The millwright must be, and usually is, prepared for any job which comes along, and to be confronted with a job of roll making is nothing but what might be expected. In some mills, paper manufactories for instance, rolls are used extensively in lengths from 18 inches to 10 feet, and from 2 to 15 inches in diameter. The larger sizes, of course, are made in the machine shop and are straight machine work. But there are many small rolls to be made of wood, and it will be assumed that the millwright is "up against" two sets of rolls like *A* and *B*, Fig. 133.

MAKING WOODEN ROLLS.

The roll *a* has a turned shaft passing clear through it from one end to the other. In fact, the shafts were pieces cut from cold-rolled shafting, 1 inch in diameter. The wood for the rolls was made from sapling pine, the round trunks being cut into lengths as required and worked while green. These rolls were about 18 inches long and 6 inches in diameter. They were bored green as stated, then driven on the shafts and allowed to season before they were turned. There was no lathe available for this job, hence the necessity for avoiding lathework altogether.

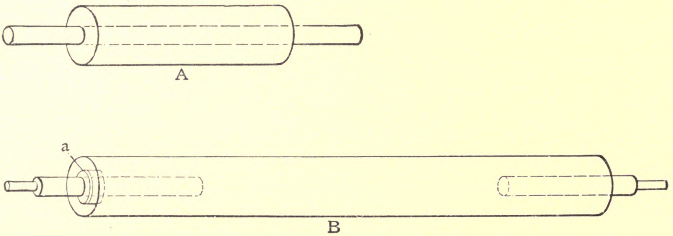

FIG. 133.—MAKING WOODEN ROLLS.

The boring was done with a single lip auger bit with the worm filed off to prevent its following the grain. To guide the auger, and center and hold the blocks, the rig shown by Fig. 134 was devised. The bit was welded to a long shank, "ship auger" style, and it was mounted in two guides as shown, both guides being split to permit the taking up of wear, should the auger cut out its guiding hole too much. These guides, *a* and *b,* were bolted rigidly to the frame upon which the rig was mounted. The guides were lined up so the auger would lie parallel with the frame, then the centering clamps *c* and *d* were put in place as shown, the planks of which they are composed being slotted as shown, to permit a limited movement crosswise the frame.

The guides were lined up with the centering clamps which were cut off flush with the outside of the frame when they were central with a 6-inch roll clamped between them. Thus, to center a roll blank, it is only necessary to put it in place between the centering clamps as shown at *g,* and adjust clamps *c f,* and *d e,* until each projects the same distance outside the frame timbers *i* and *j.* This simple adjustment centers the roll bolt both vertically and horizontally, and it is only necessary to go ahead with the rigidly guided auger.

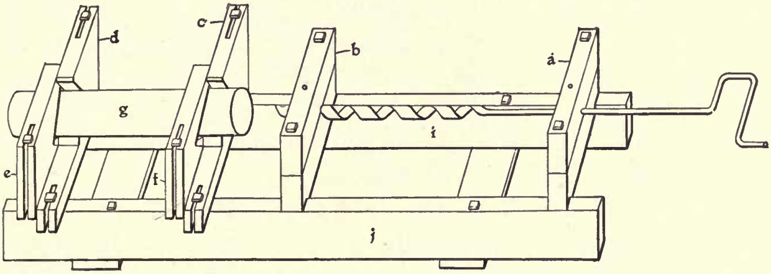

FIG. 134.—RIG FOR BORING ROLLS.

The shafts being 1 inch in diameter, and the auger being nominally 1 inch in diameter, the holes proved nearly a drive fit for each shaft. After the shafts were driven home, the rolls were laid away to dry, the shrinkage of the wood serving to clamp itself very tightly against the shaft. The moisture and acid in the wood attacked the steel shafts and very quickly rusted the metal surface. This served to increase the adhesion between roll and shaft, and not one of them ever came loose as long as they were under the observation of the author.

Trouble was met with in boring a few of the holes, for the auger evidently struck a wind shake or some other imperfection, and the hole was found to be crooked after withdrawing the auger. After the shafts had all been driven, and the rolls had dried, it was found upon getting them ready to turn, that the shafts had been badly sprung in some of the rolls—probably those in the crooked holes. Such shafts as were found not to be straight were driven out and the holes burned out until the shafts would go in and stay straight. This, of course, left the holes much larger than the shafts in some places and brimstone was melted and poured into each end of the rolls that needed this treatment.

Turning Rolls Without a Lathe.

To turn these rolls to shape and size, a couple of bearings were rigged up to fit the roll shafts. One of the smoothest rolls was mounted in another pair of bearings, end-on to the roll to be turned. The smooth roll was belted to a pulley which gave about the speed necessary for turning the rolls. The bearings were set up underneath the pulley which chanced to give the proper speed. As there was no way of stopping this improvised lathe spindle, without throwing off the belt, means had to be provided for making a "quick change" from one roll to another.

To provide means for stopping and starting the roll being turned, a pin was fitted into a collar so as to project 1/8 inch from one end of the collar at right angles to the set-screw and parallel to the shaft. This collar was placed on the overhang of the shaft in the belted roll, the pin being placed outermost. A similar collar was placed on the end of the shaft in the roll to be turned, and after that shaft had been made up in its bearings to run without vibration, a push endwise on the shaft of 1/4 inch caused the two pins to engage and the roll was ready for turning. A pull would cause the work roll to stop at any time for examination or for removal, the live "spindle" running all the time.

Making Long Rolls.

Making short rolls, as shown at *A*, Fig. 133, is an entirely different proposition from making the roll shown at *B*. This roll is of considerable length, and the use of a lathe is required in its making. It will be noted that this roll has shouldered gudgeons, also that a ring is driven into each end of the roll to prevent the splitting of the wood. The first step is the preparing of the gudgeons, which are merely pieces of round steel 18 inches to 2 feet long, and vary in diameter from 1 to 1½ inches according to the size and length of the roll. The gudgeons are simply cut off and "pointed" a little at the ends with a hammer while cold, to reduce the bur caused by cutting off.

The wooden portion is usually dry timber large enough to turn to the required diameter. Dry timber must be used for this job as green stuff is not desirable at all. Cut the timber square, to about ⅛ inch longer than the roll is to finish. The gudgeon holes may be bored by chucking the bit and blocking up until a timber lays central with the bit; then feed it to the bit by means of the slide rest which may be brought up behind the timber as it lays on its blocking.

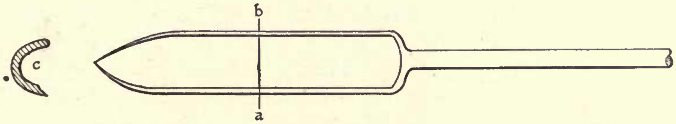

FIG. 135.—"POD" AUGER FOR ROLL BORING.

On one large roll job, the author rigged a wood-lathe center on the slide rest, and in bringing the rest up against the roll the center was forced into the intersection of diagonals on the end of the roll timber, thus centering that end without the trouble of juggling blockings at that end of the work. "Pod" bits were found best adapted for the work of boring rolls in the lathe, and a set of the necessary sizes were kept for that purpose. Fig 135 illustrates this tool; a section through *a b* is shown at *c*. A clean straight hole can be bored with a well made tool of this kind.

BORING STRAIGHT HOLES.

When rolls must be bored by hand, and whenever straight holes are required in other instances, the arrangement shown by Fig. 136 will enable a careful workman to bore long holes very close to a given direction.

The timber in the picture represents one of the rolls which is to be bored for a gudgeon. Fasten in place the two straight-edges *a* and *b* by means of a couple of nails in each, taking care to place both strips exactly fair with the center lines shown across the end of the stick, also to fasten each straight-edge exactly parallel with the timber. The man who is boring has his eye somewhere near *d,* and while starting the auger, he will keep it in line with the center-side of straight-edge *b,* thus forcing the auger to lie parallel with the vertical center of the roll-timber.

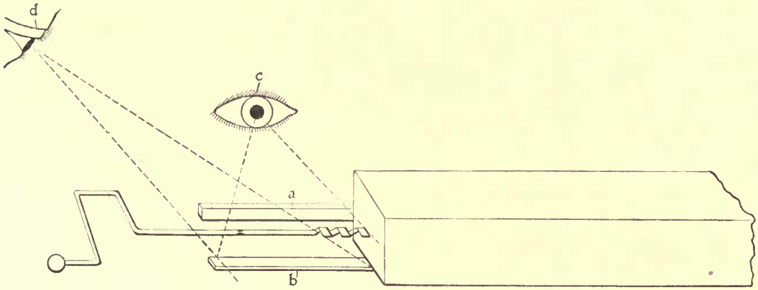

FIG. 136.—METHOD OF STRAIGHT HAND-BORING.

While starting the auger, let another man place an eye at *c,* and sight the auger horizontally across straight-edge *a.* This alines the auger vertically to the horizontal center plane of the timber, and if these two sightings are kept up until the auger has fairly started, there will be little danger but that the hole will be accurately located and bored.

Inserting Roll-Gudgeons.

The gudgeons are simply driven into the holes without anything further being done to them, but for rolls which are to be subjected to considerable strain, a split-ring should be driven into each end of the roll as shown by Fig. 133, at *a.* A detail of the ring is shown by Fig. 137, the complete ring being represented at *a,* a section at *b.* In making this ring, a piece of thin flat iron —or steel is flatted to a feather edge on one side only, as shown at *b.*

The ring should be welded up to a diameter about half way between that of the gudgeon and the finished roll. This is for the purpose of preventing any splitting action on the part of the ring when it is driven into the timber. With the wedge side inward, the wood is drawn closer against the gudgeon; whereas if it were made up the other side out, the ring would act as a wedge to split the timber.

Drive the ring home either with sledge and flatter, or by upending the timber upon a smooth solid surface and using the timber as a ram for driving home the ring. As soon as the rings have been driven, drive the gudgeons; then place the roll between two surfaces which will catch the two gudgeons, and revolve the roll to see if the gudgeons are central.

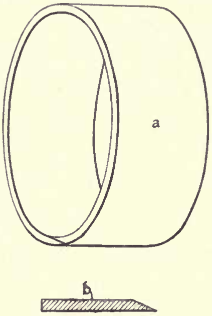

FIG. 137.—SPLIT-RING FOR ROLL-END.

Frequently it will be found that one or more of them has followed a crooked hole and will not run true enough to finish up when it is to be turned. To cure this, rest the gudgeon on a solid corner, close to the end of the roll-timber. Turn the gudgeon so that the eccentricty of the end of the gudgeon is uppermost, and have a man strike with a sledge on the end of the gudgeon which is easily bent in this manner until it runs approximately true and will "clean-up" when placed in the lathe.

Finishing the Rolls.

Having been ringed and gudgeoned as above, the rolls are ready for the lathe, and the gudgeons should be centered in the usual manner, squared up, and then the roll should be turned to size before the gudgeons are shouldered down. The filing and polishing of small journals is not apt to be improved by the fast revolving of a mass of ragged wood on the roll; therefore clean up the roll and then turn the shoulders in the gudgeons and a better job will be obtained.

Lagging Pulleys to Increase Their Diameter.

Changes in a mill frequently require a pulley to be increased a couple of inches in diameter in order to increase the output of a machine or a group of machines. It frequently happens that a pulley can be lagged a couple of inches—or even five or six inches—quicker and cheaper than it can be replaced by another pulley. This is particularly the case with wooden pulleys, but even cast-iron or steel-rim pulleys may be lagged to advantage by drilling a couple of rows of holes around the rim circumference.

The drilling may be done in the most convenient manner possible, and even a breast drill-stock and a 5/16-inch drill will give a good account of itself if the workman cannot get hold of an electric drill which attaches to any electric light socket. That instrument is the one to drill small holes with, but drill them any way, only get them through. If nothing better is at hand, and a wrought steel rim must be drilled with a carpenter's brace and a bit-stock drill, then procure a center punch and grind it to a sharper bevel than usual. Place a solid piece of metal under the pulley-rim and obtain a solid bearing where the hole is to be made. Then drive in the center punch as far as it will go, put in the drill and give it a few turns. It will cut very quickly where the punch has driven the center. Alternate with punch and drill and a hole will be made before you are aware of it. Many a tough hole can be "worried" through in this manner.

Making Lag Patterns.

To lay out a lag pattern, procure a bit of thin stuff, ¼ to ½ inch thick (a shingle has done duty many a time) and tack it to floor or bench as shown at *a*, Fig. 138. With a trammel or a big pair of compasses draw a circle *c*, about the center *b*, with a diameter equal to that of the pulley to be lagged. Make the circle cut on to the board about 2½ inches, then draw the dotted line *b d*, making it dotted from center to circumference and drawing a full line from circumference across the board to *d*. Next, saw off the board at *e*, two or three inches from line *d*, and the pattern is complete, though the end of the pattern at *d* may be cut off leaving the distance from that end of the pattern to the circumference line a little more than the thickness of the lag which is to be made.

The completed pattern is shown at *f*. It is to be used as a set square for testing the dressing of the lags, one of which is shown in section at g, and it is to be planed or machined until it fits the pattern *f* on three sides. A completed lag is shown in section at *h*.

Nearly all the work on a set of lags may be done on a circular saw. The curve *i j k* may be worked out by running the lags at nearly a right angle across a large circular saw, the teeth of which project through the saw table the depth of the cut at *j*. A good deal of labor, and lumber also, may be saved by a little study of the large section of a lag shown at *i k m*. It will be noted that there is no use in dressing down *g* until pattern *f* fits all the way across, for at *i k* is shown all that can be used of the curve, the edges *k l* being cut off when the lag is jointed on the edge, the strip *k l m* going to waste; hence it is not necessary to fit the distance *k l*.

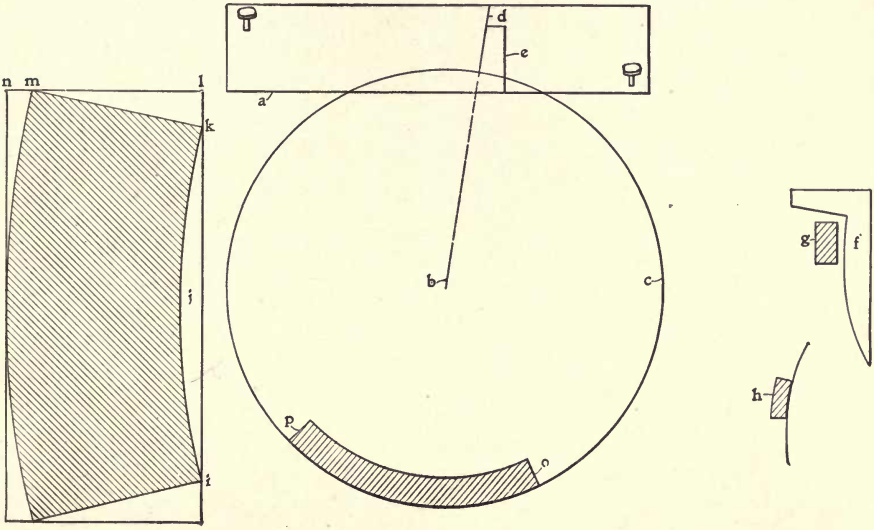

FIG. 138.—LAYING OUT A LAG PATTERN.

In the same manner, another saving of time and stock may be made by beveling only from *k* to *m*, leaving *m n* to be removed when the pulley is turned. By a careful use of the circular saw, lags may be gotten out so smoothly and so true to pattern that only a touch of the hand plane will be needed to make a fine fit. It makes no difference how wide or how narrow a lag may be across the face *i k*, for the edges are all radial when laid out by pattern *f*; hence any width of stock may be used which will give the necessary thickness of lag.

Building Wood Pulleys on Hubs and Flanges.

It was once almost an invariable rule that when a pulley was needed, a hub and flange would be cast and bored to fit the shaft, key-seated at the machine shop and then sent out to the millwright for the erection of a pulley of the required diameter and face, the hub and flange being used as a foundation. To do this, the pattern shown by the shaded segment *o p* would be carefully worked out and sent to the mill where lumber enough was jigged or band-sawn into segments to build up the necessary number of circles to give the desired width of pulley face.

One of the old-time flanges is represented at *A*, while a pulley in process of construction is shown at *B*, Fig. 139. Circles or disks of 7/8 or 1 inch dressed lumber are first gotten out to amount to a little less than one-third the width of pulley face. These circles are fitted to each other, glued and nailed as shown at *a* and *b*, sketch *B*. When the requisite thickness of web, as it is called, has been built up, the flange is bolted to the wooden web, and usually another thickness of stuff is broken around the outside of the flange, thus giving more bearing of the wood against the iron.

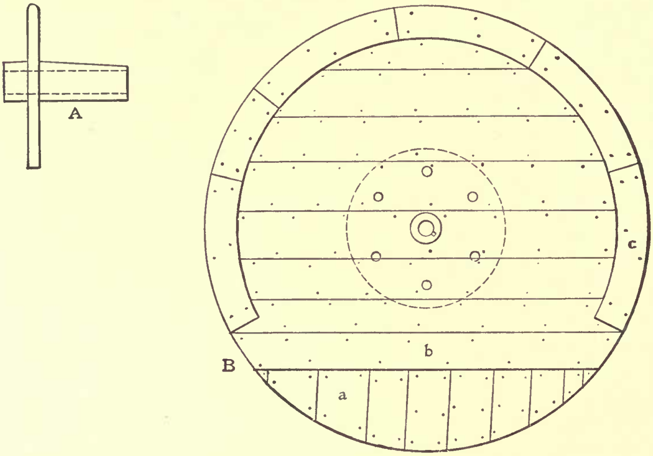

FIG. 139.—BUILDING A WOOD PULLEY ON A FLANGE.

As soon as the web has been completed, the segments *c* are fitted in place, nailed and glued, until the necessary width of face has been worked up. Then "set" every nail, mount the pulley on a shaft and turn the face, the edges of the face, and as much of the remainder as is necessary to make the needed finish. Beware of driving nails close to the face of the pulley, or you will surely hit some of them while doing the turning act. An excellent tool for roughly turning a large pulley is the tang of a large file, ground to a flat chisel-like point not over ⅛ inch wide. This will cut off more wood than a dozen chisels and it will not require one-tenth the amount of grinding that the chisels will call for.

PREPARING AND USING GLUE.

When gluing the circles and segments of the pulley, the closer together the wood is brought, the stronger will be the joint. If two pieces of wood be fitted together as closely as possible, then covered with a coating of glue and squeezed together in a press, the joint will be a much better one than when the pieces are merely laid together and fastened with nails or screws.

If the pieces are heated before they are placed together, or while in the press, the joint will be still better. Therefore, to make the best possible glue joint, the pieces should be heated, fitted and pressed as closely together as possible during the setting of the glue. It is, then, important that the surfaces be evenly coated with glue, and as thin glue spreads easier and more evenly than thick, the former should always be used. Thin glue is much more economical as less of it is used, but the joints must be good and the pieces placed closely in contact when thin glue is to be used. The botch workman can make a little better job with thick glue than with thin—a little better looking job, at least, but it will not be as strong a piece of work as if the parts had been properly fitted together.

HOT AND COLD GLUE.

There is no very good way of testing glue except by its physical appearance. Glue which has an even color and which breaks evenly with a tough, firm yet clean "snap" may be taken as a good glue, no matter what its color may be. It is well, however, to avoid glues which are too dark, as they may contain quantities of foreign matter which should have been removed by better filtering during the process of making the glue. Usually, the whiter the glue, the higher the price at which it is sold.

To prepare hot glue for use, place the required quantity of dry glue in a vessel and cover with cold water. It makes no difference how great a quantity of water is used for the glue will only absorb a certain amount. It is best to place the glue in the water at night; then the next morning pour off all the water except what has been absorbed by the glue, which should then be placed in the regular double glue pot and melted. Dry glue will absorb just the amount of cold water that is necessary for melting the glue with heat—quite a handy arrangement.

Glue will not dissolve in cold water, though it will soften, as shown above. To prepare a glue which will not turn into jelly after it has been heated and allowed to become cold again, add some acetic acid, and the property of gelatizing when cold becomes lost. Nitric acid may be used instead of acetic, if desired, so may hydrochloric (muriatic) acid. None of the adhesive strength is lost, and glue thus prepared, which is sold as "cold" glue, "prepared" glue, etc., may be used without heating if necessary, but better results can be obtained by heating the glue, likewise the articles to be glued, the same as when using ordinary, or "hot" glue.

Glue joints may be made waterproof by adding a little bichromate of potash to the glue before using, and then exposing the glued and dried joint to the action of sunlight, which acts upon the bichromate and renders the glue insoluble in water. But it won't work without sunlight.

Bits and Boring.

Compared with forty years ago, the millwright of today has a selection of bits and wood boring tools which would be regarded as little short of marvelous could they have been placed in the hands of the millwright of four decades ago. The auger bit, the center bit and the "spoon" bit constituted the woodboring tools at that time, and when the so-called "patent" auger was added, it seemed to the millwright that nothing further could be desired in the line of boring tools. But now the millwright can select a bit, or a whole set of bits, ranging by thirty-seconds of an inch from 1/4 to 1 1/4 inches, and increasing by larger fractions to 3 or even 4 inches in diameter. These bits may be procured in infinite variety, each designed for some particular operation, and almost perfection for the purpose for which it was designed.

There are the common auger bits with a lip or spur above the horizontal cutting lip, and a spur below that lip. These bits cut well and smoothly in soft wood, but they go awful hard in the more dense woods and are rendered almost useless when run against a nail. A bit of this kind is shown at *B,* Fig. 140, a lip *b* being found at opposite points, and a spur *a* being placed as shown. When the bit was new, a similar spur was to be found at *c,* but for repair work, for boring hard wood, and for boring end-wood, the spurs are filed off as shown at *c,* leaving lips *b* and *c* to do all the work of cutting the edge of the chip. After a bit has

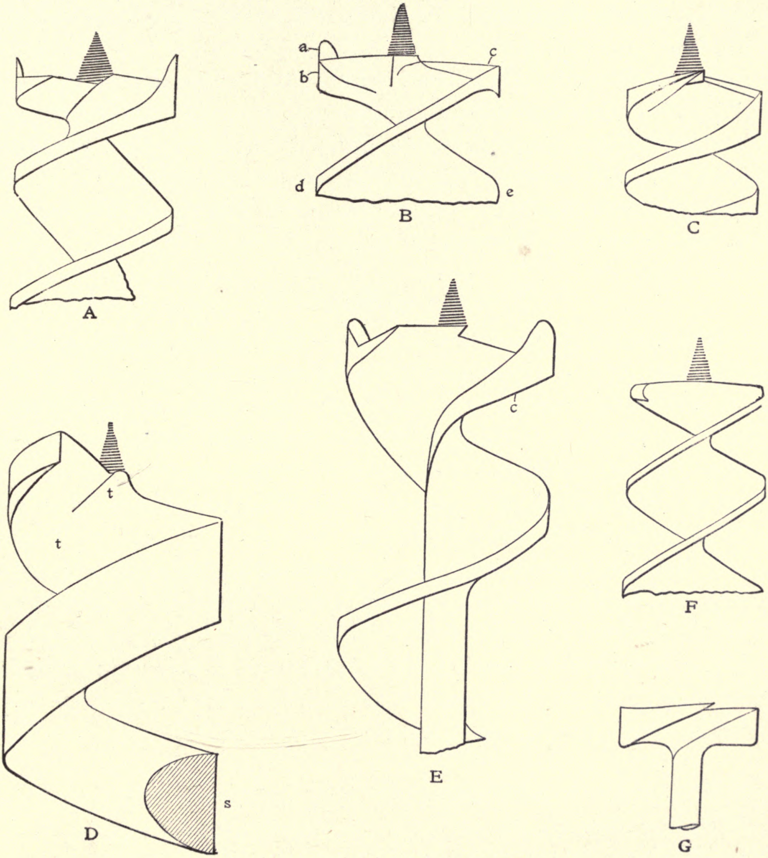

FIG. 140.—BITS AND BORING.

been used for a long time, the lips become very small, or are entirely removed as shown at *C*. A bit of this kind is utterly worthless for boring side-wood. It is, however, a first-class tool for boring into the end of a piece of hard wood and should be kept for that work. Remove the worm from this bit and it becomes a most excellent tool for machine-boring and end-wood—but it is not worth a "continental" for side work, either in hard or in soft woods.

Bit *A* shows a type of tool with no lip, the underneath spur doing all the work of edge-cutting the chip. This is a fine cutting bit but it requires a lot of power in hard wood, and soon becomes like *C* when abused by running against nails. This is a good bench tool and it will cut smooth holes, but the bit should not be put into general mill repair work.

Bits for Repair Work.

Bit *B*, without the spurs *a*, is the tool for repair and general mill work, and is the best all-around bit made. Tool *D*, however is *the* mill bit, and should be in the chest of every millwright. This is a single lip bit and it is the one known to the old school millwrights as the "patent" bit. It is the type almost universally used for ship and bridge work and it will stand more hard work and abuse than any other bit made.

It has a single lip, no spur, and the chip-removing spiral is made of very heavy half-round steel, as shown by the section *s*. This tool is heavy enough to stand straightening with a mallet when bent, and it can be welded to shanks of any length, or used with extensions or ship handles, as desired, without being spoiled or even seriously damaged by misuse and abuse.

Fancy and Bench Bits.

For fine bench work, and for pattern-making, the types of bits shown by sketch *E, F* and *G* are very desirable. Bit *E* is a most excellent tool with double cutting lips and single chip spiral. This bit has the bottom spur, but somehow it still seems to cut end-wood very well and it does not go so very hard in oak or other hard woods. Bit *F* is the easiest cutting bit on the market, and this bit works equally well against end or side-grain and it has neither lip or spur for cutting the edge of the chip. Instead of either the above devices, the edges of bit are turned up so that there is no need of either device, for there is no corner in the hole and no edge to be cut. The hole is round-bottomed and the chips are feather-edge affairs. But when these bits run against nails it is all off, and a new bit is the only cure for nail cutting. They will not be used for repair work.

A bit which will bore a hole with a smooth flat bottom is shown at *G*. This is a very handy tool when making patterns, and it can be started on a beveled surface, in a V-shaped corner, or almost anywhere that a common bit would give trouble in starting to work. A set of these bits is a most convenient possession for the millwright who prides himself upon the extent of his kit of tools. They are, also, most excellent machine bits for power use.

REAMING AND ENLARGING HOLES.

For this class of work, the bit shown by *D*, Fig. 140, is about the best "store" bit the millwright can obtain. The spoon bit, or "pod auger," shown by Fig. 135, is a most excellent device for enlarging a hole already made. But if it be desired to bore a hole over or around a smaller hole without following the first made hole, then bit *D* will do the business, likewise will bit *G*, provided the hole be a shallow one. Bit *G* will not remove chips; hence its use in reaming or enlarging holes is limited to holes not very deep. With the spur removed from bit *D*, it will bore through, across, or along another hole and will continue to bore straight in the direction in which the bit was started.

BORING LONG HOLES.

It is evident that holes of any depth, up to the length of the bit stem or extension, may be bored if care be taken to remove the chips before they clog around the stem. In boring holes four or six feet deep with 10 inches of chip-spiral, it is evident that only a certain number of chips can be cut off before the spiral will be full. Before the spiral gets quite out of sight, count the number of turns required to fill it. Suppose it is found that 25 turns of the bit fills the chip removing spiral. Bore only 20 turns of the bit, then remove it and bore 20 turns more. In this manner, a bit will never become clogged in the hole, something which freqeuntly happens when the chips are not "counted out."

Boring Through Knots and Spikes.

In mill repair work, a man cannot pick the place to bore a hole, but he must work to the mark, no matter if a broken spike, a fierce knot or a rusted-off bolt already occupies the place where a hole is needed. It is in such cases that the skill of the millwright becomes manifest. He will dig in with a cold-chisel and cut off the offending bit of metal, or he will, perhaps, be able to drive in a drift and force the metal to one side, after which the hole may be continued.

Sometimes it is necessary to weld an extension to the shank of a twist drill and remove the bit of hard metal in that manner. To guard against trouble in this direction, especially in small shallow holes, the up-to-date millwright adds to his kit a set of twist drill bits. These most excellent tools are like cigars, only "more so"—they don't give a continental who uses them, or what they are used on, and they will go right through wood, steel or knots.

Small Bits.

For boring holes less than ¼ inch in diameter, there is a profusion of styles to select from, and the millwright will do well to select a set of gimlet-pointed spoon bits and back them up with the twist drill bits mentioned in the preceding paragraph. The writer remembers the time when the "spoon" bit and the "capped spoon bit" were about the only obtainable bits for making small holes. Then, it was frequently necessary to forge a bit-shank and make a half-round attachment to the shank, which attachment, after being ground or filed to size, and made very smooth and sharp, would be twisted into a shape approximating a twist drill and a gimlet. The result was usually a bit which would work extremely well. Being soft, it would not break, but could be straightened when necessary. It had to be frequently sharpened, but it was an excellent addition to the stock of small bits.

To illustrate the scarcity of "store tools" only a few decades ago, one instance may be cited: A concern doing a good deal of machine work and millwrighting procured a "set" of twist drills

—they were just out then and a "set" consisted of one drill of each size by sixteenths of an inch. For the first year these drills were possessed by that shop, so great a rarity were they considered that the "set" of drills—board and all—were *kept in the office safe.*

SHARPENING BITS.

Usually the millwright will sharpen a bit with the first file he lays his eyes upon. Bits can be sharpened in this way, but there is a way of doing it which will secure a much better job and save a good deal of metal which is now wasted by using a coarse, heavy file. There are small files in the market, each with a small projecting portion in place of the usual tang, which serves as a handle. Several of these little files should be procured and kept for sharpening bits and for other small work for which regular files are not suitable.

An assortment of half a dozen files will enable a man to take care of any bit which may come along, but more shapes will prove very convenient at times. The author has a collection of about 30 different sizes and shapes, from 2 to 6 inches long. These files are kept in a tin box, one end of which is partitioned off a couple of inches and a bit of unslaked lime is at all times kept in the space thus partitioned off. In time, the lime becomes powdered and sifts among the files. It does no harm there, but never a bit of rust will ever find its way among those files as long as unslaked lime remains in the box. Lime will "gobble" every particle of moisture which comes along in the air A piece of lime kept in a tool chest will prevent the tools from rusting.

When sharpening bits, make it an invariable rule to do all the filing on that side of the lips and spurs against which the chips pass. Never do any filing on the surfaces which bear against the sides or the bottom of the hole. This makes it necessary to file all spurs on the inside and to file all cutting lips on the side next to the ship spiral. Sometimes it is necessary to file the other side of a lip in order to repair the damage done by some one who knew no better than to sharpen a bit on the outside. When such is the case, file the surfaces back far enough to give them clearance so the bevel or face thus formed will touch the wood at the cutting edge and nowhere else. When a bit is so filed that the heel of a bevel or face touches the wood before the cutting edge can get to work, then there is no use of trying to bore with that bit until it has been filed to the proper clearance.

REPAIRING DAMAGED OR WORN BITS.

It often happens that bits are put out of business by being run against nails or other pieces of metal. The expert mechanic can usually tell the first time a bit touches metal, but sometimes when working in a deep hole, there is so much friction that the bit turns very hard and the slight "rub" of nail or spike is not noticed and the bit hits a second time. Little damage can be done when a bit hits but once or twice, but when the unskilful man grinds a bit against steel time after time, then a good deal must be done to the cutting lip before that bit can make a hole again with any comfort to the user.

When a lip or a spur has been ground off to a dull corner, the only thing is to file away metal from the inside of that lip or that spur until a new cutting edge is formed. The filing must be carried back on a good long bevel so as to maintain the same angle of cutting edge which existed before repairs were made. There is a limit to the filing which can be done in this manner, and that limit is the amount of metal in spur or lip. The limit has been reached in bit *C*, Fig. 140, for the lip has been all filed away. In bit *E*, the limit is at *c*. When the lip has been filed back to that point, the spur will have been all filed away and the bit will be in the same condition as bit *C*.

EXPANDING A BIT.

Bits are sometimes ground against steel or grit until the diameter at *b c*, sketch *B*, Fig. 140, becomes less than diameter *d e*. When this happens, the fact becomes apparent at once by the power required to turn the bit in the hole. For the first inch, the bit may cut all right, but as soon as the larger portion of the spiral gets into the hole made by the worn down lip, then trouble begins and the bit runs very hard.

This defect is quite easy to remedy, and to effect a cure it is only necessary to stretch that portion of the bit between *b* and *c*. This may be quickly done by placing the bit in such a position that the chip side of the lip will bear firmly and solid upon some heavy mass of metal. The corner of an anvil or the jaw of a vise will answer very well. Sometimes the point of a crowbar proves to be just the thing when the bar is screwed tightly into the vise with only three or four inches of the point projecting above the vise jaws.

But with the bit thus placed and solidly held in place, with a pene hammer, or with a thick punch and any old hammer, place many blows along the cutting edge between *b* and *c*. The object is to stretch this edge, thus increasing the distance between *b* and *c* until it is a little greater than the diameter *d e*.

It is quite easy to thus increase the diameter, and the swaging may not be confined to the cutting edge alone. Just back of the edge there is more metal than at the edge itself, and swaging there stretches the edge itself, where there is no metal to swage. Bit *D* is very easy to fix so it will cut a larger hole. All that is necessary is to grind a dull cold-chisel to the rounded shape of a boiler calking tool; then, with the bit laid in some solid metal corner, place the rounded tool along the line *t t* and strike a few blows with a hammer. The result will be that the cutting lip is thrown outward beyond the line of the chip-spiral and thus cuts itself free.

Whenever a bit has to be straightened, never do it with a hammer. Just lay the bit on wood—end-wood is the best—then strike where necessary with a rather light hardwood mallet. This will bend the bit without stretching or swaging it as might be the case if the bit were laid upon an anvil and struck with a hammer.

CHAPTER XX.

WATER-WHEEL SETTING.

Water-wheel setting may soon become a lost art as far as its practise by the millwright is concerned. The wooden flume, the framed penstock and the wooden wheel case are things of the past and are seldom seen, much less constructed, nowadays. The boiler maker and the concrete worker does about all the water-wheel setting now, and it is done to stay. The old-time wooden construction used to last about seven years before it came to repair, and at ten years the whole thing had to be replaced with new material.

FLUME CONSTRUCTION.

It was the intention, when this book was planned, to give a description of advanced methods of flume construction, to discuss the methods of framing flume timbers, of planking and of water-proof woodwork in general, but in casting about for the latest examples of wooden flume construction, it must be admitted that even a single example worthy of description cannot be found. The open flume, the decked flume and the penstock have all been replaced by steel and cement so thoroughly that wooden flume making is an obsolete branch of millwrighting.

DECK FLUME FRAMING.

It was once the hight of the millwright's ambition to be able to frame and erect a deck flume in which water could be confined under 10 to 40 feet head, and not a drop of water found leaking from the flume. But the concrete wall reinforced with a little steel has taken the place of the high flume, the cast-iron and steel wheel case has replaced the wooden deck.

TURBINE-WHEEL SETTING.

When the setting of a turbine wheel used to be the labor of weeks for a considerable force of highly skilled mechanics, now it is only the work of a single day for a foreman, a gang of laborers and a couple of boiler makers—the latter to drive the rivets which connect the wheel case with the steel penstock and draft-tube.

The foundation for the wheel case was made when the foundations of the mill were constructed, and all that can be seen of it are several anchor bolts projecting from a smooth concrete floor. So exact has been the engineering work with transit and station-rod, that after the wheel case has been dropped in place, it needs nothing except being twisted around a little to coincide with the shaft and building lines and perhaps leveled up a bit with some brimstone and a steel wedge or two.

Modern turbine wheels are so entirely self-contained, even the larger sizes, that "wheel setting," as known to the old-school millwright, is absolutely a thing of the past. Nowadays, the millwright sets the wheel case, connects the gate hand wheel and puts on the belt. He may, perhaps, never even see the water wheel itself, unless, as a matter of precaution, as noted under the head of engine setting (chapter XVII, page 331), he takes down the wheel and looks to the manner of workmanship which has been sold to his employers with the water wheel.

Gear or Belt Transmission.

It is safe to state that not more than once in a lifetime will the millwright be called upon to set up a geared power transmission from water wheel to line shaft. The belt or the rope drive is the method, unless a direct-connected electric generator stands beside the water wheel and displaces both belts and ropes. The direct flexible connection between water wheel and electric generator is about as near the ideal as the millwright can get until he is able to take electricity direct from the water by means of a single machine!

With the gear transmission has gone the vertical water wheel shaft which made toothed bevel gearing a necessary link in power transmission. When the steel wheel case came into existence, the wheel shaft immediately assumed a horizontal position, thus making it possible to use plain belting to advantage when distant shafting had to be driven. In many instances, water wheels are direct-connected to the main line of shafting.

Penstock and Draft-Tube Wheel Setting.

It is no longer necessary to place the water wheel in a bottomless pit, or a pretty close approximation to one—the ancient "wheel-pit." By the development of the draft tube, a wheel may be placed at any level above the tail water inside of 30 feet and as good results obtained as when all the water-head was above the wheel. Gear case, penstock and draft tube can all be made perfectly water and air tight so the wheel can be located at any level inside which air pressure will not be exceeded by the water pressure.

To all intents and purposes, the modern water-wheel setting is merely a steel penstock running from the source of water supply to the lowest point available on the discharge side of the wheel, with the wheel case cut into the penstock at some convenient point not more than 30 feet above low water in the tail race. All the open flume that is necessary is what local conditions demand to connect the river with the penstock. All the flume and "wheel pit" construction necessary in the mill is that demanded by local conditions for supporting the water wheel and the other machinery.

Reduced to its lowest terms, modern water-wheel setting is nothing more than the construction of a pipe line of the necessary diameter to supply the wheels, the line to be continuous between head and tail water, the cutting in of one or more water wheels at some convenient point along the pipe (penstock) line not more than 30 feet above tail water.

Then and Now.

To the old-school millwright, the wheel-pit was a perpetual nightmare—a continuous performance pit in which he (the millwright) might be called at any minute, day or night, to "do a turn" in water to his waist as he wrestled with rusty nuts and bolts in the attempt to put in a new water-wheel step, three feet under water.

With the vertical shaft type of water wheel, it was necessary to provide means for holding up the wheel together with a ton or two of shaft and gears as well. This heavy weight was usually carried upon a conical "step" placed in the end of the shaft below the water wheel.

As long as the step was new, and did not fit very well, water could get between the shaft and the wood and carry away the heat as fast as generated by friction between the wooden step and the end of the wheel shaft.. But after the step had become worn very smooth, and fitted very closely into the conical cavity in the end of the wheel shaft, then water would be unable to get into the bearing, heat would soon char the wood, the charcoal thus formed would easily crumble under the load of shaft and water wheel, and very soon that step would "go down" and the wheel would strike the bottom of the case, or the gears on top of the shaft would fall out of mesh, perhaps stripping a gear or two during the operation.

Eventually, the millwright learned how to prevent the burning out of water-wheel steps by boring a vertical hole through the center of the wooden step and attaching a water pipe thereto. A force pump conveniently located in the mill forced a stream of water through the step at all times when the water wheel was running. The stream of water served two purposes. It not only lubricated the metal-wood combination of bearing surfaces, but it also carried away the heat generated by friction in the step bearing. Thus, the matter of step burning-out was forever settled by the stream of water business. Occasionally, the pump got out of order through lack of attention, and a step would go down, but that happened very rarely and the water-lubricated wheel-step was a pretty safe proposition.

But the steel wheel case fixed forever the matter of conical wooden water-wheel steps, by abolishing the step altogether. With the horizontal wheel and shaft, a pair of bearings are used, one on either side of the wheel the same as with any other machine, and the troublesome water-wheel step is gone forever—and with it the worst of the millwright's hardest work.

WATER WHEEL GOVERNORS.

The hardest task the millwright will have in connection with water wheels is to make the governor work in a manner which will govern the speed of the wheel within the required percentage of regulation. There has not yet been perfected a water-wheel governor which will keep the speed within 2½ per cent. under all variations of load. There is no possibility of so doing for the reason that a water gate, perhaps aggregating an area of opening of anywhere between two and ten square feet, cannot be opened or closed quick enough to permit of the quick regulation of speed within the stated limit.

Water cannot be handled with instantaneous results like those obtained from steam, and with the enormous quantity of water in a wheel case and penstock when the governor acts to check the flow of water, there is sure to be a considerable increase of pressure due to the partial closing of the gate which sets up a sort of "water-hammer" action in the penstock—sufficient pressure, in fact, to burst the penstock should it be of considerable length, and no vent or safety valve be provided.

It is for the purpose of relieving the "momentum pressure" which is caused by the more or less sudden closing of a gate that the relief vent is always attached to long penstocks. When the water-wheel regulator partially closes the water gate in response to an increase in speed, the very act of partially closing the outlet for the moving column of water back of, or above the wheel gate, increases the pressure of that body of water as noted above, and the increase of pressure increases the velocity of the water which does flow through the gates, thereby causing, in some instances, an actual increase in speed for a short time.

The action is the same, though in a contradirection, when the speed falls and the governor opens the gate to admit more water. A momentary fall in pressure is felt at the wheel, less water flows through for an instant, even though the gate has been opened wider. The water-wheel governor is thus so badly handicapped that outside means must be used for regulating the speed of a water wheel under suddenly varying load where close speed variation is a necessity.

A friction device, controlled and actuated by the water-wheel governor and water or steam pressure, could easily be made to keep the speed down during the adjustment of the water column in the penstock to the changed area of the opening at the wheel gate. The governor could easily break down the speed increase, but the device would be worthless for acceleration purposes when the speed is to be increased.

The very close regulation of a water wheel will probably be fully and satisfactorily accomplished only by the use of electricity through the medium of a generator, a motor and a storage battery; the water-wheel governor to be connected so as to accomplish the opening and closing of the regulating gate by outside energy, and at the same time to so actuate an electric controller that the electric generator shall be made to do the work of a quick-acting magnetic brake when the speed increases. But when the speed decreases, and the governor opens the water gate, then the electrical control shall cause the motor to get busy and increase the speed of the water wheel during the short period of time required for the water-wheel governor to obtain control of the speed. Possibly a small motor-generator and a limited capacity storage plant could be made to do the work with but small loss of power by absorption in the electrical appliances which need have but a small percentage of capacity, compared with the water power it is to govern.

Be this as it may, it is certain that a man can lift himself over a shaft by his boot-straps just as easily as a water-wheel governor can closely govern the speed of a water wheel by throttling the water supply of the wheel.

Framing for Wheel Shafts.

The millwright who will keep water wheels in good condition at all times will see to it that their shafts are properly supported, both as regards boxing and timbering. A water wheel is a peculiar beast at best, and it cannot do its full capacity of work when binding in badly supported bearings, or when running out of line with a kink or two in the wheel shaft caused by worn out babbitt or displaced pillow-blocks.

The timbering or the shaft supports are very important factors in the maintenance of a water wheel. Unless the timbering is adequate, the wheel will not work to the highest efficiency. In the days of geared transmissions, nothing would cause gears—especially those running at high speed—to break or to wear out faster than a weakness developing in the shaft timbering. The author has seen high speed cut gearing stripped of its teeth by poor timbering; shafts have broken and hangers have been torn down and belts tangled up and cut to pieces, all because of timbering too weak to stand the strain placed upon it.

When taking charge of a power transmission—particularly a water-power mill, the millwright will do well to go over the shaft timbering very carefully, and calculate the strains upon such members as seem doubtful as to strength appearance. And such weak members as are found should be carefully strengthened until they are fit to stand the strain without undue deflection.

PENSTOCK BUILDING.

The millwright has been called upon at one time or another to construct penstocks of all sorts of material, wood, steel, brick and concrete being among the materials which must be used. In all cases it is necessary to use the kind of material which can be obtained the most readily, and at the same time not prove too costly to work and which will not decay too quickly.

Penstocks have been built of wood for many years, but at the present time, unless located in a remote district where timber is abundant, steel should be used for penstock construction. Concrete may be used for penstock construction, but it is not to be advised unless it be in sections which are to be deeply buried in the earth. For penstocks above ground, the author does not advocate the use of concrete for the reason that a penstock is always under tensile strain, and it is not good engineering to subject concrete members to strain of that character. This being the case, it will be necessary to put steel enough in the concrete construction to safely carry all the tensile strain.

Not only must steel enough be put in to carry the strain of the water due to its weight and static pressure, but there must be enough strength to withstand any "water-ram" action due to the sudden closing or partial closing of the water-wheel gates. There also must be strength to withstand the possible settling of a portion of the penstock and the consequent poor distribution of weights.

All these things being considered, it is evident that there must be steel enough put in the penstock to carry all the strains to which it may be subjected, including those of external shocks. As this is exactly what the steel plate penstock has to do, which contains only steel enough to safely do that work, it would not be profitable, in ordinary cases, to put in as much steel as would make a plate penstock, and then daub on an equal additional cost for cement!

SPILLWAYS AND WASTE WATERWAYS.

The millwright is frequently called upon to construct ways by which water may find its way to the main channel when the river is high and overflows its banks to the danger of dam or abutments. In cases of this kind it is necessary to build some kind of a floor which the water cannot wash out, no matter how high its level may raise.

One of the best, if not the best, method of constructing a water passage of this kind is to provide as smooth a foundation as possible, leveling off the ground as necessary and placing a foundation such as can be best made with the material at hand. If rock is plentiful, put in a rip-rap of the largest stones available, fill the irregularities with smaller stones and spread on a thin layer of concrete—not more than a couple of inches will be necessary. Next, cover the concrete with wirecloth of a size and mesh in proportion to the load to be carried.

If the location is such that never more than a foot of water will run over the spillway, then calculate the strength of wire-cloth necessary to sustain that amount of water over areas as large as apt to be undermined in case of trouble of that kind. The spillway is to be treated the same as a floor or a roof. If there is a possibility or a probability that it may be undermined and hang suspended on boulders, ledges or timbers six feet apart in either direction, then calculate the amount of steel necessary in wire-cloth to sustain the weight of the probable depth of water on the spillway.

The steel section having been determined as above—and exactly as for any other reinforced concrete surface—spread the wire-cloth, then cover it with a layer of concrete, two to six inches in thickness, according to the amount of water to be handled. A spillway constructed in this manner is very elastic. In case it be undermined, it will hang together within limits of the steel strength and still carry away the water, even though it be heaved about in places and sagged into all sorts of curves.

During construction work, temporary spillways are easily made by simply spreading light wire-cloth along the path of the proposed water course, the cloth being laid upon sticks, strips of board, small poles or any material which will serve to keep the wire netting an inch or so away from the ground. Then spread a couple of inches of concrete on the netting, and a waterway will be secured which will stand a great deal of hard usage, and which will be almost as flexible, comparatively speaking of course, as a blanket.

Canals and Wheel Pits.

It is no longer necessary for the millwright to dig a long canal for bringing the water to the mill site, and it is no longer necessary to dig a pit big enough to put the mill in. As stated on page 376 the wheel-pit is no longer necessary, and the steel penstock tube is usually much cheaper than the flume. The canal may be used for long distances, but it is sometimes more profitable to locate the water wheel independently of the mill and use electric transmission.

Where light canals are to be placed in porous soils, the wire netting concrete blanket described in the preceding paragraph makes a first-class lining for a canal. It also has the advantage of being proof against muskrats. When a loam embankment has to be erected to serve as a dam for retaining water, in place of the puddled clay core just try the concrete wire-cloth blanket. It is wonderfully strong and fully as cheap as the puddled clay core and it may be made continuous by simply lapping the wire-cloth a few inches.

Foundations in Bog and Quicksand.

When a foundation has to be secured in a bog, or upon a bed of quicksand, in addition to the conventional methods of depositing brush, stone, logs or bags of concrete, or of dumping in a heterogeneous mass of concrete, the millwright will find that a wire-cloth blanket makes one of the best beginnings for a foundation which can be constructed. It is far ahead of brush, hay or timbers for building a foundation upon and it is easily constructed, either above or below water.

Dams and Aprons.

When the millwright meets with the problem of constructing dams in alluvial streams, the great question is to prevent the water from breaking through under the dam, which must be placed upon timbers imbedded in the sand—mud-sills, as they are technically termed. If possible, the owners should be induced to put in concrete construction with enough reinforcement to withstand the strain of any freshet that may ever get at the dam. The great danger is, as stated, the undermining of the structure, and this may be prevented by using the concrete blanket for some distance above and below the dam.

The dam proper may be constructed of any available material, the blanket being used simply for the purpose of guarding against undermining of the structure. There is, however, a method of utilizing wire-cloth for the entire structure, the scheme being diagramatically shown by Fig. 141, in which *a* represents a wire-cloth apron, extended as far down stream as local conditions make necessary. Both ends of the apron are imbedded in the bottom of the river as deeply as it is possible to excavate. Upon apron *a* is placed a pile of dirt, stones, logs, brush, ashes, and any other matter which can be obtained. When earth filling is used, one part of cement is mixed with it by sifting it into the wheelbarrows during the filling operation, one shovelful of cement being used to 99 parts of earth, the number of shovelfuls to a barrow being counted a few times and the necessary amount of cement thus determined. The cement and earth is put in place dry. It is mixed by the handling during its placing, but it is not wetted at any time. That is left to the river and to natural moisture.

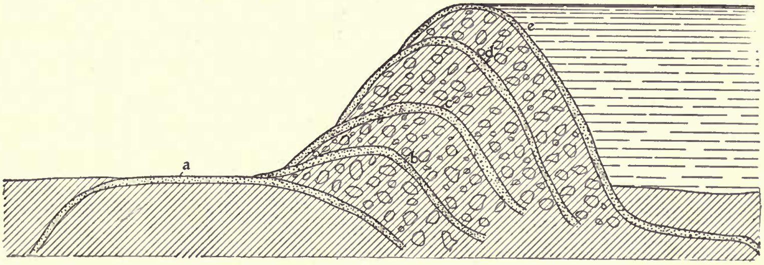

FIG. 141.—WIRE-CLOTH DAM FOR ALLUVIAL STREAMS.

The filling is tamped as firmly as possible along the line *b*, the angle of which must not exceed the angle of repose of the material used, which, if sand, will be 30 degrees, while if of clayey material, it may approach 60 degrees. After the layer *a b* has been put in place, lay down another wire-concrete "blanket," the wire being simply laid down upon a thin coating of concrete and another thin coating spread over the wire-cloth which is strengthened by lapping the strips, according to necessity. The concrete had best be made of aggregate not over ¾ inch in diameter in order that the blanket may be kept down to about 2 inches in thickness.

Proceed in like manner to place filling *b c,* ramming and smoothing as before; then lay down blanket *c,* and so continue until the required hight is reached. The last blanket *c* is to be extended up the stream as far as necessary to prevent the water from getting under the dam. In some cases it may be necessary to extend this layer 100 feet or more up stream. The ends of the blankets which come against the river-bed are extended as far into the earth as it is possible to excavate. A dam built in this fashion will stand a great deal of wear, and even if the layer filling should wash out to a considerable extent little damage will result. The up-stream end of each blanket may be extended as far as thought necessary for the safety of the structure.

SETTING HYDRAULIC RAMS.

Where only a small portion of the available water is required, an hydraulic ram may be used to advantage. It is possible to force water 200 feet high with a well-arranged ram, but several conditions must be filled in order to secure such service. Water may also be conveyed 3000 feet with a ram, but the quantity delivered at such extreme distances must necessarily be but a very small proportion of the amount of water delivered to the ram.

In tests, the highest efficiency obtained from a ram was 74.9 per cent., but this varies according to the ratio of lift and fall, being greater at low than at high ratios. Clark gives the following percentages of efficiency for ratios varying from 4 to 26:

Ratio of lift to fall.....	4	6	8	10	12	14	16	18	20	22	24	26
Efficiency per cent.....	72	61	52	44	37	31	25	19	14	9	4	0

Thus with 10 feet head and 40 feet lift, the ram would show an efficiency of 72 per cent. But with 10 feet head and 260 feet lift, the ram could just raise water to that hight, but it would be unable to deliver any; hence its work at that ratio would have no efficiency.

In setting rams, the millwright should look to it that freezing is prevented. Frost is a deadly enemy of the hydraulic ram and so is vegetable matter. A very small twig or root, caught between clack and seat, will put the best ram out of business instantly and completely. To prevent occurrences of this kind, the intake should be most carefully guarded, and should never be permitted to take water from the surface or from the bottom. The intermittent flow of water into the intake pipes makes it particularly liable to draw in foreign matter with the water supply.

The intake pipe of a ram should be protected by a large screen surface completely surrounding the intake pipe and at a distance of several inches at least from the intake pipe opening. With the pipe thus screened and the screen wholly submerged, and no portion of the screen resting on the bottom or sides of the supply well or stream, there should be little trouble from clogging of the valve. The screen, however, must be regularly inspected and cleaned. Frogs frequently put a ram out of business if the screen permits their getting into the drive pipe.

One point in particular, and a vital one, is apt to be overlooked by the millwright who must set up a ram. In every case, the volume of the feed or drive pipe should equal the volume of the air-chamber on the ram. A good deal depends upon this point, and frequently the poor working of a ram may be traced directly to an inequality of volume between the two.

Thus, when a long drive pipe must be used, it should be made smaller in diameter in order that it fits the air-cylinder. Again, a man may think that a pipe a size or two larger than called for by the opening in the ram will give all the better results for being large, and is puzzled to ascertain why the ram works so poorly when he went to the trouble and expense of putting in such a nice large drive pipe? He did not know that by putting in the larger drive pipe he had "over-cylindered his engine," but such is the fact.

Water Supply and Pumping for Steam and for Fire.

Unless there be unusual conditions, the elevated tank for water supply is most desirable for factories where there is no city water service or other supply to be had under pressure. The problem of boiler washing and filling is solved by the use of the elevated tank, and when a tank is erected, put in as large a one as possible. The regular standard water tank contains 35,000 gallons and it costs little more to put in a tank of this size than it does to install one of one-third that capacity.

For pumping into a tank, never attempt to use a boiler feed pump, especially a steam pump, for to do so costs too much. Use a tank pump, and even then the cost is a great deal more than it would be were a power pump used, as discussed on page 354 in connection with boiler feeding. The electrically driven pump is very desirable for pumping water to tank, and when connected for outside "emergency current" a most excellent arrangement is effected, making the water supply independent of shut downs of boiler and engine.

FIRE HYDRANTS AND HOSE.

It does little good to provide fire hydrants unless some of the mill operatives are regularly drilled as a fire company. The millwright who is requested to organize and maintain a fire department which will be of any practical value in case of fire, must drill his company with as much care and persistence as is practised in a regular fire department.

In locating hydrants and hose, it does very little good to run a stand pipe through the factory floors, attach a length of hose on each floor at every stand pipe and then—never touch the hose again until fire breaks out. Hose thus connected and left for months or years is almost sure to be found rotted away where leakage from the valve has kept the fabric wet during many long weeks. The author regards factory distributed stand pipes and hose as almost utterly worthless for fire protection. In fact, it is utterly worthless unless some man has made it his business to keep everything in order and the system is tested at least weekly by actual use. If an efficient fire hose system is to be maintained in the mill, it must be taken care of, and time at least equal to that of one man must be spent in care of the system.

Hydrants located inside the factory buildings are hardly worth putting in. Locate the hydrants outside of the buildings and give adequate protection from frost. Keep the hose on a reel or in a hose wagon and train a hose company to use the fire material. Then, and only in that manner, will there be any protection in the outlay of several thousand dollars for pipe and hose.

Locating and Piping Automatic Sprinklers.

The only adequate method of fire protection for factory buildings is a well arranged system of automatic sprinklers. But sprinkler systems, as well as stand pipe and hose, must be taken care of and tested frequently and periodically. In all fire fighting apparatus, it must be one man's business to take care of the outfit and he must *know,* from actual tests and trials, that everything is O. K.

There are two systems of automatic sprinkler fire protection, the wet and the dry systems. In the first the pipes are at all times kept full of water and under pressure, the water being at each sprinkler ready for instant use. In the other, or "dry" system, the pipes are under air pressure all the time, the water being kept out of the sprinkler system by means of an automatic valve which admits water whenever the air pressure in the system is lowered by the opening of one or more of the sprinkler heads.

Both systems have their good and their bad points, and the millwright must understand and humor each, as may be necessary by the system in use. Seemingly, the wet system is ideal for the water is there ready for instant use. But water will rust iron, and the pipes may become completely closed with oxide deposits, the openings into sprinkler heads become rusted over and water fails to issue when a head acts under heat. Again, there is the unpleasant and ever-present danger from leaks in the pipes comprising the system. The many hundreds of feet of pipe in a large system are each and all prepared at an instant's time to deluge the factory with water should a belt happen to fly off its pulleys and break a pipe or tear off a sprinkler head.

Somebody must be continually going over the system and removing and cleaning sprinkler heads, and making sure that the pipes are not clogged with rust or sediment. This man must be all the time looking for leaks, and blowing out the main pipes to keep them clear of rust.

When the dry system is used, the same man has his work cut out for him. He must be alive all the time to see that leaks do not exist in the sprinkler pipes, for leakage here will cause the air-pressure to fall and then down comes the water. Another thing to contend with in the dry system is the necessity for keeping the pipes so alined that drainage is readily effected after the water has been turned on, either accidentally or during tests. A little water left in a pipe will rust even quicker than when the pipe is full of water, hence the millwright has plenty to do in keeping the pipes free from water after each test.

The valve used upon dry systems has an uncomfortable habit of frequently acting without orders, and the sprinkler pipes will be found full of water without any excuse for that condition, making necessary the drainage of the pipes again and the resetting of the valve.

Yet, with all their faults, these two systems are very desirable, and the millwright must become acquainted with the requirements of both and be able to install and keep in order the one he finds the best adapted to the case in hand. The sprinkler system, to be of the highest efficiency, must be most carefully laid out, the sizes of the several pipes must be acurately calculated to handle the exact number of sprinkler heads dependent upon that pipe. The best method of maintaining pressure must be found and adopted, and then the millwright may be sure that the system will be an efficient one as long as it is properly taken care of.

INDEX