AA000106282 7
UC SOUTHERN REGIONAL LIBRARY FACILITY

T
369
M3

THE LIBRARY
OF
THE UNIVERSITY
OF CALIFORNIA
SANTA BARBARA
COLLEGE

PRESENTED BY

William E. Roberts

8-307254

Works on Drawing

by Frank E. Mathewson

Published by the Taylor-Holden Company

Springfield, Mass.

Notes for Mechanical Drawing - - - - -	$1.25
Brief Course in Machine Drawing - - - - -	.60
Architectural Drawing Plates	
Folio 1. Details of Construction (10 plates)	.75
Folio 2. Brickwork and Masonry (10 plates)	.75
Mechanical Drawing Alphabets, (set of six)	.10
Perspective Sketching from Working Drawings	1.00

Others in preparation.

PERSPECTIVE SKETCHING From Working Drawings

BY

FRANK E. MATHEWSON

Assistant Principal : The Technical High School, Cleveland, Ohio

THE TAYLOR-HOLDEN COMPANY

Springfield, Mass. - 1908

—First Edition—
—October 1908—

Coypright, 1908
BY
Frank E. Mathewson.

The F. A. Bassette Co., Printers, Springfield, Mass.

T
369
M3

UNIVERSITY OF CALIFORNIA
SANTA BARBARA COLLEGE LIBRARY

69032

Preface

The course in perspective sketching from working drawings, outlined in this manual, is a result of the author's experience in teaching this branch of drawing to first and second year pupils in the Technical High School, Springfield, Massachusetts. It was found that many pupils who could readily make working drawings from models or sketches, did not easily recognize similar forms when embodied in more or less complicated working drawings. A series of exercises and problems in perspective sketching from working drawings without the use of models, was introduced into the course in drawing. The result was so satisfactory that gradually more time was devoted to this subject, and it has been found that students progress more rapidly in the reading and making of complicated working drawings after completing this part of the course. The great advantage to the student in having the power to translate working drawings into perspective sketches is that it gives him the ability to make clear in this way the meaning of such drawings to those unfamiliar with them. It is not within the province of this manual to enter into a discussion of the many theories and various principles of perspective drawing. Aside from a plain statement of facts connected with the fundamental principles of perspective, the manual contains exercises and problems carefully selected in order to make suitable application of these principles in perspective sketching from working drawings.

August, 1908.

Contents

Text

Section		Page
1	Introduction	7
2	Definitions	8
3	Measurements	12
4	The Square in Perspective	13
5	The Cube in Perspective	15
6	Angle Plate	19
7	The Circle in Perspective	21
8	The Cylinder in Perspective	27
9	Estimating Measurements in Perspective	28
10	The Elliptical Protractor	30
11	The Rectangular Prism in Perspective	34
12	The Equilateral Triangle in Perspective	39
13	The Hexagon in Perspective	41
14	The Square Pyramid in Perspective	45
15	The Cone in Perspective	47
16	Perspective Sketching from Working Drawings	48

Full Page Plates

Number		Page
I	Illustrating "Definitions"	9
II	Parallel Planes	11
III	The Square in Perspective	14
IV	Cubes in Perspective	16
V	Angle Plate; Drawing and Sketch	18

VI	Angle Plate in six positions	20
VII	The Circle in Perspective	22
VIII	Parallel Circular Planes	24
IX	Cylinders in Perspective	26
X	Rectangular Prisms in Perspective	35
XI	Rectangular Prisms and Card in Perspective	37
XII	The Equilateral Triangle in Perspective	40
XIII	The Hexagon in Perspective	42
XIV	The Square Pyramid in Perspective	44
XV	The Cone in Perspective	46
XVI	Hollow Sleeve	51
XVII	Bush for Bearings	53
XVIII	Grooved Block	55
XIX	V Block	57
XX	Crank	59
XXI	Offset Standard	61
XXII	Angle Brace	63
XXIII	Intersecting Square Prisms	65
XXIV	Crank	69
XXV	Pipe Tee	71
XXVI	Shaft-Hanger	73
XXVII	Tool Post. Working Drawing	74
XXVIII	Tool Post in Perspective	76

Perspective Sketching from Working Drawings

1. Introduction. To the engineer, architect, designer and expert craftsman, drawing is essential as a means of graphic expression of thought. Through its use, they are able to design, clarify and record their inventive suggestions. Without it, any advancement in their professional work is practically impossible. A course in drawing should involve such a study of the various principles and methods of representation, and their application to the arts, that it shall equip the student with all the necessary information from the drawing side, so that he will be able to draw understandingly, to grasp a difficult problem, to get it on paper quickly, and make a drawing that shall be acceptable in any drafting room or shop.

"*Mechanical or constructive drawing is the language of the workshop,*" is a familiar statement. Nasmyth says, "*Mechanical drawing is the alphabet of the engineer. Without this he is merely a 'hand;' with it, he indicates the possession of a head.*"

Equally important with, and a very necessary adjunct to the knowledge of mechanical drawing is the ability to readily make freehand sketches, either in the form of working drawings or in perspective. It is often necessary to explain working drawings to those unfamiliar with them. To be able to quickly translate the working drawing into a perspective sketch of the object, without the use of the model, in order to make clear the thing represented, is an accomplishment with which every draughtsman should be familiar. The ability to draw and sketch readily is

thus becoming more and more a necessary accomplishment of considerable importance to those engaged in the various crafts, and while it is not likely that every one will become an artist, it is possible that all may be taught to draw well through a thorough understanding of principles. Once learned the principles will fall into their proper place. The draughtsman will do his best work only when he can record his impressions intuitively and correctly, the rules and principles of perspective being applied almost unconsciously.

2. Definitions. PLATE I. PERSPECTIVE is the science of representing in picture form the position of lines which represent objects as they appear under certain more or less definite conditions.

A PICTURE may be described as a drawing which by its lines represents an object as it would appear if viewed through a window, thus giving a clear impression of its form, size and position in space.

There are several familiar phenomena of perspective which must be particularly observed in formulating principles for perspective sketching.

Receding parallel lines seem to converge toward a common vanishing-point. A familiar illustration of this may be found in looking down a straight railway track where the rails, telegraph wires, fences, etc., all seem to converge to a point which is directly in front of and on a level with the eye. Many similar illustrations may easily be obtained by looking at any series of retreating parallel lines.

The farther an object is from the observer, the smaller it appears to be. This will be noticed in the same illustration of the railway tracks, for in looking at the spaces between the telegraph poles or the railway ties, the nearer spaces appear the larger, although they are the same distance apart as those which are farther from the spectator.

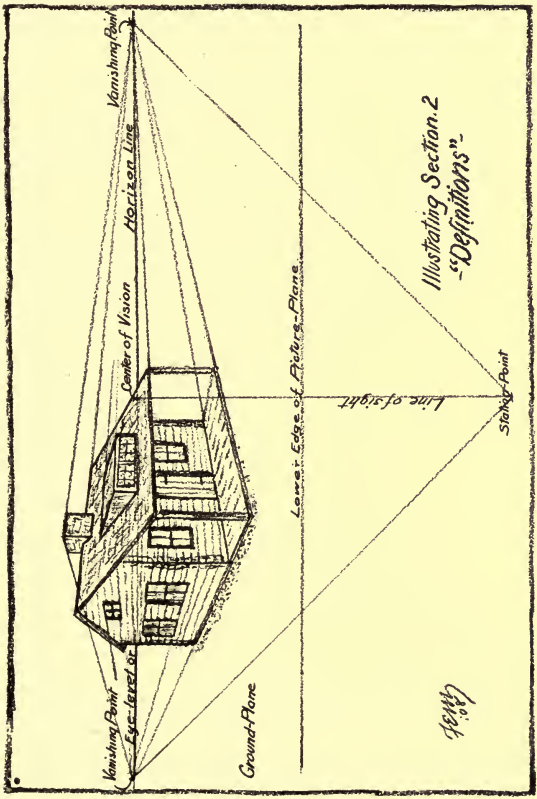
Vanishing Point
Horizon Line
Center of Vision
Eye-level or
Vanishing Point
Ground-Plane
Lower Edge of Picture-Plane
Line of sight
Station-Point
Illustrating Section 2
"Definitions"

PLATE I.

The picture of that point toward which the parallel lines retreating in that direction seem to meet is called the VANISHING-POINT. (V. P.)

The STATION-POINT (S. P.), sometimes called the "*point of sight,*" locates the position of the observer's eye.

The PICTURE-PLANE (P. P.) is an imaginary, transparent plane, placed vertically in front of the observer, through which he is supposed to be looking and on the surface of which the picture is represented.

The CENTER OF VISION (C. V.) is that point on the picture-plane directly in front of the place where the observer is looking, and is at the foot of a perpendicular from the station-point to the picture-plane. It should not be thought of as the center of the picture, as if the two were the same, for they are not. But a small part of that which is seen may be included in the limits of the sketch, and that part may lie principally either above or below the horizon.

The LINE OF SIGHT is the line from *S. P.* to *C. V.* It is perpendicular to the horizon line and to the picture-plane at *C. V.*

The HORIZON in a drawing is the picture of that line which is infinitely distant from the observer, and opposite the level of his eye. It may be considered as the farther edge of a horizontal plane which is perpendicular to the picture-plane. It is sometimes called the eye-level line. As all parallel lines have a common vanishing-point on the horizon or eye-level line, so must all parallel planes have a common vanishing-line. This is illustrated in PLATE II. If we represent a very large square prism extending above and below the horizon, or eye-level line, and then trace the outlines of various planes, beginning at the bottom of the prism, at intervals, until the top of the prism is reached, it may be plainly seen that all of these planes vanish in the

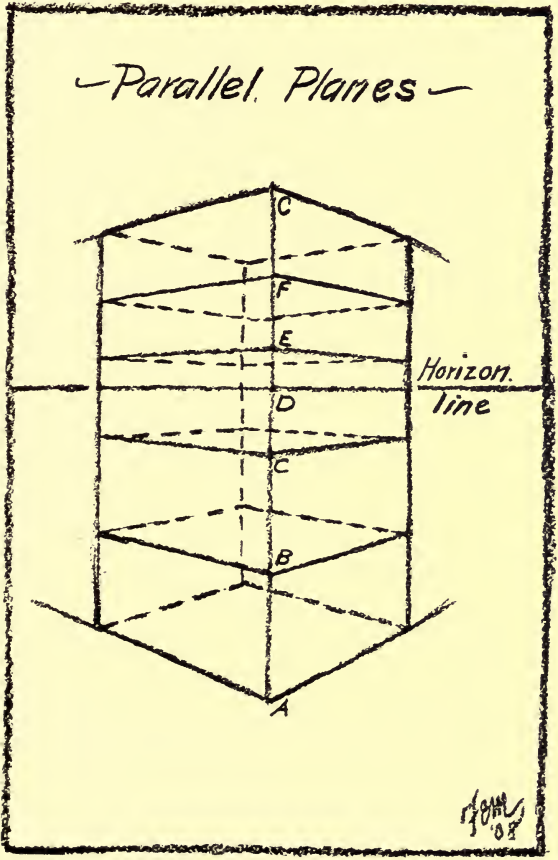

PLATE II.

horizon or eye-level line. It will also be noted that the distance between the front and back corners of the planes decreases as they approach the eye-level line.

3. Measurements. All perspective measurements must be purely relative because objects change their appearance according to their distance from the observer. It is impossible to tell, until proper tests are applied to the drawing, whether an object in a picture is represented the right size or not. Making a "drawing to scale" has not the same meaning in perspective that it has in mechanical drawing, and in sketching, all measurements can be better estimated than scaled. After a little practice, it is possible to make such estimates with a very reasonable degree of accuracy. When it is necessary to make a perspective drawing from the working drawing, or to represent a form which is not at hand to sketch from, the draughtsman must depend wholly upon his knowledge of the appearance of forms which has been gained by experience in sketching, together with an understanding of perspective principles. A rough sketch is outlined, and to this, perspective tests are applied in order to correct the inaccuracies of the work and to make the drawing look as if it were made on the transparent picture-plane between the draughtsman and the object. The exact positions of the vanishing-points need not be considered, although it is necessary to know where they ought to be if the estimate needs correction. This is also true in regard to the exact measurements of the different parts. The true impression which the drawing will make upon the observer is the thing desired and toward which the draughtsman must ever strive.

One of the most frequently used methods of measuring in perspective is by means of the intersection of two or more series of parallel lines, and this method depends upon the geometric principle that spaces between parallels are equal. Figure 1 shows an appli-

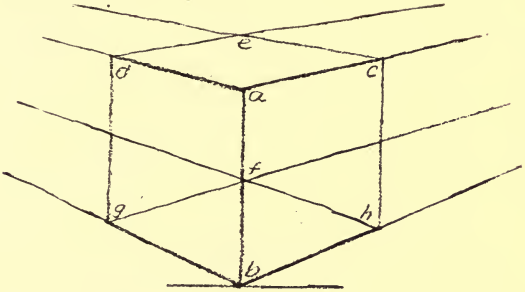

FIGURE 1.

cation of the measurement by parallels, for if the three edges, *ab*, *ac*, and *ad*, are determined, then the other edges parallel with these, which complete the picture of the cube, may be represented by drawing lines apparently parallel and converging with the first three lines. These lines also determine the vertical height of the edges, *ch*, *dg*, and *ef*. Excellent examples of the method of measuring by parallels are illustrated in PLATES V, XVIII and XIX.

4. The Square in Perspective. PLATE III. With little or no knowledge of perspective principles one may make a fairly good sketch of a square, for almost any four lines that enclose a polygon, will be the possible picture of a square seen from some point of view. The perspective conditions may not always be good ones to use for a picture of the square, but they will, however, be true. In PLATE III, the horizontal line from *a*, Figure 1, to *a*, Figure 3, represents the lower edge of the picture-plane which is assumed to be perpendicular to the ground-plane that vanishes in the horizon or eye-level line. In each figure, the line, *ab*, which is the

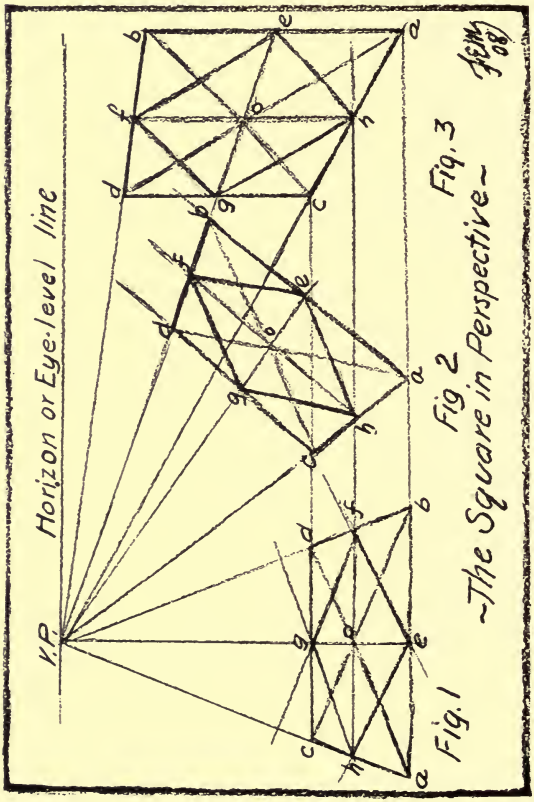
V.P.
Horizon or Eye-level line
Fig. 1
Fig. 2
Fig. 3
~The Square in Perspective~

PLATE III.

front edge of the square, *abcd*, is parallel with the picture-plane. The diagonal, *hf*, of the inner square, *efgh*, is also parallel with the picture-plane, thus making the edges of the square, *efgh*, at 45 degrees to the picture-plane. In Figure 1, both squares are represented parallel with the ground-plane and directly in front of the observer. In Figure 2, they are moved to the right and inclined at an angle of about 45 degrees to the ground-plane. In Figure 3, the squares are shown in a vertical position, perpendicular to the ground-plane and moved farther away from the spectator. In the application of the principles illustrated in this plate, it is not necessary that the horizon line or vanishing-point be located on the drawing. The direction of the lines of the square can always be determined by their relation to each other.

PROBLEM 1. Make sketches of a square in perspective, using PLATE III as a guide in arranging the drawing, but showing the square in four positions, none of which shall be exactly like those in PLATE III.

5. The Cube in Perspective. PLATE IV. The cube is the most simple in form of the geometric solids, and as nearly all forms may be analyzed by using the cube as a unit, it is necessary that the student should be able to determine the best perspective position in which to represent it.

The following rules, based on perspective principles already stated, are to be used in sketching the cube in perspective.

Retreating parallel lines in the object all converge to a common vanishing-point in the drawing.

Vertical lines in the object appear as vertical lines in the drawing.

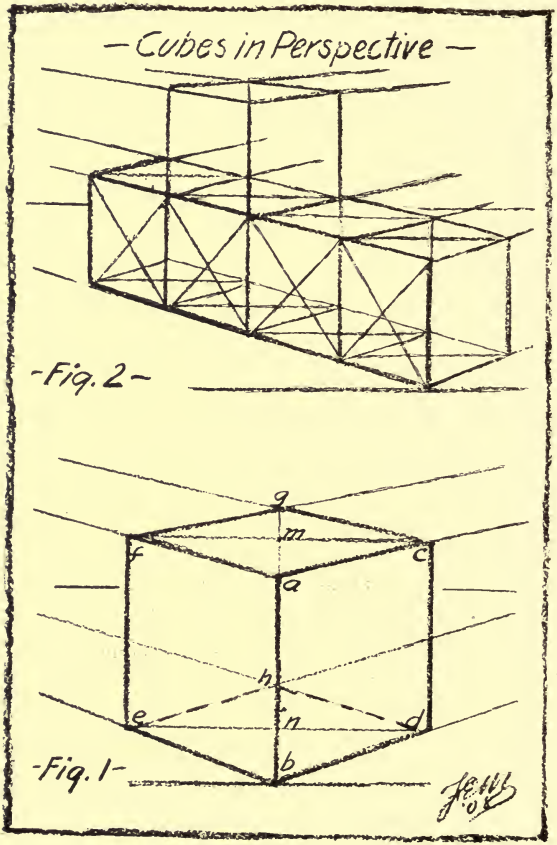

PLATE IV

The nearest line of a cube in perspective is the longest line in the drawing, and all retreating parallel lines converge from this line to their common vanishing-point in the horizon line.

The vanishing-points should be considered as being at a great distance from the nearest line of the cube in order to show but slight convergence in each series of parallel retreating lines.

A good position to assume in making a sketch from a working drawing, when using the cube as a unit, is that where the vertical faces are equally inclined from the picture-plane and the top face far enough below the eye so that the drawing will show the apparent length of the short diagonal equal to about one-third of the height of the front vertical edge. The length of the long diagonal should be little less than one and one-half times the front vertical edge.

Figure 1, in PLATE IV, represents a cube in such a position. After determining the vertical height of the cube, *ab*, and drawing the top edges, *ac* and *af*, of indefinite length, the back corner, *g*, may be located about one-third of the height, *ac*, vertically above *a*. Then drawing the long diagonal, *fc*, through *m* which is just a little nearer *g*, than it is to *a*, the corners, *f* and *c*, are definitely fixed. After drawing *cg* and *fg*, it will be noted that they have a slight convergence toward the lines, *af* and *ac*. The lines, *bd*, *be*, *dh*, and *eh*, are then drawn, and care must be taken to have them apparently converge with the lines of the top face, toward the same vanishing-point which is somewhere in the eye-level line at an indefinite distance from the front vertical edge of the cube. Points, *e* and *d*, are directly under *f* and *c*, and parallel vertical lines connecting *fe* and *ad* complete the drawing. Figure 2, in this plate shows the construction of square prisms based on the cube

Angle Plate

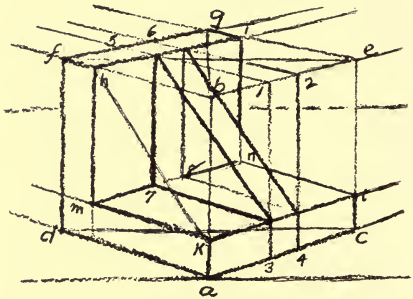

Fig. 3.

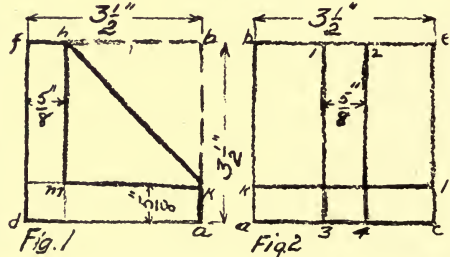

PLATE V.

as a unit. The four cubes in line illustrate the construction of a square prism in a horizontal position, and the two cubes, one above the other, show the construction of a vertical square prism.

PROBLEM 2. Make a sketch similar to Figure 1, PLATE IV, of a cube, the nearest edge of which appears to be 3″ long.

6. Angle Plate. PLATE V. Figures 1 and 2 are working drawings representing the two elevations of an angle plate. By extending the lines, *fh* and *ak*, to *b* in Figure 1, the outlines of both Figures 1 and 2 represent two views of a cube which may be used as a unit in making the perspective sketch of the angle plate. Sketch the perspective of the cube, Figure 3, with the front vertical edge, *ab*, equal to the height of the angle plate, $3\frac{1}{2}$″, and the retreating parallel edges located as represented in Figure 1, PLATE IV. The lines of the angle plate which are parallel with the outside lines should then be sketched, starting from the point *e*, which is $\frac{5}{8}$″ above *a*, and converging toward the same indefinite vanishing-points of the lines with which they are parallel in the working drawing. The point, *m*, is at the intersection of lines drawn from *k* and *h*, and *n* is at the intersection of lines drawn from *1* and *i*. The line *mn*, is at the intersection of the two inner surfaces of the angle plate. Estimate the position of *1* and *2*, sketch the vertical lines, *1-3* and *3-4*, and the retreating converging lines, *1–5* and *2–6*. These lines locate the positions in the lines, *hi* and *kl*, of the ends of the slanting lines forming the brace. The vertical lines of the brace are then sketched, locating points *7* and *8*, from which the lower lines of the brace are continued to the line *kl*.

The six figures in PLATE VI, represent the angle plate in as many different positions. The method illustrated in PLATE V, that of using a perspective

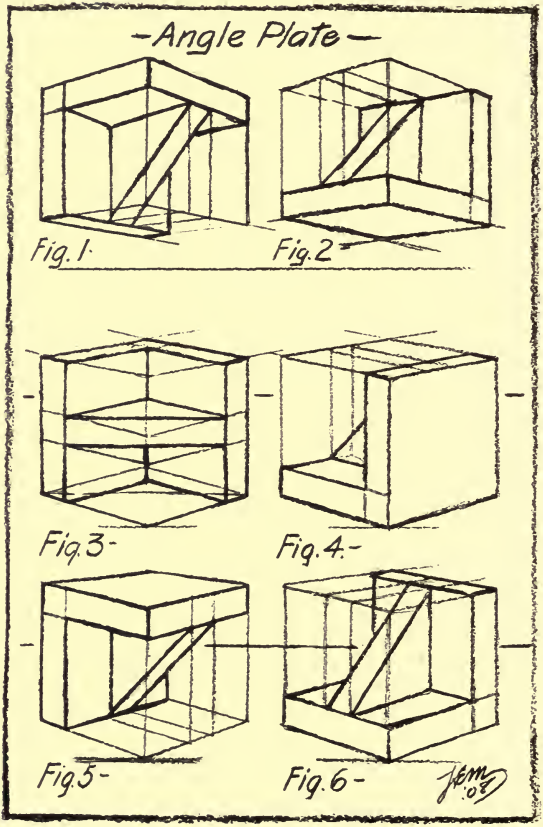

PLATE VI.

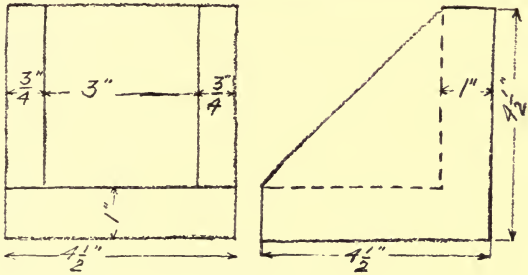

FIGURE 2.

cube for the unit of construction, is followed. In each figure, the construction by the intersections of the series of parallel lines converging in either direction from the nearest line toward common but indefinite vanishing-points, and the location of the cube, either above or below the eye-level, is clearly illustrated.

PROBLEM 3. Make perspective sketches showing two different positions of the angle plate, of which Figure 2, is the working drawing.

7. The Circle in Perspective. PLATE VII. The circle in perspective may have three possible forms, depending altogether on its position in regard to the observer. If the plane of the circle is parallel with the picture-plane, then the result will be a circle. If the plane of the circle is perpendicular to the picture-plane and directly in front of the observer, so that he is looking tangent to the plane of the circle, then the result is a straight line. If moved in the slightest degree above or below the eye-level or to the right or left of the center of vision, the picture will be an ellipse, which is the most common form of the perspective drawing of the circle.

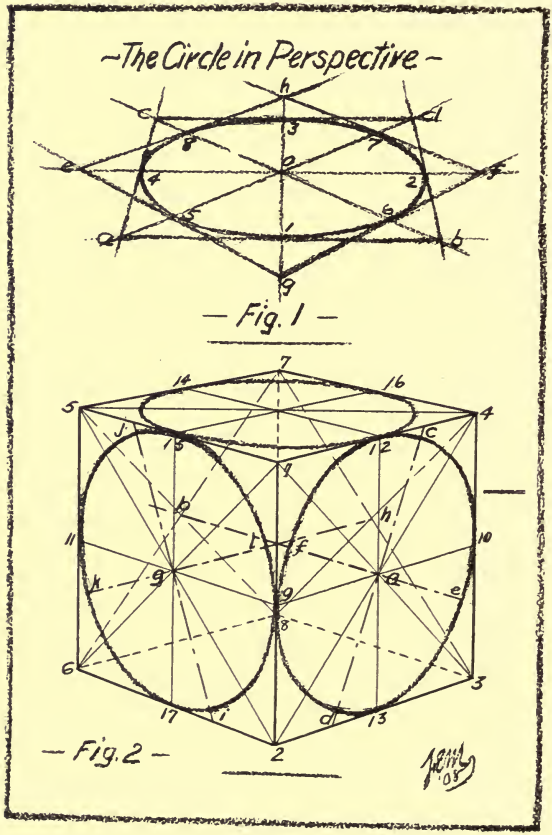

PLATE VII.

Figure 1, shows a circle lying in a horizontal position and enclosed in two similar squares, one with edges parallel with the picture-plane, and the other with edges at 45 degrees to the picture-plane. The pictures of the squares are different, while the circle remains unchanged in appearance in regard to the position of the squares, and it would not change its appearance if the squares were represented at other angles. It may be noted in Figure 2, that the axes of the ellipses in perspective do not coincide with the diameters or diagonals of the squares enclosing them. If in Figure 1, the line, *hg*, is assumed to be an axis of revolution perpendicular to the plane of the circle and squares, the major axis of the ellipse is perpendicular, and the minor axis of the ellipse coincides with this axis of revolution of the circular plane. This illustrates the following rule which is of general application in sketching the circle.

"*An ellipse which is the picture of a circle should have its minor axis coincident with a line which is the picture of the axis of revolution of the circular plane. The major axis of the ellipse should be perpendicular to the line representing the axis of revolution of the circular plane.*"

In Figure 2, the axes of revolution of the two vertical circular planes are the lines, *ab* and *gh*. The minor axes, *ef* and *kl*, coincide with the axes of revolution and the major axes, *cd* and *ij*, are perpendicular to them.

There is one important factor which must be noted in drawing the picture of concentric circles. In Figure 3, each circle is circumscribed by a square, and both squares have the same picture of the center, but the major axes of the ellipses representing the circles do not coincide with the diameter of the square or with

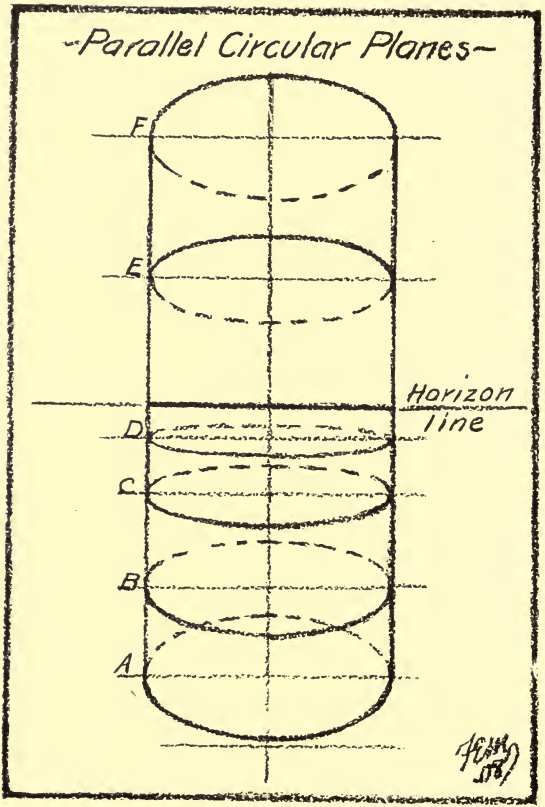

PLATE VIII.

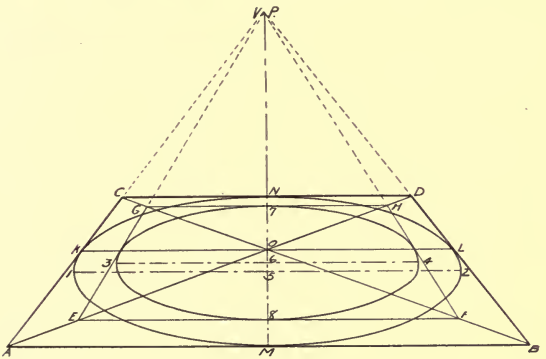

FIGURE 3

each other. This is because of the fact that objects appear smaller the farther they are away. The distances between the curves are equal at the ends of the major axes, because these distances are parallel with the picture-plane, but the space at the extreme farther end of the minor axis appears less than that at the nearer end. This difference may not always be apparent and it depends upon the relative sizes of the circle and the position of their planes. If a subject has many concentric circles and the difference in size is not very great, it is allowable to ignore this difference, which simplifies the construction of the sketch.

PLATE VIII, illustrates the different apparent widths of parallel circular planes as they vary in distance from the eye-level or horizon line. Note the fact that the farther away from the horizon line, the greater is the length of the minor axes in proportion to the length of the major axes of the ellipses.

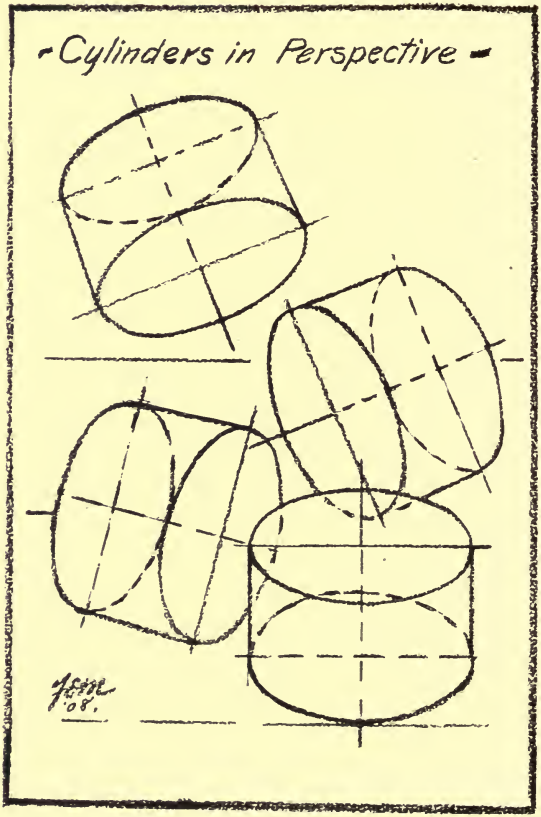

PLATE IX.

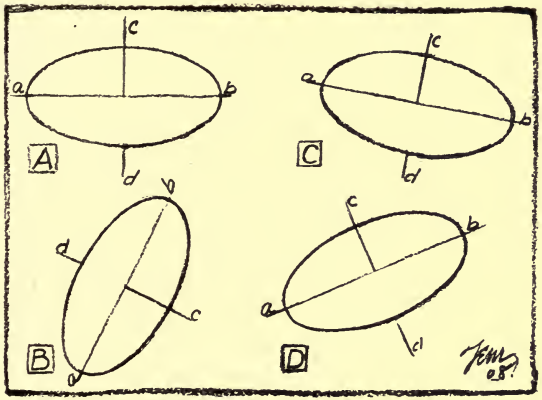

FIGURE 4.

PROBLEM 4. Sketch circles in several positions as suggested in Figure 4.

PROBLEM 5. Sketch two concentric circles, the diameters of which are 3″ and 4½″ respectively.

8. The Cylinder in Perspective. Figure 2, PLATE VII, shows the circle as it appears on three faces of a cube in perspective. The axes of the circular planes, carried through to the corresponding points in the opposite faces of the cube, are perpendicular to the major axes and coincide with the minor axes of the ellipses.

It is sometimes very convenient to locate a cylinder in perspective by first drawing a square prism, for then the axis of the cylinder coincides with the axis of the square prism. (See Figure 4, PLATE XVI.) The direction of the axis of the cylinder in perspective is usually determined first, because this is the axis of revolution

of the circular planes at the end of the cylinder, and from this, the direction of the major axes of the ellipses representing these circular planes is determined by the rule for sketching circles in perspective, which states that the major axes should be perpendicular to the axes of revolution.

PROBLEM 6. Make a sketch showing a cylinder divided into circular planes as in PLATE VIII.

PROBLEM 7. Sketch cylinders, 2″ diam., 4″ long, in the several positions suggested in PLATE IX.

9. Estimating Measurements. In order to sketch at once the fundamental lines of an object, it is necessary to have a definite idea of the appearance of plane angles from different points of view. In PLATE II, the different planes shown in the drawing of the square prism, are all seen at varying distances above and below the horizon line. The retreating edges of each plane are known to be at the same angle to the picture-plane, yet they do not so appear in the drawing because the eye is seeing each plane at different levels.

The foreshortening of lines and the perspective value of angles may be determined by drawing a circle, dividing it into any number of parts, each representing a definite number of degrees, and then placing it in a horizontal position, obliquely to the line of vision, at any distance below the eye. The upper half of Figure 5, (which is an orthographic projection of such a circle) may be assumed to be a perspective view of a circle. The diameter, *o–18o*, is parallel with the picture-plane, and the vanishing-point may be considered as being at an infinite distance from the observer. The long axis represents the length of the line when parallel with the picture plane; the short axis determines the extreme foreshortening of the line when perpendicular to the picture-plane. The divisions from *o* to *90* show the

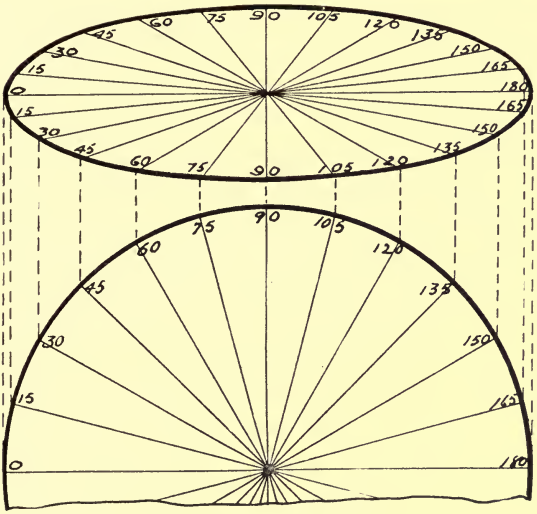

FIGURE 5.

varying lengths, or foreshortening, of the radii of the circle as they appear at different angles to the picture-plane.

The upper portion of Figure 5 may be called an "ELLIPTICAL" or "PERSPECTIVE PROTRACTOR" which can be utilized as a means of *approximately* measuring plane angles and foreshortening of lines and plane angles. For this purpose, it is of great assistance in sketching from working drawings, to have such an elliptical protractor, which may be cut from cardboard, graduated into 15 degrees divisions. The proportion of the length of the major axis to that of the minor axis in an elliptical protractor giving satisfactory picture

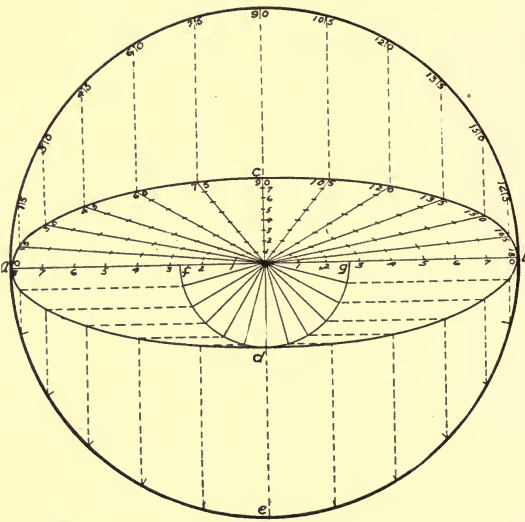

FIGURE 6.

results in perspective is about one to three. Figure 6, illustrates the projection of the circular protractor in order to obtain an elliptical protractor having these proportions.

10. The Elliptical Protractor. FIGURE 6. To make an elliptical protractor for use in perspective sketching, lay out the major and minor axes, *ab* and *cd*, and, at the intersection of these axes for a center, draw circles with the axes as diameters. Divide the outer circle into 24 equal parts, the spaces each measuring an angle of 15 degrees. Radial lines from these divisions on the outer circle divide the inner circle into the same number

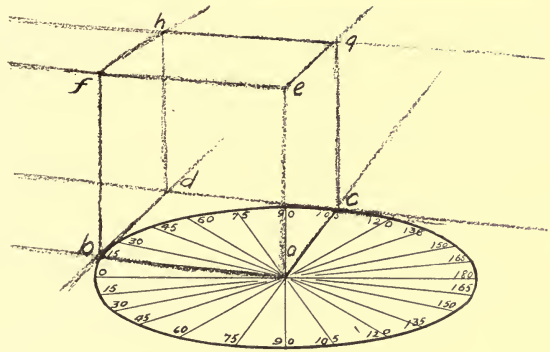

FIGURE 7.

of parts. If from the points on the outer circle, vertical projection lines are drawn, intersecting horizontal projection lines from corresponding points where the radial lines divide the inner circle, the intersections will give the points through which the circumference of the ellipse may be drawn. The intersections of these horizontal and vertical projection lines are the division points on the circumference of the ellipse for each angle of 15 degrees which should be numbered from *0* to *180*. By dividing the major axis into a certain number of equal units and then dividing each radius of the ellipse into the same number of equal units as in the horizontal radii, the approximate foreshortening of each radius and any fractional part of that radius at any given angle may be determined.

Figures 7, 8 and 9 show the appearance of a cube in three different positions at different angles to the picture plane, located by using the elliptical, or as we shall call it hereafter, the perspective protractor. Figure 7 shows the cube with the front face at an angle of 15 degrees

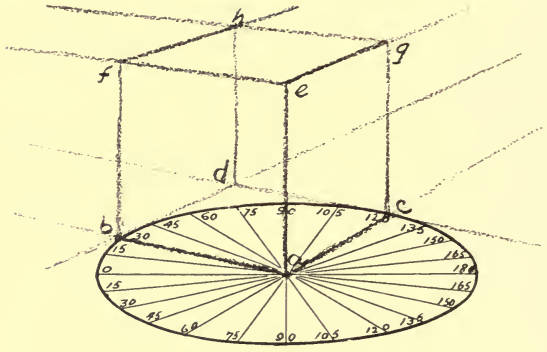

FIGURE 8.

to the picture-plane. The visible face perpendicular to the front face at 15 degrees will thus be at 75 degrees to the picture-plane or 105 degrees on the protractor. Figure 8, shows the cube with the front face turned

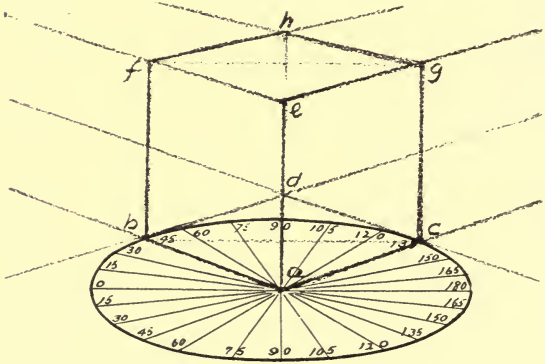

FIGURE 9.

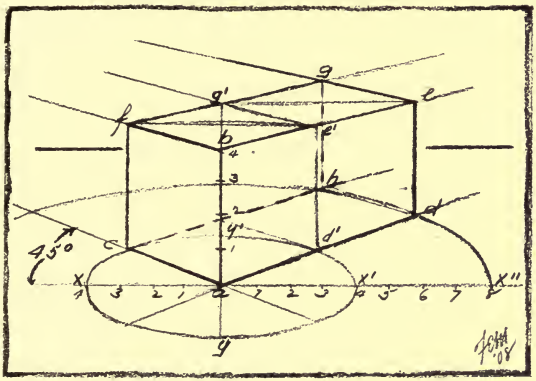

FIGURE 10.

arther away, an at angle of 30 degrees, thus making he vertical face which is perpendicular to the front face t an angle of 60 degrees to the picture-plane. Figure 9, shows both faces of the cube at 45 degrees o the picture-plane. This position shows the greatest possible perspective width of a cube, and is the one usually assumed for the perspective position of a cube used as a unit in developing a perspective sketch from working drawing. If it is required to make a drawing which has lines longer than those of the protractor, a parallel perspective circle may be sketched which shall be proportionately larger than the protractor, but this s not altogether necessary, for the perspective angles having been obtained by using the perspective pro-tractor, the line may be extended a distance proportion-ate to the length of the lines of the protractor. This is illustrated in Figure 10 which represents a draw-ng of a rectangular prism which is as high as it is wide and whose length is twice that of its height. It must be

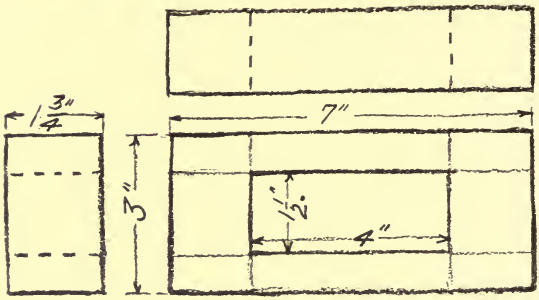

FIGURE 11.

remembered that *all measurements are wholly approximate*, and that the protractor is used simply as a help in estimating the perspective foreshortening and position of lines and angles. In all perspective sketching, good judgment in estimating measurements is the important thing to be emphasized.

11. The Rectangular Prism in Perspective. PROBLEM 8. Sketch a rectangular prism in perspective similar to that in Figure 10, in two different positions. The proportions may be 6″ by 2″ by 1″.

PROBLEM 9. Make a sketch in perspective from the working drawing in Figure 11. This working drawing represents a rectangular prism through the center of which is a rectangular hole. By extending the lines representing the hole to the outside rectangle in the front view, there are two series of parallel lines, one a vertical series, and the other a horizontal series. If the sketch is started by drawing the front vertical edge, (See Figure 1, PLATE X) the location of each of the lines in the horizontal series may be measured on this

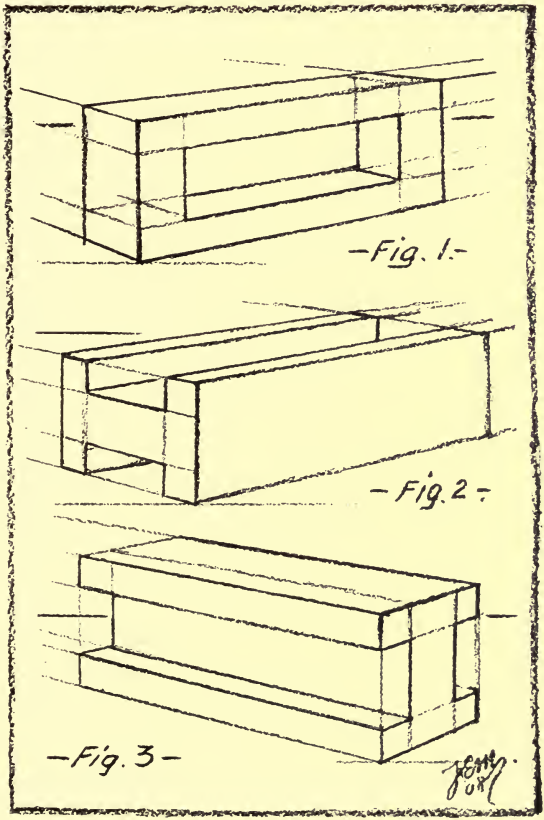

PLATE X.

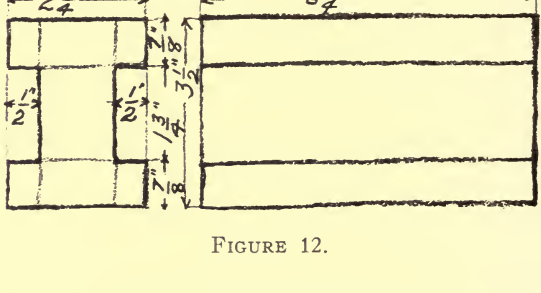

FIGURE 12.

edge and the lines sketched retreating to a common vanishing-point which is at an indefinite distance away from this nearest edge. The position of each line of the vertical series may be measured on the upper edge of the front face and these lines sketched in their proper locations. The lines of the back face may be determined in the same way. The sketch may be completed by erasing the construction lines and strengthening the outlines of the prism and hole.

PROBLEM 10. Make a sketch of the grooved block from the working drawing of the block, Figure 12. This is another good illustration of measuring by means of parallel lines, for the lines of the groove are parallel with the outside edges of the block. After sketching the rectangular block, the lines of the groove may be located on the end of the block and the groove sketched as shown in Figures 2 and 3, PLATE X.

PLATE XI. Figure 1, represents a rectangular card resting on a cube, the vertical faces of which are at 45 degrees to the picture-plane. One end of the card rests on the same plane as that of the base of the cube. After the cube is sketched, the location of points *1* and *3* of the card may be determined by extending the lines, *ab* and *a'b'*, in the direction in which it is desired to

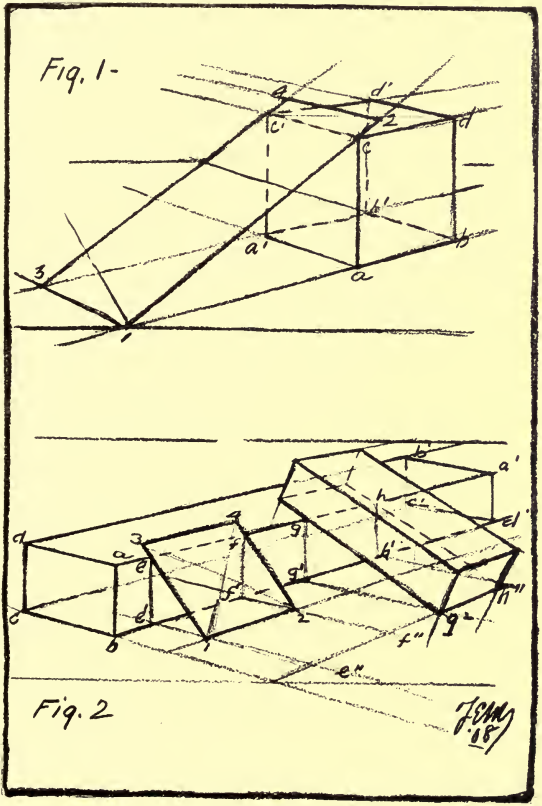

PLATE XI.

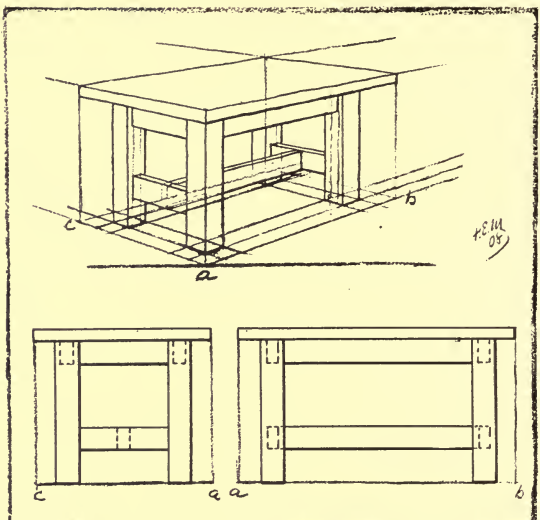

FIGURE 13.

place the lower edge of the card. When point *1* is located, then sketch the line, *1-3* converging with *aa'* and *bb'*. Sketch the side lines of the card from *1* through *c* and from *3* through *c'* and locate *2* and *4* by cutting the lines, *1c2* and *3c'4* with a line converging with *cc'*, which completes the drawing of the card.

PROBLEM 11. Sketch a group consisting of a cube and two rectangular prisms as suggested in Figure 2, PLATE XI. The sketch of the square card in this figure may be considered the base of the cube.

Figure 13 is a good illustration showing the use of a rectangular prism as a unit in making a perspec-

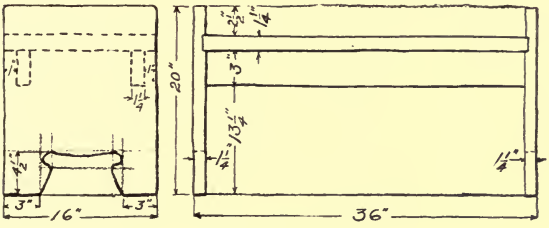

FIGURE 14.

tive sketch of the table. After sketching the prism, the positions of the bases of the legs of the table may be located by measuring the lines *ab* and *ac*, and sketching each system of retreating parallel lines.

PROBLEM 12. Sketch in perspective, the bench represented by the working drawing in Figure 14.

12. The Equilateral Triangle in Perspective. PLATE XII. Figures 1 and 2 are the working drawings of an equilateral triangular prism to be sketched in perspective with the end faces at an angle of 45 degrees to the picture-plane. After locating the line, *ac*, in Figure 3, with the perspective protractor, draw *cx*, equal in height to the altitude of the triangle. The point, *e*, is at the perspective center of *ac*, and a perpendicular from this point, parallel with *cx*, and cut by the line, *xy*, converging with *ac*, determines the altitude of the triangle, *eb*. Connecting *ab* and *ac* completes the equilateral triangle in perspective. The line, *cc'*, is perpendicular to *ca*, and the proportions of the sketch show it to be about twice as long. Retreating converging lines from *a*, *b*, and *c* of the front end of the block aid in determining the position of the points, *a'*, *b'*, and *c'* of the farther end of the block. Figure 5 shows the end of a triangular prism of which the perspective is

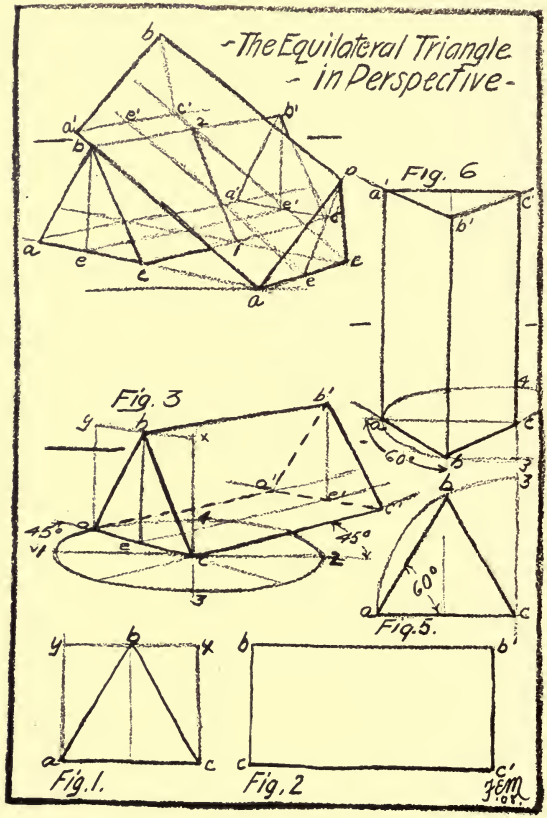
-The Equilateral Triangle
- in Perspective -
Fig. 6
Fig. 3
Fig. 5.
Fig. 1.
Fig. 2
60°
45°

PLATE XII.

shown parallel with the ground-plane in Figure 6. Using the perspective protractor, the positions of the corners, *a*, *b* and *c*, may be determined, and the lines, *ab*, *bc* and *ca* represent the perspective view of the lower end of the block. The block may be completed as shown in Figure 6, by drawing vertical lines from *a*, *b* and *c*, and the lines, *a'b'*, *b'c'* and *c'a'*, of the top of the block.

PROBLEM 13. Sketch in perspective, two equilateral triangular prisms of equal size, following the construction and in the positions shown in the sketch in the upper part of PLATE XII.

13. The Hexagon in Perspective. PLATE XIII. Figure 1 of this plate illustrates some of the peculiar properties of the hexagon. There are six equilateral triangles in this figure. The diagonals are twice the length of a side, and each diagonal is parallel with two opposite sides. There are three series of parallel lines, and the lines connecting the ends of opposite sides divide the diagonal equally between the center and the ends of the diagonal to which they are perpendicular. It may be inscribed in a circle, which makes the perspective sketching of the hexagon a simple matter.

Figure 2 is a perspective sketch of the hexagon directly in front of the observer and located below the level of the eye. The diagonal, *eb*, is parallel with the picture-plane. Each series of retreating parallel lines, *ab*, *fc*, *ed*, and *fe*, *ad*, *bc*, should show slight convergence toward the vanishing-points in the direction taken by the series.

Figure 3 illustrates the perspective of a hexagonal prism resting on an end face with the front side parallel with the picture-plane.

In Figures 4 and 5, the hexagon is built up from one of its sides, *af*. After locating *af* with the perspective protractor, sketch the height lines, *ac* and *fd*, of

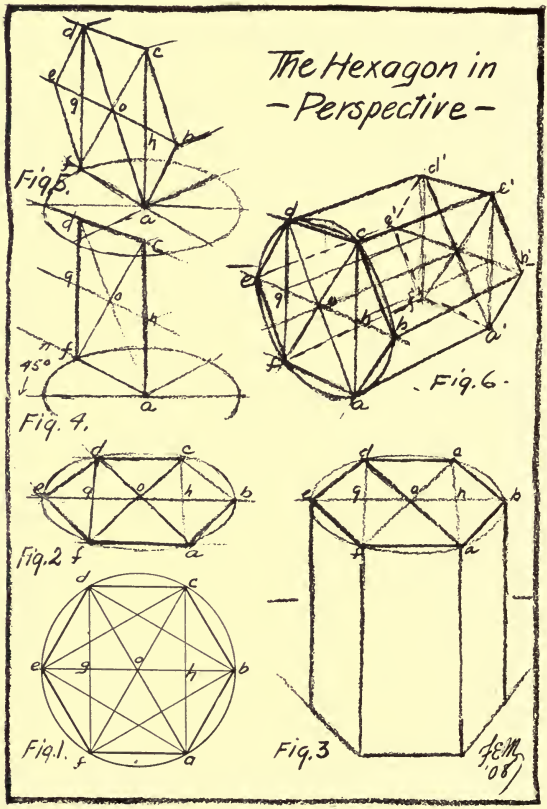
The Hexagon in
— Perspective —
Fig. 5.
Fig. 4.
45°
Fig. 6.
Fig. 2
Fig. 1.
Fig. 3
FEM '08

PLATE XIII.

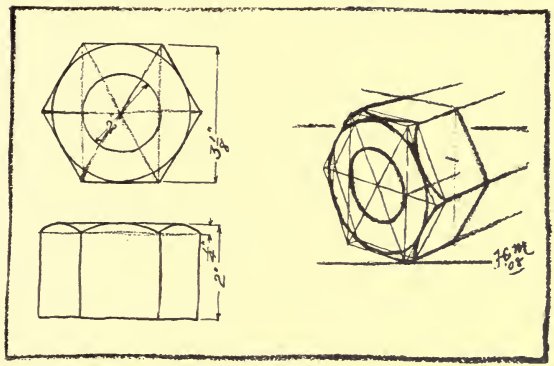

FIGURE 15.

the rectangular figure, *acdf*, inscribed in the hexagon in Figure 1, and finish the perspective of the rectangle by sketching *cd* converging with *af*. Sketch the diagonals, *ad* and *cf*, obtaining the perspective center, *o*, of the rectangle through which the line, *hg*, is sketched, converging with *af* and *cd*. In Figure 1, the spaces, *eg*, *go*, *oh*, and *hb*, are equal, but in sketching the hexagon, the spaces should each have slight foreshortening as they retreat from the picture-plane. This foreshortening may be taken care of in Figure 5 by making *bh* a little longer than *ho* and *ge* a little shorter than *og*. The lines connecting *ab*, *bc*, *de*, and *ef* finish the sketch of the hexagon.

In Figure 6, the axis of the hexagon is determined and a perspective circle sketched which will circumscribe the hexagon. The major axis of the perspective circle is one of the diagonals, and locates two corners, *a* and *d*, of the hexagon. The corners, *f* and *c*, are located by sketching parallel vertical lines from *a* and *d*. Sketch the diagonals, *ad* and *cf*, and locate *e* and *b* by

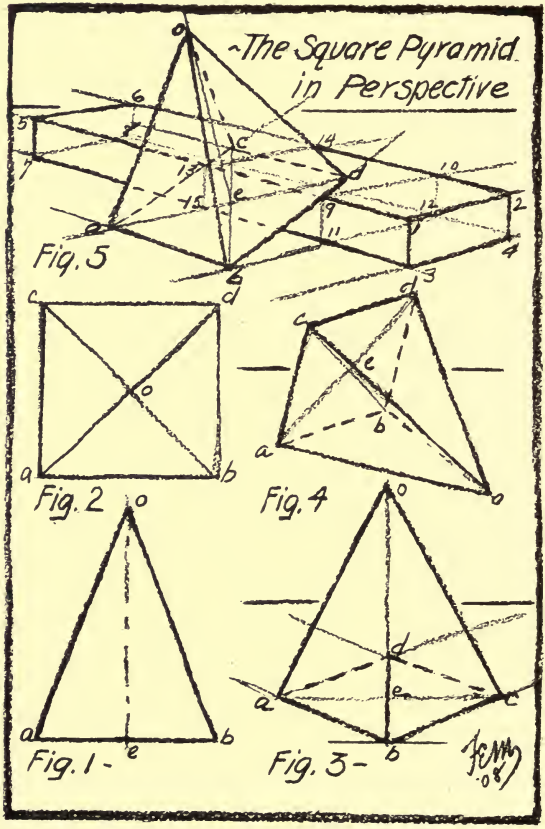

PLATE XIV.

drawing a line through *o* which converges with *af* and *cd*.

PROBLEM 14. Sketch a hexagonal prism in perspective, following construction represented in Figure 6, PLATE XIII.

PROBLEM 15. Sketch the hexagonal nut represented in Figure 15, in three different positions.

14. The Square Pyramid in Perspective. PLATE XIV. After sketching the base of the pyramid in any desired position, the location of the axis may be approximately determined by sketching it perpendicular to the longer diagonal of the base at the intersection of the diagonals. The foreshortening of the axis may be measured by estimating its length in comparison with the side of a rectangular plane passing through the axis, perpendicular to the base, and the size of this plane determined by its proportion to the base. Figure 3 represents the pyramid with the edges, *ab* and *bc*, of the base at 45 degrees to the picture-plane. Sketching the base, *abcd*, and its diagonals, the axis, *oe*, is found to be perpendicular to *ac* at *e*. Figure 4 represents the pyramid resting on one of the triangular faces, *aob*.

PROBLEM 16. Make a sketch of a square pyramid with the base resting on the edge of a rectangular prism as in Figure 5, PLATE XIV.

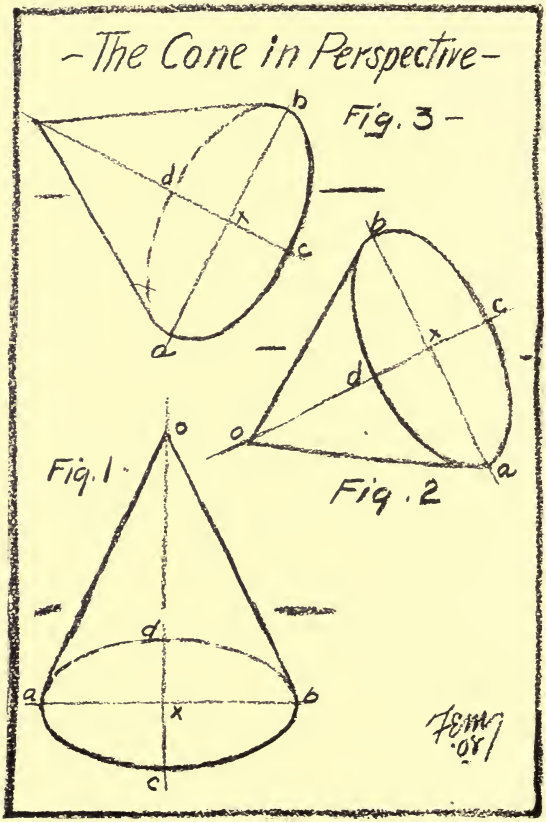

PLATE XV.

15. The Cone in Perspective. PLATE XV. In sketching the cone in perspective, the same construction that is used in sketching the cylinder is followed. After determining the direction of the axis of the cylinder, and sketching the ellipse representing the base, the side lines are sketched from the apex at the end of the axis and always tangent to the circumference at the base.

PROBLEM 17. Sketch a cone with a base $2\frac{1}{2}''$ diameter, height $4\frac{1}{2}''$, in the several positions suggested in PLATE XV.

16. Sketching from Working Drawings. It must be remembered that the working drawing represents a collection of facts shown in several views, each relating to a certain number of these facts. The drawing is made according to the principles of orthographic projection. The views are really projections, not pictures, and as many such projections must be made as are necessary to represent the object so clearly and completely that a workman may make it exactly as it is intended to be without any other directions than those contained in the working drawings. Each projection shows its particular side of the object. While several projections are necessary to completely represent the object in a working drawing, the perspective sketch must have all the facts contained in these different projections brought together and represented in one view. This is illustrated in all of the previous problems. A knowledge of typical forms, their appearance in working drawings, and also their appearance in perspective is necessary, for it is the only available requisite information of value in sketching. A working drawing representing any machine or architectural construction, can be analyzed into units of the familiar typical forms, as the square prism, cube, rectangular prism, or cylinder. Usually, there are but three directions taken by the different series of parallel lines in the unit, and generally one of these series consists of vertical lines, so that the other two series are the ones to be considered for convergence and perspective foreshortening of lines. The perspective sketch may be located by drawing the outside lines of the series, and if the convergence and foreshortening are taken care of in these outside lines, the position of all other lines parallel with and lying between them, is more easily determined. It is therefore necessary, when sketching from working drawings made up of several forms, to have a method which will lead quickly to accurate results.

The problems already considered are simple working drawings analyzed into a single unit, such as the cube or rectangular prism. This unit has been used as a basis for the foreshortening of plane surfaces and lines. By cutting the surfaces with several series of parallel lines and taking away from the unit certain portions, the changes necessary to give the final sketch result have been obtained. When a working drawing can be analyzed into a number of different typical forms, then one of these forms should be used as a unit in determining the proportions of the sketch. This division of the working drawing requires careful judgment in reducing is to the simplest typical forms in which the perspective principles can be readily carried out.

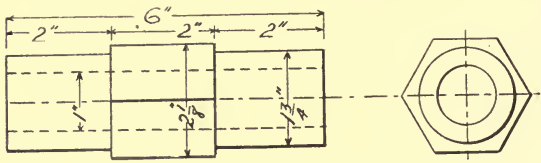

FIGURE 16.

PROBLEM 18.

Hollow Sleeve. PLATE XVI. The working drawings, Figures 1 and 2, represent a hollow sleeve which may be analyzed into the forms of a square prism and cylinder. The lines, *1-2* and *3-4*, in Figure 2, form a rectangle which is one side of a square prism, the end of which is shown in Figure 1. Figure 3 is the perspective sketch of this square prism with the vertical faces at 45 degrees to the picture-plane. The axis, *ab*, of the cylinder is located by connecting the intersection of the diagonals in the top and lower faces. The square prism at the center of the sleeve is determined by measuring its location on the front vertical edge and sketching a series of parallel lines defining its position. The major axes, *cd*, of the ellipses representing the various circular planes of the cylinder, coincide with the long diagonals of the square planes in this figure. Figure 4 is a sketch of the sleeve in a horizontal position. Sketch the square prism enclosing the sleeve and locate the axis of the prism which coincides with the axis of the sleeve. Note that the major axes, *cd*, of the ellipses are all perpendicular to the axis, *ab*, and also that these major axes do not coincide with either diameters or diagonals of the square.

PROBLEM 19. Sketch the Hollow Sleeve, Figure 16, showing the axis at 30 degrees to the picture-plane and parallel with the ground-plane.

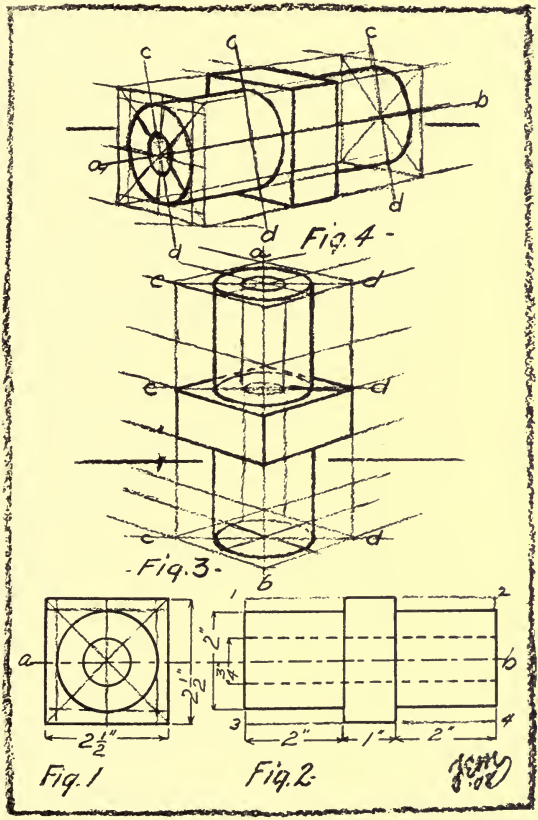

PLATE XVI.

UNIVERSITY OF CALIFORNIA
SANTA BARBARA COLLEGE LIBRARY

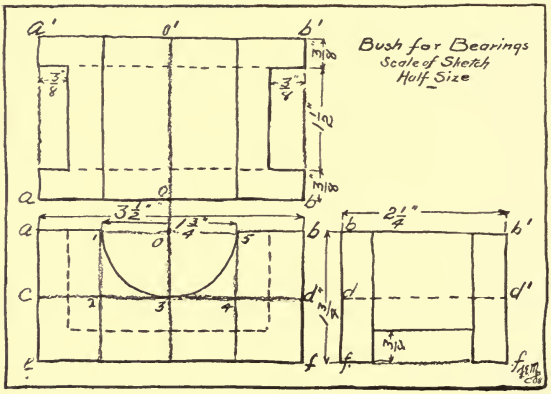

FIGURE 17.

PROBLEM 20.

Bush for Bearings. PLATE XVII. Sketch the construction lines represented in the working drawing, Figure 17, and note the series of parallel lines thus indicated. In Figure 1, the rectangular prism which serves as a unit for this sketch, is located by the perspective protractor at 45 degrees to the picture-plane. The construction lines in the working drawing divide the front view into a number of squares which are of assistance in making the perspective sketch. Continue the vertical lines, *2-1* and *4-5*, and obtain the vertical square in perspective by sketching the line, *8-7* converging with *ab*. From *o*, the axis, *oo'*, of the cylinder converges with the lines, *aa'* and *bb'*, of the prism. After locating the major axis of the ellipse, perpendicular to the axis of the cylinder, sketch the ellipse representing the end of the circular groove in the bearing. Converging lines from *1* and *5* locate points, *1'*

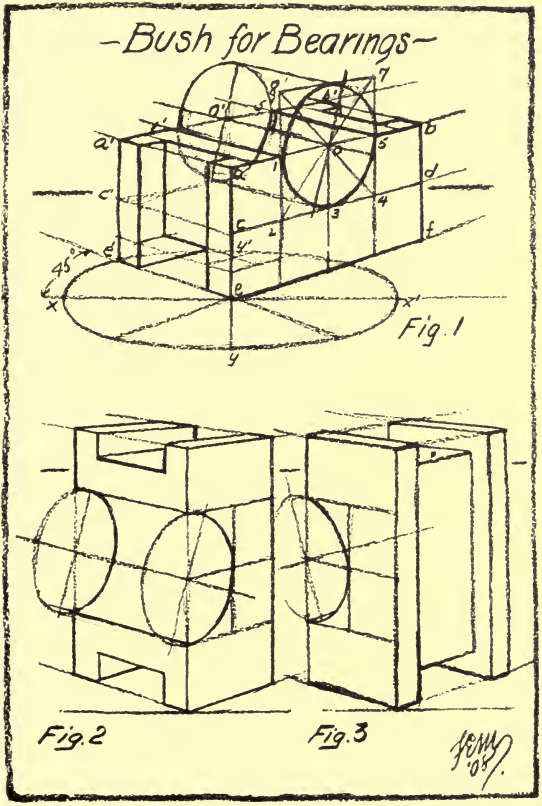

PLATE XVII.

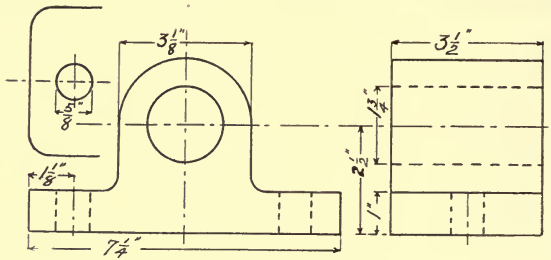

FIGURE 18.

and 5′, on the farther edge of the prism. The sketch is completed by drawing any other necessary lines, care being taken to see that they converge with the outside lines with which they are parallel in the object.

PROBLEM 21.

Make a sketch of Bearing, Figure 18, with the longer side of the base at 45 degrees to the picture-plane.

PROBLEM 22.

Grooved Block. PLATE XVIII. This plate is an excellent example of measuring by the intersections of two series of parallel lines. The positions of the corners of the groove with inclined sides are readily measured on the nearest line, (*ab*, Figure 3). The converging lines from the points on this line, intersected by the construction line parallel with *ab*, determine the location of the corners of the groove in the end face of the block. The rectangular grooves are located in the same way in the top of the block.

PROBLEM 23.

Sketch the grooved block with the upper face showing the inclined groove and parallel with the ground-plane.

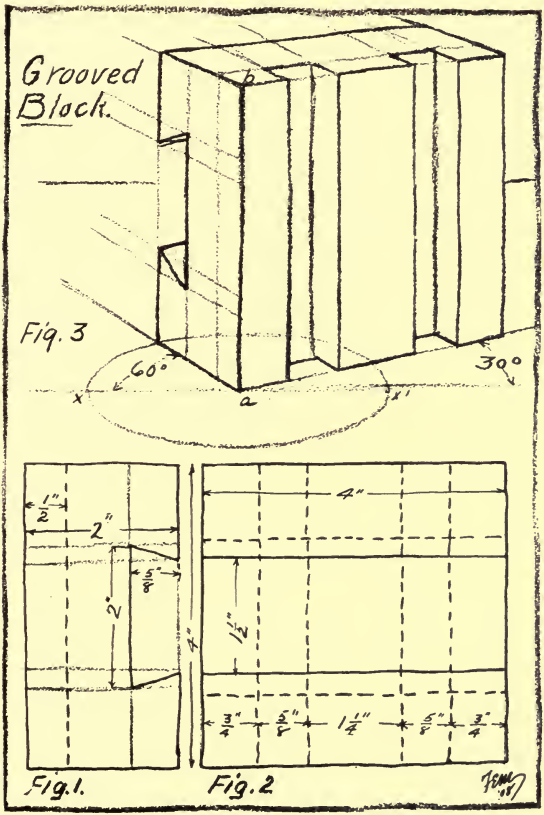
Grooved Block.
Fig. 3
60°
30°
x
x'
a
b
1/2"
2"
5/8"
2"
4"
4"
1 1/2"
3/4"
5/8"
1 1/4"
5/8"
3/4"
Fig. 1.
Fig. 2

PLATE XVIII.

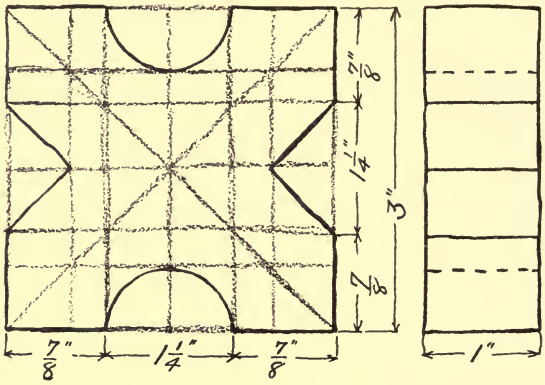

FIGURE 19.

PROBLEM 24.

V Block. PLATE XIX. Sketch the construction lines shown in Figure 19, and measure distances on the nearest line of the rectangular prism in Figure 1 of this plate. Note the direction of the axes of the circular grooves in fixing the direction of the major axes of the ellipses representing the ends of the grooves.

PROBLEM 25. Sketch the V Block, Figure 19, in the two positions suggested in Figure 2 of this plate.

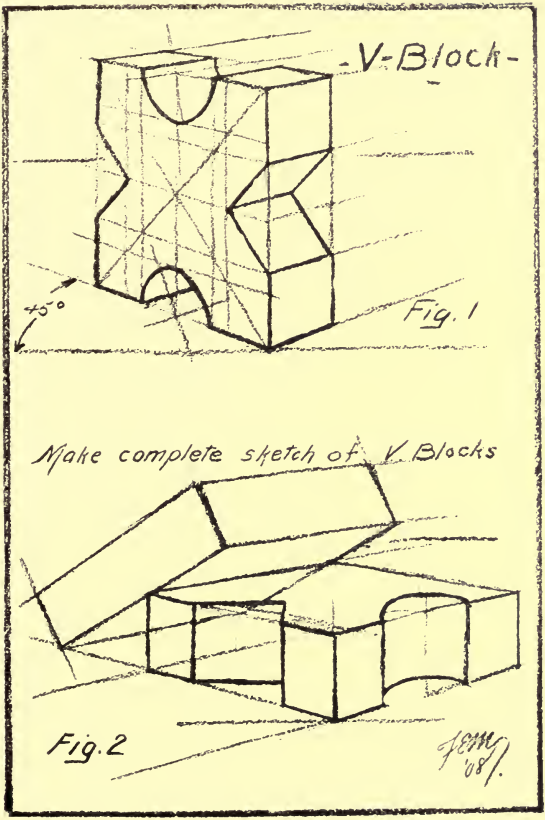

PLATE XIX.

PROBLEM 26.

The Crank. PLATE XX. When the cylinder is the most common form in a working drawing, it is sometimes more convenient to first determine the position of the axes of the cylinders and build up the sketch from the cylindrical forms. The analysis of Figures 1 and 2 shows two cylinders connected by a rectangular prism, of which the lines, *ae*, *ef*, *fb*, and *ba*, form one side in Figure 2. The lines, *ae*, and *bf*, in Figure 2, are tangent to the two cylinders at the ends of their horizontal diameters. The points, *1*, *2*, *3*, and *4*, in Figure 1, are corners of a square enclosing the circle, which in Figure 3, determines the size of the ellipse sketched tangent to the sides of the perspective square. The end faces of the cylinders are parallel with the ground-plane, and so the major axes of the ellipses representing them will appear parallel with the picture-plane. The axis, *abc*, is perpendicular to the major axis of the ellipse at the base of the cylinder. The axis, *def*, is parallel with *abc*, and converging lines from *a* and *b* locate the centers, *e* and *f*. Sketch the ellipses and the tangents connecting them. The small ellipses at *a* and *d* represent holes in the crank, and are concentric with the larger ellipses enclosing them.

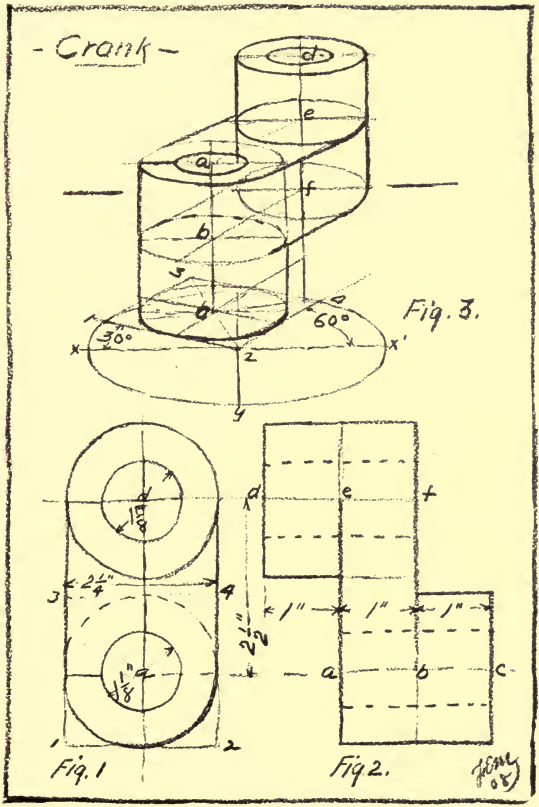

PLATE XX.

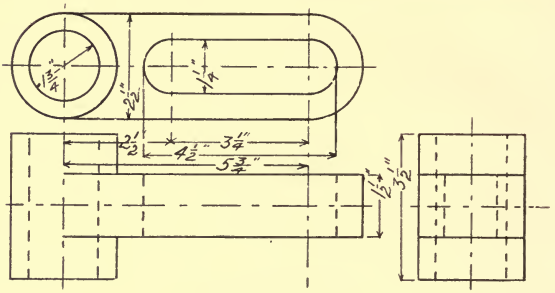

FIGURE 20.

PROBLEM 27.

Sketch the Shaft Support, Figure 20, with the cylindrical part turned at 45 degrees to the picture-plane and lying in a horizontal position.

PROBLEM 28.

Offset Standard. PLATE XXI. Sketch the end, *abcd*, of the prism and the series of parallel lines indicated by the construction lines in Figure 2. The axis, *oo'*, of the cylinder is parallel with the line, *hij*, of the base. Lines converging with the axis, *oo'*, and tangent to the ellipse on the end of the prism, determine the size of the ellipses at *1*, *2*, and *3*. Curved lines from *i*, *k*, and *l* sketched tangent to the ellipses, connect the cylinder with the base.

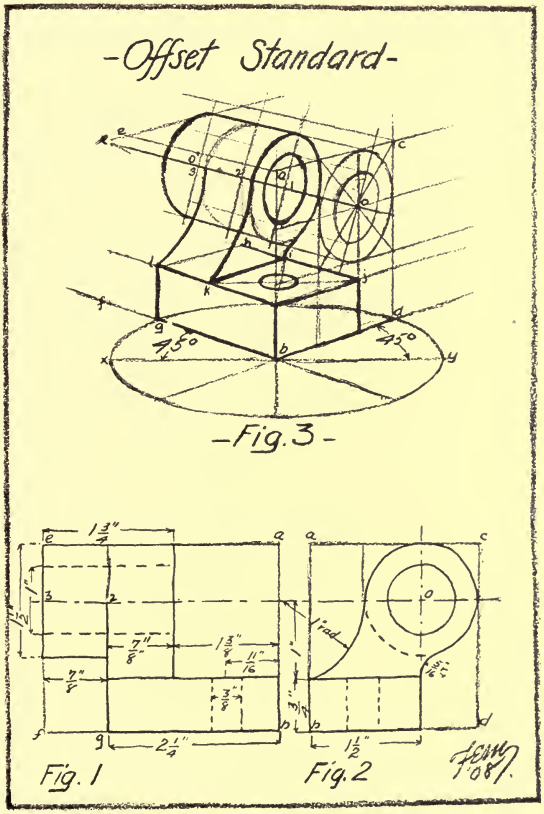
-Offset Standard-
45°
45°
-Fig. 3-
1 3/4"
1"
1 1/2"
7/8"
1 3/8"
11/16"
7/8"
3/8"
2 1/4"
1 rad.
3/16"
1 1/2"
Fig. 1
Fig. 2

PLATE XXI.

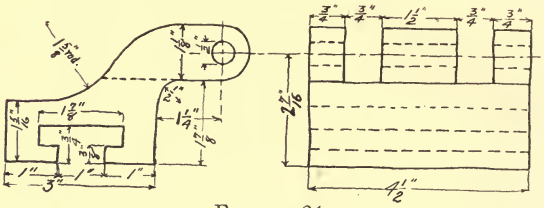

FIGURE 21.

PROBLEM 29. Sketch the Hinge-Block, Figure 21, with the face containing the T shaped groove turned at 30 degrees to the picture-plane and perpendicular to the ground-plane.

PROBLEM 30.

Angle Brace. PLATE XXII. Enclose the working drawings, Figures 1 and 2, in construction lines and note each series of parallel lines. Sketch the perspective outline of the prism, locate the axes of the cylindrical forms at each end of the brace, and draw the ellipses representing the circular ends. The diagonal indicated is a part of the major axes of the ellipses representing the curved part connecting the ends of the brace.

PROBLEM 31. Sketch the Angle Brace showing the curved part parallel with the ground-plane.

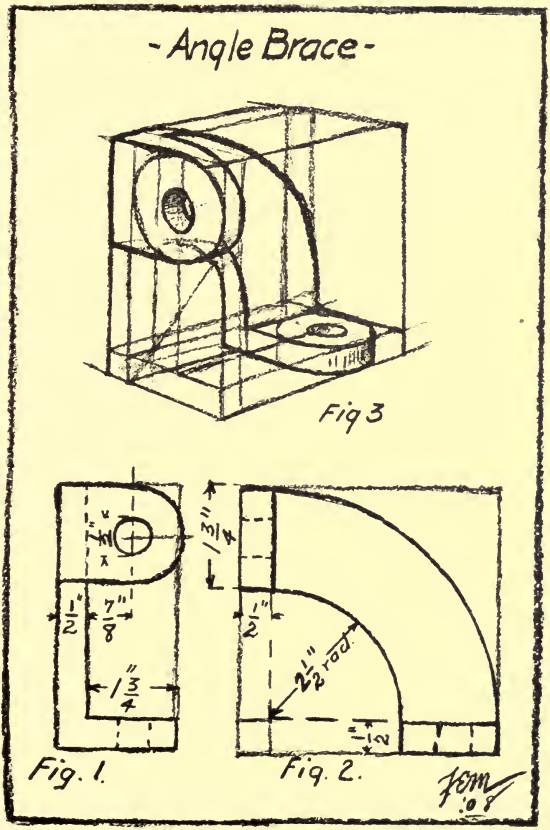

PLATE XXII.

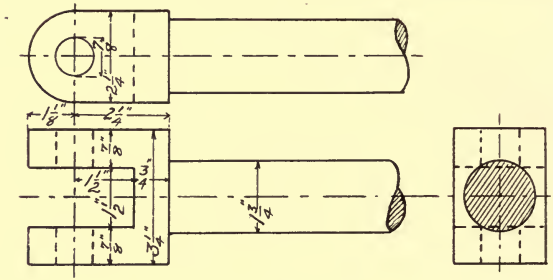

FIGURE 22

PROBLEM 32. Sketch the Connecting Rod End, Figure 22, with the axis of the cylindrical part at an angle of 45 degrees to the picture-plane and parallel with the ground-plane.

PROBLEM 33.

Intersecting Square Prisms. PLATE XXIII. The construction shown in this plate is another good example of measuring by the intersections of the two series of parallel lines. After sketching the outline of the square prism enclosing the working drawing, the ends of the prisms, *1*, *2*, *3*, *4*, and *13*, *14*, *15*, *16*, should be located. From these ends, each prism may be completed, and the lines of intersection located by connecting the points at the intersection of the edges of the prisms.

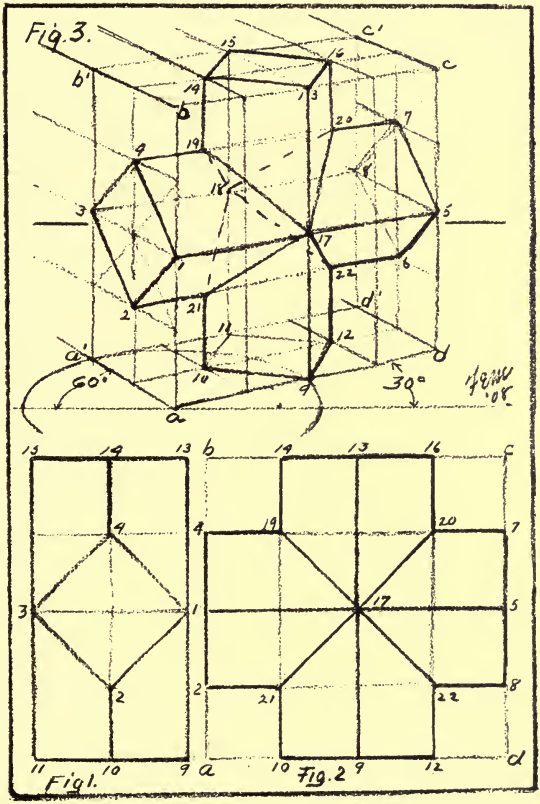

PLATE XXIII.

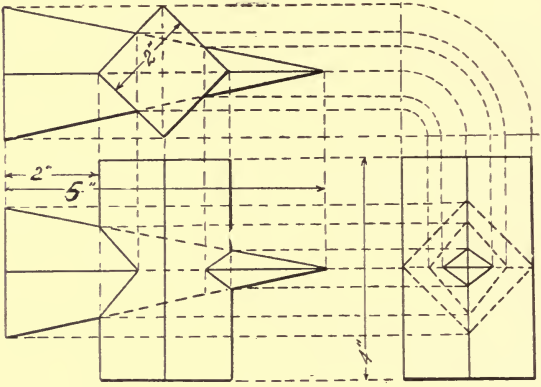

FIGURE 23.

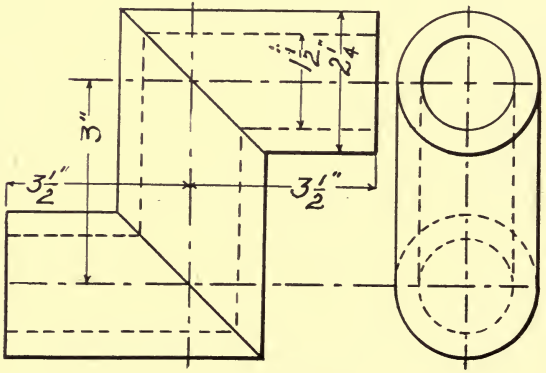

FIGURE 24.

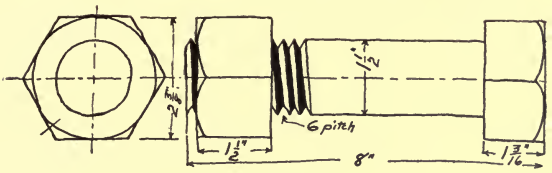

FIGURE 25.

PROBLEM 34. Sketch the Intersecting Pyramid and Prism, Figure 24, with the axis of the pyramid at 30 degrees to the picture-plane and parallel with the ground-plane.

PROBLEM 35. Sketch the Intersecting Cylinders, Figure 25, with the axes of the horizontal cylinders parallel with the ground-plane and turned at 30 degrees to the picture-plane.

PROBLEM 36. Sketch the Bolt, Figure 23, with the axis at 30 degrees to the picture-plane and parallel with the ground-plane.

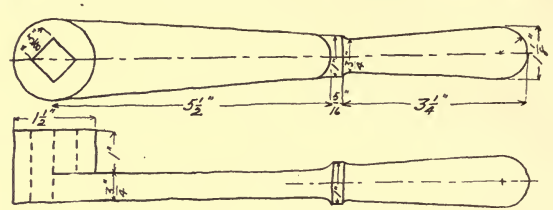

FIGURE 26

PROBLEM 37.

Crank. PLATE XXIV. Sketch the axis, *oo″*, of the larger cylinder at 60 degrees, and the line, *1-2*, at 30 degrees to the picture-plane, measuring with the perspective protractor. The perspective circle, *abcd*, determines the foreshortened appearance of the diameter, *1-2*. The major axis, *ef*, of the ellipse is perpendicular to the axis of the cylinder at *o*, and the ellipse passes through *1* and *2* of the measuring ellipse, *acbd*. The axis, *gg″*, of the smaller cylinder converges with the axis, *oo″*, of the larger cylinder. Parallel lines from *o′* and *o″* determine the location of *g′* and *g″*, and the major axes of the ellipses at the small end of the crank are perpendicular to the axis of the cylinder at points, *g*, *g′*, and *g″*. Sketch the ellipses and the tangents connecting them. Complete the drawing by sketching the small ellipses at *o* and *g*, representing the holes in the crank, concentric with the larger ellipses enclosing them.

PROBLEM 38. Sketch the crank with the axes of the cylinders perpendicular to the ground-plane and the lines, *o′-g′*, at 45 degrees to the picture-plane.

PROBLEM 39. Make a sketch of the handle, Figure 26, with the axis of the hub perpendicular to the ground-plane and the axis of the handle at 30 degrees to the picture-plane.

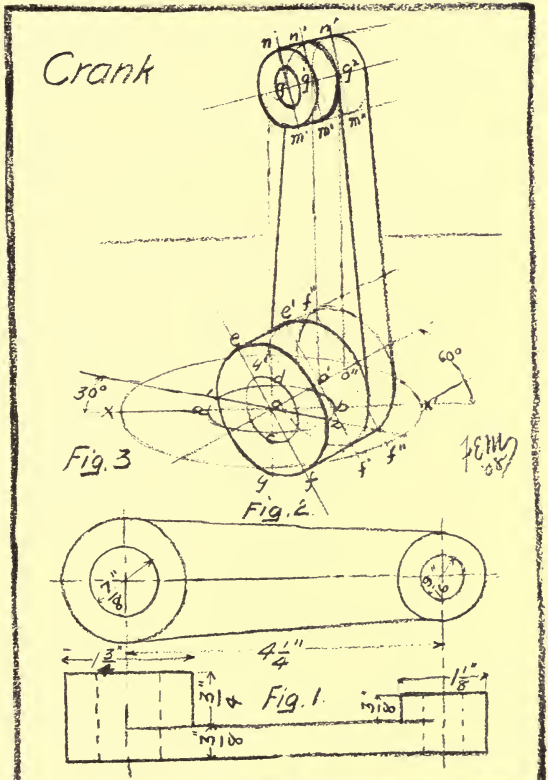

PLATE XXIV.

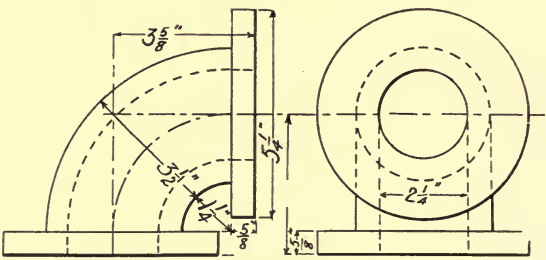

FIGURE 27.

PROBLEM 40.

Pipe-Tee. PLATE XXV. Sketch the outline of a rectangular prism that will enclose the Pipe-Tee in Figures 1 and 2, and determine the location and direction of the axes of the cylinders as indicated in Figure 3. From these axes of the cylinders, the direction of the major axes of the various ellipses may be determined and their positions located. Finish drawing, following construction suggested in Figure 3.

PROBLEM 41. Make a sketch of the Pipe-Elbow, Figure 27, resting on one of the circular ends and with the other end turned at 30 degrees to the picture-plane.

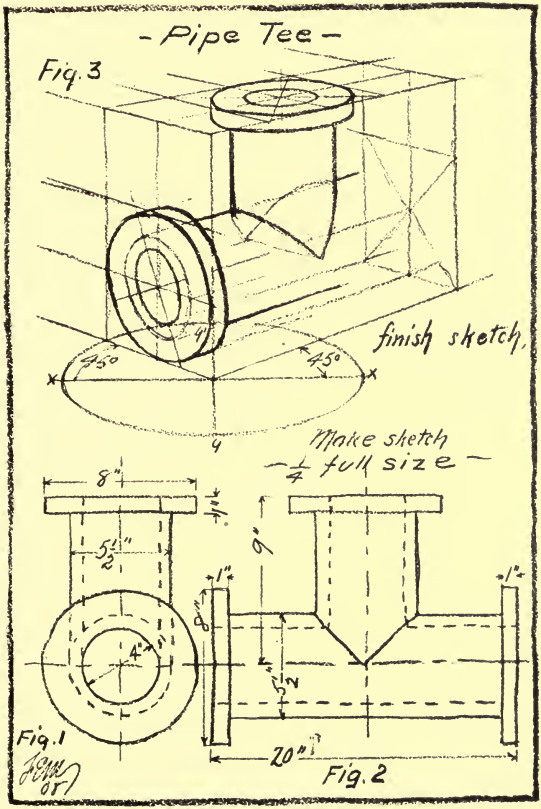
- Pipe Tee -
Fig. 3
finish sketch.
45°
45°
4"
Make sketch
- 1/4 full size -
8"
5 1/2"
4"
1"
9"
1"
1"
8"
5 1/2"
20"
Fig. 1
Fig. 2

PLATE XXV.

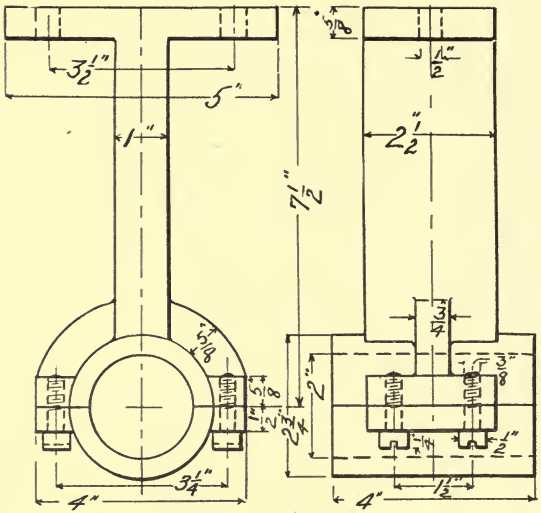

FIGURE 28.

PROBLEM 42.

Shaft Hanger. PLATE XXVI. This object should be sketched in a position above the eye-level, as represented in Figure 3. Sketch the construction lines and note the directions of the axes of the cylindrical forms contained in the working drawing.

PROBLEM 43. Sketch in a position above the eye-level, the Pipe Hanger represented by the working drawing in Figure 28.

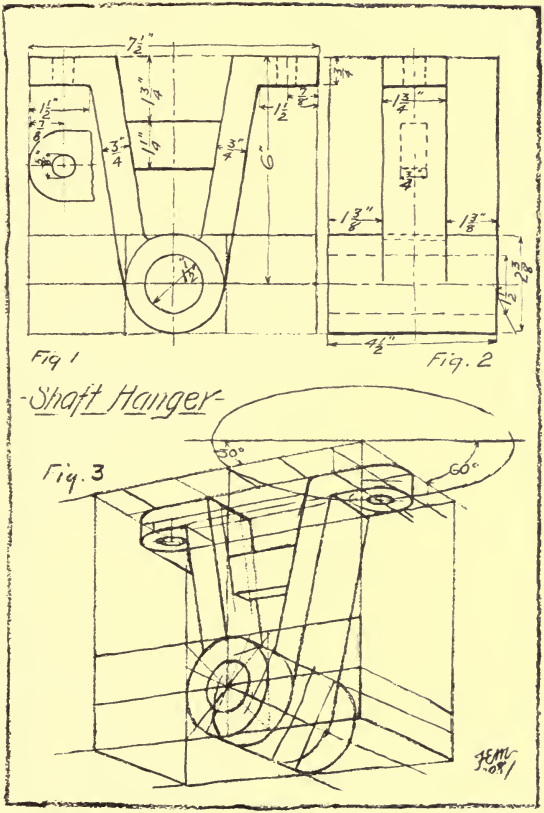

PLATE XXVI.

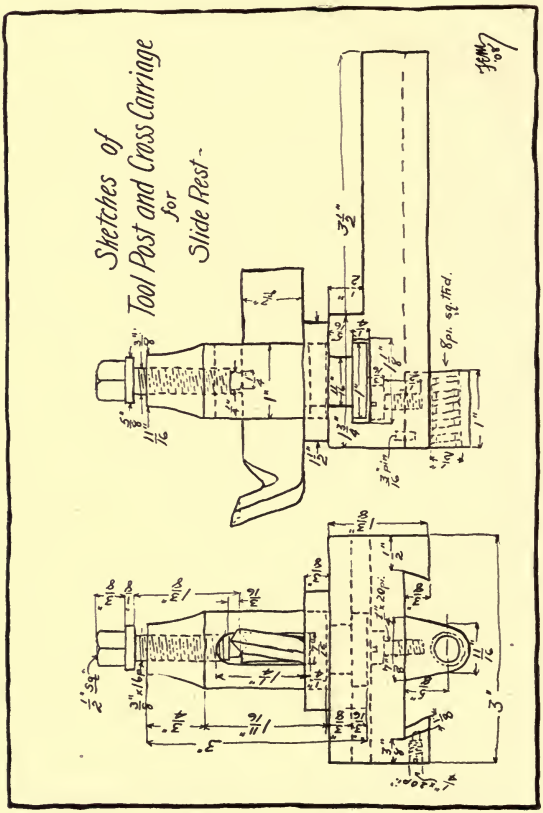

PLATE XXVII.

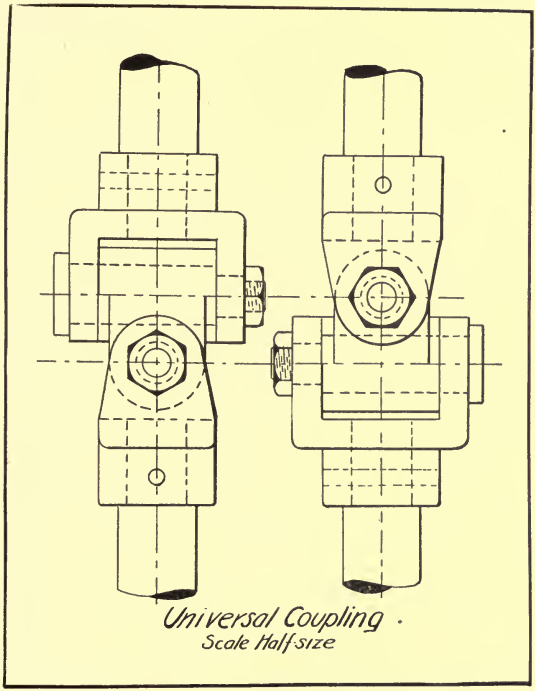

FIGURE 29.

PROBLEM 44.

Tool Post and Carriage. PLATES XXVII and XXVIII. This is more complicated than the previous problems, and the working drawing should be carefully analyzed into the different typical forms. Treat each form separately in the sketch, but locate it in its

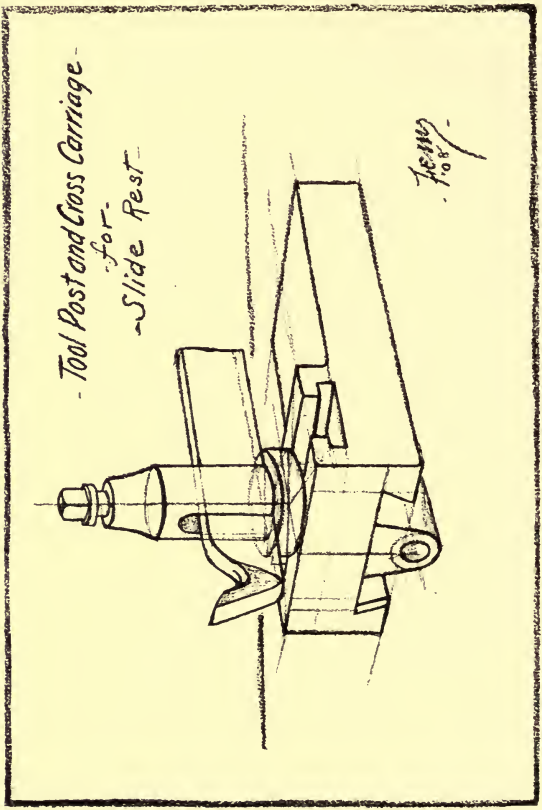

PLATE XXVIII.

relative position with the other forms, carefully considering the convergence of lines and the proportion of parts.

PROBLEM 45. Sketch the Universal Coupling, Figure 29, showing the axes of the shafts at 30 degrees to the picture-plane and parallel with the ground-plane.

3 1205 00160 7348

UC SOUTHERN REGIONAL LIBRARY FACILITY
AA 000 106 282 7

T
369
M3