This is a digital copy of a book that was preserved for generations on library shelves before it was carefully scanned by Google as part of a project to make the world's books discoverable online.

It has survived long enough for the copyright to expire and the book to enter the public domain. A public domain book is one that was never subject to copyright or whose legal copyright term has expired. Whether a book is in the public domain may vary country to country. Public domain books are our gateways to the past, representing a wealth of history, culture and knowledge that's often difficult to discover.

Marks, notations and other marginalia present in the original volume will appear in this file - a reminder of this book's long journey from the publisher to a library and finally to you.

Usage guidelines

Google is proud to partner with libraries to digitize public domain materials and make them widely accessible. Public domain books belong to the public and we are merely their custodians. Nevertheless, this work is expensive, so in order to keep providing this resource, we have taken steps to prevent abuse by commercial parties, including placing technical restrictions on automated querying.

We also ask that you:

+ *Make non-commercial use of the files* We designed Google Book Search for use by individuals, and we request that you use these files for personal, non-commercial purposes.

+ *Refrain from automated querying* Do not send automated queries of any sort to Google's system: If you are conducting research on machine translation, optical character recognition or other areas where access to a large amount of text is helpful, please contact us. We encourage the use of public domain materials for these purposes and may be able to help.

+ *Maintain attribution* The Google "watermark" you see on each file is essential for informing people about this project and helping them find additional materials through Google Book Search. Please do not remove it.

+ *Keep it legal* Whatever your use, remember that you are responsible for ensuring that what you are doing is legal. Do not assume that just because we believe a book is in the public domain for users in the United States, that the work is also in the public domain for users in other countries. Whether a book is still in copyright varies from country to country, and we can't offer guidance on whether any specific use of any specific book is allowed. Please do not assume that a book's appearance in Google Book Search means it can be used in any manner anywhere in the world. Copyright infringement liability can be quite severe.

About Google Book Search

Google's mission is to organize the world's information and to make it universally accessible and useful. Google Book Search helps readers discover the world's books while helping authors and publishers reach new audiences. You can search through the full text of this book on the web at `http://books.google.com/`

THE POWER HANDBOOKS

PIPES AND PIPING

THE POWER HANDBOOKS

The best library for the engineer and the man who hopes to be one.

This book is one of them. They are all good — and they cost

$1.00 postpaid per volume. (English price 4/6 postpaid.)

SOLD SEPARATELY OR IN SETS

BY PROF. AUGUSTUS H. GILL
OF THE MASSACHUSETTS INSTITUTE OF TECHNOLOGY

ENGINE ROOM CHEMISTRY

BY HUBERT E. COLLINS

BOILERS
SHAFT GOVERNORS
ERECTING WORK
PIPES AND PIPING
KNOCKS AND KINKS
PUMPS
SHAFTING, PULLEYS AND BELTING

BY F. E. MATTHEWS

REFRIGERATION. (In Preparation.)

HILL PUBLISHING COMPANY
505 PEARL STREET, NEW YORK
6 BOUVERIE STREET, LONDON, E.C.

THE POWER HANDBOOKS

PIPES AND PIPING

COMPILED AND WRITTEN

BY

HUBERT E. COLLINS

1908
HILL PUBLISHING COMPANY
505 PEARL STREET, NEW YORK
6 BOUVERIE STREET, LONDON, E.C.

American Machinist — Power — The Engineering and Mining Journal

---

Hill Publishing Company, New York, U.S.A.

CONTENTS

PREFACE

THIS book gives general rules for the design of high and low pressure steam piping in power plants. It gives the reader ideas as to forces to be met and the amount of resistance that can be expected from the pipe and fittings properly placed. An idea of good steam-pipe design for all size plants is given together with many useful suggestions as to the installation and operation of the same pipe installation.

The material here collected is selected from the columns of Power, where it has appeared from time to time, and the author is greatly indebted to the contributors and editors for valuable material and suggestions.

HUBERT E. COLLINS.

NEW YORK, September, 1908.

GENERAL DESIGN

I

THE successful operation of steam mains for high-pressure steam work requires, (1) good design; (2) good material; (3) skilful steam fitters. Of the first requirement there can be many modifications to suit conditions, but a few fundamental facts here stated will be of use for general application.

Up to the year 1900 the almost universal design for a piping system for power plants was to carry a pipe for each boiler into a large steam header, whose cross-section was equal to the sum of all the areas of the feeding pipes. If the designing engineer wanted to be very grand, he made it larger without knowing just why. From this header pipes were carried to the various engines, of sizes called for by the engine builder. It was quite common to place steam separators in each line leading to an engine, but fashions changed in steam-piping as well as in clothes, and with the advent of high pressure and superheated steam sizes of pipes have been very much reduced. In the four large power-houses now built in New York City, with an ultimate capacity of from 60,000 to 100,000 horse-power each, the largest steam mains are not over 20 inches in diameter, and these are used more as equalizing pipes than storage reservoirs. Some of our best plants have pipes which run from the header to the engine two sizes smaller than that called for by the engine builders. These pipes, before reaching the engine, are carried into a wrought-iron or steel receiver, which acts also as a separator. This receiver has a cubical capacity three times that of the high-pressure cylinder, and is placed as near as possible to the cylinder. The pipe from the receiver to the cylinder is of the full size called for by the engine builder. The object of this arrangement is, first, to have a full supply of steam close to the throttle; second, to provide a cushion near the engine on which the blow caused by the cut-off in the steam-chest may be spent, thereby preventing vibrations from being transmitted through the piping system, and, third, to produce a steady and rapid flow of steam in one direction only, by having a small pipe leading into the receiver. This steam flows rapidly enough to make good the loss caused during the first quarter of the stroke. Plants fitted up in this way are successfully running where the drop in steam pressure is not greater than four pounds, although the engines are 500 feet away from the boilers. This is probably the most radical departure in high-pressure work up to the present time.

In estimating the size of pipe desired for a given size of cylinder of a reciprocating engine, a prominent designer uses the following formula:

$$\frac{\text{Area of cylinder}}{\text{Velocity of steam in pipe} \div \text{piston speed}} = \text{area of steam-pipe.}$$

Example: simple engine 16″ cylinder, 30″ stroke, 150 r.p.m., velocity of steam 8000 feet per min. What size of pipe is required?

Area of 16″ cylinder = 201″ sq.
30″ × 2 × 150 ÷ 12 = 750 feet piston speed.
8000 ÷ 750 = 10.6 ratio of flow.
201 ÷ 10.6 = 18.9 sq. ins. area of steam-pipe.
18.9 sq. in. = 4.35″ dia. of steam-pipe.
Nearest dia. = 4½″ pipe.

In figuring sizes of pipe for steam-engines the following holds good in practice.

Diameter of steam-pipe for a simple engine = .35 of cyl. dia.

Diameter of exhaust pipe for a simple engine = .40 of cyl. dia.

Diameter of steam-pipe for a compound engine = .40 of L P cyl. dia.

Diameter of exhaust pipe for a compound engine = .40 of L P cyl. dia.

These proportions are ample and are those used in engine practice.

EXPANSION AND CONTRACTION IN STEAM PIPES*

In laying out a system of steam-piping for a power plant perfect freedom for expansion and contraction should be allowed, to prevent undue strains on any member of the system or at the joints, causing them to leak. The old types of slip-expansion joints having proved a constant source of trouble and expense requiring frequent repacking and adjusting, are seldom, if ever, used on a good job of piping. If absolutely necessary, however, to use this type of expansion joint, the piping should be so anchored as to prevent the joint from pulling apart.

With the advent of higher steam pressures and correspondingly higher temperatures and velocities, more attention has been given to the proper designing of piping systems and constructive details than in the past. Steel pipe bends of long radius are used wherever practical in place of the cast elbows of short radius. They take up the expansion stresses, making the system more flexible throughout; reduce vibrations and friction, and deliver the steam to the engine with a lower drop in pressure.

Pipe bends curved to a radius of less than five diameters of the pipe are undesirable as expansion

---

*Contributed to Power by William F. Fischer.

bends, because, being so stiff, they fail to take up the expansion in the line, and a good deal of strain is thrown on the fittings and joints. The radius should be at least five or six pipe diameters and if possible even greater than six diameters, say ten or twelve, in order to give sufficient elasticity.

ANCHORING

The method of anchoring the steam line and the position of the anchor are important details. The line may be so anchored as to throw severe strains on the joints, working the gaskets and bolts loose and causing leakage; or a broken fitting or cracked flange may be the result, making it necessary to cut out one or more units while making repairs. Many leaky joints can be traced to this cause.

No special rules can be given for designing and anchoring for expansion. The designer must depend on his own good judgment in placing the bends, anchors, etc., where they will do the most good. However, a knowledge of the expansion of pipes when heated is essential.

EXPANSION

In Fig. 1 there is shown a 10-inch extra heavy steam-pipe, and two clamps *A A* anchored rigidly to the walls. Say, for example, the pipe was placed in the position shown, at a temperature of 60 degrees Fahrenheit, anchored rigidly between one clamp and allowed to move freely through the other when expanding; supposing that while in this position, steam at 250 pounds pressure (above vacuum) was turned into it

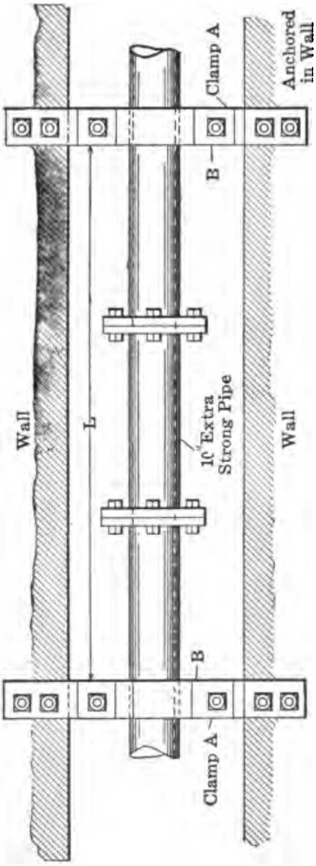
Wall
L
10" Extra Strong Pipe
Wall
Clamp A
B
Anchored in Wall
B
Clamp A

FIG. I

superheated 100 degrees, the pipe would heat and cause it to expand and slide through the clamp at the free end.

The elongation of the pipe, due to expansion due to the difference of the above temperatures, can be calculated by the following formula:

$$e = L\,C\,T \tag{1}$$

where

e = Amount of expansion or contraction, in inches, due to heating or cooling of pipe;
L = Length of pipe, in inches, at its original temperature before heating or cooling;
T = Difference in degrees Fahrenheit of temperature between the original temperature of the pipe and its temperature after being heated or cooled;
C = Coefficient of linear expansion.

We have assumed the original temperature of the pipe to be 60 degrees Fahrenheit. In the steam tables we find the temperature of steam at 250 pounds above vacuum to be 401 degrees Fahrenheit. Adding 100 degrees of superheat we obtain

$$401 + 100 = 501$$

degrees Fahrenheit, which equals the temperature of the steam flowing through the pipe. Assuming the pipe to be heated to the same temperature as the steam, then

$$T = 501 - 60 = 441$$

degrees Fahrenheit.

Assume the length L, or distance between the clamps to be 60 feet, then

$$L = 60 \times 12 = 720$$

inches.

The coefficient of expansion C can be found in almost any engineers' handbook for different materials.

For wrought iron it is usually taken as 0.00000686; for untempered steel and cast iron as 0.000006; for brass as 0.00001 and for copper as 0.000009.

By substituting the above values for L and T, and taking C for steel pipe as 0.000006 we obtain in formula (1)

$$e = L\,C\,T,$$

or

$$e = 720 \times 0.000006 \times 441 = 1.9,$$

or $1\frac{7}{8}$ inches.

That is, the original length of the pipe has been increased from 60 feet to 60 feet $1\frac{7}{8}$ inches, due to the added temperature of 441 degrees, and the movement of the pipe through the loose clamp is $1\frac{7}{8}$ inches.

FORCE OF EXPANSION

If we assume the pipe to be clamped between both clamps while at its original temperature, 60 degrees Fahrenheit, in expanding when heat is added it would exert a thrust against the clamps as shown by the leaders *B B*, and either the clamps would spring, or the pipe would buckle or bend sidewise, owing to its great length as compared with the diameter.

We can calculate fairly correctly the magnitude of this thrust by the following three formulas: Formula

(1), as used for expansion and contraction, and formulas (2) and (3), which are used in finding the elongation of a bar of metal due to a given external force. In formula (1)

$$e = LCT,$$

the rotation being the same as previously used.

In the formula

$$e_1 = \frac{PL}{AE} \qquad (2)$$

and in the formula

$$P = \frac{e_1 AE}{L} \qquad (3)$$

e = Total elongation of body in inches;
A = Area of metal of a cross-section of body in square inches;
P = Total stress on body in pounds;
L = Total original length of body in inches;
E = Coefficient of elasticity of metal composing body.
E for wrought iron = 25,000,000;
E for steel = 30,000,000;
E for cast iron = 15,000,000.

In formulas (2) and (3) e is equivalent to e in formula (1) with the exception that the elongation e in formula (1) is due to an internal force due to heating the pipe, and the elongation e, formulas (2) and (3), is caused by an external force, such as a weight, or pull.

If we substitute e in formula (1) for e in formula (3) we get

$$P = \frac{eAE}{L},$$

and by substituting for e its equivalent $L\,C\,T$ we get

$$P = \frac{LCTAE}{L},$$

and by cancelling L we have

$$P = C\,T\,A\,E, \tag{4}$$

where

P = Magnitude of thrust in pounds exerted by the pipe when expanding, or the pull when contracting;

C = Coefficient of linear expansion;

E = Coefficient of elasticity;

A = Area of metal in cross-section of pipe in square inches;

T = Difference in degrees Fahrenheit of temperature between the original temperature of pipe and its temperature after being heated or cooled.

Thus, formula (4) should give us the magnitude of the thrust exerted by the pipe as it expands. This formula should be used only where approximate close results are required, and within given temperatures only, as a body when heated beyond a certain temperature loses a large percentage of its strength.

This formula may be used for wrought-iron and steel steam-pipes heated up to 600 degrees, and as we seldom need go higher than this, we will not consider it above this temperature.

As an example, let us find the thrust P exerted on the clamps, in Fig. 1, due to the expansion of the pipe, using the same dimensions and temperatures as before. Then

C = 0.000006;
E = 30,000,000;
T = 441 degrees;
A = Area of metal of a cross-section of pipe.

This is found in the National Tube Company's handbook to be 16 square inches for a 10-inch extra-heavy pipe.

By substituting the above in formula (4) we have

$$P = C\,T\,A\,E,$$

or

$P = 0.000006 \times 441 \times 16 \times 30{,}000{,}000 = 1{,}270{,}080$ pounds.

This gives some idea of the strains thrown on the fittings and joints where no provision is made to take up the expansion and contraction in steam lines. If anchored improperly either the anchors would give, or the pipe would spring sidewise, straining the joints sufficiently in many cases to cause excessive leakage, or to crack the flanges.

CONTRACTION

If, in Fig. 1, the pipe were heated and allowed to expand freely through the clamps, and then clamped tightly, and allowed to cool off again, it would shrink or contract, subjecting the joints to a tensile strain of 1,270,080 pounds. Assuming the anchors to be of sufficient strength, and rigid enough to resist bending, the tensile strain on the material in the pipe would be

$$\frac{P}{A} = \frac{1,270,080}{16} = 80,000$$

pounds per square inch; sufficient to cause rupture.

ALLOWING FOR EXPANSION AND CONTRACTION

It is considered good practice in figuring for expansion to allow only one-half the calculated amount when cutting the pipe to length. For example, if in a run of pipe 100 feet between connections, or points where steam lines are taken off from the header, the expansion is calculated to be 3 inches; allow 1½ inches when cutting the pipe to length, or in other words, the total length of pipe should be 100 – 1½ = 99 feet 10½ inches.

Then the steam fitter takes up the other 1½ inches when erecting the line, with the result that when steam is turned on the expansion removes the tension or strain put on the pipe when cold, and the fittings and joints are strained only one-half as much as if none, or all of the expansion were allowed for. This rule is used by most large concerns, and has proven to be satisfactory to operating conditions in general.

TAKING CARE OF THE EXPANSION

In Fig. 2 a good example of a connection between the boilers and main steam header is shown. The bend is designed to take up the expansion and contraction in both the main steam header and the connection from the boilers to the header. With this arrangement the expansion strains on the fittings and joints are greatly reduced. The arrows show the movement of the pipe due to expansion and contraction.

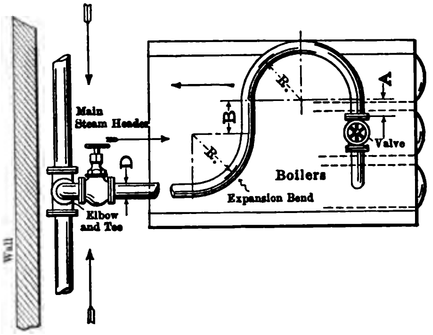

FIG. 2

This arrangement is particularly desirable where the boilers are placed in rows along the division wall, and the main steam header runs parallel with the wall, as shown.

As mentioned before, to have sufficient elasticity, the radius *R* should not be less than five diameters of *D*. The length of the straight portion of pipe at *A* on the end should be at least one diameter of *D;* with sizes from 5 inches and upward one and one-half diameters are preferred, and not less than 4 inches for smaller sizes.

The length of the straight pipe at *B* between the arcs should be from 6 to 12 inches, or greater if preferred. This insures better bends and prevents kinks when bending, which usually occur when no straight pipe is allowed, particularly on large pipe, also making the bend more flexible.

The expansion bend shown in Fig. 3 is intended for use in a long run of piping where it is desirable to anchor the line at two points to take the strain off the fittings and joints outside the anchors, not shown. When heated, the pipe expands in the direction of the arrows, tending to close the bend. To insure sufficient elasticity the dimension *B* should be made as large as possible. The dimensions *A* and *R* can be the same as in Fig. 2.

For sizes above 6 inches it may be impossible to make this bend in one piece, owing to the long length of pipe required. Commercial pipe averages from 16 to 20 feet in length, although lengths up to 24 feet are kept in stock by some dealers for use in making up special bends.

For bends 8 inches in diameter and larger, the arrangement shown in Fig. 4 may be used for the same purpose. With such an arrangement, however, a bending strain is put on the joints, as shown in Fig. 5, which is greatly enlarged to show the straining action on the joint at *E*, as the pipe expands.

The cast elbows should be extra heavy, with thick flanges. The flanges on the bend should be thick also, as a thin flange is easily ruptured or strained sufficient to cause leakage at the joints.

Where there is sufficient room, a better arrangement would be to substitute two 90 degree or square bends of steel pipe in place of the cast elbows, making the system more flexible.

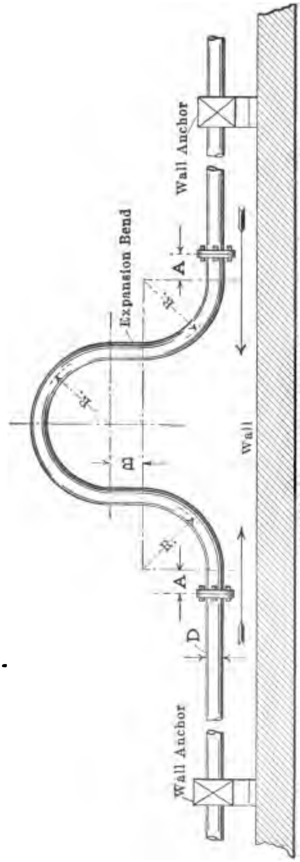

For Long Runs
FIG. 3

The method of anchoring a steam header of moderate length, say 50 to 125 feet, is shown in Fig. 6. The line is anchored rigidly at the center and allowed to expand both ways, as indicated by the arrows *A*. The joints nearest the anchor are subjected to the least strain, the greatest strain falling on the joints near the ends of the header.

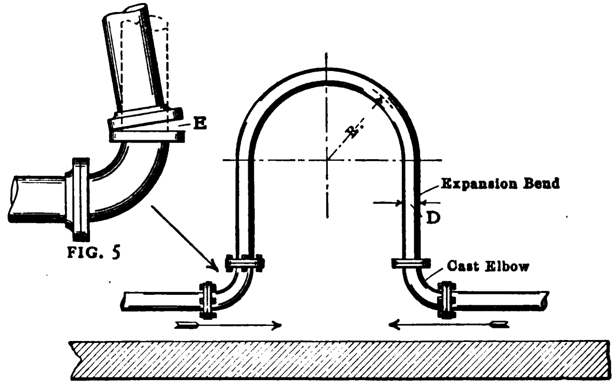

FIG. 5

FIG. 4

Proper provision should be made in connecting up to the boilers and engines to take care of this expansion, and before doing so it is a good plan to figure up the different runs of piping and work out the amount of expansion in each case.

This will give a better idea of the conditions, and proper provision can be made to handle each case accordingly.

The expansion of cast iron in fittings is about the same as untempered steel, but under the strain and

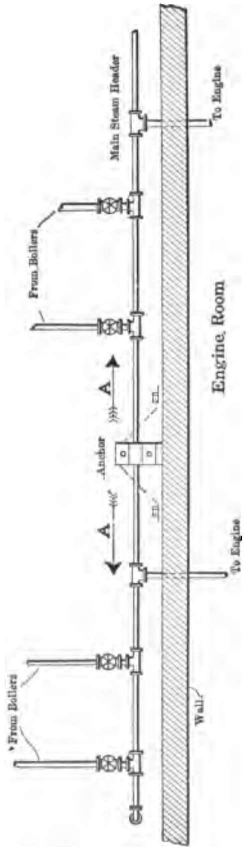
Main Steam Header
To Engine
From Boilers
A
A
Anchor
Engine Room
To Engine
From Boilers
Wall

FIG. 6

stress of superheated steam (heat and pressure combined) a fitting 22 inches in length from face to face of flanges has been known to get a permanent elongation of $\frac{5}{16}''$ in four years' use. Therefore in the design of steam-pipe lines, the question of superheat must be considered, not only for expansion alone, but for the permanent elongation and the loss of tensile strength of the material.

II

ESTIMATING STOCK FOR CURVED PIPES*

THE length of pipe necessary for curved work can be estimated in two ways, and the method to use, or whether a combination of both methods is necessary, will depend upon the form of the curves. Thus, take the simple U-bend shown in Fig. 7, where all the

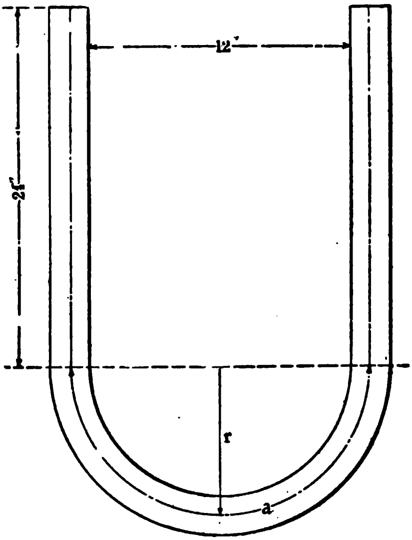

FIG. 7

---

* Contributed to Power by F. Webster.

dimensions of the finished work are known. The length of stock necessary will be approximately that of the length of the dotted line along the center of the pipe. This line is made up of two straight portions and a curve which is one-half the circumference of a circle. To get the circumference of any circle, multiply the diameter by the constant 3.1416, and for the length of a semicircle, as *a*, Fig. 7, multiply the radius *r*, which is one-half the diameter, by 3.1416. Wrought-iron pipes are designated by the length of the diameter of the hole. When making bent-pipe work, it is often necessary to know the outside diameter of the pipe. The dimensions of pipe are given in tables, such as the accompanying, and it is most convenient to use the tables when making estimates. There are, however, slight variations in the dimensions of pipes, so that those given in the table do not always strictly apply, but at the same time the dimensions given in the table are close enough for any work that the blacksmith may be called upon to make.

The solution of the example shown in Fig. 8, where 1-inch pipe is used, will illustrate the method. From the table the outside diameter of the pipe is 1.31 inches. The radius *r* of the curve equals

$$\frac{15}{2}+\frac{1.31}{2},$$

$$\frac{16.31}{2}$$

The length of the central or neutral lines of the curve equals

$$\frac{16.31}{2} \times 3.1416 = 25\tfrac{1}{2} \text{ inches.}$$

The total length of the stock equals 50½ inches.

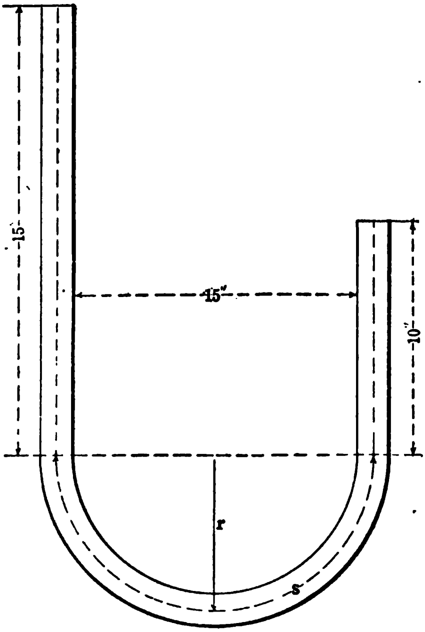

FIG. 8

For making a right-angle bend, as shown in Fig. 9, the length of the arc depends upon the length of the radius r used. Suppose $r = 6$ inches, and 1-inch pipe is used, the solution is then as follows:

The radius R of the center line of the pipe equals

$$6 + \frac{1.31}{2} = \frac{13.31}{2},$$

and the length of the arc equals

$$\frac{13.31}{2} \times \frac{3.1416}{2} = 10\tfrac{1}{2} \text{ inches.}$$

The length of the straight piece *a* equals

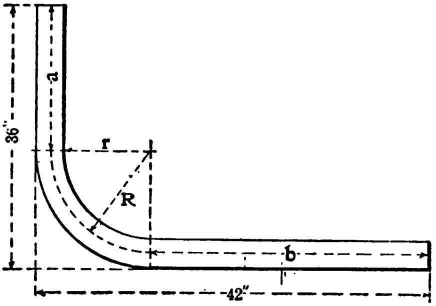

FIG. 9

$$36 - (6 + 1.31) = 28.7 \text{ inches,}$$

and the length of *b* equals

$$42 - (6 + 1.31) = 34.7 \text{ inches.}$$

The total length equals

$$10.5 + 28.7 + 34.7 = 74 \text{ inches,}$$

approximately.

To estimate the length of pipe required for the work shown in Fig. 10, make an accurate drawing of the work to some definite scale, and measure the length of the dotted center line, using a tape-line or cord, or a measuring wheel, and multiply the length by the scale.

All bends should be made up with the seam on the inside radius.

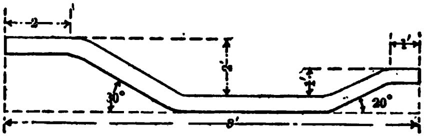

FIG. 10

The length of pipe necessary to make up a bend as shown in Fig. 3, Chapter I will be

$$L = 2 \times R \times 3.1416 + 2 \times A + 2 \times B = \text{length in feet.}$$

Then for a 6″ bend taking *A* and *B* equal to one diameter of *D*, and *R* equal to 6 diameters, an advisable radius.

$$L = 2 \times 3 \times 3.1416 + 2 \times 0.5 = 20.85 \text{ feet or } 20' \, 10\tfrac{3}{16}''.$$

III

VIBRATION IN STEAM-PIPES*

VIBRATION in steam-pipes is usually due to faulty design. Steam-pipes are generally so designed that the flow is about a mile a minute, and in steam-turbine work about a mile and a half a minute. Where in the piping there are a number of sharp turns through short-radius elbows, steam traveling at this high velocity is very likely to set up vibration in the line due to the sudden change in the direction of the flow. Even if the line is anchored it does not always cure the vibration, as the cause remains and in time the anchors may become loosened sufficiently to allow the pipe to vibrate as badly as before. Excessive vibration causes the joints to leak by working the bolts loose and taking the tightening pressure off of the gasket. In screwed work, where the pipe is screwed through the flange, or inso a screwed fitting, it sometimes causes leakage through the threads.

Figure 11 shows a method very often employed in connecting up an engine at the end of a steam line. Here *A* and *B* are short-turn elbows. From the elbow *B* the line drops to the high-pressure cylinder through the engine throttle-valve. Excessive vibrations oc-

---

* Contributed to Power by William F. Fischer.

curred in a line exactly similar to this, and were finally obviated by arranging the piping as shown in Fig. 12. The engine was of the slide-valve type; a separator in the main line took care of several engines.

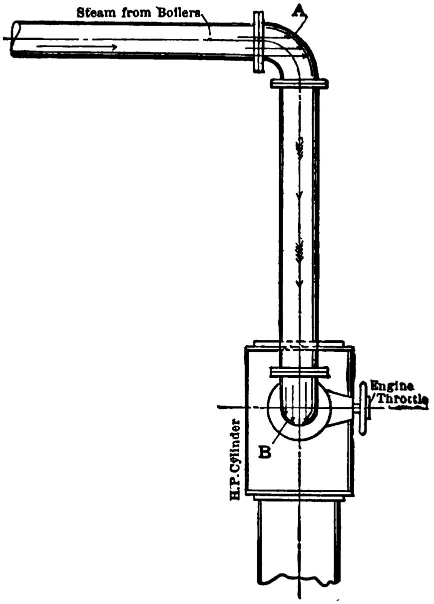

FIG. 11

WHAT CAUSED THE VIBRATION?

The following simple explanation will probably make this clear. Suppose, for example, that steam is forced out of the end of a straight, unobstructed pipe, as shown in Fig. 13. As long as the pressure in the line remains constant the steam flows from the nozzle at a constant velocity, causing very little, if any, vibration in the line. Suppose the pipe to be equipped at the end with a quick-opening and closing valve, capable of being opened and closed without jar or shock to the piping. While the steam is flowing the valve is suddenly closed. What happens? The rapidly moving steam, driven by the pressure behind it, strikes the valve-seat a quick blow (due to its momentum) tending to pull the line with it in the direction of the flow. The pipe then tends to spring back again to its original position. When the steam in front strikes the valve-

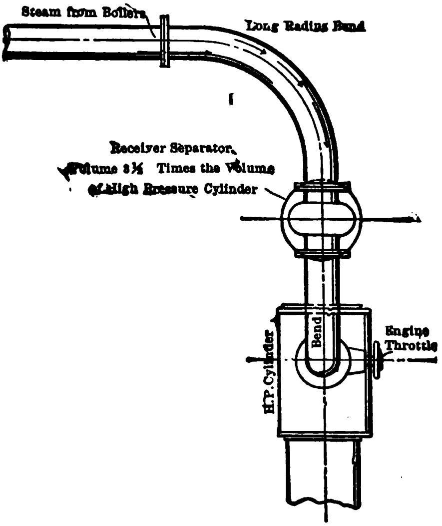

FIG. 12

seat, the steam coming on behind tends to pile up on the steam in front until all the steam in the line, back to the source of supply, is brought to rest. This occurs very quickly.

Suppose the valve to be opened and closed, say 180 times a minute, as in the engine in the illustration. Steam would strike the valve-seat each time the valve closed, tending to pull the line with it, and each time there would be a reaction. This would naturally tend to impart motion to the pipe if it were free to move even slightly. This rapid motion is what constitutes the vibration. The opening and closing of the slide valve in the steam-chest gives practically this same result, with the exception that the steam is not traveling as fast as before, due to the pressure required to force the piston outward, therefore, the force of the blow would not be as great. Still, it is sufficient to cause vibration in many cases.

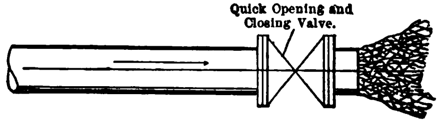

FIG. 13

Setting the engine valves improperly has a tendency to cause vibration also which is transmitted through the piping.

The short turn elbows *A* and *B*, Fig. 11, help along the vibration. The steam, in stopping and starting up to full speed again, when the engine valve is opened and closed, strikes the elbow *A* a glancing blow on the side, as indicated by the arrows, before being deflected at right angles, and strikes the elbow *B* again before being deflected downward. This has a tendency to set up a slight but rapid vibration.

By substituting long-radius bends of steel pipe in place of the two elbows *A* and *B*, and placing a separator of large volume in the line, as near the engine cylinder as possible, the vibrations are eliminated, at least to such an extent as not to be noticeable in the line, or cause annoyance.

RECEIVER-SEPARATORS PREVENT VIBRATION

In well-designed piping systems, receiver-separators of large volume are nearly always used, placed close to the engine cylinder. Where such separators have a capacity of three times the volume of the high-pressure cylinder, or greater, the piping may be reduced 10 to 15 per cent. from the sizes called for by the engine manufacturers, this reduction being made in the piping at the inlet side of the separator. The action of the steam going through the separator is somewhat as follows:

When the valve opens at each stroke of the engine piston, the engine obtains the necessary volume of steam from the separator to force the piston to the end of the stroke. This requires but a fraction of a second in ordinary cases. In case of the engine in Figs. 11 and 12, making 90 revolutions, or 180 strokes per minute, it requires $60 \div 180 = \frac{1}{3}$ of a second, neglecting the point of cut-off. In this short space of time enough steam is drawn from the separator to reduce pressure.

The boiler pressure is forcing new steam to the separator, through the inlet pipe, at a high velocity, and when the valve closes again, the steam rushes into the separator, crowding the other steam together, and restoring the volume and pressure required at the next stroke of the piston. This goes on continuously while the engine is running. The steam from the inlet pipe to the separator flows at an almost constant velocity, cushioning itself against the steam already in the separator, thus causing a steady and rapid flow of steam to the engine and preventing vibration.

Referring to Fig. 12 again, it is easy to understand why this arrangement prevents vibration. It removes the cause. The separator acts as a reservoir in which the steam is cushioned after each stroke of the engine; or in other words, when the valve closes, the oncoming steam tends to pile up in the separator, surging in and out as the valve opens and closes. This reduces the shock by taking the reaction caused by the quick cut-off in the steam chest. It removes most of the moisture, and if a slug of water is driven down, it is caught up by the separator and thrown to the bottom of the well, thus preventing it from getting into the engine cylinder. The two long-radius bends turn the steam gradually from its straight course bringing it down to the engine cylinder without jar or shock.

The bends should be large radius, not under five times the pipe diameter; 8 to 10 diameters and even greater are preferable. Long-radius bends also reduce the friction in the line, giving a higher velocity and pressure at the engine cylinder.

IV

HIGH-PRESSURE STEAM-PIPE FLANGES *

THE need of a good high-pressure flange joint becomes every day more urgent, as there is the greatest difference between the character of steam to-day and that used several years ago, making it practically impossible to use "standard" flanges, suitable at one time, for a pressure of 120 and 150 pounds per square inch. In an up-to-date plant it is not remarkable to find pressures up to 225 pounds, and sometimes even higher. It is sufficient to point to the French six-cylinder quadruple-expansion engine at the World's Fair at St. Louis, running at a pressure of some 300 pounds per square inch, while the steam was superheated to a temperature of 750 degrees Fahrenheit. Of course, this extremely high pressure and degree of superheat affects the entire pipe system, and not alone the joint; but it is my purpose here to discuss the latter only.

Figure 14 shows the Allen patent loose flange which can be used on pipe from 1 inch diameter up. The accompanying table of the "Verein Deutscher Ingenieure" is shown in Fig. 15. Here one will find pipe flanges of from 1 to 16 inches in diameter, and the

---

* Contributed to Power by Franz Koester and Luther D. Lovekin.

larger sizes are merely additions in the amount of material. This table gives the flange standards of the German Society of Engineers, and as they were therefore dimensioned on the metric system, the author has not only converted their figures, but laid out each individual flange so as to get even fractions of an inch. The number and sizes of bolts have not been changed, and it will be noticed that there are flanges provided with 6, 10, 14 and 18 bolts, in each case a number not divisible by 4, the latter being much favored in power-plant design. This may be due to the fact that with loose flanges it is not so necessary to straddle the centers. Of course, this does not apply so much to joints on valves, cylinders or any other cast-iron sections.

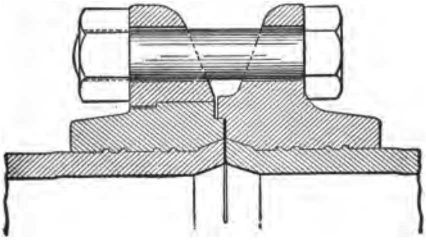

FIG. 14

The many advantages of loose-flange joints, such as a sure fit of bolt-holes and the possibility of shifting the pipes smaller distances than the arc between the consecutive holes; the easy assembling of the joints, and the easy inspection, as the flanges in many designs do not come so closely together, induced the engineers

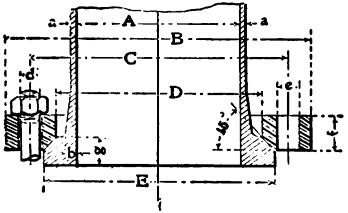

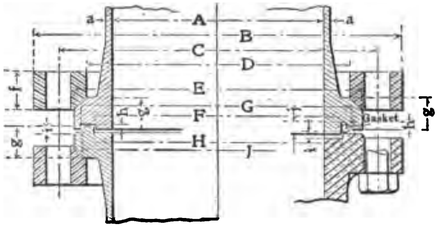

Size	A	1	$1\frac{1}{2}$	2	$2\frac{1}{2}$	3	$3\frac{1}{2}$	4	$4\frac{1}{2}$	5	6	7	8	9	10	11	12	13	14	15	16
Thickness of shell	a	$\frac{3}{32}$	$\frac{1}{8}$	$\frac{1}{8}$	$\frac{1}{8}$	$\frac{5}{32}$	$\frac{5}{32}$	$\frac{8}{16}$	$\frac{8}{16}$	$\frac{7}{32}$	$\frac{1}{4}$	$\frac{1}{4}$	$\frac{9}{32}$	$\frac{9}{32}$	$\frac{5}{16}$	$\frac{5}{16}$	$\frac{11}{32}$	$\frac{11}{32}$	$\frac{3}{8}$	$\frac{3}{8}$	$\frac{3}{8}$
Thickness of shoulder . .	b											$\frac{1}{2}$	$\frac{9}{16}$	$\frac{9}{16}$	$\frac{5}{8}$	$\frac{5}{8}$	$\frac{11}{16}$	$\frac{11}{16}$	$\frac{3}{4}$	$\frac{3}{4}$	$\frac{3}{4}$
Outside diameter of loose flange	B	$4\frac{7}{8}$	$5\frac{7}{8}$	$6\frac{1}{4}$	7	$7\frac{3}{4}$	$8\frac{3}{4}$	$9\frac{1}{2}$	10	$10\frac{5}{8}$	$11\frac{3}{4}$	13	$14\frac{1}{4}$	$15\frac{5}{8}$	$16\frac{3}{4}$	18	$19\frac{1}{8}$	$20\frac{1}{2}$	22	$23\frac{1}{8}$	$24\frac{1}{4}$
Diameter of bolt circle.	C	$3\frac{3}{4}$	$4\frac{3}{8}$	5	$5\frac{1}{2}$	$6\frac{1}{4}$	7	$7\frac{1}{2}$	8	$8\frac{5}{8}$	$9\frac{3}{4}$	11	$12\frac{1}{4}$	$13\frac{1}{2}$	$14\frac{5}{8}$	$15\frac{3}{4}$	11	$18\frac{3}{8}$	$19\frac{5}{8}$	$20\frac{3}{4}$	$21\frac{3}{4}$
No. of bolts		4	6	6	6	6	6	6	8	8	8	10	12	12	12	14	16	16	16	18	20
Size of bolts	d	$\frac{1}{2}$	$\frac{1}{2}$	$\frac{5}{8}$	$\frac{5}{8}$	$\frac{3}{4}$	$\frac{3}{4}$	$\frac{3}{4}$	$\frac{3}{4}$	$\frac{3}{4}$	$\frac{7}{8}$	$\frac{7}{8}$	$\frac{7}{8}$	1	1	1	1	$1\frac{1}{8}$	$1\frac{1}{8}$	$1\frac{1}{8}$	$1\frac{1}{8}$
Diameter of bolt-holes.	e	$\frac{5}{8}$	$\frac{5}{8}$	$\frac{3}{4}$	$\frac{3}{4}$	$\frac{7}{8}$	$\frac{7}{8}$	$\frac{7}{8}$	$\frac{7}{8}$	$\frac{7}{8}$	1	1	1	$1\frac{1}{8}$	$1\frac{1}{8}$	$1\frac{1}{8}$	$1\frac{1}{8}$	$1\frac{1}{4}$	$1\frac{1}{4}$	$1\frac{1}{4}$	$1\frac{1}{4}$
Inside diameter of loose flange	D	$2\frac{3}{8}$	3	$3\frac{3}{8}$	$3\frac{3}{4}$	$4\frac{1}{2}$	$4\frac{7}{5}$	$5\frac{1}{2}$	$6\frac{1}{2}$	$6\frac{1}{2}$	$7\frac{3}{4}$	$8\frac{7}{8}$	10	$11\frac{1}{4}$	$12\frac{3}{4}$	$13\frac{3}{8}$	$14\frac{1}{2}$	16	$17\frac{1}{8}$	$18\frac{1}{4}$	$19\frac{1}{4}$
Thickness of loose flange	f	$\frac{5}{8}$	$\frac{3}{4}$	$\frac{3}{4}$	$\frac{7}{8}$	$\frac{7}{8}$	1	1	$1\frac{1}{8}$	$1\frac{1}{4}$	$1\frac{3}{8}$	$1\frac{1}{2}$	$1\frac{5}{8}$	$1\frac{5}{8}$	$1\frac{3}{4}$	$1\frac{7}{8}$	2	$2\frac{1}{8}$	$2\frac{1}{4}$	$2\frac{3}{8}$	$2\frac{1}{2}$

Diameter of pipe flange	E	3	3⅝	4	4½	5¼	6	6½	7	7½	8⅝	9⅞	11⅛	12¼	13⅜	14½	15¾	17	18¼	19⅜	21¾
Thickness of pipe flange	g	⅝	¾	¾	⅞	⅞	1	1	1⅛	1¼	1¼	1¼	1¼	1⅜	1½	1½	1½	1⅝	1⅝	1⅝	1¾
Inside diameter of groove....	F	1⅞	2⅜	2⅞	3⅜	4	4½	5	5½	6	7¼	8¼	9½	10½	11¾	12¾	13¾	15	16¼	17¼	18¼
Outside diameter of groove....	G	2⅝	3⅛	3⅝	4⅛	4¾	5⅜	5⅞	6⅜	6⅞	8⅛	9¼	10½	11½	12¾	13¾	15	16¼	17½	18½	19½
Depth of groove....	h	⅛	⅛	⅛	⅛	⅛	⅛	⅛	⅛	⅛	⅛	3/16	3/16	3/16	3/16	3/16	3/16	3/16	3/16	3/16	3/16
Inside diameter of tongue ...	H	1 13/16	2 5/16	2 13/16	3 5/16	3 15/16	4 7/16	4 15/16	5 7/16	5 15/16	7 3/16	8 3/16	9 3/16	10 3/16	11 11/16	12 11/16	13 11/16	14 15/16	16 3/16	17 3/16	18 3/16
Outside diameter of tongue ...	J	2 9/16	3 1/16	3 9/16	4 1/16	4 11/16	5 5/16	5 13/16	6 15/16	6 13/16	8 1/16	9 3/16	10 7/16	11 7/16	12 11/16	13 11/16	14 15/16	16 3/16	17 7/16	18 7/16	19 7/16
Height of tongue ...	i	3/16	3/16	3/16	3/16	3/16	3/16	3/16	3/16	3/16	3/16	¼	¼	¼	¼	¼	¼	¼	¼	¼	¼
Height of tongue in lens joint.	j	9/32	9/32	9/62	9/32	9/32	9/32	9/32	9/32	9/32	9/32	⅜	⅜	⅜	⅜	⅜	⅜	⅜	⅜	⅜	⅜
Diameter of gasket in lens joint.		7/32	7/32	7/32	7/32	7/32	¼	¼	¼	¼	¼	5/16	5/16	5/16	5/16	5/16	5/16	5/16	5/16	5/16	5/16

This table is abridged from tables of standard pipe fittings for pressure up to 20 atmospheres (294 lbs.), adopted by the "Verein Deutscher Ingenieure," in the year 1900. All the dimensions, originally given in meters, have been changed to read in inches and fractional parts of an inch, and have been slightly increased over what the converted figures would be. Number and size of bolts have not been changed.

FIG. 15. HIGH-PRESSURE STEAM-PIPE FLANGES

on the continent of Europe to construct elbows, T's, water-catchers, steam collectors, etc., also with loose flanges. Indeed, loose flanges are more universally used in Germany than in any other country, and it is therefore to be expected that one will find there a larger variation in their design than in America. As previously stated, loose flanges are designed for both wrought-iron and steel pipes; the welding process, being no longer secret, is performed in many different shops with a consequent large variety of loose flange joints.

In America the ground joint is much more prevalent than in Europe, where the tongue-and-groove joint is much favored, the gasket usually consisting, for high-pressure superheated steam, of corrugated copper rings sometimes imbedded in asbestos; also, corrugated steel may be used, the latter being the practice to a certain extent in the new subway plant in New York. In the flange already referred to, Fig. 15, at the right-hand side a so-called lens joint is illustrated, which is somewhat similar to the above-mentioned Riley joint, but the ends of these pipe sections are made considerably broader, and it will be noticed that a round gasket is used, usually consisting of a woven-copper ring. By using reinforced pipe ends, as is the custom with Continental engineers, any type of tongue-and-groove joint may be adopted, and it will depend altogether upon the pipe for its contact surface, and not upon the loose flanges. The reinforced end is of the same material as the pipe itself, previously forged as a short cylinder with a heavy flange, and then welded to the pipe, after which the joints are turned and finished.

The loose-ring flange is made of wrought iron, cast or forged steel. It will be noticed that between the nut and pipe body sufficient space is left, although the outside diameter of the flange is less than that common in America for high-pressure steam flanges. Of course, the arrangement of the flange with relation to the pipe itself varies.

Figure 16 represents a flange movable on a reinforced pipe, the abutting faces of which are flat, while that in the table are at 45 degrees. When simply flaring the pipe ends, as shown in Fig. 16, the pipe becomes thinner at *B* than at *A*. Of course, it, therefore, becomes necessary to give the abutting face of the loose flange a slight slope, in order to obtain a complete contact. If this is not done the joint will sooner or later leak, and in any case the pipe flanges are thinner than the straight-pipe shell. To overcome this, a flange similar to that illustrated in Fig. 17 may be adopted, which has been successfully used on the continent of Europe. This type is not simply flared over, but during the process of flaring it is upset and the flange made somewhat thicker than the pipe shell, thus making it

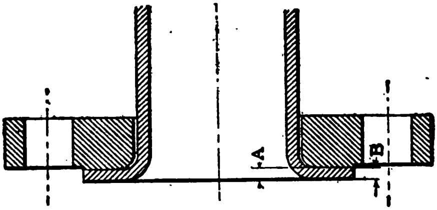

FIG. 16

possible to mill the faces without reducing the thickness below that of the pipe proper. This type has been much used on the continent of Europe and is to-day regarded as an effective pipe joint. Fig. 18 represents a flange joint of male and female type, and it may as well be made with tongue and groove, or smooth face.

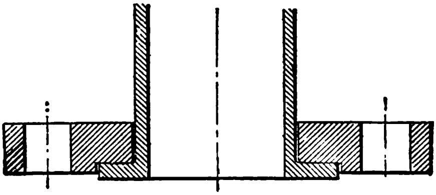

FIG. 17

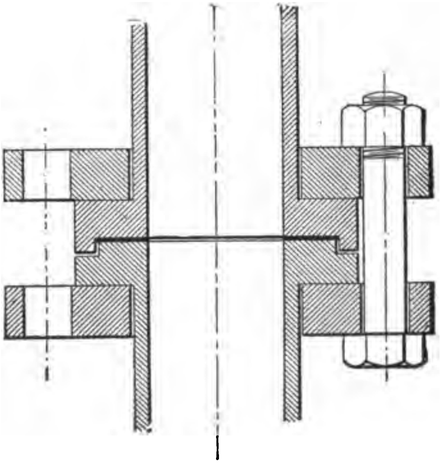

FIG. 18

This flange is welded to the pipe, and the ends then faced. Figs. 19 and 20 represent loose-flange joints with the pipe rolled in the flange. In both cases only one of the flanges is of the loose type, while the opposite one is fixed to the pipe. A screwed joint, also of the loose-flange type, is illustrated in Fig. 21. As the screw fittings are not so favorably considered in Europe as in America, this type is seldom found,

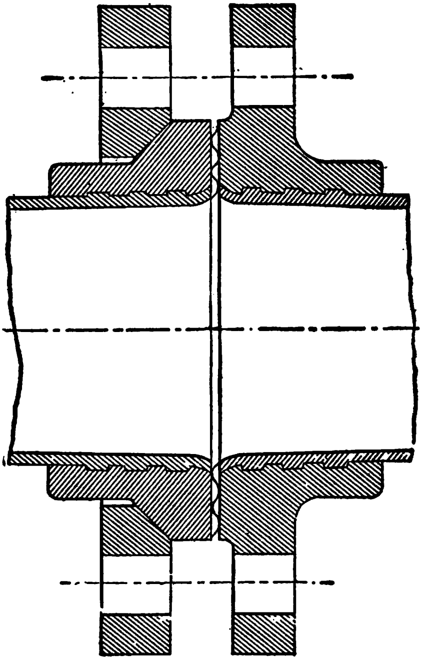

FIG. 19

especially with high-pressure steam. It is not so much the objection to the screw joint on account of its tightness, but to the liability of rupture at the end of the threaded section of pipe, especially in the case

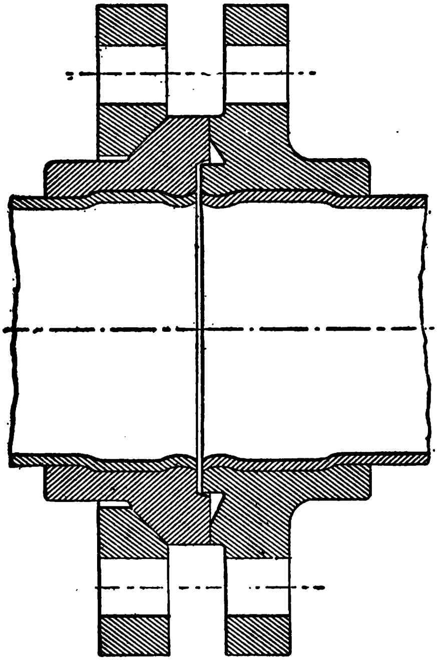

FIG. 20

where the pipe is not upset and the expansion and contraction work at this weak spot. Another type of flange is shown in Fig. 22, where the flanges are riveted to the pipe sections, and although the pipe joints, as well as the rivets, are well calked, it will easily be seen that each individual rivet increases the liability to leakage. Where a flange has to be made in the power-house itself, a flange similar to that illustrated in Fig. 23 may be advantageously employed. This type is patented by the Sulzer Company, and is used for filling in sections, generally between two cylinders, or pipes carrying low-temperature steam. It will be seen

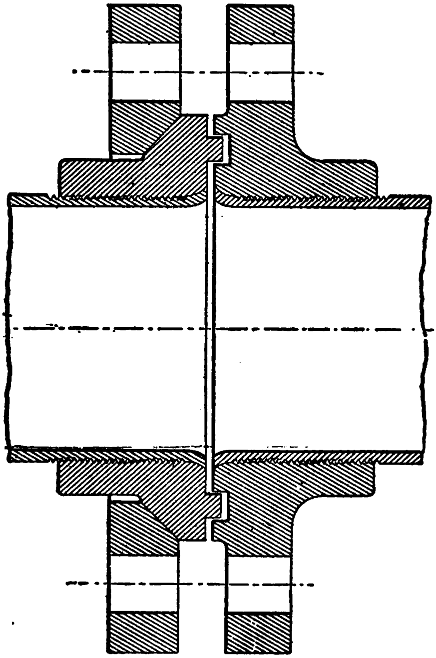

FIG. 21

that, as the steam on leaving the high-pressure cylinder is not longer superheated, the temperature does not interfere with the use of copper. The boiler feed-water pipes, in America, are often made of brass with screw flanges, while on the continent of Europe these pipes are usually of copper.

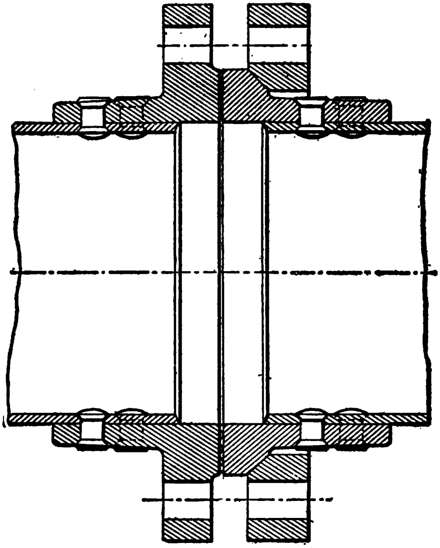

FIG. 22

Figures 24 and 25 show a joint which is preferable to all others for exceedingly high pressures, both for superheated steam and hydraulic work. This joint is made for superheated steam by inserting a plain gasket of annealed copper between the serrated faces, as shown at Fig. 24, and pulling together Fig. 25. The bolts in

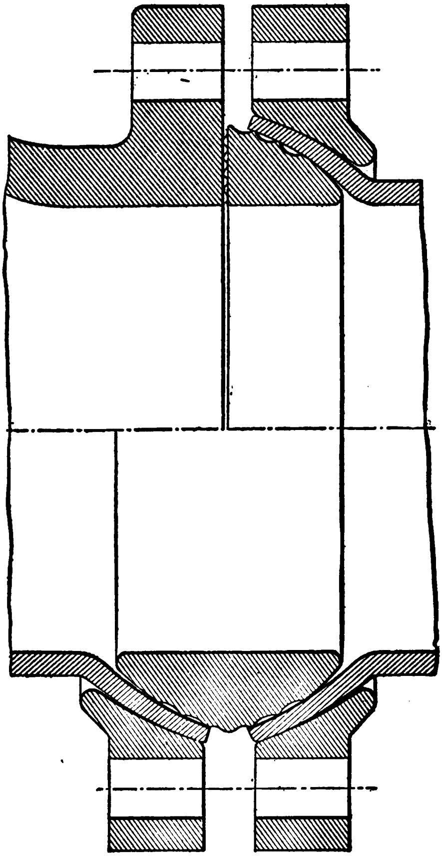

FIG. 23

all of these flanges are made of sufficient strength to compress the copper into the desired form. The amount of surface on this gasket is of such proportion

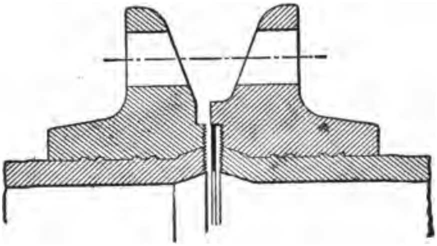

FIG. 24

that the pull on the bolts is sufficient to obtain the desired results. For high-pressure hydraulic work, with pressures up to 6000 pounds per square inch, a lead gasket has been used. The pressure this joint

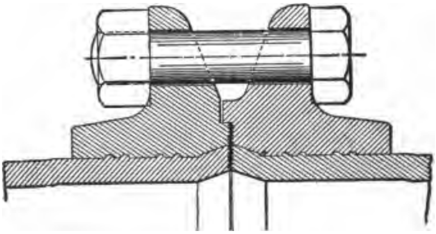

FIG. 25

will stand is limited only by the strength of the flange and the bolts. When made in proper proportion, a pressure of 20,000 pounds per square inch could be carried as easily as that of 6000 pounds, as it is absolutely impossible to have a leak when properly made.

Figure 26 shows a joint similar to Figs. 24 and 25, with the exception that the gasket and serrated faces are omitted and the face of the pipe and flange is so finished as to form a flange-to-flange joint. This need not necessarily be a ground joint, inasmuch as the bolts are so proportioned as to give a pressure of over 1000 pounds per square inch of surface contact. This joint is preferred by many engineers on account of there being no possibility of its being affected by expansion and contraction. It is also impossible for the joint to leak between the flange and the pipe when it is properly attached. This form has been tested up to 3500 pounds per square inch with the flange loose on the pipe; this, however, was in a special case, wherein the pipe was subjected to an enormous pressure sufficient to cause the flange to be strained beyond the elastic limit, and thus give the flange a permanent set, causing it to become loose on the pipe.

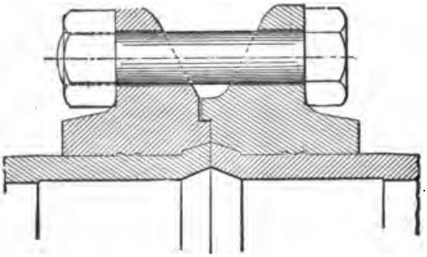

FIG. 26

After finding out this particular feature, it was thought advisable to see what the joint would stand without leaking between the flange and the pipe, and as before mentioned, it stood 3500 pounds per square inch, with no sign of leak. This joint possesses many advantages over other forms wherein the metal is turned over at the ends of the pipes and faced so as to form a metal joint.

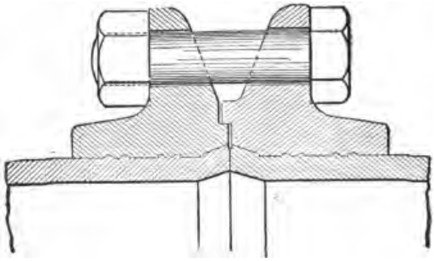

FIG. 27

Figure 27 shows a modification of Fig. 26, wherein the entire joint is made at the ends of the pipes, the flange itself being cut away clear, as shown.

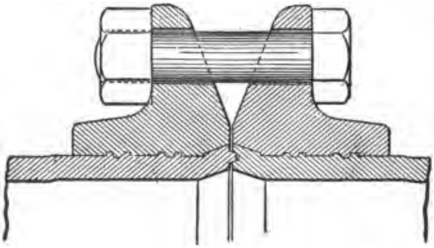

FIG. 28

Figures 28 and 29 show a new form of joint, as suggested by Robert S. Riley. This joint is considered by many to be of great value for superheated steam only, and is what we may term a metal-to-metal joint, having the ends of the pipes abutting and the flanges clear.

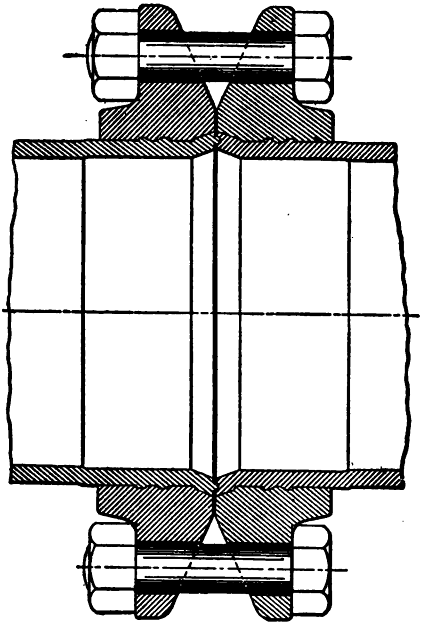

FIG. 29

Figure 30 shows another form of joint which is practically the same as Fig. 26, with the exception that it has an additional groove in the flange, and a gasket shown between the faces of the flange and pipe. This joint will stand any known pressure if properly proportioned.

Figure 31 shows a joint similar in character to Fig. 25, with the exception that the male and female at the ends of the pipe are dispensed with, and the pipes and flanges are formed as shown, with the gasket between them, or they may have a metal-to-metal joint as in the previous cases referred to. In fact, any of the before-mentioned types of joints may be utilized without the male and female feature if desired. This last-mentioned joint possesses all the good features possible in any metal-to-metal joint, with the exception of the flange being fixed instead of loose. This,

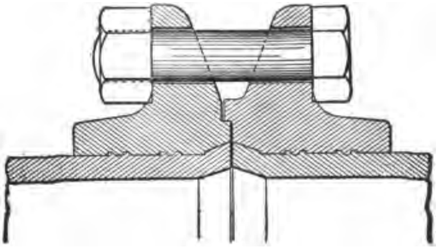

FIG. 30

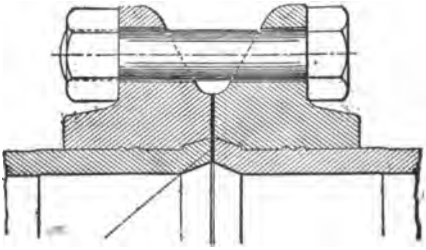

FIG. 31

however, can easily be remedied by using the Allen joint, previously referred to, and making the faces plain instead of male and female. The strength of a joint made on this principle is unlimited, and depends only on the designer. Five thousand pounds pressure has been placed on a joint designed for testing to this pressure, but intended for use on steam-pipe lines carrying 300 pounds pressure.

In all of the designs referred to, they can be applied to flanges ranging in sizes from 2 up to 20 inches in diameter, and every flange has been so calculated as to produce a definite pressure on the face or gasket, a suitable number of bolts of ample size having been provided to produce this effect. The thickness of the flange in every case has been calculated as a beam supported at one end and loaded at the center of the bolt, and the breadth of the beam considered as the distance between centers of bolts, thus giving a uniform design throughout the entire list of flanges, wherein the bolts and flanges are equal in strength.

This new list is suitable for working pressures between 100 and 300 pounds per square inch. The male and female may be omitted on pressures below 150 pounds.

Another object attained in designing flanges here shown is to keep all bolts outside of the joints as will be seen, so as to render them free from corrosion, and also avoid the troublesome effect so often encountered of flanges leaking around the bolt-holes.

V

PACKING FLANGE JOINTS WITH SOFT PACKING *

AFTER the packing in a flange joint has blown out (to use a common expression which usually means that a small part of it has failed), the next move is of course to remove the bolts holding the flanges together. When nuts have been on bolts in such a place for several years it is often easier to twist one or more of them off than to remove the nuts in good order. If other bolts are at hand to replace those spoiled it does not pay to spend much time trying to save them; but many times there are no more in stock, hence it is desirable to save all of the old ones. Kerosene oil is one of the best things known for loosening a rusty nut, but it requires time for it to work, and as it is not always practicable to wait, some other means must be adopted.

A very good plan is to hold a sledge or heavy hammer against one side of a nut and strike the opposite side several smart blows with a lighter hammer, as this will usually loosen the rust and enable the engineer to remove the nut without further trouble.

Having taken out all bolts, put them into a pan

---

* Contributed to Power by W. H. Wakeman.

containing kerosene oil and let them remain there until wanted for use, for by so doing the rust and dirt will be loosened.

Flanges do not always come apart readily after the bolts are removed, therefore chisels or wedges must be used to force them apart, for some kinds of packing adhere firmly to iron heated by steam. Do not attempt to separate them in such a case by one wedge only, as the heavy strain brought to bear at one point may break the flange. It is better to use two or three in a stubborn case than to run any risk in the matter.

If the stop valve near the boiler is tight, preventing escape of steam, it will be appreciated at this time. A small leak may not cause a postponement, but in some cases it is necessary to remove all steam from the boiler before the job can be finished, and this means several hours' delay, besides a loss of much heat. Have the stop valve made tight, or put in a new one as soon as possible.

Care should be taken to remove all of the old packing, and for this purpose a carpenter's chisel may be used, as its shape is well adapted to the work, for it can be used where the flanges are but a short distance apart. The carpenter may object, but in an emergency it is better to buy him a new one than to delay the work.

Where a scraper is wanted it may be made by turning the end of a file at right angles to the body and grinding it to a sharp edge of suitable form.

A few lines concerning selection of packing for flanges will not be out of place at this point. In some of our old plants cast-iron pipe is still in use.

This pipe has been used just as it came from the foundry, and of course the face of every flange was very rough. In such a case it is necessary to use a soft fibrous packing, not less than ⅛ inch thick, or it may be well to use one size thicker, in order to fill all depressions before the high spots come together.

The use of thick packing is to be avoided as much as possible, because it is more expensive in first cost and more liable to blow out, all other conditions being equal, thus increasing the cost of maintenance. Common rubber packing with cloth inserted is of no value whatever, when compared with improved brands made on purpose for such service, without cloth or canvas. There are several good kinds on the market at the present time. If steam passing through the pipe is saturated with cylinder oil, it will gradually dissolve soft packing, but asbestos millboard stands this test well. If used on rough flanges it should be at least ¼ inch thick, and even then it may be difficult to make a tight joint. On smooth surfaces $\frac{1}{16}$ inch is sufficient.

Where it is found difficult to keep a joint packed with either of these, some special kind may be used to better advantage, but if put in properly the above-mentioned brands will last for years, unless there is some defect in the piping, which should be corrected without delay, as it may be dangerous.

The next point to be considered is the form of gasket to be used. If it is decided to cover the whole face of flange with packing as shown in Fig. 32, and it is practicable to widely separate the flanges, the packing may be spread over one of them and by hammering it over the edges of the iron it will be cut through, making an acceptable fit. By striking directly over the holes with a ball peen-hammer, the bolt-holes can be nicely cut in a short time.

However, in many cases it is not possible to widely separate the surfaces to be packed, therefore it becomes necessary to ascertain the outside and inside diameter of the flange. Then, by using a pair of dividers, the gasket can be laid out, and by following these lines with a sharp knife, a neat job is the result.

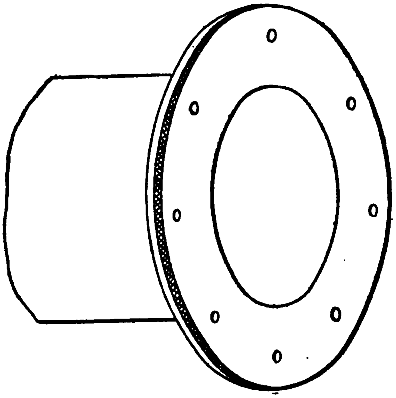

FIG. 32

There are two points in favor of using a wide gasket, one of which is that when placed in position between two flanges that are close together, it is an easy matter to bring it into line by observing the outer edges and locating them flush with the outside of flanges. The other point is that when the nuts are screwed on, it is practically impossible to make a mistake, in doing the work, as may happen when a narrow gasket is used.

The objection to this form is, however, that on account of its great width it is liable to bear at some undesirable point rather than where it will do the most good. This will be apparent by considering the narrow gasket illustrated in Fig. 33. Its internal diameter corresponds to nearly the inside size of flange, but it is only wide enough so that when placed in position it is wholly within the bolt-holes. The result of this is that all pressure caused by screwing up the nuts is concentrated on a comparatively small surface, therefore the pressure per square inch is much greater than where a wide gasket is used, because in the latter case the same total pressure is distributed over about three times as much surface.

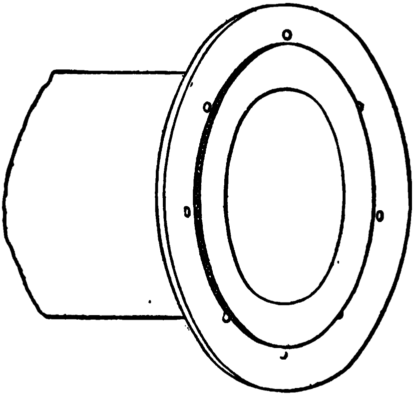

FIG. 33

With a wide gasket the nuts may be screwed up according to any convenient plan, but with a narrow gasket care must be taken to tighten them as nearly even as possible. If this caution is ignored and one nut tightened or screwed down as far as possible before others are touched, the result will be as in Fig. 34.

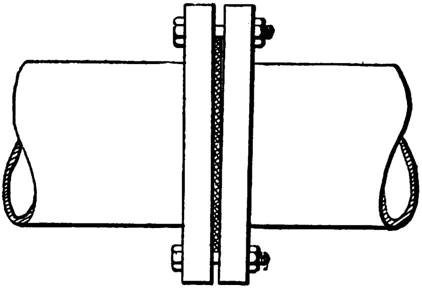

FIG. 34

This is exaggerated in order to make it plain, but in practice the flanges bind on the gasket at one point only, consequently even a light pressure of steam will blow out the opposite side of it, and make it necessary to put in a new one. In one case less than 5 pounds did this, requiring a new gasket to make good the damage.

One nut should be screwed down until a light pressure is brought to bear on the gasket, then the nut directly opposite should be treated in the same way. Another should be treated in like manner, followed by the nut directly opposite to it, and so on, until all of the bolts are under light tension. The same process should be carefully repeated, giving all bolts more tension. Going over them once more is sufficient to finish the job and hold the gasket at all points evenly.

Perhaps some reader will laugh at the idea that a flange joint could by any possibility be packed without a hole through the center of the packing, but cases are known where the circular piece was left whole and much surprise manifested when nothing could be forced through the pipe.

It appears as if pressure would rupture the packing and it undoubtedly could not hold on a large pipe, but for the smaller sizes (say, 8 inches or less) it will withstand more than anybody naturally expects. Always cut this center hole a trifle larger than the internal diameter of the flange.

When laying out a gasket, locate it as near to the edge of the sheet as possible, in order to save packing. The circular piece left after cutting out a large gasket may be used for a smaller size until what is finally left is only large enough for packing a union.

After a joint is nicely packed, steam should be admitted to the pipe slowly in order to warm it gradually, for sudden application of pressure, which may be air pressure in advance of the steam, may blow out the gasket. After a light pressure of steam has been on long enough to thoroughly warm the joint, it is a good plan to remove the pressure and tighten all nuts holding the flanges, as is it often possible to imbed the flanges more firmly into the gasket after both are well heated.

The practice of screwing up nuts when pressure is on the gasket cannot be too strongly condemned, as it is dangerous. If a joint is loose and one nut is turned without removing pressure from the pipe, an overload is at once brought to bear on this bolt, and there is a good chance for it to fail under the tension. The failure of one bolt immediately throws an extra load on the others, and if they do not fail under the abuse it is due to good luck more than to good management. Of course it may not be convenient to remove pressure from the pipe when a gasket begins to leak, but in that case it is better to let it leak or even blow out than to run the risk of sudden failure of the bolts under tension.

VI

CONNECTING BOILERS TO STEAM MAINS*

PROBABLY no detail connected with the erection and operation of boilers receives less attention than the manner of connecting the boiler to the main steam line unless it be the method of putting the boiler into commission after it has been laid off for cleaning and repairs.

A number of accidents caused by the improper design of the branch piping are illustrated in this chapter by sketches, which sketches are shown by Figs. 35 to 43 inclusive. These sketches certainly show a variety of arrangements and sometimes two or three types are found in the same boiler-house.

The first thing to be determined regarding the connection between the boiler and the main should be the number and kind of valves to be used. The most common practice is to use one globe valve, but the only argument in favor of this is the lower first cost. It is better practice to use two valves in this branch for considerations of safety and convenience. Surely no one should be placed in jeopardy of such a horrible death as scalding in a boiler, for the sake of the first cost of an extra stop-valve. Then boilers have been

---

* Contributed to Power by W. E. Snyder, M.E.

known to go for months in need of inspection and repair in the drums, yet the work could not be done, nor could any cleaning be done because the crown valve was leaking and no one could go into the drums. Then, again, it is not a pleasing sensation to feel, while in a boiler, that there is only one valve of a very uncertain design and construction, and of unknown age between you and a horrible death. Nor is the single valve with its usual leaks calculated to inspire the workman with the sense of complete security so vitally necessary if good work is to be done in a boiler. Therefore, two valves should be placed in each branch. If the boiler is to be off but a short time and no one is to go into it, only one need be shut; but when internal cleaning and repairs are to be done both valves can be closed and the greatest degree of safety secured.

As to the kind of valves to be used, a first-class gate-valve is the most desirable, though globe valves are probably more frequently used. One reason for preferring the gate to the globe valve is that the gate will open more gradually and this feature may at some time be the means of saving some poor fellow's life.

Another reason for preferring the gate-valve is that there is no possibility of a careless or ignorant workman putting it in so that, when shut, the pressure is against the stem tending to strip the threads, as has been done with globe valves.

The objection to the use of angle-valves, however, is much stronger than to globe valves, first because they have the same rapidity of opening as the globe valve, and, second, especially because the direction of flow must be changed in the valve and it is therefore a form of construction peculiarly liable to injury by water ram if there be any chance for water to collect in the pipe. Examples of this will be given below.

In Fig. 35 the water tender had been accustomed to close both valves shown while working in the boiler, and then, before getting up steam, the angle crown valve would be opened, and when the boiler was ready to turn into the line the globe valve in the branch would be opened. The branch inclined slightly toward the boiler.

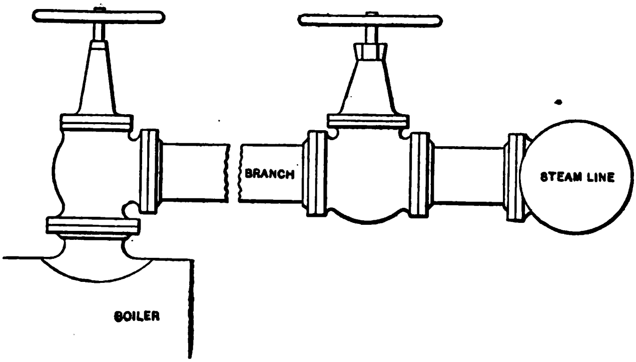

FIG. 35

One day, owing to some misunderstanding on the part of an attendant, the crown valve was left shut until after steam was up. The globe in the branch had been left open as no one had been in the boiler. The water tender was an intelligent man and studied over the matter for some time as to whether he would let steam go down again and go through the regular routine with the valves, or risk opening the crown valve when steam was up. He finally decided on the latter course, but at the first movement of the hand wheel on the angle-valve, the most violent pounding began inside the valve and seemed to resemble the blows of a heavy sledge. The water tender was terribly frightened, but seized the wheel and whirled the valve open as rapidly as possible. The pounding gradually subsided, leaving the man so badly frightened he could hardly get down off the boiler.

It is reasonably certain this was due entirely to water ram caused by collection of water in the branch, and the only reason the valve was not burst was either because there was not enough water pressure to do serious damage or the valve was an unusually strong one.

The next instance of similar trouble was with the connection shown in Fig. 36, where one angle-valve alone was used. The boiler had been off for some time while the rest of the plant had been running and of course considerable water collected in the branch pipes as the drip had been left closed.

When the boiler tender went to put the boiler on the line he found the valve quite cold, though there was 125 pounds steam pressure on the system. Thinking to drain out the collected water, be began to open the small drip-pipe valve. At the first turn a violent surge occurred in the branch pipe followed by the bursting of the angle-valve on the broken line shown. No further damage followed, as it was possible to cut the other boilers off this part of the steam main, and this was done at once.

The next accident of a similar nature was caused by the connection shown in Fig. 37. There were two valves in this branch: a globe valve in the vertical leg and an angle crown valve. The boiler had been off for some time, the remainder of the plant being still in operation. The globe valve in the vertical leg had been left open and only the angle-valve had been used to shut the boiler off the line.

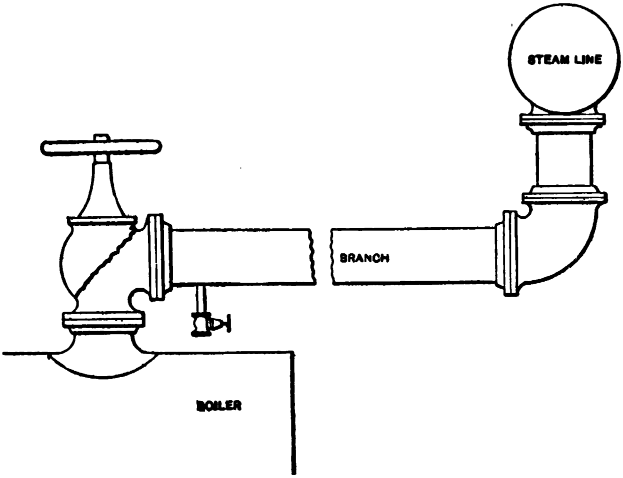

FIG. 36

When the boiler was ready to be put on the line again the water tender went up on the boiler and began to open the angle-valve. At the first movement of the wheel the valve burst, as shown in the figure.

The next accident of this kind to be cited was caused by a connection shown in Fig. 38. In the connection a gate-valve was placed next to the boiler and from this the branch pipe ran about 30 feet to an angle-valve which connected it to the steam main.

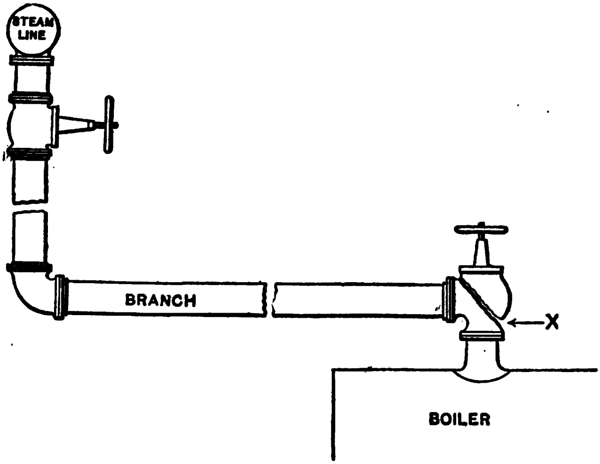

FIG. 37

It had been customary to raise the pressure to about half the working pressure and then open this gate-valve. The pressure would then be run up until the boiler was ready to put on the line, when the angle-valve would be opened. One day the gate-valve was opened very shortly before the boiler was to be put on the line. The water tender then went to open the angle-valve and while doing so stood with his left foot on the steam main and his right up on the branch pipe, thus placing him at the side of the angle-valve. At the first movement of the valve there was a sharp click and an instant later the valve burst as shown by the ragged line. The water tender was knocked from the pipe, fell to a platform about 5 or 6 feet below and was instantly killed. The steam was at 150 pounds pressure and the body of the valve very well constructed of phosphor bronze $\frac{7}{8}$ inch in thickness.

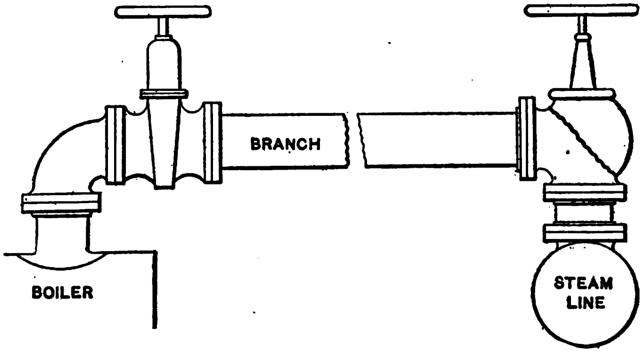

FIG. 38

All the circumstances connected with these accidents point to the collection or pocketing of water in the branch pipes. On one point, however, with reference to these accidents, satisfactory information is lacking and that is the relative steam pressures in the boiler and in the steam main when the valve began to be opened. The men who really had this knowledge, if any one had, were either in such a position or condition that they would not or could not say.

In questioning different boiler tenders on this subject, the greatest variation was found in their practice. One man will positively assert that there should be several pounds excess pressure in the steam line while another will say the excess pressure should be in the boiler, and still another will say the pressures should be about equal.

Some of the particular points to be observed in the arrangement of the branches so as to provide as far as possible for safety are to avoid the use of angle-valves; to arrange the piping in such a way that condensed steam will not pocket in it, and to make provision for expansion. The danger of angle-valves has been shown above and other similar instances could be given. Some connections which have given no trouble are shown in Figs. 39 to 43, inclusive — the last two probably being the most satisfactory. These connections give little or no opportunity to pocket water and provide for expansion. Fig. 43 could be still further improved by placing another gate-valve between the bend and the boiler.

In case of any arrangement of piping in which water is apt to pocket, proper drip pipes should be placed where necessary and the water kept drained out.

Another important matter is to keep all pressure gages about a boiler plant properly adjusted so that they will show the correct pressure; then have them connected in such a way that it is possible to tell not only the line pressure but also the pressure in any individual boiler which may be off the line and in which steam is being raised.

Frequently so little care is given the gages that

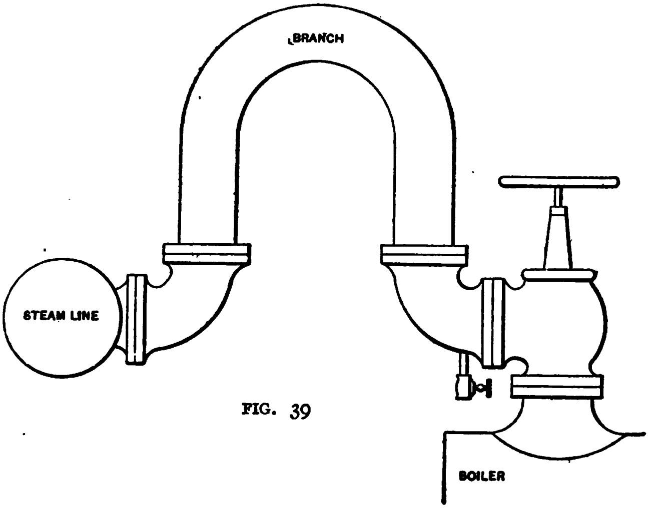

FIG. 39

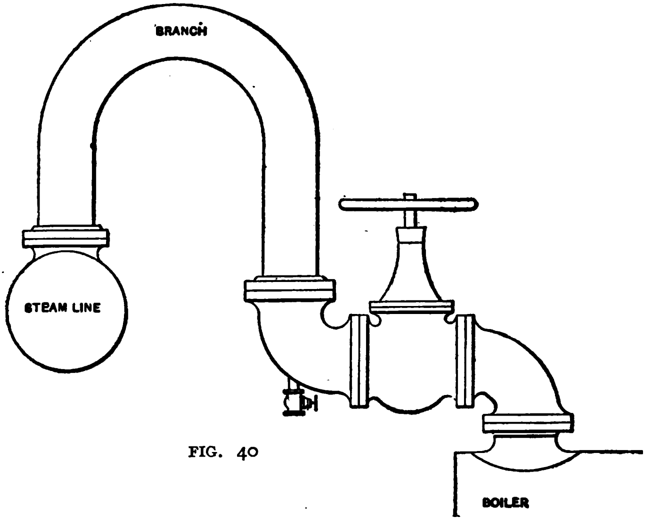

FIG. 40

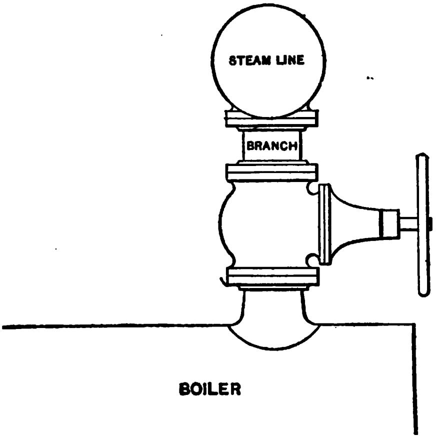

FIG. 41

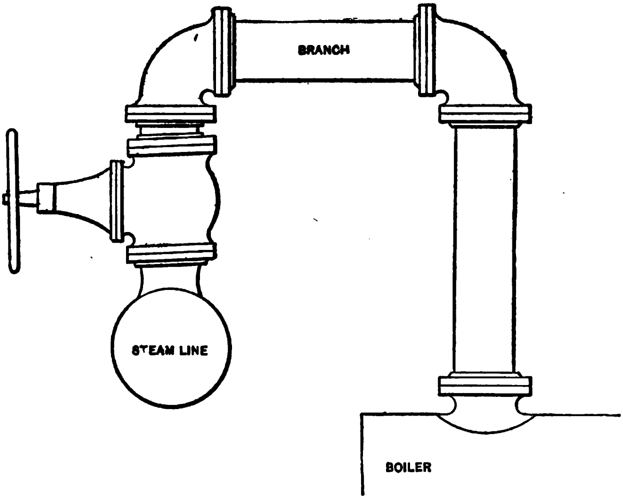

FIG. 42

there will be only one or two fairly correct for a dozen boilers and these are connected in such a way that they always show the line pressure. When steam is being raised in a boiler it is often a matter of pure guesswork on the part of the water tender to tell when the boiler is ready to turn into the line, as the boiler either has no individual gage on it or its gage is in such condition that it is practically useless. Inequality of pressure due to lack of or incorrect gages and pocketing of water in the branch pipes may cause such serious and costly accidents as described above.

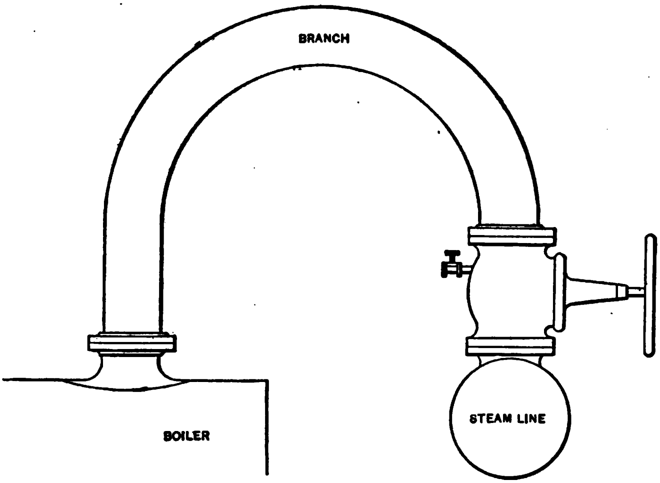

FIG. 43

VII

THE BURSTING STRENGTH OF STANDARD SCREWED CAST-IRON ELBOWS AND TEES*

It is a generally accepted fact that few, if any, of the accidents caused by the failure of pipe fittings are due only from the pressure of the gas or fluid contained in them, but are the result of combined stresses caused by the expansion and contraction of the pipe, water hammer or pipe improperly supported, any or all of these being in conjunction with a stress due to the pressure of the gas or fluid within the fitting.

A fitting may, therefore, be subjected to two classes of stresses; one, a legitimate stress, due to the pressure from that which the fitting contains, such as water, steam, compressed air, etc., and the other, due to strains caused by systems of piping improperly designed or installed. Stresses due to the former are tangible and may be estimated with some degree of accuracy, but stresses due to the latter are an unknown quantity varying with the wisdom of the designer and for which the factor of safety must provide.

The dimensions of fittings of different makers vary slightly, so that what is true of certain sizes of one maker's fittings might not be true of another's. The fittings upon which the series of experiments forming

---

* Contributed to Power by S. M. Chandler.

the basis of this thesis were made were those of a prominent valve and fittings manufacturing company.

In order that a fair average of the bursting strength of these fittings be obtained, three of each size were taken at random from a stock of pipe fittings, and the bursting pressures of the three averaged for a basis from which to determine the factor of safety. It was also thought advisable to cast a number of fittings of different sizes with one wall of the body thinner than in the standard, and to determine to what extent such a fitting was weakened and the factor of safety decreased. This was accomplished in the foundry by raising the core slightly, thereby adding to the thickness of the metal in the drag side by the amount taken away from the metal in the cope.

The result of all the tests made is shown in the accompanying table, and the strength of the weaker fittings, just mentioned, is shown in smaller type.

All fittings were tested by applying water from a high-pressure steam-pump and measuring the pressure on a calibrated hydrostatic gage, the arrangement being shown in Fig. 44.

One or two incidents which came to light during the tests may be of interest. It was found, for instance, that a joint made up of red lead could not be made tight at the high pressures unless it had had a chance to get thoroughly dry; but that one made with tallow was tight as soon as made up. The tallow was melted and applied while fluid to the threads with a brush. On account of the flat surface exposed to pressure in a plug or bushing, it was found necessary in nearly all tests to use solid plugs and reinforced bushings in order to prevent their failure before the bursting of the fitting to be tested.

In Fig. 45 are shown two curves which represent graphically the bursting pressures attained by the elbows and tees, the curve *A B* representing the elbows and *C D* the tees, the different sizes being arbitrarily denoted on the horizontal scale, with the pressures represented vertically. The line of working pressure recommended by the manufacturer is shown below at 150 pounds and is taken as a basis for calculating the factor of safety.

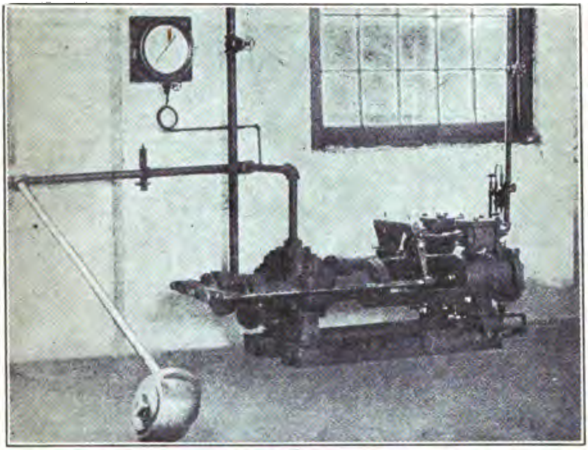

FIG. 44

It is seen that the elbows show a greater strength for all sizes than the tees, and reference to the photographs will show that failure of the tees occurred in a majority of cases by breaking a piece from the body of the tee on one side where the metal has a nearly flat surface. This flat surface is entirely avoided in the design of the elbow and undoubtedly adds greatly to their strength. The fact that a tee has a larger inside diameter, measured through the run and the outlet, than the corresponding size elbow, also partially accounts for the higher pressure required to burst an elbow.

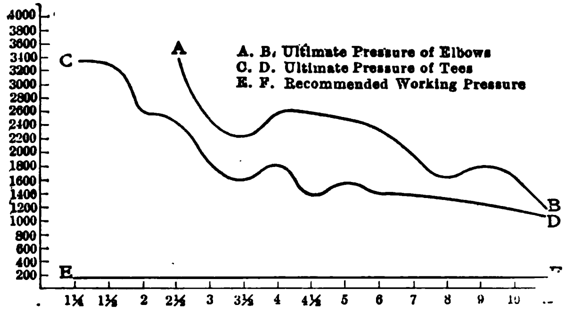

FIG. 45

The appearance of some of these fittings after fracture and the manner in which they burst may be seen in the reproduced photographs. The size and bursting pressure are given under each fitting.

The smaller elbow in Fig. 46 is one of 2½ inches, which did not burst at 3500 pounds pressure, the highest available with the apparatus. The size and pressures at which the various fittings failed as marked on each photograph and the methods of fracture as exhibited in the illustrations furnish an interesting study.

Fig. 47 shows the appearance of the T's after test.

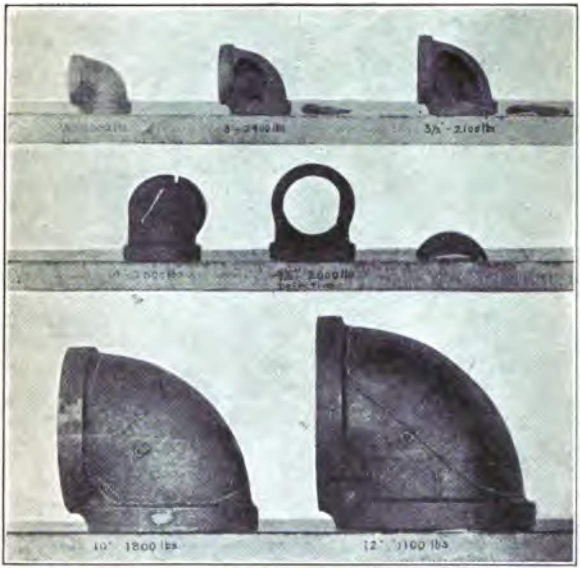
8"-2400 lbs
3½"-2100 lbs
4½" 2000 lbs
Defective
10" 1800 lbs
12" 1100 lbs

FIG. 46

FIG. 47

STANDARD SCREWED CAST-IRON ELBOWS AND TEES—ULTIMATE TEST PRESSURES

Size	Elbows		Average	
2¼	3500	3300	3400	3400
3	2400	2600	2100	2500
3½	2100	1700	2400	2250
4	2800	2500	2500	2600
4½	2000	2600	2600	2600
5	2600	2500	2500	2533
6	2600	2200	2300	2367
7	1800	2100	1900	1950
8	1700	1600	1700	1667
9	1800	1800	1900	1833
10	1800	1700	1600	1700
12	1100	1200	900	1150

Size	Tees		Average	
1¼	3400	3300	3300	3333
1½	3400	3200	2800	3300
2	2500	2800	2500	2600
2½	2400	2100	2500	2450
3	1400	1900	1800	1850
3½	1200	1500	1800	1650
4	1800	2100	1700	1867
4½	1100	1400	1400	1400
5	1700	1300	1500	1600
6	1400	1500	1100	1450
7	1400	1400	1500	1433
8	1200	1400	1300	1350
9	1300	1400	1200	1300
10	1100	1300	1200	1200
12	1100	1000	1100	1067

VIII

BURSTING STRENGTH OF MALLEABLE-IRON PIPE FITTINGS*

A NUMBER of tests at the laboratories of a prominent valve and fittings manufacturing company, to determine the bursting strength of 4-inch standard, screwed, malleable-iron tees, black and galvanized, were made by S. M. Chandler. Following are given the ultimate test pressures at which these fittings failed, together with the weights of fittings tested:

The bodies of all fittings were ½ inch in thickness.

Test No.	Black or Galvanized	Ultimate Test Pressure	Weight, Pounds
1	Black	2800 lb.	10.06
2	Black	3100 lb.	10.12
3	Black	2800 lb.	10.19
4	Galvanized	2700 lb.	10.62
5	Galvanized	3000 lb.	10.50
6	Galvanized	2800 lb.	10.75

The average bursting pressure of the black fittings was 2900 pounds, and of the galvanized fittings 2833

---

* Contributed to Power by S. M. Chandler.

pounds. As these tees were recommended for a working pressure of only 150 pounds, they therefore had a factor of safety of 19.3 for the black fittings and 18.9 for those galvanized, with a general average factor of safety of 19.1 for black and galvanized together. This is ample where the fittings are used at pressures recommended by the manufacturer and would even allow of safe usage at still higher pressures.

It is interesting to note that the galvanized fittings failed at practically the same pressures as the black. This is contrary to the expressed belief of many users of malleable fittings, who were very positive in their statements that galvanizing greatly weakened the strength of pipe fittings. Adherents to this theory claimed that dipping malleable fittings into a bath of molten zinc, and then suddenly cooling by immersing them in cold water, had a tendency to make the castings hard and brittle, bringing them back to the unannealed state. That such a theory is false is shown conclusively by the above tests, leading one to infer that the temperature to which castings are raised for galvanizing is not sufficiently high to injure them when suddenly cooled, providing, of course, that the castings have been properly annealed in the first place.

A comparison of the bursting strength of cast-iron and malleable-iron fittings as used commercially can be obtained by referring to a series of tests, in the preceding chapter. Here it was shown that three 4-inch standard, screwed, cast-iron tees were tested to destruction, failing at an average bursting pressure of 1867 pounds. As the average bursting pressure of the six 4-inch malleable fittings referred to above was 2867 pounds, they were therefore about one and a half times as strong as those made from cast iron. While tests to support this statement were only made applying to 4-inch sizes, it is probable that the same ratio would be approximately correct for all standard sizes as the patterns for both the malleable-iron and the cast-iron fittings were made from one general design.

In most cases the malleable fittings developed leakage through minute "pin-holes" at pressures ranging from 1000 to 2500 pounds. In no instance were these pin-holes visible below a pressure of 1000 pounds with the black, or 2000 pounds with the galvanized fittings, while two of the galvanized fittings sustained pressures of 2500 pounds before pin-holes developed. It was therefore evident that the galvanizing was very effective in closing the pin-holes, which are generally characteristic of malleable fittings when used at high pressures.

A feature of interest that developed in these tests was the stretching of the metal in the fittings as the pressure increased. Careful measurement of the body of the tees with calipers before and after the application of pressure showed that the diameter had increased from $\frac{1}{8}$ to $\frac{1}{4}$ of an inch. This stretch caused excessive leakage in the threads of the fittings at the highest pressures and made considerable trouble and annoyance in conducting the tests. On this account it was found advisable to raise the pressure, in making the tests, as quickly as possible, as in so doing the fittings were fractured before they had had time to stretch and leak to any great extent. This sudden application of pressure no doubt had a tendency to produce failure of the fittings at lower pressures than if the pressure had been applied gradually without shock. This difficulty could have been avoided by screwing the plugs farther into the tees when the pressure had reached a point slightly below that at which the fittings were expected to fail. Such a procedure would, however, be accompanied with danger, as any air entrained in the tee might cause a disastrous accident with probable loss of life in case of premature bursting of a fitting.

The accompanying sketch, Fig. 48, shows characteristic fractures of the fittings tested. Most of the tees failed as in Test No. 5, cracking through the beads at one end and the side outlet of the fitting. No pieces of metal were entirely separated from the tees when they failed, as was the case with the cast-iron

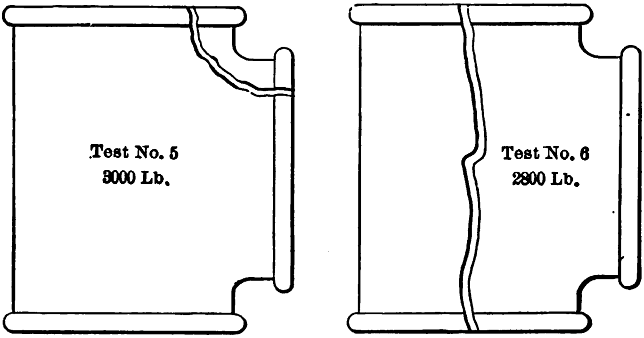

FIG. 48

fittings. The malleable-iron fitting, being tough and slightly elastic, was simply torn apart while the cast-iron fitting, being more brittle, broke in many cases into separate and distinct pieces. These tests show plainly the superiority of malleable over cast iron for use in the manufacture of pipe fittings of small size.

IX

PIPING FOR A STEAM PLANT

THE accompanying sketch, Fig. 49, shows a piping arrangement which meets all the requirements of a small plant.

The piping is so designed that any one of the three units shown can be used for boiler feeds, or any two at the same time for any other purpose, such as in case of fire. In this case the two pumps can be used to force water on to the fire and the inspirator used as a boiler feed. This drawing may appear complicated, but a little study will simplify it. In case the pump P is used to keep the elevated tank T full of water the pump P' used to supply the boilers with water. By opening the valve B'''' water is drawn from the well and is forced to the Tank T by the pump P, or by closing valve B'''' and opening valve C' water is taken from the city main W to fill the tank T by the pump P. By opening valves C'''', D, D'', F'' and G, valves C, B''', being closed, water is taken from the well, forced through the heater and through the pipe S to the boiler. In case the pump P, as before, is used to keep the water up in the tank T and pump P' used in case of fire, the inspirator can be used to feed the boiler. Valves B''', S'' and C'' are closed, valves B'',

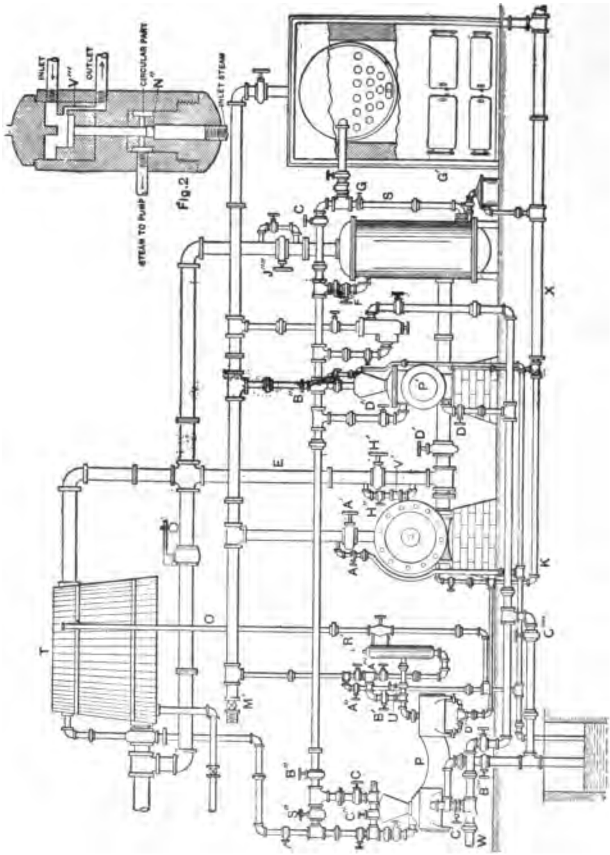
INLET
OUTLET
CIRCULAR PART
STEAM TO PUMP
INLET STEAM
Fig. 2
T
O
E
S
G
C
X
K
P
W
U

FIG. 49

C, D and C'''' are open, and pump P' forces water from the well through the nozzle N to the fire. With the valve B''' closed, water is taken from the well and forced into the boiler by the inspirator through the heater, or can be forced to the boiler and by-pass the heater by opening valve F'''', closing valves F'' and G. In case we should want to take water from the well for the tank T by pump P and city water for fire through pump P' and boiler feed through inspirator; by closing valves C' and C'''', opening valves B'''' and C''', water is taken from city main for fire by pump P' and boiler feed by the inspirator. It will be seen that by opening and closing of the different valves, the pump P or P' can be used to fill the tank or used in case of fire and still leave one unit for boiler feed. In some cases, as shown by the drawing, it is necessary to have a pump regulator; for instance, in laundries, where the water in the tank T is used for washing purposes. The tank T is open at the top, the exhaust steam after passing through the heater R is exhausted through bends or a coil placed in the tank T. This heats the water in many instances to the desired temperature. A regulator is placed on the steam-pipe, as shown at R', and works automatically. In starting this regulator first, valve A'' is opened and the water is all blown out of the steam-pipe shown. Then the valve A'' is closed and the valve A''' opened with the valve B' closed. The operation of the regulator is as follows: When the tank is partly empty or the water below the overflow pipe O, steam enters at the point marked "Inlet steam," in Fig. 2, under the end of the piston N'', raising it up.

By so doing, small ports are uncovered and steam is admitted to the circular part of the casting and from this point to the pipe marked "Steam to pump." When the tank T is filled to the proper hight, water will escape out through the pipe O on the tank to the pipe marked "Inlet," in Fig. 2. The weight of the water acting on this piston, with four times the area of the piston N'', forces the piston down against the steam pressure, closing the steam ports and stopping the pump. The water escapes through the port V''' to the pipe marked "Outlet" and back to the well, as shown. As soon as the water in the tank drops below the entrance of pipe O in the tank, the water escapes, reducing the pressure on the piston N''', the steam pressure raises the piston N'' and the pump is started up as before. In case the regulator gives out, the pump can be regulated by hand by the valve B' with the valves A''' and U closed. In starting the engine, the valve A is first opened and the steam-pipe is cleared of water. Valve A is then closed and valve A' opened, just enough to warm up the cylinder with cylinder cocks open, which in this case are connected at K to the drip or sewer pipe. After the cylinder is warmed up, the engine started and load on, the cylinder cocks are closed. It will be noticed in this drawing that the engine exhausts into the heater, but in case the heater cannot be used, by closing valves D' and J'''' after opening valve H', steam is exhausted up the pipe E to the tank T. When the back pressure exceeds what the back pressure valve is set for, it opens and the tank T is by-passed, thus relieving the pressure.

It will also be noticed that at the bottom of the heater at *G′*, a trap is connected which keeps the heater clear of water of condensation. All drips or drains from the steam main and inspirator are piped to the well, and all drains from exhaust pipe drips from the cylinders are piped to the sewer or pipe *X*. At *H′* a small valve *H″* is used to keep pipe *E* clear. A check-valve is placed in this small pipe at *V′*, which opens toward the basement and closes upward. This allows the water to escape from the pipe *E* and prevents the exhaust steam from passing through it. When necessary, the little valve at J″″ can be opened to drain this pipe into the heater. The pipe at *M″* can be used for anything that is needed. In this design all valves and unions are placed in the piping, so at any time any part can be taken down without interfering with the running of the plant. Again, it will be seen that only one valve is placed below the basement floor.

X

ACCIDENTS DUE TO FAULTY PIPING *

ACCIDENTS to steam-engines due to a sudden influx of water from steam, exhaust or drip pipes are so frequent that it may be interesting to review some of the causes due to defective construction, showing good and bad practice in piping to and from engines.

Boilers at times, for causes not always too obvious, prime, and greater or less quantities of water are carried over with the steam to the engine; this added to the condensation of the piping and cylinder not infrequently causes the wrecking of the engine.

Many engineers will point to the main steam line or header and say that they had it put in with a slant of three or four inches, so that all water will run back toward the boilers and therefore it is impossible to get water over into the engines.

This amounts to practically nothing against the current of steam through the pipe in the opposite direction, especially when a heavy load is thrown on, or in other words, just at a time when an accident due to water is liable to occur. Such a line will drain nicely when no steam is flowing.

In some cases we find large, long headers without a

---

* Contributed to Power by Thomas Hall.

sign of a drain and with steam lines rising from the top. In such cases, when the engines are running under light loads, water will collect in the header and when a sudden heavy load occurs it will be thrown over to the engine in slugs.

Reservoirs, separators, relief valves, explosion diaphragms, etc., are all good things, but none are absolute proof against accidents due to water in large quantities. In addition to such safeguards the greatest precautions should be taken in the design of the piping system. It is not at all a simple or easy matter to lay out a piping system with separators, etc., that will be accident-proof, in fact, few engineers are really capable of laying out a large piping system to the best advantage.

When an accident does occur it is often difficult to prove to the satisfaction of the plant owner the real cause, though it may be apparent to one experienced in such cases. The engineer in charge is not likely to give information which may reflect upon himself, and his disposition is rather to get on the defensive than to assist in locating the real cause. In other words, the tendency is to put it upon the engine builder, claiming some defect in workmanship, material or design.

The forcing of boilers beyond rating has a tendency to promote carrying over water. Some types are more liable to do this than others. Small steam-pipes are objectional because the necessarily high velocity of the steam materially assists in picking up the water and sweeping it over to the engines. The larger the pipes or receivers, the slower the flow of steam, and consequently the greater the tendency for it to deposit the entrained water and vice versa.

The condensation in a large piping system is enormous, hence it becomes of very great importance to have the pipes thoroughly protected with a good non-conducting covering both for safety and economy.

The greatest care should be taken, when steam traps are used to drain steam lines to engines, to see that they are in the best working condition. These traps are placed in steam lines to perform certain work and when they fail to do this work they endanger all the machinery on the lines they are intended to drain.

Water glasses in separators should be considered as important as those that show the hight of water in the boilers. How many times one enters a plant and sees the gage glass missing on the separator.

Many accidents to engines can be traced directly to firemen allowing the water-level in the boiler to run too high. Sometimes this carelessness reaches the point of flooding the boiler, when the wrecking of the engine is almost sure to take place. At times, if the water is above its normal hight, a heavy load may be thrown on the engine, when the very rapid ebullition of the water, assisted by the high velocity of the steam, causes it to be thrown over into the piping system.

It is safe to assert that as many of the accidents which occur to engines are due to poorly constructed exhaust and drip-pipes as to any other cause. Several sketches are here reproduced, showing bad treatment of both steam and exhaust, from actual cases in which the cause of the accident can be clearly traced.

Figure 50 shows an arrangement of piping where an accident occurred damaging an engine to the degree of an almost absolute wreck. The defect in the piping is at once apparent and shows how carelessly exhaust and steam piping at times are arranged.

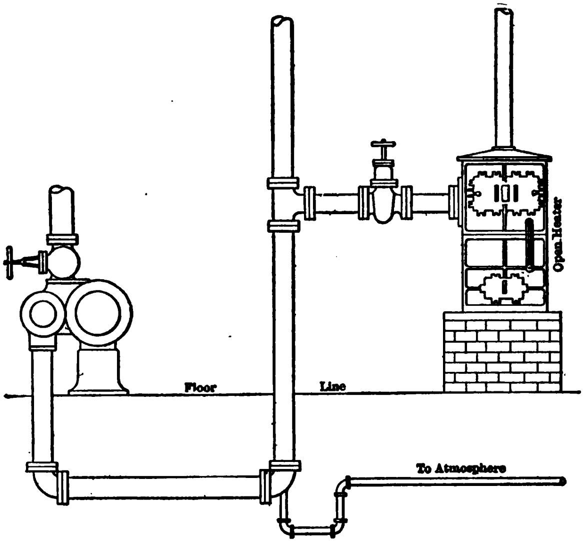

FIG. 50

The size of the drip-pipe was one inch, entirely too small for an 8-inch exhaust, and while this was supposed to take care of all the water coming from the engine, the outlet of this pipe was raised to a line corresponding to the center line of the exhaust-pipe. This pipe should also have been tapped into the lowest part of the line instead of half way up the elbow.

Under these conditions satisfactory drainage was impossible. The exhaust-pipe filled with water, and on starting up was drawn into the cylinder, causing the breakdown.

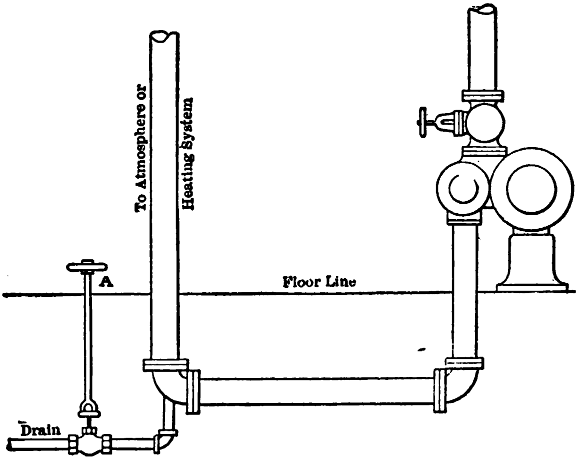

FIG. 51

Accidents have also happened with this arrangement of exhaust-pipe and open type feed-water heater, especially where the heater has no over-flow or other arrangement to prevent the water rising to the hight of the exhaust-pipe and flowing over into the engine.

Another manner of connecting the exhaust-pipe is shown by Fig. 51. This arrangement is very much used, but if care is not taken in operating the valve *A*, damage to the engine is likely to result. Such drainage depends too much upon the memory and judgment of the engineer.

Figure 52 shows a case where an accident happened to engine No. 3, which was of the slide-valve type. The cause was evident to the expert sent to investigate. He reported that while engines No. 1 and No. 2 were not running, the 10-inch header filled with water up to the level of the 3½-inch pipe, then when a heavy load was suddenly thrown onto engine No. 3, the water was carried over into it, causing the breakdown.

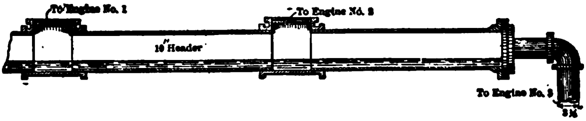

FIG. 52

The operators of the plant were notified that unless a change in the piping was made the same accident was certain to occur again. Though they contemplated making the change, it was put off for a more convenient time. Exactly the same accident happened a second time some ten days later. The change was then made and no further trouble has occurred, although the engine has been in continuous operation over two years since that time.

The change included a drop leg draining the header by the boiler feed-pump, a separator above the engine throttle and a change of the 3½-inch pipe to the top instead of the end of the header.

An engine at the end of the line as this one was is always liable to get the worst of it.

Figure 53 explains itself and shows another erroneous method of terminating drip-pipes. The idea of this arrangement was to get the use of the warm water. Neither should exhaust drips be connected direct to sewers, as the sewer is likely to clog and seal the end of the exhaust-pipe with water, allowing the engine to lift it back into the cylinder in shutting down. This also applies to installations where drips are run too far into the hot well.

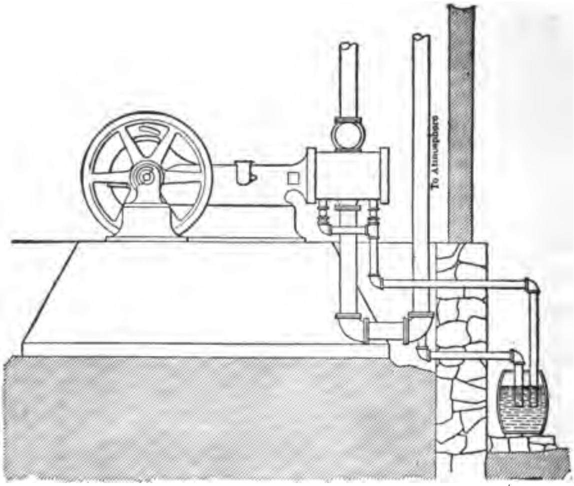

FIG. 53

Instances have been known where the drips from the low-pressure cylinder of a condensing engine discharged to the atmosphere instead of to the condenser. Care should be taken that these pipes do not connect to the condenser or exhaust-pipe at such a place as will make it possible for water to be drawn into the cylinder.

Figure 54 shows a line of piping by which steam is supplied to three engines. This system is frequently used with satisfactory results. The entrained water and that of condensation is carried with the steam and considerable quantites may pass over to the header.

Any large quantity of water, such as is occasioned by the priming of the boilers, is likely to be taken care of, due to the steam header construction, it being continued past the last engine and a drop leg, *A*, provided as large or preferably larger than the steam header and run down six to twelve feet and drained.

Figure 55 shows a good construction. The water leg should be made at least as large as the steam-pipe and about twelve diameters of the pipe in length. The boiler feed-pump furnishes a good drain in case the trap should fail to work. Instead of the drop leg a separator may be used, as in Fig. 56.

The arrangement shown in Fig. 55 will take care of a greater dose of water, though it is not so likely to take out entrained moisture.

A valve is a most unsatisfactory method for draining separators, drop legs, reservoirs or main headers. This method is dependent entirely upon the memory and judgment of the attendants. If opened sufficiently to insure thorough drainage, they are very wasteful of steam. It not infrequently happens that where such

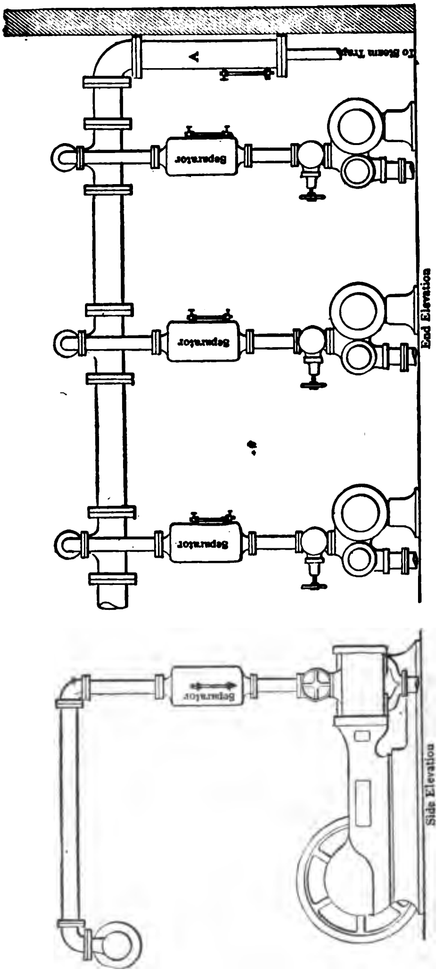
To Steam Trap
A
Separator
Separator
Separator
End Elevation
Separator
Side Elevation

FIG. 54

a method of drainage is in use, the engineer forgets to open the valve or he may not open it enough. Sometimes we see such drains with no gage glasses anywhere except on the boiler. There had been, perhaps, one in the separator, but it was broken and not thought necessary to put it in again. What was the gage glass put there for if it was not necessary?

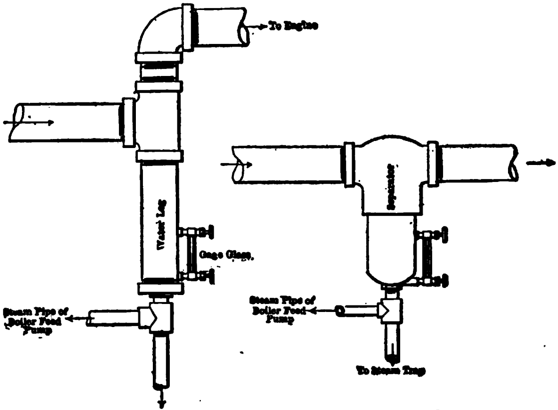

FIGS. 55 and 56

STARTING AND STOPPING THE ENGINE

Engines should under no conditions be started until they are thoroughly heated by blowing live steam through each end alternately and the steam-pipe and cylinder thoroughly drained of all water; drips should be left open until load is put on and then closed.

In shutting down it is preferable to leave drip-valves closed until the engine is stopped. If the throttle is provided with a by-pass valve, it is well to close the throttle and stop the engine with the by-pass. By this means the engine can be brought gradually to a standstill, avoiding the pumping effect of the piston which occurs when the throttle is closed off entirely. If the throttle be closed quickly the momentum of the flywheel carries the piston back and forth for many strokes, causing it to act like a pump, so that any water with which the drips connect, or water which may be standing in the exhaust-pipe, is liable to be drawn into the cylinder and trapped when compression occurs.

Many accidents have been caused by simply warming the engine up at one end only. For instance, the engine is placed in a starting position at the cylinder head end and steam turned on. While the steam is heating the head end, water collects in the crank end and remains there. Then, upon starting the engine, this water is trapped in the crank end.

Frequently accidents happen to engines through confusion in condenser valves. The safest way is to start the condenser first, which frees the exhaust-pipe and drips of water; then close the valve in the exhaust pipe and start the engine non-condensing, exhausting through the relief to the atmosphere, throw on a partial load, and then open the main exhaust to the condenser, when the engine is ready for the full load.

In the case of high ratio and triple and quadruple expansion engines, however, it is often necessary to have the condenser in operation to get started. In such cases, presuming the engine to be warmed up and drained, start the condenser, keeping the main exhaust valve between the engine and the condenser open. After the condenser has taken care of all water in the pipes and drains, start the engine slowly, giving it plenty of time to reach full speed. After the load is on and the engine is up to full speed, close the drains.

In stopping, keep the condenser in operation until the engine is shut down, then stop the condenser; this procedure will avoid possible accident.

The conclusions which may be drawn from the above are:

Avoid pockets in both steam and exhaust piping as far as possible. If these cannot be entirely avoided, see that efficient means for draining these pockets are provided. Do not use cracked valves for drains.

Use drop legs, reservoirs or separators or preferably a combination of either a drop leg or reservoir in the main header, with a separator above the throttle. Connect these up with efficient steam traps, or better still, as shown in Figs. 55 and 56.

Where a main header with several steam lines leading therefrom is used, always lead off these lines from the top of the header, and above all see that the header is effectively drained. It is advisable to use more than one drop leg in such a header.

Thoroughly cover all steam-pipes with a good non-conducting covering.

Keep the exhaust outlet below the cylinder if possible. If this cannot be done see that the pocket in this pipe is effectively drained, preferably by a free open drain one-fourth the diameter of the exhaust-pipe. See that the cross pipe in a compound engine is effectively drained. All separators, steam reservoirs and water legs should have gage glasses, and these should be kept in operative condition.

If steam traps are used for drains make sure that they are operative.

To sum up, so design the system that a minimum of drains is required and make these automatic as far as possible. Do not add to the responsibilities of the engineer when it is unnecessary. Some systems seem to be designed with a view of making as many things for the engineer to look after as possible. It is little wonder that he should have an accident occasionally in such cases. A proper system is greater in first cost but entails less annual expense. Safeguards are a good insurance investment.

Do not connect the drips with drains or any other place where there is a possibility of stoppage and consequent flooding. Do not connect throttle drains, separator drains and engine drips together. Do not connect drains from two separators together; in fact, it is rarely advisable to connect up together any two drips into one line. It is better to run each independently to its own free outlet or trap, or run them independently to a large receiver tank, which must be effectively drained by a trap or other means. Where the boilers are located sufficiently far below the main steam header and separators to overcome any possible difference of pressure, these may connect to the boilers below the water-line, care being taken to see that they are so connected that they will operate properly when one or more boilers are shut down.

Provide ample-sized steam-pipes, equip the engine with explosion diaphragms or relief valves. Warm the engine thoroughly before starting, with all drips partially open. Turn the engine over slowly some minutes before bringing up to full speed, then close drips. Shut down slowly, and close the drips after closing the throttle.

XI

PRACTICAL SUGGESTIONS *

THE writer was recently shown a simple and reliable device for ascertaining at a glance whether a steam trap is performing its duty properly.

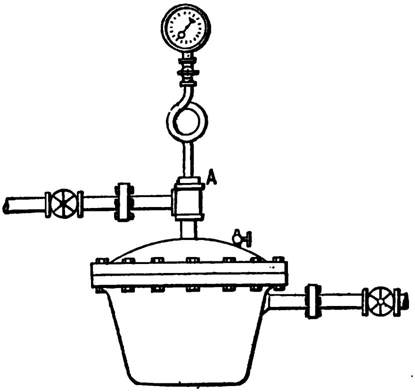

FIG. 57

The trap in question is attached to an apparatus, the efficient operation of which necessitates the immediate removal of all condensation. The failure of the trap to act would cause the loss of several hundred dollars' worth of stock.

As shown in Fig. 57, a tee is placed in the discharge

---

* Contributed to Power by C. W. Oakley.

pipe at *A* in place of the usual ell, and a steam-gage is connected at that point. As the trap discharges the gage indicates a rise in pressure according to the velocity with which the water is discharged.

The gage need not be an accurate or expensive one, as any old gage which has been discarded on account of inaccuracy will answer the purpose providing it will indicate a rise and fall of pressure.

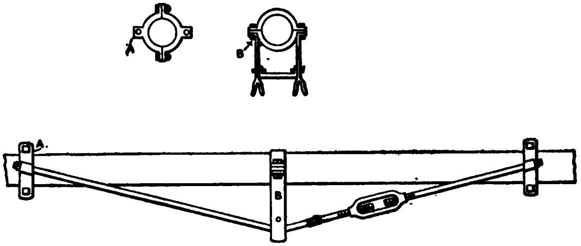

FIG. 58

Considerable difficulty is sometimes encountered in supporting long lengths of steam or water pipe, which cross yards, roads or other places where it is impossible or inadvisable to place hangers or posts for that purpose.

Figure 58 illustrates a method of overcoming the difficulty by providing a truss made of steel or iron rods on each side of the pipe, secured at the ends to suitable cast or wrought-iron clamps having lugs on each side to receive the rod ends, as shown at *A*, Fig. 58.

A collar or clamp is placed in the center of the span, from which risers extend to the truss rods, as at *B*,

Fig. 58, the lower ends of the risers being forked to receive the rods.

Care must be taken in the case of steam or hot water pipes not to draw the truss rods up tight until the maximum temperature is reached, otherwise the increased length of the pipe due to expansion will draw the rods too tight and cause the pipe to buckle in the middle.

One of the problems confronting the engineer in the installation of large vertical boilers where the lack of room compels the making of close connections, is that of properly supporting the steam piping so that there will be no undue strain on the fittings whether the boiler is under steam or lying idle.

Take the boiler in Fig. 59, for instance, where the expansion vertically when under 90 pounds steam pressure is $\frac{5}{8}$ inch. It will be readily seen that any non-compensating support which would properly carry the weight of the pipe and fittings when cold would be utterly useless when the boiler was in service. Likewise the same support adjusted to carry the piping when in use would subject the pipe and fittings to an enormous strain when the boiler cooled down and the hight decreased.

To overcome this difficulty, Mr. F. W. Harding, a member of the American Society of Mechanical Engineers, devised the support shown in the sketch, which consists of a bracket or stand *A*, which forms the fulcrum; the lever *B* and the carrier *C*. If desirable, the pipe may be suspended by a hanger from the lever instead of the plan followed in Fig. 59.

The effective weight of the lever being equal to the weight of the pipe and fittings, the pipe will at all times be properly supported and free to rise and fall with the expansion and contraction of the boiler.

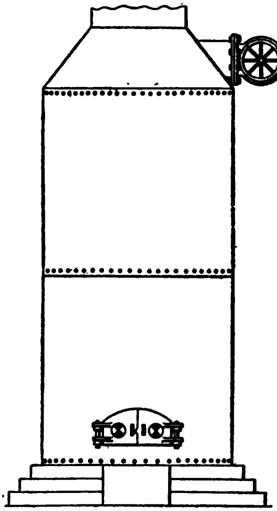

FIG. 59

It will be noted that the flat bearing surfaces of the bracket and carrier allow the trunnions to roll with the least possible friction. In case of difficulty in ascertaining the exact weight of the pipe and fittings, a movable weight may be placed on the lever and adjusted to meet the requirements.

XII

PRACTICAL SUGGESTIONS *

While descriptions of the piping in large plants are always valuable to the progressive engineer, suggestions concerning the location and operation of smaller lines cannot fail to help the working engineer about his every-day duties.

Figure 60 illustrates the 8-inch exhaust-pipe and feed-water heater of a certain steam plant, as originally planned. When erected it was not acceptable for the following reasons. The entire weight rested on cast-iron legs that in turn were placed upon a light floor which it was not practical to strengthen enough to be safe. It was necessary to locate the drip-pipe shown, as high as possible in order to properly drain the exhaust-pipe, as the available "fall" was slight.

The ell was replaced by a tee, as shown in Fig. 61, which rests upon a solid foundation, thus making the cast-iron legs unnecessary, and providing a much better support for the whole, which includes piping above the heater, not shown in the cut. The drip-pipe is now several inches higher than before, although it is still below the bottom of exhaust-pipe. Packing in the three joints between heater and foundation, is now

---

* Contributed to Power by W. H. Wakeman.

held firmly in place by the weight resting upon it, which is an important advantage, as it is practically impossible to keep the nuts tight, for some of them are not accessible.

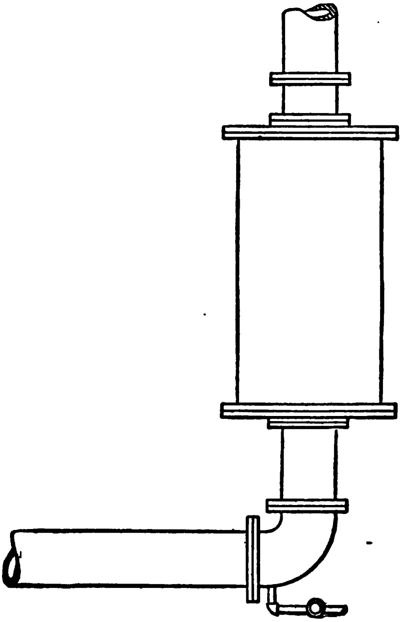

FIG. 60

Figure 62 illustrates another case where heavy piping is supported on a foundation instead of being suspended from floor timbers according to common practice. The lower horizontal pipe, 5 inches in diameter, carries exhaust steam from a heater into the main exhaust-pipe. The larger pipe above it, 8 inches in diameter, also discharges exhaust steam into the main vertical exhaust-pipe, 10 inches in diameter, which is continued upwards for about 35 feet through the roof.

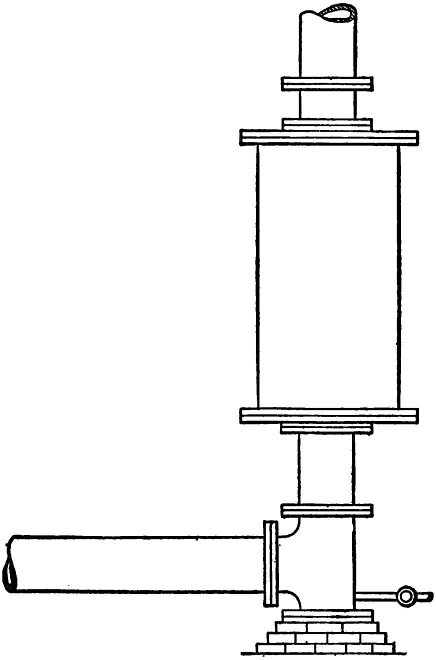

FIG. 61

The smaller vertical pipe shown in the cut is 3 inches in diameter, although a 1-inch pipe would easily have carried off all water coming to it. It was made large in order to serve as a support to the piping above it, and as it rests upon a solid foundation all of the joints

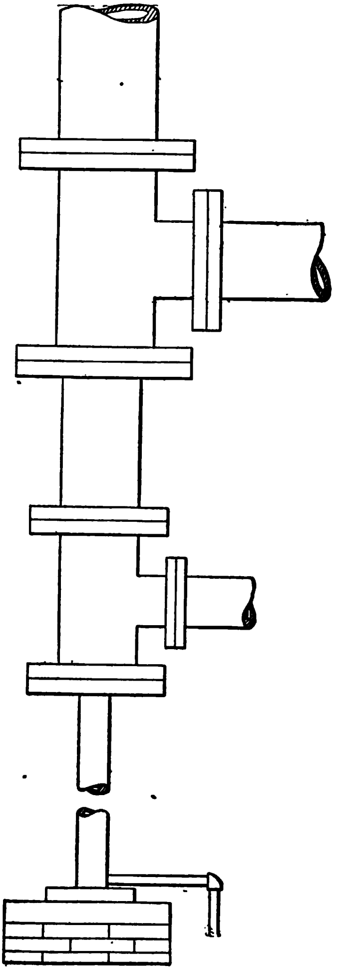

FIG. 62

shown are made secure (against a light pressure) by the weight resting upon them. As the vertical pipe is located in a corner, it will be plain that the bolts in these joints cannot be "followed up" at pleasure.

Figure 63 shows part of a steam drum 10 inches in diameter into which steam from a pair of boilers is discharged through tees, one of which is shown in the cut. Steam is taken out through the 5-inch pipe at the left, and as the bottom of it is much above the bottom of drum, it leaves a "pocket" for the accumulation of water, for the only drip provided is connected into the head of drum as illustrated, and even this is not arranged to act continuously, as it supplies steam to run a pump, and when this is shut off the drum is not drained, therefore is dangerous. A drip-pipe should have been connected into the bottom of drum and attached directly to the boilers so as to provide an automatic drain at all times.

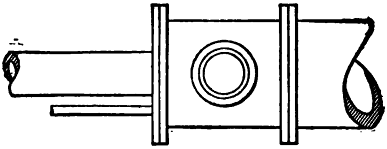

FIG. 63

Figure 64 illustrates a 3-inch pipe in which water hammer caused much trouble. The small upper pipe supplied steam for an injector, but the drip-pipe below it was not put in when the line was first used. This proved a partial remedy, but did not eliminate all danger, the cause of which will be understood by reference to Fig. 65, which is the line connected into the tee in Fig. 64.

This pipe was higher at the right (which is practically a "dead end," as the outlets are closed for a greater portion of the time) than at the drip in Fig. 64, therefore when it was opened, water from this "dead end" flowed towards it, but was met by steam and hurled back with great force.

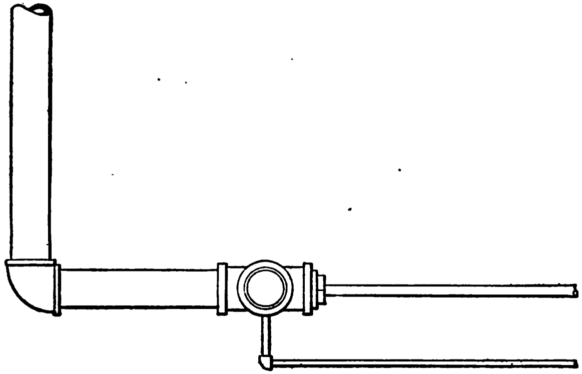

FIG. 64

Putting in the drip-pipe shown at the right in Fig. 65 did not prove a remedy until this end of the line was lowered, the "dead end" becoming the lowest point, when all condensation, even after the drip-pipe had been closed long enough to cool the entire line, could be drawn off without causing water hammer.

It will be noted that the small pipe (shown in Fig. 64) used to supply the injector with steam, is not properly located, as it takes steam from a larger pipe in which much water collects, and no provision was made for draining it when first put up.

Figure 66 illustrates the blow-off pipe of a steam boiler, as we frequently find them in practice. The first turn outside of the brick wall is an ell, consequently if mud and scale collect in the horizontal pipe which passes through the combustion chamber, there is no way to remove them, except to take down the pipe.

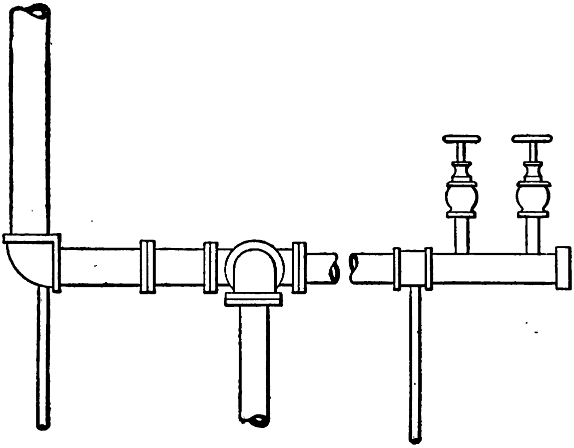

FIG. 65

A gate-valve is located next to the boiler, followed by a nipple and an asbestos packed plug cock. The valve is provided for use in case the cock leaks.

Figure 67 illustrates the blow-off pipe, etc., preferable to the arrangement in Fig. 66 The first turn outside of the brick wall is an ell with a plug in the

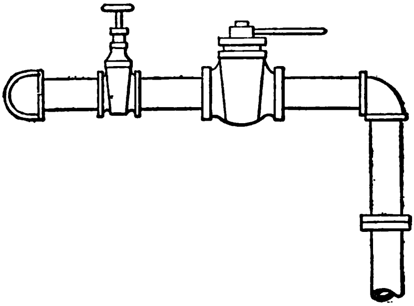

FIG. 66

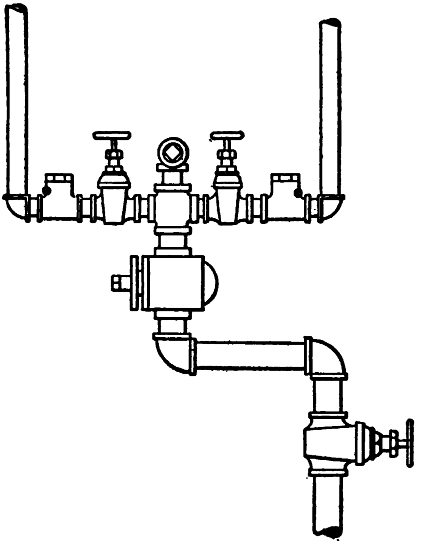

FIG. 67

outer end of it, as shown. When the boilers are washed out, this plug is removed, thus exposing the interior of pipe for cleaning.

The right-hand valves and pipe constitute a drip from the main steam drum, therefore this important part of the steam piping is kept free from water at all times, and this passing in through the blow-off pipe keeps it safe from burning out when the fire is forced.

The left-hand valves and pipe constitute the cold water supply for filling the boiler after it has been cleaned.

The feed-water pipe enters the front head, and discharges at the rear in the usual way. The advantages of this plan are as follows:

Suppose that one of these boilers is emptied, washed out with hot water, and it is necessary to refill it at once. In this case front feed is used, as steam from other boilers heats the feed-water, and the lower half of the boiler is not cooled, consequently no harm results from uneven contraction.

If the boiler is cold, the rear feed is used, bringing in cold water; therefore the lower half of the boiler is not warmed while the top remains cold, therefore no harm is done by uneven expansion. It is just as bad to run hot water into a cold boiler as to run cold water into a hot boiler.

Below these valves is an asbestos packed plug cock, and further down a gate-valve. Have them arranged according to this plan, so that when the valve leaks it can be taken off and repaired, as the cock alone can then be used.

It will be noted that this arrangement of cock and valve is directly the reverse of that illustrated in Fig. 66, the reason for which is that the valve is much more liable to leak than the cock, hence the best one is placed next to the boiler, although some engineers prefer the plan shown in Fig. 66.

When these cocks were first put on the market they were designed so that the plug could be given a complete revolution, but after due consideration of the matter, it was concluded that the best way was to give it one-quarter of a revolution only, and to always turn it through the same quarter, as that is sufficient to open and close it.

This method of operation reduces the leaking to a minimum. This does not agree with the experience of those who turn them any way that they happen to, but this plan seems to give better results than they secure. The improved kind cannot be given more than one-quarter revolution.

Figure 66 does not show the best possible location of the gate-valve, as its stem is in a vertical position. The consequence is that when mud is washed out of the boiler (under no pressure) some of it collects in the bottom of this valve and stays there until the disk descends and packs it more firmly into place. At the same time it prevents the valve from closing tight.

Having tried this plan, found it unsatisfactory and discarded it for that shown in Fig. 67 constitutes a good reason for favoring the latter, in which the stem is in a horizontal position, and no "pocket" is left in the valve to cause trouble.

With either of the above plans in use, when the boiler is blown down under pressure, the gate-valve should be closed first, because, as its disk nears the seat, water rushes through the space at high velocity, thus tending to keep the passage clean.

XIII

STEAM-PIPE CONDUITS

It is not good policy to bury pipe in earth, stone or concrete.

For a temporary job the best plan is a wooden box about 2 inches larger all around than the pipe, with stands made of flat iron to support the pipe in the center of the box, as in the sketch, Fig. 68.

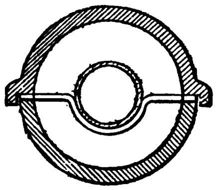

FIG. 68

After the pipe has been tested and made tight, fill the box with mineral wool. If you wish to economize on mineral wool, the corners of the box may be filled out as shown by the dotted lines, but unless you are located where the wool is very expensive, one cost will about balance the other.

Do not use wool made from blast furnace slag, as it usually contains considerable acid, which is severe on the pipe. Get the kind that is made direct from the rock, and you will have better results.

Do not pack the wool, but be sure that the box is full, especially under the pipe, or the wool will settle down and leave the top of the pipe partially uncovered.

As the wool is practically threads of glass, care must be taken to keep it out of one's eyes or cuts or sores on the hands.

Wool is perferable to the sectional covering for this class of work, for the reason that repairs to the pipe are more easily made, and the expansion and contraction of the pipe will not break it up where the pipe moves through the supporting stands.

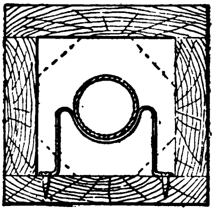

FIG. 69

The cover should be fastened down with screws, so that it may be readily removed without breaking, and brass screws are preferable, as they will not rust rapidly.

Figure 69 illustrates a scheme for underground piping in boiler-rooms, with good success, and there is no reason why it should not be all right for long lines of pipe where a permanent conduit is wanted. It is not advisible to use the more expensive one of brick or concrete.

It is made up of special vitrified tile, like a sewer pipe split longitudinally, with ball and socket joints, which may be made up with cement for the bottom half. But in order to drain off any water that may find its way into the conduit, it would be advisable to leave a joint free every 8 or 10 feet.

Whichever style of conduit is used, it will be advisable to place a few inches of broken stone under the same to provide for drainage, and provision made for draining away from the trench any water that may collect in it.

XIV

HINTS ON PIPE FITTINGS*

THE engineer often uses up considerable time in hunting around for a right-and-left coupling, nipple, box or flange union in order to complete some connection between lines of pipe that must be joined before the job can be considered complete. A coupling known as the "long screw," shown in Fig. 71, made from a piece of pipe and two common pipe couplings, will help him when nothing else is available. The use even of the left-hand pipe die is not required. The connecting nipple is threaded at one end in the usual manner, as at *A*, Fig. 70, and the other end is threaded long enough to allow the coupling *B* and the lock-nut *C* to be screwed away back upon it, as shown. The lock-nut *C* may be made by cutting off a piece of common coupling with the pipe tongs or hack-saw or in a lathe. The connection is made as shown in Fig. 71, where *C* and *D* are the ends to be joined. The end *A* of the

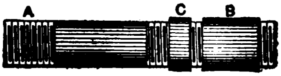

FIG. 70

---

* Contributed to Power by Wm. Kavanagh.

coupling nipple in Fig. 70 is connected to *C* by a common nipple and made up tight. The end of *D* is brought up close to the other end of the coupling nipple, and the coupling *B*, which has been turned on to that nipple far enough to allow the ends to come together, is backed off until it is tight upon *D*. The lock-nut *C* is then turned up tightly against *B* with a piece of lamp-wick saturated with oil and plumbago between.

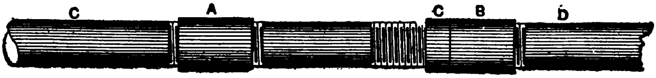

FIG. 71

The objection generally raised against the long screw is that it is difficult to keep steam tight, on account of the packed joint and because the threads cut on the long screw are parallel and devoid of the taper which is so essential in steam-tight work. Nevertheless, such a coupling or union has its advantages, because it can be "home made," can be inserted in almost any position or line of pipe, and, when properly put together, will remain steam tight under varying conditions, and gives a finished appearance to the job.

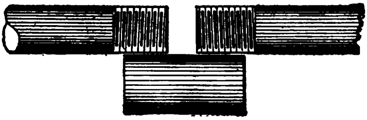

FIG. 72

Probably there is no method employed to connect a line of pipe more substantial and reliable than the right-and-left coupling shown in Fig. 72. In order to connect up a right-and-left coupling we must first discover the difference between the number of threads the coupling will absorb between the right and left sides; and in order to find this difference we proceed as follows: First screw the coupling on the right-hand thread as far as it is apt to go and be steam tight. When this position has been reached, draw a line on the coupling and pipe, then screw the coupling back and note the number of times that the line on the coupling passes the line on the pipe. Suppose the coupling revolves seven times; now screw the coupling on to the left-hand side as far as necessary to be steam tight, proceed as before, and note the number of turns. Suppose this number to be five. Now subtracting five from seven gives us a difference of two turns, and we see that our coupling must be screwed on to the right-hand thread two turns before being started on to the left. After we have screwed our coupling on the right thread two turns we must then bring our pipe in line and enter the left thread, then screw up with a Stillson or pipe wrench until the coupling is tight. In general, when steam fitters employ the Stillson wrench or pipe tongs to force the difference between the threads that the coupling will absorb, they allude to "expanding the coupling." Generally a good job can be done by finding the difference by screwing the coupling on by hand and noting the difference as before described. Should either end of the coupling leak after it is screwed up, it probably can be made tight by screwing up a little more; if not, the coupling must be unscrewed and another turn or half a turn added to the end that leaks. The number of threads appearing at both ends of the coupling may not be equal, but this will be of no importance providing the coupling is steam tight. Red lead should never be used in making steam-tight joints. Oil and graphite will be found far more satisfactory, and should there be any occasion to break a joint, it can be done with far greater ease and less liability of crushing the pipe.

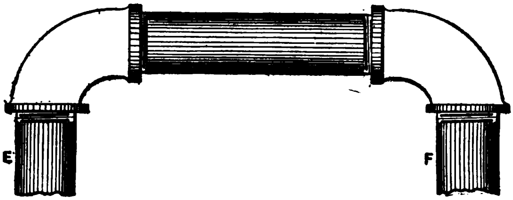

FIG. 73

Figure 73 shows a case where the right-and-left nipple can be employed. After the elbows are in position and pipes *D* and *F* are tried for parallelism, we can then determine the length of our right and left nipple. Of course this length depends to a great extent upon the amount of spring between pipes *D* and *F*. To make such a connection the elbows are threaded one right- and the other left-handed, and the directions given for joining the right-and-left coupling are equally applicable in this case.

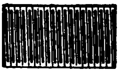

FIG. 74

Figure 74 is known as the parallel nipple, so called because there is no taper to the threads. Such a nipple is generally used in making a very close connection between a tee and an elbow, or between two elbows or two tees. It can be "home made" by running the die along a piece of pipe a little over the required distance and then cutting off the right length. This nipple should be used sparingly, as it is very apt to leak and almost impossible to caulk, owing to its position.

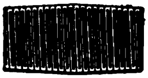

FIG. 75

Figure 75 is known as the close shoulder nipple, and in general it can be used wherever the parallel nipple is employed. The use of the close shoulder nipple instead of the parallel nipple insures a safer and more reliable job, as it is free from the defects of the parallel nipple, and it is much stronger because so much of the metal is not cut away in its manufacture.

XV

SIZES OF PIPE

It is strange what a number of good mechanics are to be found who are totally in the dark regarding a subject so closely allied to their own line of work as the sizes of wrought-iron or steel pipe, and the relative thickness of ordinary pipe, extra strong and double extra strong. This fact is illustrated by the following incident. A note was sent to the man in charge of certain work, asking if there was a sufficient supply of double extra strong pipe on hand. The answer came back that there was plenty of all the sizes that were to be used. When the time came to put things together it turned out that there was plenty of common pipe, but nothing heavier than extra strong, and not enough of that. Men often wonder whether the size of a pipe is measured on the inside or the outside, while the fact is that it is neither the one nor the other. The size given means nothing as an exact measurement, and is, in fact, not much more than a name by which it may be known. A $1\frac{1}{2}$-inch ordinary pipe measures about $1\frac{5}{8}$ inches diameter and $1\frac{9}{10}$ inches outside, and is often mistakenly called 2-inch pipe by those who are entirely unfamiliar with such matters. A 2-inch pipe is $2\frac{1}{16}$ inches inside and $2\frac{3}{8}$ inches outside, while a 3½-inch pipe is exactly 4 inches outside. Every good mechanic should inform himself upon such a subject as this, whether it relates to his own branch of work or not. The possession of such knowledge may prove of value to him, and it costs nothing to keep. Tables giving all the particulars regarding pipe sizes are given in many pocket-books and in numerous trade catalogs. An inspection of such a table will show that the nominal diameter of pipe is an approximation to the actual internal diameter, and that the thickness of extra strong is about one and one-half times that of ordinary pipe, while the thickness of double extra strong is about twice that of extra strong. These expressions are often abbreviated to E. S. and D. E. S., or they are sometimes written X and XX. The outside diameter is always the same, no matter what the weight of the pipe may be; the inside becoming smaller as the thickness is increased. This of course is essential in order that the same taps and dies may be used for all pipe of a given size regardless of the weight. The internal area of double extra strong is, for some of the sizes, not much more than one-half that of ordinary pipe, and this is a fact which must not be lost sight of when considering their relative discharging capacities. For sizes below 1½ inches, the area is much less than one-half.

The larger sizes of pipe, from 14-inch up to 30-inch, are made of even dimensions outside diameter, and are known as O. D. pipe in distinction to those above described, which are sometimes called I. D., or inside diameter pipe, although, as previously observed, they are none of them made to exact inches or binary fractions of inches. The O. D. pipe can be had in any thickness from ¼ inch up to ¾ inch, varying by $\frac{1}{16}$ inch, while the I. D. can only be found in the peculiar thicknesses given in the tables for standard, extra strong and double extra strong, unless made to order in large quantities and at special prices. There is also light-weight pipe made to exact outside diameter for low-pressure service, in sizes from 3 inches upwards. This light pipe is usually rolled or peened into the flanges, or is riveted to them.

XVI

HOW TO DISTINGUISH STEEL FROM IRON PIPE

FEW users of pipe are able to determine, from its appearance, whether it be iron or steel — in fact, many times when customers have thought they were using iron pipe and, in consequence, declined to accept steel, we have proved to them by tests that they were being deceived. In view of this condition, and the further fact that the bulk of the pipe manufactured to-day is steel, and that it is no longer an experiment, but has come to stay, a brief explanation of how it may be distinguished from iron pipe undoubtedly will be interesting to many of our readers.

In the first place, iron pipe is rough in appearance and the scale on it is heavy, whereas on steel the scale is very light and has the appearance of small blisters or bubbles, underneath which the surface is smooth and somewhat white. When flattened, steel pipe seldom breaks; but if a fracture does occur, it will be noticed that the grain is very fine. Iron pipe, when subjected to this test, breaks readily and shows a coarse fracture, due to the long fiber of this material.

The impression often prevails that steel pipe is exceedingly hard, for which reason they imagine that it is threaded with difficulty and that the threads are easily broken off. This belief is entirely erroneous, the truth being that steel pipe is soft and tough. Threads on this pipe do not break; they tear off, to avoid which it is necessary that the cutting die shall be sharp and thus cut above the center. Dies suitable for steel pipe can also be used on iron pipe; but blunt dies that will work successfully on iron pipe will tear the threads on steel pipe, owing to the softness of the metal.

XVII

A COLOR SCHEME FOR PIPE LINES

THE multiplicity of pipe lines in the modern power plant is confusing, to say the least. Some simple method of easy and certain identification, universally adopted, would be a welcome step in advance. Not only would it facilitate the regular work of the attendants in charge, but it would reduce the probability of mistakes in handling valves, and in times of emergency might prevent serious accidents. Furthermore, when a change of engineers is made, the new man would grasp the situation more quickly, and there need be no interruption of the service, nor even a drop in the efficiency. Such a system would also be of decided advantage to inspectors when making their regular visits — whether for the municipal, insurance, or other authorities.

Some attempts in this direction have been made by attaching labels or tags to valves. The United States Government requires all pipe lines in distilleries to be painted in colors, in accordance with an established system. Something has been done also in power plants in this direction, but so far as the writer knows, no complete scheme has as yet been worked out, or proposed, for general adoption.

The writer was confronted with this problem recently when designing the power and service plant of the new Hamburger department store, at Los Angeles, Cal., of some 1600 horse-power capacity. Here there were not only the usual steam, exhaust and feed lines, but a sprinkler system, iced-water distribution, air lines — both compressed and vacuum — ammonia and brine lines for refrigeration and oil, both as boiler fuel and for lubrication. The solution finally worked out was as follows, previous color schemes being adopted as far as possible:

Steam

High- and medium-pressure	White
Low-pressure heating lines	Aluminum bronze
Exhaust lines	Gray

Hot Water

Returns from heating system	Aluminum bronze
House supply	Maroon
Boiler feed	Bright red
Pure drains from high-pressure and exhaust-head drips	Pink
Impure drips, overflows and boiler blow-offs, to blow-off tank	Black

Cold Water

From city mains or deep-well and general house distribution	Light blue
Sprinkler lines including tank, excess-pressure and draining systems	Blue

Iced Water

Drinking-water lines	Dark or navy blue

Air

Vacuum-heating and house-cleaning lines	Light green
Compressed	Dark green

REFRIGERATING

Ammonia, Gas	Yellow
Ammonia, Liquid	Bronze
Brine	Orange

OIL

Lubricating system	Light brown
Boiler supply	Dark brown

These colors are to be applied to the pipe lines after completion and test. They will be applied directly to the pipes themselves where they are left bare, and on top of the finished covering for all others.

The pneumatic-tube cash system, being of polished brass pipe, was not thought to need special coloring.

Pipe lines for hydraulic elevators, when installed, might be violet. Still further differentiation, if desired, could be secured by painting the valves and fittings a different color from the pipe itself.

Gas pipes, where exposed, might be left black, as there would be no danger of confusing them with impure drains.

Care must of course be taken to secure colors that will not fade under heat.

The above plan is believed to be consistent and reasonably complete, and is recommended for general adoption. — WILLIAM H. BRYAN, in *Steam.*

XVIII

EFFECT OF SUPERHEATED STEAM ON CAST-IRON VALVES AND FITTINGS *

The effect of superheated steam of high temperature upon cast-iron valves and fittings is a question that has not been clearly and satisfactorily demonstrated. Nothing definite can be found in the literature on the subject, beyond a few statements which are unaccompanied by any convincing proof.

That high heat materially changes the physical properties of cast iron has been well known for a great many years, such as in the case of gas-retorts, grate-bars, etc., but these are instances where the temperature is much higher than in the case of superheated steam; and whether superheated steam would have a detrimental effect on cast iron at its comparatively low temperature has not been clearly demonstrated. A careful search of all available literature has not been productive of much information.

An Important Point

As cast iron has been, and is now, more generally used in the manufacture of valves and fittings than any other material, it is imperative to know whether

---

* From Valve World.

it may be counted on to retain its strength if used in superheated steam lines. It is also exceedingly important, in view of the fact that there is so much of this material now in use in superheated steam work, to know if these goods are likely to give out in a comparatively short time. It is surely a very important question, and one which should be noticed before serious trouble is experienced.

Information on this subject does not appear to be entirely convincing, because it has not been followed up with convincing proof. That is to say, while some observers appear to have discovered that cast iron, after being subjected to high temperature due to superheated steam, for some time, was comparatively weak, there is no evidence showing that they knew the strength of this particular iron before it was subjected to the superheated steam, which is quite a defect in the evidence, from the fact that all users of cast iron know that there is an enormous variation in its strength.

EVIDENCE NOT CONCLUSIVE

So we claim that we are justified in taking the position that the evidence above referred to is not at all conclusive.

Crane Company has been very anxious to obtain something definite on this important subject, and the opportunity for investigation presented itself a few months ago, when a 14-inch high-pressure gate-valve, which had been in service for four years, was taken out and replaced by a steel valve of similar design.

The company, having a complete record of the tests of the iron which was used at the time this valve was made, was in a position to determine accurately what the effect of long-continued superheated steam really was. The salient points are:

A loss of strength in the body of 49 per cent., while the metal in the flanges, not being under quite so high a heat, and not directly exposed to the action of the steam, showed a loss of only 33⅓ per cent.

Following is the detailed result:

Test on 14-inch No. 9 E cast-iron gate-valve, extra heavy, removed from a superheated steam line.

Steam on line, about August, 1903.

Valve taken out, September, 1907.

Time in service, 4 years.

Pressure of steam, 200 lbs. per sq. inch.

Temperature of steam, about 590 degrees, sometimes a little higher.

Original strength of cast iron, as shown by test bars, 22,400 lbs. T. S.

Strength of bars cut from body of valve, 12,303 lbs. T. S., 11,608 lbs. T. S., 10,610 lbs. T. S., 12,440 lbs. T. S.; average strength, 11,740 lbs. T. S.

LOSS OF STRENGTH SHOWN

Loss of strength in body after four years' service as compared with original test bars 49 per cent.

Strength of bars cut from the flanges on the valve, 14,900 lbs. T. S., 15,250 lbs. T. S.; average, 15,075 lbs. T. S.

Loss of strength, 33⅓ per cent.

It will be noted that in order to avoid mistakes we made several tests as it will be seen that while the metal in the body shows a loss of 49 per cent. as compared with the original test bars, the actual loss is somewhat less than this, for the reason that the body metal was thicker than the bars, and the cooling strains in a large casting tend to lower the tensile strength of the metal about 10 per cent.

Crane Company has made determinations along this line, and finds, with test bars 1 inch square, showing a tensile strength of 22,000 lbs., it is safe to assume that bars cut from a heavy casting will show about 20,000 lbs. However, taking this low figure, the loss in the body was $41\frac{3}{10}$ per cent., which is sufficiently serious to condemn cast iron for valves and fittings on superheated steam lines having a total temperature of 590 degrees.

The information given here we feel is entirely reliable. We cannot conceive where there can be any error, and if it be true, we cannot see any other outcome in this matter than that a lot of plants that are fitted with cast-iron work throughout the country are liable to get into serious trouble, and it appears to us that all engineers in charge of this kind of work owe it to the companies they are employed by, to look into this matter without delay, and see if our experience is confirmed, which they can do by simply taking out a fitting to see what its strength is.

Of course they may have no data to determine what the loss has been, because the manufacturer probably hasn't any record of what the material was that entered into it; yet at the same time they can get some idea as to whether the material has deteriorated.

First. The valve was originally 22½ inches long, but when taken out it measured $22\frac{13}{16}$ inches, showing a permanent elongation of $\frac{5}{16}$ inch. The fact that iron, subjected to high heat for long periods, will take a permanent expansion set is well known, but it was news to us and probably to nearly all engineers that this took place at a temperature as low as 600 degrees.

NOTE. — *Numerous tables of Sizes and Weights of pipe are published by manufacturers; and the Tables of Dimensions and Weights of Pipe and Fittings republished from Power by the Hill Publishing Company will be a valuable book of reference to be used with this volume.*

INDEX

ate Loaned

Siri

Duo mt