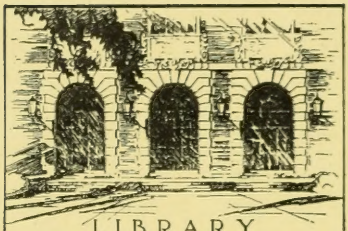

Shade Trees

J. E. DAVIS

Circular 36

ILLINOIS NATURAL HISTORY SURVEY

In Cooperation With University of Illinois · College of Agriculture · Agricultural Experiment Station and Extension Service in Agriculture and Home Economics

STATE OF ILLINOIS
Dwight H. Green, Governor

DEPARTMENT OF REGISTRATION AND EDUCATION
Frank G. Thompson, Director

Planting and Care of Shade Trees

J. E. DAVIS

Printed by Authority of the State of Illinois

NATURAL HISTORY SURVEY DIVISION
Harlow B. Mills, Chief

Circular 36
(Third Printing, With Additions)

Urbana September 1947

This paper is a contribution from the Section of Forestry.
(38037—10M—6-47)

Contents

Cover from an oil painting showing a shady road near Galena, Illinois, by J. William Kennedy, Assistant Professor of Art, the University of Illinois; drawings for figures 4 and 16 by Carl O. Mohr; drawings for figures 12, 13, and 14 by James W. Curfman; photographs for figures 9 and 19 by George W. Bennett.

Cooling shade and protection from wind contribute to health and comfortable living. The early Illinois settlers realized these things when they planted sturdy, leafy protectors on the treeless prairie. We now have an obligation to pass on to the generations after us an even greater heritage in trees.

Planting and Care of Shade Trees

J. E. DAVIS*

EARLY settlers in building the farmsteads, the villages, and later the cities, of Illinois knew full well the comfort to be derived from shade trees. Many of the shade trees around Illinois farmsteads are older than the buildings for which they provide shade; native trees standing near sites selected for homes were spared the settler's axe, and, on the open prairie, trees were often planted even before permanent homes were built. Sometimes years in advance of home building, village streets were laid out with rows of trees, fig. 1.

Many of the early plantings of shade trees are from 75 to 100 years old. Because of the comparatively short life of some species of trees used and because of hard conditions under which shade trees often grow, we are now in a period in which the shade trees planted or left standing by early Illinois settlers are rapidly deteriorating and are dying in large numbers.

There is always an interest in the planting of new trees in new places, but we must not fail to recognize the heritage in trees left us by the early settlers. We have a definite obligation to care for the old trees to make them last as long as we can, to replant where old trees have died, or start replacements where the old trees are sure to die, and to set out new trees as cities progress and as new farmsteads are built.

Shade trees are required to grow under conditions far different from their natural environment. In its natural forest condition the tree develops a long, narrow trunk and a small crown. On the ground beneath its crown is a heavy layer of leaf litter and humus that holds moisture and helps keep the soil in good condition. The tree that is planted for shade develops a large spreading crown that demands huge quantities of water; yet much of the water that should naturally be available to the tree may be carried away by surface sewers and drainage tile, and the ground above the roots often covered with sod that competes with the tree for water. Often, too, nearly half the root system of a tree must grow under pavements where no water can be received directly from rainfall. Also, the shade tree is usually

*Formerly Extension Forester, Illinois Natural History Survey and University of Illinois College of Agriculture, cooperating.

more exposed to mechanical injury and the attacks of diseases and insects than the forest tree.

Trees have a wonderful ability to adapt themselves to a wide variety of conditions. In spite of the difficulties to be met in dooryards and along city streets, trees can and do serve many decades for beauty and comfort, if they are given just a little help by man.

PLANNING FOR SHADE

Kinds of Trees to Use.—It is most important that careful thought be given to the kinds of trees to use so that the right tree may be selected for any particular purpose or situation. Too often failure to use the right kind of tree has caused keen disappointment when it is too late to make a change.

The desire to get shade in the shortest possible time is one of the most common causes of disappointment to shade tree

Fig. 1.—Shady, well-planted streets make for summer comfort and contribute to enjoyable living in cities and villages.

planters. Unfortunately, the most rapidly growing trees are not the most desirable shade trees. Rapid growth means weak wood, which is subject to serious storm damage and is more readily

Fig. 2.—Wide spacing gives trees an opportunity for full development of the natural beauty of the crown. These American elms are planted 75 feet apart.

attacked by diseases and insects than is wood of the trees that grow less rapidly.

It will save trouble in the future to consider, before trees are planted, the space available for the trees and the possible effect of these trees on surrounding physical structures, both above and below ground. Crowding a large-growing type of tree into a small space may result in serious damage to buildings or to basement walls. The poplars, or cottonwoods, are not satisfactory for city planting, and in some cities their use is prohibited by law because of the tendency of their roots to clog drainage tile and sewers.

In selecting a shade tree it is wise first to observe the trees that are doing best in the neighborhood and then to decide on those that are best adapted to a particular situation. General information about the most common shade trees adapted to Illinois is given in the latter part of this circular.

Spacing.—The spacing of shade trees will be determined somewhat by the size to be reached by the mature tree, figs. 2 and 3. Distances of 50 to 60 feet between trees are usually used, and large-growing trees should not be planted nearer to houses than 30 feet. Where trees are to be planted in the parking along a street, these rules cannot always be followed.

Sources of Planting Stock.—Small shade trees may be purchased from commercial nurseries, or dug as wild saplings in the field or woodland.* A nursery-grown tree can usually be transplanted more successfully than a wild sapling because root pruning in the nursery has developed a heavy root system close to

Fig. 3.—Close planting prevents the natural development of crowns as trees approach maturity. These young Moline elms that border a driveway are planted too close—approximately 15 feet apart.

the trunk of the tree, most of which is retained when the tree is moved. Wild trees have wide-spreading roots, many of which are bound to be lost when the trees are moved. The use of wild trees found growing in dense shade should be avoided since such trees have tender bark easily injured by strong sunlight.

In Illinois planting stock grown in this state, or in states in the same or a more northern latitude, should be used in preference to stock grown in states south of Illinois. Southern-grown planting stock, if grown from the seed obtained from southern trees, may be subject to winter damage, especially in northern Illinois.

Size of Planting Stock.—It is best for the amateur tree planter to use trees no larger than 8 to 12 feet tall and 1½ to 2½ inches in diameter at 1 foot from the ground. Larger trees

*Trees should not be removed from any public right of way nor from state or federal parks and preserves nor from private property without permission of the owner. Statutes provide severe penalties for such trespass.

can be transplanted successfully, but special equipment and skill are required. Where large trees are to be moved, the services of a professional tree mover should be obtained. Such men can usually be located through classified directories or city chambers of commerce.

Quality of Planting Stock.—Much can be done toward assuring the success of shade tree planting by selecting good quality planting stock, fig. 5. The tree should have an abundance of roots and a straight trunk free from scars and bruises. The crown should have a straight leader and three or four well-spaced side branches.

In Illinois it is required by law that, before being moved, trees be inspected by state authorities and certified as being free of diseases and insect pests. An inspection certificate on nursery stock assures the buyer of healthy trees. The law applies also to wild stock. Inspection is free and can be had by application to the Chief Plant Inspector, State Department of Agriculture, Springfield, Illinois.

Trees transplanted with a ball of earth on the roots have a much better chance of survival than those transplanted with bare roots. The ball of earth is usually wrapped in burlap. Such trees are designated as "B and B" or "balled and burlapped." Even wild trees should be balled and burlapped for transplanting. This is true especially of pin oak. If possible, the trees in the field or woodland should be selected a year in advance of being moved and then root pruned. This latter operation is done by digging a trench 3 feet deep about 18 inches to 2 feet from the tree, cutting all roots and replacing the soil. The next year a trench can be dug, preferably 6 to 8 inches outside the original trench, and the tree moved with a compact root system in a ball of earth.

PLANTING SHADE TREES*

When to Plant.—Shade trees may be planted at any time during the dormant period, that time between the shedding of the leaves in the fall and the opening of buds in the spring; but spring is preferred over fall. In the spring, planting should be delayed until the soil is in good, workable condition. Wet, soggy soil when packed around a newly planted tree may dry into a

*These suggestions are made principally with deciduous trees in mind, since they, more than evergreens, are considered shade producing. However, most of these directions apply also to the planting of evergreen trees.

hard block through which it is almost impossible for roots to grow.

How to Plant.—All trees should be handled with the shortest possible elapsed time between digging and planting. Bare-root trees should be heeled in while waiting to be planted. To heel in trees, dig a trench in the garden or other suitable location, place the trees upright or slanting with the roots in the trench, and work soil firmly around the roots, the purpose being to prevent the roots from drying out. Never transport or leave trees with the roots exposed to the air.

Preparing the hole is one of the most important steps in tree planting. For a bare-root tree, the hole should be large enough to allow the roots to be spread as they were when the tree was dug up; for balled trees, the hole should be large enough to allow space for filling in with plenty of good soil. The hole should be deep enough to set the tree at the depth at which it grew before being moved—never any shallower and never more than 2 inches deeper. If the soil is of poor quality, then enough good soil should be on hand to fill in the hole when the tree is being planted.

Actual planting is simple, and good success can be had by following a few precautions. Be sure that the roots are well spread in a natural position, that the tree is at the proper depth, and that it stands upright. Work the soil thoroughly and firmly around the roots and pack it down with a tamper. Set a balled and burlapped tree in the hole with the burlap left on the ball of dirt. After the hole is partly filled, cut the strings and loosen the burlap around the top of the ball. New roots will grow through this burlap, and the burlap will rot away in a short time. Do not put any fresh manure, straw, or leaves into the hole when planting a tree. When the soil is of poor quality, use well-rotted compost, peat moss, or commercial fertilizer to help supply plant food for the tree. Mix about 25 to 50 per cent of compost or peat moss, or about 5 pounds of a commercial fertilizer having a high nitrogen content, with the soil that is to be placed in the hole with each tree.

Leave a slight depression around the tree to allow for watering. Water the tree immediately after planting it to settle the soil firmly around the roots. Take care, however, to use only as much water as the soil will readily absorb and not enough to form a puddle, which might cause the soil around the roots to dry into a hard block.

CARE OF NEWLY PLANTED TREES

Pruning.—The leaves of trees give off water by transpiration and, since this water is furnished by the roots, a natural balance is ordinarily maintained between root and top. When a tree is transplanted, some of the roots are lost and the top demands more water than can be furnished to it by the remaining roots; weakening of the tree, or even death, will result unless the top of the tree is pruned to reduce water requirements. This pruning can also serve to improve the form of the tree. The crown of the tree should be thinned out, leaving a good leader and side branches with uncut tips, fig. 4.

Fig. 4.—*A*, a newly set tree improperly pruned. The leader has been removed and stubs have been left. *B*, a tree of identical shape properly pruned. About 50 per cent of the branches have been removed, but good form has been retained and no stubs have been left.

Wrapping and Bracing.—Newly planted trees will be weakened by the loss of roots and will become liable to injury by borers, which are common in Illinois. Protection of the trunk by wrapping is important for at least the first and second years.

Fig. 5.—Trees of good quality in temporary nursery rows. The trunks of these trees are well wrapped for protection against borers.

until the tree overcomes the shock of being transplanted and regains its vigor, figs. 5, 6, and 7. One of the several tree wrappers on the market, burlap sacking, or ordinary kraft wrapping paper may be used.

Kraft wrapping paper such as is used in hardware and department stores is one of the most satisfactory tree wrappers and at the same time is inexpensive and easy to use. The paper should be of at least 40-pound weight, since lighter paper tears too easily, and it should be at least 24 inches in width. To wrap a tree with this paper, cut a length of paper equal to the length of trunk to be covered. Then start by holding one long edge of the paper vertically against the tree and wrap the paper around the tree, fig. 6, left. The 24-inch width will go around a 2-inch tree three to four times. Tie the paper on with binder twine, fastening it at the top with a slipknot, and then carry the twine down the tree, making a half hitch about every 6 inches, fig. 6, center and right.

Another inexpensive wrapper, but more troublesome to prepare and apply, may be made from burlap sacks. Cut sacks into long strips 6 to 8 inches wide, starting at the top of the sack and cutting around it spirally. Use at least two layers of this material on the tree, wrapping each layer like a spiral bandage. Tie the ends securely so that the spiral layers will not loosen and separate.

Before the tree has developed new roots to hold it in the soil, it may be blown to a leaning position by the wind unless staked, or braced with guy wires, fig. 7. The guy wires, where they pass around the tree, should be run through a piece of rubber hose to prevent injury to the bark, or pieces of old inner tube may be wrapped around the wires where they contact the tree. The Illinois Division of Highways has found stakes more satisfactory than guy wires because grass around the trees can be more easily cut when the stakes are used. Two stakes are driven into the ground, about 3 feet apart, on opposite sides of the tree. The tree is secured to the stakes by wires, which are

Fig. 6.—Left, wrapping a newly planted tree for borer protection with common wrapping paper. Center, method of tying wrapping paper securely, usually with binder twine. Right, close view, showing half hitches.

covered with a piece of rubber hose or inner tube where they contact the tree itself.

Other Protection.—In the northern part of Illinois, where snow may pile up around the tree, precaution may be taken to prevent mouse and rabbit injury by putting a fine woven-wire

Fig. 7.—Guy wires wound tightly around a tree will cut off circulation and kill the tree. The wires should be incased in rubber and encircle the tree in a single loop. Illustrated also is a poorly applied spiral tree wrapper that has slipped, exposing the bark to borer attacks.

or screen guard around the lower part of the trunk, extending the guard upward to a point several inches above the probable snow line. This protection will no longer be necessary after the bark grows heavy enough to become rough surfaced. Trees planted to provide shade for barn lots and pastures, and to soften lines and enframe farm buildings, must of course be fenced to protect them from livestock.

Watering.—The newly planted tree will need an abundance of water and, during dry periods of spring and summer, should be watered frequently. Watering should be discontinued about September 1 to check the development of new growth and to give the tree a chance to harden off before freezing weather sets in. Trees watered throughout the fall are very susceptible to frost damage. In dry periods a heavy mulch of straw, peat moss, or ground corncobs may be used to help hold moisture. Because such mulch may harbor mice, it should not be left close to the trunk of the tree during the winter.

CARE OF OLDER TREES

Pruning.—After trees have become established, it may be necessary to prune them to improve their form or to remove dead, injured, or diseased branches. Trees should be checked over every 2 or 3 years, for delay in removing diseased or damaged branches may allow decay to enter the trunk or large limbs where the tree can be helped only by resorting to costly tree surgery.

In pruning to improve the shape of a tree, give attention to forming a symmetrical crown and avoid leaving narrow crotches which might split easily. An ordinary hand saw may be used satisfactorily, but the special pruning saw with curved blade is easier to work with. Do not attempt to remove large limbs, those over about 2 inches, with one cut, or they will invariably split down from the base, causing an ugly wound which cannot heal properly. As indicated in fig. 8, first make an undercut, *a*, about 1½ feet out from the main stem; then make an overcut 2 to 3 inches farther out, *b*, carrying it through until the limb breaks off by its own weight. Complete the job by sawing the stub off flush with the bark of the trunk or parent limb, *c*, taking care to make a clean cut and to avoid tearing the bark down from the bottom of the cut.

Fig. 8.—Correct method of cutting away a limb of 2 inches or more in diameter. Cuts should be made in order at *a*, *b* and *c*.

Mature trees are harmed least if pruned during the dormant period, preferably from the first of January through March. Maples should be pruned in early January to prevent excessive bleeding. All wounds caused by pruning should be painted with asphaltum, or one of the several good home-mixed or commercial tree paints available, to prevent the entrance of insects and wood-rotting fungi.* The asphaltum must be thin to make a coating that will adhere well; 10 per cent creosote by

*Before applying paint, most tree experts sterilize large wounds with a solution consisting of 1 part mercuric chloride, **deadly poison**, dissolved in 500 parts water and 500 parts alcohol. The solution should not be placed in metal containers; it should be carefully labeled and kept away from children and animals, and from adults not aware of its poisonous nature.

volume should be added for an insecticide and fungicide. A good fungicidal paint can be made by mixing equal weights of raw linseed oil and Bordeaux powder. This mixture is poisonous and should be used only out of the reach of children and animals.

The most detrimental practice of tree pruning common throughout Illinois is the topping of large trees, fig. 9. This

Fig. 9.—Soft maple trees ruined by topping. The beauty of these trees has been destroyed, and they are a serious menace because of the ease with which the new growth can be broken off by ice and wind. Shade trees may be shaped by correct pruning practices without damaging them and without producing such unsightly examples as are shown here.

practice has very little in its favor. It produces unsightly trees, or kills the trees outright. In many species, topping produces thick crowns of slender, weak branches. Decay, in the wounds that do not heal over, weakens the trees and makes them a menace to life and property. Where the practice of tree topping started, and why, does not seem to have any reasonable explanation. Yet there are tree trimmers and self-styled tree surgeons who recommend this practice in spite of the unsightly examples of tree-butchery which can be seen almost anywhere in the prairie region.

The leaves are the food-manufacturing plants for the tree.

Topping the tree removes the source of new food, and the tree must then try to build new branches on what little food is stored in the wood. Not many species of trees can replace

Fig. 10.—Thinning the crown by proper pruning insures sound, well-formed trees. The wounds shown here are healing properly because cuts were made flush with the bark and a tree paint was used to prevent decay.

the old branches, and the result is often fatal. Rather than top a tree, first see to it that dead, damaged, and diseased wood is removed. Then, if the crown is too dense to suit, thin it out by removing entire branches throughout the crown, fig. 10. If

Fig. 11.—In the illustration at the left, careful pruning has allowed power wires to pass through the crown of the elm without harming the form and beauty of the tree. In the tree at the right, the power wires have been cleverly passed beneath the upper crown of the tree so that from the highway the pruning that has been done is not noticeable.

it grows too tall, bring it down by removing those branches which extend the farthest above the ground. Never remove a large proportion of the crown in any one year. It is far better to do a little careful pruning each year for several successive years, and, in the case of newly established plantings, pruning should be started as soon as needed after planting. Well-planned pruning while the tree is young will avoid the necessity of removing large limbs, the scars of which are difficult to heal over, and will encourage the growth of well formed, healthy crowns.

Trees that interfere with power lines and telephone lines can be pruned in such a way as not to spoil the form of the tree. Interfering limbs may be cut back to the main stem so that wires can pass through a limited opening in the crown; there is no necessity of cutting off the entire top or even one side of the tree, fig. 11.

Care of Bleeding Wounds.*—Bleeding of wounds, especially in elms, is usually caused by a bacterial disease of the wood called wetwood. Accumulation of gas and sap in the diseased

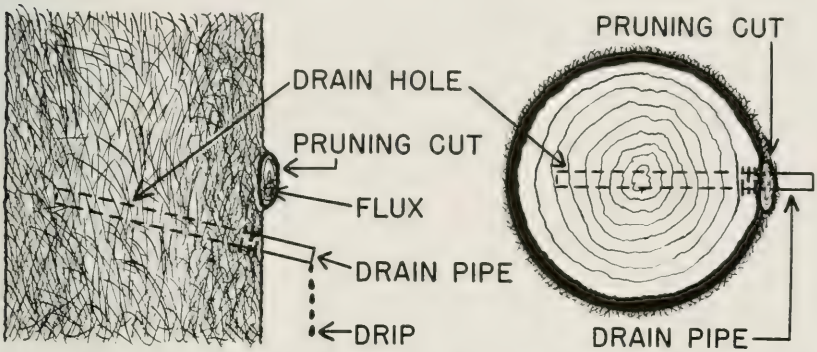

Fig. 12.—Bleeding or fluxing at pruning wounds may be stopped by tapping the trunk 6 to 14 inches directly below the fluxing region. The threaded drain pipe should be screwed into the wood only far enough to be firm. It should not penetrate the water-soaked wood.

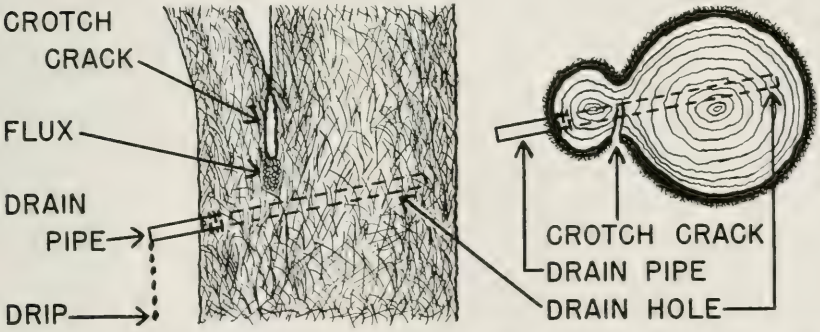

Fig. 13.—Fluxing at cracks in branch crotches frequently can be stopped by tapping the trunk so that the drain hole will cross the crack in the wood. Usually drainage is most effective when the hole is bored to one side and about 6 to 14 inches below the crack.

wood creates abnormally high pressures that force the sap out through wounds. This exudation of sap is commonly called fluxing. Fluxing sap is sufficiently toxic to retard or prevent callus formations. It may kill the bark at the base of pruning cuts and around trunk and crotch cracks. Frequently, the fluxing of wounds can be stopped by tapping the trunk to remove the gas

*This section on "Care of Bleeding Wounds" is by Dr. J. Cedric Carter, Plant Pathologist, Illinois Natural History Survey.

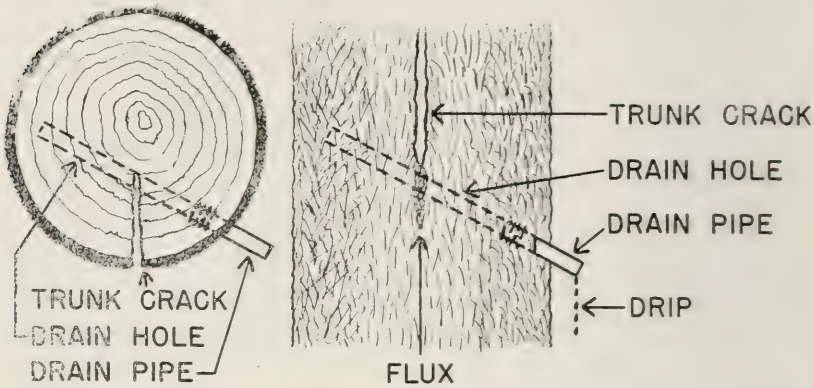

Fig. 14.—Fluxing at cracks in trunks should be treated the same as cracks in branch crotches. The drain hole should be bored so that it will cross the crack in the wood. It should be about 6 to 14 inches below and to one side of the trunk crack.

and toxic sap that have accumulated in the diseased wood, figs. 12, 13, 14, 15.

There is no hard and fast rule for determining where a fluxing tree should be tapped. In some cases, tapping the trunk of a large elm at its base has stopped the fluxing of several wounds along the trunk. More effective drainage of the accumulated gas and sap from the diseased wood is usually obtained by tapping the tree a short distance below the fluxing region. Fluxing wounds, where branches have been removed, can usually be drained by boring a hole three-eighths to one-half inch in diameter, 6 to 14 inches directly below the fluxing region, fig. 12. Fluxing cracks in trunks and in branch crotches may or may not respond to the same treatment. In some cases, several holes may have to be bored before satisfactory drainage is obtained. The crack in the wood may not be directly behind the fluxing area in the bark. It may be so located that a hole bored directly beneath the bark crack will miss the wood crack, and proper drainage will not result. As a rule it is best to bore the hole to one side and about 6 to 14 inches below the fluxing crack, figs. 13 and 14. This hole should be directed toward the probable location of the crack in the wood or toward the center of the heartwood. Drain holes should have sufficient slant to allow the wetwood sap to flow out, and they should extend through the heartwood to within a few inches of the bark on the opposite side of the trunk.

A short piece of threaded pipe should be screwed into the drain hole to carry the dripping sap away from the trunk and buttress roots. The pipe should be inserted in the hole only far

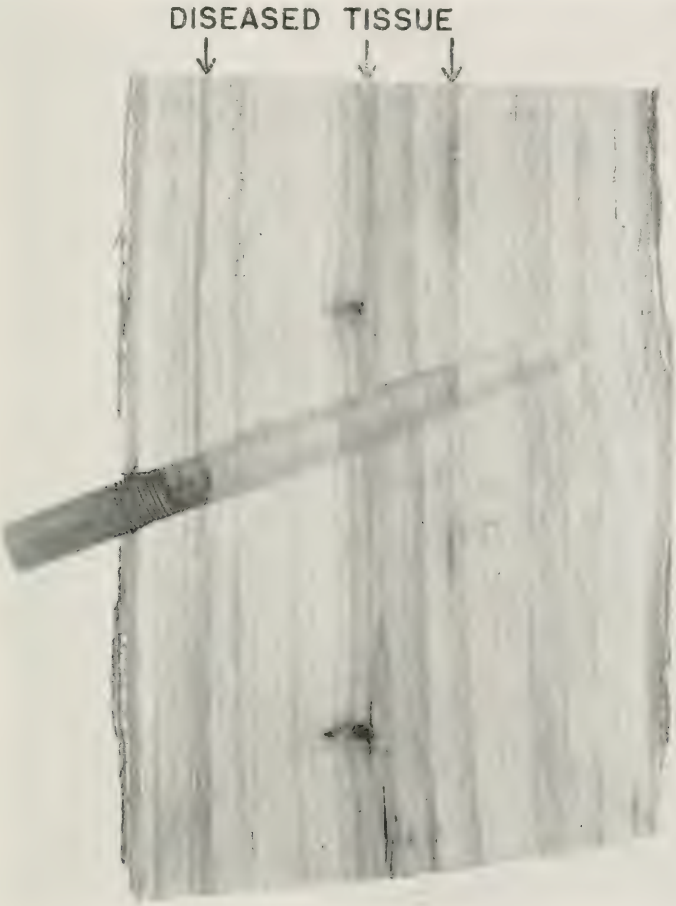

Fig. 15.—Section of tree trunk showing hole bored at proper angle to insure drainage and drain pipe so inserted that it does not penetrate diseased wood and interfere with drainage.

enough to be firm; it should not penetrate the water-soaked wood, fig. 15. If the pipe penetrates this wood, proper drainage will not result. Drain pipes should be examined occasionally and any accumulated slime found clogging the pipes should be removed with a piece of wire.

Tree Feeding.*—To maintain the health and to promote vigorous growth of shade trees, it often becomes necessary to provide food materials that are lacking, or are present in the soil in insufficient amounts. In the forest, where humus accumulates year after year, trees are liberally supplied with organic

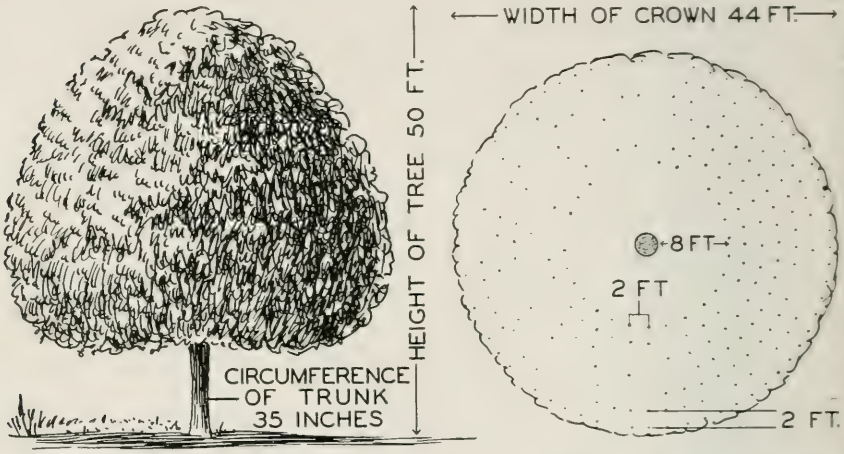

Fig. 16.—Diagram for estimating the number of pounds of 10-8-6 fertilizer required for a shade tree: circumference of trunk in inches (35) + height of tree in feet (50) + width of crown in feet (44) = 129. At the right is shown the pattern for spacing holes in which to supply fertilizer in soil beneath the tree. The distance from the trunk at which the circles should begin may vary between 6 and 8 feet for large trees. For small trees, the circles should begin closer to the trunk. The distance between circles and between holes in the circles may vary between 2 and 2½ feet.

food material derived from decaying leaves and plants, which also serve to retain an abundance of soil water. Since natural sources of food cannot be maintained along city streets, in lawns, or in parks, artificial feeding may be desirable.

Three chemical elements, nitrogen, phosphorus, and potassium, must be available in the soil to insure the best development of a tree. A complete shade tree food should supply all three elements. Nitrogen can be supplied by inorganic compounds (nitrate of soda, sulfate of ammonium, calcium nitrate) or by organic materials (urea, soybean flour, cottonseed meal, tankage, dried blood, pulverized sheep manure). Phosphorus can be furnished as superphosphate and potassium as muriate of potash. Although an effective tree food can be prepared from

*This section on "Tree Feeding" is from "Shade Tree Feeding," mimeographed publication of the Section of Applied Botany and Plant Pathology, Illinois Natural History Survey.

inorganic materials alone, it is believed that more lasting effects are obtained when one-third to one-half of the nitrogen is supplied by organic materials.

There is no established rule as to the amounts of nitrogen, phosphorus, and potassium a tree food must contain. In fertilizer formulas, nitrogen is expressed as nitrogen (N), phosphorus as phosphoric acid (P_2O_5), and potassium as potash (K_2O). Commonly, tree foods contain nitrogen, phosphoric acid, and potash in proportions of 12-6-4, 10-8-6, 10-6-4, 10-3-3, 8-5-3, 6-7-4, and 6-6-4. Three widely used formulas are 10-8-6, 10-6-4, and 10-3-3. Prepared tree foods can be purchased, ready for use, through many local dealers in fertilizers.

One hundred pounds of 10-8-6 home-mixed tree food containing an inorganic nitrogen source can be prepared with approximately 47.5 pounds of "20.5 per cent available" sulfate of ammonia, 40 pounds of "20 per cent available" superphosphate, and 12.5 pounds of "48 per cent available" muriate of potash. A 10-8-6 mixture containing both organic and inorganic sources of nitrogen can be prepared with 30 pounds of "16 per cent available" nitrate of soda, 14 pounds of "20.5 per cent available" sulfate of ammonia, 2.2 pounds of "46 per cent available" urea, 23.5 pounds of "6 per cent available" tankage, 17.8 pounds of "42 per cent available" double superphosphate, and 12.5 pounds of "48 per cent available" muriate of potash.

A common method of estimating the amount of tree food to be applied is as follows. Add the height of the tree in feet, the branch spread in feet, and the circumference, 1 foot above the soil, in inches, fig. 16. The sum of these three figures represents the number of pounds of tree food required. This method, recommended by A. P. Beilmann of the Missouri Botanical Gardens, has proved very effective for a 10-8-6 mixture.

Another method of determining the amount of tree food needed, as suggested by L. C. Chadwick of the Ohio Agricultural Experiment Station, is based upon the amount of nitrogen required to maintain uniform tree growth. Trees less than 6 inches in diameter should receive one-fourth pound of available nitrogen per inch of trunk diameter, and trees 6 inches and over in diameter should receive one-half pound of available nitrogen per inch of trunk diameter. A tree 4 inches in diameter requires one-fourth pound per inch, or 1 pound, of available nitrogen. To determine the number of pounds of a 10-8-6 formula required to give 1 pound of available nitrogen, divide 1 by 0.10 (10 per

cent available nitrogen). The amount of 10-8-6 fertilizer required is 10 pounds. A tree 12 inches in diameter requires one-half pound per inch, or 6 pounds, of available nitrogen. The amount of 10-8-6 fertilizer required to give 6 pounds of available nitrogen is 6 divided by 0.10 (10 per cent available nitrogen) or 60 pounds.

Fig. 16 shows one way of supplying food to trees. With a punch-bar or auger drive holes, 1½ to 2 inches in diameter, perpendicularly into the soil beneath the tree. The holes should be 18 to 24 inches deep and spaced 2 to 2½ feet apart in concentric circles around the trunk. The outer circles should be somewhat beyond the limit of branch spread and the inner circles should be spaced to maintain about the required distance between holes. Holes may be quite near the trunks of large trees to supply feeding roots in that region. Distribute the tree food evenly in the holes. Then fill the holes with water, and keep them filled for about 3 days, to soak the tree food into the soil and make it quickly available to the feeding roots. The holes may now be filled with sand, peat moss, or loose soil. Or, if left open, they will facilitate water absorption during rains, aerate the soil, promote development of feeding roots, and provide an effective means of supplying water during droughts.

Tree feeding can be done at any time of year but feeding during April, May, or October, when the soil contains ample water, is especially beneficial. Tree foods are most readily available when in water solution; hence, it is highly desirable that sufficient water be present in the soil to dissolve the food. Well-fed trees seem to be more resistant to drought.

Although the preceding paragraphs on tree feeding apply specifically to deciduous trees, many of the directions given apply also to evergreens. For evergreen trees in beds or closely planted in rows, apply soybean or cottonseed meal at the rate of 5 to 6 pounds per 100 square feet of ground. Apply 10-6-4 or 8-5-3 tree food at the rate of 2 to 4 pounds per 100 square feet. The tree food should be worked into the top soil by hoeing or watering.

For specimen evergreens, those standing alone, the amount of fertilizer to be used must be calculated in another way. Pines, spruces, and cedars can be fed the foods recommended for deciduous trees. For shrubby types, apply one-half to one pound per plant twice a year, in early spring and about June 15. For large specimen trees, apply 2 to 2½ pounds of tree food per inch of trunk diameter. Apply in holes beneath the branch

spread. Make 15 holes, 12 to 15 inches deep, for each inch of trunk diameter. Apply the tree food in early spring or in the fall. Feeding holes can be made with a soil auger or punch bar.

Watering.—Watering, often essential where tree foods are used, since the food elements can be taken up by the roots only in solution, is also helpful during drought periods and in situations where much of the rainfall is carried away by drainage.

Where regular watering is to be done for large trees, a definite system should be used that will carry the water down to the feeding roots. Surface watering is of little value except on level ground where a soil dike can be formed under the outer edge of the crown of the tree, permitting flooding of the entire area beneath the crown. One of the best systems, where flooding cannot be used, consists in placing single joints of tile in the ground at regular intervals and watering through these tiles. Four-inch drainage tiles, 12 to 24 inches long, are set upright in the soil, with the tops flush with the surface, and spaced approximately 10 feet apart to form a circle about two-thirds the distance from the trunk to the outer edge of the crown. If the tiles are given all the water that will be readily absorbed from them two or three times a week, trees can be economically watered during dry periods and the water will be distributed down where it can be used by the tree roots.

Grading Around Trees.—Appreciably lowering the grade around shade trees in most cases either kills or seriously damages them. If the grade is to be lowered over 12 inches, it is almost certain that most of the feeding roots will be removed from the tree. When it is possible to leave the normal grade over the space covered by the crown, even though the grade near it is lowered considerably, the tree may be kept in good condition provided a system of watering is followed to compensate for a lowering of the water table.

In many cases shade trees are badly damaged by removal of the roots on one side when streets or driveways are graded, or when excavations for foundations are dug. In such cases trees need help until they can rebuild their root systems. First see that open grades are sodded or riprapped to prevent further loss of soil from the roots by erosion. Then thin out the crown of the tree to reduce water losses by transpiration, and apply fertilizer and an abundance of water for at least two growing seasons.

Raising the grade around a tree can be as harmful as lower-

ing the grade. The feeding roots concentrate in a rather limited zone near the surface of the ground where they can get both moisture and air. Raising the grade as much as 12 to 18 inches will not do much harm, but a deeper layer of fill, especially of heavy soil, will exclude air and kill the feeding roots, unless provision is made to carry air down to these roots.

Before any fill is made, lay down four or five lines of 4-inch porous drainage tile on the surface of the ground radiating from the trunk of the tree, as spokes of a wheel, out to the edge of the crown of the tree. Then spread a layer of about 4 inches of coarse gravel or crushed stone over the area covered by the crown. On top of this spread about 2 inches of fine stone and 4 to 6 inches of straw or manure. Then, with soil, bring the fill to the level desired. Before the fill is made, or as it is being made, build a brick or stone wall around the trunk of the tree, leaving a space of from 1 to 2 feet between the trunk and the wall. A small tree will need more room than a large tree to allow for its ultimate growth.

Through the tile, which projects through the wall, air and water can reach the roots of the tree even with very deep fills. The well formed by the wall and the radiating tile make it easy to supply the tree with water and plant food during dry seasons. To supply plant food, determine by the usual method the amount of fertilizer required and then apply it in solution, which will be carried out to the tree roots through the tile.

Tree Surgery.—Trees that need attention to cavities, installation of drainage in cavities or crotches, or removal of large limbs, can best be cared for by persons trained in tree surgery work and having the proper equipment for such work. Seldom does the amateur have either the experience or equipment to do tree surgery work competently. In some instances minor jobs of this nature can be taken care of by the tree owner, but he should be sure to be properly informed before proceeding. A good text for the layman for ordinary tree repair jobs is the U. S. Department of Agriculture Farmers' Bulletin 1896, *Care of Damaged Shade Trees*. This bulletin may be secured from the Superintendent of Documents, Washington, D. C., for 10 cents a copy.

Diseases and Insects.—Trees that are kept in good health by feeding, watering, and proper pruning are not so susceptible to attacks by diseases and insects as are those that are neglected, but any tree, no matter how vigorous, may possibly be

attacked. The diseases and insects that attack trees are so numerous that it is not possible to give detailed information about them here, and the reader is referred to University of Illinois College of Agriculture Extension Circular 509, *Protecting Shade Trees from Insect Damage.*

The Illinois Natural History Survey, through its sections of Economic Entomology and of Applied Botany and Plant Pathology, is glad at any time to examine specimens to identify insects or diseases and make recommendations for their control. This service is offered without charge and should be used more frequently. Too often persons hesitate to ask advice on control of diseases and insects until the damage has gone beyond repair.

In submitting diseased leaves and twigs for inspection, send adequate samples of fresh specimens, well wrapped so that they will not dry out. Send insects, without crushing them, in mailing tubes or in tin boxes, but not in tightly stoppered bottles nor loosely in envelopes. Be sure to send specimens of the damage being done by the insects and give all information you can about the conditions involved. Mail specimens to the Illinois Natural History Survey, Urbana, Illinois, or to the Extension Forester, 219 Mumford Hall, Urbana, Illinois.

SOME COMMON TREES USED FOR SHADE

American Elm (*Ulmus americana*).—This is the most popular and widely planted shade tree in Illinois, fig. 17. Its vaselike form and dense, dark green foliage make it both pleasing in appearance and a provider of good shade. However, the American elm is susceptible to two serious diseases—the Dutch elm disease and phloem necrosis. Although the Dutch elm disease has not been found in Illinois, it has been present at Indianapolis, Indiana, and in several eastern states for over 15 years.

Phloem necrosis is prevalent in the southern part of Illinois, extending as far north as Peoria. It affects only the American elm and its varieties, including the Moline, vase, and holly leaf elm, and the winged elm (*Ulmus alata*). In view of the present seriousness of this disease, it is advisable to include other species of trees in plantings for shade and ornamental purposes.

Several varieties of American elm have been propagated because of their pleasing shapes. Many of them have narrow or V-shaped crotches. As the trees increase in age and size, such crotches make them subject to storm damage, weakening and death of scaffold branches because of crowding, and invasion

Fig. 17.—The American elm is the most popular of all shade trees in Illinois.

by borers. Elms with broad or U-shaped crotches are less susceptible to these troubles.

Sugar Maple, Hard Maple (*Acer saccharum*).—Not so fast growing as the American elm but a very useful shade tree

Fig. 18.—The sugar maple has a dense crown that affords heavy shade.

throughout the state, the sugar maple has a dense, symmetrical crown that affords heavy shade, fig. 18. The fall leaf colors vary from yellow to rich burnt orange. The hard maple is deep rooted and seems to withstand well the difficult growing conditions in cities.

Norway Maple (*Acer platanoides*).—This is not a native tree and cannot be found in local woodlands, but it is frequently used as a street tree and may be planted throughout Illinois. It has a low-branching, round crown with a very dense foliage. A disadvantage of this tree is that its heavy shade and its feeding roots very close to the surface make difficult the growing of grass underneath it.

The Oaks.—The white oak (*Quercus alba*), the red oak (*Quercus borealis maxima*), and the pin oak (*Quercus palustris*) are of special interest as shade trees because of their dense foliage and rich autumn colors. They are well adapted to the entire state of Illinois. The white oak and the red oak develop large, spreading crowns, and the pin oak develops a conical crown, narrow at the top and wide spreading at the base. The pin oak, fig. 19, is useful where a large upper crown is undesirable, but it is not adapted to a limited ground space, such as the parking between sidewalk and curb. The wood of the oaks is very strong and storm resistant, and not seriously susceptible to diseases, fig. 20.

Fig. 19.—The pin oak develops a shapely, conical crown. This species of oak is not adapted to a limited ground space, however.

Tulip Tree (*Liriodendron tulipifera*).—The tulip tree has a very unique foliage of light green color. It tends to grow tall and upright with a straight clean trunk and symmetrical crown. It is not hardy in the northern end of the state, nor is it adapted to dry sites.

Sycamore, Buttonball, Plane Tree (*Platanus occidentalis*).—The sycamore is delightful as an occasional tree because of the appearance of the bark, which is shed annually, leaving a mottled effect of whitish and gray-green patches. This tree will grow

Fig. 20.—The wood of the oaks is strong and storm resistant. The autumn leaf colors vary from brilliant to deep reds. A bur oak is shown here.

large and tall but will not make dense shade. It can be used throughout the state but is not adapted to dry sites. The sycamore is susceptible to disease and storm damage and should, therefore, not be used extensively. The objection to its use in the yard is that it sheds its leaves over a long period of time.

Hackberry, Sugarberry (*Celtis occidentalis*).—The hackberry is similar to the elm in form but has finer foliage. It can be grown almost anywhere in Illinois and has been widely used as a street tree. It is not so resistant to decay as the elm. One disadvantage of the hackberry is its susceptibility to a disease which forms witches' brooms (dense clusters of short branches) throughout the crown and often makes the tree unsightly. The

fruit of the hackberry is readily eaten by both squirrels and birds.

Basswood, American Linden, Linn (*Tilia glabra*).—The basswood does not make so pleasing a shade tree as the European lindens, but where it can be readily obtained locally it is satisfactory. The leaves are large and heart shaped, and always present a fresh, cool appearance. The wood is weak and easily damaged by storms. The basswood is not adapted to the southern part of Illinois.

Black Walnut (*Juglans nigra*).—The black walnut differs from the trees previously described in that it has long compound leaves which give it a quite different appearance. It makes a tall, upright tree, providing fairly dense foliage, and is adapted for planting throughout the state. The special interest of the walnut lies in its fruit. Every city should have walnut trees scattered throughout its plantings to provide food for squirrels. However, it should not be planted where the walnuts will fall on sidewalks, as the hull when crushed makes an unsightly stain on stone or concrete.

The Ashes.—The white ash (*Fraxinus americana*), the green ash (*Fraxinus pennsylvanica lanceolata*), and the blue ash (*Fraxinus quadrangulata*) are adapted to a wide variety of soils throughout Illinois. The ashes form tall, fairly narrow trees, with light foliage. They are not so useful for shade as the other trees described, but they have a definite place as an occasional tree to add variety.

Sweet Gum, Red Gum (*Liquidambar styraciflua*).—The sweet gum is an excellent shade tree well adapted to the central and southern parts of Illinois. The crown is usually symmetrical and not so wide spreading as that of elm or white oak. The leaves are star shaped and light green in color, turning to brilliant reds in the fall.

Chinese Elm (*Ulmus pumila*).—This is one fast-growing tree that can be used to a limited extent for shade planting, particularly for temporary shade. Its leaves are small and its foliage fairly thin, so that its shade is very light. Its wood is stronger than that of the objectionable trees listed below, but it is still very weak and easily damaged by storms. Apparently there are several strains of the Chinese elm, some of which are better adapted than others to Illinois climate, but as yet no intensive study has been made for the purpose of testing and selecting the better strains. The tree has not been planted in

this state long enough to allow the making of any predictions on its longevity.

Other Useful Trees.—The above brief descriptions include a few of the commonest native trees, which can ordinarily be collected as wild saplings or readily obtained from local nurseries. Of the trees described, only the Norway maple and the Chinese elm are not native. The list represents by no means the limit of varieties that can be successfully used for shade tree planting. Many other native trees are useful for shade. No attempt has been made to list the many highly desirable introduced trees which, of course, cannot be obtained from local fields or woodlands. Before doing any shade tree planting it is advisable to consult nursery catalogs to become acquainted with all types of trees that are suitable for planting in Illinois.

Trees to Avoid.—There is always a demand for trees that will grow rapidly, but, unfortunately, the fast-growing trees are weak wooded and very susceptible to diseases and storm damage. For these reasons, the following trees are objectionable and should generally be avoided in shade tree planting: Silver maple (*Acer saccharinum*), box elder (*Acer negundo*), tree of heaven (*Ailanthus altissima*), the catalpas (*Catalpa* species), the poplars (*Populus* species), and the willows (*Salix* species). The poplars and willows are objectionable also because of their habit of growing into sewers and drainage tile. The white birches, particularly the weeping varieties, cannot be recommended because they are likely to be killed by the bronze birch borer, often at about the age they have reached a useful and attractive size.

Recent Publications

A.—ILLINOIS NATURAL HISTORY SURVEY BULLETIN.

Volume 22, Article 2.—Studies of North American Plecoptera, with special reference to the fauna of Illinois. By T. H. Frison. September, 1942. 122 pp., frontis. + 126 figs., bibliog., index. $1.00.

Volume 22, Article 3.—Management of Small Artificial Lakes: a summary of fisheries investigations, 1938–1942. By George W. Bennett. February, 1943. 20 pp., frontis. + 7 figs., bibliog.

Volume 22, Article 4.—The Prairie Chicken in Illinois. By Ralph E. Yeatter. May, 1943. 40 pp., frontis. + 18 figs., bibliog. (Bound with Article 5.)

Volume 22, Article 5.—Preferential Rating of Duck Food Plants. By Frank C. Bellrose, Jr., and Harry G. Anderson. May, 1943. 16 pp., frontis. + 16 figs., bibliog. (Bound with Article 4.)

Volume 22, Article 6.—Survey of the Illinois Fur Resource. By Louis G. Brown and Lee E. Yeager. September, 1943. 70 pp., frontis. + 33 figs., bibliog. (Bound with Article 7.)

Volume 22, Article 7.—Illinois Furbearer Distribution and Income. By Carl O. Mohr. September, 1943. 33 pp., frontis. + 24 figs., bibliog. (Bound with Article 6.)

Volume 23, Article 1.—The Caddis Flies, or Trichoptera, of Illinois. By Herbert H. Ross. August, 1944. 326 pp., frontis. + 961 figs., bibliog., index. $1.50.

Volume 23, Article 2.—Duck Populations and Kill. By Frank C. Bellrose, Jr. November, 1944. 46 pp., frontis. + 27 figs., bibliog.

Volume 23, Article 3.—Overfishing in a Small Artificial Lake: Onized Lake Near Alton, Illinois. By George W. Bennett. May, 1945. 34 pp., frontis. + 15 figs., bibliog.

Volume 23, Article 4.—Wetwood of Elms. By J. Cedric Carter. August, 1945. 42 pp., frontis. + 30 figs., bibliog.

Volume 23, Article 5.—Fox Squirrels and Gray Squirrels in Illinois. By Louis G. Brown and Lee E. Yeager. September, 1945. 88 pp., frontis. + 42 figs., bibliog.

Volume 24, Article 1.—The Mosquitoes of Illinois. By Herbert H. Ross. August, 1947. 96 pp., frontis. + 184 figs., bibliog., index. 50 cents.

B.—ILLINOIS NATURAL HISTORY SURVEY CIRCULAR.

32.—Pleasure With Plants. By L. R. Tehon. November, 1942. (Second printing, with revisions.) 32 pp., frontis. + 9 figs.

33.—Controlling Peach Insects in Illinois. By S. C. Chandler and W. P. Flint. August, 1939. 40 pp., frontis. + 32 figs.

34.—Rout the Weeds! Why, When and How. By L. R. Tehon. September, 1946. (Fourth printing, with revisions.) 48 pp., color frontis. + 13 figs.

39.—How to Collect and Preserve Insects. By H. H. Ross. May, 1944. (Second printing, with additions.) 55 pp., frontis. + 63 figs.

41.—How to Recognize and Control Termites in Illinois. By B. G. Berger. February, 1947. 44 pp., frontis. + 32 figs.

C.—ILLINOIS NATURAL HISTORY SURVEY MANUAL.

2.—Fieldbook of Illinois Land Snails. By Frank Collins Baker. August, 1939. 166 pp., color frontis. + 170 figs., 8 pls. $1.00.

3.—Fieldbook of Native Illinois Shrubs. By Leo R. Tehon. December, 1942. 307 pp., 4 color pls. + 72 figs., glossary, index. $1.25.

List of available publications, about 400 titles, mailed on request.

Address orders and correspondence to the Chief

ILLINOIS NATURAL HISTORY SURVEY

Natural Resources Building, Urbana, Illinois

Payment preferably in the form of U. S. Post Office money order made out to State Treasurer of Illinois, Springfield, Illinois, must accompany request for those publications on which a price is set.