# PROBLEMS

IN

# DESCRIPTIVE GEOMETRY

## FOR CLASS AND DRAWING ROOM

A COLLECTION OF OVER 900 DEFINITE PROBLEMS,
FOR STUDENTS IN ENGINEERING AND TECHNICAL SCHOOLS.
GENERAL PROBLEMS, SPECIAL CASES, APPLICATIONS,
WITH 85 PRACTICAL FIGURES.

BY

WALTER TURNER FISHLEIGH, A.B., B.S.
*Department of Mechanism and Drawing*
*University of Michigan*



PUBLISHED
*BY THE AUTHOR*
ANN ARBOR, MICH.

The Ann Arbor Press

## PREFACE

GREAT changes have been made in recent years in the courses offered in Technical and Engineering Schools, but in none has the advance been more marked than in Descriptive Geometry. Engineers and instructors early came to appreciate the practical value of a thorough course in Descriptive Geometry and its applications, and at the same time to realize that a working knowledge in such a subject could not be given to the student without dozens, if not to say hundreds, of original problems. The theory is comparatively simple, the figures in the text easily comprehended, but for the original lay-out, the special case, and the practical application, the student must be prepared by constant problem practice. Thus, just as the modern Law School has in many instances been led to adopt the "case method" of instruction, so has the Engineering School advanced to a method of instruction which might well be termed the *"Problem Method."*

It is to meet the demand for a complete set of original problems in Descriptive Geometry, which might be had by the student at a low price, that this book has been arranged. The aim of the author has been two-fold: first, to present to the student for reference and study, a collection of definite problems under each of the common general principles, including special cases and groups of applications illustrating the use of these principles in practical problems; second, to furnish for the instructor a book of simple notation in which he can readily find the particular sort of a problem desired, and of such scope and arrangement as to be convenient for use in assigning problems for blackboard work, for home study, or for drawing-room solution. In attempting to produce a thoroughly usable book, special attention has been paid to the following:—

1. **Lay-outs.** Adopting a 12″ × 18″ sheet as standard, problems have been carefully arranged for ⅛, ¼, ½, or 1 whole sheet, as the case may be. A number in brackets following the regular problem number indicates at once what part of a sheet is needed for the solution of each problem, so that several problems may be arranged conveniently on a large sheet, or each worked upon a separate sheet of the necessary size. For class blackboard work, the student has only to select some scale convenient for the problem at hand.

2. **Notation.** Points are located by co-ordinates which refer to the three common co-ordinate planes, H, V and P. A right line is located by giving the co-ordinates of two of its points. A plane is determined by locating the point of intersection of its H and V traces with the ground line, then giving the angles which its traces make respectively with the ground line.

This system has been tried in classes at the University of Michigan with striking success. The notation, being extremely simple and in strict accord with the notation of Solid Analytic Geometry and Trigonometry, is mastered by the student in one lesson. In the use of these co-ordinates for a given lay-out, the student must "think in space" and get in mind at the very outset the general location of points, lines and planes with respect to one another and the planes of projection. He is aided in "seeing" his problem and understanding "what he is about" by the very notation by which he locates given projections or traces upon the drawing sheet. For the instructor, a problem is easily "read" and at a glance he can select such a lay-out as he may desire.

3. **Quadrants.** Problems are given in all four quadrants, with a majority, however, in the third and first in order to familiarize the student with the arrangement of views for these two quadrants, which are commonly used in practice.

4. **Practical applications.** A large number of applications have been given to interest the student in his work, to give him at first hand a knowledge of

the way the different problems come up in practice, and to give him as soon as possible a working knowledge of Descriptive Geometry through problems where ingenuity and originality in applying the principles are as essential as the general analyses and figures of the text. The trouble with ordinary engineering students seems to be, not so much that they do not *know* their Descriptive Geometry, as that they cannot *apply* it. In reply to the possible criticism that a few of the problems offered are somewhat more artificial than practical, the author has only to say that they illustrate principles, that they interest the student more than mere point-line-plane problems, and that pedagogically they have been found by experience to be of value.

5. **Figures.** A large number of practical figures are presented on *blue prints* not only for use in the particular problems in this book, but with the hope of giving to the student and instructor a suggestion of the many useful applications of the subject in hand, and thus adding to his study an interest which perhaps could be stimulated in no other way. It had been the intention of the author to have plates made, but at the suggestion of practically all the instructors who have used the book, the figures are retained in blue print form. They give to the student at first hand, excellent examples of the kind of draughting which should be aimed at in a drawing course, and make valuable reference sheets, as the work progresses.

6. **Arrangement and grouping.** General grouping is made under (1) preliminary problems on the point, line and plane, (2) general problems based thereon, (3) representation of surfaces, (4) planes tangent to surfaces, (5) intersections and developments. Under each of these general groups are arranged smaller groups which cover general cases, special cases or variations, and practical applications. Particular attention has been paid to arrangement and headings, with a view to making the various problems easy of access and the book as a whole, convenient for the assigning of problems with desirable variation and sequence.

7. **Scope.** The scope of the book is thought to be sufficient for any elementary course in Descriptive Geometry.

The author would appreciate any suggestion as to additions or changes which it might seem desirable to make. While a large number of the problems included are original, he has felt free in consulting other works, and would mention the following to which he is indebted for many valuable ideas and suggestions:

ELEMENTS OF DESCRIPTIVE GEOMETRY.....A. E. CHURCH.
DESCRIPTIVE GEOMETRY.....J. A. MOYER.
ELEMENTS OF DESCRIPTIVE GEOMETRY.....C. W. MAC CORD.
NOTES ON DESCRIPTIVE GEOMETRY.....J. D. PHILLIPS AND A. V. MILLAR.
PROBLEMS IN DESCRIPTIVE GEOMETRY.....G. M. BARTLETT.
CARPENTRY AND SHEET METAL WORK...AMERICAN SCHOOL OF CORRESPONDENCE.
DESCRIPTIVE GEOMETRY FILES.....UNIVERSITY OF MICHIGAN.

The author wishes also to acknowledge the kind assistance and continued encouragement of his colleagues, Messrs. F. R. Finch and D. E. Foster of the University of Michigan.

W. T. FISHLEIGH.

Ann Arbor, Mich., June, 1910.

CONTENTS



## PRELIMINARY PROBLEMS.



## PROBLEMS ON THE POINT, LINE AND PLANE.

## REPRESENTATION OF SURFACES



## PLANES TANGENT TO SURFACES.



## TO FIND POINTS WHERE LINES PIERCE SURFACES

## INTERSECTIONS AND DEVELOPMENTS

### I. INTERSECTIONS OF SURFACES AND PLANES, TRUE SIZES OF INTERSECTION CURVES, DEVELOPMENTS, TANGENT LINES TO INTERSECTION CURVES.



### SHORTEST DISTANCES BETWEEN POINTS ON SURFACES.



### II. INTERSECTIONS OF TWO SURFACES.



### III. GENERAL INTERSECTIONS.



### IV. GENERAL APPLICATIONS.

## INTRODUCTORY.

**Working Space.** Adopting a $12'' \times 18''$ sheet with $\frac{1}{2}''$ border as a standard, problems have been divided into 4 classes: (1) those for whose solution a whole sheet is necessary, with the ground line as shown in Fig. 1; (2) those which can be arranged two on a sheet, with ground lines as shown in Fig. 2; (3) those which can be arranged four on a sheet, with ground line as shown in Fig. 3; (4) those for whose solution $\frac{1}{8}$ of a sheet is necessary, with ground line as shown in Fig. 3. After the problem number, a number is given in brackets, thus [1], [2], [4], [8], to indicate whether 1, 2, 4 or 8 such problems can be worked upon a standard sheet. Where such a number in brackets is given in a group heading, any problem in this group can be worked in the space indicated. Thus in the solution of problems in the drawing room or at home a standard sheet may be used and a number of problems arranged thereon in accordance with the space required, or each problem may be solved upon a separate sheet, using standard sheet, half standard, quarter standard, etc., as the particular problem may require.

**The Profile Plane and the Origin.** Unless otherwise stated the reference profile plane is assumed to be perpendicular to the ground line XX at the point where the latter cuts the right hand boundary line of the working space. Thus, in Fig. 4, the profile planes would be assumed to be perpendicular to the ground lines XX at the points marked O. The right hand boundary line of each working space would then represent the *profile* ground line. The point O is the origin of co-ordinates and from it will be located all points, as per the paragraph below.

Where it is desirable to have the profile plane located otherwise for any particular problem, or group of problems, the distance of the point O from the right hand boundary line of the working space will be given. Thus, a statement, P at $-5''$, would locate the profile plane and origin O as shown in Fig. 5.

**Location of points and right lines by co-ordinates.** Adopting the usual notation of Analytic Geometry, a point is located in space by its X, Y and Z co-ordinates, these co-ordinates respectively giving its distance from the profile, the vertical and the horizontal planes. A right line, likewise, is located by giving the co-ordinates of two of its points. X distances are considered + when to the right of the profile plane, and give in a particular case the distance from the profile ground line, of the line joining the H and V projections of a point. Y distances are considered + when in front of the vertical plane, and give the distance of the H projection of a point from the ground line. Z distances are considered + when above the horizontal plane, and give the distance of the V projection from the ground line.

*In short, distances are positive when to the right of P, the front of V, and above H.* Thus a point $M(-4'', +2'', -3'')$ is a point 4 inches to the left of P, $2''$ in front of V, and $3''$ below H, therefore in the 4th quadrant. To illustrate the complete problem notation, suppose a problem reads:—

173. [2] P at $-3\frac{1}{2}''$. Find the three projections of the line joining the point $A(-2'', -3'', -1'')$ with the point $B(-4'', +1'', +1'')$. The lay-out is shown with dimensions in Fig. 6.

**Location of planes.** The traces of a plane are located by giving first the distance from O of the point of intersection of the traces with the ground line XX,

then the angle which the H trace makes with the ground line, then the angle which the V trace makes with the ground line. Employing the usual trigonometric notation, angles measured counter-clockwise are positive, clockwise negative. The plane $T(-12'', +60°, -45°)$ is shown located in Fig. 7.

In case a plane T is parallel to the ground line, both traces will be parallel to the ground line and their point of intersection with the ground line is removed to an infinite distance from O. The notation $T(\infty, +4'', -3'')$ here indicates first that the traces are both parallel to the ground line, second that the H trace is 4″ in front of the vertical plane, third that the V trace is 3″ below H. The drawing board representation is given in Fig. 8. The notation $S(\infty, -3'', \infty)$ indicates a plane S, parallel to and 3″ behind V.

Planes may also be determined by giving the co-ordinates of three points, or of two intersecting or parallel lines therein. In special cases, when the above notation for traces is not convenient, the traces may be located by co-ordinates, considering them merely as right lines in H, V and P respectively.

### Abbreviations which may be used.

alt. = altitude.
const. = construction.
cyl. = cylinder.
dia. = diameter.
obl. = oblique.
par. = parallel.
perp. = perpendicular.
proj. = projection.
pt. = point.
quad. = quadrant.
rt. = right.
tang. = tangent.
G. L. = ground line.
H = horizontal plane.
V = vertical plane.
P = profile plane.
Fig. = figure.

## PRELIMINARY PROBLEMS.

### 1.—TO FIND THE H AND V PROJECTIONS OF POINTS.

1. Point A in 1st quad., 2″ from V, 1″ from H.
2. Point B in 2nd quad., $\frac{3}{4}$″ from V, 2″ from H.
3. Point C in 3rd quad., 1″ from V, $1\frac{1}{2}$″ from H.
4. Point D in 4th quad., $\frac{1}{2}$″ from V, $1\frac{1}{4}$″ from H.

---

5. Point E, in 4th quad., twice as far from H as from V.
6. Point F, in 3rd quad., one-third as far from H as from V.
7. Point G, in 2nd quad., equidistant from H and V.
8. Point H, in 1st quad., equidistant from H and V.

---

9. Point J, 2″ in front of V, $\frac{3}{4}$″ below H.
10. Point K, 1″ behind V, 1″ below H.
11. Point L, $1\frac{1}{2}$″ in front of V, 2″ above H.

---

12. Point M in V, $1\frac{1}{4}$″ above H.
13. Point N in V, 1″ below H.
14. Point O in H, 1″ in front of V.

---

15. Point Q, in the ground line.
16. Points R and S, both in the ground line and $\frac{3}{4}$″ apart.
17. Describe fully the location of the pts. A, B, E, H, M, in Fig. 9.
18. Describe fully the location of the pts. C, D, H, K, N, in Fig. 9.

### 2.—TO FIND THE H AND V PROJECTIONS OF LINES.

19. Line joining pt. A in 1st quad. with B in 2nd quad.
20. Line joining pt. C in 2nd quad. with D in 3rd quad.
21. Line joining pt. E in 3rd quad. with F in 4th quad.
22. Line joining pt. G in 4th quad. with H in 1st quad.
23. Line joining pt. J in 2nd quad. with K in 4th quad.
24. Line joining pt. L in 1st quad. with M in 3rd quad.

---

25. Line joining pt. N in H with O in 1st quad.
26. Line joining pt. P in H with Q in 2nd quad.
27. Line joining pt. R in H with S in 3rd quad.
28. Line joining pt. A in H with B in V.
29. Line joining pt. C in V with D in 1st quad.
30. Line joining pt. D in V with E in 3rd quad.

---

31. Line AB, par. to H, obl. to V, in 1st quad.
32. Line CD, par. to H, obl. to V, in 2nd quad.
33. Line EF, par. to V, obl. to H, in 3rd quad.
34. Line GH, par. to V, obl. to H, in 4th quad.

---

35. Line KL par. to ground line in 1st quad.
36. Line MN par. to ground line in 2nd quad.
37. Line OP par. to H and V in 3rd quad.
38. Line RS par. to H and V in 4th quad.

---

39. Line AB perp. to H in 1st quad.
40. Line CD perp. to H in 2nd quad.
41. Line EF perp. to V in 3rd quad.
42. Line GH perp. to V in 4th quad.

---

43. Line KL lying in H in front of V.
44. Line MN lying in V below H.

---

45. Line OP in the ground line.

---

46. Line RS in 1st quad. in a plane perp. to the G.L.
47. Line in a plane perp. to ground line, joining pt. A in 1st quad. to pt. B in 3rd quad.

---

48. Describe fully the positions of the lines AB, CD, EF, KL, MN, shown in Fig. 10.
49. Describe fully the positions of the lines GH, CD, OP, KL, MN, shown in Fig. 10.

**Intersecting lines.**

50. Lines AB and BC intersecting at a pt. B in the 1st quad.
51. Lines CD and DE intersecting at a pt. D in the 3rd quad.
52. Line FG, par. to H intersecting line GH at a pt. G in 2nd quad.
53. Line KL, par. to V intersecting line LM at a pt. L in 3rd quad.
54. Line NO, par. to the G.L., intersecting line OP at pt. O in 4th quad.
55. Line PQ, par. to the G.L., intersecting line QN at pt. Q in 3rd quad.
56. Line QR perp. to H, intersecting RS, par. to the G.L.
57. Line TU perp. to H, intersecting UV, par. to H.
58. Line YZ, perp. to V, intersecting ZM, par. to the G.L.

**Parallel lines.**

59. Parallel lines, obl. to H and V, through pts. A and C in 1st and 3rd quads. respectively.
60. Parallel lines, obl. to H and V, through pts. B and D in 2nd and 3rd quads. respectively.
61. Parallel lines, obl. to H and V, through pts. E and G in 3rd quad. and in H respectively.
62. Parallel lines, obl. to H and V, through pts. F and K, in 1st quad. and in V respectively.
63. Parallel lines, in 3rd quad., par. to H and obl. to V.
64. Parallel lines, both par. to the G.L., one in 3rd quad., one in H.
65. Parallel lines, both perp. to H, both in 4th quad.

## 3.—TO DETERMINE THE TRACES OF PLANES.

66. Plane R, obl. to both H and V.
67. Plane S, par. to H, and above H.
68. Plane T, par. to V, and behind V.
69. Plane U, par. to ground line, cutting across the 1st quad.
70. Plane R, perp. to ground line.
71. Plane S, perp. to H, obl. to V.
72. Plane T, perp. to V, obl. to H.
73. Plane U, passing through the ground line.
74. Describe fully the planes R, S, U, W, Z shown in Fig. 11.
75. Describe fully the planes R, P, Q, T, Z shown in Fig. 11.

**Parallel planes.**

76. Par. planes, R and S, obl. to both H and V.
77. Par. planes T and U, perp. to H, obl. to V.
78. Par. planes V and W, perp. to V, obl. to H.
79. Par. planes R and S, perp. to ground line.
80. Par. planes T and U, par. to V.
81. Par. planes V and W, par. to H.

## 4.—TO ASSUME RIGHT LINES IN GIVEN PLANES.

82. (a) In plane S, Fig. 11; (b) in plane U, Fig. 11.
82. (a) In plane S, Fig. 11; (b) in plane U, Fig. 11.
84. (a) In plane W, Fig. 11; (b) in plane Z, Fig. 11.
85. (a) In plane W, Fig. 11; (b) in plane Q, Fig. 11.

## 5.—REVOLUTION OF POINTS ABOUT GIVEN AXES.

86. The pt. A, Fig. 12, is to be revolved about the axis MN in H. Find the 2 projections of the pt. after revolution into H.
87. The pt. B, Fig. 13, is to be revolved about the axis RS in H. Find the 2 projections of the pt. after revolution into H.
88. The pt. C, Fig. 14, is to be revolved about the axis PQ into V. Find the 2 projections of the pt. where it falls into V.
89. The pt. D, Fig. 15, is to be revolved about the axis RS into V. Find the 2 projections of the pt. where it falls into V.

**Revolution of lines about given axes.**

90. The line AB, Fig. 16, is to be revolved about the axis MN (par. to AB in H) into H. Find its 2 projections in revolved position.
91. The line CD, Fig. 17, is to be revolved about the axis PQ (par. to CD in V) into V. Find its 2 projections in revolved position.
92. The line AB, Fig. 10, is to be revolved into H about its H projection as an axis. Find its 2 projections in revolved position.
93. The line EF, Fig. 10, is to be revolved into V about its V projection as an axis. Find its 2 projections in revolved position.
94. The line EF, Fig. 10, is to be revolved about the H projecting perpendicular of the pt. E until it is par. to V. Find its 2 projections in revolved position.
95. The line OP, Fig. 10, is to be revolved about the V projecting perpendicular of the pt. O until it becomes par. to H. Find its 2 projections in revolved position.

## 6.—PROFILE PROJECTIONS OF POINTS.

The student is referred to the problems in Set I. After assuming a profile plane, in each case, find the profile projections of the points given

96. In problems 1, 3, 7, 12.

## 7.—PROFILE PROJECTIONS OF LINES.

The student is referred to the problems in Set 2. Having assumed a profile plane, in each case, find the profile projections of the lines

97. In problems 25, 31, 39.
98. In problems 27, 33, 41.

## 8.—PROFILE TRACES OF PLANES.

The student is referred to the problems in Set 3. Having assumed a profile plane in each case, find the profile traces of the planes

99. In problems 66, 67, 69.
100. In problems 66, 68, 73.

## PROBLEMS ON THE POINT, LINE AND PLANE.

### 1.—TO FIND THE POINTS IN WHICH A GIVEN RIGHT LINE PIERCES THE PLANES OF PROJECTION.

Find the pts. M and N in which the following lines pierce H and V respectively.

General. [8]

101. Line joining pt. A($-2\frac{1}{4}''$, $-1''$, $-\frac{1}{4}''$) with B($-1\frac{1}{4}''$, $-2''$, $-1''$).
102. Line joining pt. C($-3''$, $+1\frac{1}{4}''$, $+\frac{1}{2}''$) with D($-1\frac{1}{4}''$, $+\frac{1}{4}''$, $+2''$).
103. Line joining pt. E($-3''$, $-2''$, $+\frac{1}{4}''$) with F($-1\frac{1}{2}''$, $-\frac{1}{2}''$, $+1\frac{1}{4}''$).
104. Line joining pt. G($-3\frac{1}{2}''$, $-1\frac{1}{2}''$, $-1''$) with H($-1\frac{1}{4}''$, $+\frac{1}{2}''$, $+2''$).
105. Line joining pt. K($-2\frac{3}{4}''$, $+1\frac{1}{2}''$, $+1''$) with L($-1\frac{1}{4}''$, $+\frac{1}{4}''$, $-1''$).

Lines par. to H or V. [8]

106. Line joining pt. A($-3''$, $-\frac{1}{2}''$, $-1''$) with B($-1\frac{1}{2}''$, $-1\frac{1}{2}''$, $-1''$).
107. Line joining pt. C($-3''$, $+1\frac{1}{2}''$, $+\frac{3}{4}''$) with D($-1\frac{1}{2}''$, $+\frac{1}{4}''$, $+\frac{3}{4}''$).
108. Line joining pt. E($-3''$, $-\frac{1}{2}''$, $-1\frac{1}{2}''$) with F($-1\frac{1}{2}''$, $-\frac{1}{2}''$, $+1\frac{1}{2}''$).
109. Line joining pt. G($-2\frac{3}{4}''$, $+1''$, $+1''$) with H($-1\frac{1}{4}''$, $+1''$, $-2''$).
110. Line joining pt. K($-3''$, $-\frac{1}{4}''$, $+\frac{3}{4}''$) with L($-1\frac{1}{2}''$, $-2''$, $+\frac{3}{4}''$).

Lines in plane par. to P. [8] P at $-2''$.

111. Line A($-1''$, $-1\frac{1}{4}''$, $-1\frac{1}{2}''$) B($-1''$, $-\frac{7}{8}''$, $-\frac{1}{2}''$).
112. Line C($0''$, $-1\frac{1}{2}''$, $+\frac{1}{2}''$) D($0''$, $-\frac{1}{4}''$, $-1\frac{1}{2}''$).
113. Line E($0''$, $-\frac{1}{2}''$, $-1\frac{1}{4}''$) F($0''$, $+1\frac{1}{2}''$, $+1\frac{1}{2}''$).

Find the H, V and P piercing points (M, N, O) of lines. [8] P at $-2''$.

114. Line A($-1\frac{1}{2}''$, $-\frac{1}{4}''$, $-2''$) B($-\frac{1}{2}''$, $-1''$, $-\frac{1}{2}''$).
115. Line C($-1\frac{3}{4}''$, $-1''$, $+1\frac{1}{2}''$) D($-\frac{1}{2}''$, $+\frac{3}{4}''$, $+\frac{1}{2}''$).
116. Line E($-\frac{1}{2}''$, $+1''$, $+\frac{3}{4}''$) F($+\frac{3}{4}''$, $-\frac{3}{4}''$, $-\frac{1}{4}''$).

Find the 3 projs. of the P piercing point (O) of given lines. [8] P at $-1\frac{1}{2}''$.

117. Line A($-1\frac{3}{4}''$, $-1''$, $-\frac{1}{2}''$) B($-\frac{1}{4}''$, $+1''$, $-\frac{1}{2}''$).
118. Line C($-2''$, $-\frac{1}{2}''$, $-1\frac{1}{4}''$) D($-\frac{1}{2}''$, $-\frac{1}{2}''$, $-1\frac{1}{4}''$).
119. Line E($-2''$, $0''$, $-\frac{1}{2}''$) F($-\frac{1}{2}''$, $0''$, $-1\frac{1}{4}''$).

FIND THE POINTS WHERE THE FOLLOWING LINES PIERCE A PLANE PARALLEL TO H AND BELOW H. [8]

120. Line M($-2\frac{3}{4}''$, $+1''$, $+1''$) N($-1''$, $+\frac{1}{2}''$, $-2''$).
121. Line O($-3''$, $-\frac{1}{2}''$, $-2''$) P($-1\frac{1}{2}''$, $-\frac{1}{2}''$, $+1\frac{1}{2}''$).
122. Line R($-3''$, $-\frac{1}{2}''$, $-1\frac{1}{2}''$) S($-1''$, $-1''$, $-\frac{1}{2}''$).

FIND THE PROJECTIONS OF THE LINES WHICH PIERCE THE PLANES OF PROJECTION RESPECTIVELY, AS FOLLOWS. [8]

123. V at A($-3''$, $0''$, $-1''$), H at B($-1\frac{1}{2}''$, $-2''$, $0''$).
124. V at C($-3''$, $0''$, $-1\frac{1}{2}''$), H at D($-1\frac{1}{2}''$, $+2''$, $0''$).
125. P at $-2''$. H at E($-1\frac{1}{4}''$, $-\frac{1}{2}''$, $0''$), P at F($0''$, $-1\frac{1}{2}''$, $-1''$).

## APPLICATIONS.

126. [4] On the plans for the mill building shown in Fig. 18, the line A$(-3'', -\frac{3}{4}'', -2\frac{1}{4}'')$ B$(-3'', -\frac{3}{4}'', -\frac{1}{8}'')$ gives the direction of the center line of a vertical pipe. Find the right end view (P projection) of the building and the 3 projections of the points M and N where this line pierces the floor planes F and S.

127. [4] On the plans for the mill building shown in Fig. 18, the line C$(-2'', -\frac{1}{8}'', -1\frac{1}{4}'')$ D$(-2'', -2'', -1\frac{1}{4}'')$ gives the direction of the center line of a telephone wire. Find the right end view (P projection) of the building and the 3 projections of the points K and L where this telephone wire pierces the walls parallel to V.

128. [4] On the plans for the mill building shown in Fig. 18, the line E$(-1'', -\frac{3}{4}'', -1\frac{1}{2}'')$ F$(-\frac{1}{4}'', -\frac{3}{4}'', -1\frac{1}{2}'')$ gives the direction of the center line of a shaft for an outside rope drive. Find the right end view (P projection) of the building and the 3 projections of the point R where this line pierces the right hand end of the building.

129. [8] In Fig. 32, find the point X where the tow-rope MB pierces the horizontal plane (extended) of the tow-path.

130. [8] In Fig. 32, find the point where the tow-rope MB, if extended, would pierce a vertical plane through the rear end of the canal boat.

131. [2] G. L. par. to long side of space. P at $-4''$. Suppose that the telegraph wire in Fig. 30 were to be extended in the line PW. Find (1) the profile projection (right end view) of the line and factory building, (2) the 3 projections of the point X where the line PW would pierce the horizontal plane of the floor ABC, of the point Y where it would pierce the plane of the rear wall parallel to ABFE, and of the point Z where the line PW would pierce the plane of the left vertical end wall of the building.

132. [2] G. L. par. to long side of space. P at $-4''$. Suppose that the telegraph wire in Fig. 30 were to be extended in the line PW. Find (1) the profile projection (right end view) of factory building and line PW, (2) the 3 projections of the point X where the line PW would pierce the horizontal plane of the roof of the building, of the point Y where the line PW would pierce a vertical partition plane half way between and parallel to the front and rear walls of the main part of the building, of the point Z where the line PW would pierce the plane of the left end wall of the building.

## 2.—TO FIND THE TRUE LENGTH OF A RIGHT LINE JOINING TWO GIVEN POINTS IN SPACE.

**General.** [8]

133. Line joining pt. A$(-3\frac{1}{4}'', -1\frac{1}{2}'', -1\frac{1}{4}'')$ with B$(-1\frac{3}{4}'', -\frac{1}{4}'', -\frac{1}{2}'')$.
134. Line joining pt. C$(-3'', -2'', +\frac{1}{4}'')$ with D$(-1\frac{1}{2}'', -\frac{1}{2}'', +1\frac{1}{4}'')$.
135. Line joining pt. E$(-3\frac{1}{2}'', -1\frac{1}{2}'', -1'')$ with F$(-1\frac{1}{4}'', +\frac{1}{2}'', +1'')$.
136. Line joining pt. G$(-3'', -\frac{1}{4}'', +1'')$ with H$(-1\frac{1}{2}'', -1\frac{1}{2}'', -1'')$.
137. Line joining pt. K$(-2\frac{3}{4}'', +1\frac{1}{2}'', +1'')$ with L$(-1\frac{1}{4}'', +\frac{1}{4}'', -1'')$.

**Lines joining points in H, V or P.** [8]

138. Line joining pt. A$(-3'', 0'', -1'')$ with B$(-1\frac{1}{2}'', -2'', 0'')$.
139. Line joining pt. C$(-3'', 0'', -1\frac{1}{2}'')$ with D$(-1'', +2'', 0'')$.
140. P at $-1''$. Line joining pt. E$(-1\frac{3}{4}'', 0'', -1'')$ with F$(0'', +1\frac{1}{2}'', +\frac{1}{2}'')$.

**Lines in plane perp. to G. L. [8] P at $-2''$.**

141. Line joining pt. $M(0'', -\frac{1}{2}'', -1\frac{1}{2}'')$ with $N(0'', -1'', -\frac{1}{2}'')$.

142. Line joining pt. $O(0'', -\frac{1}{2}'', -\frac{1}{2}'')$ with $P(0'', +1\frac{1}{2}'', -1\frac{1}{2}'')$.

143. Line joining pt. $R(0'', -1\frac{1}{2}'', +\frac{1}{2}'')$ with $S(0'', -1'', -1\frac{1}{2}'')$.

TO FIND A POINT ON A GIVEN LINE A GIVEN DISTANCE FROM ONE END. [8]

144. Find pt. in line $P(-3\frac{1}{4}'', -1\frac{1}{2}'', -1\frac{1}{4}'')$ $R(-1\frac{3}{4}'', -\frac{1}{4}'', -\frac{1}{2}'')$ which is $\frac{3}{4}''$ from R.

145. Find pt. in line $M(-3'', 0'', -1'')$ $N(-1\frac{1}{2}'', -2'', 0'')$ which is $1\frac{1}{2}''$ from M.

146. Find pt. in line $K(-3\frac{1}{2}'', -1\frac{1}{2}'', -1'')$ $L(-1\frac{1}{4}'', +\frac{1}{2}'', +1'')$ which is $1''$ from K.

TO FIND THE ANGLE A GIVEN RIGHT LINE MAKES WITH H AND V. [8]

147. Line $M(-2\frac{3}{4}'', -\frac{1}{2}'', 0'')$ $N(-1\frac{1}{4}'', -2'', -1'')$.

148. Line $O(-2\frac{3}{4}'', +1\frac{1}{2}'', +1'')$ $P(-1\frac{1}{4}'', +\frac{1}{4}'', -1'')$.

149. Line $D(-3'', +\frac{1}{2}'', -1\frac{1}{2}'')$ $E(-1'', +2'', -\frac{1}{4}'')$.

TO FIND THE PROJECTIONS OF A RIGHT LINE MAKING GIVEN ANGLES WITH H AND V. [8]

150. Find the projections of a line through the pt. $O(-2\frac{1}{4}'', +1\frac{1}{4}'', +1'')$ making 30° with H and 45° with V.

151. Find the projections of a line through the pt. $M(-2'', -\frac{3}{4}'', -\frac{3}{4}'')$ making 45° with H and $22\frac{1}{2}°$ with V.

152. Find the projections of a line through the pt. $P(-2\frac{1}{4}'', -1\frac{1}{4}'', -\frac{3}{4}'')$ making $22\frac{1}{2}°$ with H and 30° with V.

TO FIND THE 3 PROJECTIONS OF A POINT M ON A GIVEN LINE, EQUIDISTANT FROM BOTH H AND V. [8] P AT $-1\frac{3}{4}''$.

153. Line joining $A(-1\frac{1}{2}'', -\frac{1}{4}'', -2'')$ with $B(-\frac{1}{2}'', -1'', -\frac{1}{2}'')$.

154. Line joining $C(-1\frac{3}{4}'', -1'', -1\frac{1}{2}'')$ with $D(-\frac{1}{2}'', +2'', +\frac{1}{4}'')$.

155. Line joining $E(-2'', -\frac{1}{8}'', -\frac{1}{2}'')$ with $F(-\frac{1}{2}'', -1\frac{1}{2}'', -\frac{1}{2}'')$.

## APPLICATIONS.

156. [4] Find the true length of the hip rafter AC of the cottage in Fig. 19.

157. [4] Find the true length of the valley rafter MN of the cottage in Fig. 19.

158. [4] Find the distance from the point B in the ridge, to the point P, Fig. 19.

159. [4] Find the angle which the rafter BD makes with a horizontal plane through CD, Fig. 19.

160. [4] Find the angle which the hip rafter AC makes with a horizontal plane through CD, Fig. 19.

161. [2] In the cap for a ventilator shaft shown in Fig. 20, find the length of the intersection between the planes A and B; also the distance from the point N on the ridge of the ventilator cap to the point O.

162. [8] Find the length of the tug-of-war rope in Fig. 31.

163. [2] Find the lengths of the guy ropes AD, and CD of the boom derrick shown in Fig. 27 and the angle which CD makes with a horizontal plane through C. Find also the length of the boom FE and the true distance between the points A and C.

164. [2] Find the lengths of the guy ropes BD and AD of the boom derrick shown in Fig. 27, and the angle which BD makes with a horizontal plane through B. Find also the distance from the end of the boom F to the top of the mast D, and the straight line distance from E to B.

165. [8] In the lamp shade of Fig. 21, find the length of the piece E used on the edge between the planes A and B; also the distance from the point E to the point H of the base of the shade. Scale, 1″ = 1′–0″.

166. [4] In the skew bridge of Fig. 28, find the length of the members EI and HD of the portal bracing; also find the distance from the point C to the point B, and from the point M to L.

167. [4] In the skew bridge of Fig. 28, find the length of the members IF and CG of the portal bracing; also find the distance from the point A to D and from O to K.

168. [8] Find the length of the tow-rope MB of Fig. 32.

169. [4] What is the length of the telegraph wire PW of Fig. 30. How much farther is it from P to the point F of the roof. Scale, 1″ = 20′.

170. [8] Two stations A(– 28′, + 14′, + 9′) and B(– 10′, + 4′, + 1′) are to be connected by a telegraph line. Find the shortest line that could be constructed. Scale, $\frac{1}{8}$″ = 1′.

171. [8] The center line of a straight tunnel enters a hill at a point E(– 50′, – 25′, – 90′) and comes out at a point F(– 170′, – 80′, – 35′) on the other side. Find the length of the tunnel and its grade, that is, the angle it makes with the horizontal plane. Scale, 1″ = 50′.

172. [8] Two wireless telegraph stations are located at the points W(– 500′, + 800′, + 400′) and $W_1$(– 1800′, + 200′, + 400′) respectively. How far are they apart? Scale, 1″ = 500′.

## 3.—TO PASS A PLANE THROUGH 3 GIVEN POINTS. [4]

173. Pass plane through points M(– $4\frac{3}{4}$″, – $\frac{1}{4}$″, – 1″) N(– 4″, – $\frac{1}{2}$″, – $1\frac{1}{2}$″) and P(– $3\frac{3}{8}$″, – $1\frac{1}{4}$″, – $\frac{1}{2}$″).

174. Pass plane through points A(– 6″, – $\frac{1}{4}$″, – $1\frac{1}{2}$″) B(– 4″, – 1″, – $\frac{1}{4}$″) and C(– $1\frac{1}{2}$″, + 1″, + $\frac{3}{4}$″).

175. Pass plane through points E(– 6″, – $\frac{1}{4}$″, – $1\frac{1}{2}$″) F(– $4\frac{1}{2}$″, + $1\frac{1}{4}$″, – $\frac{1}{2}$″) and G(– 2″, 0″, – $1\frac{1}{2}$″).

### TO PASS A PLANE THROUGH TWO INTERSECTING LINES.

**General.** [4]

176. Lines A(– 6″, + 1″, 0″) B(– 4″, – 2″, + 1″) and BC(– $2\frac{1}{2}$″, + $\frac{1}{2}$″, – $1\frac{1}{2}$″).

177. Lines D(– $5\frac{3}{4}$″, + $\frac{1}{2}$″, – $1\frac{1}{2}$″) E(– $3\frac{1}{2}$″, + $1\frac{1}{4}$″, – $\frac{1}{2}$″) and EF(– $4\frac{1}{4}$″, 0″, + $\frac{1}{4}$″).

178. Lines G(– 6″, 0″, – 2″) H(– 4″, – 2″, – $\frac{1}{2}$″) and HK(– $1\frac{1}{2}$″, 0″, 0″).

**One line parallel to H or V or G. L.** [4]

179. Lines A(– 5″, – 1″, – 2″) B(– 3″, – 1″, – $\frac{1}{2}$″) and BC(– 4″, 0″, 0″).

180. Lines D(– 6″, – $1\frac{1}{2}$″, – $\frac{1}{2}$″) E(– 3″, + $1\frac{1}{2}$″, – $\frac{1}{2}$″) and EF(– $2\frac{1}{2}$″, 0″, + 2″).

181. Lines G(– 6″, – $\frac{1}{2}$″, – $1\frac{1}{4}$″) H(– 3″, – $\frac{1}{2}$″, – $1\frac{1}{4}$″) and HK(– 4″, – $1\frac{1}{4}$″, 0″).

**One line in plane parallel to P.** [4]

182. P at $-3''$. Line $A(-1'', 0'', -1\frac{1}{2}'')$ $B(-1'', -1'', -\frac{1}{2}'')$ and the line $BC(-3'', -\frac{1}{4}'', 0'')$.

183. Line $D(-5\frac{3}{4}'', +\frac{1}{2}'', -1\frac{1}{2}'')$ $E(-3\frac{1}{2}'', +1\frac{1}{4}'', -\frac{1}{2}'')$ and the intersecting line $EF(-3\frac{1}{2}'', -1\frac{1}{2}'', +\frac{3}{4}'')$.

184. Lines $A(-3'', +1'', -2'')$ $B(-3'', +1'', -\frac{1}{2}'')$ and $BC(-5'', 0'', -1'')$.

TO PASS A PLANE THROUGH TWO PARALLEL LINES. [4]

185. Line $A(-5'', -1\frac{1}{2}'', +1'')$ $B(-3'', 0'', -1\frac{1}{2}'')$ and line par. to AB through $C(-2'', +1\frac{1}{2}'', -\frac{1}{2}'')$.

186. Line $D(-5'', +\frac{3}{4}'', -\frac{1}{2}'')$ $E(-4'', -\frac{3}{4}'', -1'')$ and line par. to DE through $F(-4'', -1\frac{1}{2}'', 0'')$.

187. Lines par. to G. L. through $K(-6'', -\frac{1}{4}'', -2\frac{1}{4}'')$ and $M(-4'', +\frac{3}{4}'', -\frac{1}{2}'')$.

TO PASS A PLANE THROUGH A POINT AND A RIGHT LINE. [4]

188. Right line $F(-6'', -1'', -2'')$ $G(-2\frac{1}{2}'', -1\frac{1}{2}'', +\frac{1}{2}'')$ and the point $H(-4\frac{1}{2}'', +1'', +\frac{1}{2}'')$.

189. Right line parallel to ground line through $D(-6'', -\frac{1}{2}'', -1\frac{1}{4}'')$ and point $E(-4'', -1\frac{1}{4}'', 0'')$.

190. Right line $A(-3'', +1'', -2'')$ $B(-3'', +1'', -\frac{1}{2}'')$ and a given point $C(-5'', -\frac{1}{4}'', -1'')$.

## APPLICATIONS.

191. [4] Assuming a ground line somewhere between the two views of the cottage in Fig. 19, find the traces of the roof planes U, V and W.

192. [4] Assume a convenient ground line in Fig. 29 and find the traces of the roof planes R, S, T and X.

193. [2] Using the derrick of Fig. 27, find (1) the plane of the 2 guy wires DC and DB, (2) a plane passed through the pts. E, C and D, (3) the plane of the boom FE and the point C.

194. [4] In the skew bridge of Fig. 28, find (1) the traces of the plane of the portal, that is the plane ABDC, (2) the traces of a plane through the points C, D and L.

195. [4] In the skew bridge of Fig. 28, find (1) the traces of the plane of the lines AC and CD, (2) the traces of a plane through the 2 parallels MN and DJ.

196. [2] In the Gondola Car of Fig. 23, the several plates are shown by the projections of their bounding edges. Having assumed a convenient ground line, find the traces of the planes of the plates A, C, D and the door plate.

197. [2] G. L. par. to long side of space. P at $-4''$. In Fig. 30, find the three traces of the front wall of the wing of the factory building; also the traces of the plane of the three points P, W and B.

198. [4] Three vertical wells are driven at points $A(-50', +17', +53')$ $B(-95', +35', +44')$ and $C(-135', +15', +25')$ of a hill side, striking water at depths of 32 ft., 20 ft. and $22\frac{1}{2}$ ft. respectively. Find the traces of the water plane. Scale, $1'' = 20'$.

## 4.—TO FIND THE TRUE SIZE OF THE ANGLE BETWEEN TWO GIVEN INTERSECTING LINES AND TO FIND THE PROJECTIONS OF ITS BISECTOR.

**General. [4]**

199. Angle A($-2\frac{1}{2}''$, $-1\frac{1}{2}''$, $+\frac{1}{2}''$) B($-6''$, $-1''$, $-2''$) C($-4\frac{1}{2}''$, $+1''$, $+\frac{1}{2}''$) between lines AB and BC.

200. Angle D($-3\frac{1}{2}''$, $-1\frac{1}{2}''$, $+\frac{3}{4}''$) E($-5\frac{3}{4}''$, $+\frac{1}{2}''$, $-1\frac{1}{2}''$) F($-3\frac{1}{2}''$, $+1\frac{1}{4}''$, $-\frac{1}{2}''$) between lines DE and EF.

201. Angle G($-4''$, $-2''$, $+1''$) H($-2\frac{1}{2}''$, $+\frac{1}{2}''$, $-1\frac{1}{2}''$) K($-6''$, $+1''$, $0''$) between GH and HK.

**One side parallel to H or V, or G. L. [4]**

202. Angle A($-7''$, $-\frac{1}{4}''$, $-1''$) B($-6''$, $-\frac{1}{4}''$, $-1''$) C($-4''$, $-\frac{3}{4}''$, $+\frac{1}{2}''$) between lines AB and BC.

203. Angle D($-3''$, $-1''$, $-\frac{1}{2}''$) E($-5''$, $-1''$, $-2''$) F($-4''$, $0''$, $0''$) between lines DE and EF.

204. Angle G($-6''$, $-1\frac{1}{2}''$, $-\frac{1}{2}''$) H($-3''$, $+1\frac{1}{2}''$, $-\frac{1}{2}''$) K($-2\frac{1}{2}''$, $0''$, $+2''$) between lines GH and HK.

**One side perpendicular to H or V. [4]**

205. Angle A($-3''$, $+1\frac{1}{2}''$, $-2''$) B($-3''$, $+1\frac{1}{2}''$, $-\frac{1}{2}''$) C($-5''$, $-\frac{1}{4}''$, $-1\frac{1}{2}''$) between AB and BC.

206. Angle D($-5\frac{1}{2}''$, $+\frac{1}{2}''$, $+1''$) E($-5\frac{1}{2}''$, $+2''$, $+1''$) F($-4''$, $+\frac{1}{2}''$, $+2''$) between DE and EF.

207. Angle G($-6''$, $+1''$, $+\frac{1}{2}''$) H($-6''$, $+1''$, $+2''$) K($-4''$, $-1\frac{1}{4}''$, $-1\frac{1}{2}''$) between GH and HK.

### APPLICATIONS.

208. [4] In Fig. 19 find the true size of the angle between the hip rafters CA and EA.

209. [4] In Fig. 19, find the true size of the angle between the hip rafter EA and the ridge AB. Also find the projections of a line on the roof bisecting this angle.

210. [4] In Fig. 19, find the true size of the angle between the two valley rafters NM and MP.

211. [2] In the ventilator cap of Fig. 20, find the angle between KM and MN. Also find the projections of a line in the plane D which bisects this angle.

212. [4] In the roof of Fig. 29, find the angle between the hip rafters 10-14 and 11-14, and the projections of the line bisecting that angle.

213. [4] In the roof of Fig. 29, find the angle between the lines 1-7 and 1-5 and the projections of the bisector of this angle.

214. [2] In Fig. 27, find the angle between the derrick guy wires BD and CD. If a third guy wire be located so as to bisect this angle find its projection.

215. [2] In the derrick of Fig. 27, find the angle between the boom FE and the mast DE. The boom is to be raised to such a position as to bisect the present angle FED. Find its projections when in such a position.

216. [4] In the skew bridge of Fig. 28, find the angle between the end post AC and the portal strut CD. In repairing the portal bracing, a brace was run from the point C to the end post BD so as to bisect the angle ACD. Find its projections.

217. [4] In the skew bridge of Fig. 28, find the angle between the portal strut CD and the diagonal DL. Also find the projections of the bisector of this angle.

218. [4] A canal boat B($-4\frac{1}{2}''$, $+2\frac{1}{2}''$, $+\frac{1}{8}''$) is towed along a canal by two mules M($-3''$, $+1\frac{1}{2}''$, $+2''$) and N($-6\frac{1}{2}''$, $+\frac{1}{8}''$, $+\frac{3}{4}''$), one on each bank at different elevations. Find the angle between the ropes. Assuming that the mules exert equal forces, the course of the boat will be shown by the bisector of the angle between the tow ropes. Find this course.

## 5.—TO ASSUME CERTAIN LINES IN GIVEN PLANES.

**Piercing points given. [8]**

219. In plane R($-1''$, $+150°$, $-120°$), find line AB which pierces H $1''$ behind V and V $1''$ below H.
220. In plane S($-3\frac{1}{2}''$, $+30°$, $+45°$), find line CD which pierces H $1''$ behind V and V $\frac{1}{2}''$ above H.
221. In plane T($-2\frac{3}{4}''$, $-90°$, $+45°$), find line EF which pierces H $1\frac{1}{2}''$ in front of V and V $1''$ above H.

**Planes par. to ground line. [8] P at $-2''$.**

222. Plane R($\infty$, $-\frac{1}{2}''$, $-1''$). Find the 3 projections of the line that pierces H $1\frac{1}{4}''$ from P, and V $\frac{1}{4}''$ from P.
223. Plane S($\infty$, $+\frac{1}{2}''$, $-2''$). Find the 3 projections of the line that pierces H $1\frac{1}{2}''$ from P and V $\frac{1}{2}''$ from P.
224. Plane T($\infty$, $-1''$, $\infty$). Find the 3 projections of the line that pierces H $\frac{1}{2}''$ from P and makes an angle of 60° with H.

**Lines to make given angle with one trace. [8]**

225. Plane R($-3\frac{1}{2}''$, $+22\frac{1}{2}°$, $-45°$), find line AB which pierces H $1''$ behind V, and makes an angle of 30° with the H trace.
226. Plane S($-3''$, $-120°$, $-45°$), find line CD which pierces V $1''$ below H, and makes an angle of 60° with the V trace.
227. Plane T($-3''$, $+90°$, $-22\frac{1}{2}°$), find line EF which pierces V $\frac{3}{4}''$ below H, and makes an angle of 45° with the V trace.

**Lines parallel to one trace. [8]**

228. In plane R($-1''$, $+150°$, $-120°$) find line AB which is par. to its H trace and $1\frac{1}{2}''$ below H.
229. In plane S($-3\frac{1}{2}''$, $+30°$, $+45°$) find the line CD which is par. to its V trace and $1''$ behind V.
230. In plane T($-2\frac{3}{4}''$, $-90°$, $+45°$) find line EF which is par. to its V trace, and $1''$ in front of V.

**Passing through G. L. at equal angles with H and V traces. [8]**

231. In plane R($-2''$, $+90°$, $-90°$) find line AB which passes through the G.L. and makes equal angles with its H and V traces.
232. In plane S($-2\frac{3}{4}''$, $-90°$, $+45°$) find line CD which passes through the G.L. and makes equal angles with its H and V traces.
233. In plane T($-3''$, $+120°$, $-45°$) find line EF which passes through the G.L. and makes equal angles with its H and V traces.

**Lines parallel to and at given distance from trace. [8]**

234. Plane T($-3\frac{1}{2}''$, $+22\frac{1}{2}°$, $-45°$), find line par. to the H trace and $\frac{1}{2}''$ therefrom.
235. Plane S($-2''$, $+90°$, $+135°$), find line par. to the V trace and $1''$ therefrom.
236. Plane R($-3''$, $-120°$, $-45°$), find line par. to the V trace and $1\frac{1}{4}''$ therefrom.

**One projection given, to find the other.** [8]

237. The point $O(-2'', -\frac{1}{2}'', z)$ is a point in the plane $T(-3\frac{1}{2}'', +45°, -30°)$. Find its unknown projection.

238. The point $M(-2'', +1'', z)$ is a point in the plane $R(-1'', +90°, +135°)$. Find its unknown projection.

239. The point $O(-2\frac{1}{2}'', y, -\frac{3}{4}'')$ is a point in the plane $S(\infty, -1'', -1\frac{1}{2}'')$. Find its unknown projection.

240. The triangle $A(-2'', -\frac{1}{2}'', z)$ $B(-1\frac{1}{2}'', -1\frac{1}{2}'', z)$ $C(-1'', -\frac{1}{4}'', z)$ lies in the plane $R(-3\frac{3}{4}'', +45°, -30°)$. Find its V projection.

241. The triangle $M(-2'', +\frac{1}{2}'', z)$ $N(-1'', +1\frac{1}{2}'', z)$ $O(-3'', +1'', z)$ lies in the plane $S(-1'', -90°, +150°)$. Find its V projection.

242. A parallelogram in the plane $S(\infty, -1'', -1\frac{1}{2}'')$ has three vertices $A(-1\frac{1}{2}'', y, -\frac{1}{2}'')$ $B(-3'', y, -\frac{1}{4}'')$ and $C(-3\frac{1}{2}'', y, -1'')$. Find its projections.

243. A parallelogram in the plane $T(-1'', +150°, -135°)$ has 3 vertices $M(-3'', -\frac{1}{4}'', z)$ $N(-3\frac{3}{4}'', -1'', z)$ and $O(-2'', -\frac{3}{4}'', z)$. Find its projections.

## APPLICATIONS

### AND LOCATION OF GIVEN FIGURES IN GIVEN PLANES.

244. [4] Plane $T(-6'', -45°, +30°)$. Find the projections of a 1″ square, lying in the plane above H, two of its sides par. to the H trace and when center is at a pt. which is $\frac{3}{4}''$ from the H trace and 2″ from the point of intersection of the traces at the ground line.

245. [4] Plane $S(-3'', +157\frac{1}{2}°, -90°)$ is one side of a portable sheet iron cottage. Find the projections of a square window, whose center is located $1\frac{1}{2}''$ below H and 2″ from the vertical trace of the plane. The window is $1\frac{1}{4}''$ square, to the scale of the drawing.

246. [4] In plane $T(-3'', +120°, -135°)$, find the projections of a circle, of $1\frac{1}{2}''$ diameter, lying in the plane below H and behind V, whose center is horizontally projected at $(-4\frac{1}{4}'', -1'', 0'')$.

247. [4] The inclined plane $S(-6'', +90°, -30°)$ is the top of a sheet iron vat. A conveyor tube enters the vat perpendicular to the plane S. The section of the pipe is a circle of 2″ diameter, and the center line of this tube pierces the plane at a pt. 1″ below H and $1\frac{1}{2}''$ from the V trace, to the scale of the drawing. Find the projections of the hole to be cut from the plane to admit the conveyor.

248. [4] The plane $T(-6'', +45°, -30°)$ is the north roof of an observation tower on a summer residence. A hole is cut in this roof for a fire-place chimney which is to be built in the form of a regular hexagonal prism. The horizontal projection of the hole is therefore a regular hexagon, and in the particular drawing, each side of this hexagon measures 1″, with its center at a point $O(-3'', -1\frac{1}{4}'', z)$ in the roof plane, and with 2 sides parallel to the ground line. Find the V projection and the actual size of the hole.

249. [4] A hole 3 ft. square is to be cut in the roof plane U of Fig. 19 for a vertical chimney. The hole is to have 2 of its sides parallel to EF and its center located at a point 4 feet from EF and FB. Find the projections of this hole.

250. [2] A circular steam pipe of 2″ diameter passes through the roof $T(-3\frac{1}{2}'', +135°, -120°)$ of a factory extension, with its center line horizontal and perpendicular to V, through a point $O(-6'', y'', -1\frac{1}{2}'')$ in the roof plane. Find the 2 projections of the hole cut in the roof.

251. [2] Ornaments upon the glass sides A, B, etc. of the lamp shade in Fig. 21, are 3″ squares and radiating diagonals, located symmetrically as shown. Find the projections of the ornaments.

## 6.—TO FIND THE LINE OF INTERSECTION, AB, OF TWO GIVEN PLANES.

**General.** [4]

252. Planes T($-6\frac{1}{2}''$, $+45°$, $-30°$) and U($-1''$, $+150°$, $-120°$).
253. Planes R($-6''$, $+67\frac{1}{2}°$, $+120°$) and S($-3''$, $+135°$, $+60°$).
254. Planes P($-6''$, $-45°$, $+67\frac{1}{2}°$) and Q($-3''$, $+60°$, $-45°$).

**Including planes perpendicular to H or V.** [4]

255. Planes W($-5\frac{1}{2}''$, $-45°$, $+90°$) and Q($-2''$, $+135°$, $+150°$).
256. Planes R($-6''$, $+90°$, $-30°$) and S($-3\frac{1}{2}''$, $+135°$, $+45°$).
257. Planes T($-5''$, $-90°$, $-30°$) and V($-3''$, $+135°$, $+90°$).

**Including planes parallel to ground line.** [4]

258. Planes W($-6''$, $-45°$, $+45°$) and Q($\infty$, $+2''$, $+1''$).
259. Planes R($\infty$, $\infty$, $+1\frac{1}{2}''$) and S($-6''$, $+30°$, $+67\frac{1}{2}°$).
260. Planes T($\infty$, $+1\frac{1}{2}''$, $-1''$) and U($\infty$, $-1\frac{1}{8}''$, $-\frac{1}{2}''$).

**Including planes perpendicular to ground line.** [4] **P at $-3''$.**

261. Planes R($-3''$, $+30°$, $-22\frac{1}{2}°$) and P.
262. Planes S($-2''$, $-150°$, $-45°$) and P.
263. Planes T($-3''$, $+90°$, $-30°$) and plane U par. to P and $1''$ to left of P.

**Traces not intersecting within limits of drawing.** [4]

264. Planes W($-6''$, $+67\frac{1}{2}°$, $-30°$) and Q($-2''$, $+112\frac{1}{2}°$, $-120°$).
265. Planes R($-4''$, $-90°$, $+30°$) and S($-5\frac{1}{2}''$, $-90°$, $+67\frac{1}{2}°$).
266. Planes T($\infty$, $-1''$, $+2''$) and U($\infty$, $-\frac{3}{8}''$, $-2''$).

### APPLICATIONS.

267. [2] In Fig. 20, find the traces of the planes A and B and then find their line of intersection. (It should check with the line MO.)

268. [2] In Fig. 20, find the traces of the planes A and C and then find their line of intersection, XY.

269. [4] In the cottage of Fig. 19, find the traces of the planes R and V and then find their intersection. (It should check with the line MO.)

270. [2] In Fig. 29, find the intersection of the planes R and X.

271. [2] In Fig. 29, determine the lines of intersection 7-8 and 9-8 between the roof planes T, U and S.

272. [8] In Fig. 32, find the projections of the edges of the banks, that is, the intersections of the planes N and S with the horizontal planes of the tow-path and the north bank.

273. [8] In Fig. 31, find the water lines on the banks, that is the intersections of the banks N and S with the plane of the water.

274. [4] In the skew bridge of Fig. 28, find the intersection of the plane of the portal ABCD and the plane determined by the diagonal members CN and CK.

275. [2] Fig. 34 shows in outline two dormers on the roof of a country hotel. Find the valley lines of the dormers (that is, the lines of intersection between the dormer roof planes and the planes of the roof).

276. [2] A vertical partition wall is to be built in the top story of the gymnasium in Fig. 29, through the point M and parallel to the hip rafter 11-14. Find the lines in which the partition wall will meet the roof planes T, X, U, S and Q.

277. [2] A concrete dock wall has cross-section and dimensions as shown in Fig. 35. A retaining wall meets it at an angle, as shown. Find all the intersection lines of the planes of these two walls, completing all views.

278. [4] The plane T($-3''$, $-22\frac{1}{2}°$, $+30°$) is the top surface of a vein of coal, to which an inclined conveyor shaft is being run. The floor of this shaft is determined by the two lines A($-4\frac{1}{2}''$, $-1\frac{3}{8}''$, $-1\frac{1}{2}''$) B($-7''$, $-\frac{1}{4}''$, $-\frac{1}{2}''$) and C($-4\frac{1}{2}''$, $-\frac{1}{8}''$, $-2\frac{1}{4}''$) D($-7''$, $+1''$, $-1\frac{1}{4}''$). Find the line XY in which the shaft plane will cut the coal vein.

279. [2] The five planes Q($\infty$, $+\frac{1}{4}''$, $\infty$), R($-1''$, $-135°$, $+112\frac{1}{2}°$), S($-8''$, $-45°$, $+67\frac{1}{2}°$), T($-3\frac{1}{2}''$, $-90°$, $+102\frac{1}{2}°$) and U($-5\frac{1}{2}''$, $-90°$, $+77\frac{1}{2}°$) are the faces of a bridge pier, such as shown in Fig. 44, whose base is in H and whose top is shown $2\frac{1}{2}''$ above H. Find the projections of the edges of the pier.

280. [2] The plane T($-6''$, $-60°$, $+45°$) is a side plane of a conveyor hopper. A wooden shute feeding into this hopper has one of its sides determined by the lines A($-1\frac{1}{2}''$, $-1''$, $-1\frac{7}{8}''$) B($-4''$, $-\frac{1}{2}''$, $-2\frac{1}{8}''$) and a line through the point C($-3\frac{3}{4}''$, $-1\frac{5}{8}''$, $-\frac{3}{4}''$) parallel to AB. Find the line in which the hopper plane is cut by the shute plane.

281. [2] Construct the projections of a regular square pyramid (whose base is $2''$ square, altitude $2''$) standing in the 1st quad. on H. Assume a convenient oblique plane, and find the intersection of the plane with the pyramid.

## 7.—TO FIND THE POINT P IN WHICH A GIVEN RIGHT LINE PIERCES A GIVEN PLANE.

**General.** [4]

282. Find pt. where line A($-5''$, $+\frac{1}{2}''$, $0''$) B($-3\frac{1}{2}''$, $+2''$, $+1''$) pierces plane T($-2\frac{1}{2}''$, $-135°$, $+150°$).

283. Find pt. where line C($-5''$, $+\frac{1}{2}''$, $+1''$) D($-3''$, $+\frac{1}{2}''$, $+1''$) pierces plane S($-5''$, $+120°$, $+45°$).

284. Find pt. where line E($-6''$, $-1''$, $-\frac{1}{2}''$) F($-4''$, $-1''$, $-2''$) pierces plane U($-3''$, $+112\frac{1}{2}''$, $-150°$).

**Plane parallel to the ground line.** [4]

285. Find pt. where line A($-6''$, $-2''$, $-1\frac{1}{2}''$) B($-3''$, $-\frac{1}{2}''$, $+\frac{1}{4}''$) pierces plane T($\infty$, $-1\frac{1}{2}''$, $\infty$).

286. Find pt. where line C($-6''$, $-\frac{1}{4}''$, $-2''$) D($-4''$, $-\frac{1}{4}''$, $-\frac{1}{2}''$) pierces plane S($\infty$, $-1''$, $-1\frac{1}{2}''$).

287. Find pt. where E($-6''$, $+1\frac{1}{2}''$, $-1\frac{1}{2}''$) F($-5''$, $+1''$, $-\frac{1}{2}''$) pierces plane U($\infty$, $-1\frac{1}{2}''$, $+\frac{1}{2}''$).

**Plane perpendicular to H or V or both.** [4]

288. Find pt. where line A($-4''$, $+\frac{1}{2}''$, $0''$) B($-2\frac{1}{2}''$, $+2''$, $+1\frac{1}{2}''$) pierces plane T($-6''$, $-30°$, $-90°$).

289. Find pt. where line C ($-6''$, $0''$, $+1''$) D ($-3''$, $-1\frac{1}{2}''$, $-1\frac{1}{2}''$) pierces plane S ($-3\frac{1}{2}''$, $+90°$, $+45°$).

290. P at $-3''$. Find pt. where line E($-3''$, $+1''$, $-\frac{1}{2}''$) F($-1''$, $-\frac{1}{2}''$, $-1''$) pierces P.

**Plane given by 2 right lines in it.** [4]

291. Find the pt. P where the line M($-5\frac{1}{4}''$, $+1\frac{1}{2}''$, $0''$) N($-4''$, $0''$, $+1\frac{1}{2}''$) pierces the plane determined by the intersecting lines A($-5\frac{3}{4}''$, $+2''$, $+1\frac{1}{2}''$) B($-4\frac{1}{4}''$, $+1\frac{1}{4}''$, $+1\frac{1}{4}''$) and BC($-5\frac{1}{2}''$, $+\frac{1}{2}''$, $+\frac{1}{2}''$). Solve without finding the traces of the plane.

292. Find the pt. P where the line M($-5\frac{1}{2}''$, $-1\frac{1}{2}''$, $-1\frac{3}{4}''$) N($-3''$, $0''$, $-\frac{1}{4}''$) pierces the plane determined by the intersecting lines A($-6''$, $-1''$, $+\frac{1}{2}''$) B($-3''$, $-1''$, $-1''$) and BC($-6''$, $+2''$, $-1''$). Solve without finding the traces of the plane.

293. Find the pt. P where the line $M(-6'', -1'', -\frac{1}{2}'')$ $N(-3\frac{1}{2}'', +2'', +\frac{1}{2}'')$ pierces the plane determined by line $A(-6'', -\frac{1}{4}'', -\frac{1}{2}'')$ $B(-4'', -1'', -1'')$ and a line through $C(-4'', +\frac{1}{2}'', -2'')$ parallel to AB. Solve without finding the traces of the plane.

## APPLICATIONS.

294. [4] In Fig. 18 a mill building is shown. It is proposed to run a telephone wire $A(-64', -2', -10')$ $B(-28', -22', -10')$ to an office in the second floor. Find the point X where this wire would go through the roof.

295. [4] In the mill building of Fig. 18, a brace is to be run to the roof from a point on a heavy beam in the second floor. If the center line of the brace is $B(-32', -16', -20')$ $R(-10', -24', -2')$ find its ends in the roof and floor.

296. [2] In Fig. 34, find the valley lines of the dormers by finding the points where the several hip lines pierce the roof planes, without finding the traces of the dormer roof planes.

297. [2] Find the intersections of the faces of the 2 concrete walls of Fig. 35, by finding where the edges of the lower wall pierce the slope plane of the higher wall.

298. [2] In Fig. 30, find where the center line PW of the telephone wire, if extended, would pierce horizontal planes through the bottom floor, top floor and roof of the factory building, also all vertical wall planes of the wing and main part.

299. [4] A sloping floor in a laboratory is given by its wall intersections $A(-6\frac{1}{4}'', +\frac{3}{4}'', +\frac{1}{4}'')$ $B(-3\frac{1}{2}'', +\frac{3}{4}'', +1\frac{3}{4}'')$ and $BC(-3\frac{1}{2}'', +1\frac{7}{8}'', +\frac{1}{4}'')$. A steam pipe with center line $M(-5\frac{1}{2}'', +1\frac{3}{4}'', +1'')$ $N(-2\frac{3}{4}'', 0'', +1'')$ passes through this floor at a point X. Find X.

300. [4] The plane $S(-6\frac{1}{2}'', +90°, -30°)$ is the top surface of a coal vein, to which an inclined bore-hole was driven in the line $A(-6'', -2\frac{1}{4}'', -1\frac{1}{2}'')$ $B(-3'', -\frac{1}{2}'', -\frac{1}{4}'')$ from the point A on the ground. Find the point X where the hole strikes the vein, and the length of the hole.

301. [4] The plane $S(-6\frac{1}{2}'', -30°, +30°)$ is the top surface of a coal vein, to which a vertical bore-hole was driven, from the point $A(-4'', +\frac{1}{2}'', +2\frac{1}{4}'')$. Find the point where the drill strikes the coal, and the length of the hole, if scale is $1'' = 1'-0''$.

302. [2] Scale, $1'' = 10'$. Vertical borings at three points $A(-67', +22', +23')$ $B(-42', +6', +20')$ and $C(-26', +15', +12')$ of a hillside show an ore vein at depths of 20′, 5′ and 11′ respectively. It is proposed to run a shaft to this vein with center line $M(-20', +30', +27')$ $N(-45', +10', 0')$. How long will this shaft be?

303. [2] Construct the projections of a regular square pyramid (base 2″ square, altitude 3″) standing on H in the first quadrant. Assume an oblique plane and find the intersection of this plane with the pyramid. (Hint: Join the points where the edges of the pyramid pierce the given plane.)

304. [2] Construct the projections of a 3″ cube in the 3rd quadrant with its upper base in H. Assume a convenient oblique plane and find the intersection of this plane with the cube. (See hint in problem above.)

305. [4] The plane $M(-6\frac{1}{2}'', -30°, +45°)$ is a mirror from which a ray of light $L(-5\frac{1}{2}'', +1'', +2\frac{3}{8}'')$ $I(-3'', +1'', +\frac{1}{2}'')$ is reflected at a point R. Find R.

306. [2] Two vertical poles are located on a hillside $S(-112', -30°, +45°)$ in such position that their center line if extended would pass through the points $A(-76', +18', +24')$ and $B(-32', +48', +28')$ respectively. Find the projections and length of a wire joining insulators on tops of these poles which are 20′ above the points where the poles enter the ground. Scale, $1'' = 16'$.

## 8.—THROUGH A GIVEN POINT TO DRAW A LINE PERPENDICULAR TO A GIVEN PLANE AND TO FIND THE DISTANCE FROM THE POINT TO THE PLANE.

**General.** [4]

307. Point A$(-3'', -\frac{3}{4}'', -1'')$ and plane R$(-6'', +30°, -45°)$.
308. Point B$(-3'', 0'', +\frac{1}{4}'')$ and plane S$(-5'', +120°, +45°)$.
309. Point C$(-3'', -1'', -2'')$ and plane T$(-3'', +120°, -150°)$.

**Plane parallel to the ground line.** [4] **P at $-3''$.**

310. Point A$(-1'', -\frac{1}{4}'', -\frac{1}{2}'')$ and plane R$(\infty, -1'', -1\frac{1}{2}'')$.
311. Point B$(-1'', -1'', -1'')$ and plane S$(\infty, -2'', +\frac{1}{2}'')$.
312. Point C$(-1'', -\frac{1}{2}'', -1\frac{1}{2}'')$ and plane T$(\infty, -1'', \infty)$.

**Planes perpendicular to H or V or both.** [4]

313. Point A$(-5'', +\frac{1}{2}'', +1\frac{1}{2}'')$ and plane R$(-6'', +90°, +30°)$.
314. Point B$(-5'', -\frac{1}{2}'', -1'')$ and plane S$(-3'', +90°, -135°)$.
315. Point D$(-1'', -1'', -1\frac{1}{2}'')$ and profile plane P, at $-3''$.

THROUGH A GIVEN POINT TO PASS A PLANE PERPENDICULAR TO A GIVEN PLANE. [4]

316. Point A$(-4'', -1\frac{1}{2}'', -\frac{1}{2}'')$ and plane R$(-6'', +30°, -30°)$.
317. Point B$(-2'', +1'', +1\frac{1}{2}'')$ and plane S$(-2'', -120°, -67\frac{1}{2}°)$.
318. Point C$(-4'', +1\frac{1}{2}'', +\frac{1}{2}'')$ and plane T$(-6'', +90°, -30°)$.

THROUGH A GIVEN LINE IN A GIVEN PLANE TO CONSTRUCT A PLANE T PERPENDICULAR TO THE GIVEN PLANE. [4]

319. Line AB in plane S$(-6'', -60°, +30°)$, which pierces H $1\frac{1}{2}''$ in front of V and V $1\frac{1}{2}''$ above H.
320. Line BC in plane R$(-3'', +135°, -150°)$, which pierces V $\frac{3}{4}''$ below H and is parallel to the H trace of plane R.
321. Line CD in plane U$(-6'', +45°, -45°)$ which is parallel to the V trace and $1''$ distant therefrom.

### APPLICATIONS.

322. [4] A brace is to be run from an assumed point M in the floor S of Fig. 18, perpendicular to the roof R. Find its center line projection and its length.

323. [4] In the skew bridge of Fig. 28 find the distance from the point N to the portal plane, determined by the points ABDC.

324. [2] In the derrick of Fig. 27, find the distance of the end of the boom F from the plane of the two guy wires DB and DC.

325. [2] In Fig. 27, find the distance of the top of the derrick mast D, from the plane of the guy wire posts A, B and C.

326. [2] The points A$(-1\frac{7}{8}'', +3\frac{1}{4}'', +\frac{1}{2}'')$ B$(-7\frac{1}{8}'', +4\frac{7}{8}'', +2\frac{3}{8}'')$ and C$(-5\frac{1}{2}'', +1'', +3\frac{3}{4}'')$ are in the roof of a mill building. The force due to the wind is normal to the roof plane. Draw through a point M$(-3\frac{1}{4}'', +3\frac{3}{4}'', +4\frac{1}{2}'')$ the projections of an arrow which will show the direction of the wind pressure. Make the tip of the arrow just touch the roof plane, and find the arrow length.

327. [4] The plane F$(-3'', -135°, +135°)$ is the plane of a fly wheel, whose shaft is perpendicular to F. Assume the projections of the center line of the shaft and find the projections of a point in the center line which is $2''$ from the wheel plane F.

328. [4] The plane T$(-7'', -22\frac{1}{2}°, +60°)$ is one plane of the top of a grain bin. A shute runs into this bin perpendicular to the plane T, and has a center-line length of 2 feet. Assume its center line, and then find both ends thereof. Scale, $1'' = 1'-0''$.

329. [2] At three points A$(-40', +3\frac{1}{2}', +32')$ B$(-23', +11', +15')$ and C$(-32\frac{1}{2}', +24', +14')$ vertical borings strike coal at 7′, 5′ and 12′. It is proposed to run an inclined shaft perpendicular to the vein from a point M$(-25', +12', +28')$. $\frac{1}{8}'' = 1' - 0''$. Find the length of this shaft.

330. [2] Borings in a coal region show coal at the points A$(-25', +1\frac{1}{2}', +3')$ B$(-8\frac{1}{2}', +9\frac{1}{2}', +8')$ and C$(-14', +3', +14\frac{1}{2}')$. Assuming that the surface of the coal is a plane, find the length of the shortest shaft that can be driven from the point M$(-25', +9\frac{1}{2}', +11')$ to the vein. Scale, $\frac{1}{4}'' = 1' - 0''$.

331. [2] Vertical wells at points A$(-124', +7', +38')$ B$(-70', +15', +82')$ and C$(-42', +47', +61')$ on a mountain slope strike water at depths of 22′, 10′ and 20′ respectively. Assuming that these 3 points determine the plane of the water, what is the direction and length of the shortest pipe that could be driven from the point M$(-103', +40', +64')$ to strike water. Scale, $1'' = 20'$.

## 9.—TO PROJECT A GIVEN RIGHT LINE UPON A GIVEN PLANE.

**General.** [4]

333. Line A$(-4\frac{1}{2}'', -1\frac{1}{4}'', -\frac{1}{4}'')$ B$(-3'', -\frac{3}{4}'', -\frac{5}{8}'')$, plane R$(-6'', +30°, -45°)$.
334. Line B$(-5'', +2'', +1'')$ C$(-3'', 0'', -\frac{1}{4}'')$ and plane S$(-5'', +120°, +45°)$.
335. Line C$(-3'', -1'', -2'')$ D$(-5'', -1'', -\frac{1}{4}'')$, plane T$(-3'', +120°, -150°)$.

**Plane parallel to ground line.** [4] **P at $-3''$.**

336. A$(-3'', -\frac{1}{4}'', -2'')$ B$(-1'', -\frac{1}{4}'', -\frac{1}{2}'')$ and plane R$(\infty, -1'', -1\frac{1}{2}'')$.
337. Line B$(-3'', +\frac{1}{2}'', +1\frac{1}{4}'')$ C$(-1'', -1'', -1'')$ and plane S$(\infty, -2'', +\frac{1}{2}'')$.
338. Line C$(-3'', -1\frac{1}{2}'', -\frac{1}{4}'')$ D$(-1'', -\frac{1}{2}'', -1\frac{1}{2}'')$ and plane T$(\infty, -1'', \infty)$.

**Plane perpendicular to H or V or both.** [4]

339. Line A$(-5'', +\frac{1}{2}'', +1\frac{1}{2}'')$ B$(-2\frac{1}{2}'', +2'', +1'')$, plane R$(-6'', +90°, +30°)$.
340. Line B$(-5'', -\frac{1}{2}'', -1'')$ C$(-3'', -1\frac{1}{2}'', -1'')$, plane S$(-3'', +90°, -135°)$.
341. Line C$(-3'', +\frac{1}{2}'', +2'')$ D$(-1'', -1'', -1\frac{1}{2}'')$ and profile plane. P at $-3''$.

TO PROJECT GIVEN FIGURES UPON GIVEN PLANES.

342. [4] Find the projection ABC of the triangle M$(-6\frac{1}{2}'', +2'', +1\frac{1}{2}'')$ N$(-5'', +2'', +2'')$ O$(-5\frac{1}{2}'', +\frac{3}{4}'', +1'')$ upon plane R$(-6'', -45°, +45°)$.
343. [4] Find the projection ABC of the triangle M$(-5'', -1\frac{1}{2}'', -1'')$ N$(-3'', -1\frac{1}{2}'', -1'')$ O$(-5\frac{1}{2}'', -\frac{1}{2}'', -1\frac{1}{2}'')$ upon plane S$(-3'', +135°, -135°)$.

## APPLICATIONS.

344. [4] Asuming that rays of incident light are perpendicular to the mirror plane M$(-7\frac{1}{2}'', -45°, +30°)$, find the reflection of a rectangular frame ABCD of which A$(-4'', +\frac{3}{8}'', +1'')$ B$(-4'', +1\frac{3}{8}'', +1'')$ and BC$(-4'', +1\frac{3}{8}'', 0'')$ are 2 sides.

345. [4] The plane B$(-7'', +90°, -30°)$ is the top plane of a refuse bin. A triangular shute runs into the bin perpendicular to plane. If M$(-3'', -1\frac{1}{2}'', -1\frac{1}{2}'')$, N$(-3'', -2'', -\frac{1}{4}'')$ and O$(-3'', -1'', -\frac{1}{4}'')$ are respectively points in the 3 edges of this shute, find the hole to be cut from the plane B.

346. [4] An engineer's draughtsman has assumed plane T$(-7\frac{1}{2}'', +30°, -90°)$ as his vertical plane of projection, upon which he has drawn the projection of a triangle A$(-3\frac{3}{4}'', -\frac{5}{8}'', -\frac{1}{2}'')$ B$(-3'', -1\frac{5}{8}'', -2'')$ C$(-5\frac{1}{4}'', -1'', -1\frac{1}{4}'')$. Find the projections of his projection.

347. [4] The plane T$(-2'', +150°, -150°)$ is a roof plane on a loading shed for cars at a coal mine. A flat belt conveyor is to pass through this roof and perpendicular to it. If A$(-5\frac{3}{8}'', -1'', -\frac{5}{8}'')$ and B$(-6\frac{1}{8}'', -1\frac{1}{2}'', -1\frac{1}{4}'')$ are points

in the two edges of the belt respectively, find the width of hole to be cut in the roof to just allow the conveyor belt to pass through. Let $1'' = 1'$.

348. [2] An inclined mine shaft is to be run perpendicular to a coal vein $C(-7\frac{1}{2}'', +90°, -60°)$. If the points $M(-3'', -\frac{1}{2}'', -2'')$ $N(-3'', -1\frac{3}{4}'', -2'')$ $O(-3'', -\frac{1}{2}'', -\frac{1}{2}'')$ $P(-3'', -1\frac{3}{4}'', -\frac{1}{2}'')$ are the corners of the shaft entrance, find the true shape and size of the intersection of the shaft and the vein, if $1''$ represents $10'$.

## 10.—THROUGH A GIVEN POINT TO PASS A PLANE T, PERPENDICULAR TO A GIVEN RIGHT LINE.

**General. [4]**

349. Point $A(-4\frac{1}{2}'', -1\frac{1}{2}'', -1'')$, line $M(-5\frac{1}{2}'', -2'', -1\frac{1}{2}'')$ $N(-4'', -\frac{1}{2}'', 0'')$.
350. Point $B(-4'', -1'', -\frac{1}{2}'')$, line $O(-5'', +1'', -\frac{1}{4}'')$ $P(-3'', -1\frac{1}{2}'', -1\frac{1}{2}'')$.
351. Point $C(-4'', -\frac{1}{2}'', -\frac{1}{2}'')$ and line $R(-5'', -1\frac{1}{2}'', +\frac{1}{2}'')$ $S(-3'', 0'', +2'')$.

**Line parallel to H or V or both. [4]**

352. Point $A(-4'', +1'', +1'')$ and line $M(-6'', -2'', -\frac{1}{2}'')$ $N(-3'', 0, -\frac{1}{2}'')$.
353. Point $B(-4'', +1'', +\frac{1}{2}'')$ and line $O(-6'', -2'', +\frac{1}{2}'')$ $P(-3'', -2'', -1'')$.
354. Point $C(-4'', -1'', -1\frac{1}{2}'')$ and line $R(-6'', +2'', +1'')$ $S(-3'', +2'', +1'')$.

**Line in plane perpendicular to ground line. [4] P at $-3''$.**

355. Point $A(-1\frac{1}{2}'', -1'', -\frac{1}{2}'')$, line $M(-1'', -\frac{1}{2}'', -\frac{1}{4}'')$ $N(-1'', -1'', -1\frac{1}{2}'')$.
356. Point $B(-2'', -1\frac{1}{2}'', +1'')$ and line $O(0'', -2'', -1'')$ $P(0'', +\frac{1}{2}'', +1\frac{1}{2}'')$.
357. Point $C(0'', -1'', -1\frac{1}{2}'')$ and line $R(0'', -1\frac{1}{2}'', -\frac{1}{2}'')$ $S(0'', -1\frac{1}{2}'', -2'')$.

THROUGH A GIVEN POINT, TO CONSTRUCT A LINE PERPENDICULAR TO A GIVEN LINE. [4]

358. Point $M(-4\frac{1}{2}'', -1\frac{1}{2}'', -1'')$, line $A(-5\frac{1}{2}'', -2'', -1\frac{1}{2}'')$ $B(-4'', -\frac{1}{2}'', 0'')$.
359. Point $N(-4'', +1'', +1'')$ and line $B(-6'', -2'', -\frac{1}{2}'')$ $C(-3'', 0'', -\frac{1}{2}'')$.
360. Point $M(-4\frac{1}{2}'', -1'', -\frac{1}{2}'')$, line $C(-4'', -\frac{1}{2}'', -\frac{1}{4}'')$ $D(-4'', -1'', -1\frac{1}{2}'')$.

### APPLICATIONS.

361. [4] The line $A(-3'', -\frac{3}{8}'', -2\frac{1}{2}'')$ $B(-7'', -2\frac{1}{4}'', -\frac{1}{2}'')$ is the center line of a shaft, upon which a pulley is to be located at a point between A and B, and $1\frac{1}{2}''$ from A. Find the plane of the pulley.

362. [4] $C(-6'', +1\frac{3}{4}'', +\frac{1}{4}'')$ $D(-3'', +1\frac{1}{4}'', +1\frac{1}{2}'')$ is the center line of a water pipe which enters a tank at the point D. If the side of the tank is perpendicular to the water pipe, find its traces.

363. [4] The line $M(-3\frac{1}{4}'', -2\frac{1}{8}'', -2\frac{1}{2}'')$ $N(-5\frac{3}{4}'', -1'', -\frac{7}{8}'')$ is the center line of a square conveyor-casing. Find the projections of the casing, whose section is to the scale of the drawing, a $1\frac{1}{2}''$ square with 2 sides parallel to the H plane.

364. [4] A steam pipe $E(-3\frac{3}{4}'', +\frac{5}{8}'', +1\frac{1}{4}'')$ $F(-7'', +1\frac{3}{4}'', +2\frac{1}{4}'')$ enters a boiler, at the point E, perpendicular to its head B. Find the plane of B.

365. [2] A square $1'' \times 1''$ stick has the line $A(-6'', -\frac{1}{2}'', -\frac{1}{2}'')$ $B(-3'', -4'', -3\frac{1}{2}'')$ as center line. Find the projections of the stick, if 2 of its side faces are perpendicular to H.

366. [4] The plane $R(-5\frac{1}{2}'', -30°, +30°)$ is a roof plane on a country hotel. A tower is to be constructed upon this roof, with one side passing through the line $A(-6'', +2\frac{1}{2}'', +1\frac{1}{2}'')$ $B(-4\frac{1}{2}'', +1\frac{1}{4}'', +1\frac{1}{2}'')$ and perpendicular to the plane R. Find the plane of this side.

367. [2] The plane of one face of a cube is determined by the edge $A(-6'', -1'', -2\frac{1}{2}'')$ $B(-3\frac{1}{4}'', -3\frac{1}{4}'', -\frac{1}{2}'')$ and a point $C(-4\frac{1}{2}'', -1'', 0'')$. Find the plane of the other face of the cube through the edge AB.

368. [4] A mine shaft, driven in line A$(-4\frac{1}{4}'', +1'', +1\frac{3}{4}'')$ B$(-6'', +2'', +\frac{3}{8}'')$ was found to be perpendicular to a coal seam C at the point B. Find the plane C.

369. [4] A telephone wire runs from a point A$(-6'', +1\frac{1}{2}'', +2'')$ in a pole through a roof at a point R$(-3\frac{1}{2}'', +1\frac{1}{2}'', +\frac{3}{4}'')$. If the roof is perpendicular to the wire, find the traces of its plane.

## 11.—TO PASS A PLANE, T, THROUGH A GIVEN POINT PARALLEL TO 2 GIVEN RIGHT LINES. [4]

370. Point M$(-4\frac{1}{2}'', -1'', -\frac{1}{2}'')$ and lines A$(-7'', 0'', -1'')$ B$(-6'', -1\frac{1}{2}'', 0'')$ and C$(-3'', -1\frac{1}{2}'', 0'')$ D$(-1'', -\frac{1}{2}'', +1'')$.

371. Point N$(-4'', -\frac{1}{2}'', -1'')$ and lines D$(-5'', -\frac{1}{2}'', -1'')$ E$(-4'', -1\frac{1}{2}'', -\frac{1}{2}'')$ and F$(-3'', +1'', -\frac{1}{4}'')$ G$(-2'', +1\frac{1}{2}'', +1'')$.

372. Point P$(-5'', +1'', +1'')$, lines G$(-6'', -\frac{1}{2}'', -1\frac{1}{2}'')$ H$(-5'', -1\frac{1}{2}'', -1\frac{1}{2}'')$ and K$(-5'', +\frac{1}{2}'', +\frac{1}{2}'')$ L$(-2'', +\frac{1}{2}'', +\frac{1}{2}'')$.

### TO PASS A PLANE THROUGH ONE LINE PARALLEL TO ANOTHER. [4]

373. Through line A$(-5'', 0'', +1'')$ B$(-4'', -1\frac{1}{2}'', 0'')$ par. to C$(-3'', -1\frac{1}{2}'', 0'')$ D$(-1'', -\frac{1}{2}'', +1'')$.

374. Through line C$(-5'', -\frac{1}{2}'', -1'')$ D$(-4'', -1\frac{1}{2}'', -\frac{1}{2}'')$ parallel to line E$(-3'', +1'', -\frac{1}{4}'')$ F$(-2'', +1\frac{1}{2}'', +1'')$.

375. Through line E$(-6'', -\frac{1}{2}'', -1\frac{1}{2}'')$ F$(-5'', -1\frac{1}{2}'', -1\frac{1}{2}'')$ parallel to G$(-5'', +\frac{1}{2}'', +\frac{1}{2}'')$ H$(-2'', +\frac{1}{2}'', +\frac{1}{2}'')$.

### TO PASS A PLANE THROUGH A GIVEN POINT PARALLEL TO A GIVEN PLANE, AND FIND DISTANCES BETWEEN THE TWO PLANES. [4]

376. Pass plane through point A$(-6'', -1'', -\frac{1}{2}'')$ parallel to plane R$(-3'', +112\frac{1}{2}°, -150°)$.

377. Pass plane through point B$(-5'', -1\frac{1}{2}'', +1\frac{1}{2}'')$ parallel to plane S$(-5\frac{1}{2}'', +90°, +45°)$.

378. Pass plane through point C$(-6'', -\frac{1}{4}'', -2'')$ parallel to plane T$(\infty, -1'', -1\frac{1}{2}'')$.

## APPLICATIONS.

379. [4] The line A$(-35', +23', +5')$ B$(-25', +10', +17')$ and the line BC$(-17', +26', +17')$ are the ridge line and valley line of a cottage roof. The point M$(-45', +20', +17')$ is a point in the ridge line of a parallel roof T on an adjacent cottage. Find the trace of the plane T. Scale, $1'' = 10'$.

380. [4] A new building was designed for a lithograph company with a saw-toothed roof, one roof plane being R$(-7'', -90°, +30°)$. The points M$(-4'', +1\frac{1}{2}'', +\frac{1}{2}'')$ and N$(-2\frac{1}{4}'', +1\frac{1}{2}'', +\frac{1}{2}'')$ are points in the ridges of two other roof planes parallel to R. Find these planes.

381. [2] The line A$(-80', -30', -17')$ B$(-20', -88', -82')$ is the outcrop of a bed of gypsum on a hillside and a vertical bore-hole at point C$(-55', -83', -15')$ showed the same bed at a depth of 20 feet. At a depth of 60 feet at the point C another bed was struck which is surmised to be parallel to the first. Find this plane. Scale, $1'' = 20'$.

382. [2] The line A$(-90', -42', -21')$ B$(-54', -24', -5')$ and the line C$(-90', -24', -12')$ D$(-54', -6', +4')$ determine the inclined roof of a tunnel into a mountain. The point M$(-48', -17', -10')$ is in the floor of the tunnel, which is parallel to the roof. Find the floor plane. Scale, $1'' = 12'$.

383. [2] The line A$(-7\frac{1}{4}'', +3\frac{1}{2}'', +\frac{1}{2}'')$ B$(-5\frac{1}{2}'', +1'', +2\frac{3}{4}'')$ and the line BC$(-3\frac{1}{4}'', +3\frac{1}{2}'', +\frac{1}{2}'')$ are two lines in a gable roof plane. The point M$(-3'', +1\frac{3}{4}'', +1\frac{1}{2}'')$ is a point in another gable plane T parallel to the first. Find the traces of T.

## 12.—TO FIND THE DISTANCE FROM A GIVEN POINT TO A GIVEN RIGHT LINE.

**General.** [4]

384. Point P($-4\frac{1}{2}''$, $-1\frac{1}{2}''$, $-1''$), line A($-5\frac{1}{2}''$, $-2''$, $-1\frac{1}{2}''$) B($-4''$, $-\frac{1}{2}''$, $0''$).
385. Point M($-4''$, $-1''$, $-\frac{1}{2}''$) and line C($-5''$, $+1''$, $-\frac{1}{4}''$) D($-3''$, $-1\frac{1}{2}''$, $-1\frac{1}{2}''$).
386. Point N($-4''$, $-\frac{1}{2}''$, $-\frac{1}{2}''$) and line E($-5''$, $-1\frac{1}{2}''$, $+\frac{1}{2}''$) F($-3''$, $0''$, $+2''$).

**When line is parallel to H or V or both.** [4]

387. Point P($-4''$, $+1''$, $+1''$) and line A($-6''$, $-2''$, $-\frac{1}{2}''$) B($-3''$, $0''$, $-\frac{1}{2}''$).
388. Point M($-4''$, $+1''$, $+\frac{1}{2}''$) and line C($-6''$, $-2''$, $+\frac{1}{2}''$) D($-3''$, $-2''$, $-1''$).
389. Point N($-4''$, $-1''$, $-1\frac{1}{2}''$), line E($-6''$, $-2''$, $+1''$) F($-3\frac{1}{2}''$, $+2''$, $+1''$).

**Where line is in plane perpendicular to G. L.** [4] **P at $-3''$.**

390. Point P($-1\frac{1}{2}''$, $-1''$, $-\frac{1}{2}''$) and line A($-1''$, $-\frac{1}{2}''$, $-\frac{1}{4}''$) B($-1''$, $-1''$, $-1\frac{1}{2}''$).
391. Point M($-2''$, $-1\frac{1}{2}''$, $+1''$) and line C($0''$, $-2''$, $-1''$) D($0''$, $+\frac{1}{2}''$, $+1\frac{1}{2}''$).
392. Point N($0''$, $-1''$, $-1\frac{1}{2}''$) and line E($0''$, $-1\frac{1}{2}''$, $-\frac{1}{2}''$) F($0''$, $-1\frac{1}{2}''$, $-2''$).

TO FIND THE PROJECTIONS OF A LINE THROUGH A GIVEN POINT PERPENDICULAR TO A GIVEN LINE. [4]

393. Point P($-4''$, $-1''$, $-\frac{1}{2}''$), line A($-5''$, $+1''$, $-\frac{1}{4}''$) B($-3''$, $-1\frac{1}{2}''$, $-1\frac{1}{2}''$).
394. Point M($-4''$, $+1''$, $+\frac{1}{2}''$) and line C($-6''$, $-2''$, $+\frac{1}{2}''$) D($-3''$, $-2''$, $-1''$).
395. Point N($-6''$, $-1\frac{1}{2}''$, $+1''$), line E($-4''$, $-2''$, $-1''$) F($-4''$, $+\frac{1}{2}''$, $+1\frac{1}{2}''$).

TO FIND THE DISTANCE BETWEEN TWO PARALLEL LINES. [4]

396. Line A($-6''$, $-1''$, $-1''$) B($-3''$, $+1''$, $0''$) and line parallel to AB through point C($-4''$, $-\frac{1}{2}''$, $+1''$).
397. Lines through points D($-6''$, $-1''$, $+1''$) and E($-4''$, $+1\frac{1}{2}''$, $+\frac{3}{4}''$), parallel to H and making 45° with V.
398. Lines parallel to the ground line, through points G($-5''$, $-\frac{1}{4}''$, $-1\frac{1}{2}''$) and H($-4''$, $-1''$, $-\frac{1}{4}''$).

## APPLICATIONS.

399. [4] The line A($-600'$, $+50'$, $+25'$) B($-340'$, $+200'$, $+190'$) is a telephone wire running from a valley town to a camp on the side of a mountain. A house on the mountain at the point H($-280'$, $+70'$, $+150'$) is to be connected to the line AB by the shortest possible wire. Find the projections and length of the wire. Scale, $1'' = 100'$.

400. [4] For supporting a boom derrick a wire cable is to be run from a point M($-130'$, $+100'$, $+90'$) on its mast to a point X in a beam A($-260'$, $+100'$, $+55'$) B($-160'$, $+15'$, $+55'$). Find the projections and length of the shortest possible cable that can be used. Scale, $1'' = 40'$.

401. [4] In the cottage roof of Fig. 19, find the distance from the point N to the hip rafter AC.

402. [4] In the cottage roof of Fig. 19, find the distance from the point C to the hip rafter AE.

403. [2] In the ventilator cap of Fig. 20, find the distance from the corner O to the lines KM and MN.

404. [2] In the derrick of Fig. 27, find the distance from the mast top D to the boom, also show the projections of a wire running from the post C perpendicular to the guy-wire DB.

405. [2] In the skew bridge of Fig. 28, find the distance from the point M to the diagonal DL; also from the point M to the portal post AC, and from the point C to the portal post BD. Use scale, $1'' = 10'$.

406. [4] The line $A(-5', -2', -\frac{1}{4}')$ $B(-3\frac{1}{2}', -\frac{1}{2}', -1\frac{1}{2}')$ is the center line of a gas pipe. A pipe for a light at the point $L(-6\frac{1}{4}', -\frac{3}{4}', -1\frac{5}{8}')$ is to connect with the first pipe by a right angled elbow. Find the length of the latter, making no allowance for the elbows. Scale, $1'' = 1'$.

407. [4] A soldier at target practice fired in the line $A(-6'', +2'', +1'')$ $B(-3'', +\frac{1}{4}'', +1'')$. By how much did he miss the center $O(-3\frac{5}{8}'', +1'', +\frac{1}{2}'')$ of a target?

408. [4] A mountain railroad takes the direction $M(-1\frac{3}{4}'', +\frac{1}{2}'', 0'')$ $N(-7'', +2\frac{1}{2}'', +1\frac{1}{8}'')$. A hut on the same slope at the point $H(-5\frac{1}{4}'', +\frac{5}{8}'', +\frac{1}{2}'')$ is how far from the railroad? Let $1'' = \frac{1}{2}$ mile.

409. [4] A sewer pipe has the line $B(-37', +18', +7')$ $C(-25', +3', +4')$ as a center line. What is the shortest waste pipe that could be put in from a drain at the point $M(-40', +6', +16'')$? Scale, $\frac{1}{8}'' = 1'-0''$.

410. [4] The line $A(-6'', +2'', +\frac{1}{2}'')$ $B(-3\frac{3}{4}'', +\frac{1}{2}'', +2'')$ is the center line of a diagonal member of a roof truss, to be connected to point $M(-3\frac{3}{4}'', +1\frac{1}{2}'', +2'')$ by a member perpendicular to the first. Find its length.

411. [4] The line $A(-93', +45', +15')$ $B(-60', +10', +15')$ is the center line of a mine shaft. It is proposed to connect with this shaft by a tunnel from a point $M(-100', +15', +5')$ in another shaft. Find the length of the shortest possible tunnel. Scale, $1'' = 20'$.

412. [4] A stroke of lightning was estimated to have taken the line $A(-60', +3', +25')$ $B(-35', +16', +2')$. By how much was an ornament $O(-42', +5', +20')$ on a church spire missed? Scale, $1'' = 10'$.

## 13.—TO FIND THE ANGLE WHICH A GIVEN RIGHT LINE MAKES WITH A GIVEN PLANE.

**General. [4]**

413. Line $A(-5'', -\frac{1}{2}'', 0'')$ $B(-3'', -1\frac{1}{2}'', -2'')$, plane $R(-2'', +150°, -150°)$.
414. Line $C(-6'', -1'', -\frac{1}{2}'')$ $D(-4'', -1'', -2'')$, plane $S(-3'', +112\frac{1}{2}°, -150°)$.
415. Line $E(-4\frac{1}{2}'', +1\frac{1}{2}'', -1'')$ $F(-3'', +\frac{1}{2}'', +1'')$, plane $T(-6'', -30°, -60°)$.

**When plane is perpendicular to H or V or both. [4]**

416. Line $A(-4'', +\frac{1}{2}'', 0'')$ $B(-2\frac{1}{2}'', +2'', +1\frac{1}{2}'')$, plane $R(-6'', +30°, -90°)$.
417. Line $C(-6'', 0'', +1'')$ $D(-3'', -1\frac{1}{2}'', -1\frac{1}{2}'')$, plane $S(-3\frac{1}{2}'', +90°, +45°)$.
418. P at $-3''$. Line $E(-3'', +1'', -\frac{1}{4}'')$ $F(-1'', -\frac{1}{2}'', -1'')$ and plane P.

**When plane is parallel to ground line. [4] P at $-3''$.**

419. Line $A(-3'', -\frac{1}{4}'', -2'')$ $B(-1'', -\frac{1}{4}'', -\frac{1}{2}'')$ and plane $R(\infty, -1'', -2'')$.
420. Line $C(-3'', +1\frac{1}{2}'', -1\frac{1}{2}'')$ $D(-2'', +1'', -\frac{1}{2}'')$, plane $S(\infty, -1\frac{1}{2}'', -\frac{1}{2}'')$.
421. Line $E(-3'', -2'', -1\frac{1}{2}'')$ $F(-\frac{1}{2}'', -\frac{1}{2}'', +\frac{1}{4}'')$ and plane $T(\infty, -1\frac{1}{2}'', \infty)$.

### APPLICATIONS.

422. [2] P at $-3''$. An inclined guide pulley shaft has center line $A(-2', -2\frac{5}{8}', -3\frac{1}{4}')$ $B(-4', -\frac{1}{2}', -1\frac{1}{2}')$. What angle does it make with the floor, (H plane) the front wall (the V plane) and with a roof plane $R(\infty, -2\frac{3}{4}', -1\frac{3}{4}')$. Scale, $1'' = 1'$.

423. [4] Rays of light in the direction A($-6''$, $+\frac{1}{4}''$, $+\frac{3}{8}''$) B($-3\frac{1}{2}''$, $+\frac{3}{4}''$, $+2\frac{1}{4}''$) are reflected from a mirror plane M($-1\frac{3}{4}''$, $+45°$, $-30°$). What is the angle of incidence?

424. [4] A vertical telephone pole stands on a hillside S($-6\frac{1}{2}''$, $-60°$, $+45°$). What angle does the pole make with the plane of the hill?

425. [2] The line A($-6\frac{1}{4}'$, $+2\frac{1}{2}'$, $-\frac{1}{2}'$) B($-1\frac{1}{2}'$, $+4'$, $+2\frac{3}{4}'$) is the center line of a tie rod in a roof truss. What angle does the tie rod make with the floor plane (H plane) and what angle with the roof plane determined by the members M($-7\frac{1}{4}'$, $+5'$, $+1\frac{3}{4}'$) N($-4\frac{1}{4}'$, $+1\frac{3}{8}'$, $+2\frac{3}{4}'$) and NP($-1\frac{1}{2}'$, $+2\frac{1}{2}'$, $-1\frac{1}{4}'$). Scale, $1'' = 1'\ 0''$.

426. [2] In the roof of Fig. 19, find the angle which the valley rafter MN makes with the roof plane U.

427. [2] In the roof of Fig. 19, find the angle which the ridge AB makes with the roof plane T.

428. [2] In the skew bridge of Fig. 28, find the angle that the portal post DB makes with the plane of the diagonals DL and DM; also the angle which the portal brace EI makes with the plane of CD and CN. Use scale, $1'' = 10'$.

429. [2] In the roof of Fig. 29, find (1) the angle which the ridge 8-14 makes with the roof plane S, (2) the angle which the same ridge makes with the plane X. Use scale, $\frac{1}{4}'' = 1'$–$0''$.

430. [4] In Fig. 31, find the angle which the rope AB makes with the south bank plane S.

431. [2] Find the angle which the telegraph wire PW of Fig. 30 makes with the walls A E F B, F B C G, the left end wall of the factory, and the roof.

432. [4] What angle does the tow-rope of Fig. 32 make with the river bank S?

433. [4] What angle does the tow-rope of Fig. 32 make with the floor of the canal boat?

434. [2] In the reducer of Fig. 24, what angle does the edge between planes A and B make with the plane C? Use scale, $1'' = 1'-0''$.

435. [2] Fig. 27 shows a Boom Derrick. Find (1) the angle between the boom FE and the plane determined by the guy wires BD and CD, (2) the angle between the guy-rope BD and the plane determined by the points A, B and C.

## 14.—TO FIND THE ANGLE BETWEEN TWO GIVEN PLANES.

**General. [4]**

436. Planes P($-6''$, $-45°$, $+67\frac{1}{2}°$) and Q($-3''$, $+60°$, $-45°$).
437. Planes R($-6''$, $+67\frac{1}{2}°$, $+120°$) and S($-3''$, $+135°$, $+60°$).
438. Planes T($-6''$, $+67\frac{1}{2}°$, $-30°$) and U($-2''$, $+112\frac{1}{2}°$, $-120°$).

**Including planes perpendicular to H or V, or both. [4]**

439. Planes P($-6''$, $+90°$, $-30°$) and Q($-3\frac{1}{2}''$, $+135°$, $-135°$).
440. Planes R($-5''$, $+90°$, $-30°$) and S($-3''$, $+135°$, $+90°$).
441. Planes T($-6''$, $+30°$, $-22\frac{1}{2}°$) and U($-3''$, $-90°$, $+90°$).

**Including planes parallel to ground line. [4]**

442. Plane P($-6''$, $-45°$, $+45°$) and Q($\infty$, $+2''$, $+1''$).
443. Plane R($\infty$, $-1\frac{1}{2}''$, $-2''$) and S($\infty$, $+1\frac{1}{2}''$, $-1''$).
444. Plane T($-6''$, $+45°$, $-30°$) and U($\infty$, $-1''$, $\infty$).

**When one of planes is a plane of projection. [4]**

445. Plane R($-6''$, $+45°$, $-30°$) and H.
446. Plane S($-6''$, $+67\frac{1}{2}°$, $-60°$) and V.
447. Plane T($-2''$, $+90°$, $-30°$) and P at $-4''$.

ONE TRACE OF A PLANE BEING GIVEN, AND THE ANGLE WHICH THIS PLANE MAKES WITH A PLANE OF PROJECTION, TO FIND THE OTHER TRACE. [4]

448. The H trace of a plane R is given as $(-6'', +30°)$. The plane makes an angle of 45° with H. Find the V trace.

449. The V trace of a plane S is given as $(-6'', +45°)$. The plane makes an angle of 60° with H. Find the H trace.

450. The H trace of a plane T is given as $(\infty, -1\frac{1}{2}'')$. The plane makes an angle of 30° with H. Find the V trace.

## APPLICATIONS.

451. [2] In the cottage of Fig. 19, find the bevel angle of the hip rafter AC, that is, the angle between the planes T and R. Also find the valley angle between the planes R and V.

452. [2] In the cottage of Fig. 19, find the bevel angle of the hip rafter AE, that is, the angle between the roof planes T and U. Also find the bevel angle for the ridge rafter AB.

453. [2] In the skew bridge of Fig. 29, find the angle between the portal plane ABDC and the bridge floor. Also the angle between the portal plane and the plane of one of the trusses of the bridge. Use scale, $1'' = 10'$.

454. [2] In the sheet metal reducer shown in Fig. 24, find the plane angles for corner angle-irons, that is, the angles between the planes A and B, B and C, etc. Use scale, $1'' = 1' - 0''$.

455. [2] In the house of Fig. 29 find the bevel angle for the hip rafter 1-5, that is, the angle between the planes R and S. Also find the valley angle between S and T, and the bevel angle for hip rafter between planes T and X. Use scale, $\frac{1}{8}'' = 1'-0''$.

456. [2] In the house of Fig. 29, find the bevel angle for the hip rafter 11-14, that is, the angle between planes X and W. Find also the bevel angle for the ridge rafter 5-6, and the valley angle between planes S and T. Use scale, $\frac{1}{8}'' = 1' - 0''$.

457. [2] In the ventilator cap shown in Fig. 20, find the angles between the planes D and B, between A and B, between A and the plane of the cap base, between B and the plane of the cap base.

458. [2] In the gondola car body of Fig. 23, find the angles between plates C and D, between A and C, between C and the door plate.

459. [4] The line $A(-6'', +1'', +\frac{3}{8}'')$ $B(-4\frac{1}{2}'', +2\frac{1}{2}'', +2\frac{1}{4}'')$ and a line parallel to AB through the point $C(-4\frac{3}{4}'', +\frac{3}{4}'', +1\frac{1}{4}'')$ are the back edges of a channel iron connected by a bent plate to a plane $T(-3\frac{3}{4}'', -150°, +120°)$. Find the flare angle for the bent plate. See Fig. 41.

460. [4] $A(-6'', +1\frac{1}{2}'', +1\frac{3}{4}'')$ $B(-4\frac{7}{8}'', +1\frac{1}{2}'', +\frac{1}{4}'')$ and a line parallel to AB through $C(-4\frac{3}{4}'', +2'', +1\frac{1}{4}'')$ determine the web plane of an I beam which is riveted by a bent plate connection to a horizontal bed plate. Find the flare angle for the bent plate. See Fig. 40.

461. [2] The top edges of the slope planes of a dry dock form a rectangle 100′ by 60′. These planes slope toward the center at an angle of $67\frac{1}{2}°$ with the horizontal. Find the traces of the planes, their intersection with each other, and their intersection with the bottom of the dry dock, 40′ below the top rectangle. Scale, $1'' = 30'$.

462. [2] The line $A(-70', +35', 0')$ $B(-37', +5', 0')$ is the H trace of a railroad embankment plane whose batir is 1 horizontal to 2 vertical, and whose vertical height is 20 feet. Find the top line of the slope plane, the intersection of

this plane with a hillside H(−48′, −90°, +30°), and the angle between the embankment plane and the hillside. Scale, 1″ = 10′.

463. [2] The line M(−50′, +9′, 0′) N(−17′, +40′, 0′) is the trace on the ground of a wing wall slope plane whose batir is 1 horizontal to 2 vertical. The top line of the wall is parallel to the ground trace and 25 feet above the ground. Find this top line, the intersection of the wing wall plane with the embankment plane T(∞, +30′, +15′) and the angle between wing wall and embankment plane. Scale, 1″ = 10′.

464. [2] A tower roof is to be built in the same general shape and position as shown in Fig. 20, for the ventilator cap. The planes D and B are to have a slope of $1\frac{1}{2}$ vertical to 1 horizontal, while the planes C and A are to have a slope of 2 to 1. Find the projections of the roof and the angles between the planes C and D, and between planes D and B.

## 15.—TO FIND THE SHORTEST DISTANCE, XY, BETWEEN TWO RIGHT LINES NOT IN THE SAME PLANE.

**General. [2]**

465. Lines A(−6″, +2″, +2″) B(−3″, $-1\frac{1}{4}$″, $+1\frac{3}{4}$″) and C(−5″, $+1\frac{1}{4}$″, $+\frac{1}{2}$″) D(−3″, $+\frac{3}{4}$″, $+2\frac{1}{2}$″).

466. Lines E($-5\frac{1}{2}$″, $+2\frac{1}{2}$″, +1″) F($-2\frac{1}{2}$″, +1″, −2″) and G($-5\frac{1}{2}$″, −3″, 0″) H($-2\frac{1}{2}$″, 0″, $+2\frac{1}{2}$″).

467. Lines I(−6″, $-\frac{3}{4}$″, $-1\frac{1}{4}$″) J($-4\frac{1}{2}$″, $+1\frac{1}{2}$″, $-\frac{1}{2}$″) and K($-3\frac{1}{2}$″, $-1\frac{1}{2}$″, $-\frac{1}{4}$″) L($-3\frac{1}{2}$″, $-\frac{3}{4}$″, −1″).

468. Lines M(−6″, $+2\frac{1}{4}$″, $+\frac{1}{4}$″) N($-3\frac{1}{2}$″, $+\frac{1}{4}$″, +1″) and O(−6″, $+\frac{1}{4}$″, $+2\frac{1}{4}$″) P($-3\frac{1}{2}$″, +2″, $+\frac{3}{4}$″).

469. Lines Q($-7\frac{1}{2}$″, +2″, $+4\frac{1}{4}$″) R($-5\frac{1}{2}$″, $+3\frac{1}{2}$″, $+3\frac{1}{4}$″), S($-2\frac{1}{2}$″, $+2\frac{1}{4}$″, +2″) T($-\frac{1}{2}$″, $+\frac{1}{4}$″, $+4\frac{1}{2}$″).

**Including lines parallel to the planes of projection. [2]**

470. Lines A($-5\frac{1}{2}$″, $-\frac{3}{4}$″, $-\frac{1}{4}$″) B($-5\frac{1}{2}$″, $-\frac{3}{4}$″, $-1\frac{1}{4}$″) and C(−4″, $+1\frac{1}{2}$, $-\frac{1}{2}$″) D(−3″, $-\frac{3}{4}$″, −1″).

471. Lines E(−6″, −2″, −2″) F($-5\frac{1}{4}$″, $-\frac{1}{4}$″, $-2\frac{1}{2}$″) and G($-3\frac{1}{4}$″, $-1\frac{1}{2}$″, $-\frac{3}{4}$″) H($-3\frac{1}{4}$″, $-1\frac{1}{2}$″, −3″).

472. Lines J($-6\frac{1}{2}$″, −2″, −2″) K($-2\frac{1}{2}$″, $+2\frac{1}{4}$″, $+\frac{3}{4}$″) and L($-4\frac{3}{4}$″, $+1\frac{3}{4}$″, $+\frac{1}{2}$″) M($-1\frac{1}{2}$″, $+1\frac{3}{4}$″, $+4\frac{1}{2}$″).

### APPLICATIONS.

473. [1] The line C(−23′, +2′, +4′) D(−15′, +7′, +4′) is the center line of a telegraph wire. It is proposed to cross this line with a high tension transmission line whose center line is A(−23′, +8′, +10′) B(−11′, +2′, +2′). If the safe distance between such wires is $1\frac{1}{2}$ feet, is this crossing safe or not, and by how much? Scale, $\frac{1}{2}$″ = 1′ − 0″.

474. [2] The center lines of two gas pipes which are to be joined by means of one straight length of pipe and two right angled elbows are A(−6′, −2′, −2′) B($-5\frac{1}{4}$′, $-\frac{1}{4}$′, $-2\frac{1}{2}$′) and M($-3\frac{1}{4}$′, $-1\frac{1}{2}$′, $-\frac{3}{4}$′) N($-3\frac{1}{4}$′, $-1\frac{1}{2}$′, −3′). Find the shortest possible connection of this sort which can be made, allowing $1\frac{1}{2}$″ at each end for the elbow. Scale, 1″ = 1′ − 0″.

475. [2] The line L($-9\frac{1}{2}$′, −1′, $-3\frac{1}{2}$′) M(−3′, −9′, $-3\frac{1}{2}$′) is the center line of the main shafting in a certain shop. It is proposed to run an electric light wire in the direction J(−13′, +4′, +4′) K(−5′, $-1\frac{1}{2}$′, $-4\frac{1}{2}$′). Find the distance between the two at their closest point. Scale, $\frac{1}{2}$″ = 1′−0″.

## GENERAL PROBLEMS BASED ON POINT, LINE AND PLANE, WITH APPLICATIONS.

480. [2] A $2\frac{1}{2}''$ cube stands upon H in the first quadrant, with one of its faces making $22\frac{1}{2}°$ with V. Find (1) the H and V projections of the cube, (2) the true length of a diagonal, (3) the distance from one corner to the plane of the three adjacent corners.

481. [2] A horizontal trapeze bar $2\frac{1}{2}$ feet long is hung by vertical ropes $4\frac{1}{2}$ feet long attached to its ends. How far would this bar be raised by turning it through 90°? Use scale, $1'' = 1' - 0''$.

482. [1] Locate P at $-5\frac{1}{2}''$, and ground line parallel to shorter edges of sheet. The point $M(-\frac{3}{4}'', +\frac{1}{2}'', +1'')$ is revolved about the line $A(+\frac{1}{2}'', +3\frac{1}{2}'', +4\frac{1}{4}'')$ $B(+3'', +1'', 0'')$. Find (1) the points where this point pierces H, V and P, (2) the H, V and P projections of the point M after 180° revolution from its original position.

483. [1] P at $-7''$. Scale, $\frac{3}{4}'' = 1' - 0''$. Revolve the point $A(-5\frac{1}{2}', -1\frac{1}{4}', -1\frac{1}{2}')$ about the line $B(-4\frac{1}{2}', -5', -5\frac{1}{4}')$ $C(-1', -1', -\frac{1}{2}')$ as an axis and find the points where it pierces H, V and P in this revolution.

484. [1] P at $-7\frac{1}{2}''$. Scale, $1'' = 1' - 0''$. Let H, V and P represent respectively the ceiling and end and side partitons of a factory room. The point A on the rim of a guide pulley revolves about the line BC which is the center line of the pulley shaft. Find the points where this point A pierces H, V and P in the revolution. Also find the projection of A after 30° revolution.
$A(-4'5'', -1'0'', -1'2\frac{1}{2}'')$ $B(-3'1'', -4'0'', -4'2\frac{1}{2}'')$ $C(-0'6'', -1'0'', -0'5'')$.

485. [1] (Ground line parallel to shorter edges and $1\frac{1}{2}''$ below middle of sheet). P at $-5\frac{1}{2}''$. Scale, $\frac{3}{4}'' = 1'-0''$. The three planes H, V and P represent respectively the floor, and two partitions of a power house. The point X, 4′–0″ above the floor, 4′–0″ in front of V, and $2'-5\frac{1}{2}''$ to the right of P, is a point on the circumference of a guide-sheave for a wire rope drive. The center line of the axis of the wheel pierces H 6″ in front of V and 4′–5″ to the right of P and pierces V 1′–0″ below H and $5'-10\frac{1}{2}''$ to the right of P. Find the points where the point X cuts through the floor and partitions as it revolves about the axis. Also find the projections of the point X when it has revolved through an angle of 60°.

486. [1] Scale, $\frac{1}{4}'' = 1'-0''$. The line $A(-48', +16', +8')$ $B(-28', +2', +8')$ is the axis of the shaft of a fly wheel in a power station whose floor and wall are represented by H and V. The point $O(-30', +11', +18')$ is in the center line of the rim of a fly wheel to be located upon the shaft. The width of the fly wheel face parallel to the shaft axis is to be 2′, that is, 1′ on each side of O. Find (1) the radius and projections of the proposed fly wheel, (2) the holes which must be cut from the wall and floor to allow a clearance of 6″ all round the fly wheel for safety.

487. [2] Given the line $M(-6'', +1'', +\frac{1}{2}'')$ $N(-3'', +3'', +2'')$ and the line $A(-7'', +2\frac{1}{2}'', +2\frac{1}{4}'')$ $B(-4'', +4'', -1\frac{1}{4}'')$. Find the projections of AB after it has been revolved about MN as an axis through an angle of 75°.

488. [1] Pass a sphere through the four points $B(-10'', +1\frac{1}{8}'', -\frac{3}{4}'')$ $D(-8\frac{1}{2}'', +3'', +2\frac{1}{4}'')$ $G(-7\frac{1}{2}'', +1\frac{7}{8}'', 0'')$ and $W(-7\frac{1}{2}'', +\frac{3}{8}'', -\frac{3}{4}'')$.

489. [2] Circumscribe a sphere about the triangular pyramid whose vertices are the points $A(-5'', +2\frac{1}{2}'', +2'')$ $B(-6\frac{5}{8}'', +3\frac{3}{8}'', 0'')$ $C(-3\frac{5}{8}'', +3\frac{3}{8}'', 0'')$ and $D(-4\frac{7}{8}'', +1\frac{1}{2}'', 0'')$.

490. [2] The following four points $M(-5'', +2\frac{1}{2}'', +2'')$ $N(-6\frac{5}{8}'', +3\frac{3}{8}'', 0'')$ $O(-3\frac{5}{8}'', +3\frac{3}{8}'', 0'')$ $P(-4\frac{7}{8}'', +1\frac{1}{2}'', 0'')$ are the vertices of a tetahedron. Find the inscribed sphere.

491. [2] The points $A(-7'', -3'', 0'')$ $B(-5'', -\frac{1}{2}'', 0'')$ $C(-2\frac{1}{2}'', -2\frac{1}{2}'', 0'')$ and $D(-4\frac{1}{4}'', -1\frac{3}{4}'', -2\frac{1}{2}'')$ are the vertices of a tetrahedron. Find the inscribed sphere.

492. [2] Let H, V and $T(-2'', -120°, +135°)$ represent respectively the floor, the wall, and the roof plane in a corner of a garret. A perfectly elastic ball is thrown in the direction of the line $A(-7\frac{1}{2}'', +2'', +2'')$ $B(-5'', +2'', +2'')$, strikes the roof plane T, bounds off and strikes the floor H, then bounds off of H and strikes the wall V. Find the 3 points X, Y and Z where it strikes these planes.

493. [2] The plane $T(-6\frac{1}{2}'', -45°, +60°)$ and the planes of projection H and V are three mirrors, from which a ray of light $A(-2\frac{1}{2}'', +2\frac{1}{2}'', +2'')$ $B(-4\frac{1}{2}'', +2\frac{1}{2}'', +\frac{1}{2}'')$ is successively reflected at the points X, Y and Z. Find these points.

494. [2] P at $-2''$. Construct the H and V projections of a cube, in the first quadrant, one of whose faces is in the plane $F(-3\frac{3}{4}'', -30°, +60°)$ with the side $A(-2\frac{1}{4}'', +\frac{3}{4}'', z)$ $B(-\frac{3}{4}'', +1\frac{1}{4}'', z)$.

495. [2] Find the H and V projections of a regular square pyramid whose vertex is at the point $O(-3'', -3\frac{3}{4}'', -2\frac{1}{2}'')$ and whose $1\frac{1}{2}''$ square base is in the plane $T(-2\frac{1}{2}'', +150°, -120°)$.

496. [1] Find the projections of a regular hexagonal pyramid having its base in a plane through $A(-10\frac{1}{4}'', +1\frac{3}{4}'', +2\frac{3}{4}'')$ and par. to lines $B(-12'', +4\frac{3}{4}'', +4'')$ $C(-6\frac{1}{4}'', +\frac{3}{4}'', +2\frac{1}{4}'')$ and $D(-9\frac{3}{4}'', +\frac{1}{2}'', +4\frac{3}{4}'')$ $E(-6\frac{3}{4}'', +4'', +\frac{1}{2}'')$. One side of the base lies in the line of intersection of the plane of the base and a plane through A perpendicular to line BC. Vertex of the pyramid at point $O(-5'', +4\frac{1}{2}'', +5\frac{1}{8}'')$.

497. [2] Construct a line XY, parallel to the plane $T(-6\frac{1}{2}'', -30°, +60°)$ and $1''$ therefrom, which cuts the lines $M(-6'', +2\frac{1}{4}'', +2\frac{3}{4}'')$ $N(-4\frac{1}{2}'', +1'', +\frac{1}{4}'')$ and $O(-4'', +1\frac{3}{4}'', +2\frac{1}{2}'')$ $P(-1\frac{3}{8}'', +1\frac{3}{4}'', +\frac{1}{4}'')$.

498. [2] Given the points $A(-6'', +1'', 0'')$ $B(-3\frac{3}{8}'', +\frac{1}{4}'', 0'')$ and $C(-2\frac{1}{4}'', +3\frac{1}{4}'', 0'')$ as the vertices in H of the base of a triangular pyramid. whose vertex is at a point F, such that the lateral edges AF, BF, and CF are $4\frac{1}{2}''$, $4\frac{1}{4}''$ and $4''$ in length respectively. Find the H and V projections of the pyramid.

499. [2] Scale, $1'' = 50'$. Vertical drill holes at points $A(-260', +60', +180')$ $B(-310', +175', +110')$ and $C(-200', +55', +110')$ of a hillside strike an ore vein at depths of $170'$, $210'$ and $70'$ respectively. Find the line of outcrop of the vein, that is, the intersection of the ore plane with the plane of the hillside.

500. [2] Find a line XY which touches the three lines $A(-6'', -\frac{1}{2}'', -2\frac{1}{2}'')$ $B(-5'', -2'', -\frac{1}{4}'')$, $C(-4\frac{1}{2}'', -3'', -2\frac{1}{2}'')$ $D(-3\frac{1}{2}'', -\frac{1}{4}'', -\frac{1}{4}'')$, and $E(-3'', -1\frac{1}{4}'', -\frac{1}{4}'')$ $F(-1'', -3'', -3'')$.

501. [2] Through the point $O(-4\frac{1}{2}'', -1\frac{1}{2}'', -1\frac{1}{4}'')$ pass a line parallel to planes $T(-6\frac{1}{2}'', +30°, -50°)$ and $S(-1'', +115°, -140°)$.

502. [4] P at $-\frac{1}{2}''$. The vertical line $A(-5\frac{1}{2}'', +1\frac{1}{4}'', +2'')$ $B(-5\frac{1}{2}'', +1\frac{1}{4}'', 0'')$ is a body diagonal of a cube in the first quadrant with its lowest corner on H at the point B. Find the three projections of such a cube.

503. [2] Through the point $M(-6\frac{1}{2}'', -\frac{1}{2}'', -1\frac{1}{4}'')$ construct the line MXY touching the lines $P(-6'', -2'', -3'')$ $Q(-5'', -\frac{1}{4}'', -\frac{1}{2}'')$ and $R(-4'', -\frac{7}{8}'', -3'')$ $S(-2'', -3'', -\frac{3}{8}'')$.

504. [2] Through the point $G(-5\frac{3}{4}'', -\frac{7}{8}'', -1\frac{7}{8}'')$ construct a line GXY touching the lines $M(-4\frac{1}{2}'', -3'', -2\frac{1}{2}'')$ $N(-3\frac{1}{2}'', -\frac{1}{4}'', -\frac{1}{4}'')$ and $O(-3'', -1\frac{1}{4}'', -\frac{1}{4}'')$ $P(-1'', -3'', -3'')$.

505. [2] Through the line $M(-4\frac{3}{4}'', -2\frac{1}{2}'', z)$ $N(-2'', -\frac{1}{2}'', z)$ in the plane $R(-7\frac{1}{4}'', +45°, -30°)$ pass a plane T making an angle of 30° with R.

506. [2] Through the line O($-6''$, y, $-\frac{1}{2}''$) P($-2\frac{3}{4}''$, y, $+3\frac{1}{2}''$) in the plane S($-\frac{1}{2}''$, $-150°$, $+120°$) pass a plane U making an angle of 45° with S.

507. [2] Find line CD, parallel to A($-6\frac{3}{4}''$, $-\frac{1}{4}''$, $-\frac{1}{2}''$) B($-5\frac{3}{4}''$, $-\frac{7}{8}''$, $-2\frac{7}{8}''$) and intersecting the line M($-6\frac{1}{2}''$, $-2''$, $-3''$) N($-5\frac{1}{2}''$, $-\frac{1}{4}''$, $-\frac{1}{2}''$) and the line P($-4\frac{1}{2}''$, $-\frac{7}{8}''$, $-2\frac{7}{8}''$) Q($-2\frac{1}{2}''$, $-3''$, $-\frac{3}{8}''$).

508. [2] Find a plane R which bisects the dihedral angle between planes S($-1\frac{1}{2}''$, $-60°$, $+30°$) and T($-7\frac{3}{4}''$, $+40°$, $-45°$). .

509. [2] Find the point K in line A($-1\frac{1}{2}''$, $+1\frac{7}{8}''$, $+3\frac{1}{4}''$) B($-6\frac{1}{4}''$, $+\frac{7}{8}''$, $+\frac{1}{2}''$) which is equidistant from planes S($-7''$, $-60°$, $+30°$) and T($-\frac{3}{4}''$, $+45°$, $-60°$).

510. [2] Through point O($-4''$, $+3''$, $+2\frac{1}{2}''$) pass a plane T making an angle of 60° with H and $67\frac{1}{2}°$ with V.

511. [1] Construct the projections of four spheres of radii $1\frac{1}{2}''$, $2''$, $2\frac{1}{4}''$ and $1''$ respectively, so located that each sphere is tangent to the other three.

512. [2] Given two points O($-1\frac{1}{2}''$, $-2\frac{1}{4}''$, $-\frac{3}{4}''$) and K($-2\frac{3}{8}''$, $-\frac{1}{4}''$, $-2\frac{1}{4}''$) and a mirror plane M($-7\frac{1}{2}''$, $+30°$, $-45°$). Find the projections of a ray of light which emanates from O and after being reflected from M passes through the point K.

513. [2] If the direction of rays of light is given parallel to the line L($-6\frac{1}{4}''$, $+2''$, $+2\frac{1}{2}''$) M($-4''$, $+\frac{5}{8}''$, $+\frac{1}{4}''$) find the shadow cast upon the horizontal plane of projection by a certain triangle A($-6\frac{1}{2}''$, $+4\frac{1}{4}''$, $+\frac{3}{4}''$) B($-4''$, $+2\frac{3}{8}''$, $+3\frac{1}{8}''$) C($-4\frac{1}{4}''$, $+5\frac{1}{4}''$, $+1''$).

514. [2] A ray of light passes through the points A($-1\frac{1}{2}''$, $+4\frac{3}{4}''$, $+3\frac{1}{2}''$) and B($-3\frac{3}{4}''$, $+1\frac{3}{4}''$, $+2''$) and is reflected from a mirror M($-\frac{3}{4}''$, $+60°$, $-45°$). Find the projections of the incident and reflected rays, and the angle of incidence.

515. [1] P at $-8''$. The top of an inclined draughting table is a rectangle, with three corners at the points A($-7\frac{1}{2}''$, $-1''$, $-4\frac{3}{4}''$) B($-7\frac{1}{2}''$, $-5''$, $-3\frac{1}{2}''$) C($-2''$, $-5''$, $-3\frac{1}{2}''$). An electric light at the point L($-4\frac{3}{4}''$, $-3\frac{3}{8}''$, $-1''$) is guaranteed to light satisfactorily at this distance within a cone of maximum intensity rays, whose elements make an angle of 30° with the vertical. Find the three projections of sixteen of these rays and then approximately the curve bounding that portion of the table within the cone of maximum intensity.

516. [2] Two pulleys are located with their pitch circles in the same plane T($-12'$, $-45°$, $+60°$) and are $2'$ and $3'$ in diameter respectively. The face of each pulley is $12''$, their shafts are $6'$ apart, and they are connected by an open belt $9''$ wide. Find projections of pulleys and belt, and length of the latter, making no allowance for slack. Scale, $\frac{1}{2}'' = 1'-0''$.

517. [1] Scale, $\frac{1}{2}'' = 1'-0''$. Two pulleys of $3'$ diameter are located at points A of shaft A($-24'$, $-6'$, $-1\frac{1}{2}'$) B($-24'$, $-6'$, $-6'$) and C of C($-8'$, $-1\frac{1}{2}'$, $-7\frac{1}{2}'$) D($-8'$, $-6'$, $-7\frac{1}{2}'$). They are to be connected by a belt running over two guide pulleys of $3'$diameter, so located that the belt will be as short as possible and will run in either direction. Find its length and center line projections, also the pitch line projections of the guide pulleys. (Hint. A belt must always be delivered in the plane of the pulley toward which it is running. See Fig. 33.)

518. [1] G. L. par. to short edges of sheet. Scale, $\frac{1}{2}'' = 1'-0''$. Assuming the point D as per dimensions in Fig. 33, find the projections of the main and guide pulleys and belt, assuming all pulley faces to be $9''$, width of belt $6''$, shaft diameters $4''$. (See hint in problem above.)

519. [1] G. L. par. to short edges of sheet. Scale, $\frac{1}{2}'' = 1'-0''$. In Fig. 33, locate a guide pulley as indicated, but in such a position as to give the shortest possible belt. Show only pitch line of guide pulley and of belt. Find length of belt.

520. [1] Scale, $\frac{1}{2}'' = 1'-0''$. Find the projections of two pulleys, diameters 3′ and 4′, to be located at points A and B respectively of shafts A(−25′, −4½′, −3′) C(−22′, −1½′, −1′) and B(−11½′, −7½′, −4′) D(−13½′, −5½′, −½′), and to be connected by a belt running over two guide pulleys of 2½′ diameter, so located that the belt will be the shortest possible and run in either direction. (Hint: A belt must always be delivered in the plane of the pulley toward which it is running.)

521. [1] On a certain set of plans, the projections of a ventilator cap are as shown in Fig. 20. Find (a) the angle between planes D and B, that is, the flare angle for the ridge angle-iron, (b) the angle between planes A and B, that is, the flare angle for the hip angle irons, (c) the angle which the ridge makes with the plane A, (d) the angle which the planes D and C make with a horizontal plane through the base of the cap, (e) the pattern (true size and shape) for the cap, allowing 3″ for lap where necessary.

522. [2] Fig. 21 represents in outline the projections of a lamp shade. Find the following values, which would be used in its construction: (1) Angle between planes A and B, (2) angle which planes A and B make with a horizontal plane through the base of the shade, (3) angle which planes A and B make with a vertical plane through the edge FG, (4) angle which edges, as EF, make with the top T, (5) angle which edge EF makes with the base edge FG, (6) size of glass planes, allowing ⅜″ inside of extreme edges as EF and FG.

523. [1] Scale, $\frac{3}{4}'' = 1'-0''$. The sketch in Fig. 22 is a steel tank for an elevator boot, the plates to be bent and riveted as shown. Dimensions of open top are 5′–0″ by 3′–0″, of bottom plate without laps 3′–0″ by 18″. Height of boot is 2′–0″. Find (1) angle between side and end plates, (2) angle between side and bottom plates, (3) angle between end and bottom plates, (4) angle which edge between side and end makes with bottom plate, (5) dimensioned pattern for all plates, allowing laps of 3″ for riveting as shown.

524. [1] Scale, $\frac{1}{2}'' = 1'-0''$. The steel plate body of a Gondola car is shown in Fig. 23. Show the 3 views of the car and find the plate dimensions, lengths and angles, as follows:

Plate A = ..... × ..... Plate B = ..... × .....
Plate C = ..... × ..... and ..... Plate D = ..... × ..... and .....
Door Plate = ..... × ..... Angle between A and C = ..... ° .....′.
Angle bet. B and D = ..... ° .....′. Angle bet. C and D = ..... ° .....′.
Length of intersection between C and D = .....

525. [1] In the sheet metal reducer shown in Fig. 24, find the following: (a) angle between planes A and B, and between planes B and C, (b) angles between planes A and G, and B and F, (c) pattern for transition section of the reducer, dimensioning same in full.

526. [1] Scale, $1\frac{1}{2}'' = 1'-0''$. The plan and elevation of a metal ash shute are given in Fig. 25, the dimensions locating all lines except MN and NO which are to be found. Lay out and dimension the top plate A, bottom plate C, and one side plate B of the transition connection. Also find the following angles: (1) Angle between A and B, (2) angle between F and E, (3) angle between B and G.

527. [1] Scale, 1″ = 1′–0″. A stone flat arch over a window is shown in Fig. 26. Find the angles between the various faces of the keystone K, and develop this stone, showing dimensions in full.

528. [1] Scale, 1″ = 1′–0″. In the flat window arch of Fig. 26, find the angle between the various faces of stone E and develop this stone, showing dimensions in full.

NOTE.—Figure 29 shows in plan and elevation, a hip and valley roof, whose solution may be taken as typical of the work necessary in the design of structural steel roofs. The following are the important angles: (1) the angles which planes as R, S, X, etc., make with a horizontal plane, (2) the angles which the lines 2-1, 10-11, etc., make with vertical hip-web planes through the hips 1-5, 11-14, etc. respectively, (3) the angles which the hip or valley rafters, as 10-14, 2-5, and 7-8 make with a horizontal plane, (4) the angles in a roof plane which the main rafters 5-6 and 8-14, etc. make with the hip or valley rafters 1-5, 7-8, etc., respectively, (5) the angles between a vertical line and the trace of a purlin web upon the hip web plane (the purlins have their web planes perpendicular to the roof plane, as indicated in figure—the line AB then would be the trace of a purlin-web plane on the roof plane R—the hip-web plane is a vertical plane through the hip), (6) the angle between the roof plane and the back of hip, (7) angle in the purlin-web between a normal to the center line of the purlin and the trace of the hip web on the purlin-web, (8) angle between purlin-web and hip-web, (9) angle in back of hip between a line normal to the hip web and the trace of the purlin-web on back of hip, (10) angle between traces of hip-web and back of hip, (11) angle between back of hip and purlin-web.

529. [2] Scale, $\frac{1}{8}'' = 1'-0''$. Find the above angles for the plane R in Fig. 29.

530. [2] Scale, $\frac{1}{8}'' = 1'-0''$. Find the above angles for the plane S in Fig. 29.

531. [2] Scale, $\frac{1}{8}'' = 1'-0''$. Find the above angles for the plane T in Fig. 29.

532. [2] Scale, $\frac{1}{8}'' = 1'-0''$. Find the above angles for the plane X in Fig. 29.

533. [1] A carpenter's saw-horse is constructed as shown in Fig. 36. Find the correct projections of two legs as shown, then detail one of the legs, showing all angles which would be used in cutting. Use scale, $3'' = 1'-0''$.

534. [1] Fig. 37 shows the center line of a $4'' \times 4''$ brace to be run between two $5'' \times 5''$ beams, so that its top and bottom faces are perpendicular to V. Find the projections of this brace, showing its intersection lines with each of the beams and then detailing said brace, showing all angles which would be used in cutting it. Use scale, $\frac{1}{4}'' = 1''$.

535. [1] Fig. 37 shows the center line of a $4'' \times 4''$ brace to be run between two $5'' \times 5''$ beams, so that its two side faces are perpendicular to H. Find the projections of this brace showing its intersection lines with each of the beams, and then detailing said brace, showing all angles which would be used in cutting it. Use scale, $\frac{1}{4}'' = 1''$.

536. [2] Construct the projections of a jack rafter B as shown in Fig. 38, showing in detail its intersections with the hip and valley rafters. Then find the angles which would be used in marking these rafters for cutting.

537. [2] Construct the projections of a house rafter A as shown in Fig. 39, showing in detail its intersection with the ridge rafter and the plate. Then find the angles which would be used in marking these rafters for cutting.

538. [1] Construct in detail the 3 projections of the auditorium floor joist A shown in Fig. 42, finding the angles which would be used in marking out ready for cutting.

539. [1] Construct in detail the 3 projections of the Auditoirum floor joist B shown in Fig. 43, then detail the piece showing all angles which would be used in marking out ready for cutting.

540. [2] Assuming the base lines in H for the face planes of a bridge pier as indicated in Fig. 44 and the respective batirs for said faces, find the projections of the pier.

541. [2] The line $B(-6'', +2'', 0'')$ $A(-2\frac{1}{4}'', +\frac{1}{2}'', +4\frac{1}{2}'')$ and a point $M(-3'', +3'', +2'')$ determine the plane of the back of a channel iron used on a hoist boom, the channel dimensions to the scale of the drawing being $W = 1\frac{1}{8}''$, $F = \frac{3}{8}''$, as in Fig. 41. Find (1) a point C in the opposite edge of the channel back, (2) the projections of the intersection of the channel iron with a horizontal base plate, (3) the angle for a bent plate connection between the channel back and the base plate as shown. Then detail the bent plate, allowing $\frac{1}{8}''$ clearance all around.

542. [2] The line B($-3''$, $+3\frac{1}{4}''$, $0''$) A($-5''$, $+2\frac{3}{4}''$, $+2\frac{3}{4}''$) and a point M($-2\frac{3}{4}''$, $+1''$, $+3''$) determine the plane of the web of an inclined I-beam connection in a steel structure, the beam dimensions to the scale of the drawing being W = $1\frac{1}{8}''$, F = $\frac{1}{2}''$, as in Fig. 40. Find (1) a point C in the opposite edge of the back of the I-beam, (2) the projections of the I-beam, (3) its intersection with a horizontal base plate. Then detail a bent plate connection for the same, allowing $\frac{1}{8}''$ clearance all round, and find the angle at which it is to be bent.

543. [1] A square butt-jointed hopper has dimensions as shown in Fig. 71. Find all the bevel angles necessary for its construction, and in a separate figure show detailed views of one side of the hopper, giving angles and lengths.

544. [1] Fig. 95 shows a tin furnace pipe transition piece. Find the angles which its various sides make with each other and with the sides of the vertical pipes connected. Then develop the transition piece, dimensioning in full.

545. [2] Draw the projections of the cottage of Fig. 19, and, assuming that rays of light are parallel to the line R($-2''$, $+1\frac{1}{2}''$, $+1\frac{1}{2}''$) L($-1''$, $+\frac{1}{2}''$, $+\frac{1}{2}''$), find the shadow which the cottage casts on the ground, also the shadow which the gable casts on the roof. Use scale, $1'' = 10'$.

546. [4] A $1\frac{1}{4}''$ cube stands in the 1st quadrant on H, with the edges of its base oblique to the ground line. If line R($-2''$, $+1\frac{1}{2}''$, $+1\frac{1}{2}''$) L($-1''$, $+\frac{1}{2}''$, $+\frac{1}{2}''$) gives the direction of rays of light, find its shadow upon H.

547. [2] A regular pyramid (base $1''$ square) is located in the 3rd quadrant, with its vertex $\frac{1}{2}''$ below H and its base in a plane parallel to H and $3\frac{1}{2}''$ below H. If the line R($-2''$, $+1\frac{1}{2}''$, $+1\frac{1}{2}''$) L($-1''$, $+\frac{1}{2}''$, $+\frac{1}{2}''$) gives the direction of rays of light, find the shadow of the pyramid on the plane of its base.

548. [2] Find the shadow cast by the pyramid of Problem 303 upon a horizontal plane $1''$ below H. The line R($-2''$, $+1\frac{1}{2}''$, $+1\frac{1}{2}''$) L($-1''$, $+\frac{1}{2}''$, $+\frac{1}{2}''$) gives the direction of light rays.

549. [2] Find the shadow cast by the pyramid of Prob. 730 upon the plane T there given, also the shadow upon H. Direction of light rays is given by line R($-2''$, $+1\frac{1}{2}''$, $+1\frac{1}{2}''$) L($-1''$, $+\frac{1}{2}''$, $+\frac{1}{2}''$).

550. [1] The point O($-10''$, $+4\frac{1}{2}''$, $+3\frac{1}{2}''$) is the vertex of an oblique cone, and the point M($-13\frac{1}{4}''$, $+2''$, $0''$) the center of its circular base of $2\frac{1}{2}''$ diameter in H. Find its shadow upon H and the plane T($-9''$, $-112\frac{1}{2}°$, $+30°$) if light rays are parallel to the line R($-2''$, $+1\frac{1}{2}''$, $+1\frac{1}{2}''$) L($-1''$, $+\frac{1}{2}''$, $+\frac{1}{2}''$).

551. [2] An oak block, cut $2\frac{1}{2}''$ square and $\frac{3}{4}''$ deep, lies upon H in the 1st quadrant, with its vertical faces at 60° and 30° with V respectively. On top of this block, is a regular pyramid, altitude $2\frac{1}{2}''$, base $1\frac{1}{4}''$ square, center of base at center of block. If the line R($-2''$, $+1\frac{1}{2}''$, $+1\frac{1}{2}''$) L($-1''$, $+\frac{1}{2}''$, $+\frac{1}{2}''$) gives the direction of rays of light, find the shadow of these objects upon H and upon each other.

552. [1] P at $-6''$. Assuming that rays of light are parallel to a line R($-2''$, $+1\frac{1}{2}''$, $+1\frac{1}{2}''$) L($-1''$, $+\frac{1}{2}''$, $+\frac{1}{2}''$), find the shadow of the Boom Derrick and guy ropes of Fig. 27 upon the horizontal plane.

553. [2] A $2''$ cube stands on H with two of its vertical sides making 60° and 30° with V respectively. On top of this cube is a block $3''$ square and $\frac{1}{2}''$ deep, with its center above that of the cube and with its edges parallel to the cube edges. If light rays are parallel to line R($-2''$, $+1\frac{1}{2}''$, $+1\frac{1}{2}''$) L($-1''$, $+\frac{1}{2}''$, $+\frac{1}{2}''$), find the shadow of these objects upon H and upon each other.

## BUILDING UP SOLIDS, CONDITIONS GIVEN.

**Pyramids.**

559. [1] Find the H and V projections of a regular triangular (or square or hexagonal) pyramid whose vertex is at the point V($-5\frac{3}{4}''$, $+4\frac{3}{4}''$, $+5\frac{3}{8}''$) and whose base is in a plane T passed through the point O($-10\frac{1}{4}''$, $+1\frac{3}{4}''$, $+2\frac{3}{4}''$) parallel to K($-12''$, $+4\frac{3}{4}''$, $+4''$) L($-6\frac{1}{4}''$, $+\frac{3}{4}''$, $+2\frac{1}{4}''$) and M($-9\frac{3}{4}''$, $+\frac{1}{2}''$, $+4\frac{3}{4}''$) N($-6\frac{3}{4}''$, $+4''$, $+\frac{1}{2}''$), one side of the base being the line of intersection of said plane T with a plane passed through the point O perpendicular to the line KL.

560. [1] P at $-7\frac{1}{2}''$. Construct the 3 projections of a regular square pyramid whose vertex is at the point V($-1\frac{5}{8}''$, $-5\frac{1}{4}''$, $-4\frac{3}{4}''$) and whose base, in a plane T passing through point A($-6''$, $-2\frac{3}{4}''$, $-1\frac{3}{4}''$) par. to the lines B($-7\frac{3}{4}''$, $-4''$, $-4\frac{3}{4}''$) C($-2''$, $-2\frac{1}{4}''$, $-\frac{3}{4}''$) and D($-5\frac{5}{8}''$, $-4\frac{3}{4}''$, $-\frac{1}{2}''$) E($-2\frac{5}{8}''$, $-\frac{1}{2}''$, $-4''$), has as one side the line of intersection between the said base plane and a plane passing through A perpendicular to the line BC.

561. [1] Find the H and V projections of a regular triangular pyramid whose vertex is at the point V($-5\frac{3}{4}''$, $+4\frac{3}{4}''$, $+5\frac{3}{8}''$) and whose equilateral base is in a plane T passed through the point O($-10\frac{1}{4}''$, $+1\frac{3}{4}''$, $+2\frac{3}{4}''$) parallel to the line K($-12''$, $+4\frac{3}{4}''$, $+4''$) L($-6\frac{1}{4}''$, $+\frac{3}{4}''$, $+2\frac{1}{4}''$) and the line M($-9\frac{3}{4}''$, $+\frac{1}{2}''$, $+4\frac{3}{4}''$) N($-6\frac{3}{4}''$, $+4''$, $+\frac{1}{2}''$), one side of the base being the line of intersection of said plane T with a plane passed through the point O perpendicular to the H trace of the plane T.

562. [1] P at $-8''$. A regular hexagonal pyramid, altitude $5''$ has its base in the plane B($-8''$, $+60°$, $-60°$) with its center at the point O($-4\frac{1}{2}''$, $-3''$, z). Each side of the base is $2''$ in length and its lowest side makes an angle of $45°$ with the V trace of the plane B. Construct the H, V and P projections of the pyramid.

563. [1] A regular hexagonal pyramid has vertex at point A($-11\frac{1}{2}''$, $+5''$, $+5''$) and its base in the plane B($-8\frac{1}{2}''$, $-135°$, $+150°$). The diameter of the circle which circumscribes its hexagonal base is $3''$ and two sides of said base are parallel to the H trace of plane B. Find the H and V projections of the pyramid, its altitude, and its pattern, including the base.

564. [1] P at $-7\frac{1}{2}''$. A regular pyramid with a $1\frac{1}{2}''$ square base and $3\frac{1}{2}''$ altitude is located in the third quadrant. The square base is in the plane T($-2\frac{1}{2}''$, $+150°$, $-120°$), with two sides parallel to the V trace and with its center at a point O whose vertical projection is at the point ($-5''$, $0''$, $-1\frac{1}{2}''$). Find the H, V and P projections of the pyramid, showing visible and invisible edges.

565. [1] P at $-8''$. Find the 3 projections of a regular square pyramid whose vertex is at the point K($-1\frac{7}{8}''$, $-1\frac{3}{4}''$, $-\frac{1}{8}''$) and whose square base in the plane T($-6''$, $+60°$, $-45°$) is inscribed in a circle of $3''$ diameter with center at O($-3\frac{1}{8}''$, $-2\frac{1}{2}''$, z), with two of its sides parallel to the H trace of plane T.

566. [1] P at $-6''$. Scale, $\frac{3}{16}'' = 1'-0''$. The lines A($-35'$, $-18'$, $-5'$) D($-18'$, $-27'$, $-5'$), a line parallel to AD through B($-25'$, $-2\frac{1}{2}'$, $-20'$), and AB are respectively the ridge, eave and front rafter lines of a cottage roof. A tower with a pyramidal roof is to be built thereon, the base of the tower on the roof to be an $8'-0''$ square, whose sides are respectively parallel to the lines AB and BC and whose center is at distances $14'-3''$ and $12'-0''$ respectively therefrom. The top of the pyramidal roof is to be $12'-6''$ directly above this center, and the 4 vertical walls of the tower rise to a horizontal plane $7'-6''$ above the center of the square in the roof. The four corner tower rafters are to be $9'-0''$ in length. Find the 3 projections of the roof and tower theron, the distance of the top of the tower from the plane of the roof and the angle which the corner tower rafters make with each other.

**Cones.**

567. [2] Construct the H and V projections of a right circular cone whose base of $1\frac{1}{2}''$ diameter is in the plane $T(-5\frac{1}{2}'', -60°, +30°)$ with center at the point $O(-3\frac{3}{4}'', +1\frac{3}{8}'', z)$. Altitude of cone is $3''$.

568. [2] The point $A(-6'', -4\frac{1}{2}'', -5'')$ is the vertex of a cone of revolution whose axis is perpendicular to, and whose base of $2\frac{1}{2}''$ diameter is in, the plane $T(-6'', +45°, -45°)$. Find the H and V projections of this cone. What is its altitude?

569. [1] P at $-7\frac{1}{2}''$. A cone of revolution with a base of $2''$ diameter and $3\frac{1}{2}''$ altitude is located in the 3rd quad. Its base is in plane $T(-2\frac{1}{2}'', +150°, -120°)$ with its center at the point $O(-5'', y, -1\frac{1}{2}'')$. Find the 3 projections of this cone.

**Prisms.**

570. [1] P at $-8\frac{1}{2}''$. Construct the 3 projections of a regular hexagonal prism in the 3rd quadrant $3\frac{1}{2}''$ high, the plane of whose base makes an angle of 30° with V and 75° with H. Each side of the base is $1''$ long and two edges are parallel to V. The center of the base is $4''$ to left of P, $\frac{3}{4}''$ behind V and $1\frac{1}{2}''$ below H.

571. [1] P at $-2''$. Construct the H, V and P projections of a regular square prism in the 1st quadrant, altitude $3\frac{1}{2}''$, each side of base $1\frac{3}{4}''$, center of base at point $C(-9\frac{1}{2}'', +1\frac{1}{2}'', +\frac{3}{4}'')$. Plane of base makes an angle of 30° with H and 75° with V, two edges of base being parallel to H.

572. [1] P at $-8\frac{1}{2}''$. A regular hexagonal prism in the third quadrant, of $2''$ altitude, one hexagonal base in the plane $T(-4\frac{1}{2}'', +45°, -60°)$, with center at point $O(-2'', -1\frac{1}{2}'', z'')$ and each side $1\frac{1}{8}''$, is hollowed out by a right circular cylinder of $1\frac{1}{4}''$ diameter whose axis coincides with that of the prism. Construct the H, V, and P projections of the hollow prism.

**Cubes.**

573. [1] P at $-3''$. A $2''$ cube stands on the plane $T(-8'', -30°, +60°)$ in the first quadrant. The center of its base when revolved into H about the H trace of plane T is at $O(-7\frac{1}{4}'', +2\frac{1}{2}'', 0'')$ and two of the sides of the base make angles of 36° with this trace. Find the 3 projections of the cube.

574. [1] G. L. par. to short edge of sheet. P at $-5\frac{1}{4}''$. A cube in the third quadrant has its upper face in the plane $T(-4\frac{1}{2}'', +60°, -45°)$, one side of this face being the line $A(-2\frac{1}{2}'', y'', -1\frac{3}{4}'')$ $B(-\frac{1}{2}'', y'', -3\frac{3}{8}'')$ in the plane T. Find the 3 projections of this cube.

575. [1] The points $A(-11'', +\frac{1}{2}'', 0'')$, $B(-8'', +\frac{1}{2}'', 0'')$, $C(-8'', +3\frac{1}{2}'', 0'')$ are three vertices of the base of a cube standing in the 1st quadrant on H. Revolve the cube about the H trace of the plane $T(-12\frac{1}{2}'', -45°, +30°)$ until it stands on T, showing its H and V projections in this position.

576. [1] G. L. par. to short edge of sheet. A $3''$ cube stands in the first quadrant with one of its diagonals perpendicular to H, and another parallel to V. Find the projections of the cube, and the distance from one vertex to the plane of the 3 adjacent vertices.

## REPRESENTATION OF SURFACES.

### HELICAL CONVOLUTES.

**Assume elements; intersection with H or oblique plane; assume points on surface.**

578. [2] A Helical Convolute is formed by drawing tangents to a helix of 3″ pitch in the first quadrant whose axis is perpendicular to H through the point O($-6\frac{1}{4}''$, $+1\frac{1}{2}''$, 0″) and whose generating point starts at pt. M($-7\frac{1}{4}''$, $+1\frac{1}{2}''$, 0″) moving so its H projection appears to rotate counter-clockwise. Find 16 elements in the first convolution of the surface, the line in which the surface thus determined cuts H, and the projections of a point K of the surface not on one of the above elements.

579. [1] G. L. par. to short edges of sheet. A Helical Convolute has as its directrix a helix whose axis is M($-7\frac{1}{2}''$, $+2''$, 0″) N($-7\frac{1}{2}''$, $+2''$, $+5''$), whose pitch is 12″, whose generating point starts at K($-9''$, $+2''$, 0″) and moves so that its H projection appears to rotate counter-clockwise. Find the intersection, (between H and the point where the helical directrix pierces T), of the helical convolute and a plane T($-1\frac{1}{2}''$, $-120°$, $+150°$).

### HYPERBOLIC PARABOLOIDS AND CONOIDS.

**Assuming elements, first and second generations; plane directors of both generations; assuming points on surface.**

580. [4] Plane T($-3\frac{3}{4}''$, $-15°$, $+22\frac{1}{2}°$) is plane directer, A($-7\frac{5}{8}''$, $+\frac{5}{8}''$, $+2\frac{5}{8}''$) B($-6\frac{1}{8}''$, $+2\frac{1}{2}''$, 0″) and C($-4\frac{5}{8}''$, $+2\frac{3}{4}''$, $+\frac{3}{4}''$) D($-3\frac{3}{4}''$, $+\frac{3}{8}''$, $+2''$) the directrices of a Hyperbolic Paraboloid. Find the projections of an element of the surface parallel to the line E($-2\frac{7}{8}''$, 0″, z) F($-1\frac{1}{2}''$, $+\frac{1}{4}''$, z) lying in the plane directer.

581. [4] In the Hyperbolic Paraboloid of Prob. 580, find an element of the surface through the point K($-7\frac{1}{8}''$, y, z) on the directrix AB.

582. [4] A conoid has plane T($-3\frac{1}{2}''$, $+30°$, $-30°$) as a directer and line A($-7\frac{1}{2}''$, $-\frac{1}{4}''$, $-2\frac{3}{8}''$) B($-6''$, $-2''$, $-\frac{1}{8}''$) and arcs of $2\frac{7}{8}''$ radius struck to the right of the projections of B as centers for directrices. Find an element of the conoid parallel to line C($-3''$, $-\frac{1}{8}''$, z) D($-\frac{3}{4}''$, $-\frac{5}{8}''$, z) lying in the plane directer.

583. [4] In the Conoid of Prob. 582, find an element of the surface through the point K($-7''$, y, z) on AB.

584. [2] Given the plane directer T($-3''$, $+18°$, $-110\frac{1}{2}°$) of a Hyperbolic Paraboloid, with right line directrices A($-7\frac{3}{4}''$, $-2''$, $-3''$) B($-6\frac{3}{4}''$, $-\frac{1}{4}''$, $-\frac{1}{2}''$) and C($-5\frac{1}{2}''$, $-1\frac{1}{8}''$, $-2\frac{5}{8}''$) D($-4''$, $-2\frac{3}{4}''$, $-\frac{5}{8}''$). Find the 9 elements of the surface which divide the directrix AB into 8 equal parts. Find a point E on the surface whose H projection is the point ($-5''$, $-2''$, 0″).

585. [2] The lines M($-6''$, $+\frac{3}{4}''$, 0″) N($-4''$, $+2''$, $+2''$), P($-2''$, $+1''$, 0″) Q($-1''$, $-1\frac{1}{4}''$, $+1\frac{3}{4}''$) are the directrices of a Hyperbolic Paraboloid whose plane directer is H. Asume 10 elements of the surface and find a point E on the surface whose H projection is the point ($-4\frac{1}{4}''$, $+1\frac{1}{4}''$, z″).

586. [2] In the Hyperbolic Paraboloid of Prob. 585, find the plane directer of

the second generation, ten elements of the second generation, and a point A on the surface whose V projection is $(-2\frac{1}{4}'', y, +\frac{5}{8}'')$.

587. [1] The two right lines $M(-13\frac{1}{2}'', +4\frac{1}{2}'', +3\frac{1}{2}'')$ $N(-11\frac{1}{2}'', +1'', 0'')$ and $P(-8\frac{1}{2}'', 0'', +3'')$ $Q(-5\frac{1}{2}'', +5\frac{1}{4}'', 0'')$ are the directrices of Hyperbolic Paraboloid, whose plane directer is $D(-13\frac{1}{2}'', -150°, +120°)$. Find (1) five elements of the first generation through points M, A, B, C, N which divide the directrix MN into 4 equal parts, (2) plane directer of the second generation, (3) five elements of the second generation.

588. [1] The two right lines $M(-13\frac{1}{2}'', +4\frac{1}{2}'', +3\frac{1}{2}'')$ $N(-11\frac{1}{2}'', +1'', 0'')$ and $P(-8\frac{1}{2}'', 0'', +3'')$ $Q(-5\frac{1}{2}'', +5\frac{1}{4}'', 0'')$ are the directrices of a Hyperbolic Paraboloid, whose plane directer is $D(-13\frac{1}{2}'', -150°, +120°)$. Find (1) nine elements of the first generation through points on the directrix MN which divide it into 8 equal parts, (2) the vertical projection of a point O in the surface whose H projection is at the point $(-11'', +2'', 0'')$, (3) an element of the 2nd generation through this point O.

589. [1] The two right lines $M(-12'', -5\frac{1}{4}'', -\frac{1}{2}'')$ $N(-6\frac{1}{4}'', -3'', -4\frac{1}{4}'')$ and $P(-11\frac{1}{4}'', -1'', -4'')$ $Q(-7\frac{3}{4}'', -1'', -1\frac{3}{4}'')$ are the directrices of a Hyperbolic Paraboloid. The lines MQ and PN are elements of the first generation. Find (1) eight elements of the first generation through points P, A, B, C, D, E, F, Q which divide the directrix PQ into 7 equal parts, (2) plane directers $D_1$ and $D_2$ of the first and second generations, (3) an element of the second generation through a point $K(-8'', y'', -3\frac{1}{2}'')$ on the surface.

590. [1] The two right lines $M(-12\frac{1}{2}'', -5'', -3'')$ $N(-12\frac{1}{2}'', 0'', -3'')$ and $P(-8\frac{1}{2}'', 0'', -1\frac{1}{2}'')$ $Q(-5\frac{1}{2}'', -5'', -4\frac{1}{2}'')$ are the directrices of a Hyperbolic Paraboloid whose plane directer is V. Find (1) five elements of the first generation through points M, A, B, C, N which divide the directrix MN into 4 equal parts, (2) plane directer for the second generation, (3) an element of the second generation through a point on the surface whose H projection is at the point $(-9\frac{1}{2}'', 0'', -2\frac{5}{8}'')$.

591. [1] Lines $M(-12'', 0'', -1'')$ $N(-9'', -3\frac{1}{2}'', -3\frac{1}{2}'')$ and $P(-7'', 0'', -2'')$ $Q(-5\frac{1}{2}'', -3\frac{1}{2}'', -2\frac{1}{4}'')$ are the directrices of a Hyberbolic Paraboloid whose plane directer is V. Find (1) the 9 elements of the first generation which divide the directrix MN into 8 equal parts, (2) the plane directer of the second generation, (3) the H projection of the point $K(-9\frac{1}{2}'', y, -1\frac{7}{8}'')$ on the surface, (4) an element of the 2nd generation through this point K.

592. [2] Lines $A(-6\frac{1}{2}'', -\frac{1}{2}'', -\frac{1}{4}'')$ $B(-5'', -2'', -4'')$ and $C(-3'', -\frac{1}{4}'', -3\frac{1}{2}'')$ $D(-\frac{1}{2}'', -4'', -2'')$ are directrices of a Hyperbolic Paraboloid of which BC and AD are elements of the first generation. Find 13 elements of each generation, and a plane directer for each generation, through convenient points.

593. [2] Lines $A(-6\frac{1}{2}'', -\frac{1}{2}'', -\frac{1}{4}'')$ $D(-\frac{1}{2}'', -4'', -2'')$, $B(-5'', -2'', -4'')$ $C(-3'', -\frac{1}{4}'', -3\frac{1}{2}'')$ are directrices of a Hyperbolic Paraboloid of which AB and CD are elements. Find seventeen other elements of the same generation, plane directers for the first and second generation through convenient points, the vertical projections of a point $M(-3\frac{1}{4}'', -1\frac{3}{4}'', z)$ on the surface, and an element of the second generation through this point M.

594. [2] Lines $A(-6\frac{1}{2}'', -\frac{1}{2}'', -\frac{1}{4}'')$ $B(-5'', -2'', -4'')$ and $C(-3'', -\frac{1}{4}'', -3\frac{1}{2}'')$ $D(-\frac{1}{2}'', -4'', -2'')$ are directrices of a Hyperbolic Paraboloid of which AC and BD are elements. Find thirteen other elements of this same generation, a plane directer for the second generation through the point $K(-1\frac{1}{2}'', -\frac{1}{4}'', -\frac{1}{2}'')$, and the point on the surface whose V projection is at $(-3\frac{1}{4}'', 0'', -2\frac{3}{4}'')$.

## HYPERBOLOIDS OF ONE NAPPE, ETC.

**Assuming elements through given points.**

595. [2] A Hyperboloid of one Nappe has as directrices the three given right lines A$(-6'', -\frac{1}{2}'', -2\frac{1}{2}'')$ B$(-5'', -2'', -\frac{1}{4}'')$ and C$(-4\frac{1}{2}'', -3'', -2\frac{1}{2}'')$ D$(-3\frac{1}{2}'', -\frac{1}{4}'', -\frac{1}{4}'')$ and E$(-3'', -1\frac{1}{4}'', -\frac{1}{4}'')$ F$(-1'', -3'', -3'')$. Find an element of the surface through the point G$(-5\frac{3}{4}'', y'', z'')$ on AB; also an element through the point F.

596. [2] A Hyperboloid of one Nappe has as directrices the 3 right lines A$(-2\frac{1}{2}'', +\frac{1}{2}'', +2\frac{1}{2}'')$ B$(-3\frac{1}{2}'', +2'', +\frac{1}{4}'')$, C$(-4'', +3'', +2\frac{1}{2}'')$ D$(-5'', +\frac{1}{4}'', +\frac{1}{4}'')$ and E$(-5\frac{1}{2}'', +1\frac{1}{4}'', +\frac{1}{4}'')$ F$(-7\frac{1}{2}'', +3'', +3'')$. Find an element of the surface through M$(-4\frac{1}{2}'', y, z)$ on CD; also an element through the point F.

597. [4] The directrices of a Hyperboloid of one Nappe are the right lines A$(-7'', +2'', +\frac{1}{4}'')$ B$(-6'', +\frac{1}{4}'', +1\frac{1}{2}'')$ C$(-5\frac{3}{4}'', +1\frac{1}{2}'', +1\frac{3}{8}'')$ D$(-5'', +\frac{3}{8}'', +\frac{3}{8}'')$ and E$(-4\frac{3}{4}'', 0'', +2\frac{3}{8}'')$ F$(-4'', +2'', +\frac{1}{2}'')$. Find an element of the surface through the point M$(-6\frac{1}{2}'', y, z)$ on AB.

598. [4] A warped surface has as directrices the right line A$(-4\frac{3}{8}'', -2\frac{3}{8}'', -\frac{1}{2}'')$ B$(-5\frac{7}{8}'', -\frac{3}{4}'', -2\frac{5}{8}'')$, arcs of $2\frac{1}{2}''$ radius struck to the left with the projections of B as centtrs, and arcs of $2\frac{1}{2}''$ radius struck to the right with the projections of A as centers. Find an element of the surface through the point C$(-5\frac{1}{8}'', y'', z'')$ in line AB.

599. [4] A warped surface has as directrices right lines A$(-4\frac{1}{4}'', +2\frac{1}{2}'', +\frac{5}{8}'')$ B$(-4\frac{3}{4}'', +1\frac{3}{8}'', +1\frac{1}{2}'')$ and C$(-6\frac{1}{2}'', +2\frac{3}{4}'', +1\frac{7}{8}'')$ D$(-7\frac{3}{4}'', +\frac{1}{2}'', +\frac{7}{8}'')$ and arcs of $2\frac{1}{2}''$ radius struck to the right with the projections of A as centers. Find an element through point B.

## HYPERBOLOIDS OF REVOLUTION OF ONE NAPPE.

**Assume elements; second generations; construction of meridian curves; assume points on surface.**

600. [1] The line A$(-9'', -3\frac{1}{2}'', -2\frac{1}{4}'')$ B$(-9'', 0'', -2\frac{1}{4}'')$ is the axis of a Hyperboloid of Revolution of one Nappe, located in the third quadrant with its base in V. The generatrix in its initial position is M$(-11'', 0'', -1\frac{3}{4}'')$ N$(-9'', -1\frac{3}{4}'', -1\frac{3}{4}'')$. Find (1) thirty-two elements of one generation of the surface, which pierce V at equal intervals around the circumference of its base, (2) the horizontal projection of the medirian section parallel to H, (3) an element of each generation through a point K whose V projection is not in the V projection of any of the above 32 elements.

601. [1] The line A$(-11'', +2\frac{3}{4}'', +5'')$ B$(-11'', +2\frac{3}{4}'', 0'')$ is the axis of a Hyperboloid of Revolution of one Nappe which stands in the first quadrant with its base in H. The generatrix in its initial position is M$(-13\frac{1}{2}'', +2'', 0'')$ N$(-11'', +2'', +2\frac{1}{2}'')$. Find (1) sixteen elements of each generation of the surface, which pierce H at equal intervals around the circumference of its base, (2) the vertical projection of the meridian section parallel to V, (3) the vertical projection of a meridian section making 45° with V.

602. [2] The line A$(-5'', -2'', -4'')$ B$(-5'', -2'', 0'')$ is the axis of a Hyperboloid of Revolution of one Nappe, located in the third quadrant with its upper and lower bases respectively in H and in a horizontal plane 4″ below H. The generatrix of this surface is, in its initial position, the line M$(-6\frac{1}{2}'', -1\frac{1}{2}'', -4'')$ N$(-5'', -1\frac{1}{2}'', -2'')$. Find (1) thirty-two elements of one generation of the surface which pierce H at equal intervals around the circumference of its base,

(2) the vertical projection of the meridian section parallel to V, (3) the vertical projection of a meridian section making 45° with V.

603. [2] A Hyperboloid of Revolution of one Nappe stands in the first quadrant with its base of 4″ diameter in H with center at the point O($-4\frac{1}{4}''$, $+2\frac{1}{4}''$, 0″). The circle of the gorge, of $2\frac{1}{2}''$ diameter, is on a horizontal plane $1\frac{1}{4}''$ above H, with its center directly above O. Find (1) thirty-two elements of the surface, (2) the vertical projection of the meridian section parallel to V, (3) an element of each generation through a point K whose H projection is not on the H projection of any of the thirty-two elements assumed above.

604. [2] A portion of a Hyperboloid of Revolution of one Nappe is generated by the revolution of the line C($-4\frac{1}{2}''$, $+4''$, $+2\frac{5}{8}''$) D($-2''$, $+2\frac{1}{8}''$, 0″) about the axis A($-4''$, $+2\frac{1}{2}''$, 0″) B($-4''$, $+2\frac{1}{2}''$, $+4\frac{1}{2}''$). Show 32 elements of this surface and determine accurately the projections of the meridian curve cut from the surface by a meridian plane parallel to V.

605. [1] G. L. par. to short edge of sheet. A portion of a Hyperboloid of Revolution of one Nappe is generated by the revolution of line M($-7\frac{3}{8}''$, $+1\frac{3}{8}''$, $+\frac{3}{4}''$) N($-5\frac{1}{8}''$, $+4\frac{3}{4}''$, $+5\frac{1}{4}''$) about the line A($-5\frac{1}{2}''$, $+3''$, $+\frac{3}{4}''$) B($-5\frac{1}{2}''$, $+3''$, $+5\frac{1}{4}''$) as an axis. Find 16 elements of each generation of the surface and determine accurately the projections of the meridian section parallel to V.

## HELICOIDS.

**Oblique and Right; assume elements; intersections with H or V; assume points on surface.**

606. [2] The line A($-4''$, $+2''$, $+4''$) B($-4''$, $+2''$, 0″) is the axis of an oblique Helicoid; the generatrix in initial position is M($-5\frac{1}{2}''$, $+2''$, 0″) N($-4''$, $+2''$, $+1\frac{1}{2}''$) which moves in such a way that its horizontal projection appears to rotate counter-clockwise. The pitch of the helix which is generated by the point M is 2″. Find (1) sixteen elements of the surface generated during one complete movement of the generatrix about the axis, (2) the intersection of the surface thus determined with the H plane of projection, (3) the two projections of a point K which is not on any of the elements assumed above.

607. [2] The line A($-4\frac{1}{4}''$, $-1\frac{3}{4}''$, $-4''$) B($-4\frac{1}{4}''$, $-1\frac{3}{4}''$, 0″) is the axis of an oblique Helicoid, whose generatrix in initial position is M($-5\frac{1}{2}''$, $-1\frac{3}{4}''$, $-4''$) N($-4\frac{1}{4}''$, $-1\frac{3}{4}''$, $-1\frac{3}{4}''$). This generatrix moves in such a way that its H projection appears to rotate clockwise and the point M generates a helix whose pitch is $2\frac{1}{2}''$. Find (1) sixteen elements of the surface generated during one complete movement of the generatrix about the axis, (2) the intersection of the surface thus determined with a horizontal plane 4″ below H, (3) the projections of a point K of the surface not on one of the above elements.

608. [2] The line A($-5''$, $-4''$, $-2''$) B($-5''$, 0″, $-2''$) is the axis of a Right Helicoid whose generatrix in its initial position is determined by the points M($-3\frac{1}{2}''$, 0″, $-2''$) and N($-5''$, 0″, $-2''$). This generatrix moves in such a way that its V projection appears to rotate clockwise, and the point M generates a helix whose pitch is 2″. Find (1) thirty-two elements of the surface, generated while the generatrix swings about the axis twice, (2) the projections of another helicoid, exactly similar to the first and $\frac{1}{2}''$ above it.

609. [2] The line A($-4''$, $-2\frac{1}{2}''$, 0″) B($-4''$, $-2\frac{1}{2}''$, $-5''$) is the axis of a Right Helicoid, whose generatrix in its initial position, is determined by the points M($-6\frac{1}{2}''$, $-2\frac{1}{2}''$, $-5''$) and N($-4''$, $-2\frac{1}{2}''$, $-5''$). This generatrix moves in such a way that its H projection appears to rotate counter-clockwise, while the point M generates a helix whose pitch is $2\frac{1}{2}''$. Find (1) sixty-four elements of the surface, generated while MN swings about the axis twice, (2) the projections of

another right helicoid, with same axis, same pitch, generatrix starting from same initial position, but being only $1\frac{1}{2}''$ in length.

610. [1] G. L. par. to short edges of sheet. An oblique Helicoid is in the first quadrant, with a vertical axis through the point $O(-5\frac{1}{2}'', +2'', 0'')$. Its generatrix moves from its initial position $A(-7'', -2'', 0'')$ $B(-5\frac{1}{2}'', -2'', +2\frac{1}{2}'')$ so that its H projection appears to rotate counter-clockwise, while the point A generates a helix of 8″ pitch. Find (a) 12 elements of the surface generated in $\frac{3}{4}$ of a revolution, (b) the intersection of the surface thus determined with H, (c) the projections of the helices generated by the two points which divide the generatrix into 3 equal parts.

611. [2] The line $M(-3\frac{3}{4}'', +1\frac{3}{4}'', 0'')$ $N(-3\frac{3}{4}'', +1\frac{3}{4}'', +4'')$ is the axis of an oblique Helicoid whose elements make an angle of 45° with H. In initial position the generatrix pierces H at $K(-2\frac{1}{2}'', +1\frac{3}{4}'', 0'')$ and K appears to rotate clockwise. Find (1) 16 elements of the surface formed in one revolution, (2) the intersection of the surface thus determined with the H plane.

612. [2] An oblique Helicoid has as axis the line $M(-4\frac{1}{2}'', 0'', -2'')$ and $N(-4\frac{1}{2}'', -4\frac{1}{2}'', -2'')$, its elements making 30° with this axis. In initial position the generatrix pierces H at the point $K(-6'', 0'', -2)$ and in moving K generates a helix of 4″ pitch. Find 16 elements of the first convolution, and the curve in which the surface thus determined cuts V.

613. [4] An oblique helicoid has as axis vertical line through $N(-4'', +1'', 0'')$, its elements making $22\frac{1}{2}°$ with the H plane. In initial position the generatrix pierces H at the point $K(-3'', +2'', 0'')$ and in moving K generates a helix of 2″ pitch. Find 16 elements of the first convolution of the surface.

## APPLICATIONS.

614. Fig. 50 shows a square threaded screw, formed by the motion of a square about a line in its plane as axis. Each point in the square generates a helix. The top and bottom thread surfaces are right helicoids, limited by the blank and root cylinders. Find the projections of such threads, showing clearly the method of construction, with the following dimensions:—

1. [8] $D = 1\frac{1}{4}''$. $P = \frac{1}{2}''$.
2. [8] $D = 2''$. $P = \frac{3}{4}''$.
3. [4] G. L. par. to short edge of space. $D = 3''$. $P = 1\frac{1}{2}''$.
4. [4] G. L. par. to short edge of space. $D = 2\frac{1}{2}''$. $P = \frac{3}{4}''$.

615. In Fig. 51 is shown a "V" thread. The two surfaces are oblique helicoids and the threads may be thought of as having been generated by the motion of a triangle about a right line in its plane as axis, each point generating a helix. Such threads or modifications thereof are common on bolts, screws, etc. Find the projections of such threads, showing clearly the method of construction, with the following dimensions:—

1. [8] $D = 1\frac{1}{4}''$. $P = \frac{1}{2}''$. Thread angle = 60°.
2. [8] $D = 2''$. $P = \frac{3}{4}''$. Thread angle = 90°.
3. [2] $D = 2\frac{1}{2}''$. $P = \frac{3}{4}''$. Thread angle = 60°.
4. [2] $D = 3''$. $P = 2''$. Thread angle = 90°.

616. In Fig. 52 is shown a round helical spring generated by moving a circle about a line in its plane in such a way that all its points generate helices of the same pitch. Find the projections of such a spring, using the following dimensions:—

1. [8] $D = 1\frac{1}{2}''$. $d = \frac{3}{8}''$. $P = 1''$.
2. [8] $D = 2''$. $d = \frac{1}{2}''$. $P = 1\frac{1}{2}''$.
3. [2] $D = 4''$. $d = 1''$. $P = 2''$.

617. In Fig. 53 is shown a square helical spring, formed by the motion of a square about a line in its plane as an axis, each point generating a helix of the same pitch. Find the projections of such a spring, using the following dimensions:—

1. [8] D = $1\frac{1}{2}''$. P = $\frac{3}{4}''$. S = $\frac{1}{4}''$.
2. [8] D = $2''$. P = $1''$. S = $\frac{1}{2}''$.
3. [2] D = $3''$. P = $1\frac{1}{2}''$. S = $\frac{3}{4}''$.

618. In Fig. 54 is shown a helicoidal conveyor, whose flights are right helicoidal surfaces. Neglecting the thickness of the flight, find the projections of such a conveyor, using the following dimensions, and scale, $1'' = 1'-0''$.

1. [8] D = $15''$. d = $3''$. P = $9''$.
2. [8] D = $2'-0''$. d = $6''$. P = $12''$.
3. [2] D = $2'-6''$. d = $12''$. P = $2'-0''$.

619. In Fig. 56 is shown a wood screw thread formed by 2 helical convolute surfaces, the large spaces being left between threads to make up for the small shearing strength of wood as compared to the metal used. Find the projections of such a screw thread, using the following dimensions:—

1. [8] D = $2''$. d = $1\frac{1}{4}''$. P = $1\frac{1}{2}''$.
2. [8] D = $2''$. d = $1\frac{1}{2}''$. P = $1''$.
3. [2] D = $3''$. d = $2''$. P = $2''$.

620. [1] Fig. 57 shows a right helicoidal stairway built in a square tower, with a cylindrical sheet metal well. Assume reasonable dimensions and a convenient scale, and construct the detailed projections of such a stairway, showing all necessary construction lines.

621. [1] Fig. 58 shows a right helicoidal stairway designed for a cylindrical corner tower in a gymnasium, with a cylindrical well. Asume reasonable dimensions and a convenient scale, and construct the detailed projections of such a stairway, showing all necessary construction lines.

## PLANES TANGENT TO SURFACES.

**Through points on surface; through points off the surface; parallel to given lines; through given lines.**

### 1.—PLANES TANGENT TO RIGHT CYLINDERS.

625. [2] Pass a plane tangent to the right cylinder whose base is a 3″ circle with center at O($-4\frac{7}{8}''$, $+2\frac{1}{2}''$, 0″) and lying in the H plane.

(a) Through the point K($-3\frac{1}{2}''$, y, $+2\frac{1}{2}''$) on the surface.
(b) Through the point M($-5\frac{1}{2}''$, $+\frac{3}{8}''$, $+3''$), not on the surface.
(c) Parallel to the line Q($-6''$, $+2\frac{1}{8}''$, $+\frac{3}{4}''$) R($-2\frac{1}{2}''$, $+4\frac{3}{4}''$, $+4''$).

626. [2] Pass a plane tangent to the right cylinder whose base is in the V plane and is the ellipse whose major axis is 3″ long, makes $-45°$ with the ground line and is intersected at point B($-4\frac{1}{4}''$, 0″, $-2\frac{3}{8}''$) by the minor axis, which is 2″ long.

(a) Through a convenient point M on the surface.
(b) Through an assumed point N not on the surface.
(c) Parallel to the line G($-6\frac{3}{4}''$, $-3\frac{1}{2}''$, $-3''$) H($-3\frac{1}{2}''$, $-1''$, $-1\frac{7}{8}''$).

627. [4] P at $-4''$. Pass a plane tangent to the right cylinder whose base is a $2\frac{1}{4}''$ circle lying in P with center at K(0″, $-1\frac{1}{4}''$, $-1\frac{1}{2}''$).

(a) Through point L($-1\frac{7}{8}''$, $-\frac{1}{2}''$, z) on the surface.
(b) Through point N($-3''$, $+\frac{3}{8}''$, $-\frac{1}{8}''$), off the surface.
(c) Parallel to line O($-2''$, $-\frac{3}{4}''$, $-\frac{1}{4}''$) Q($-\frac{1}{2}''$, $-1\frac{1}{2}''$, $-1\frac{1}{2}''$).

628. [2] Pass a plane tangent to the right cylinder whose base is a $2\frac{1}{2}''$ circle lying in the H plane with center at M($-5\frac{1}{4}''$, $-3\frac{1}{4}''$, 0″).

(a) Through a convenient point A on the surface.
(b) Through point R($-2\frac{3}{4}''$, $-1''$, $-1\frac{3}{4}''$), off the surface.
(c) Parallel to line S($-6\frac{1}{8}''$, $-4''$, $-3\frac{1}{4}''$) T($-3\frac{1}{4}''$, $-1\frac{1}{4}''$, $-\frac{7}{8}''$).

### 2.—PLANES TANGENT TO OBLIQUE CYLINDERS.

629. [2] Pass a plane tangent to the cylinder having line A($-3\frac{1}{2}''$, $+3''$, $+2\frac{1}{4}''$) B($-5''$, $+2\frac{1}{4}''$, 0″) for its axis and its base in H, a circle of 3″ diameter with center at B.

(a) Through the point O($-3''$, $+2\frac{5}{8}''$, z) on the surface of the cylinder.
(b) Through the point C($-1\frac{1}{4}''$, $+3''$, $+1\frac{5}{8}''$), not on the surface.
(c) Parallel to the line Q($-1\frac{1}{8}''$, $+2\frac{7}{8}''$, 0″) R($-2''$, $+1\frac{1}{4}''$, $+3''$).

630. [2] Pass a plane tangent to the oblique cylinder whose axis is the line K($-5\frac{1}{4}''$, 0″, $-1\frac{1}{2}''$) L($-2\frac{1}{2}''$, $-2\frac{3}{4}''$, $-3''$) and whose base in V is an ellipse whose major axis is 4″ long, makes an angle of $-30°$ with ground line and is intersected at pt. K by the minor axis which is 2″ long.

(a) Through a point A on the surface.
(b) Through point M($-1\frac{3}{8}''$, $-1\frac{3}{8}''$, $-1\frac{3}{4}''$), not on the surface.
(c) Parallel to line N($-6\frac{3}{8}''$, $-2\frac{7}{8}''$, $-\frac{7}{8}''$) R($-4\frac{1}{2}''$, $-1\frac{1}{4}''$, $-3''$).

631. [2] P at $-3\frac{1}{2}''$. Pass a plane tangent to the cylinder whose base is a 2″ circle lying in P with its center at A(0″, $-1\frac{1}{4}''$, $-1\frac{1}{2}''$) and having AB($-4\frac{1}{4}''$, $-2\frac{5}{8}''$, $-2\frac{3}{4}''$) for its axis:

(a) Through point C($-2\frac{1}{2}''$, $-1\frac{1}{2}''$, z) on the surface.
(b) Through point D($-1\frac{1}{8}''$, $-3''$, $-1\frac{1}{4}''$).
(c) Parallel to line E($-1\frac{5}{8}''$, $-2\frac{1}{2}''$, $+\frac{3}{8}''$) F($-3\frac{1}{4}''$, $-1\frac{7}{8}''$, $-2\frac{3}{4}''$).

632. [2] Pass a plane tangent to the cylinder whose base is a $2\frac{1}{2}''$ circle lying in H with its center at $G(-6\frac{5}{8}'', -2\frac{1}{4}'', 0'')$, whose axis is $GH(-1\frac{3}{4}'', -4\frac{1}{2}'', -3\frac{3}{8}'')$.

(a) Through point $K(-3\frac{1}{8}'', y, -1\frac{3}{4}'')$ on the surface.
(b) Through point $L(-1\frac{1}{4}'', -2'', -2\frac{3}{8}'')$.
(c) Parallel to line $M(-6\frac{7}{8}'', +\frac{1}{2}'', -1'')$ $N(-3\frac{7}{8}'', -3\frac{1}{8}'', -4\frac{3}{8}'')$.

## 3.—PLANES TANGENT TO RIGHT CONES.

633. [4] Pass a plane tangent to a right cone whose base is a $1\frac{3}{4}''$ circle lying in H with center at $O(-5\frac{7}{8}'', +1\frac{3}{8}'', 0'')$ and whose altitude is $2\frac{1}{2}''$.

(a) Through point $M(-5\frac{1}{2}'', y, +\frac{3}{4}'')$ on the surface.
(b) Through point $N(-4\frac{1}{2}'', +\frac{3}{4}'', +\frac{5}{8}'')$, not on the surface.
(c) Parallel to line $K(-3\frac{3}{8}'', +2'', +2\frac{1}{4}'')$ $L(-1\frac{1}{2}'', +1\frac{1}{4}'', +\frac{3}{4}'')$.

634. [4] P at $-3\frac{1}{2}''$. Pass a plane tangent to a right cone whose base is a $1\frac{3}{4}''$ circle lying in a plane perpendicular to the ground line with center at $R(-1\frac{1}{4}'', -1\frac{1}{4}'', -1\frac{1}{2}'')$ and whose altitude is $3\frac{1}{8}''$:

(a) Through a point $A(-2\frac{1}{4}'', -1'', z'')$ on the surface.
(b) Through a point $B(-2\frac{3}{4}'', -\frac{1}{2}'', -\frac{1}{2}'')$, not on the surface.
(c) Parallel to line $S(-3\frac{5}{8}'', -\frac{1}{2}'', -2'')$ $T(-\frac{3}{4}'', +\frac{3}{8}'', -1'')$.

635. [2] Pass a plane tangent to a right cone having for its base the ellipse whose major axis is $4\frac{1}{4}''$ long and makes $+30°$ with the ground line, and whose minor axis is $2\frac{3}{4}''$ long and intersects the major axis at point $O(-4\frac{5}{8}'', -2\frac{5}{8}'', 0'')$. Its base is in the H plane and its altitude $4\frac{1}{2}''$.

(a) Through point $D(-3\frac{3}{4}'', y, -1\frac{1}{8}'')$ on the surface.
(b) Through point $Q(-6'', -3\frac{3}{4}'', -1\frac{7}{8}'')$, off the surface.
(c) Parallel to line $R(-4\frac{1}{4}'', -\frac{5}{8}'', -\frac{3}{4}'')$ $S(-6'', -1\frac{3}{4}'', -3\frac{3}{8}'')$.

## 4.—PLANES TANGENT TO OBLIQUE CONES.

636. [2] Pass a plane tangent to the cone whose base is the $2\frac{1}{2}''$ circle lying in a plane parallel to H with center at $A(-2\frac{3}{8}'', -3'', -4\frac{1}{2}'')$ and whose vertex is at $B(-6\frac{1}{2}'', -\frac{1}{2}'', -\frac{1}{2}'')$:

(a) Through point $C(-5\frac{1}{2}'', -1\frac{3}{8}'', z)$ on the surface.
(b) Through point $D(-3\frac{7}{8}'', -1\frac{1}{8}'', -3'')$, not on the surface.
(c) Parallel to line $E(-2\frac{1}{2}'', -2\frac{7}{8}'', -2'')$ $F(-6\frac{7}{8}'', -2\frac{5}{8}'', +3'')$.

637. P at $-3\frac{1}{2}''$. Pass a plane tangent to the oblique cone whose base is a $2\frac{7}{8}''$ circle lying in P with center at $L(0'', -1\frac{5}{8}'', -2\frac{1}{2}'')$, and whose vertex is at $M(-3\frac{7}{8}'', -3\frac{1}{8}'', -4\frac{3}{4}'')$.

(a) Through point $N(-1\frac{1}{2}'', y, -3\frac{1}{8}'')$ on the surface.
(b) Through point $O(-\frac{1}{2}'', -2'', -1'')$.
(c) Parallel to line $R(-\frac{3}{4}'', -\frac{5}{8}'', -\frac{1}{8}'')$ $Q(-3\frac{1}{2}'', -\frac{1}{2}'', -2\frac{1}{4}'')$.

638. [2] Pass a plane tangent to the cone whose base is the ellipse with major axis $A(-6'', +3'', 0'')$ $B(-1\frac{1}{4}'', +3'', 0'')$ and minor axis $C(-3\frac{5}{8}'', +4\frac{3}{4}'', 0'')$ $P(-3\frac{5}{8}'', +1\frac{1}{4}'', 0'')$ and whose vertex is $E(-7\frac{1}{4}'', +4\frac{1}{4}'', +4\frac{7}{8}'')$.

(a) Through a point M on the surface.
(b) Through a point N not on the surface.
(c) Parallel to the line $F(-2\frac{5}{8}'', +\frac{3}{4}'', +1'')$ $G(-4\frac{1}{4}'', +3\frac{1}{4}'', +4'')$.

639. [2] Pass a plane tangent to the oblique cone having $O(-1\frac{1}{4}'', +4\frac{1}{4}'', +1\frac{1}{8}'')$ for its apex and the $3\frac{3}{8}''$ circle lying in V with its center at $N(-6\frac{1}{4}'', 0'', +3'')$ for a base:

(a) Through the point $Q(-2\frac{7}{8}'', +2\frac{3}{8}'', z)$ on the surface.
(b) Through the point $R(-2'', +2\frac{1}{4}'', +2\frac{5}{8}'')$.
(c) Parallel to the line $S(-4\frac{7}{8}'', +4\frac{3}{8}'', +3\frac{1}{8}'')$ $T(-7'', +\frac{3}{4}'', +3\frac{3}{4}'')$.

## 5.—PLANES TANGENT TO HELICAL CONVOLUTES.

640. [2] A convolute is generated by a line moving tangent to the helix generated by the point $M(-2\frac{7}{8}'', +1\frac{5}{8}'', 0'')$ moving in a negative direction about line $N(-4\frac{1}{8}'', +1\frac{5}{8}'', +2\frac{3}{4}'')$ $O(-4\frac{1}{8}'', +1\frac{5}{8}'', 0'')$ with a pitch of $2''$. Pass a plane tangent to the convolute:

(a) Through point $Q(-3\frac{5}{8}'', +3\frac{3}{4}'', z)$ on the surface.
(b) Through point $R(-7\frac{5}{8}'', +3'', +\frac{5}{8}'')$, not on the surface.
(c) Parallel to line $S(-2\frac{3}{4}'', +\frac{5}{8}'', +1'')$ $T(+5\frac{3}{4}'', +1\frac{1}{2}'', +2\frac{1}{4}'')$.

641. [2] G. L. $\frac{3}{4}''$ above lower border of working space. A convolute is generated by a line moving tangent to the helix generated by pt. $A(-6\frac{3}{4}'', -7\frac{1}{2}'', 0'')$ moving in a positive direction about line $B(-5\frac{3}{4}'', -7\frac{1}{2}'', 0'')$ $C(-5\frac{3}{4}'', -7\frac{1}{2}'', +4'')$ with a pitch of $3\frac{1}{2}''$. Pass a plane tangent to the convolute.

(a) Through point $D(-7'', -5\frac{3}{4}'', z)$ on the surface.
(b) Through point $E(-3\frac{1}{2}'', -5\frac{1}{2}'', +1\frac{1}{4}'')$, off the surface.
(c) Parallel to line $F(-5\frac{7}{8}'', -9\frac{1}{2}'', +2\frac{1}{8}'')$ $G(-4\frac{1}{2}'', -8\frac{3}{4}'', +\frac{5}{8}'')$.

642. [2] A convolute is generated by a line moving tangent to the helix generated by pt. $A(-6\frac{3}{4}'', +4\frac{3}{8}'', 0'')$ moving in a negative direction about line $J(-5\frac{1}{2}'', +4\frac{3}{8}'', 0'')$ $K(-5\frac{1}{2}'', +4\frac{3}{8}'', +4'')$ with a pitch of $4\frac{1}{4}''$. Pass a plane tangent to the convolute:

(a) Through point $L(-6'', +2\frac{3}{8}'', z)$ on the surface.
(b) Through point $M(-3\frac{3}{4}'', +1\frac{5}{8}'', +1\frac{1}{8}'')$, not on the surface.
(c) Parallel to line $N(-2'', +1\frac{3}{8}'', +2\frac{3}{8}'')$ $O(-4\frac{7}{8}'', +1\frac{7}{8}'', +3\frac{3}{8}'')$.

## 6.—PLANES TANGENT TO HYPERBOLIC PARABOLOIDS.

643. [2] Pass a plane T tangent to the hyperbolic paraboloid of Prob. 585 through the point $O(-4'', +1\frac{1}{8}'', z)$ on the surface.

644. [1] Pass a plane S tangent to the hyperbolic paraboloid of Prob. 587 at a point R on the surface whose horizontal proj. is at the point $(-11'', +2'', 0'')$.

645. [2] Assume P at $+5''$. Pass a plane U tangent to the hyperbolic paraboloid of Prob. 589 through the point Q on the surface.

646. [1] Pass a plane T tangent to the hyperbolic paraboloid of Prob. 590 at a point O on the surface whose V projection is at the point $(-9\frac{1}{2}'', 0'', -2\frac{5}{8}'')$.

647. [2] Assume P at $+4\frac{1}{2}''$. Pass a plane R tangent to the hyperbolic paraboloid of Prob. 591 through that point O on the surface which is vertically projected at $(-9\frac{1}{2}'', 0'', -1\frac{7}{8}'')$.

648. [2] Pass a plane S tangent to the hyperbolic paraboloid of Prob. 592 at the point $K(-2\frac{3}{8}'', y, -2'')$ on the surface.

649. [2] Pass a plane R tangent to the hyperbolic paraboloid in Prob. 584 through the point O on the surface whose V projection is at $(-6\frac{7}{8}'', 0'', -2\frac{1}{8}'')$.

650. [2] The right lines $C(-7'', -2\frac{1}{4}'', -3'')$ $D(-5\frac{1}{2}'', -\frac{3}{4}'', -\frac{1}{2}'')$ and $A(-2\frac{3}{4}'', -1'', -\frac{1}{4}'')$ $B(-2\frac{3}{4}'', -1'', -3\frac{1}{2}'')$ are directrices of a Hyperbolic Paraboloid whose plane directer is H. Find a plane directer of the 2nd generation, and a plane R tangent to the surface at a point $K(-5'', y'', -2\frac{1}{4}'')$.

## 7.—PLANES TANGENT TO HYPERBOLOIDS OF ONE NAPPE.

651. [2] Pass a plane T tangent to the hyperboloid of Prob. 602 through the point $O(-4\frac{1}{4}'', -1\frac{5}{8}'', z)$ on the surface.

652. [2] Pass a plane T tangent to the hyperboloid of Prob. 603 through the point R on the surface whose H projection is at the point $(-4\frac{3}{4}'', +\frac{3}{4}'', 0'')$.

653. [2] P at $+4\frac{1}{2}''$. Pass a plane T tangent to the hyperboloid of Prob. 600 through the point $T(-8\frac{1}{2}'', y, -2\frac{7}{8}'')$ on the surface.

## 8.—PLANES TANGENT TO HELICOIDS.

654. [2] Pass a plane tangent to the helicoid of Prob. 607,

(a) Through the point O($-3\frac{1}{8}''$, y″, z″) on the helical directrix.

(b) Through the point R($-3\frac{1}{2}''$, $-1\frac{1}{4}''$, y″) on the surface.

655. [1] G. L. parallel to short edge of sheet and 2″ below middle of sheet. Pass a plane tangent to the helicoid of Prob. 610,

(a) Through the point A($-6\frac{1}{2}''$, y″, z″) on the helical directrix.

(b) Through the point B on the surface which is horizontally projected at ($-5''$, $-2\frac{3}{4}''$, 0″).

656. [2] Find the traces of a plane tangent to the helicoid of Prob. 611.

(a) Through the point A($-4\frac{3}{4}''$, y″, z″) on the helical directrix.

(b) Through the point B($-3''$, $+1\frac{1}{4}''$, z″) on the surface.

657. [2] Pass a plane tangent to the right helicoid of Prob. 608.

(a) Through the point R($-4\frac{1}{4}''$, y″, z″) on the helical directrix.

(b) Through the point S($-5\frac{1}{2}''$, y″, $+3''$) on the surface.

658. [1] Find the traces of a plane tangent to a helicoid of 3″ pitch, whose axis is C($-9\frac{1}{2}''$, $+2\frac{1}{2}''$, 0″) D($-9\frac{1}{2}''$, $+2\frac{1}{2}''$, $+4''$), initial position of generatrix E($-7\frac{1}{2}''$, $+2\frac{1}{2}''$, 0″) F($-9\frac{1}{2}''$, $+2\frac{1}{2}''$, $+2\frac{1}{4}''$) which moves so that its H projection rotates clockwise.

(a) Through the point A($-10\frac{3}{4}''$, y″, z″) on the helical directrix.

(b) Through the point B on the surface which is projected at ($-8\frac{1}{4}''$, $+3\frac{1}{4}''$, z″).

## 9.—PLANES TANGENT TO SPHERES.

659. [2] A sphere of 4″ diameter is located in the first quadrant with its center at the point O($-5\frac{1}{2}''$, $+2\frac{1}{4}''$, $+2\frac{1}{2}''$). Find a plane T, tangent to the sphere at that point P on the bottom portion of the surface whose H projection is at ($-4\frac{1}{2}''$, $+1''$, 0″).

660. [2] Find a plane S tangent to the above sphere through the right line A($-3''$, $+2\frac{5}{8}''$, $+1\frac{3}{8}''$) B($-\frac{7}{8}''$, $+\frac{1}{4}''$, $+3\frac{1}{2}''$).

661. [2] A sphere of 3″ diameter rests upon a horizontal plane in the 3rd quadrant at the point M($-3\frac{1}{2}''$, $-2''$, $-3\frac{1}{4}''$). Find a plane T tangent to the sphere at a point P on the upper portion of the surface whose H projection is ($-2\frac{3}{4}''$, $-1''$, 0″).

662. [2] Find a plane U tangent to the above sphere through the right line C($-4\frac{1}{2}''$, $-5''$, $+\frac{1}{4}''$) D($-7\frac{5}{8}''$, $-\frac{1}{2}''$, $-3\frac{3}{4}''$).

663. [2] P at $-3\frac{1}{2}''$. A sphere of $2\frac{1}{2}''$ diameter is located in the third quadrant with its center at the point O($-1\frac{3}{4}''$, $-1\frac{1}{2}''$, $-1\frac{3}{4}''$). Find the tangent plane T to the sphere at the point A on the surface whose H projection is at ($-1\frac{3}{4}''$, $-\frac{3}{8}''$, 0″).

## 10.—PLANES TANGENT TO ELLIPSOIDS.

664. [2] An ellipsoid of revolution is formed in the third quadrant by the rotation about its vertical major axis of an ellipse whose axes are respectively 3″ and 2″. Find a plane tangent to the surface at some convenient point R.

665. [2] An ellipsoid of revolution is formed in the 3rd quadrant by the rotation about its vertical minor axis, of an ellipse whose axes are 3″ and $1\frac{3}{4}''$ respectively. Find a plane tangent to the surface at a convenient point A.

666. [2] Find a plane tangent to the above ellipsoid through a convenient line BC.

667. [2] An ellipsoid of revolution is formed in the 3rd quadrant by the rotation about its vertical major axis of an ellipse whose axes are 4″ and $2\frac{1}{2}''$ respectively. Find a plane tangent to the surface at a point $\frac{1}{4}''$ from the top.

668. [2] An ellipsoid of revolution, axes 6″ and 3″ respectively, has its center at the point O($-4\frac{1}{4}''$, $+2''$, 0″), and its long axis perpendicular to H. Find a

plane tangent to the ellipsoid at a point B on the surface horizontally projected at point $(-3\frac{1}{2}'', +1\frac{1}{8}'', 0'')$.

669. [2] Find a plane N, tangent to the above ellipsoid and through the line $A(-6\frac{3}{4}'', +1\frac{5}{8}'', +\frac{1}{4}'')$ $B(-5'', +4\frac{1}{8}'', +2\frac{7}{8}'')$.

## 11.—PLANES TANGENT TO HYPERBOLOIDS AND PARABOLOIDS OF REVOLUTION.

670. [2] A Hyperbola, in a plane parallel to V, has its foci at the points $F(-5\frac{1}{4}'', -2\frac{1}{2}'', -2\frac{1}{2}'')$ and $G(-3\frac{1}{4}'', -2\frac{1}{2}'', -2\frac{1}{2}'')$ and its vertices at the points $V(-4\frac{3}{4}'', -2\frac{1}{2}'', -2\frac{1}{2}'')$, $W(-3\frac{3}{4}'', -2\frac{1}{2}'', -2\frac{1}{2}'')$. This Hyperbola spins about its vertical conjugate axis and generates a Hyperboloid of Revolution. Find a plane T, tangent to the surface at the point K on the surface which is projected at $(-3\frac{1}{4}'', y, -1'')$.

671. [2] The line $A(-5\frac{1}{2}'', -2\frac{1}{4}'', -\frac{1}{2}'')$ $B(-1'', -2\frac{1}{4}'', -\frac{1}{2}'')$ is the directrix and the point $F(-3\frac{1}{2}'', -2\frac{1}{4}'', -1'')$ the focus of a parabola which is the generatrix of a paraboloid of revolution formed by rotating the parabola about its axis. Find a plane T tangent to the surface at a point K on the surface.

672. [2] Pass a plane T tangent to the above paraboloid through the line $K(-6\frac{3}{4}'', -\frac{5}{8}'', -4\frac{1}{4}'')$ $M(-4\frac{1}{2}'', -3\frac{1}{2}'', -\frac{1}{2}'')$.

673. [2] A hyperbola, in a plane parallel to V, has its foci at the points $F(-4\frac{1}{2}'', -2\frac{1}{2}'', -1\frac{3}{4}'')$ and $G(-4\frac{1}{2}'', -2\frac{1}{2}'', -3\frac{1}{4}'')$, and its vertices at the points $V(-4\frac{1}{2}'', -2\frac{1}{2}'', -2'')$ and $W(-4\frac{1}{2}'', -2\frac{1}{2}'', -3'')$. This hyperbola spins about its vertical transverse axis and generates a Hyperboloid of Revolution. Find a plane S tangent to the surface through the point O on the surface whose V projection is at the point $(-4\frac{1}{2}'', 0'', -3\frac{1}{4}'')$.

674. [2] P at $+3''$. The line $A(-8\frac{1}{2}'', -2'', -4'')$ $B(-8\frac{1}{2}'', -2'', 0'')$ is the directrix and the point $F(-7\frac{1}{2}'', -2'', -2'')$ the focus of a parabola which is the generatrix of a paraboloid of revolution with AB as its axis. Find the plane T tangent to the surface at a point P on the surface which is horizontally projected at $p(-8'', -1\frac{1}{4}'', 0'')$.

675. [2] P at $+3''$. Find a plane U tangent to the above surface through line $K(-3\frac{7}{8}'', -2\frac{5}{8}'', +\frac{1}{4}'')$ $N(-5\frac{5}{8}'', -\frac{1}{4}'', +1\frac{1}{2}'')$.

## 12.—PLANES TANGENT TO TORI.

676. [2] A Torus is formed by the revolution of a circle of $1\frac{1}{2}''$ diameter about the axis $A(-4\frac{3}{4}'', +2\frac{3}{4}'', +4'')$ $B(-4\frac{3}{4}'', +2\frac{3}{4}'', 0'')$. The circle in its initial position is parallel to V with its center at the point $O(-6\frac{1}{4}'', +2\frac{3}{4}'', +1\frac{3}{4}'')$. Find a plane T tangent to the surface through the pt. M on the bottom of the surface horizontally projected at $M(-3\frac{1}{4}'', +4'', 0'')$.

677. [2] A Torus is formed by the revolution of a circle of $1\frac{3}{4}''$ diameter about the axis $A(-3\frac{1}{2}'', -2\frac{3}{4}'', -3'')$ $B(-3\frac{1}{2}'', -2\frac{3}{4}'', 0'')$. The circle in its initial position is parallel to V with its center at the point $O(-4\frac{7}{8}'', -2\frac{3}{4}'', -1\frac{5}{8}'')$. Find a plane U tangent to the surface through the line $M(-4\frac{1}{4}'', 0'', -3\frac{3}{8}'')$ $N(-6\frac{1}{8}'', -1\frac{5}{8}'', -\frac{3}{8}'')$.

678. [1] A Torus is formed by the revolution of a circle of $2''$ diameter, about the axis $A(-6\frac{1}{2}'', -1\frac{1}{2}'', -4'')$ $B(-6\frac{1}{2}'', -1\frac{1}{2}'', 0'')$. The circle in its initial position is parallel to V with its center at the point $O(-7\frac{3}{4}'', -1\frac{1}{2}'', -2'')$. Find a plane S tangent to the surface at a point on the lower portion of the surface, whose H projection is at $(-8\frac{1}{4}'', -\frac{3}{4}'', 0'')$.

679. [1] Find a plane R tangent to the surface of Prob. 678, through the line $K(-8\frac{3}{4}'', -3\frac{1}{2}'', -\frac{1}{2}'')$ $L(-10\frac{3}{4}'', -\frac{3}{4}'', -2\frac{5}{8}'')$.

680. [1] (Ground line parallel to short edge of sheet.) A Torus is formed by the revolution of a circle of $2\frac{1}{4}''$ diameter about the axis $A(-3\frac{3}{4}'', -5'', -4\frac{1}{2}'')$ $B(-3\frac{3}{4}'', 0'', -4\frac{1}{2}'')$. The circle in its initial position is parallel to H with its center at the point $O(-6\frac{1}{8}'', -3'', -4\frac{1}{8}'')$. Find a plane Q tangent to the surface through the point $R(-6\frac{1}{2}'', y'', -6'')$ on the upper part of the surface.

## TO FIND POINTS WHERE LINES PIERCE SURFACES.

### Right Prisms and Pyramids.

685. [2] Assume P at $+9$. Find the points where line A$(-12'', -1\frac{1}{8}'', -2\frac{1}{4}'')$ B$(-15\frac{3}{4}'', -2\frac{3}{8}'', -\frac{3}{4}'')$ pierces the right prism of Prob. 725.

686. [2] Assume P at $+9$. Find where the line C$(-12\frac{1}{4}'', -1\frac{1}{4}'', -3\frac{7}{8}'')$ D$(-15'', -1\frac{3}{4}'', -1\frac{3}{4}'')$ pierces the right prism of Prob. 726.

687. [2] Find the points where line E$(-2\frac{5}{8}'', +2\frac{1}{2}'', +\frac{1}{2}'')$ F$(-5\frac{1}{4}'', +1'', +1\frac{7}{8}'')$ pierces the right pyramid of Prob. 730.

688. [2] Find where the line G$(-2\frac{3}{8}'', +1\frac{3}{8}'', +1\frac{7}{8}'')$ H$(-5\frac{1}{2}'', +3'', +\frac{1}{2}'')$ cuts the right pyramid of Prob. 730.

### Oblique Prisms and Pyramids.

689. [2] Find where the line J$(-3\frac{1}{4}'', +\frac{3}{4}'', +3'')$ K$(-5\frac{3}{8}'', +2\frac{3}{8}'', +\frac{1}{2}'')$ pierces the oblique prism of Prob. 727.

690. [2] Find the pts. where line L$(-3\frac{7}{8}'', +3\frac{1}{2}'', +1'')$ K$(-6\frac{1}{4}'', -\frac{1}{4}'', +1\frac{3}{4}'')$ pierces the oblique prism of Prob. 727.

691. [2] Assume P at $+9$. Find where the line A$(-11\frac{5}{8}'', -\frac{1}{8}'', -3\frac{3}{8}'')$ B$(-13\frac{7}{8}'', -2\frac{3}{8}'', -1\frac{7}{8}'')$ pierces the oblique pyramid of Prob. 731.

692. [2] Assume P at $+9$. Find the points where line C$(-11\frac{1}{4}'', +1\frac{1}{4}'', +\frac{3}{8}'')$ D$(-13\frac{3}{4}'', +2'', +3'')$ pierces the oblique pyramid of Prob. 732.

### Right Cylinders and Cones.

693. [2] Assume P at $+9$. Find the points where the right cylinder of Prob. 734 is pierced by the line A$(-11\frac{3}{4}'', +3\frac{1}{4}'', +3\frac{1}{2}'')$ B$(-15\frac{1}{8}'', +\frac{1}{2}'', +1\frac{1}{4}'')$.

694. [2] Find where line C$(-2'', -1'', -3\frac{1}{4}'')$ D$(-5\frac{3}{4}'', -1\frac{7}{8}'', -\frac{7}{8}'')$ pierces the right cylinder of Prob. 736.

695. [2] P at $-3\frac{1}{2}''$. Find where line E$(-\frac{1}{2}'', -\frac{3}{8}'', -3\frac{1}{2}'')$ F$(-3\frac{1}{4}'', -3\frac{1}{2}'', -\frac{1}{4}'')$ pierces the right cylinder of Prob. 738.

696. [2] Assume P at $+8\frac{1}{2}''$. Find where the line G$(-11\frac{1}{2}'', +1'', +\frac{3}{4}'')$ K$(-15\frac{1}{8}'', +3'', +2\frac{7}{8}'')$ pierces the right cone of Prob. 747.

697. [2] Assume P at $+8\frac{1}{2}''$. Find where the right cone of Prob. 748 is pierced by the line A$(-11'', +\frac{3}{4}'', -\frac{1}{2}'')$ B$(-14\frac{1}{2}'', +4\frac{1}{8}'', +2\frac{1}{8}'')$.

698. [2] P at $-2''$. Find where line C$(-\frac{7}{8}'', -3\frac{1}{2}'', -2\frac{3}{8}'')$ D$(-4\frac{3}{4}'', +\frac{1}{2}'', -3\frac{7}{8}'')$ pierces the right cone of Prob. 752.

### Oblique Cylinders and Cones.

699. [2] Assume P at $+8''$. Find where line E$(-10\frac{1}{8}'', -\frac{1}{2}'', -1'')$ F$(-13\frac{3}{4}'', -2\frac{3}{8}'', -4\frac{1}{2}'')$ pierces the oblique cylinder of Prob. 740.

700. [2] P at $0''$. Find the points where the oblique cylinder of Prob. 741 is pierced by line A$(-2\frac{1}{2}'', -1'', -4\frac{1}{4}'')$ B$(-6\frac{1}{4}'', -4'', -1'')$.

701. [2] Assume P at $+9''$. Find the points in which the oblique cylinder of Prob. 743 is pierced by line C$(-11'', +4\frac{1}{2}'', +3'')$ D$(-15'', +1\frac{1}{4}'', +\frac{1}{2}'')$.

702. [2] Assume P at $+8''$. Find where line A$(-9\frac{3}{4}'', +\frac{3}{4}'', -1\frac{1}{2}'')$ B$(-12\frac{3}{4}'', -2\frac{1}{4}'', -3\frac{5}{8}'')$ pierces the oblique cone of Prob. 763.

703. [2] Assume P at $+8\frac{1}{2}''$. Find where line C$(-10\frac{5}{8}'', -1\frac{1}{2}'', -4'')$ D$(-14\frac{1}{4}'', +\frac{1}{4}'', -1\frac{3}{8}'')$ pierces the oblique cone of Prob. 764.

704. [2] Assume P at $+8\frac{1}{2}''$. Find the points in which the oblique cone of Prob. 765 is pierced by the line E$(-10\frac{3}{8}'', -\frac{3}{8}'', -3'')$ F$(-13\frac{3}{4}'', -3'', -4'')$.

**Warped Surfaces.**

705. [2] Assume P at $+4\frac{1}{2}''$. Find where the line $A(-5\frac{1}{2}'', -3\frac{3}{4}'', -4\frac{5}{8}'')$ $B(-10\frac{3}{4}'', -\frac{5}{8}'', -2'')$ pierces the hyperbolic paraboloid of Prob. 795.

706. [2] Assume P at $+5\frac{1}{4}''$. Find where the line $C(-10\frac{1}{2}'', -3\frac{3}{4}'', -4\frac{1}{8}'')$ $D(-12\frac{1}{2}'', -\frac{1}{2}'', -\frac{3}{4}'')$ pierces the hyperbolic paraboloid of Prob. 793.

707. [2] Find where the hyperboloid of Prob. 806 is pierced by line $E(-6\frac{3}{4}'', -1'', -5'')$ $F(-2\frac{3}{4}'', -1\frac{5}{8}'', +1\frac{7}{8}'')$.

708. [2] Assume P at $+7''$. Find where the hyperboloid of Prob. 805 is pierced by the line $A(-8\frac{1}{2}'', +4\frac{1}{4}'', +\frac{3}{4}'')$ $B(-13\frac{1}{2}'', +\frac{5}{8}'', +2\frac{3}{4}'')$.

709. [2] Assume P at $+7\frac{1}{2}''$. Find where line $C(-9\frac{5}{8}'', +1'', -\frac{1}{8}'')$ $D(-14\frac{1}{8}'', +3\frac{3}{4}'', +4'')$ pierces the helicoid of Prob. 811.

710. [2] Find where the helicoid of Prob. 812 is pierced by the right line $A(-1\frac{3}{4}'', -\frac{1}{2}'', -1'')$ $B(-5\frac{7}{8}'', -3\frac{1}{4}'', -3\frac{3}{4}'')$.

**Double Curved Surfaces.**

711. [2] Find where line $A(-3'', +1'', +1\frac{1}{4}'')$ $B(-6\frac{1}{2}'', +2\frac{1}{8}'', +4\frac{1}{2}'')$ pierces the sphere of Prob. 767.

712. [2] Find where the sphere in Prob. 768 is pierced by the right line $C(-\frac{1}{4}'', +\frac{5}{8}'', +1\frac{3}{8}'')$ $D(-5'', -4'', -3'')$.

713. [2] Find where the ellipsoid of Prob. 770 is pierced by a line conveniently assumed.

714. [2] Find the points in which the ellipsoid of Prob. 773 is pierced by the line $E(-1\frac{7}{8}'', +3\frac{1}{8}'', +3\frac{1}{2}'')$ $F(-6\frac{3}{8}'', +2\frac{1}{2}'', +\frac{3}{8}'')$.

715. [2] Find where line $A(-2\frac{1}{4}'', -\frac{3}{8}'', -2\frac{5}{8}'')$ $B(-5\frac{1}{2}'', -2\frac{3}{4}, -\frac{3}{4}'')$ pierces the paraboloid of Prob. 775.

716. [2] Find where the torus of Prob. 779 is pierced by the right line $C(-2\frac{1}{2}'', +4\frac{1}{8}'', +1\frac{1}{4}'')$ $D(-7'', +\frac{1}{2}'', +2\frac{3}{8}'')$.

717. [2] Find the points in which the given right line $K(-1\frac{1}{4}'', -\frac{7}{8}'', -\frac{7}{8}'')$ $M(-6\frac{3}{8}'', -4\frac{3}{8}'', -2\frac{5}{8}'')$ pierces the torus of Prob. 780.

## I. INTERSECTIONS OF SURFACES AND PLANES.

### 1.—PRISMS CUT BY PLANES, AND DEVELOPMENT.

725. [1] The line M($-14''$, $-1\frac{3}{4}''$, $-4''$) N($-14''$, $-1\frac{3}{4}''$, $0''$) is the axis of a regular hexagonal prism, whose upper base is in H with center at the point N. Each side of the base is $1\frac{1}{4}''$, and two sides are parallel to the ground line. The prism is cut by a plane T($-11\frac{1}{4}''$, $+120°$, $-135°$). Find the intersection of the plane and the prism, the actual size of the section when swung into H, and the development (pattern) of that part of the prism between the planes H and T. Develop prism base along the ground line, beginning at a point ($-9''$) with the shortest element and developing to the right and below the ground line. (State problem in upper right portion of sheet.)

726. [1] The line M($-13\frac{1}{2}''$, $-1\frac{1}{2}''$, $-4''$) N($-13\frac{1}{2}''$, $-1\frac{1}{2}''$, $0''$) is the axis of a regular square prism, whose base is in a plane $4''$ below H and parallel to H. The center of the square base is at the point M, each of the sides is $1\frac{1}{4}''$ long, and two of them when extended make angles of $+60°$ with the ground line. The prism is cut off by the plane T($-9\frac{3}{4}''$, $+135°$, $-150°$). Find the intersection of the plane and the prism, the actual size of the section when swung into V, and the development (pattern) of the prism, between T and the plane $4''$ below H. Develop the prism base on the line $4''$ below the ground line, beginning with the shortest edge at a point $4\frac{1}{2}''$ to the right of m′ and developing to the right and above the base line. (State problem in upper right hand portion of sheet.)

727. [1] The line M($-6''$, $+1\frac{1}{2}''$, $+3\frac{1}{2}''$) N($-3\frac{1}{2}''$, $+2''$, $0''$) is the axis of a triangular prism whose base is an equilateral triangle in H. This triangle is inscribed in a circle of $2\frac{1}{2}''$ diameter and center at N, with its side nearest to V parallel to the ground line. The prism is cut by the plane T($-7\frac{1}{2}''$, $-45°$, $+30°$). Find the intersection of the plane and prism, the true size of the section when swung into H, and the development (pattern) of that part of the prism between T and H. (Develop the prism in the upper left hand portion of the sheet, and state the problem in the lower left hand portion.)

728. [2] Find the intersection of that portion of a plane included between the right lines M($-6\frac{1}{4}''$, $+\frac{7}{8}''$, $+\frac{5}{8}''$) N($-4\frac{1}{4}''$, $-\frac{5}{8}''$, $+3\frac{3}{4}''$) and O($-5\frac{1}{2}''$, $+2\frac{1}{4}''$, $0''$) P($-3\frac{1}{4}''$, $+\frac{5}{8}''$, $+4''$) with the prism made up of lines A($-5\frac{1}{8}''$, $+\frac{1}{2}''$, $+2\frac{3}{4}''$) E($-1\frac{1}{2}''$, $+\frac{1}{2}''$, $+2\frac{1}{4}''$) and the lines B($-5\frac{3}{4}''$, $+1''$, $+\frac{3}{4}''$) F and C($-4\frac{3}{8}''$, $+2\frac{1}{2}''$, $+\frac{3}{4}''$) D, drawn parallel to AE through the points B and C.

729. [2] The line M($-5''$, $0''$, $-2''$) N($-2\frac{1}{2}''$, $-3\frac{1}{2}''$, $-1\frac{1}{2}''$) is the axis of a square prism whose base is in V, center at point M, with 2 of its $3''$ sides parallel to the G. L. Find the intersection of this prism with an opaque plane T($-1''$, $+150°$, $-135°$), indicating visible and invisible edges.

### 2.—PYRAMIDS CUT BY PLANES AND DEVELOPMENT.

730. [1] The line M($-4''$, $+2''$, $+3\frac{1}{4}''$) N($-4''$, $+2''$, $0''$) is the axis of a regular hexagonal pyramid. Its base in H has sides $1\frac{1}{4}''$ long, two of these sides being parallel to V. The point M is the vertex. The pyramid is cut by the plane T($-8\frac{1}{4}''$, $-45°$, $+30°$). Find the intersection of the plane and the pyramid, the actual size of this section when swung into H, and the development (pattern)

of the pyramid, showing the intersection. (Develop pyramid in upper left hand portion of the sheet, and state problem in lower left hand portion.)

731. [1] The point M($-11\frac{1}{4}''$, $-\frac{1}{2}''$, $-1''$) is the vertex of a pyramid which is cut by a plane T($-16''$, $+30°$, $-45°$). The base of the pyramid is a 2″ square in a plane 4″ below H and parallel to H. The center of the square is the point O($-12\frac{1}{2}''$, $-1\frac{1}{2}''$, $-4''$) and two of its sides are parallel to the H trace of plane T. Find the intersection of the plane and the pyramid, the actual size of this section when swung into H, and the development (pattern) of the pyramid showing the intersection. (Develop pyramid in upper right hand portion of the sheet, and state problem in lower right hand portion.)

732. [1] The point O($-12''$, $-3''$, $-1\frac{1}{2}''$) is the vertex of a pyramid which is cut by a plane T($-9\frac{1}{2}''$, $+150°$, $-120°$). The base of the pyramid in V is an equilateral triangle inscribed in a circle of 2″ diameter, whose center is at the point M($-13\frac{1}{2}''$, $0''$, $-1\frac{1}{2}''$). The upper side of this base is parallel to H. Find the intersection of the plane and the pyramid, the actual size and shape of the section when swung into V, and the development (pattern) of the pyramid, showing the intersection. (Develop the pyramid in the upper right hand portion of the sheet, and state the problem in the lower right hand portion.)

733. [1] P at $-7''$. Find 3 projections and the intersection of the right square pyramid, having an altitude of 5″ and having line A($-5\frac{1}{2}''$, $-\frac{3}{4}''$, z) B($-7''$, $-2\frac{1}{4}''$, z) in plane T($-6\frac{1}{4}''$, $+120°$, $-67\frac{1}{2}°$) for one side of its base which is in plane T and does not cross its trace, with the opaque parallelogram E($-3''$, $-1\frac{1}{2}''$, $-3''$) F($-5''$, $-1''$, $-\frac{3}{4}''$) G($-6''$, $-4\frac{1}{2}''$, $-1\frac{1}{4}''$) H.

## 3.—RIGHT CYLINDERS CUT BY PLANES.

### Curve of intersection, true size, and development.

734. [1] The line M($-14''$, $+2''$, $0''$) N($-14''$, $+2''$, $+4''$) is the axis of a right cylinder, whose circular base of 3″ diameter is in H. The cylinder is cut by the plane T($-11\frac{1}{4}''$, $-112\frac{1}{2}°$, $+135°$). Find the curve of the intersection of the plane and the cylinder, the true size of this curve when swung into H, and the development of that part of the cylinder between H and T. Develop the cylinder base along the ground line, beginning at a point ($-10\frac{1}{2}''$) with the shortest cylinder element, and developing to the right and above the ground line. (State the problem in lower right hand portion of sheet.)

735. [1] The line M($-14''$, $-2''$, $-4''$) N($-14''$, $-2''$, $0''$) is the axis of a right cylinder whose circular base of 3″ diameter is in a plane parallel to H and 4″ below H. The cylinder is cut by the plane T($-15''$, $+120°$, $-45°$). Find the curve of intersection of the plane and the cylinder, the true size of this curve when swung into H, and the development of that part of the cylinder between T and the horizontal plane 4″ below H. Develop the cylinder base on a line parallel to the ground line and 4″ below it, beginning at a point $10\frac{1}{2}''$ to the left of the right hand border line. Begin with the shortest cylinder element and develop to the right and above the base line. (State the problem in upper right hand portion of sheet.)

736. [1] The line M($-4''$, $-1\frac{1}{2}''$, $-4''$) N($-4''$, $-1\frac{1}{2}''$, $0''$) is the axis of a right cylinder whose upper base is an ellipse in H. The major and minor axes of the ellipse intersect at the point N and are respectively $2\frac{1}{2}''$ and $1\frac{1}{2}''$ in length. The major axis is parallel to the H trace of the plane S($-9\frac{1}{4}''$, $+30°$, $-22\frac{1}{2}°$) which cuts the cylinder. Find the curve of intersection of the plane and the cylinder, the true size of the curve when swung into H, and the development of that part of the cylinder between H and T. Develop the cylinder base along the ground line, beginning at a point ($-9\frac{3}{4}''$) with the shortest element and develop

to the left and below the ground line. (State problem in upper left hand portion of sheet.)

737. [1] The line M(– 3″, – 4″, – 2″) N(– 3″, 0″, – 2″) is the axis of a right cylinder, whose circular base of 2″ diameter is in V. The cylinder is cut by a plane T(– 6″, + 45°, – 60°). Find the curve of intersection of the plane and the cylinder, the true size of this curve when swung into V, and the development of that part of the cylinder between V and T. Develop the cylinder base along the ground line, beginning at a point (– 8½″) with the shortest cylinder element and developing to the left and above the ground line. (State problem in lower left hand portion of sheet.)

738. [1] Profile plane at – 10″. The line M(– 5″, – 2″, – 2″) N(0″, – 2″, – 2″) is the axis of a right cylinder, whose circular base of 2½″ diameter is in P. The cylinder is cut by a plane T(– ¾″, + 120°, – 120°). Find the curve of intersection of the plane and the cylinder, the true size of the curve when swung into H, and the development of that part of the cylinder between P and T. Develop the cylinder base along the ground line, beginning at a point (– 8½″) with the shortest element, and developing to the right and above the ground line. (State problem in lower right hand portion of sheet.)

## 4.—OBLIQUE CYLINDERS CUT BY RIGHT SECTION PLANES AND DEVELOPMENT.

739. [1] (Place ground line 4½″ below top edge of sheet.) The point N(– 12″, + 2¼″, 0″) is the center of the circular base in H of an oblique cylinder in the first quadrant. The diameter of this base is 3″. The elements of the cylinder are such that their H and V projections when extended makes angles of – 30° and + 60° respectively with the ground line. The cylinder is cut by a right section plane R whose traces meet the ground line at (– 7½″, 0″, 0″). Find the H and V projection of the curve of intersection of plane and cylinder, the true size of the right section when swung into H, and the development of that portion of the cylinder between H and T. (Develop cylinder in upper right hand portion of the sheet, and state problem in lower right hand portion.)

740. [1] The point N(– 13″, 0″, – 1½″) is the point of intersection of the major and minor axes of the elliptical base in V of an oblique cylinder in the third quadrant. These axes are 4″ and 2″ in length respectively and when extended make angles of – 30° and – 120° with the ground line. The horizontal and vertical projections of the elements of the cylinder make angles of + 45° and – 30° with the ground line respectively. The cylinder is cut by a right section plane R, whose traces intersect the ground line at (– 9″, 0″, 0″). Find the H and V projections of the curve of intersection of plane and cylinder, the true size of the right section when swung into V, and the development of that portion of the cylinder between V and T. (Develop cylinder in upper right hand portion of sheet. State problem in lower right hand portion.)

741. [1] P at – 8½″. The point N(– 5½″, – 1½″, – 5″) is the center of the circular base of 3″ diameter of an oblique cylinder. This base is in a horizontal plane 5″ below H and the cylinder stands in the third quadrant. Its elements are such that their H and V projections make angles of + 30° and – 135° respectively with the ground line. The cylinder is cut by a right section plane R whose traces meet the ground line at (– 4″, 0″, 0″). Find the H, V and P projections of the cylinder and curve of intersection of the cylinder and plane, the true size of this

section when swung into H, and the development of that part of the cylinder between its base and R. (Develop cylinder in upper right hand portion of sheet. State problem in lower right hand portion.)

## 5.—OBLIQUE CYLINDERS CUT BY OBLIQUE PLANES AND DEVELOPMENT.

742. [1] The line M(−14″, +1½″, 0″) N(−10½″, +3½″, +3½″) is the axis of an oblique cylinder, whose right section is a circle of 2″ diameter. The cylinder is cut by a plane T(−6″, −135°, +135°). Find the base of the cylinder in H, the curve of intersection of the plane T and the cylinder, and the development of that part of the cylinder between H and the plane T. (Develop cylinder in upper right hand portion of sheet; state problem in lower right hand portion.)

743. [1] The point N(−12″, +1¾″, 0″) is the center of the circular base in H of an oblique cylinder. The diameter of this base is 3″ and the cylinder stands in the first quadrant. The H and V projections of the cylinder elements make angles of −150° and +120° respectively with the ground line. The cylinder is cut by two planes, one the plane T(−15½″, −90°, +45°) and the other a right section plane R through the same point in the ground line. Find the projection of the curves of intersection of the planes and the cylinder and the development of that portion of the cylinder between T and R. (Develop cylinder in the upper right hand portion of the sheet; state the problem in lower right hand portion.)

744. [1] The point N(−13″, −1½″, −4″) is the center of the circular base of 2″ diameter of an oblique cylinder. This base is in a horizontal plane 4″ below H and the cylinder stands in the third quadrant. The H and V projections of the cylinder elements make angles of +45° and −120° with the ground line respectively. The cylinder is cut by a plane T(−15″, +90°, −45°) and by a right section plane R(−13″, +135°, −30°). Find the projection of the curves of intersection of the planes and the cylinder, and the development of that portion of the cylinder between T and R. (Develop cylinder in upper right hand portion of sheet; state problem in lower right hand portion.)

745. [1] The point N(−11″, −1⅛″, 0″) is the point of intersection of the axes of the elliptical base in H of an oblique cylinder which is located in the third quadrant. The major and minor axes of the top base are respectively 2″ and 1½″ in length, the former being parallel to the ground line. The H and V projections of the elements of the cylinder make angles of +135° and −120° respectively with the ground line. The cylinder is cut by a plane T(−16″, +60°, −45°) and by a right section plane through a point (−14½″, 0″, 0″) in the ground line. Find the curves of intersection of these planes and the cylinder, and the development of that part of the cylinder between T and H. (Develop cylinder in upper right hand portion of sheet, stating problem in lower right hand portion.)

746. [1] P at −9″. The line M(−7″, −3½″, −3½″) N(0″, −1¼″, −1½″) is the axis of an oblique cylinder situated in the third quadrant, whose base in P is a circle of 2″ diameter. This cylinder is cut by the plane T(−7″, +60°, −60°) and by a right section plane R through a point (−3½″, 0″, 0″) on the ground line. Find the curves of intersection between these planes and the cylinder, and the development of that part of the cylinder between T and P. (Develop cylinder in upper right hand portion of sheet, state problem in lower right hand portion.)

## 6.—RIGHT CONES CUT BY PLANES AND DEVELOPMENT.

747. [1] The line M($-12''$, $+2\frac{3}{4}''$, $+4\frac{1}{2}''$) N($-12''$, $+2\frac{3}{4}''$, $0''$) is the axis of a right circular cone in the first quadrant, whose vertex is at M and whose base of $4\frac{1}{2}''$ diameter is in H with its center at N. This cone is cut by a plane T($-9''$, $-90°$, $+150°$). Find the H and V projections of the curve of intersection of the plane and cone, the true size of this curve, and the development of the cone, showing the intersection.

748. [1] The line M($-13\frac{1}{2}''$, $+2\frac{1}{2}''$, $+3\frac{5}{8}''$) N($-13\frac{1}{2}''$, $+2\frac{1}{2}''$, $0''$) is the axis of a right circular cone, whose vertex is at M and whose circular base of $3''$ diameter is in H with its center at N. The cone is cut by a plane T($-10\frac{1}{4}''$, $-112\frac{1}{2}°$, $+150°$). Find the H and V projections of the curve of intersection of the plane and the cone, the true size of this section when swung into H and the development of that portion of the curve between the plane T and H. (Develop the cone in the right hand portion of the sheet, placing the vertex at a point ($-6\frac{1}{2}''$) on the ground line. State problem in upper central part of sheet.)

749. [1] The line M($-13\frac{1}{2}''$, $+2''$, $+4\frac{1}{2}''$) N($-13\frac{1}{2}''$, $+2''$, $0''$) is the axis of a right circular cone, whose vertex is at M and whose circular base of $3\frac{1}{2}''$ diameter is in H with its center at the point N. The cone is cut by the plane T($-10\frac{1}{2}''$, $-120°$, $+150°$). Find the H and V projections of the curve of intersection of the cone and the plane, the true size of this section when swung into H, and the development of that part of the cone between H and T. (Develop the cone in the right hand portion of the sheet, placing the vertex at a point ($-5\frac{1}{2}''$) on the ground line. State problem in the upper central part of sheet.

750. [1] P at $-9\frac{1}{2}''$. The line M($-4\frac{1}{4}''$, $-4\frac{1}{4}''$, $-1\frac{1}{2}''$) N($-4\frac{1}{4}$, $0''$, $-1\frac{1}{2}''$) is the axis of a cone whose vertex is at the point M and whose base is an ellipse in V, with axes $2\frac{1}{2}''$ and $1\frac{1}{2}''$ respectively in length, intersecting at the point N. The major axis of this base is parallel to the ground line. The cone is cut by a plane T($+1''$, $+157\frac{1}{2}°$, $-150°$). Find the three projections of the cone, and the curve of intersection of the cone and plane, the true size of the section when swung into V, and the development of that part of the cone between the vertex and T. (Develop cone in upper right hand portion of sheet, stating problem in lower right hand portion.)

751. [1] P at $-7\frac{1}{2}''$. The line M($-6''$, $-3\frac{1}{2}''$, $-2''$) N($-6''$, $0''$, $-2''$) is the axis of a right circular cone whose vertex is at the point M and whose circular base of $3\frac{1}{2}''$ diameter is in V at the point N. The cone is cut by a plane T($-3''$, $+150°$, $-120°$). Find the three projections of the cone, and the line of intersection of the cone and plane, the true size of the section when swung into H, and the development of that part of the cone between the vertex, the plane T, and V. (Develop cone in upper right hand portion of sheet, stating problem in the lower right hand portion.)

752. [1] P at $-5\frac{3}{4}''$. The line M($-2\frac{5}{8}''$, $-2''$, $-\frac{1}{2}''$) N($-2\frac{5}{8}''$, $-2''$, $-4''$) is the axis of a right circular cone, whose vertex is at the point M and whose circular base of $3\frac{1}{4}''$ diameter is located in a horizontal plane $4''$ below H with its center at the point N. The cone is cut by the plane T($-5\frac{7}{8}''$, $+60°$, $-45°$). Find the three projections of the cone and the line of intersection of the cone and the plane, the true size of the section when swung into H, and the development of that portion of the cone between its base and T. (Develop the cone in the left hand portion of the sheet, placing the vertex at a point ($-6\frac{1}{2}''$) on the ground line. State problem in upper right hand part of sheet.)

753. [1] P at $-9\frac{1}{2}''$. The line M($-2\frac{1}{2}''$, $-1\frac{1}{2}''$, $-\frac{1}{4}''$) N($-2\frac{1}{2}''$, $-1\frac{1}{2}''$, $-4''$) is the axis of a right circular cone whose vertex is at the point M and whose circular base of $2''$ diameter is located in a horizontal plane $4''$ below H with its center at

the point N. The cone is cut by the plane T(−6″, +45°, −45°). Find the 3 projections of the cone and curve of intersection of cone and plane T, the true size of this section when swung into H, and the development of that part of the cone between its base and the plane T. (Develop cone in upper right hand portion of sheet. State problem in lower right hand portion.)

754. [1] P at −11″. The line M(−2½″, −3″, −1¾″) N(−2½″, 0″, −1¾″) is the axis of a right circular cone, whose vertex is at the point M and whose circular base of 2½″ diameter is in V with its center at the point N. The cone is cut by the plane T(∞, −2½″, −3¾″). Find the 3 projections of the cone and the curve of intersection between the cone and the plane, the true size of the curve of intersection when swung parallel to P and the development of that part of the cone between its base and the plane T. (Develop the cone in the upper right hand portion of the sheet. State the problem in the lower right hand portion.)

755. [1] P at −11″. The line M(−2½″, −1¾″, 0″) N(−2½″, −1¾″, −4″) is the axis of a right circular cone, whose vertex is at the point M and whose circular base of 3″ diameter is located in a horizontal plane 4″ below H with its center at the point N. The cone is cut by the plane T(∞, −¾″, +2″). Find the 3 projections of the cone and curve of intersection of cone and plane, the true size of the section when swung into the plane of the cone base, and the development of that part of the cone between its vertex, the plane T and the plane of its base. (Develop the cone in the upper right hand portion of sheet; state problem in lower right hand portion.)

756. [1] Profile plane at −11″. A right circular cone has its base of 3″ diameter in the profile plane, and its axis parallel to the ground line through the vertex O(−5″, −2″, −1¾″). It is cut by the plane T(−5″, +60°, −45°). Find (1) the 3 projections of the curve of intersection of cone and plane, (2) the development of the cone, showing this intersection.

757. [1] Profile plane at −10″. A right circular cone has its base of 3″ diameter in the profile plane, and its axis parallel to the ground line through the vertex O(−5″, −2½″, −2½″). It is cut by the plane T(−4⅞″, +60°, −45°). Find (1) the 3 projections of the curve of intersection of cone and plane, (2) the development of the cone, showing this intersection.

## 7.—OBLIQUE CONES CUT BY SPHERES AND DEVELOPMENT.

758. [1] The point O(−10″, −3½″, −4½″) is the vertex of an oblique cone and the point M(−13¼″, 0″, −2″) the center of its circular base of 2½″ diameter in V. The cone is cut by a sphere of 6½″ diameter whose center is at the vertex of the cone. Find the curve of intersection and develop that part of the cone between the sphere and V. (Develop cone in upper right hand portion of sheet. State problem in lower right hand portion.)

759. [1] The point O(−14″, +2¾″, +2¾″) is the vertex of an oblique cone and the point M(−10¾″, +3″, 0″) is the point of intersection of the axes of its elliptical base in H. These axes are respectively 4¾″ and 3½″ in length, the major axis being parallel to the ground line. The cone is intersected by a sphere of 5″ diameter whose center is at the vertex of the cone. Find the line of intersection, and develop that part of the cone between the sphere and H. (Develop cone in upper right hand portion of sheet; state problem in lower right hand portion.)

760. [1] The point O(−10″, −4½″, −¼″) is the vertex of an oblique cone, and the point M(−13″, −2″, −4″) the center of its circular base of 3″ diameter, in a horizontal plane 4″ below H. The cone is cut by a sphere of 6″ diameter whose center is at the vertex of the cone. Find the curve of intersection and develop that part of the cone between the sphere and its base. (Develop in upper right hand portion of the sheet. State problem in lower right hand portion.)

## 8.—OBLIQUE CONES CUT BY PLANES AND DEVELOPMENT.

761. [1] The line M($-8\frac{3}{4}''$, $+2\frac{3}{4}''$, $+4''$) O($-11\frac{3}{4}''$, $+1\frac{3}{4}''$, $0''$) is the axis of an oblique cone, whose vertex is the point M and whose circular base of $2\frac{1}{2}''$ diameter is in H and its center at the point O. The cone is cut by a plane T($-15''$, $-55°$, $+20°$). Find the projections of the curve of intersection, the true size of the section, and the development of the cone showing the curve of intersection.

762. [1] The line M($-12''$, $+2''$, $+3''$) O($-12\frac{3}{4}''$, $+2''$, $0''$) is the axis of an oblique cone whose vertex is the point M and whose circular base of $3\frac{1}{2}''$ diameter is in H with its center at the point O. The cone is cut by a plane T($-10''$, $-120°$, $+150°$). Find the projections of the curve of intersection, the true size of this section, and the development of the cone, showing the curve of intersection.

763. [1] The line M($-10''$, $-4''$, $-4''$) O($-12''$, $0''$, $-1\frac{1}{2}''$) is the axis of an oblique cone, whose vertex is the point M and whose circular base of $3''$ diameter is in V with its center at the point O. The cone is cut by the plane T($-15''$, $+30°$, $-60°$). Find the projections of the curve of intersection, the true size of the section, and the development of the cone showing the curve of intersection.

764. [1] The point M($-15\frac{1}{2}''$, $-2\frac{1}{2}''$, $-4\frac{1}{2}''$) is the vertex of an oblique cone, and the axes of its elliptical base in V intersect at the point O($-12''$, $0''$, $-1\frac{1}{2}''$). These axes are respectively $3''$ and $2''$ in length, the former being parallel to the ground line. The cone is cut by a plane T($-15\frac{1}{2}''$, $+22\frac{1}{2}°$, $-52\frac{1}{2}°$). Find the projections of the curve of intersection, the true size of this section, and the development of this cone showing the curve of intersection.

765. [1] The point M($-15\frac{3}{4}''$, $-\frac{1}{2}''$, $-\frac{1}{2}''$) is the vertex of an oblique cone whose circular base of $2\frac{1}{2}''$ diameter is in a horizontal plane $4\frac{1}{2}''$ below H with its center at the point O($-11\frac{1}{2}''$, $-3''$, $-4\frac{1}{2}''$). The cone is cut by a plane T($-7\frac{1}{2}''$, $+120°$, $-150°$). Find the projections of the curve of intersection, the true size of this section, and the development of that part of the cone between its base and the plane T.

766. [1] The point M($-15\frac{3}{4}''$, $-2\frac{1}{2}''$, $-\frac{1}{4}''$) is the vertex of an oblique cone, whose base is a circle of $4''$ diameter located in a plane parallel to and $4\frac{1}{2}''$ below H, with its center at the point O($-11\frac{1}{2}''$, $-2\frac{1}{2}''$, $-4\frac{1}{2}''$). The cone is cut by a plane T($-8''$, $+90°$, $-135°$). Find the projections of the curve of intersection, the true size and shape of this curve, and the development of the cone between the vertex, the plane T and the plane of the base.

## 9.—SPHERES CUT BY PLANES.

767. [2] A sphere of $4''$ diameter is located in the first quadrant with its center at the point O($-5\frac{1}{2}''$, $+2\frac{1}{4}''$, $+2\frac{1}{2}''$). Find the curve of intersection of this sphere with a plane R($-1''$, $-135°$, $+135°$).

768. [2] A sphere of $3''$ diameter rests upon a horizontal plane in the third quadrant at the point M($-3\frac{1}{2}''$, $-2''$, $-3\frac{1}{4}''$). Find the intersection of the sphere with a plane R($-5''$, $+60°$, $-120°$).

769. [2] P at $-3\frac{1}{2}''$. A sphere of $2\frac{1}{2}''$ diameter is located in the third quadrant with its center at the point O($-1\frac{3}{4}''$, $-1\frac{1}{2}''$, $-1\frac{3}{4}''$). Find the curve of intersection of this sphere and a plane R($\infty$, $-3''$, $-1\frac{1}{2}''$).

## 10.—ELLIPSOIDS.

**Cut by planes; true size of curve of intersection.**

770. [2] An ellipsoid of revolution is formed in the third quadrant by the rotation about its vertical major axis of an ellipse whose axes are respectively 3″ and 2″. The ellipsoid is cut by a plane R which passes through the middle point of its vertical axis and makes an angle of 30° therewith. Find (1) the curve of intersection between the surface and the plane R, (2) the true size of this curve.

771. [2] An ellipsoid of revolution is formed in the third quadrant by the rotation about its vertical minor axis of an ellipse whose axes are 3″ and $1\frac{3}{4}$″ respectively. The ellipsoid is cut by a plane R which intersects the vertical axis at a point $\frac{1}{2}$″ below its highest point and makes an angle of 45° therewith. Find (1) the curve of intersection between the surface and the plane R, (2) the true size of this curve.

772. [2] An ellipsoid of revolution is formed in the third quadrant by the rotation about its vertical major axis of an ellipse whose axes are 4″ and $2\frac{1}{2}$″ respectively. The ellipsoid is cut by the plane R which intersects its vertical axis at a point $\frac{1}{2}$″ below its highest point and makes angles of 60° and 30° respectively with H and V. Find (1) the curve of the intersection between ellipsoid and plane R, (2) the true size of this curve.

773. [2] An ellipsoid of revolution, axes 6″ and 3″ respectively, has its center at the point O($-4\frac{1}{4}$″, +2″, 0″), and its long axis perpendicular to H. Find (1) the intersection of the ellipsoid with a plane R($-2\frac{1}{4}$″, −90°, +135°), (2) the true size of this curve of intersection.

## 11.—PARABOLOIDS AND HYPERBOLOIDS OF REVOLUTION.

**Intersection by planes; true size of curves of intersection; lines tangent to intersection curves.**

775. [2] The line A($-5\frac{1}{2}$″, $-2\frac{1}{4}$″, $-\frac{1}{2}$″) B($-1$″, $-2\frac{1}{4}$″, $-\frac{1}{2}$″) is the directrix and the point F($-3\frac{1}{2}$″, $-2\frac{1}{4}$″, $-1$″) the focus of a parabola which is the generatrix of a Paraboloid of Revolution, formed by rotating the parabola about its axis. Find (1) the intersection of this paraboloid with a plane R($-5\frac{1}{2}$″, $+67\frac{1}{2}$°, −45°), (2) the true size of this curve of intersection, (3) a line tangent to the curve of intersection at its lowest point.

776. [2] Find (1) the curve of intersection of the Paraboloid in Prob. 775 with a plane R, parallel to V and $\frac{3}{4}$″ in front of the axis of the paraboloid, (2) the true shape of this curve.

777. [2] A hyperbola, in a plane parallel to V, has its foci at the points F($-4\frac{1}{2}$″, $-2\frac{1}{2}$″, $-1\frac{3}{4}$″) and G($-4\frac{1}{2}$″, $-2\frac{1}{2}$″, $-3\frac{1}{4}$″) and its vertices at the points V($-4\frac{1}{2}$″, $-2\frac{1}{2}$″, $-2$″) and W($-4\frac{1}{2}$″, $-2\frac{1}{2}$″, $-3$″). This hyperbola spins about its vertical transverse axis and generates a Hyperboloid of Revolution. Find (1) the curve of intersection of this surface with the plane R($-5\frac{1}{4}$″, +90°, $-67\frac{1}{2}$°), (2) the true size and shape of this curve, (3) a line PX tangent to the curve of intersection at the highest point of that portion of the curve on the lower nappe of the surface.

778. [1] The line A($-8\frac{1}{2}$″, $-2$″, $-4$″) B($-8\frac{1}{2}$″, $-2$″, 0″) is the directrix and the point F($-7\frac{1}{2}$″, $-2$″, $-2$″) the focus of a parabola which is the generatrix of a Paraboloid of Revolution with AB as its axis. Find (1) the intersection of this paraboloid with a plane R($-7$″, +105°, −120°), (2) the true shape of that branch of the curve nearest the H trace of R.

## 12.—TORUS.

**Intersection by plane; tangent line to curve of intersection at given point.**

779. [2] A Torus is formed by the revolution of a circle of $1\frac{1}{2}''$ diameter about the axis $A(-4\frac{3}{4}'', +2\frac{3}{4}'', +4'')$ $B(-4\frac{3}{4}'', +2\frac{3}{4}'', 0'')$. The circle in its initial position is parallel to V with its center at the point $O(-6\frac{1}{4}'', +2\frac{3}{4}'', +1\frac{3}{4}'')$. Find (1) the intersection of the torus with the plane $R(-1\frac{3}{4}'', -120°, +120°)$, (2) a line tangent to the curve of intersection at that point P on the upper portion of said surface which is 1″ in front of V.

780. [2] A Torus is formed by the revolution of a circle of $1\frac{3}{4}''$ diameter about the axis $A(-3\frac{1}{2}'', -2\frac{3}{4}'', -3'')$ $B(-3\frac{1}{2}'', -2\frac{3}{4}'', 0'')$. The circle in its initial position is parallel to V with its center at the point $O(-4\frac{7}{8}'', -2\frac{3}{4}'', -1\frac{5}{8}'')$. Find (1) the intersection of the torus with the plane $R(-7\frac{3}{4}'', +60°, -45°)$, (2) a line tangent to the curve of intersection at that point P on the upper portion of the surface which is $1\frac{1}{2}''$ behind V.

781. [1] A Torus is formed by the revolution of a circle of 2″ diameter, about the axis $A(-6\frac{1}{2}'', -1\frac{1}{2}'', -4'')$ $B(-6\frac{1}{2}'', -1\frac{1}{2}'', 0'')$. The circle in its initial position is parallel to V with its center at the point $O(-7\frac{3}{4}'', -1\frac{1}{2}'', -2'')$. Find (1) the intersection of the torus with a plane $R(-13\frac{1}{2}'', +17\frac{1}{2}°, -34\frac{1}{2}°)$, (2) the true size of this curve of intersection.

782. [1] (G. L. par. to short edge of sheet.) A Torus is formed by the revolution of a circle of $2\frac{1}{4}''$ diameter about the axis $A(3\frac{3}{4}'', -5'', -4\frac{1}{2}'')$ $B(-3\frac{3}{4}'', 0'', -4\frac{1}{2}'')$. The circle in its initial position is parallel to H with its center at the point $O(-6\frac{1}{8}'', -3'', -4\frac{1}{2}'')$. Find (1) the intersection of the torus with a plane $R(-10\frac{3}{4}'', +45°, -60°)$, (2) a line tangent to the curve of intersection at its highest point.

## 13.—SQUARE RING.

**Cut by plane; true size of curve of intersection.**

783. [1] The axis of a Square Ring is the line $M(-13'', +2\frac{1}{2}'', +\frac{1}{2}'')$ $N(-13'', +2\frac{1}{2}'', +3'')$. The generatrix is a $1\frac{1}{2}''$ square with 2 sides parallel to H, whose center moves in a horizontal circle of 3″ diameter in a plane $1\frac{3}{4}''$ above H. Find (1) the intersection of the ring with a plane $T(-8\frac{1}{2}'', -90°, +157\frac{1}{2}°)$, (2) the true size of this intersection when swung into H.

784. [2] The axis of a Square Ring is the line $M(-5\frac{1}{2}'', +2\frac{1}{2}'', +\frac{1}{2}'')$ $N(-5\frac{1}{2}'', +2\frac{1}{2}'', +3'')$. The generatrix is a $1\frac{1}{2}''$ square with 2 sides parallel to H, whose center moves in a horizontal circle of 3″ diameter in a plane $1\frac{3}{4}''$ above H. Find the intersection of the square ring and a plane $T(-\frac{1}{2}'', -150°, +135°)$.

785. [2] The axis of a Square Ring is the line $M(-4\frac{1}{4}'', -2\frac{3}{4}'', -\frac{1}{4}'')$ $N(-4\frac{1}{4}'', -2\frac{3}{4}'', -2\frac{1}{2}'')$. The generatrix is a $1\frac{3}{4}''$ square with 2 sides parallel to H, whose center moves in a circle of $3\frac{1}{4}''$ diameter in a plane parallel to H and $1\frac{3}{8}''$ below it. Find the intersection of this square ring with the plane $T(-7'', +45°, -45°)$.

## 14.—HYPERBOLIC PARABOLOIDS.

**Assuming elements; intersection of surface by planes; true size of intersection curves.**

794. [2] The lines $M(-6'', +\frac{3}{4}'', 0'')$ $N(-4'', +2'', +2'')$ and $P(-2'', +1'', 0'')$ $Q(-1'', -1\frac{1}{4}'', +1\frac{3}{4}'')$ are the directrices of a Hyperbolic Paraboloid whose plane directer is H. Find the intersection of this surface with the plane $T(-6\frac{1}{2}'', -60°, +30°)$ and the true size of this intersection.

795. [2] The lines M$(-6'', +\frac{3}{4}'', 0'')$ N$(-4'', +2'', +2'')$ and P$(-2'', +1'', 0'')$ Q$(-1'', -1\frac{1}{4}'', +1\frac{3}{4}'')$ are the directrices of a Hyperbolic Paraboloid whose plane directer is H. Find the intersection of this surface with V.

796. [1] The two right lines M$(-13\frac{1}{2}'', +4\frac{1}{2}'', +3\frac{1}{2}'')$ N$(-11\frac{1}{2}'', +1'', 0'')$ and P$(-8\frac{1}{2}'', 0'', +3'')$ Q$(-5\frac{1}{2}'', +5\frac{1}{4}'', 0'')$ are the directrices of a Hyperbolic Paraboloid, whose plane directer is D$(-13\frac{1}{2}'', -150°, +120°)$. Find (1) nine elements of the first generation through points on the directrix MN which divide it into 8 equal parts, (2) the projections of the intersection of the Hyperbolic Paraboloid as determined by these elements with the plane T$(-11'', -60°, +120°)$, (3) the true size of this curve of intersection when swung into H.

797. [1] The two right lines M$(-12'', -5\frac{1}{4}'', -\frac{1}{2}'')$ N$(-6\frac{1}{4}'', -3'', -4\frac{1}{4}'')$ and P$(-11\frac{1}{4}'', -1'', -4'')$ Q$(-7\frac{3}{4}'', -1'', -1\frac{3}{4}'')$ are the directrices of a Hyperbolic Paraboloid. The lines MQ and PN are elements of the first generation. Find (1) thirteen elements of the first generation through points on the directrix PQ which divide it into 12 equal parts, (2) the projections of the intersection of the Hyperbolic Paraboloid as determined by these elements and the plane T$(-6'', +157\frac{1}{2}°, -90°)$, (3) the true size of this curve of intersection when swung into H.

798. [1] The two right lines M$(-12\frac{1}{2}'', -5'', -3'')$ N$(-12\frac{1}{2}'', 0'', -3'')$ and P$(-8\frac{1}{2}'', 0'', -1\frac{1}{2}'')$ Q$(-5\frac{1}{2}'', -5'', -4\frac{1}{2}'')$ are the directrices of a Hyperbolic Paraboloid whose plane directer is V. Find (1) eleven elements of the first generation through points on the directrix MN which divide it into ten equal parts, (2) the projections of the intersection of the Hyperbolic Paraboloid as determined by these elements, with the plane T$(-13\frac{1}{2}'', +45°, -45°)$, (3) the true size of this section when swung into V.

799. [1] The two right lines M$(-12'', 0'', -1'')$ N$(-9'', -3\frac{1}{2}'', -3\frac{1}{2}'')$ and P$(-7'', 0'', -2'')$ Q$(-5\frac{1}{2}'', -3\frac{1}{2}'', -2\frac{1}{4}'')$ are the directrices of a Hyperbolic Paraboloid whose plane directer is V. Find (1) nine elements of the first generation through points on the directrix MN which divide it into 8 equal parts, (2) the projections of the curve of intersection of the Hyperbolic Paraboloid and the plane T$(-8\frac{1}{2}'', +135°, -60°)$, (3) the true size of this curve of intersection.

800. [2] The two right lines A$(-6\frac{1}{2}'', -\frac{1}{2}'', -\frac{1}{4}'')$ B$(-5'', -2'', -4'')$ and C$(-3'', -\frac{1}{4}'', -3\frac{1}{2}'')$ D$(-\frac{1}{2}'', -4'', -2'')$ are directrices of a Hyperbolic Paraboloid, of which BC and AD are elements. Find 13 other elements of the same generation and the intersection of the surface with the plane T$(-4\frac{1}{2}'', +90°, -70°)$.

801. [2] The two right lines A$(-6\frac{1}{2}'', -\frac{1}{2}'', -\frac{1}{4}'')$ D$(-\frac{1}{2}'', -4'', -2'')$ and B$(-5'', -2'', -4'')$ C$(-3'', -\frac{1}{4}'', -3\frac{1}{2}'')$ are directrices of a Hyperbolic Paraboloid of which AB and CD are elements. Find seventeen other elements of the same generation and the intersection of this surface with the plane T$(-6'', +90°, -45°)$.

802. [2] The two right lines A$(-6\frac{1}{2}'', -\frac{1}{2}'', -\frac{1}{4}'')$ B$(-5'', -2'', -4'')$ and C$(-3'', -\frac{1}{4}'', -3\frac{1}{2}'')$ D$(-\frac{1}{2}'', -4'', -2'')$ are directrices of a Hyperbolic Paraboloid of which AC and BD are elements. Find thirteen other elements of the same generation and the intersection of the surface with a plane T$(-6'', +90°, -60°)$.

803. [2] The two right lines A$(-6\frac{1}{2}'', -\frac{1}{2}'', -\frac{1}{4}'')$ B$(-5'', -4'', -2'')$ and C$(-3'', -3\frac{1}{2}'', -\frac{1}{4}'')$ D$(-\frac{1}{2}'', -2'', -4'')$ are directrices of a Hyperbolic Paraboloid of which AC and BD are elements. Find thirteen other elements of this same generation, and the intersection of the surface thus determined with a plane T$(-7\frac{1}{4}'', +60°, -60°)$.

## 15.—HYPERBOLOIDS OF REVOLUTION OF ONE NAPPE.

**Assuming elements; intersection by oblique planes.**

804. [1] The line A(− 9″, − 3½″, − 2¼″) B(− 9″, 0″, − 2¼″) is the axis of a Hyperboloid of Revolution of one Nappe, located in the third quadrant with its base in V. The generatrix in its initial position is M(− 11″, 0″, − 1¾″) N(− 9″, − 1¾″, − 1¾″). Find (1) 32 elements of one generation of the surface, which pierce V at equal intervals around the circumference of its base, (2) the projections and true size of the curve of intersection between the surface and a plane T(− 14¼″, + 25°, − 45°).

805. [1] The line A(− 11″, + 2¾″, + 5″) B(− 11″, + 2¾″, 0″) is the axis of a Hyperboloid of Revolution of one Nappe which stands in the first quadrant with its base in H. The generatrix in its initial position is M(− 13½″, + 2″, 0″) N(− 11″, + 2″, + 2½″). Find (1) 32 elements of one generation of the surface which pierce H at equal intervals around the circumference of its base, (2) the vertical projection of the meridian section parallel to V, (3) the projections and true size of the curve of intersection between the surface and a plane T(− 12¾″, − 75°, + 45°).

806. [2] The line A(− 5″, − 2″, − 4″) B(− 5″, − 2″, 0″) is the axis of a Hyperboloid of Revolution of one Nappe located in the third quadrant with its upper and lower bases respectively in H and in a horizontal plane 4″ below H. The generatrix of this surface is, in its initial position, the line M(− 6½″, − 1½″, − 4″) N(− 5″, − 1½″, − 2″). Find (1) 32 elements of one generation of the surface, which pierce H at equal intervals around the circumference of its base, (2) the projections and true size of the curve of intersection of the surface and a plane T(− 10.85″, + 90°, − 120°).

807. [2] A Hyperboloid of Revolution of one Nappe stands in the 1st quadrant with its base of 4″ diameter in H at the point O(− 3¼″, + 2¼″, 0″). The circle of the gorge of 2½″ diameter is in a horizontal plane 1¼″ above H, with its center directly above O. Find 32 elements of the surface and the intersection of the surface thus determined with the plane T(− 8″, − 54°, + 23°).

808. [1] (G. L. par. to short edges of sheet.) A portion of a Hyperboloid of Revolution of one Nappe is generated by the revolution of the line M(− 6⅜″, + 1⅜″, + ¾″) N(− 4⅛″, − 4¾″, + 5¼) about the line A(− 5½″, + 3″, + ¾″) B(− 5½″, + 3″, + 5¼″) as an axis. Assume 32 elements of the surface and find the intersection of the surface thus determined with plane T(− 10⅜″, − 45°, + 45°).

809. [1] (G. L. par. to short edges of sheet.) Find the intersection of the surface determined in the above problem with a plane R(− 10½″, − 60°, + 39°).

810. [1] (G. L. par. to short edges of sheet.) Find the intersection of the surface determined in the above problem with a plane S(− 10″, − 52°, + 38°).

## 16.—HELICOIDS.

**Oblique and right. Assume elements; intersections with oblique planes, or with H or V; true shape of curves of intersection.**

811. [1] The line A(− 12″, + 2″, + 4″) B(− 12″, + 2″, 0″) is the axis of an oblique Helicoid; the generatrix in initial position is M(− 13½″, + 2″, 0″) N(− 12″, + 2″, + 1½″) which moves in such a way that its horizontal projection appears to rotate counter-clockwise. The pitch of the helix which is generated by the point M is 2″ . Find (1) sixteen elements of the surface generated during one complete movement of the generatrix about the axis, (2) the intersection of the surface thus determined with the H plane of projection, (3) the projections

and true size of the curve of intersection between the surface thus determined and the plane T($-9\frac{3}{4}''$, $-90°$, $+150°$).

812. [2] The line A($-4\frac{1}{4}''$, $-1\frac{3}{4}''$, $-4''$) B($-4\frac{1}{4}''$, $-1\frac{3}{4}''$, $0''$) is the axis of an oblique Helicoid, whose generatrix in initial position is M($-5\frac{1}{2}''$, $-1\frac{3}{4}''$, $-4''$) N($-4\frac{1}{4}''$, $-1\frac{3}{4}''$, $-1\frac{3}{4}''$). This generatrix moves in such a way that its H projection appears to rotate clockwise and the point M generates a helix whose pitch is $2\frac{1}{2}''$. Find (1) sixteen elements of the surface generated during 1 complete movement of the generatrix about the axis, (2) the intersection of the surface thus determined with a horizontal plane 4″ below H, (3) the projections and true size of the curve of intersection between the surface thus determined and the plane T($-8\frac{3}{4}''$, $+90°$, $-30°$).

813. [1] The line A($-10\frac{1}{2}''$, $-4''$, $-2''$) B($-10\frac{1}{2}''$, $0''$, $-2''$) is the axis of a Right Helicoid whose generatrix in its initial position is determined by the points M($-9''$, $0''$, $-2''$) and N($-10\frac{1}{2}''$, $0''$, $-2''$). This generatrix moves in such a way that its V projection appears to rotate clockwise, and the point M generates a helix whose pitch is 2″. Find (1) 32 elements of the surface, generated while the generatrix swings about the axis twice, (2) the projections of the curve of intersection between the surface thus determined and plane T($-7''$, $+135°$, $-135°$). Determine and mark the asymptotes to the projections of the intersection curve in both H and V.

814. [1] The line A($-9''$, $-2\frac{1}{2}''$, $0''$) B($-9''$, $-2\frac{1}{2}''$, $-5''$) is the axis of a Right Helicoid, whose generatrix in its initial position, is determined by the points M($-11\frac{1}{2}''$, $-2\frac{1}{2}''$, $-5''$) and N($-9''$, $-2\frac{1}{2}''$, $-5''$). This generatrix moves in such a way that its H projection appears to rotate counter-clockwise, while the point M generates a helix whose pitch is $2\frac{1}{2}''$. Find (1) sixty-four elements of the surface, generated while MN swings about the axis twice, (2) the curve in which the surface thus determined intersects the vertical plane of projection. Determine and mark the asymptotes to this curve.

815. [1] (G. L. par. to short edges of sheet.) An Oblique Helicoid is given in Prob. 610. Find its intersection with H, and with a plane T($-10''$, $-67\frac{1}{2}°$, $+30°$).

816. [2] Find the intersection of the Oblique Helicoid of Prob. 611, (a) with the H plane of projection, (b) with a horizontal plane $1\frac{1}{4}''$ above H.

817. [2] The cast iron marking post in Fig. 46 is to be cut off by a plane T, which intersects the axis $1' - 1\frac{1}{2}''$ below the top of the post and makes an angle of 30° with said axis. Find the projections of the curve of intersection and the true size and shape of the section formed. Scale, $1\frac{1}{2}'' = 1' - 0''$.

818. [2] One side of the marble pillar cap of Fig. 47 was injured and in order to use the cap as an ornament in another place, it was cut off by the plane T, which intersects the axis at a point $2' - 8''$ above the bottom plane of the cap and makes an angle of 30° with the axis. With scale, $\frac{3}{4}'' = 1' - 0''$, find the projections of the intersection, and the true size of the section formed.

819. [2] Assume a convenient scale for the mortar shown in Fig. 48 whose outer surface is an Hyperboloid of revolution of one nappe and whose interior is partly conical, partly spherical as indicated. Find the projections of the mortar, and the true size of the intersection of the mortar with an oblique plane cutting the axis at a convenient angle.

820. [1] G. L. par. to short edge of sheet. The cast iron snubbing post shown in Fig. 46 is cut by a plane T($-18'6''$, $+67\frac{1}{2}°$, $-60°$). Find the line of intersection. The axis of the post is the line A($-11'\,0''$, $-8'\,6''$, 0) B($-11'\,0''$, $-8'\,6''$, $-16'\,0''$) and its base stands on a plane which is $14'\,4\frac{1}{2}''$ below H. Draw to scale of $2'' = 1'\,0''$.

## SHORTEST DISTANCE BETWEEN POINTS ON SURFACES.

### Prisms and Pyramids.

825. [1] Find the shortest distance on the surface from the point $A(-14\frac{7}{8}'', y, -2\frac{1}{2}'')$ on the front to the point $B(-13'', y, -\frac{1}{4}'')$ on the back of the right prism of Prob. 725.

826. [1] Find the projections of the shortest line that can be drawn on the surface from the point on the back of the right prism of Prob. 726 vertically projected at $A(-14'', 0'', -3\frac{1}{2}'')$ to the point on the front vertically projected at $B(-12\frac{7}{8}'', 0'', -2'')$.

827. [1] Find the shortest distance on the surface from the point $K(-3\frac{3}{8}'', +1\frac{1}{4}'', z)$ to the point $L(-4\frac{1}{2}'', +2'', z)$ lying on different faces of the oblique prism of Prob. 727.

828. [1] Find the projections of the shortest line lying on the surface of the right pyramid of Prob. 730, joining the points on its surface horizontally projected at $A(-3\frac{3}{8}'', +2\frac{3}{4}'', 0'')$ and $B(-4\frac{1}{4}'', +1\frac{1}{4}'', 0'')$.

829. [1] Find the shortest distance along the surface from the point $C(-11\frac{1}{4}'', -\frac{3}{4}'', z)$ to the point $D(-13\frac{1}{8}'', -1\frac{1}{4}'', z)$ on the surface of the oblique pyramid of Prob. 731.

830. [1] Find the projections of the shortest line that can be drawn on the surface of the oblique pyramid of Prob. 732 from point $E(-13\frac{1}{2}'', y, -1\frac{1}{8}'')$ to $F(-12\frac{3}{8}'', y, -1\frac{5}{8}'')$ on the front face.

### Cylinders and Cones.

831. [1] Find the projections of the shortest line that can be drawn on the surface from the point $A(-15'', y, +2'')$ on the front to the point $B(-13'', y, +\frac{7}{8}'')$ on the back of the right cylinder of Prob. 734.

832. [1] Find the shortest distance on the surface of the right cylinder of Prob. 736 from the point $C(-4\frac{3}{4}'', y, -\frac{3}{8}'')$ on the back of the surface to the point $D(-3\frac{1}{4}'', y, -1\frac{1}{4}'')$ on the front of the surface.

833. [1] P at $-10''$. Find the shortest distance on the surface of the right cylinder of Prob. 738 from the point $E(-3'', -2\frac{3}{8}'', z)$ on the bottom to point $F(-\frac{7}{8}'', -1\frac{1}{4}'', z)$ on top of the cylinder.

834. [1] Find the projections of the shortest line that can be drawn on the surface of the oblique cylinder of Prob. 739 from the point $A(-12'', +3'', z)$ on the top to the point $B(-9\frac{1}{2}'', +2\frac{3}{4}'', z)$ on the bottom of the cylinder.

835. [1] Find the shortest distance along the surface from the point $A(-10\frac{1}{2}'', y, -2\frac{1}{8}'')$ on the front to point $B(-12\frac{7}{8}'', y, -2'')$ on the back of the oblique cylinder of Prob. 740.

836. [1] P at $-8\frac{1}{2}''$. Find the projections of the shortest line that can be drawn on the surface of the oblique cylinder of Prob. 741 from the point $C(-5\frac{1}{4}'', -2\frac{1}{2}'', z)$ on the top to point $D(-3\frac{1}{8}'', -1\frac{1}{2}'', z)$ on the under side of the surface.

837. [1] Find the shortest distance from point $A(-10\frac{7}{8}'', +\frac{7}{8}'', z)$ on the top to point $B(-12\frac{1}{8}'', +3\frac{1}{4}'', z)$ on the bottom of the oblique cylinder of Prob. 743.

838. [1] Find the projections of the shortest line that can be drawn on the surface of the right cone given in Prob. 747 from $C(-10\frac{1}{2}'', +2\frac{5}{8}'', z)$ to $D(-12\frac{1}{2}'', +4'', z)$.

839. [1] P at $-5\frac{3}{4}''$. Find the projections of the shortest line that can be drawn on the surface of the right cone of Prob. 752 from point $E(-3\frac{5}{8}'', -1\frac{1}{4}'', z)$ to point $F(-2'', -2\frac{1}{2}'', z)$.

840. [1] P at $-11''$. Draw the projections of the shortest line that can be drawn on the surface of the right cone of Prob. 756 from point $A(-\frac{7}{8}'', -2\frac{5}{8}'', z)$ on the top to point $B(-3\frac{3}{8}'', -1\frac{3}{4}'', z)$ on the under side of the surface.

841. [1] Find the shortest distance on the surface from point $C(-12\frac{1}{2}'', y, -3'')$ on the front to point $D(-11\frac{3}{4}'', y, -2\frac{3}{8}'')$ on the back of the oblique cone of Prob. 758.

842. [1] Find the shortest distance on the surface of the oblique cone of Prob. 759 from the point $E(-10\frac{1}{4}'', +2'', z)$ on the top to point $F(-13\frac{1}{2}'', +3'', z)$ on the bottom of the surface.

**Spheres.**

843. [2] Find the projections of the shortest line that can be drawn on the surface of the sphere of Prob. 767 from point $A(-6'', y, +1\frac{1}{2}'')$ on the front to point $B(-4\frac{7}{8}'', y, +3\frac{5}{8}'')$ on the back of the surface.

844. [2] Find the shortest distance on the surface of the sphere of Prob. 768 from point $C(-4'', -1\frac{1}{8}'', z)$ on the top to point $D(-2\frac{3}{4}'', -2\frac{3}{4}'', z)$ on the bottom of the surface.

845. [2] P at $-3\frac{1}{2}''$. Find the projections of the shortest line that can be drawn on the surface of the sphere of Prob. 769 between point $E(-2\frac{1}{2}'', y, -1\frac{3}{8}'')$ on the front and point $F(-1\frac{1}{4}'', y, -2\frac{1}{4}'')$ on the back of the surface.

## II. INTERSECTIONS OF TWO SURFACES.

### 1.—INTERSECTION OF TWO CONES.

**Intersection curves; line tangent to said curve, or development of one cone.**

850. [1] (Take ground line parallel to short edge of sheet.) The axis of an oblique cone is the line A($-3\frac{1}{2}''$, $+\frac{3}{8}''$, $+6''$) B($-6\frac{3}{4}''$, $+3\frac{1}{2}''$, $0''$). The base of this cone is an ellipse in H with center at B, and axes $3\frac{1}{2}''$ and $2\frac{1}{2}''$ respectively, the latter being at right angles to the H projection of the cone axis. The line C($-6\frac{3}{8}''$, $+2\frac{1}{4}''$, $+3\frac{1}{2}''$) D($-2\frac{1}{2}''$, $+2\frac{3}{4}''$, $0''$) is the axis of another oblique cone, whose circular base of $3\frac{3}{4}''$ diameter is in H with its center at D. Find (1) the intersection of these 2 cones, (2) a line tangent to the intersection at some convenient point.

851. [1] The line A($-7\frac{1}{2}''$, $-\frac{1}{2}''$, $0''$) B($-11\frac{1}{2}''$, $-2''$, $-4''$) is the axis of the oblique cone whose vertex is at A and whose circular base of $3''$ diameter is in a horizontal plane $4''$ below H with its center at B. The line C($-10''$, $0''$, $-1\frac{1}{4}''$) D($-7\frac{1}{2}''$, $-3''$, $-4''$) is the axis of another cone, whose vertex is at C and whose circular base of $3''$ diameter is in the same horizontal plane, with its center at D. Find (1) the intersection of these 2 cones, (2) a line tangent to the curve of intersection at a point of that element of cone AB which is parallel to V.

852. [1] A right circular cone stands in the third quadrant on a horizontal plane $5''$ below H, with the center of its circular base (diameter $3''$) at the point B($-11''$, $-2''$, $-5''$). Its altitude is $4\frac{1}{2}''$. The line C($-12''$, $-1\frac{1}{4}''$, $-1\frac{1}{2}''$) D($-9\frac{1}{2}''$, $-2\frac{1}{2}''$, $-5''$) is the axis of an intersecting oblique cone, whose circular base of $4''$ diameter is in the same horizontal plane, with its center at the point D. Find (1) the intersection of these two cones, (2) the development of the right cone showing the intersection.

853. [1] A right circular cone of $3\frac{3}{4}''$ altitude stands on H with the center of its circular base of $2\frac{1}{4}''$ diameter at the point B($-13''$, $+2''$, $0''$). It is intersected by an oblique cone whose vertex is at the point C($-15\frac{1}{2}''$, $+2''$, $+5''$) and whose circular base of $3''$ diameter is in H, with its center at D($-12\frac{1}{2}''$, $+2''$, $0''$). Find (1) the intersection of the two cones, (2) the development of the right cone, showing this intersection.

854.[1] P at $-6''$. A right circular cone has its circular base of $3''$ diameter in the profile plane and its axis parallel to the ground line through the vertex O($-5''$, $-2''$, $-2''$). Another right circular cone has its base of $2\frac{1}{2}''$ diameter these two cones.

855. [1] The line A($-11\frac{1}{4}''$, $+4\frac{1}{4}''$, $+1''$) B($-7\frac{1}{8}''$, $0''$, $+3\frac{1}{4}''$) is the axis of a cone whose vertex is at A and whose base is a $3\frac{1}{8}''$ circle in V with center at B. Line C($-11\frac{1}{4}''$, $+1\frac{1}{4}''$, $+4\frac{1}{4}''$) D($-7\frac{1}{8}''$, $+1\frac{3}{4}''$, $0''$) is the axis of a second cone whose vertex is at C and base a $2\frac{1}{2}''$ circle in H with center at D. Find the curve of intersection of the two cones.

## 2.—INTERSECTION OF TWO CYLINDERS.

**Intersection curves, development of one cylinder or line tangent to curve of intersection.**

856. [1] One cylinder cuts clear through another. The line A($-10''$, $+3''$, $+2\frac{1}{2}''$) B($-7''$, $0''$, $+2\frac{1}{4}''$) is the axis of a cylinder whose circular base of $2\frac{1}{2}''$ diameter is in V with its center at the point B. The line A M($-11\frac{5}{8}''$, $+1\frac{1}{2}''$, $0''$) is the axis of another cylinder whose axis intersects that of the first cylinder at A and whose circular base of $1\frac{3}{4}''$ diameter is in H with its center at the point M. Find (1) the intersection between these two cylinders, (2) the development of the larger cylinder showing the intersection.

857. [1] The line A($-11''$, $-4\frac{1}{4}''$, $-1\frac{1}{4}''$) B($-14\frac{1}{2}''$, $-2\frac{1}{4}''$, $-4\frac{3}{4}''$) is the axis of a cylinder whose circular base of $3''$ diameter is in a horizontal plane $4\frac{3}{4}''$ below H with its center at the point B. A second cylinder has the line C($-14''$, $-5''$, $-\frac{3}{4}''$) D($-11''$, $-1\frac{3}{8}''$, $-4\frac{3}{4}''$) for its axis and its circular base of $2\frac{1}{4}''$ diameter is in the same horizontal plane as the base of the first, with its center at the point D. Find (1) the intersection of the two cylinders, (2) the development, showing this intersection, of the larger cylinder between the base and a right section taken above the intersection of the two cylinders.

858. [1] A line AB passing through the point A($-12\frac{1}{2}''$, $+3''$, $+3''$) and making angles of 45° with H and 30° with V respectively, is the axis of an oblique cylinder whose base of $1\frac{1}{2}''$ diameter is in H. A line D($-12\frac{1}{2}''$, $+3''$, $+2''$) E($-9\frac{5}{8}''$, $+1''$, $0''$) is the axis of another cylinder whose circular base of $3\frac{1}{2}''$ diameter is in H with its center at E. Find (1) the intersection between these cylinders, (2) the development of the smaller cylinder.

859. [1] The line A($-8\frac{7}{8}''$, $-3''$, $-4''$) B($-11''$, $0''$, $-1\frac{7}{8}''$) is the axis of an oblique cylinder whose circular base of $2''$ diameter is in V with its center at B. The line C($-8\frac{7}{8}''$, $-2''$, $-3''$) D($-6''$, $0''$, $-1''$) is the axis of another cylinder whose circular base is $3\frac{1}{2}''$ in diameter, and is in V with its center at D. Find (1) the intersection of these two cylinders, (2) a line tangent to the intersection at a point on the highest element of the smaller cylinder.

860. [1] (Take the ground line parallel to short edge of sheet.) The line A($-5\frac{1}{2}''$, $+\frac{1}{2}''$, $+5''$) B($-7\frac{1}{2}''$, $+7''$, $0''$) is the axis of a cylinder whose circular base of $2\frac{1}{4}''$ diameter is in H with its center at B. The line C($-7\frac{1}{2}''$, $+1\frac{1}{2}''$, $+4\frac{3}{4}''$) D($-3\frac{7}{8}''$, $+5''$, $0''$) is the axis of another cylinder whose base is an ellipse in H with its center at D. The axes of this ellipse are $4\frac{1}{2}''$ and $3\frac{3}{4}''$ respectively and the minor axis is at right angles to the H projection of the cylinder axis. Find (1) the intersection of the two cylinders, (2) a line tangent to this intersection at some convenient point P.

861. [1] Partially cutting. The line A($-13''$, $-4\frac{1}{2}''$, $-1\frac{1}{4}''$) B($-10\frac{1}{2}''$, $0''$, $-1\frac{7}{8}''$) is the axis of a cylinder of circular right section of $2''$ diameter whose base is in V. The line C($-11''$, $-3\frac{5}{8}''$, $-1\frac{3}{4}''$) D($-14\frac{5}{8}''$, $0''$, $-2\frac{3}{4}''$) is the axis of another cylinder whose circular base of $2''$ diameter is in V with its center at D. Find (1) the intersection between these two cylinders, (2) the development of the first mentioned cylinder.

862. [1] The line A($-10''$, $-1\frac{1}{2}''$, $0''$) B($-14\frac{1}{2}''$, $-1\frac{1}{2}''$, $-4\frac{1}{2}''$) is the axis of an oblique cylinder, whose circular base of $2''$ diameter is in a horizontal plane $4\frac{1}{2}''$ below H with its center at the point B. The line C($-13\frac{5}{8}''$, $+2\frac{1}{8}''$, $0''$) D($-11''$, $-2\frac{1}{4}''$, $-4\frac{1}{2}''$) is the axis of another cylinder whose circular base of $4''$. diameter is in the same horizontal plane with its center at D. Find (1) the intersection of these 2 cylinders, (2) the development of the smaller cylinder.

863. [2] A right circular cylinder in the 3rd quadrant has its upper base of 3″ diameter in H with its center at the point A(− 6″, − 1½″, 0″) and its axis perpendicular to H. Another cylinder has a circular upper base of 3″ diameter in H and its center at the point B(− 7″, − 2″, 0″). Its axis is in a plane parallel to V and the vertical projection of this axis makes an angle of 45° with that of the axis of the first cylinder. Find (1) the intersection of these 2 cylinders, (2) the development of the first cylinder, showing the intersection.

864. [2] A vertical cylindrical pipe, diameter 3″, intersects a horizontal cylindrical pipe, diameter 1½″. Their axes are 1″ apart. Find the projections of the curve of intersection, and develop one cylinder, showing this intersection.

865. [2] A horizontal cylindrical pipe, diameter 2¾″, is joined by vertical cylindrical pipe, diameter 1¼″. Their axes are ¾″ apart. Find the projections of the intersection curve, and develop one cylinder, showing this intersection curve.

866. [2] Draw the projections of a 135° elbow for a 2″ sheet iron pipe and develop one branch.

867. [2] Draw the projections of a Y intersection for a 5″ drain pipe and develop one branch (Scale, half size).

## 3.—INTERSECTION OF CONE AND CYLINDER.

**Curves of intersection; line tangent to said curves, or development of one surface.**

868. [1] (Take ground line parallel to short edge of sheet.) The point A(− 8½″, + ½″, + 6½″) is the vertex of an oblique cone whose elliptical base is in H with its center at the point B(− 3½″, + 5½″, 0″). The axes of this base are 5″ and 4″ respectively, the minor axis being at right angles to the H projection of the axis AB of the cone. The line C(− 5″, + ½″, + 5½″) D(− 6½″, + 6″, 0″) is the axis of an oblique cylinder whose base of 2″ diameter is in H with its center at D. Find (1) the intersection between the cone and cylinder, (2) a line tangent to the intersection curve at some convenient point.

869. [1] The point A(− 10″, − 4½″, − 5¼″) is the vertex of a cone which extends downward into the third quadrant from a circular base of 5″ diameter in H with its center at the point B(− 5¼″, − 2¾″, 0″). The line C(− 7″, − 5″, − 2½″) D(− 12″, 0″, − 2½″) is the axis of a cylinder whose circular base of 3″ diameter is in V at the point D. Find (1) the intersection between cone and cylinder, (2) a line tangent to the intersection curve at some convenient point.

870. [1] The point A(− 9″, − 5″, − ¾″) is the vertex of an oblique cone in the third quadrant, whose circular base of 3″ diameter is in V with its center at B(− 14″, 0″, − 3¾″). The line C(− 13¼″, − 5⅛″, 0″) D(− 10″, 0″, − 3¼″) is the axis of an oblique cylinder whose circular base of 3″ diameter is in V with its center at the point D. Find (1) the intersection between cone and cylinder, (2) the development of the cone, showing the intersection.

871. [1] An oblique cone has its vertex at the point A(− 9½″, − 3½″, − 5″) and its circular base of 4″ diameter in V with its center at the point B(− 13½″, 0, − 2½″). An intersecting oblique cylinder has the line C(− 14½″, − 3″, − 4⅞″) D(− 9½″, 0″, − 2″) as axis, its circular base of 2″ diameter being in V with its center at the point D. Find (1) the intersection between cylinder and cone, (2) the development of the cylinder, showing this intersection.

872. [1] The point A(− 11″, − 4½″, − 3½″) is the vertex of an oblique cone in the 3rd quadrant whose circular base of 3″ diameter is in V with its center at the point B(− 13½″, 0″, − 2″). The line C(− 13½″, − 3″, − 4½″) D(− 9¾″, − 1½″, 0″) is the axis of an oblique cylinder whose circular base of 2″ diameter is in H with

its center at the point D. Find (1) the intersection of cone and cylinder, (2) the development of the cylinder showing the intersection.

873. [1] An oblique cylinder in the 3rd quadrant has for its axis the line $A(-2'', -2'', -\frac{1}{2}'')$ $B(-6\frac{1}{2}'', -2'', -5'')$; its circular base of 3″ diameter is located in a horizontal plane 5″ below H with its center at the point B. An intersecting oblique cone has its circular base of $2\frac{1}{2}''$ diameter in the same horizontal plane with center at a point $D(-3\frac{1}{4}'', -2\frac{5}{8}'', -5'')$; its vertex is at the point $C(-5\frac{1}{2}'', -\frac{1}{4}'', -\frac{3}{4}'')$. Find (1) the intersection of cone and cylinder, (2) the development of the cylinder, showing this intersection.

874. [1] A right circular cone stands in the third quadrant on a horizontal plane 5″ below H. Its circular base of $3\frac{1}{2}''$ diameter has its center at the point $B(-4'', -2\frac{1}{2}'', -5'')$ its vertex being the point $A(-4'', -2\frac{1}{2}'', -\frac{1}{2}'')$. An oblique cylinder has the line $C(-6\frac{1}{8}'', -\frac{1}{2}'', -\frac{1}{2}'')$ $D(-3\frac{5}{8}'', -3'', -5'')$ as axis, with its circular base of 2″ diameter in the same horizontal plane as the cone, with its center at the point D. Find (1) the intersection of cone and cylinder, (2) the development of the cone, showing this intersection.

875. [1] A right circular cone stands in the third quadrant on a horizontal plane 5″ below H. Its circular base of 3″ diameter has its center at the point $B(-4'', -3\frac{1}{2}'', -5'')$, its vertex being the point $A(-4'', -3\frac{1}{2}'', -\frac{1}{2}'')$. An oblique cylinder has for its axis the line $C(-2'', -4\frac{7}{8}'', -1\frac{3}{4}'')$ $D(-7\frac{1}{4}'', -1\frac{7}{8}'', -5'')$ its circular base of $2\frac{1}{2}''$ diameter being in the horizontal plane above mentioned with its center at the point D. Find (1) the intersection of cone and cylinder, (2) the development of the cone, showing this intersection.

876. [1] An oblique cone has its vertex at the point $A(-13\frac{1}{2}'', +\frac{3}{4}'', +5\frac{3}{8}'')$ and its circular base of $2\frac{7}{8}''$ diameter in H with its center at point $B(-9\frac{5}{8}'', +3\frac{1}{2}'', 0'')$. An intersecting oblique cylinder has for its axis the line $C(-11'', +\frac{1}{4}'', +3\frac{1}{2}'')$ $D(-13'', +3\frac{7}{8}'', 0'')$, with its circular base of $2\frac{1}{8}''$ diameter in H with its center at the point D. Find (1) the intersection between the cone and cylinder, (2) the development of the cylinder showing this intersection.

877. [1] (Take ground line parallel to shorter edge of sheet and $\frac{1}{2}''$ above middle of sheet.) The line $A(-6\frac{1}{2}'', +6\frac{3}{4}'', +7'')$ $B(-3\frac{1}{4}'', +3\frac{5}{8}'', 0'')$ is the axis of an oblique cylinder whose circular base of 2″ diameter is in H with its center at the point B. An intersecting oblique cone has its vertex at the point $C(-2\frac{5}{8}'', +7'', +5\frac{1}{2}'')$ and an elliptical base in H with its center at the point $D(-7\frac{3}{4}'', +3'', 0'')$. The axes of this ellipse are respectively 5″ and 4″, the major axis being at right angles to the H projection of the cone axis CD. Find (1) the intersection of cone and cylinder, (2) a line tangent to the intersection at a point P which is $3\frac{1}{8}''$ from H, on that part of the curve of intersection which is visible in the V projection.

878. [1] (Ground line parallel to short edges of sheet, and one inch above the middle of sheet.) An oblique cone has its vertex at the point $A(-8'', +\frac{1}{2}'', +6\frac{1}{2}'')$ and the center of its elliptical base in H at the point $B(-3'', +5\frac{1}{2}'', 0'')$. The axes of this ellipse are respectively 5″ and 4″, the minor axis being at right angles to the H projection of the cone axis AB. The line $C(-5'', +1\frac{1}{4}'', +5\frac{1}{2}'')$ $D(-6\frac{1}{2}'', +7'', 0'')$ is the axis of an intersecting oblique cylinder whose circular base of $2\frac{1}{2}''$ diameter is in H with its center at the point D. Find (1) the intersection of cylinder and cone, (2) a line tangent to this intersection at some convenient point.

879. [1] (Ground line parallel to short edges of sheet and $1\frac{1}{2}''$ above middle of sheet.) An oblique cone has its vertex at the point $A(-7\frac{3}{4}'', -6\frac{1}{2}'', -\frac{1}{4}'')$ and the center of its elliptical base in V at the point $B(-2\frac{3}{4}'', 0'', -5'')$. The axes of the ellipse are respectively $4\frac{1}{2}''$ and $3\frac{3}{4}''$, the minor axis being at right angles

to the V projection of the cone axis AB. The line C($-4\frac{1}{2}''$, $-5''$, $-\frac{1}{2}''$) D($-6\frac{1}{2}''$, $0''$, $-7''$) is the axis of an intersecting oblique cylinder whose circular base of $2\frac{1}{4}''$ diameter is in V with its center at the point D. Find (1) the intersection of the cone and cylinder, (2) a line tangent to this intersection at some convenient point.

880. [1] Line A($-14\frac{1}{2}''$, $+2''$, $+3''$) B($-14\frac{1}{2}''$, $+2''$, $0''$) is the axis of a right circular cone vertex at A and center of $3''$ diameter at B. Line C($-14\frac{1}{2}''$, $+3\frac{1}{2}''$, $+1\frac{1}{2}''$) D($-11\frac{1}{8}''$, $0''$, $+1\frac{1}{2}''$) is the axis of a right circular cylinder of $2''$ diameter. Find (1) the base of cylinder in V, (2) the intersection between the two surfaces.

881. [1] An oblique cone has its vertex at the point A($-9\frac{1}{2}''$, $-3\frac{1}{2}''$, $-5''$) and its circular base of $4''$ diameter in V with its center at point B($-13\frac{1}{2}''$, $0''$, $-2\frac{1}{2}''$). An intersecting oblique cylinder has the line C($-14\frac{1}{2}''$, $-3''$, $-4\frac{5}{8}''$) D($-9\frac{1}{2}''$, $0''$, $-1\frac{3}{4}''$) as axis, its circular base of $2''$ diameter being in V with its center at the point D. Find (1) the intersection between cylinder and cone, (2) the development of the cone, showing this intersection.

882. [1] The point A($-11''$, $-4\frac{1}{2}''$, $-3\frac{1}{2}''$) is the vertex of an oblique cone in the third quadrant whose circular base of $3''$ diameter is in V with its center at point B($-13\frac{1}{2}''$, $0''$, $-2''$). The line C($-13\frac{1}{2}''$, $-3\frac{7}{8}''$, $-4\frac{1}{2}''$) D($-9\frac{3}{4}''$, $-1\frac{1}{2}''$, $0''$) is the axis of an oblique cylinder whose circular base of $2''$ diameter is in H with its center at the point D. Find (1) the intersection between cone and cylinder, (2) the development of the cone showing this intersection.

883. [1] The line A($-7\frac{1}{2}''$, $+4\frac{1}{2}''$, $+3\frac{1}{2}''$) B($-4''$, $0''$, $+2\frac{3}{8}''$) is the axis of an oblique cone, whose vertex is at A and whose circular base of $3\frac{3}{4}''$ diameter is in V with its center at B. An intersecting cylinder has for its axis the line C($-5''$, $+4''$, $+4''$) D($-9''$, $+1\frac{3}{4}''$, $0''$) its circular base of $3''$ diameter being in H with its center at the point D. Find (1) the intersection of cone and cylinder, (2) a line tangent to this intersection at a convenient point.

884. [1] A right circular cone stands in the third quadrant on a horizontal plane $5''$ below H, with the center of its circular base of $3\frac{1}{2}''$ diameter at the point B($-12''$, $-2\frac{1}{4}''$, $-5''$). Its altitude is $4\frac{1}{2}''$. An oblique intersecting cylinder has as axis the line C($-15\frac{1}{2}''$, $-\frac{3}{4}''$, $-\frac{3}{4}''$) D($-11\frac{1}{4}''$, $-3\frac{1}{4}''$, $-5''$), and has its circular base of $3''$ diameter in the same plane as the cone base with its center at the point D. Find (1) the curve of intersection of cone and cylinder, (2) the development of the cone, showing this intersection.

885. [1] A right circular cylinder and a right circular cone have vertical axes, and bases in a horizontal plane $4\frac{1}{2}''$ below H. The cone base is of $4''$ diameter with center at the point B($-13\frac{1}{2}''$, $-2\frac{1}{4}''$, $-4\frac{1}{2}''$); the cylinder base is of $2''$ diameter, with center at the point D($-14\frac{3}{4}''$, $-1\frac{1}{2}''$, $-4\frac{1}{2}''$); the cone altitude is $4''$. Find (1) the intersection of cone and cylinder, (2) the patterns (developments) for cone and cylinder, showing the intersection in each case.

886. [1] A right circular cylinder and a right circular cone have horizontal axes, and bases in a vertical plane $4''$ behind V. The cone base is of $4\frac{1}{4}''$ diameter, with center at the point B($-13''$, $-4''$, $-2\frac{1}{4}''$); the cylinder base is of $1\frac{1}{2}''$ diameter, with center at the point D($-14\frac{1}{2}''$, $-4''$, $-2''$); the cone altitude is $3\frac{1}{2}''$. Find (1) the intersection of cone and cylinder, (2) the patterns( developments) for cone and cylinder, showing the intersection in each case.

## 4.—GENERAL INTERSECTIONS OF TWO SURFACES.

**Including combinations of single-curved, warped, and double-curved surfaces.**

887. [1] A helical convolute is formed by drawing tangents to a helix, whose axis is the line M($-13''$, $+1\frac{1}{2}''$, $+4''$) N($-13''$, $+1\frac{1}{2}''$, $0''$), and which is generated by a point which starts from a point O($-14''$, $+1\frac{1}{2}''$, $0''$) in H and moves in such a way that its horizontal projection appears to revolve counter-clockwise. The pitch of the helix is $4''$. An oblique intersecting cone has its circular base of $1\frac{3}{4}''$ diameter in V with its center at a point B($-10''$, $0''$, $+\frac{7}{8}''$) and its vertex at A($-13''$, $+3\frac{3}{8}''$, $+1\frac{3}{4}''$). Find (1) the intersection of cone and helical convolute, (2) the development of the helical convolute, showing this intersection.

888. [1] A hemisphere of $4''$ diameter stands on H in the first quadrant with its center at the point O($-10\frac{1}{2}''$, $+2\frac{1}{8}''$, $0''$). It is cut by an oblique cylinder whose axis is the line A($-7\frac{1}{2}''$, $+5\frac{1}{2}''$, $+3\frac{1}{2}''$) B($-11''$, $+2''$, $0''$) and whose circular base of $2\frac{1}{2}''$ diameter is in H with its center at B. Find (1) the intersection of hemisphere and cylinder, (2) a line tangent to the curve of intersection at some convenient point.

889. [1] A hemisphere of $4\frac{1}{2}''$ diameter stands in the third quadrant on a horizontal plane $5''$ below H, with the center of its base at the point O($-11\frac{1}{8}''$, $-2\frac{3}{4}''$, $-5''$). It is cut by an oblique cylinder, whose axis is the line A($-9''$, $-2''$, $-1''$) B($-13''$, $-2''$, $-5''$) and whose circular base of $2\frac{1}{2}''$ diameter is in the above horizontal plane with its center at the point B. Find (1) the intersection between hemisphere and cylinder, (2) the development of cylinder, showing the intersection.

890. [1] A sphere of $4''$ diameter is in the third quadrant with its center at the point O($-9''$, $-2\frac{1}{2}''$, $-2\frac{1}{2}''$). An oblique intersecting cylinder has the line A($-6\frac{3}{4}''$, $-2\frac{1}{8}''$, $-\frac{1}{4}''$) B($-11\frac{1}{2}''$, $-2\frac{1}{8}''$, $-5''$) as axis, and its circular base of $2\frac{1}{2}''$ diameter is in a horizontal plane $5''$ below H with its center at the point B. Find (1) the intersection of the sphere and cylinder, (2) a line tangent to the curve of intersection at some convenient point.

891. [1] A sphere of $4''$ diameter is located in the third quadrant with center at a point O($-2\frac{1}{4}''$, $-2\frac{1}{4}''$, $-2\frac{1}{2}''$). A right circular cylinder of $2''$ diameter has its axis parallel to the ground line through the point A($-3''$, $-2\frac{3}{4}''$, $-3''$). Find (1) intersection of cylinder and sphere, (2) development of cylinder showing this intersection.

892. [1] (G. L. par. to short edge of sheet.) An ellipsoid of revolution is generated by the revolution about its major axis of an ellipse which is in a plane parallel to V, with its center at the point O($-5\frac{1}{2}''$, $+2''$, $+3''$) and with axes $6''$ and $4''$ respectively, the latter being parallel to H. An oblique cone has its vertex at the point A($-3\frac{1}{2}''$, $-2\frac{1}{2}''$, $+3\frac{1}{2}''$) and its circular base of $4''$ diameter is in H with center at B($-7\frac{1}{2}''$, $+2\frac{1}{2}''$, $0''$). Find the intersection of cone and ellipsoid of revolution.

893. [2] A sphere of $5''$ diameter has its center in the third quadrant at O($-2''$, $-2''$, $-2\frac{1}{2}''$). An oblique cone has the vertex A($-2''$, $-3\frac{1}{2}''$, $-4\frac{1}{2}''$) and its circular base of $2\frac{1}{2}''$ diameter is in V with center at the point B($-5\frac{1}{4}''$, $0''$, $-2''$). Find the intersection of sphere and cone.

894. [2] A torus with axis perpendicular to H through the point O($-3\frac{1}{8}''$, $+4\frac{1}{4}''$, $0''$) is generated by a circle of $2''$ diameter, which in initial position is in a plane parallel to V with its center at the point M($-5\frac{3}{8}''$, $+4\frac{1}{4}''$, $+1\frac{1}{4}''$). A right circular cone of $4''$ altitude, stands in H with the center of its base of

$3\frac{1}{2}''$ diameter at the point $C(-4\frac{1}{2}'', +2\frac{7}{8}'', 0'')$. Find the projection of the intersection between torus and cone.

895. [1] A torus stands on H in the first quadrant. Its axis is the line $M(-9\frac{1}{2}'', +2\frac{1}{2}'', 0'')$ $N(-9\frac{1}{2}'', +2\frac{1}{2}'', +3'')$, and its generating circle of $1\frac{3}{4}''$ diameter in initial position is in a plane parallel to V with center at the point $O(-11\frac{1}{2}'', +2\frac{1}{2}'', +\frac{7}{8}'')$. A right circular cone stands upon H, with the center of its circular base of $4''$ diameter at the point $B(-8\frac{1}{2}'', +3'', 0'')$. Its altitude is $3\frac{1}{2}''$. Find the intersection of torus and cone.

896. [1] (G. L. par. to short edge of sheet and $\frac{3}{4}''$ above middle of sheet.) A torus in the first quadrant has the line $M(-7'', +4'', 0'')$ $N(-7'', +4'', +4'')$ as its axis, and its generating circle of $2\frac{1}{2}''$ diameter in initial position is in a plane parallel to H with its center at the point $O(-9\frac{1}{4}'', +4'', +2'')$. An oblique intersecting cone has its circular base of $5''$ diameter in V with center at point $B(-3'', +6'', 0'')$, and its vertex at a point $A(-9'', +2'', +7'')$. Find the intersection of cone and torus.

897. [1] A torus has the vertical axis $A(-12'', -4'', -4'')$ $B(-12'', -4'', 0'')$ and its generating circle of $3\frac{1}{2}''$ diameter is in initial position in a plane parallel to V with its center at $O(-14\frac{1}{4}'', -4'', -1\frac{3}{4}'')$. Another intersecting torus has the horizontal axis $C(-7'', -5\frac{1}{4}'', -5\frac{1}{4}'')$ $D(-7'', 0'', -5\frac{1}{4}'')$ and its generating circle of $4''$ diameter is in initial position in a horizontal plane with its center at $M(-10'', -2\frac{1}{2}'', -5\frac{1}{4}'')$. Find the intersection of these two tori.

898. [1] A triangular pyramid stands in the first quadrant with its vertex at the point $M(-12'', +2'', +5'')$ and the three vertices of its triangular base at the points $A(-13\frac{5}{8}'', +\frac{3}{8}'', 0'')$ $B(-12\frac{1}{2}'', -4\frac{1}{4}'', 0'')$ and $C(-9\frac{3}{4}'', +1\frac{3}{8}'', 0'')$. It is intersected by a regular triangular prism whose lower base is in the plane $T(-14\frac{1}{8}'', -90°, +120°)$ with its center at a point $1''$ from the H trace of the plane T, and $2''$ from V. Each side of the base is $2''$ long, that side nearest V is parallel to V, and the altitude of the prism is $5\frac{1}{2}''$. Find (1) the intersection of pyramid and prism, (2) the development of each, to half scale, showing this intersection.

899. [1] A regular square pyramid of $4\frac{1}{2}''$ altitude has the axis $M(-12\frac{1}{2}'', -2\frac{1}{4}'', -5'')$ $N(-12\frac{1}{2}'', -2\frac{1}{4}'', -\frac{1}{2}'')$, and its base is in a horizontal plane $5''$ below H, with the line $A(-12\frac{7}{8}'', -\frac{5}{8}'', -5'')$ $B(-10\frac{3}{4}'', -1\frac{3}{4}'', -5'')$ as one side. A right circular cylinder of $1\frac{1}{4}''$ diameter has the axis $P(-14\frac{1}{2}'', -2\frac{1}{4}'', -3\frac{7}{8}'')$ $Q(-10\frac{1}{2}'', -2\frac{1}{4}'', -1\frac{1}{2}'')$. Find (1) the intersection of pyramid and cylinder, (2) the development of the pyramid, showing the intersection.

900. [1] The lines $A(-15'', 0'', -5'')$ $B(-12'', -5'', 0'')$ and $C(-8'', -5'', -5'')$ $D(-3\frac{1}{2}'', 0'', -\frac{1}{2}'')$ are the directrices of a hyperbolic paraboloid whose plane directer is V. It is intersected by an oblique cone whose vertex is the point $M(-8\frac{1}{2}'', -5\frac{3}{8}'', 0'')$ and whose circular base of $4''$ diameter is in V with its center at the point $N(-10'', 0'', -3\frac{1}{2}'')$. Find the intersection of cone and hyperbolic paraboloid.

901. [1] A hyperbolic paraboloid has the lines $A(-13\frac{3}{4}'', +2\frac{1}{2}'', 0'')$ $B(-10\frac{1}{2}'', +3'', -3'')$ and $C(-13\frac{1}{2}'', +1'', +2\frac{1}{2}'')$ $D(-10\frac{1}{2}'', +\frac{1}{2}'', 0'')$ as directrices and H as plane directer. A right circular cylinder of $2''$ diameter lies on H with the line $M(-14\frac{1}{2}'', +\frac{1}{2}'', +1'')$ $N(-10'', +3\frac{1}{4}'', +1'')$ as axis. Find (1) the intersection of the cylinder and hyperbolic paraboloid, (2) the development of cylinder showing this intersection.

902. [1] The right line directrices of a certain hyperbolic paraboloid are given as $A(-14\frac{1}{2}'', -5\frac{3}{8}'', 0'')$ $B(-11\frac{1}{2}'', +\frac{3}{8}'', +5'')$ and $C(-7\frac{1}{2}'', +5\frac{3}{8}'', +5'')$ $D(-2'', +1'', 0'')$ and H as plane directer. A hyperboloid of revolution of one

nappe has as axis the line E$(-9\frac{1}{2}'', +2\frac{3}{8}'', 0'')$ F$(-9\frac{1}{2}'', +2\frac{3}{8}'', +5'')$ and its generatrix in initial position is the line M$(-12\frac{1}{2}'', +\frac{3}{8}'', 0'')$ N$(-9\frac{1}{2}'', +\frac{3}{8}'', +3'')$. Find (1) the meridian curve of the latter which is parallel to V, (2) the curve of intersection of the two surfaces.

903. [1] A right circular cone of 5″ altitude stands on a horizontal plane $5\frac{1}{4}''$ below H, with the center of its circular base of $3\frac{1}{2}''$ diameter at the point O$(-13'', -2\frac{1}{2}'', -5\frac{1}{4}'')$. An oblique helicoid has the same axis as the cone, its generatrix in initial position pierces the plane of the cone base at the point M$(-14\frac{3}{4}'', -2\frac{1}{2}'', -5\frac{1}{4}'')$ and it makes an angle of 30° with the axis. Pitch of helix generated by point M = 4″. Find (1) the intersection of cone and helicoid, (2) the development of the cone, showing this intersection.

904. [1] A right circular cone stands on a horizontal plane $5\frac{1}{4}''$ below H, with the center of its circular base of 4″ diameter at the point O$(-12'', -2\frac{3}{4}'', -5\frac{1}{4}'')$. The altitude of the cone is 6″. An oblique helicoid has the same axis as the cone, its generatrix in initial position is the line M$(-12'', -2\frac{3}{4}'', -4\frac{1}{4}'')$ N$(-14\frac{1}{2}'', -2\frac{3}{4}'', -5\frac{1}{4}'')$ and its pitch is 2″. Find (1) the intersection of cone and helicoid, carrying the generatrix of the latter surface through 2 complete revolutions about the axis, (2) the development of the cone showing the intersection.

905. [1] An oblique helicoid has a vertical axis which pierces H at the point O$(-13\frac{1}{2}'', +2'', 0'')$. Its pitch is 4″ and its generatrix in initial position is the line A$(-15'', +2'', 0'')$ B$(-13\frac{1}{2}'', +2'', +1\frac{1}{2}'')$. The generation is such that in H projection the line generatrix appears to rotate counter-clockwise. An oblique cone has a circular base of 3″ diameter in H with center at the point N$(-8\frac{3}{4}'', +3\frac{1}{4}'', 0'')$ and vertex at M$(-13\frac{1}{2}'', +2'', +2\frac{1}{4}'')$. Find (1) the line in which the helicoid cuts H, (2) the intersection of helicoid and cone, (3) the development of cone showing the intersection.

## III. GENERAL INTERSECTIONS.

Including three surfaces.

906. [1] (Ground line parallel to shorter edge of sheet.) A right circular cylinder of 3″ diameter has as axis the line A($-7\frac{1}{2}''$, $+5''$, $0''$) B($-3\frac{1}{2}''$, $0''$, $0''$); a sphere of 4″ diameter has its center in H at the point O($-7\frac{1}{2}''$, $+4''$, $0''$); a hyperbolic paraboloid whose plane directer is H, has directrices M($-7''$, $+3''$, $+3''$) N($-5\frac{1}{2}''$, $+\frac{1}{2}''$, $0''$) and P($-3\frac{1}{2}''$, $+2''$, $0''$) Q($-2\frac{5}{8}''$, $0''$, $+1\frac{1}{2}''$). Find (1) the intersection of the cylinder with the sphere and hyperbolic paraboloid, considering only that part of each surface which is above the H plane, (2) the development of the semi-cylinder between the intersecting surfaces.

907. [1] (Ground line parallel to shorter edge of sheet.) A hexagonal ring stands on H in the first quadrant and has for its axis the line M($-6\frac{5}{8}''$, $+3\frac{1}{2}''$, $+3''$) N($-6\frac{5}{8}''$, $+3\frac{1}{2}''$, $0''$). Its generating hexagon in initial position stands in a plane parallel to V, with its base in H and its center at the point P($-8\frac{5}{8}''$, $+3\frac{1}{2}''$, $+1\frac{1}{8}''$). A regular hexagonal pyramid of $4\frac{1}{4}''$ altitude stands on H with two sides of its base parallel to the ground line, and the center of said base at the point O($-8\frac{1}{2}''$, $+3\frac{7}{8}''$, $0''$). Sides of base are $1\frac{3}{4}''$. An oblique cylinder has as axis the line A($-2''$, $+1\frac{7}{8}''$, $+3\frac{1}{8}''$) B($-5\frac{1}{8}''$, $+5''$, $0''$) with the center of its circular base of $2\frac{1}{2}''$ diameter in H at the point B. Find the lines of intersection of the hexagonal ring with the pyramid and cylinder.

908. [1] (Ground line parallel to shorter edges of sheet.) A sphere, an oblique cylinder and an oblique cone are located in the third quadrant. The sphere is of 5″ diameter with center at the point O($-5\frac{1}{2}''$, $-3''$, $-3''$); the cylinder has the axis A($-5\frac{1}{2}''$, $-3''$, $-5\frac{3}{4}''$) B($-8\frac{3}{4}''$, $-3''$, $0''$) with its circular upper base of $2\frac{1}{4}''$ diameter in H at the point B, the cone has its vertex at the center of the sphere, and its elliptical base, axes of 3″ and $3\frac{1}{2}''$ respectively, is in V with center at the point M($-3\frac{3}{8}''$, $0''$, $-3''$) and with its major axis parallel to H. Find the intersections of the sphere with cylinder and cone.

909. [1] (Ground line parallel to shorter edges of sheet.) A torus, a cylinder and a cone are located in the first quadrant. The axis of the torus is a line perpendicular to H through the point M($-5\frac{1}{2}''$, $+4\frac{1}{4}''$, $0''$), and its generating circle, of $2\frac{1}{2}''$ diameter, in initial position is in a plane parallel to V with its center at the point X($-7\frac{3}{4}''$, $+4\frac{1}{4}''$, $+3\frac{1}{2}''$). The oblique cylinder has as axis the line A($-6\frac{1}{2}''$, $+4\frac{1}{2}''$, $+4\frac{1}{4}''$) B($-9''$, $+2''$, $0''$), the center of its circular base, of 3″ diameter, being in H at the point B. The vertex of the cone is at the point C($-5\frac{1}{2}''$, $+4\frac{1}{4}''$, $+7''$) and the center of its circular base of 4″ diameter is in H at the point D($-2\frac{1}{4}''$, $+6\frac{1}{4}''$, $0''$). Find the intersections of the torus with cylinder and with cone.

910. [1] A right circular cylinder of $2\frac{1}{2}''$ diameter has the axis M($-13\frac{3}{4}''$, $0''$, $+2''$) N($-6\frac{3}{8}''$, $+2''$, $+2''$); a sphere of 5″ radius has its center in H at the point O($-\frac{1}{2}''$, $+\frac{1}{4}''$, $0''$); a hyperbolic paraboloid has H as plane director and as directrices the lines A($-16''$, $0''$, $+4''$) B($-13''$, $+5''$, $+1''$) and C($-6''$, $0''$, $+4''$) D($-6''$, $0''$, $0''$). Find (1) the intersections of the cylinder with the sphere and hyperbolic paraboloid, (2) the development of that part of the cylinder between the other two surfaces, said development to be made on a separate sheet.

## GENERAL APPLICATIONS

BASED ON

### INTERSECTIONS AND DEVELOPMENTS.

915. [2] A spiral riveted pipe is shown in Fig. 45. Design such a pipe, making pitch of helices twice the pipe diameter, and find the pattern lay-out for a length of pipe equal to four times the diameter.

916. [1] Fig. 49 shows the ventilator connections to be located in the ridge of a factory building. Assume a convenient scale and find the projections of the pipes A, B and D, of their intersections, and the patterns (developments) for the same. Also the pattern for a cap C, to overhang 3″ all around.

917. [1] A sheet metal spire is shown in Fig. 55, located on a symmetrical gabled tower. Assuming reasonable dimensions, find and dimension the pattern for the spire.

918. [1] A stone monument is shown in Fig. 59. Assuming a convenient scale, find the development of all surfaces except the sphere and to scale construct from a separate sheet a model for the monument.

919. [2] A sheet metal moulding is shown intersecting a spherical newel post in Fig. 60. Find (1) the curves of intersection, (2) the pattern lay-out for the moulding.

920. [2] A symmetrical triangular galvanized iron panel is shown in Fig. 61. Find the projections of the panel, and the pattern lay-out for one side.

921. [1] In Fig. 62 is shown two views of a copper cornice ornament. Construct the projections of the ornament, and find and dimension the complete pattern lay-out.

922. [2] A galvanized iron pillar base is shown in Fig. 63. Find the projections of the base, and a pattern lay-out for the intermediate section.

923. [1] In Fig. 64 a metal gable moulding is shown at its intersection with a vertical pilaster. Assuming convenient scale and dimensions, find the projections of the intersection curves, and pattern for a short length of both moulding and pilaster.

924. [1] Design a coffee-pot with conical body, spout and cover, and handle similar to that shown in Fig. 65, showing its projections including intersection curve of spout and body, and lay out patterns for cutting the metal for all parts of the pot.

925. [1] Scale, $\frac{3}{4}'' = 1' - 0''$. An iron pouring-pot has a cylindrical body, conical top and cylindrical spout as indicated in Fig. 66. Find the projections of the pot, the curves of intersection and the developments of the parts.

926. [2] A pipe fitting is shown in Fig. 67. Find its projections, the curves of intersection, and develop outer and inner surface of one branch of the fitting.

927. [2] Scale, half size. A copper sink drainer, Fig. 68, is made of a conical perforated front and two triangular vertical back pieces at right angles. Construct the three projections of this drainer and lay out the pattern to cut from one piece allowing a $\frac{1}{4}''$ lap, cut off at the correct angle at each end.

928. [1] Scale, $1\frac{1}{2}'' = 1' - 0''$. Find the projections and pattern development of the metal reducer in Fig. 69 designed to connect a square with a round pipe. Dimension in full, so as to be clear to the one who lays out the pattern.

929. [2] Scale, $1\frac{1}{2}'' = 1'-0''$. A conical offset pipe is shown in Fig. 70, connecting the two cylindrical pipes. Find its projections and lay out a pattern for the same.

930. [2] Find the projections of the hopper of Fig. 71, and determine all the angles which would be necessary in construction. Make a working drawing of one side of the hopper.

931. [1] A cylindrical pipe passes through a factory roof in Fig. 72. Find the projections and pattern for the flange as shown, assuming the flange base to be a square, the roof to be inclined at 45°, and the center line of the pipe to pass through the center of the square flange base.

932. [2] Scale, $1'' = 1'-0''$. Show three views of the bath tub of Fig. 73, and find the pattern lay-out for the same, dimensioned in full for the tinsmith.

933. [2] A tin tea pot has a conical spout as shown in Fig. 74. Find projections and pattern for this spout.

934. [1] A tin tea pot is designed with conical body and conical spout as in Fig. 74. Find and dimension its projections and complete patterns. Scale, full size.

935.[2] Construct 2 views and the complete pattern for the steam exhaust head shown in Fig. 75.

936. [2] Draw two views and lay out the pattern for a roof flange similar to that shown in Fig. 76, assumed to be a portion of a cone of revolution.

937. [1] Scale, $1\frac{1}{2}'' = 1'-0''$. Make the necessary drawings for a transition connection between square and round pipes similar to that shown in Fig. 77. Lay out and dimension the complete pattern.

938. [1] Design a metal oil can as shown in Fig. 78. Show necessary views, and lay out and dimension the complete pattern.

939. [2] A hexagonal nut has a conical chamfer as shown in the top figure of Fig. 79. Construct 3 views, assuming $a = 2\frac{1}{2}''$, $d = 1\frac{1}{4}''$, and the chamfer angle $= 45°$.

940. [2] A hexagonal nut has a spherical top as shown in the lower figure of Fig. 79. Construct 3 views, assuming $a = 2\frac{1}{2}''$, $d = 1\frac{1}{4}''$, $r = 2''$, $c = \frac{3}{16}''$.

941. [2] An upset iron rod as shown in Fig. 80, is turned down to a conical transition, connecting the square and cylindrical portions. Construct 2 views of such a rod, finding accurately the curves of intersection.

942. [1] Design a metal sugar scoop such as is sketched in Fig. 81, showing at least two views and a complete pattern for the same.

943. [1] Construct two views and complete pattern lay-out for the tin measure shown in Fig. 82.

944. [4] Scale, $\frac{3}{4}'' = 1'-0''$. The Fig. 83 shows a hopper used on a rotating cylindrical dryer. The hopper top is an 18″ square, the sides of hopper being faces of a regular pyramid whose vertex is in the center line of the cylinder as shown. $b = 2'-0''$. $a = 2'-6''$. Show three views, find intersection of hopper with cylinder, and develop pattern for one-half the hopper.

945. [2] Two cylindrical air shafts intersect as shown in Fig. 84. $a = 3'-0''$. $c = 12''$. Center line of small shaft is 9″ from that of large. Show 3 views and develop smaller shaft. Scale, $\frac{3}{4}'' = 1'-0''$.

946. [4] Construct to convenient scale, two views of the stove pipe elbow in Fig. 85. Develop pattern for one half.

947. [2] To a convenient scale, construct two views of the furnace elbow shown in Fig. 86, and lay out the patterns for the intermediate section and one end section.

948. [4] Fig. 87 shows a square furnace pipe elbow. Construct two views, and lay out a pattern for the complete elbow.

949. [2] Fig. 92 shows a water tank with conical boss. Assuming reasonable dimensions and scale, show 2 views of the tank and develop the boss and the tank.

950. [1] A locomotive smoke stack is dimensioned in Fig. 88. To scale, $\frac{3}{4}'' = 1'-0''$, draw two views of the same, and lay out sheets for the several sections, dimensioning ready for cutting.

951. [2] A pipe connection is made up of portions of a torus and a cylinder, flanged as shown in Fig. 89. Find two views, with the curve of intersection, and develop the cylindrical portion. Scale, $1'' = 1'-0''$.

952. [2] Design a tin funnel similar to that shown in Fig. 90. Show 2 views and lay out complete pattern, dimensioning in full.

953. [4] A scale scoop is formed of portions of 2 equal intersecting cylinders as in Fig. 91. Lay out and dimension a complete pattern.

954. [2] A portion of a connecting rod is shown in Fig. 93. Assume dimensions about twice the size of the blue print drawing, and find three projections of the curve of intersection between the square shaft and the sphere as shown.

955. [1] A transition connection for rectangular to round pipe is shown in Fig. 94, with round pipe development and transition pattern. Lay out and dimension the complete problem to scale, $3'' = 1'-0''$. Develop the conical surface BGE by Church's method, and the conical surface AGK approximately by triangles.

956. [2] Find two views and pattern lay-out for the furnace partition transition pipe shown in Fig. 95. Scale, $1\frac{1}{2}'' = 1'-0''$.

957. [1] A furnace connection is to be constructed as shown in Fig. 96. Find pattern for all parts shown, assuming reasonable proportions and scale.

958. [2] Design a metal gable moulding and wash as shown in Fig. 97 and find the pattern lay-out for the metal cutter.

959. [2] A locomotive slope sheet is shown in Fig. 98. Assume reasonable dimensions and find the slope sheet pattern.

960. [1] Design two gusset plates for a boiler stack such as indicated in Fig. 99. Show three views of the plates and their intersections with stack and boiler, then find the development of one of these gusset plates.

## FIGURE INDEX.

The following is a list of blue print figures, with numbers of those problems which are based thereon.


Fig. 1.


Fig. 2.

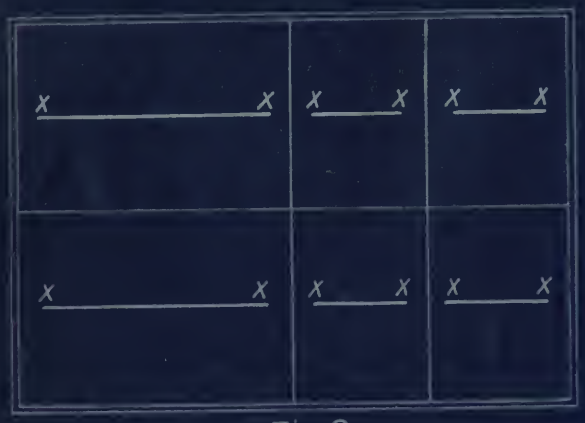


Fig. 3.

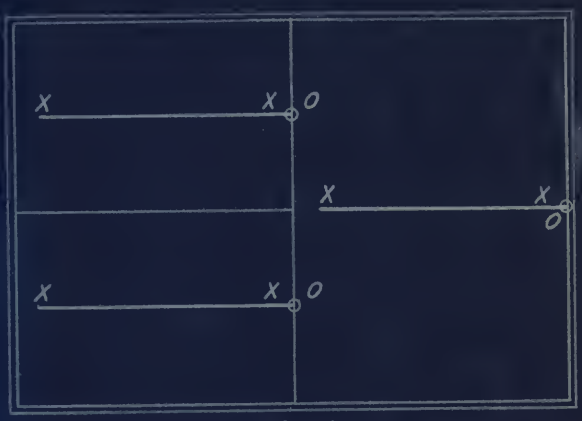


Fig. 4.

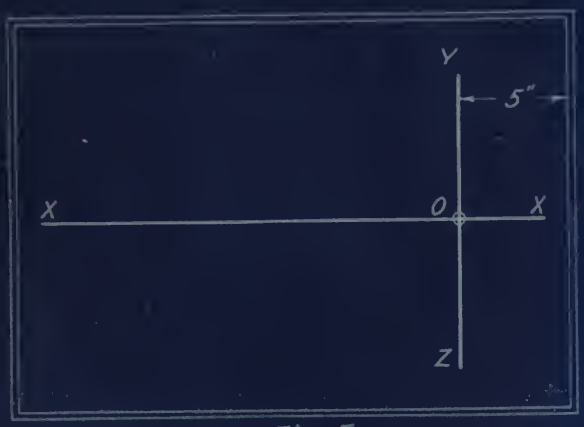


Fig. 5.

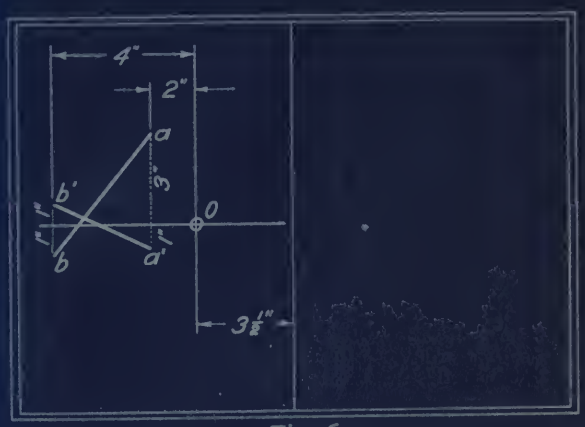


Fig. 6.

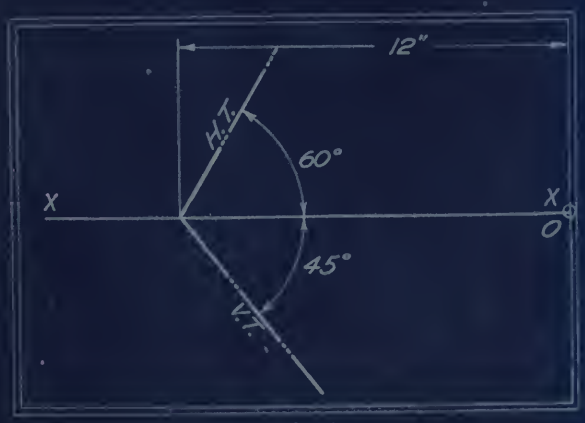


Fig. 7.

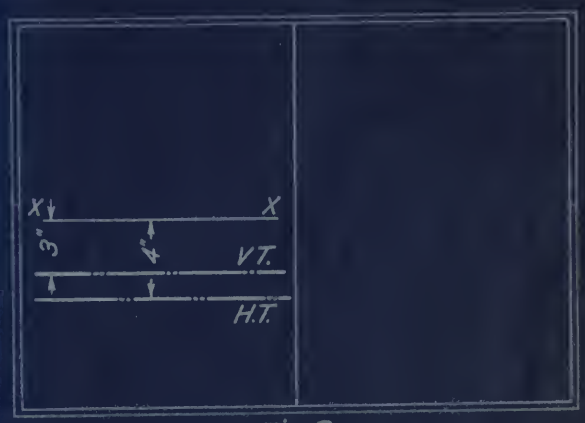


Fig. 8.

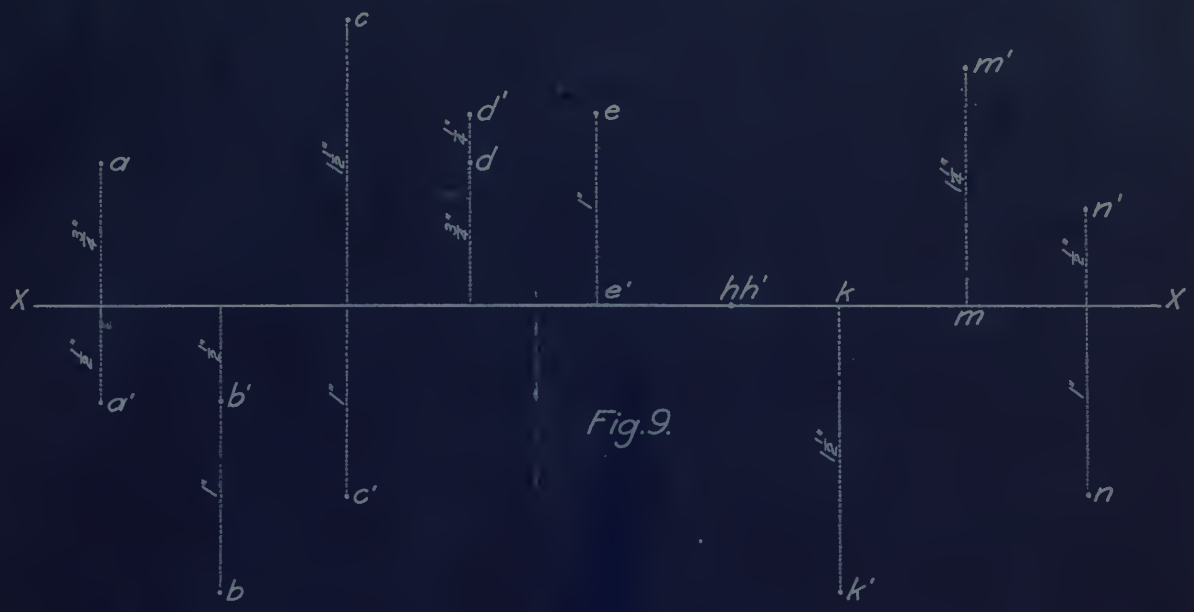


Fig. 9.

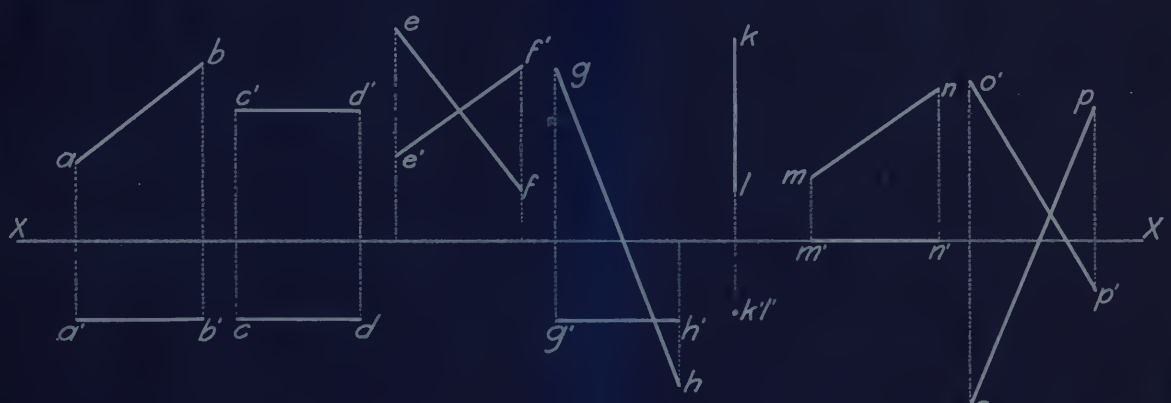


Fig. 10.


Fig. 11.

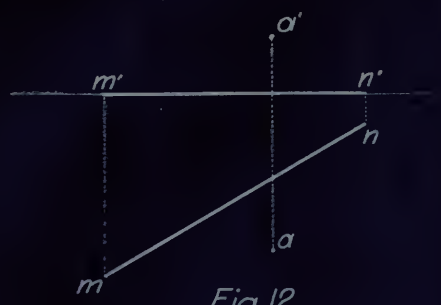


Fig.12.

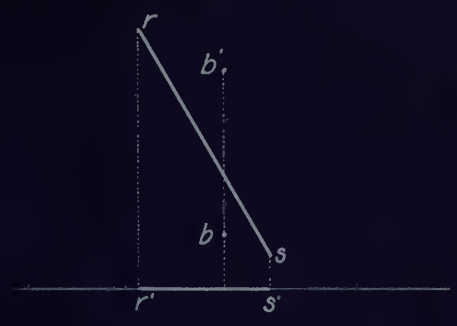


Fig.13.

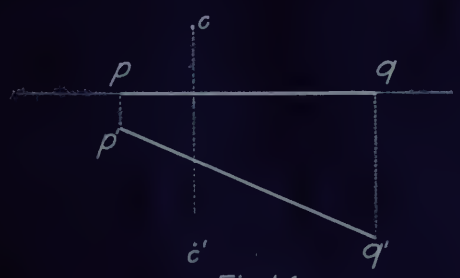


Fig.14.

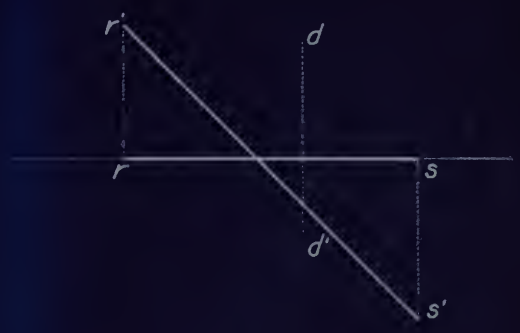


Fig.15.

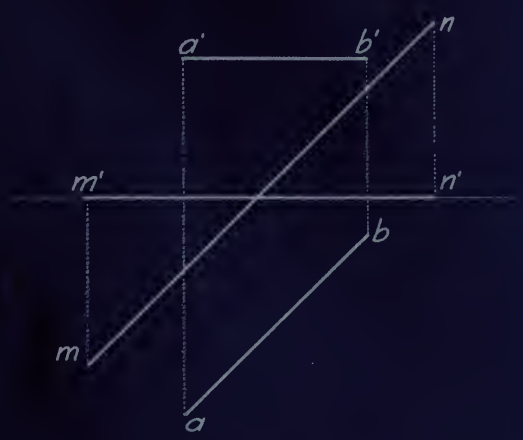


Fig.16.

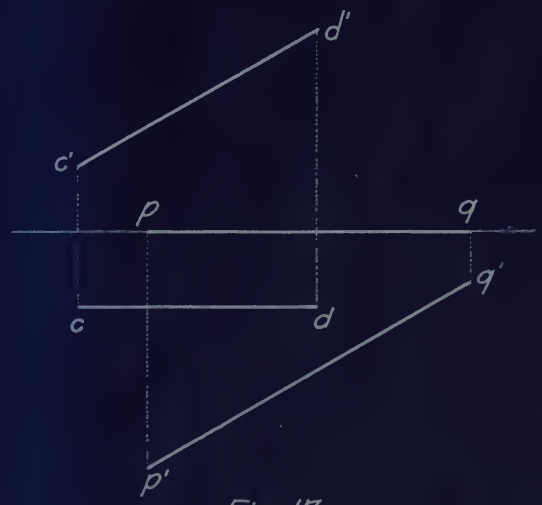


Fig.17.

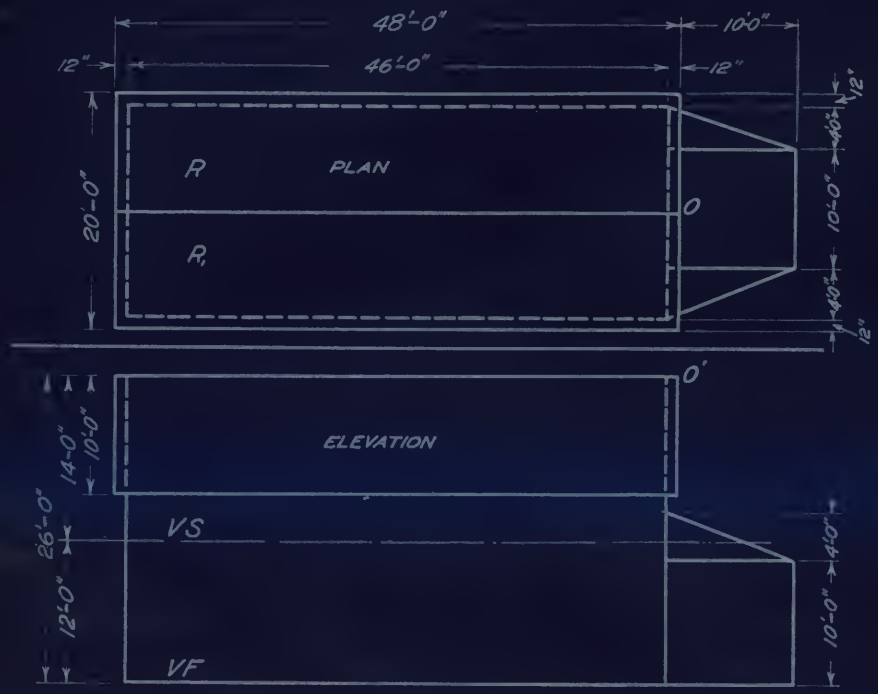


Fig. 18.

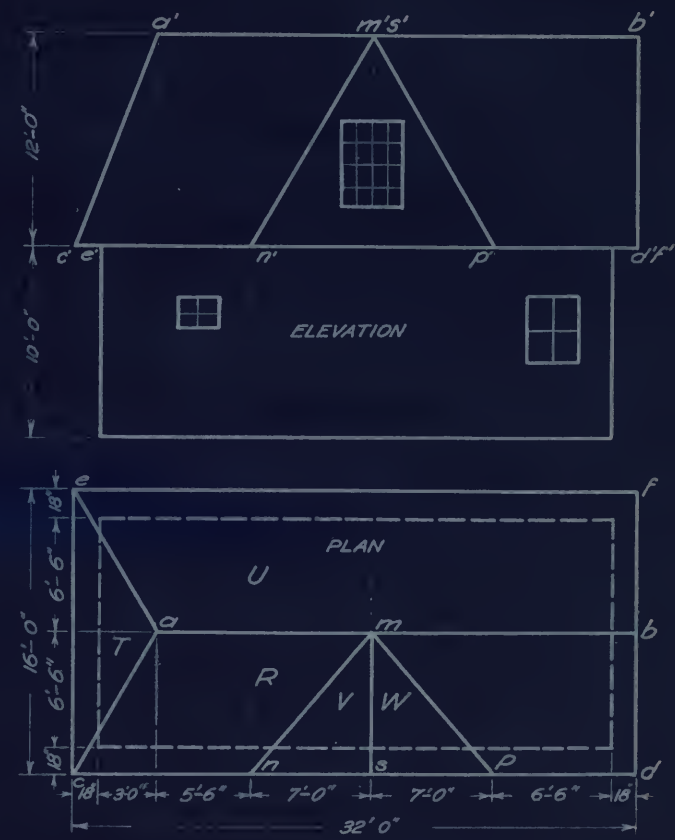


Fig. 19.

FRAME MILL BUILDING.

Plan (H projection) and elevation (V projection).
Note: Take P at -3". Locate O at (-1", -1 1/8", -1/4").
[(4) Scale 1/16" = 1'-0"]

COTTAGE ROOF WITH GABLES.

Represented in skeleton.
[(4) Scale, 1" = 10']


Fig. 20.

CAP FOR FACTORY VENTILATOR SHAFT.

Galvanized iron; angle-iron frame.
[(2) Scale, ½"=1'-0".]

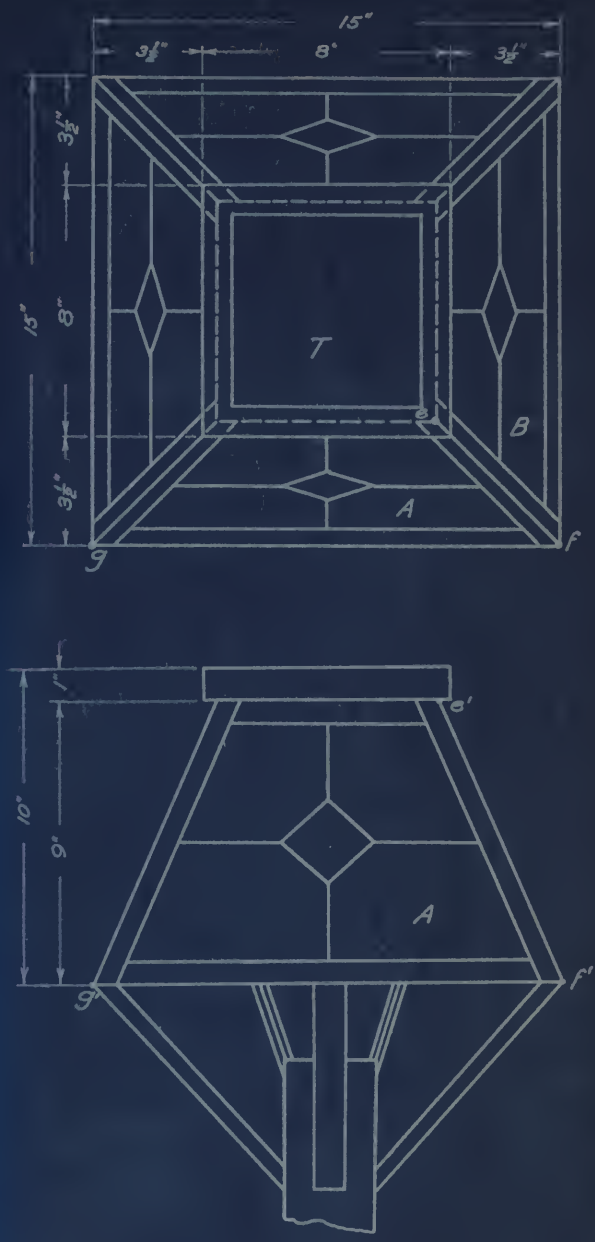


Fig. 21.

OAK MISSION LAMP SHADE.

[(2) Scale 1"=5".]

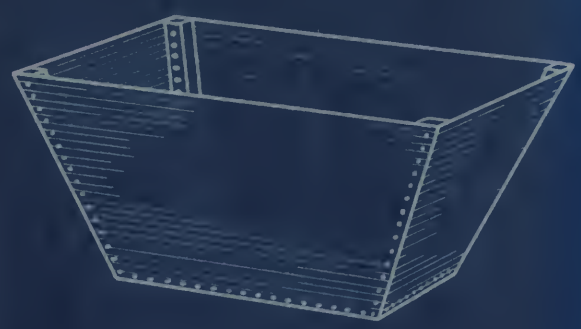

Fig. 22.

STEEL TANK FOR AN ELEVATOR BOOT.

Plates to be bent and riveted as show in cut.

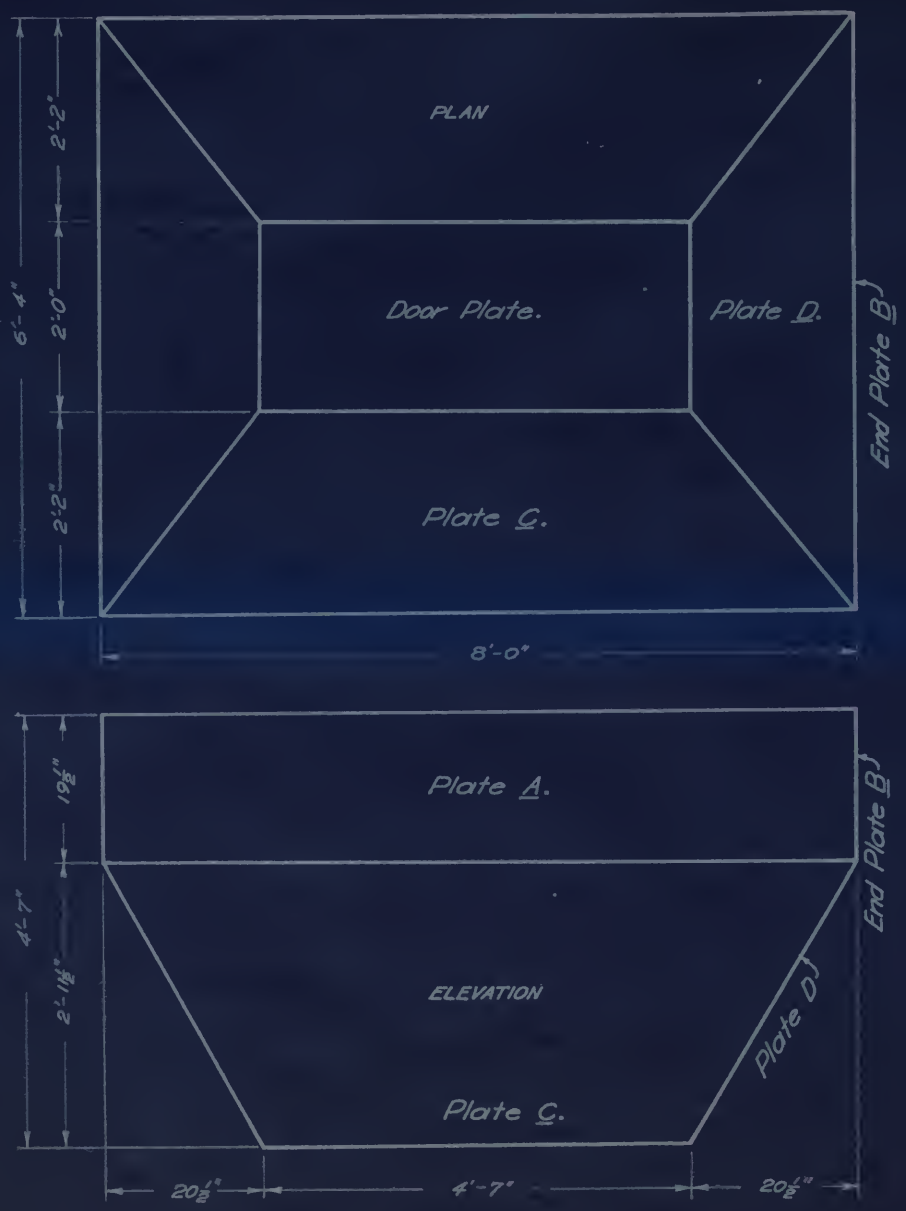


Fig. 23.
[(2) Scale, ½" = 1'-0"]


Fig. 24.

SHEET METAL REDUCER.

Designed to connect two vertical mill shafts of different sizes.
[(2) Scale, ½" = 1'-0"]

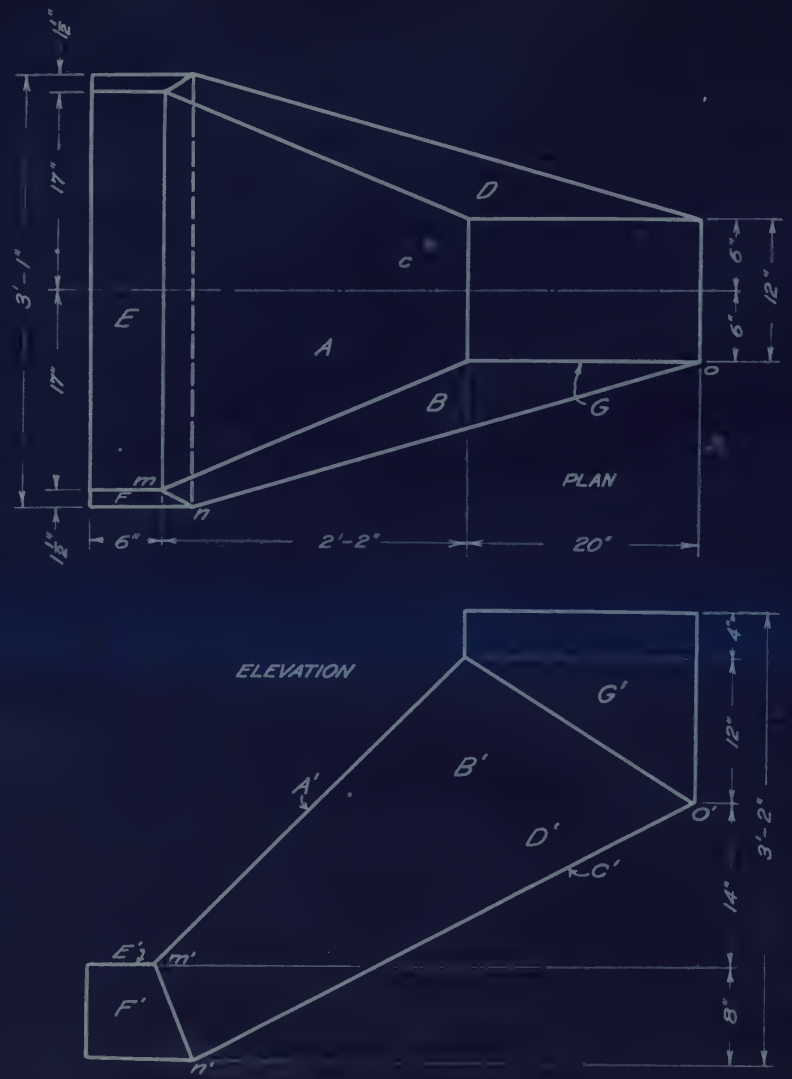


Fig. 25.

SHEET METAL ASH CHUTE.

[(2). Scale, 1½"=1'-0"]

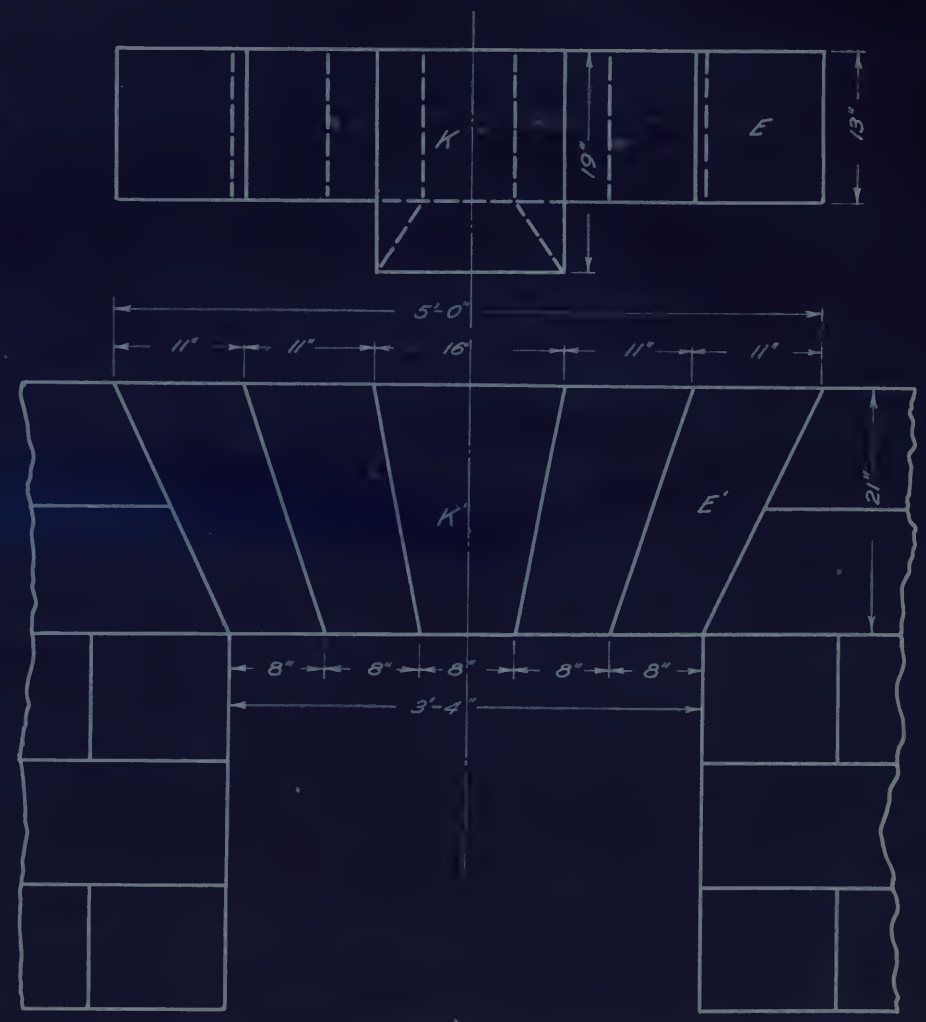


Fig. 26.

STONE ARCH OVER WINDOW.

[(2), Scale, 1"=1'-0"]

COORDINATES.

Mast: D(−17′, +12′, +24′). E(−17′, +12′, +8′).

Boom end, F(−29′, +16′, +19′)

Guy-rope posts:

A (−35′, +2½′, +5′)

B (−5′, +2′, +6′)

C (−12′, +23′, +1′)

[(2) Scale, $\frac{3}{16}$" = 1′-0″]

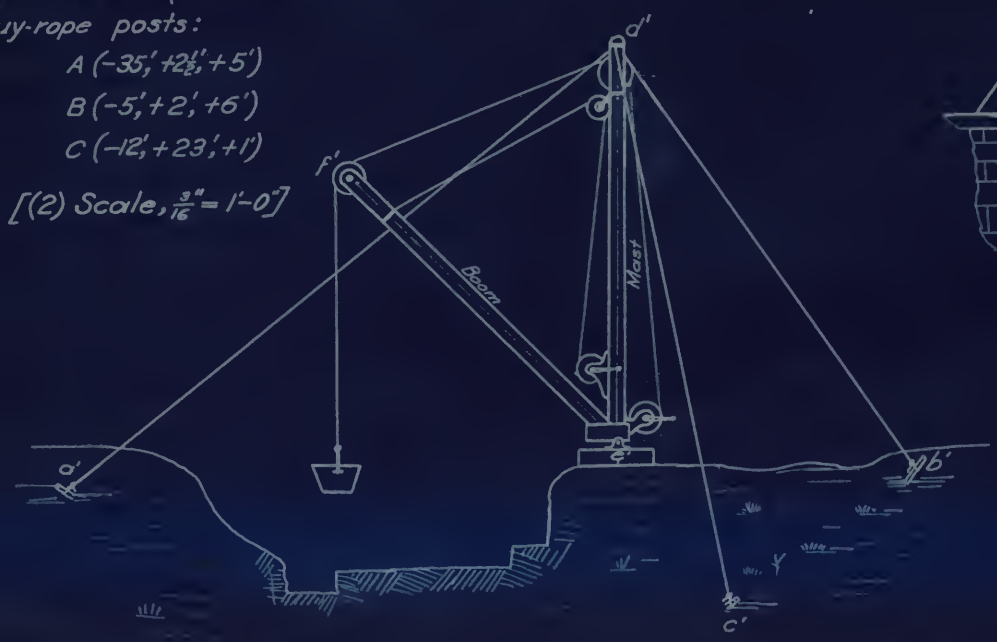



Fig. 27.

STONE QUARRY BOOM DERRICK.

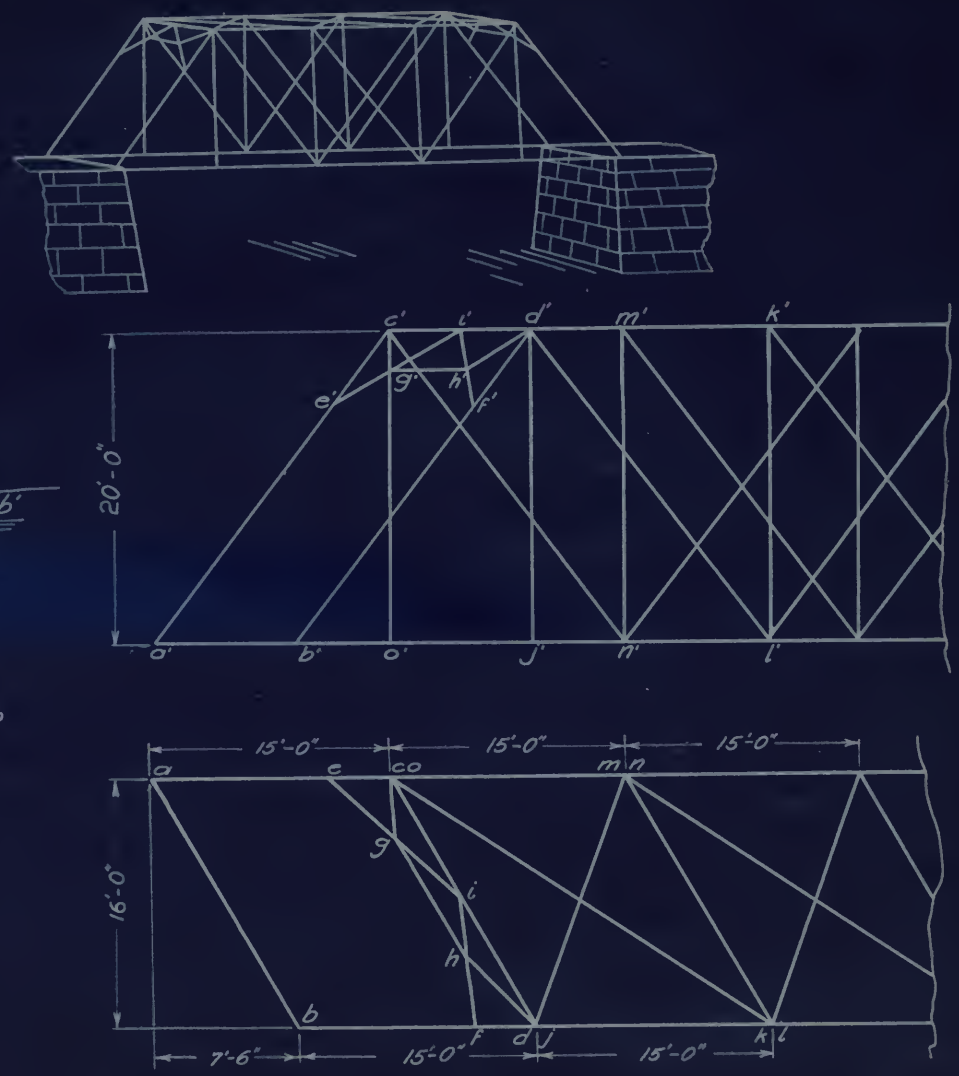


Fig. 28.

SKEW BRIDGE WITH PORTAL BRACING.

Plan and elevation.

[(2) Scale 1″ = 10′]

$EC = \frac{1}{4} AC$

$EG = \frac{1}{2} EI$

$CI = \frac{1}{2} CD$

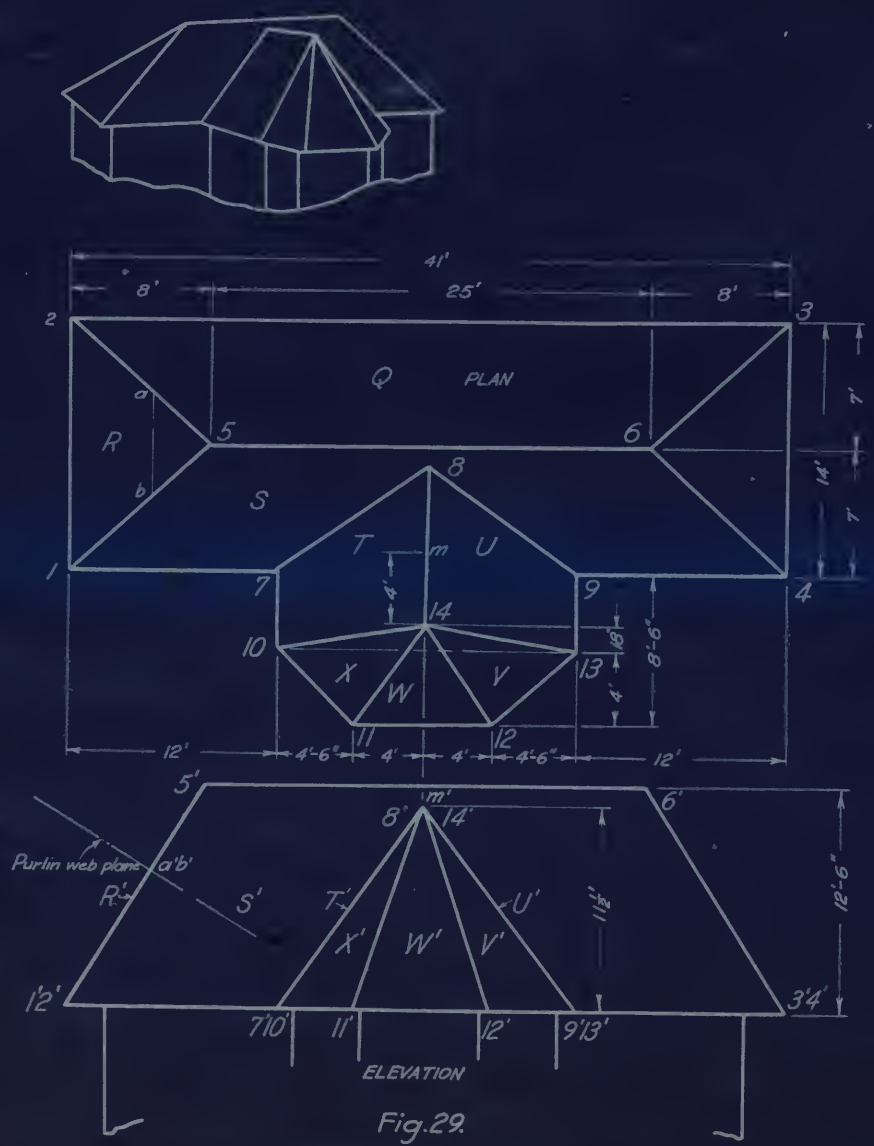


Fig. 29.
GYMNASIUM ROOF.
[(2) Scale, $\frac{3}{32}$"=1'-0"]


Fig. 30.
FACTORY BUILDING.
[(2) Scale, 1"=16']

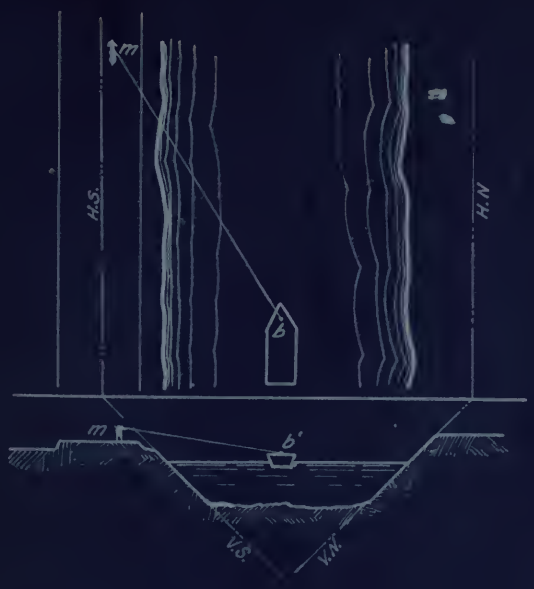


Fig. 31.

MULE TOWING CANAL BOAT.

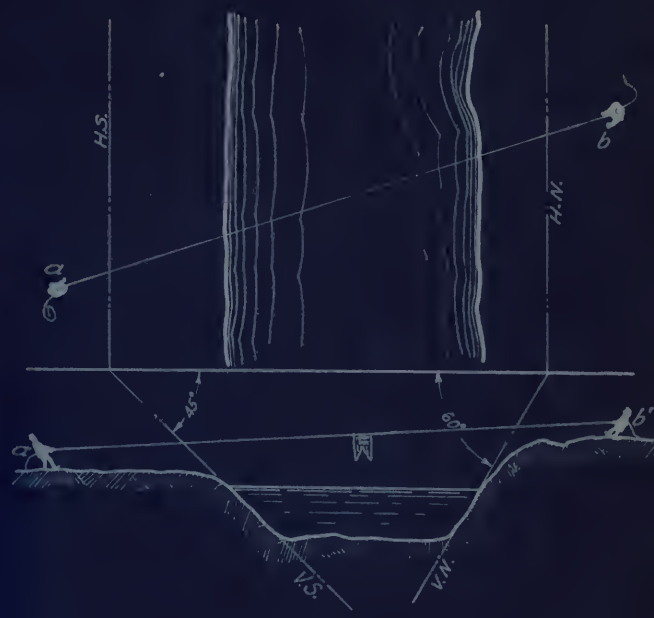


Fig. 31

TUG-OF-WAR ACROSS RIVER.

UNIVERSITY FRESH-SOPH SPRING GAMES.

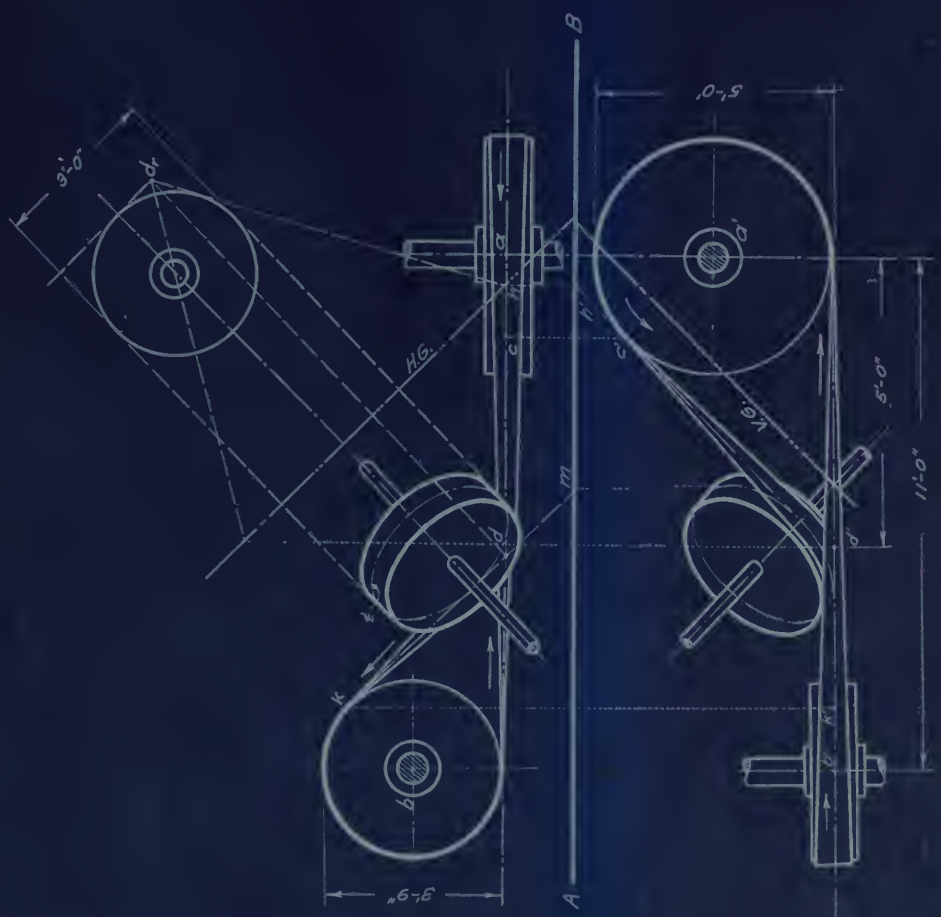


Fig. 33.

GUIDE PULLEY.


Fig. 34.

A COUNTRY HOTEL WITH DORMERS.

[(2) Scale $\frac{1}{4}$" = 1'-0"]

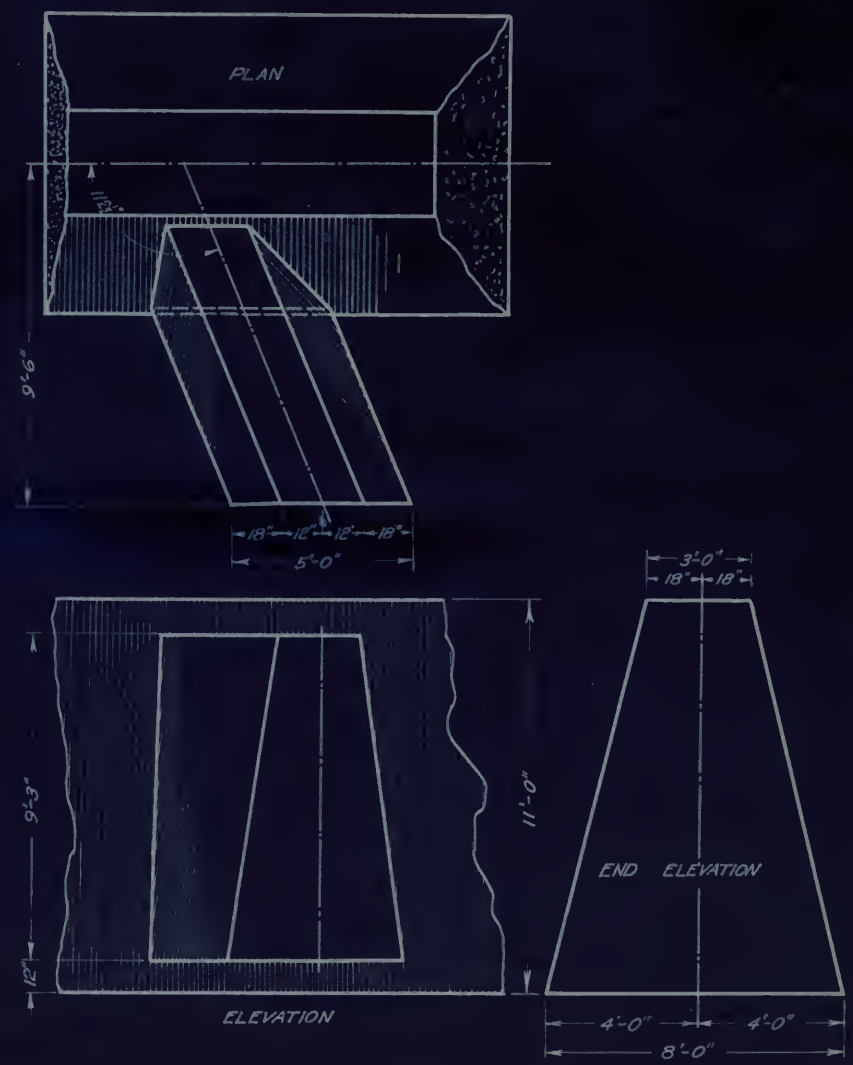


Fig. 35.

CONCRETE DOCK WALL WITH RETAINING WALL.

[(2) Scale $\frac{1}{4}$" = 1'-0"]

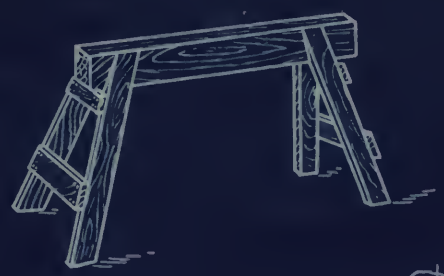

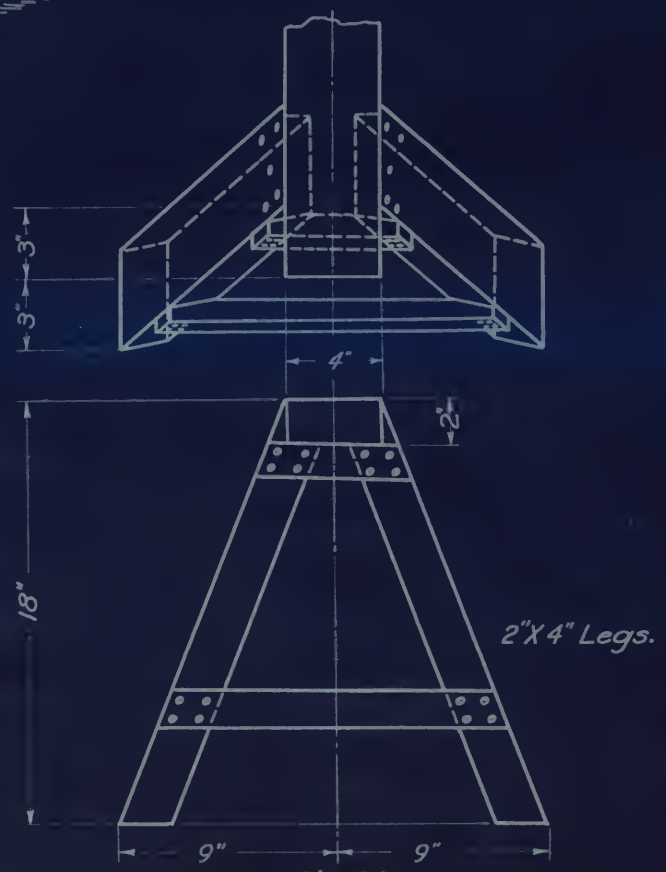


Fig. 36.

CARPENTER'S SAW-HORSE.

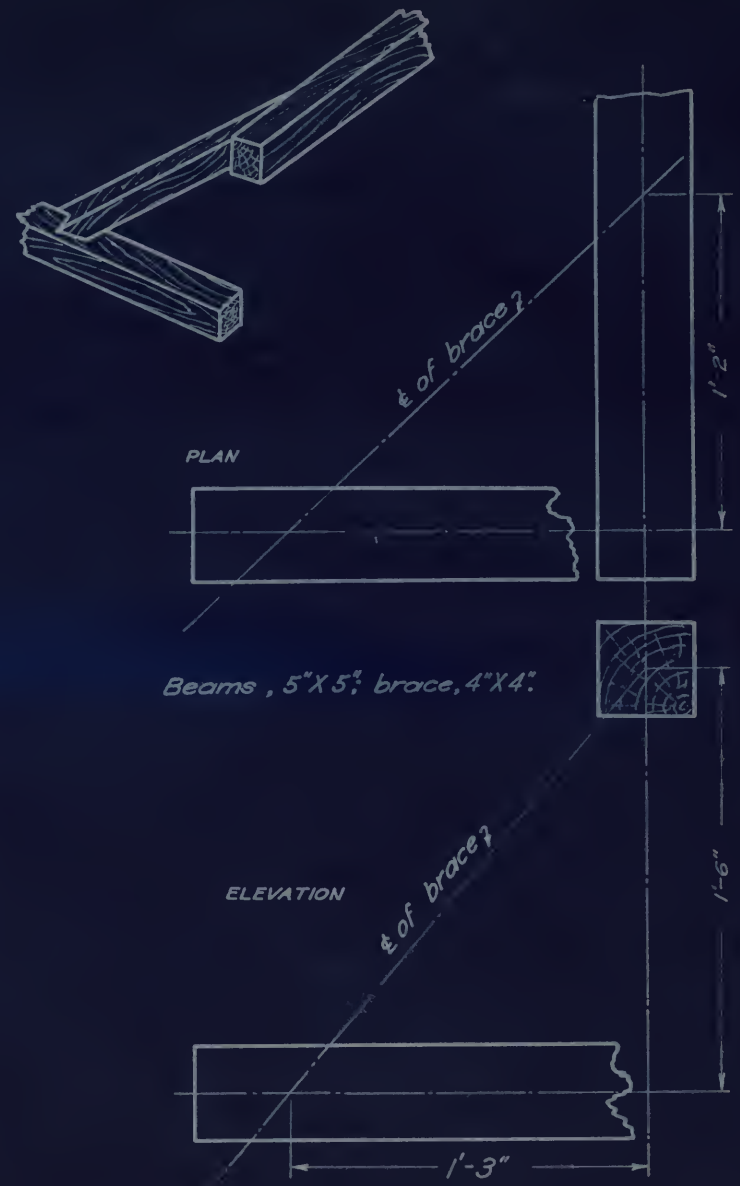


Fig. 37.

SKEW BRACE.


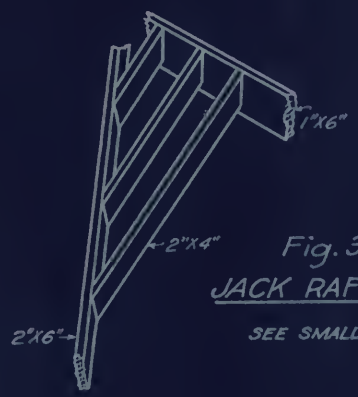


Fig. 38.
JACK RAFTERS B.
SEE SMALL SKETCH.

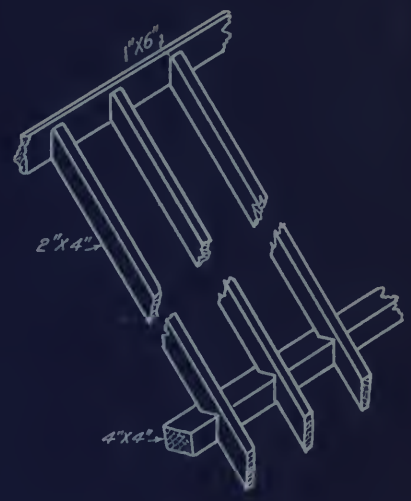


Fig. 39.
HOUSE RAFTER A.
SEE SMALL SKETCH.

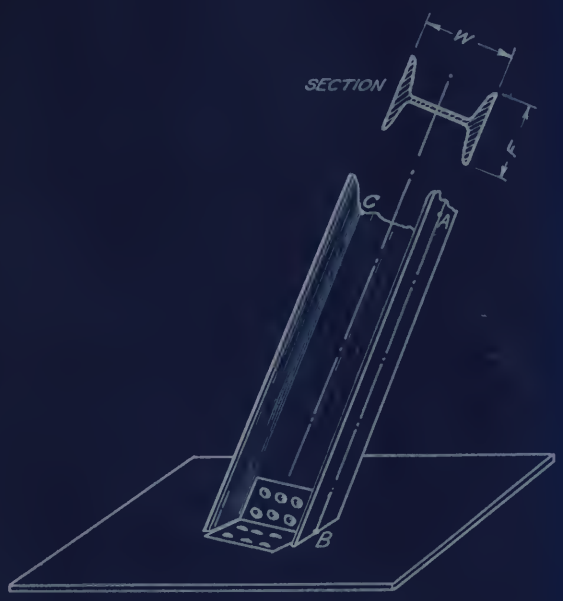


Fig. 40.

I-BEAM CONNECTION.

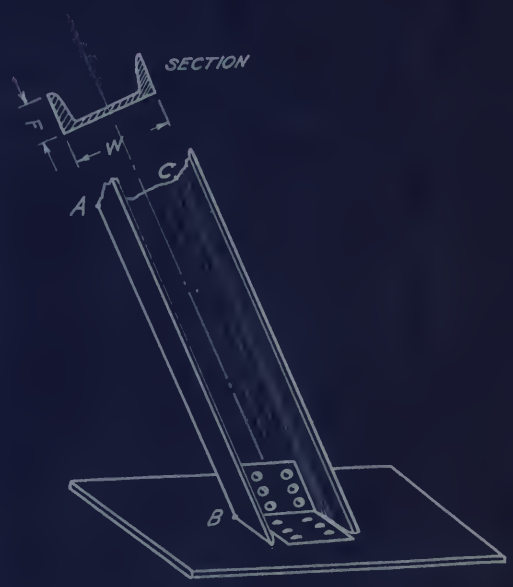


Fig. 41.

BENT PLATE CHANNEL CONNECTION.

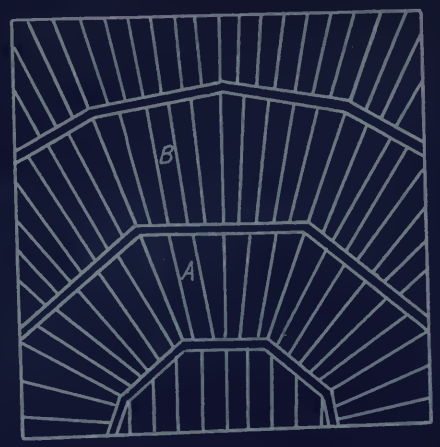


FRAMING PLAN.
BOWLED AUDITORIUM FLOOR.
(Details in Fig 42 & 43).

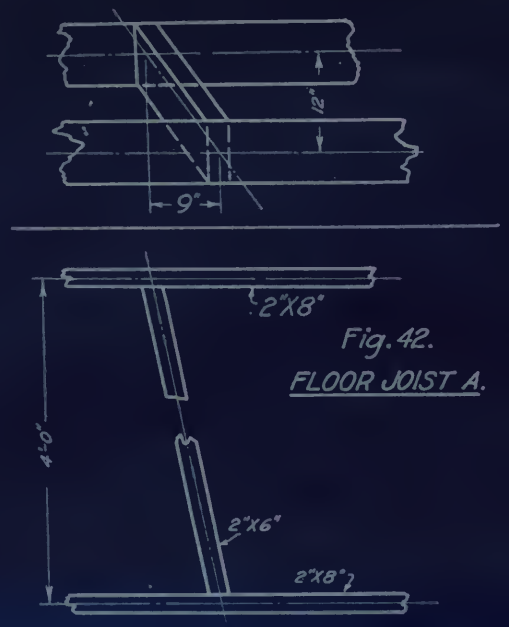


Fig. 42.
FLOOR JOIST A.

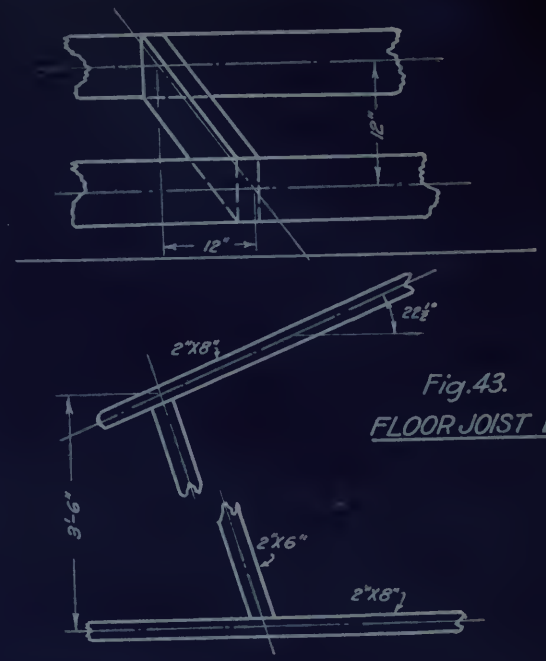


Fig. 43.
FLOOR JOIST B.

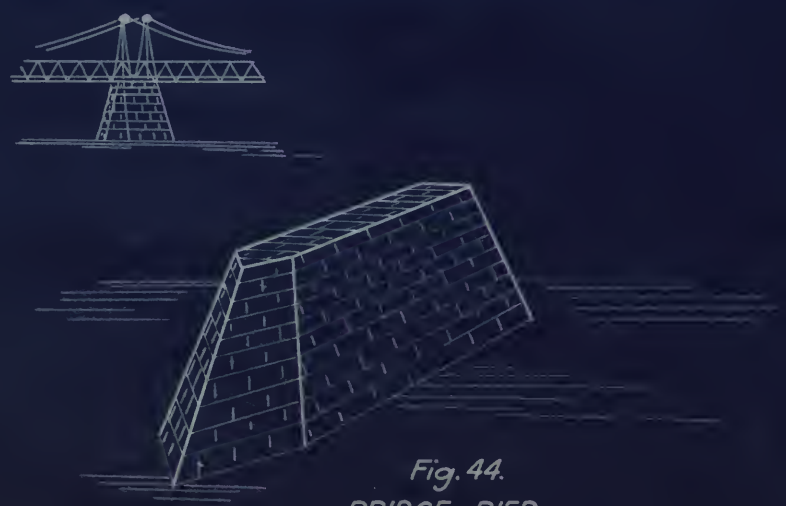

Fig. 44.
BRIDGE PIER.

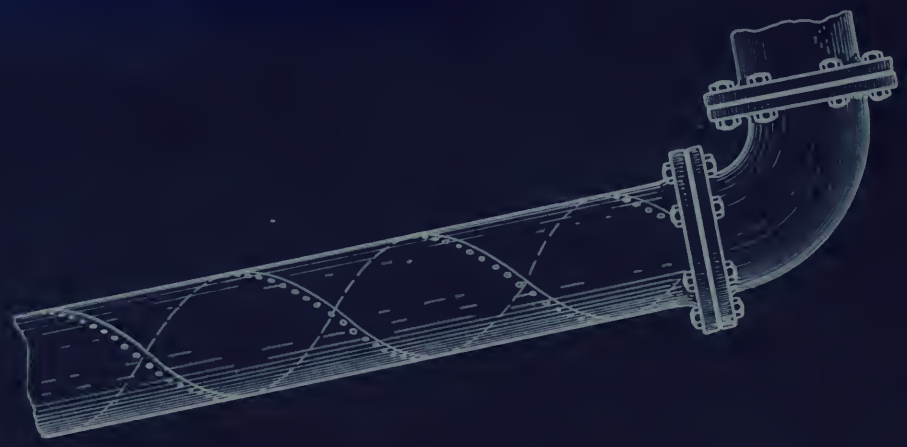

Fig. 45.
SPIRAL RIVETED PIPE.

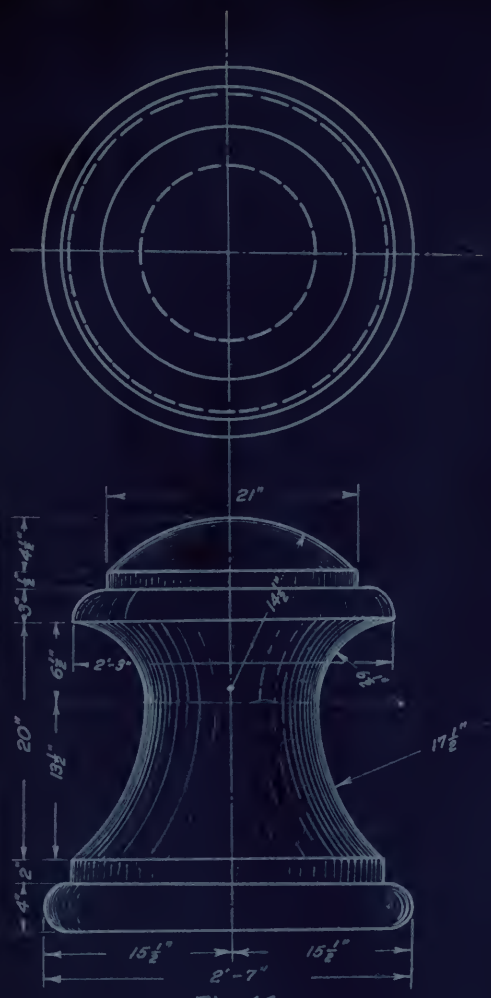


Fig. 46.

CAST IRON MARKING POST.

[(2) Scale, 1" = 1'-0"]

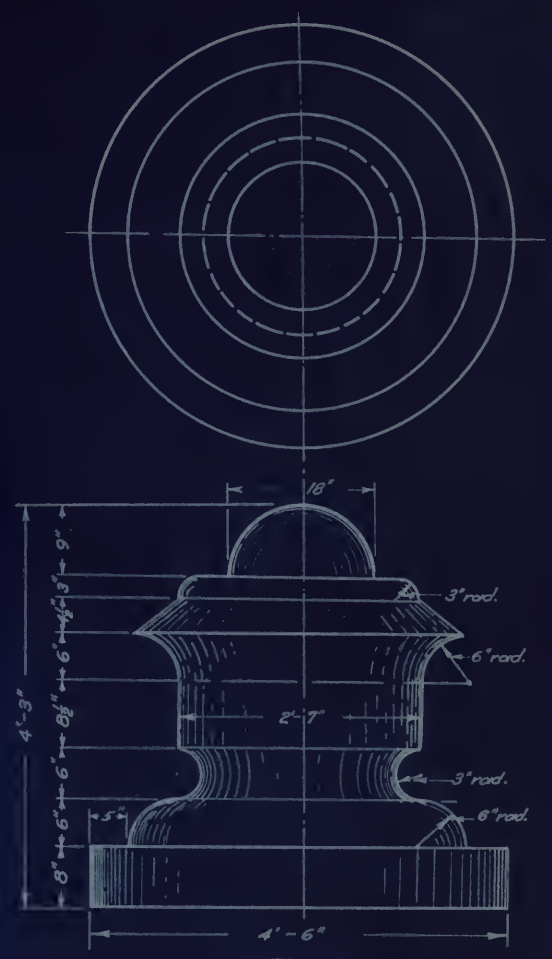


Fig. 47.

MARBLE PILLAR CAP.

[(2). Scale, ¾" = 1'-0"]

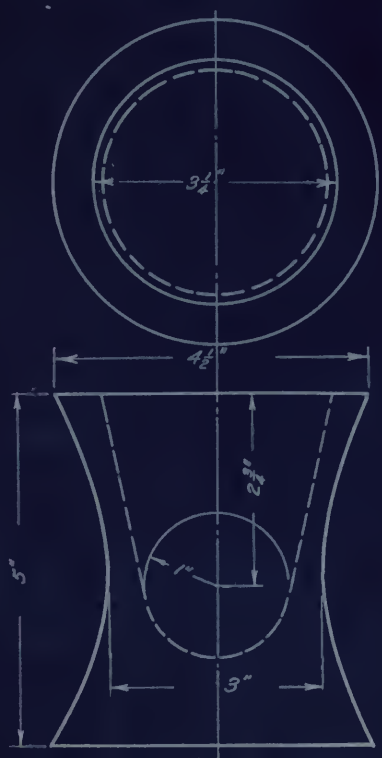


Fig. 48.

MORTAR.

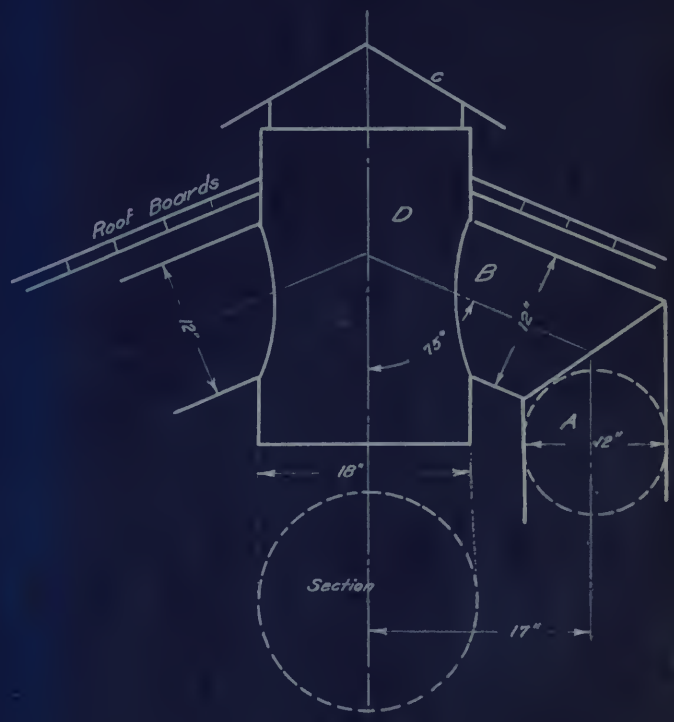


Fig. 49.

VENTILATOR CONNECTIONS.

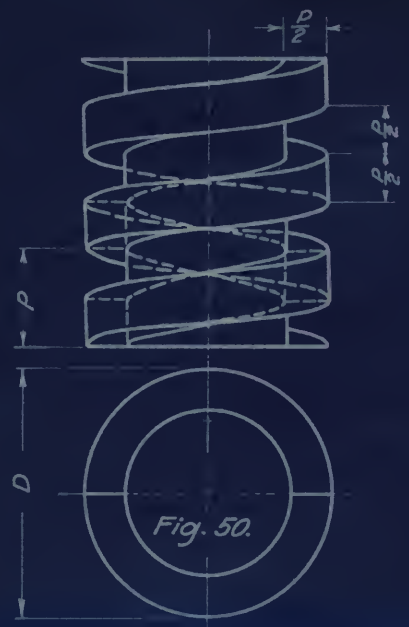


SQUARE THREADED SCREW.

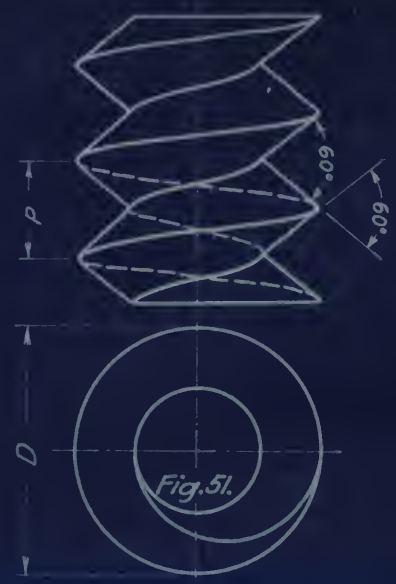


V-THREADED SCREW

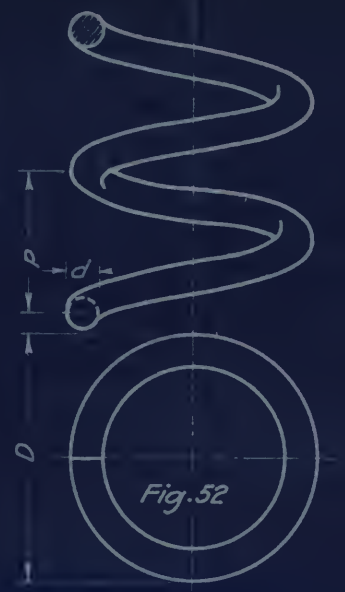


ROUND HELICAL SPRING.

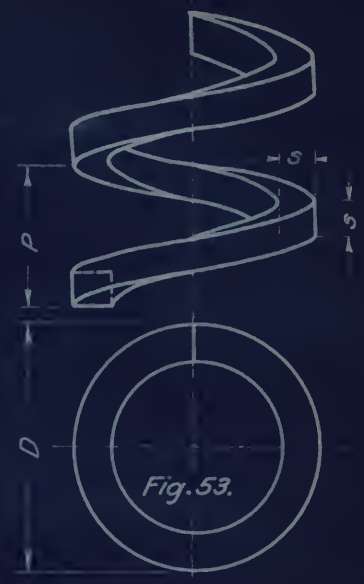


SQUARE HELICAL SPRING.

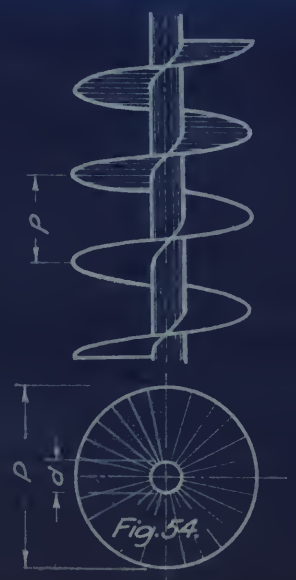


RIGHT METAL SPIRE

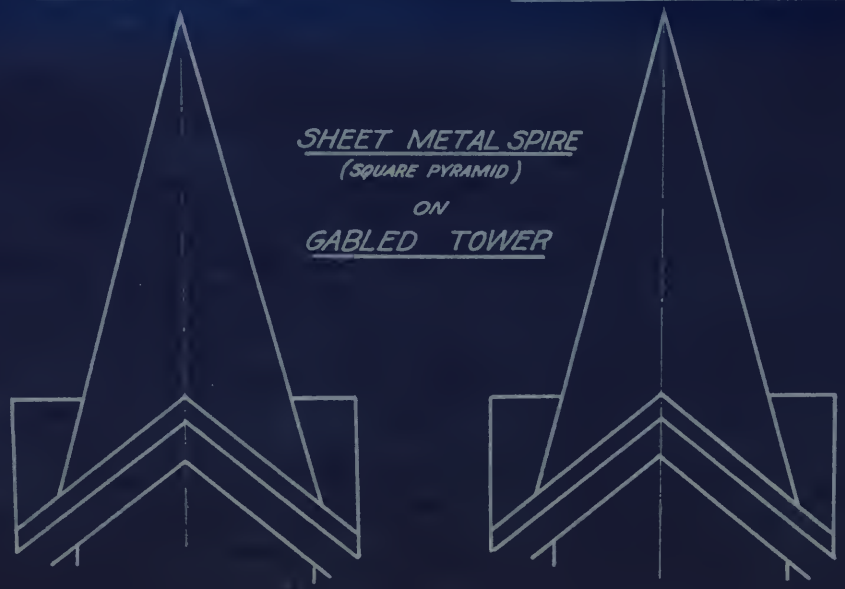


Fig. 55


WOOD SCREW.

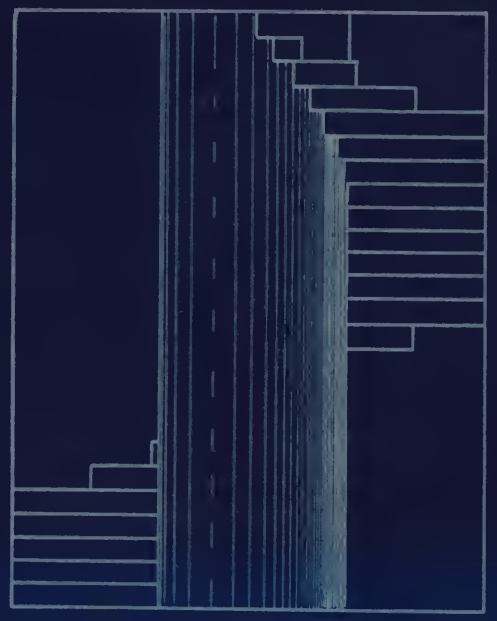

Fig. 57.

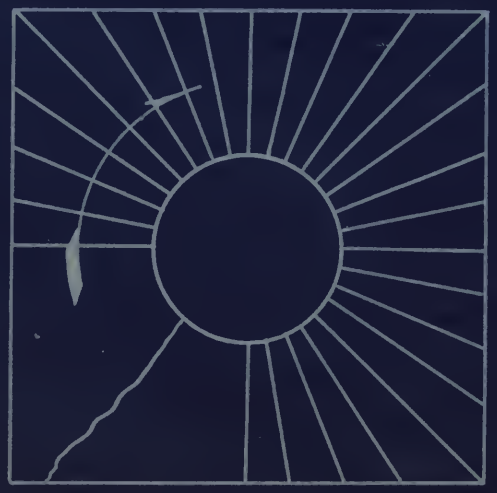

HELICOIDAL STAIRWAY.

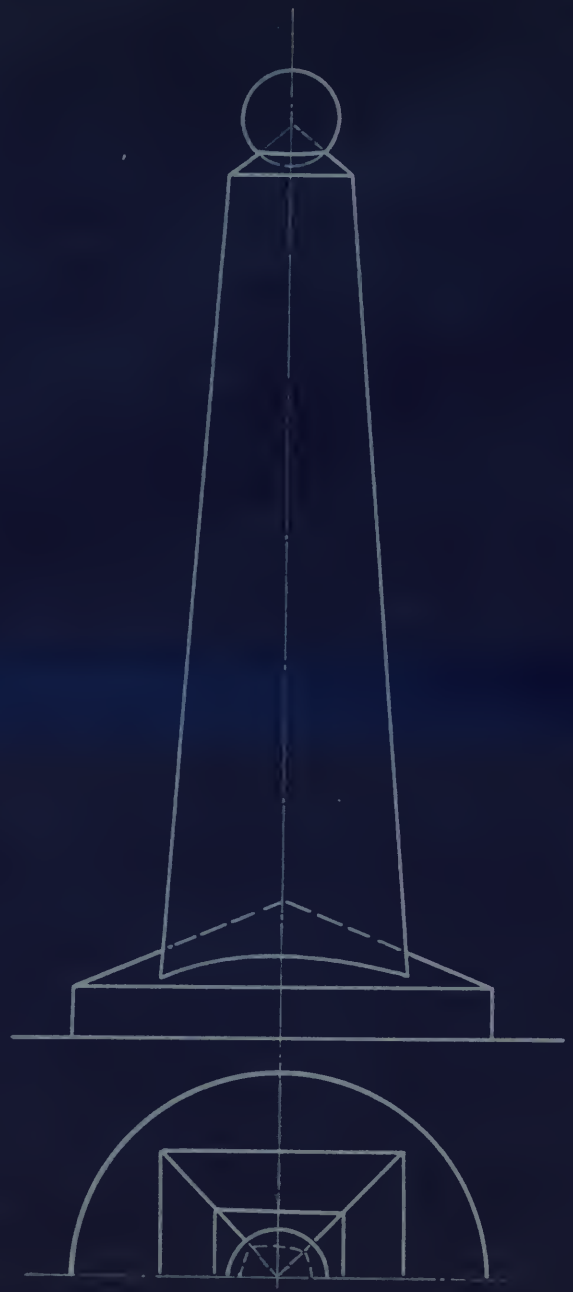

Fig. 59.

Fig. 58.

HELICOIDAL STAIRWAY.

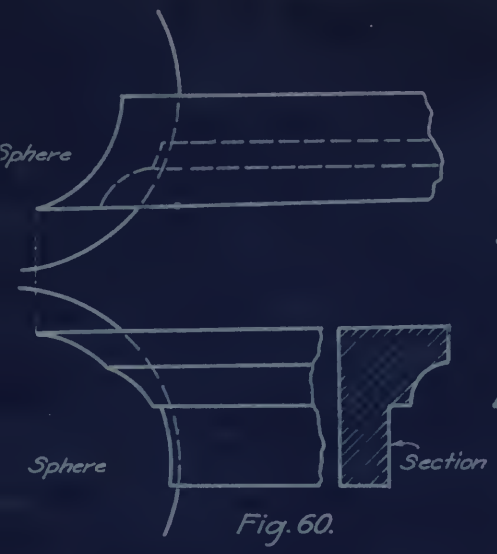


Fig. 60.

MOULDING INTERSECTION.


Fig. 61.

METAL MOULDING PANEL.

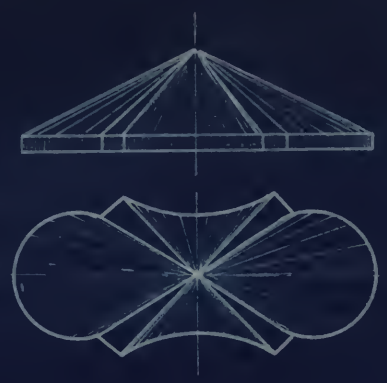

Fig. 62.

METAL CORNICE ORNAMENT.

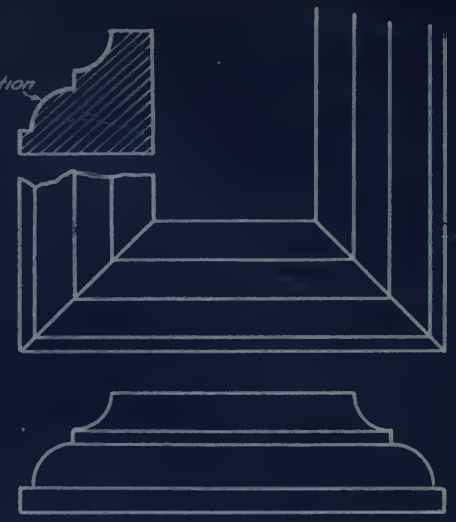


Fig. 63.

METAL PILLAR BASE.

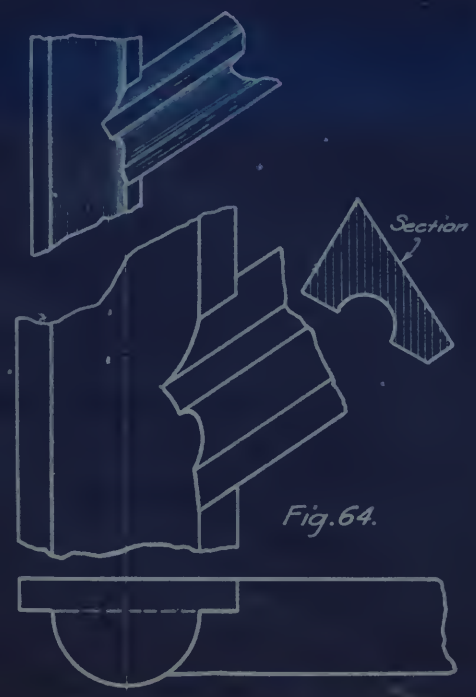


Fig. 64.

METAL GABLE MOULDING


Fig. 65.

COFFEE POT.

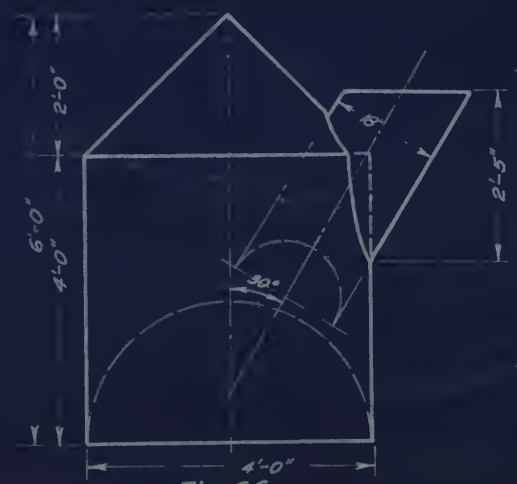


Fig. 66.

IRON POURING POT.

Fig. 67.

PIPE FITTING.

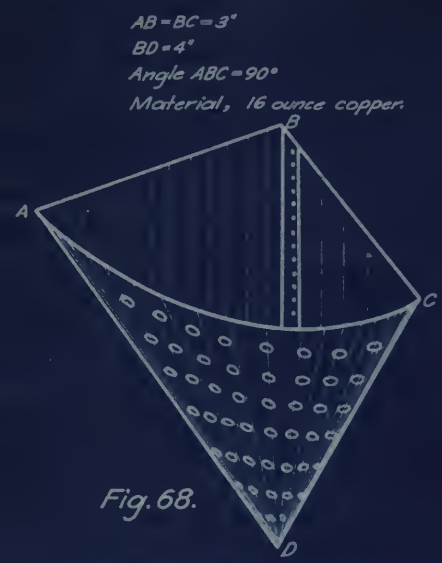


Fig. 68.

COPPER SINK DRAINER.

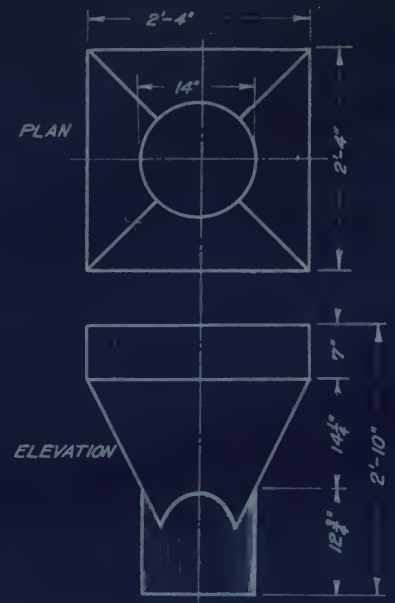


Fig. 69.

SHEET IRON TRANSITION PIECE.

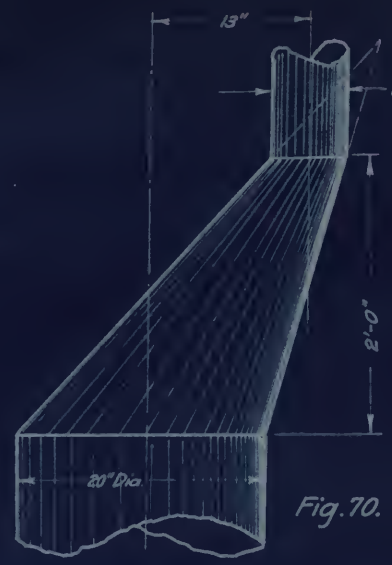


Fig. 70.

CONICAL OFFSET PIPE.

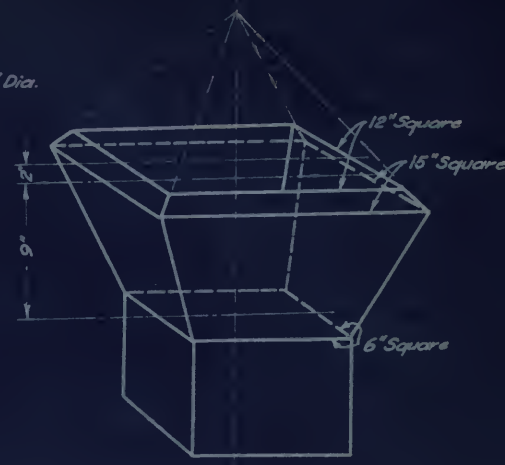


Fig. 71.

BUTT-JOINTED HOPPER.

SQUARE.

[(2) Scale, 3" = 1'-0"]

Fig. 72.

FLANGE FOR CYLINDRICAL PIPE.

(Passing thru inclined roof.)


Fig. 73.

TIN BATH TUB.


Fig. 74.

TIN TEA POT.

Fig. 75.

STEAM EXAUST HEAD.

Fig. 76

CONICAL ROOF FLANGE.

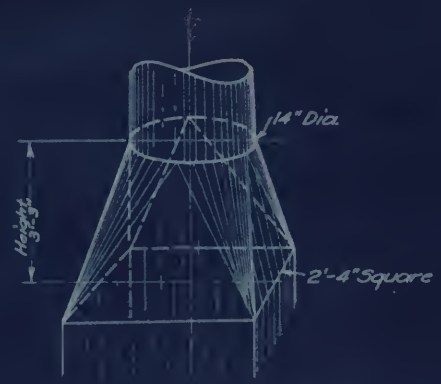


Fig. 77.

TRANSITION CONNECTOR.

FOR SQUARE AND ROUND PIPES.


Fig. 78.

METAL OIL CAN.

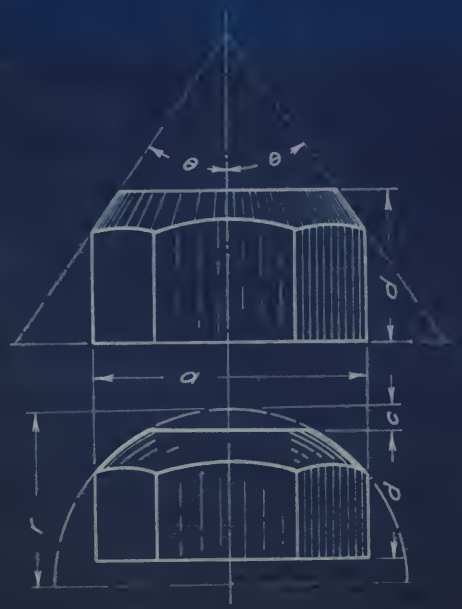


Fig. 79.

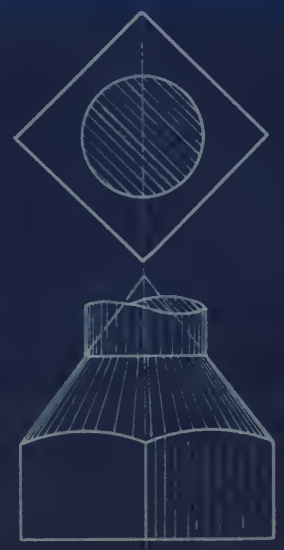

Fig. 80.

Fig. 81

METAL SUGAR SCOOP.

Fig. 82.

TIN MEASURE.


Fig. 83.

SQUARE HOPPER
ON
ROTARY CYLINDRICAL DRYER.

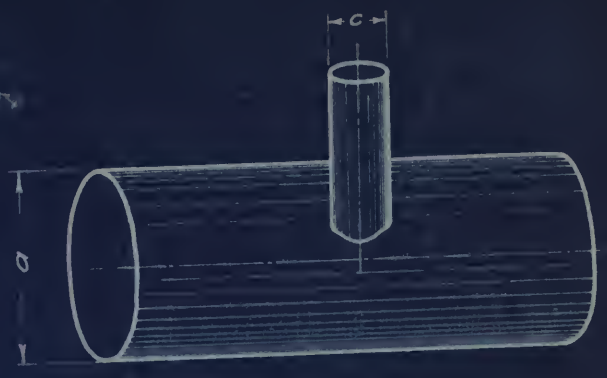


Fig. 84.

INTERSECTING AIR SHAFTS.
Circular section.


Fig. 85.

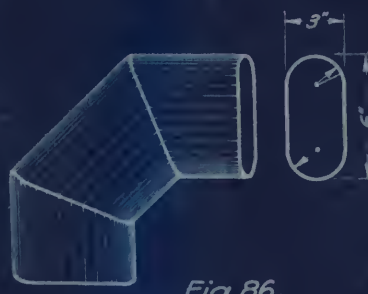


Fig. 86.


Fig. 87

FURNACE AND STOVE-PIPE ELBOWS.


Fig. 88.

LOCOMOTIVE SMOKE STACK

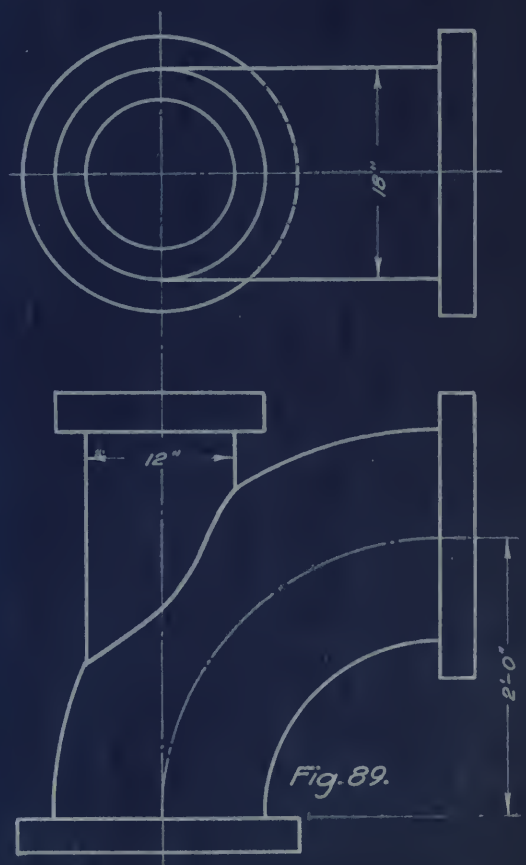


Fig. 89.

FLANGED PIPE CONNECTION.

Fig. 90.

TIN FUNNEL.

Fig. 91.

SCALE SCOOP.

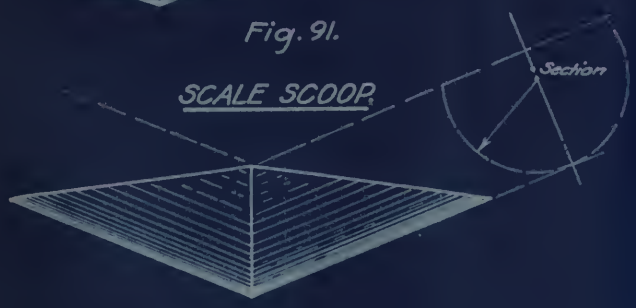


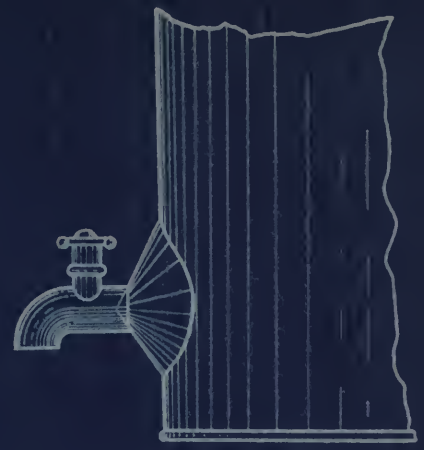

Fig. 92.

WATER TANK WITH CONICAL BOSS.

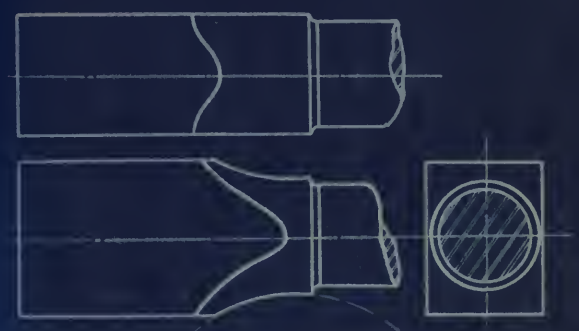


Fig. 93.

CONNECTING-ROD END.

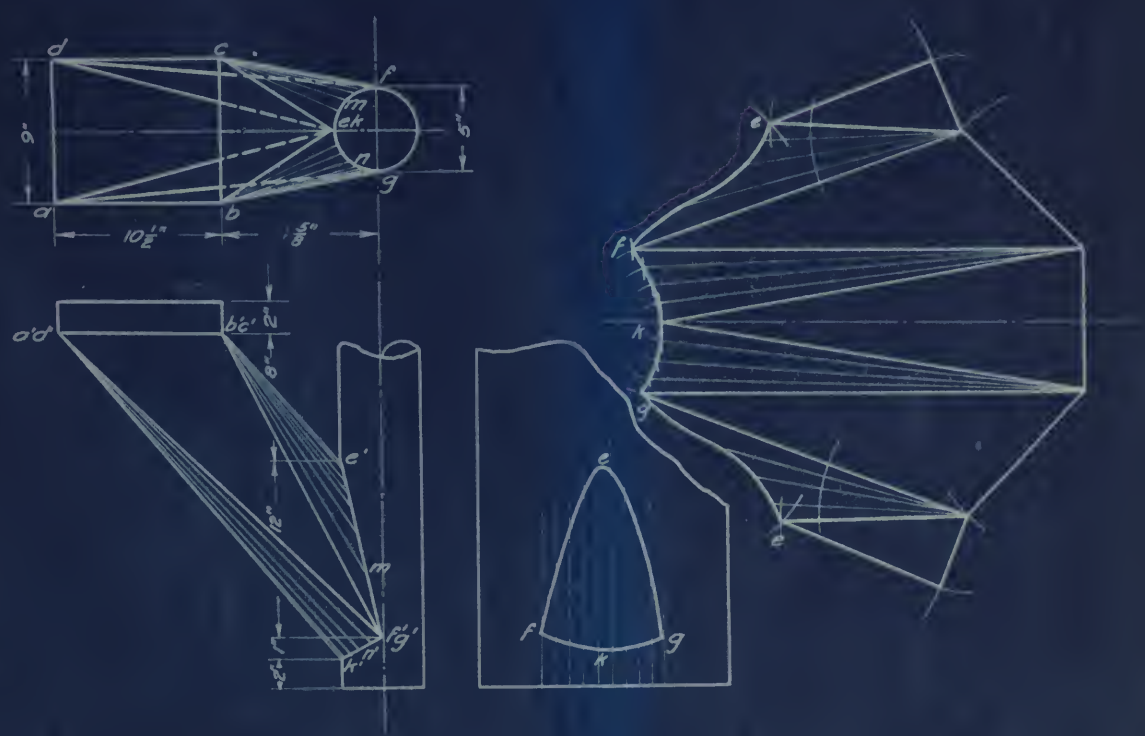


Fig. 94.

TRANSITION CONNECTION.

FROM RECTANGULAR TO ROUND PIPE.


Fig. 95.

FURNACE TRANSITION PIECE.
(For partitions)

Fig. 96.

FURNACE CONNECTION.

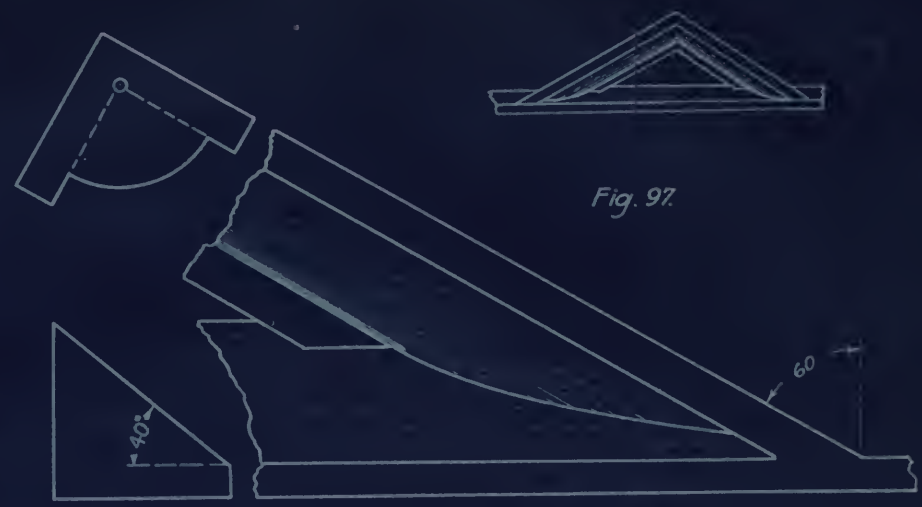


Fig. 97.

GABLE MOULDING ON A WASH.

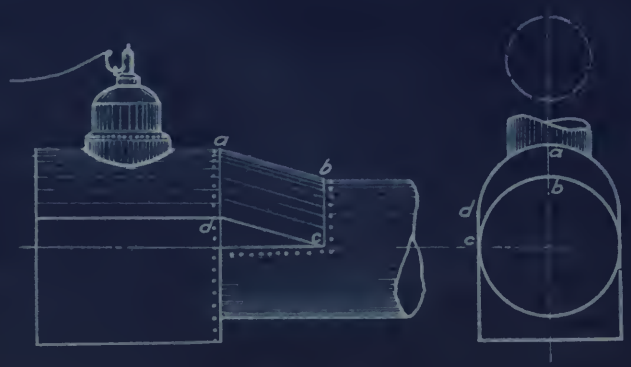


Fig. 98.

LOCOMOTIVE SLOPE SHEET.
(Cylindrical.)

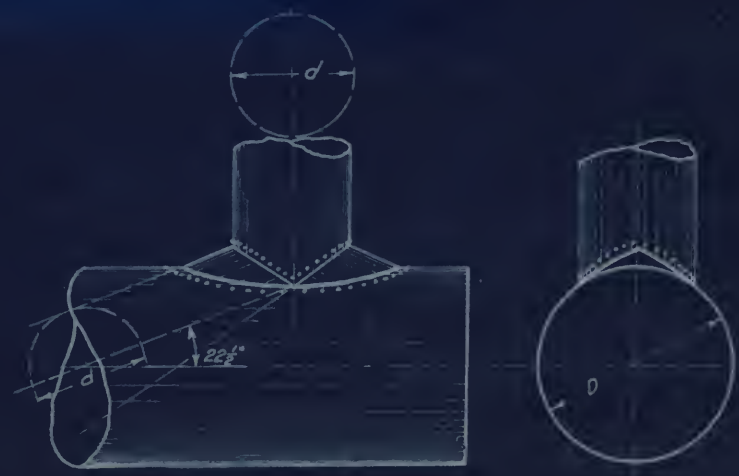


Fig. 99.

GUSSET PLATES FOR BOILER STACK.