UC-NRLF
$B 26 116

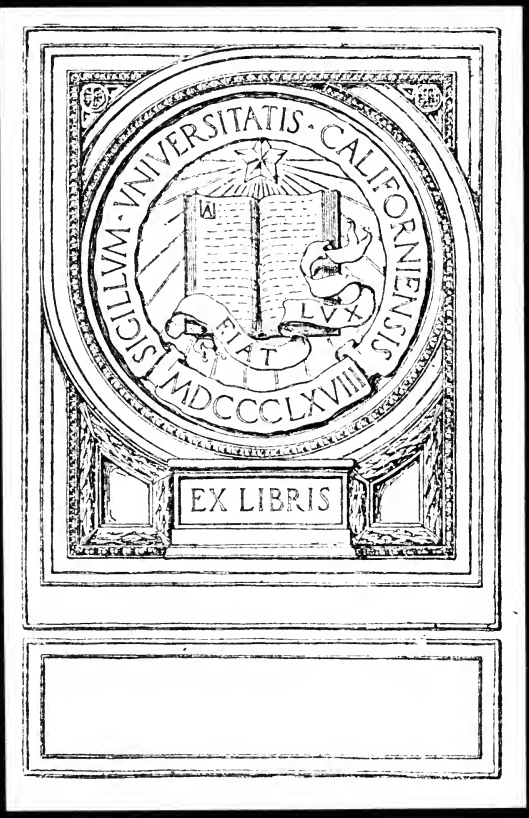
SIGILLVM · VNIVERSITATIS · CALIFORNIENSIS
FIAT LVX
MDCCCLXVIII
EX LIBRIS

WORKS OF PROF. H. W. SPANGLER

PUBLISHED BY

JOHN WILEY & SONS.

Valve-Gears

Designed as a Text-book giving those parts of the Theory of Valve-gears necessary to a clear understanding of the subject. 8vo, xii + 179 pages, 109 figures, cloth, $2.50.

Notes on Thermodynamics.

The Derivation of the Fundamental Principles of Thermodynamics and their Application to Numerical Problems. Fourth Edition. 12mo, vii+75 pages, 24 figures, cloth, $1.00.

Elements of Steam Engineering.

By H. W. SPANGLER, Whitney Professor of Dynamical Engineering in the University of Pennsylvania, ARTHUR M. GREENE, Jr., Professor of Mechanical Engineering in the University of Missouri, and S. M. MARSHALL, B.S. in E.E. Second Edition, Revised and Enlarged. 8vo, v + 297 pages, 290 figures, cloth, $3.00.

VALVE-GEARS.

BY

H. W. SPANGLER,

Whitney Professor of Mechanical Engineering in the University of Pennsylvania.

Analysis by the Zeuner Diagram.

ONE HUNDRED AND NINE ILLUSTRATIONS.

SECOND EDITION, REVISED AND ENLARGED.
FOURTH THOUSAND.

NEW YORK:
JOHN WILEY & SONS.
LONDON:
CHAPMAN & HALL, LTD.
1910

TJ547
S7
1910

Copyright, 1890,
by
H. W. SPANGLER.

The Scientific Press
Robert Drummond and Company
New York

PREFACE.

THE writer, needing a book for class use which would give in one volume those parts of the theory of valve-gears necessary to a clear understanding of the subject, has prepared the following work.

All the standard text-books on the subject, the current periodicals, and working drawings have been called on for data and methods, and the works of Zeuner, Auchincloss, Rankine, Whitham, Halsey, Marks, Reuleaux, Bilgram, and the files of *Engineering* and the *Engineer* have been freely used in preparing the text; but the matter has been put in its present shape by the author.

A few of the methods are original, but others confronted with the same problems have probably solved them in the same or in a better way.

The designing of valve-gears is entirely a drawing-board process; and in all but radial gears, and to a great extent even there, the actual method of laying down the work is given.

The mathematical proof of the methods and results used is given whenever possible.

The problems are in most cases made up from the data of engines actually in use.

H. W. SPANGLER.

UNIVERSITY OF PENNSYLVANIA,
PHILADELPHIA, PA., August 20, 1890.

CONTENTS.

CHAPTER I.

PLAIN SLIDE VALVES.

1. Plain slide-valves, ... 1
2. Method of action of valve, ... 2
3. The eccentric, ... 2
4. Valve seat, face, and ports, ... 3
5. Lap, ... 4
6. To determine position of valve and piston, ... 4
7. Distance valve has moved from its central position, ... 5
8. Yoke-connection, ... 5
9. Valve-diagrams, ... 6
10. Angle between crank and eccentric 90°, ... 7

CHAPTER II.

THE ZEUNER DIAGRAM.

11. To draw the valve-diagram, ... 10
12. Point of admission, ... 10
13. Angular advance, ... 11
14. Lead, ... 12
15. From a given engine to draw the diagram, ... 13
16. Distribution of steam as shown from the diagram, ... 14
17. Separate diagrams for each end of the cylinder, ... 14

CHAPTER III.

OVERTRAVEL AND PROBLEMS.

18. Overtravel, ... 19
19. Problem 1, given *r*, *d*, cut-off and exhaust closure, ... 19
20. Problem 2, given lap, exhaust lap, lead and cut-off, ... 20

21. Problem 3, given cut-off, angle of lead, port and overtravel, . . 21
22. Problem 4, given cut-off, lead and port-opening, ... 22
23. When the piston and eccentric rods do not travel on parallel lines, . 23
24. To determine the position of the eccentric, ... 24
25. Effect of changing dimensions, ... 25

CHAPTER IV.

MODIFICATIONS OF THE PLAIN SLIDE-VALVE.

26. Double-ported valves, ... 28
27. Allen or Trick valve, ... 28
28. Piston-valves, ... 30
29. Taking steam inside, ... 30
30. Two or more valves, ... 31

CHAPTER V.

EQUALIZING CUT-OFF, LEAD, COMPRESSION, AND RELEASE.

31. Equalizing cut-off, ... 34
32. Equalizing cut-off and lead, ... 35
33. Equalizing exhaust and compression, ... 36
34. Circular diagram for determining movement of piston, . . . 37

CHAPTER VI.

DESIGNING AND SETTING VALVES.

35. Designing a plain slide-valve, ... 40
36. To determine approximate solution, ... 41
37. Equalizing lever, ... 43
38. To put the engine on the centre, ... 45
39. To set the valve, ... 45

CHAPTER VII.

THE STEPHENSON LINK.

40. The link, ... 47
41. Point of suspension, ... 48
42. Slip of block, ... 48
43. Radius of the link, ... 50
44. Kinds of links, ... 50

CHAPTER VIII.

THE VALVE-DIAGRAM.

45. Travel of the valve, ... 52
46. The valve-diagram, ... 55
47. Curve of centres, ... 56
48. To lay down the valve-diagram, ... 56
49. The virtual eccentric, ... 58
50. Designing the gear, ... 58
51. Valve-stem and eccentric-rod, ... 58
52. Length of link, ... 59
53. The hanger, ... 59
54. Link suspended at bottom or centre of chord, ... 60
55. Open and crossed rods, ... 61

CHAPTER IX.

EQUALIZING LEAD AND CUT-OFF.

56. Equalizing lead, ... 63
57. Equalizing cut-off, ... 65
58. To lay down the motion, ... 67
59. To lay down the centre of the travel of the valve, ... 67
60. To determine the centre of suspension of the hanger, ... 68
61. Position of stud, ... 68
62. Reducing slip, ... 70
63. Error of the Zeuner diagram, ... 70

CHAPTER X.

THE GOOCH MOTION.

64. The Gooch link, ... 75
65. Movement of the valve, ... 76
66. Constant lead, ... 78
67. Radius of link, ... 78
68. Suspension-rod, ... 79
69. The hanger, ... 80
70. The valve-diagram, ... 80
71. To design a Gooch motion, ... 82

CHAPTER XI.

THE ALLEN AND FINK MOTIONS.

72. The Allen link-motion, ... 85
73. The valve-diagram, ... 85

74. The Fink motion, ... 87
75. Radius of link, ... 87
76. Suspension of link, ... 89
77. Movement of the valve, ... 89
78. The valve-diagram, ... 91
79. Radius-rod at a fixed point in the link, ... 92
80. Hanger for radius-rod, ... 92
81. Setting the eccentric, ... 93
82. Designing, ... 94
83. The Porter-Allen motion, ... 94

CHAPTER XII.

SHAFT REGULATION.

84. Throttling governors, ... 98
85. Changing angular advance, ... 98
86. Changing the eccentricity, ... 99
87. Changing eccentricity and angular advance, ... 99
88. Erie governor, ... 100
89. Armington and Sims, ... 101
90. Ball, ... 104
91. The valve, ... 105

CHAPTER XIII.

RADIAL GEARS—HACKWORTH'S.

92. Radial gears, ... 107
93. Hackworth's gear, ... 107
94. Constant lead, ... 108
95. Movement of the valve, ... 108
96. The valve-diagram, ... 109
97. To design the gear, ... 110
98. Right-hand rotation, ... 111
99. Errors of the diagram, ... 111
100. Port-opening, ... 113
101. Connecting up a Hackworth gear, ... 113
102. Attaching valve-stem outside, ... 113
103. Equalizing port-opening, ... 113
104. Equalizing the cut-off, ... 115

CHAPTER XIV.

RADIAL GEARS—MARSHALL, ANGSTROM, AND JOY.

105. Marshall's gear, ... 117
106. Errors of the Zeuner diagram, ... 117

107. Proportions of the gear, ... 119
108. Designing, ... 119
109. Angstrom's gear, ... 120
110. The diagrams, ... 121
111. Advantage and disadvantage of radial gears. 121
112. The Joy gear, ... 121
113. Movement of the valve, ... 123
114. Errors of the Zeuner diagram, ... 124

CHAPTER XV.

DOUBLE VALVES—GRIDIRON VALVE.

115. Kinds of double valves, ... 127
116. Gridiron valve, ... 127
117. Polonceau valve, ... 128
118. Diagram for gridiron valve, ... 129
119. Combined diagrams for both eccentrics, ... 130
120. Limits of cut-off, ... 131
121. Width of ports, ... 132
122. Angle of advance, ... 132
123. Varying cut-off, ... 133
124. Arrangement used for varying cut-off, ... 134
125. Width of cut-off valve, ... 134
126. Varying width of block, ... 135

CHAPTER XVI.

RELATIVE MOVEMENT—POLONCEAU GEAR.

127. One valve on the back of another, ... 137
128 Relative valve-circle, ... 138
129. To draw the relative valve-circle, ... 138
130. The Polonceau valve, ... 139
131. The Polonceau gear, ... 139
132. Valve-diagram, ... 139
133. Limits of cut-off, ... 140
134. Dimensions of valve, ... 141

CHAPTER XVII.

BUCKEYE GEAR.

135. The valve, ... 143
136. The eccentrics and connections, ... 143
137. Movement of the valves, ... 144

138. Cut-off valve-diagram, ... 145
139. Changing cut-off, ... 145
140. The governor, ... 146

CHAPTER XVIII.

MEYER VALVE AND GUINOTTE GEAR.

141. The Meyer valve, ... 148
142. Changing the distance between the blocks, ... 148
143. Designing a Meyer valve, ... 150
144. Length of cut-off blocks, ... 151
145. Cut-off with inside edges, ... 151
146. Guinotte's gear, ... 152
147. Movement of the valve, ... 153
148. To draw the valve diagram, ... 154

CHAPTER XIX.

BILGRAM, REULEAUX, AND ELLIPTICAL DIAGRAMS.

149. Bilgram diagram, ... 157
150. Problems, ... 158
151. Reuleaux's diagram, ... 160
152. Problems, ... 161
153. Elliptical diagrams, ... 163
154. Velocity of the valve, ... 164

CHAPTER XX.

CORLISS VALVE-GEAR.

155. Hamilton-Corliss engine, ... 166
156. Movement of the valve, ... 168
157. Proportioning the parts, ... 169

SYMBOLS.

A. Abscissa of the end of that diameter of the valve-diagram which passes through the origin.

B. Ordinate of the end of that diameter of the valve-diagram which passes through the origin.

L. Distance from outside to outside of ports in top of Meyer valve.

R. Radius of crank.

a. Length of eccentric-rod in Fink gear to attachment of suspension-rod.

b. Length of connecting-rod.
Length of eccentric-rod in Fink gear from attachment of suspension-rod to link.

c. One half the chord of the link.
Distance from cross-head to point in connecting-rod at which radius-rod in Joy gear is attached.

e. Width of port in upper valve-seat of double valves.

f. Width of port in upper valve of double valves.

g. Length of eccentric-rods.

g_1. Length of radius-rod in link-motions.

g_2. Length of valve-stem.

h. Length of hanger in link-motions.

i. Lead.

l. Lap.

l_1. Length of radius-rod from closed curve to open one in radial gears.

l_2. Distance from end of valve connecting-rod to open curve in radial gears.

l_3. Distance from point on connecting-rod to point on open curve in the Joy gear.

l_4. Distance from point on connecting-rod to point of attachment of secondary radius-rod in Joy gear.

n. Revolutions of the engine per minute.

p. Port-opening.

r. Radius of eccentric or eccentricity.

r_1. Throw of eccentric moving second or cut-off valve; and in link-motions, where unequal eccentricities are used, of the second one.

r_x. Diameter of the relative valve-circle with double valves.

s. Distance the cut-off valve has to move from its central position to close the port.

u. Distance between the centre of the link and the end of the valve-stem or radius-rod in Stephenson, Gooch, and Fink links. In Allen motion distance end of radius-rod has moved from its central position.

u_1. In Allen motion, distance the link has moved from its central position.

x. Distance the valve has moved from its central position for any position of the crank.

y. Half the distance between the blocks in a Meyer gear.

α. Fixed angle between the crank and the eccentric, angle between eccentric-rod and the centre line of its motion in a Fink motion, and angle of path of end of radius-rod in radial gears.

β. Ninety degrees less than the angle between the dead-point and point of cut-off.

γ. } Angles used in finding movement of the valve in link-mo-
γ'. } tions.

δ. Angular advance of main eccentric.

δ_1. Angular advance of cut-off eccentric or when different angles are used in link-motions of the second one.

δ_2. In Guinotte gear angular advance of third eccentric.

θ. Angle described by hanger in link-motions.
Angle used in Joy gear demonstration.

ϕ. Angle used in Joy gear demonstration.
Auxiliary angle used in proving the construction of Problem 4, page 22.

σ. Angle crank is moved in a Stephenson link to equalize lead.

ω. Angle the crank has moved from its central position

UNIV. OF CALIFORNIA

VALVE-GEARS.

CHAPTER I.

PLAIN SLIDE-VALVES.

1. Plain Slide-Valves.—In an ordinary steam-engine steam is admitted to and released from each end of the steam-cylinder by a valve actuated by the engine itself. As the economical working of an engine depends to a very great extent upon the proper admission and release of the steam, a study of the valves used and of the methods of moving them is important.

Fig. 1 is a sketch of the valve ordinarily used, which is often called a *D* slide-valve from its shape and method of

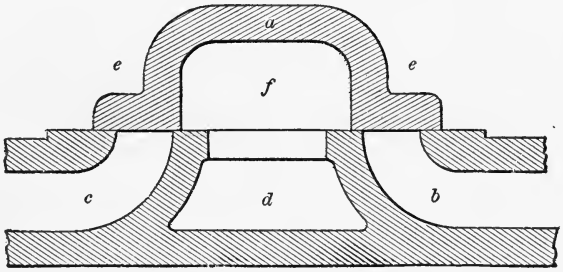

FIG. 1.

action. *a* is the valve, *b* is the passage leading to one end of the cylinder, and *c* that leading to the other. These are called the steam-passages. *d* is a passage leading to the open air or to a condenser, and is called the exhaust-passage. The space *e*, or valve-chest, is filled with steam, and is in direct communication with the boiler.

2. Method of Action of Valve.—The action of the valve is as follows: Suppose the valve *a* is moved to the right. Steam passes from the space *e* through *c* to the left-hand end of the cylinder, and moves the piston to the right. Any steam that may be in the right-hand end of the cylinder passes through the passage *b* into the space *f* under the valve, and thence through *d* away. When the piston has reached the end of its stroke to the right, the valve *a* has moved back far enough towards the left to allow steam from *e* to pass into *b*, and the passage *c* is connected with *f*, thus causing the piston to move towards the left.

3. The Eccentric.—The mechanism connecting the valve and piston in its simplest form is shown in Fig. 2. The rod

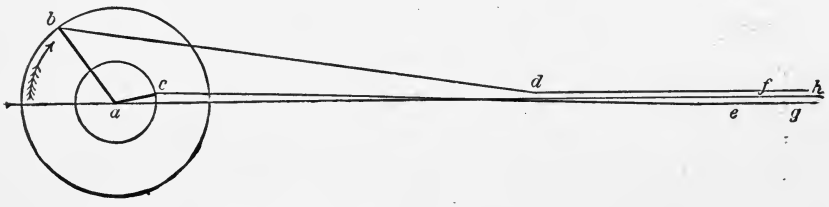

FIG. 2.

ge is connected to the valve and is called the valve-stem. The rod *ec* connects the end of the valve-stem with the crank *ac*, turning around the point *a*, which is the centre of the shaft. The rod *ec* is called the eccentric-rod. *fd* is a rod connected at one end to the piston, and is called the piston-rod. *db* is a rod connecting the end *d* of the piston-rod with the end *b* of a crank *ab*, which is rigidly connected to *ac*, and turns with it about *a*. *db* is called the connecting-rod. The crank *ab* will be spoken of hereafter as "the crank," and the crank *ac*, which is the mechanical equivalent of the eccentric, will be spoken of as "the eccentric." The rods *ge* and *fd* are supposed to move along the line *ah*, but are separated in the figure for clearness.

The arrangement actually used is shown in Fig. 3. The inner circle with *a* as a centre is the shaft. The inner circle having *c* as a centre is the eccentric *b* or the eccentric

sheave, and is keyed to the shaft and turns with it. The outer broken circle having *c* as a centre is the eccentric strap *fg*, which turns easily on the sheave *c*, but is rigidly

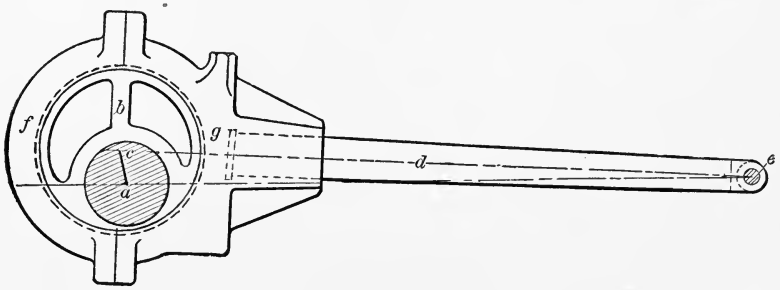

FIG. 3.

attached to the bar *d*. If the shaft turns, the movement of point *e* along the line *ae* would be exactly the same with this arrangement as though *ac* were a crank and *ec* a rod, and the representation in Fig. 2 is practically the same as in Fig. 3. The distance *ac* is called the eccentricity.

4. **Valve-Seat, Face, and Ports.**—Referring again to Fig. 1, that part on which the valve moves is called the valve-seat. That part of the valve sliding over the seat is called the valve-face. The openings through the valve-seat

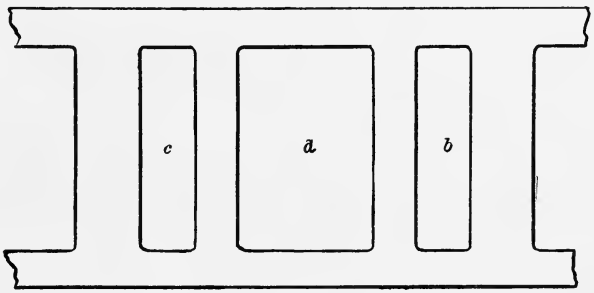

FIG. 4.

to the passages *b*, *c*, and *d* are called the ports, those leading to *b* and *c* being the steam-ports, and to *d* the exhaust-port. A plan of the valve-seat is shown in Fig. 4, in which *c* and *b* are the steam-ports, and *d* the exhaust-port.

5. **Lap.**—In Fig. 1 the valve is shown as covering both ports equally, and is said to be in its middle position. Fig. 5 shows one end of the valve to a larger scale. The distance

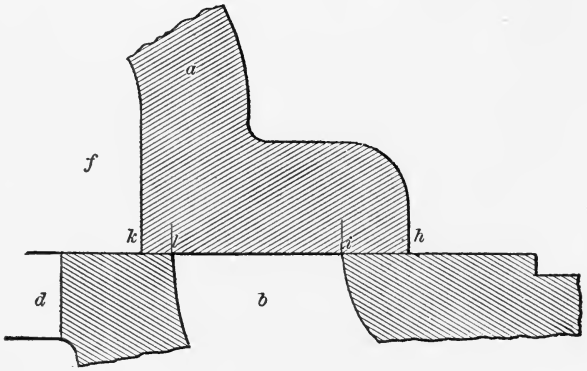

FIG. 5.

ih that the valve overlaps the outside of the steam-port when in mid position is called the steam or outside lap, or simply the lap. The distance *kl* that the valve overlaps the inside edge of the steam-port is called the inside or exhaust-lap. It is evident that before the passage *b* can receive steam the valve must move to the left a distance *ih*, or the lap; and before *b* can be open to exhaust, the valve must move to the right a distance *kl*, or the exhaust-lap, from its middle position.

6. **To Determine Position of Valve and Piston.**—In Fig. 6 *a* is the centre of the shaft, *ab* one position of the

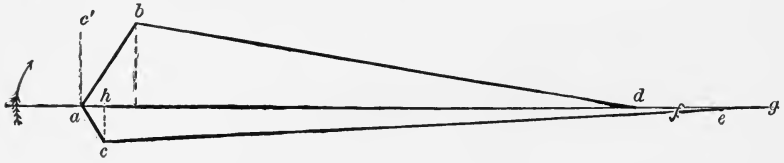

FIG. 6.

crank, and *ac* the corresponding position of the eccentric. If the length of the connecting-rod *bd*, the length of the piston-rod *df*, and the direction *af* of the piston travel are known, the position of the piston corresponding to the posi-

tion *ab* of the crank can be determined by laying off from *b* a distance *bd* equal to the length of the connecting-rod, thus determining the position of *d*, and from *d* laying off the length of the piston-rod to *f*, thus determining the position of the piston. Similarly, if the length of the eccentric-rod *ce* and of the valve-stem *eg* are known, the position of the valve can be determined.

7. Distance Valve has moved from its Central Position.—In most engines *ec* is very long as compared with *ac*. When *ac* is vertical, as at *ac'*, the valve is practically in its middle position, and the distance it is from its middle position when the eccentric occupies any position, as *ac*, can be represented by *ah*, the line *ch* being perpendicular to *hf*. In

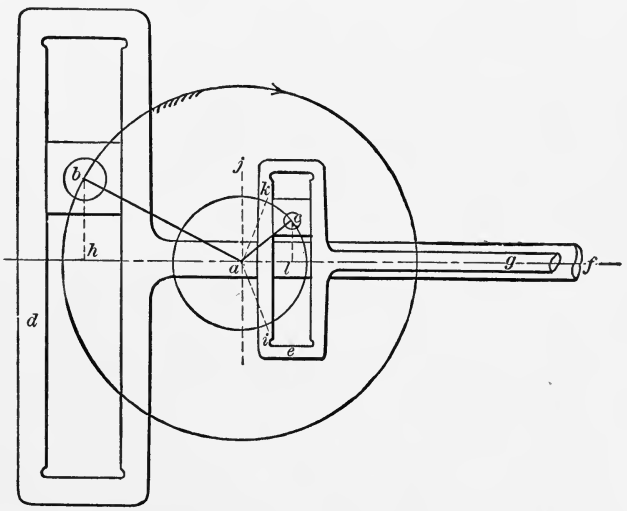

FIG. 7.

the case of the piston this is not so, as the rod *bd* is generally four to six times *ab*, and the position of the piston materially depends on *bd*. However, if the point *b* can always be determined, the position of the piston can also.

8. Yoke Connection.—Fig. 7 is a case in which both valve-stem and piston-rod are connected to slotted crossheads, the connections being known as yoke connections. The dis-

tance the piston has moved from its central position is *ah*, and the distance that the valve has moved is *al*. In the figure the piston-rod *f* has attached to its end the slotted piece *d*, in which the block *b* attached to the crank moves. The end of the valve-stem *g* has a similar piece *e* attached, in which the block *c* attached to the eccentric *ac* moves.

To show that *ac* is the right position for the eccentric corresponding to the position *ab* of the crank, if the engine is to turn in the direction of the arrow, let *ah* be one dead point, that is, one position where the crank and connecting-rod are in the same straight line. As the piston is now to move to the right, the valve must have already moved to the right a sufficient distance to admit steam to the left-hand end of the cylinder, and should be moving in the direction that would open the port still wider. This could occur only if the eccentric occupied the position indicated by *ak*, and could not occur if the eccentric was at *ai*. The angle *kah* is therefore the fixed angle between the crank and the eccentric, and when the crank reaches *ab* the eccentric is at *ac*. This combination is usually spoken of as a valve with an infinite eccentric-rod, and a piston with an infinite connecting-rod.

9. Valve-Diagrams.—Valve-diagrams are used to show at a glance the movement of the valve for any movement of the piston, and the various events occurring in a stroke of the piston. Numerous forms of diagrams are used, all more or less accurate and convenient, the form used throughout this work being that proposed and developed by Dr. Gustav Zeuner in his admirable treatise on valve-gears, as it is by far the most convenient to use of any that have been prepared, and is as accurate as any of them.

The diagram for the case of the slotted connections above described will first be determined, and if any ordinary connecting-rod, as shown in Fig. 6, be used instead of that shown in Fig. 7, the position of the piston corresponding to any position of the crank can readily be found as shown in

Fig. 6. For Fig. 7 the diagram to be determined is exactly correct.

Suppose the crank to start from the position *ah* of Fig. 7, and to move through the angle ω to the position *ab*. Call the fixed angle between the crank and the eccentric α. Then the distance the valve is from its central position is $al = ac \cos cal = ac \cos (180 - \alpha - \omega) = - ac \cos (\alpha + \omega)$, or calling $ac = r$ and $al = x$,

$$x = - r \cos (\alpha + \omega). \quad . \quad . \quad . \quad . \quad . \quad . \quad . \quad . \quad (1)$$

If when the crank is just on its dead point the valve is just in its middle position, the angle $\alpha = 90$, and

$$x = - r \cos (90 + \omega) = r \sin \omega ; \quad . \quad . \quad . \quad (2)$$

and this case we will examine first.

10. Angle between Crank and Eccentric 90°.—In Fig. 8 let *ah* represent the position of the crank at one dead-

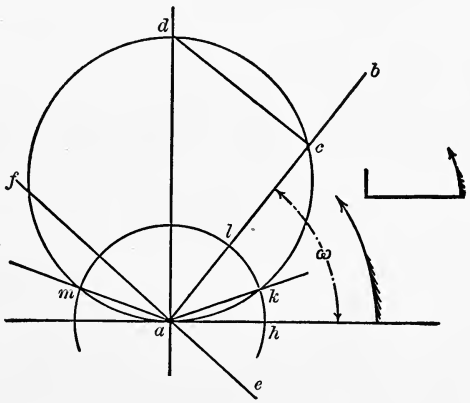

Fig. 8.

point, and suppose the crank turns around *a* against the hands of a clock. Let *ab* be any other position of the crank after it has moved from the dead-point the angle ω. As we have already seen, the valve has moved from its central position a distance $x = r \sin \omega$.

On the line ab lay off the distance $ac = r \sin \omega$, and for every other position of the crank lay off the corresponding value of x. The result will be a series of points, the curve passing through which will be a circle whose diameter is r, and whose centre is on ad. For if we lay off on ad a distance r, and draw a circle on ad as a diameter, then if c is any point on the circumference, the angle dca is a right angle, and

$$ac = r \cos dac = r \cos (90 - \omega) = r \sin \omega = x.$$

QUESTIONS.

1. Draw a plain D slide-valve in its middle position, and name all the parts.

2. How must the valve move to cause the engine to run?

3. Sketch the arrangement by which the valve is moved.

4. What is meant by lap?

5. If the valve took steam inside and exhausted outside, what would then be the steam-lap?

6. In a given engine, how determine the actual position of the valve corresponding to a given piston or crank position?

7. Why can the length of the eccentric-rod be neglected in this work?

8. What is the objection to neglecting the length of the connecting-rod in determining the distance the piston has travelled for any movement of the crank?

9. What should be the relative position of the crank and eccentric to turn in any given direction, the connections being as shown in Fig. 6?

10. What is meant by an infinite connecting-rod, and what is its equivalent as far as the movement of the piston is concerned?

11. What is the use of valve-diagrams?

12. For any given movement ω of the crank from its dead-point, how far has the valve moved from its central position?

13. How would you construct a valve-diagram, having given the distance the valve has moved from its central position for various values of ω?

PROBLEMS.

1. Given the crank 10 inches, connecting-rod 50 inches, and suppose the crank to be on that dead-point farthest from the cylinder, how far has the piston moved for each 30° of its revolution?

2. In a parallel column, put down the distance the piston would have moved had the piston and crank been connected by a yoke.

3. Given the eccentricity equal to 3 inches, and the angle between the crank and eccentric equal to 135°, calculate the distance the valve has moved for each 30° of movement of the crank, plot the points, and draw the valve-diagram.

CHAPTER II.

THE ZEUNER DIAGRAM.

11. To draw the Valve-Diagram.—Instead, therefore, of laying down the points separately, if on *ad*, Fig. 8, we lay off *r* and draw a circle on *r* as a diameter, we can determine the distance the valve has travelled from its middle position for any movement of the crank by drawing the position of the crank; and that part of the crank line lying between *a* and the circumference of the circle is the movement of the valve.

When the crank has reached any point below the horizontal line as *ae*, the distance the valve has moved is *af*, and is measured in the opposite direction. Evidently, from the diagram, when the crank is on either dead-point, the valve is just at its central position, as we assumed to begin with.

12. Point of Admission.—From an inspection of Fig. 1, it is seen that if the crank is on the dead-point when the valve is in its central position and covers both ports, no steam could be admitted to the cylinder, and the engine would have no tendency to start.

We can determine from the diagram when steam will be admitted. From Fig. 5 it is evident that the distance the port into *b* is opened when the valve has moved a distance x from its middle position, is $x - ih = x -$ the lap, and calling p the port-opening and l the lap,

$$p = x - l. \quad . \quad . \quad . \quad . \quad . \quad . \quad . \quad . \quad (3)$$

That is, in Fig. 8, if from the distances *ac*, *ad*, *af*, etc., we take a distance equal to the lap, the portion remaining is the opening of the port. With *a* as a centre and a radius $al =$

the lap, draw the circle *hklm*, called the lap-circle. Then when the crank reaches *ab* the opening of the port is the distance *lc*, and similarly for any other position of the crank. At *ak* the lap just equals the movement of the valve, and the port is just about to open. When the crank reaches *am* the movement of the valve from its central position is again equal to the lap, and the valve has just closed the port to steam.

13. Angular Advance.—In order that the full pressure of the steam may come on the piston at the beginning of the stroke, the angle α between the crank and eccentric is never made equal to 90°, but something greater. The increase of the angle α is called the angular advance.

The angular advance may be defined as the angle between the actual position of the eccentric and that position of the eccentric which would bring the valve to its middle position, the crank being in both cases at a dead-point.

This angle of advance we will call δ, and $\alpha = 90 + \delta$. We have then, from equation (1),

$$x = -r \cos (90 + \delta + \omega) = r \sin (\delta + \omega). \quad . \quad . \quad (4)$$

Evidently, if $\omega = 90 - \delta$, $x = r$.

In Fig. 9 the same diagram has been drawn as in Fig. 8, but the diameter of the valve-circle has been moved through an angle $bad = \delta$.

In this figure, if $ac = x = r \sin (\delta + \omega)$, the circle still represents the valve-diagram. For $ad = r$ and dca is a right angle;

$$\therefore ac = ad \cos dac = r \cos (90 - \delta - \omega) = r \sin (\delta + \omega) = x.$$

It is to be remembered that the valve-diagram shows the movement of the valve for varying positions of the crank, and the centre line of the valve-diagram as *ad* in Fig. 9 is not the position of the eccentric when the crank is at *an*. The small diagram shows the relative position of the crank and eccentric to give the valve-diagram shown in the figure.

We see that by giving the eccentric angular advance we have simply moved the valve-circle about *a* through the angle δ. It will be seen that the port now opens when the

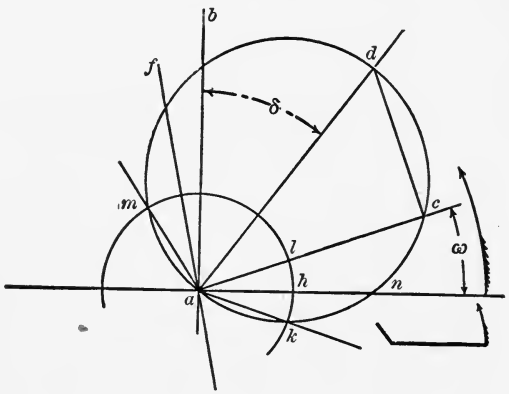

FIG. 9.

crank is at *ak*, and therefore steam-pressure is on the steam-piston at the beginning of the stroke. The angle *hak* is often called the angle of lead.

14. Lead.—When the crank is on the dead-point *an*, the distance *hn* is evidently the opening of the port. This distance is called the lead. The lead can therefore be defined as the amount the port is open to steam at the beginning of

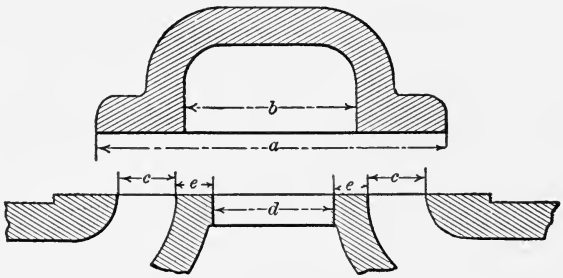

FIG. 10.

the stroke, or when the crank is on its dead-point. In the same way exhaust-lead is the amount the steam-port is open to exhaust at the beginning of the stroke.

15. From a given Engine to draw the Diagram.—Having any valve given moved by a single eccentric, we can lay down the valve-diagram and determine the points of admission and cut-off, the opening and closing of the exhaust, etc.

In Fig. 10, suppose the valve to be a inches over all and b inches inside, the steam-port to be c inches wide, the exhaust-port d inches and the bridges or material between the ports to be e, and the eccentricity to be r inches, and the

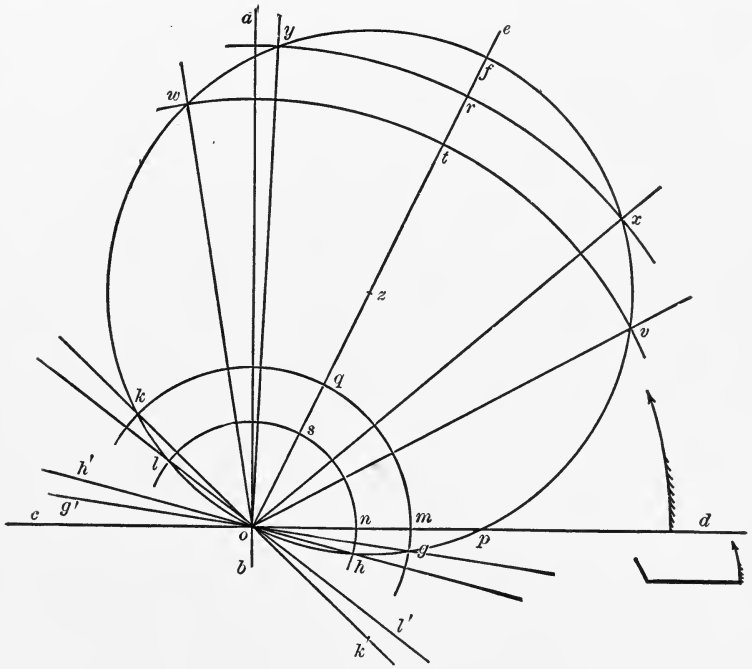

FIG. 11.

angular advance δ degrees, to determine the various points relating to the valve.

From the figure the lap $= \dfrac{a - d - 2e - 2c}{2}$ and the exhaust-lap $= \dfrac{2e + d - b}{2}$. To draw the diagram in Fig. 11

draw the two lines *ab* and *cd* at right angles to each other. Let *od* be one dead-point, the engine to turn in the direction of the arrow. Lay off the line *oe* so that the angle *aoe* is δ degrees. On *oe* lay off $of = r$ the eccentricity, and on *of* as a diameter draw the valve-circle. With *o* as a centre and *og* as a radius equal to the lap, draw the lap-circle *gqk*, and with a radius *oh* equal to the exhaust-lap draw the exhaust-lap circle *hsl*.

16. Distribution of Steam as shown from the Diagram.—When the crank is at *od*, the steam-port on, say, the right side is open the distance *mp* or the lead, while the exhaust-port on the opposite side, say left, is open *np* or the exhaust-lead. When the crank reaches *oe* both ports are opened widest, that on the right to steam and on the left to exhaust. When the crank reaches *ok* the steam-port on the right closes and cut-off takes place. When the crank reaches *ol* the exhaust closes on the left side of the piston and compression begins. When the crank reaches *oh'* (*oh* prolonged) the exhaust opens on the right side of the piston. At *og'* (*og* prolonged) the steam-port opens on the left. At *oc* the steam-port is open on the left a distance *pm*, and the exhaust is open on the right a distance *pn*. When the crank reaches *ok'* the steam is cut off on the left-hand side, at *ol'* the exhaust closes on the right-hand side. At *oh* the exhaust on the left opens again, and at *og* the steam is again admitted on the right-hand side.

17. Separate Diagram for each End of the Cylinder.—To make this clearer, the diagrams Figs. 12 and 13 are drawn, one of which shows the distribution of steam in the left-hand end of the cylinder, while the other shows the distribution in the right-hand end. The letters refer to the same things as in Fig. 11. The circles with *oa* as a radius are drawn to any convenient scale to represent the line travelled through by the crank-pin, and the lines *ab* represent the stroke of the piston to the same scale. *gk* and *g'k'* are the lap-circles, *hl* and *h'l'* are the exhaust-lap circles.

In the right-hand end of the cylinder, Fig. 12, starting at

the dead-point *a*, the steam-lead is *mp*, cut-off takes place at 2, exhaust opens at 3, and the port is open the distance *n'p'* or the exhaust-lead at the beginning of the return stroke; at 4 the exhaust closes, and at 1 the steam-port opens again so

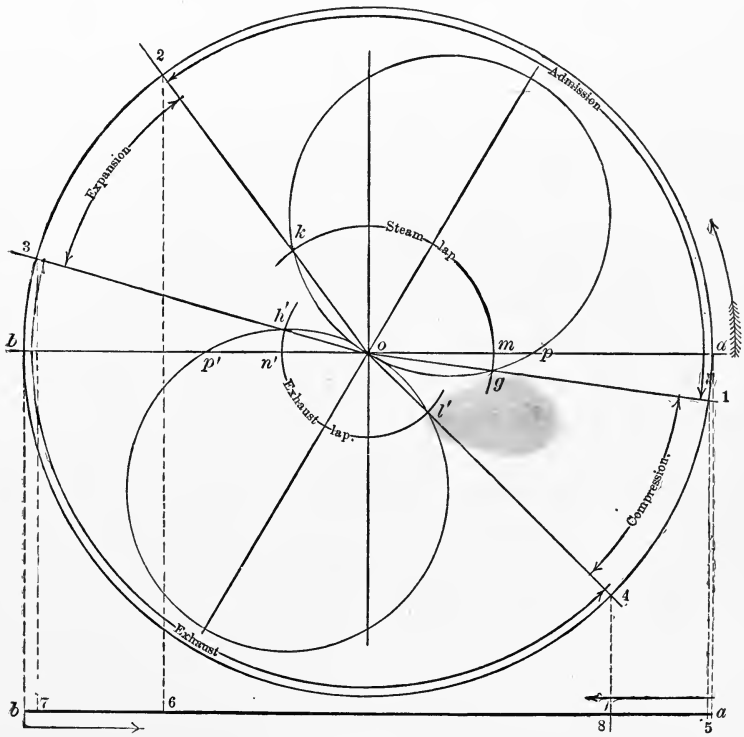

FIG. 12.

that when the crank again gets to *a* the port is open the lead.

On the lower line *ab*, representing the stroke of the piston, starting at *a*, steam is admitted until the piston reaches 6, when cut-off takes place; at 7 the exhaust opens, and the piston travels to the end of the stroke. On the return stroke, at 8 the exhaust-port is closed, at 5 the steam-port again opens, and the piston travels to the end of its stroke again. Steam is being admitted while the crank

travels from 1 to 2, it is being expanded from 2 to 3; exhaust is taking place from 3 to 4, and compression from 4 to 1.

While this is taking place in the right-hand end of the cylinder, the left-hand end is also receiving steam and exhausting, as shown in Fig. 13. Starting at the same dead-point *a*, the exhaust is open on the left a distance *np* equal

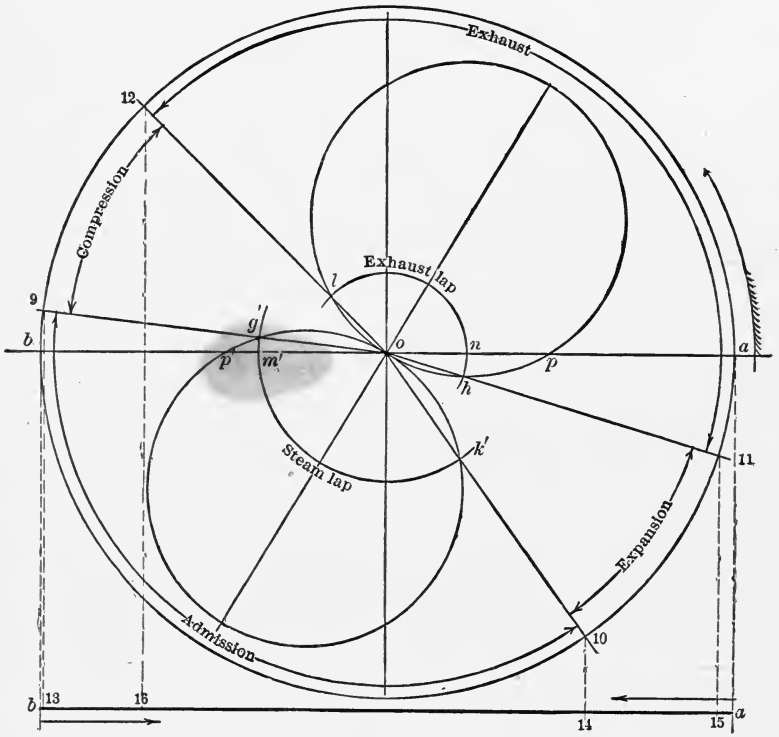

FIG. 13.

to the exhaust-lead; at 12 the exhaust closes, at 9 steam opens on the left, and at the dead-point *b* the port is open to steam a distance *m'p'* equal to the steam-lead. On the return stroke, at 10 steam is cut off, at 11 exhaust opens, and at *a* the dead-point is reached.

The line *ab* at the bottom of the figure shows the movement of the piston. Moving from *a*, at 16 exhaust closes, at

13 steam opens; on the return stroke, at 14 cut-off takes place, and at 15 exhaust opens. Exhaust takes place while the crank is moving from 11 to 12, compression from 12 to 9, admission from 9 to 10, and expansion from 10 to 11.

QUESTIONS.

14. Explain the method of drawing the Zeuner diagram.

15. How is the point of admission found?

16. What is the port-opening for any position of the crank?

17. What is angular advance, and why is it given?

18. What effect has angular advance on the valve-diagram?

19. What is lead?

20. What is meant by angle of lead?

21. What dimensions are required to determine the valve-diagram for a given engine?

22. Explain fully the different events occurring in one end of the cylinder, in the order of their occurrence, during one complete revolution.

23. Explain fully the events occurring in both ends of the cylinder, in the order of their occurrence, during one complete revolution.

24. How determine the actual position of the piston, the length of the connecting-rod being given, for each event occurring in one revolution in one end of the cylinder?

PROBLEMS.

4. Given the eccentricity 3 inches and the angle between the crank and the eccentric 90°, how far has the valve moved from its central position when $\omega = 30°$, 60°, 90°? Draw Zeuner diagram and scale distances.

5. In the above problem, if the lap is $1\frac{1}{2}$ inches, through what angle has the crank moved from its dead-point when the port opens? What when the port closes?

6. What is the port-opening when $\omega = 75°$, and what when $\omega = 150°$?

7. A given engine is 136 inches from centre of shaft to centre of exhaust-port. The valve is $9\frac{3}{4}$ inches over all, and $5\frac{11}{16}$ inside. The exhaust-port is 3 inches, the steam-ports each $1\frac{5}{8}$ inches, and the bridges $1\frac{3}{8}$ inches each, $r = 2\frac{1}{4}''$. The length of the connecting-rod is 90 inches, and the eccentric-rod 60 inches. The cylinder is 18 inches diameter by 24 inches stroke, and the angle of advance is 25°. Where in each stroke is steam admitted and cut off, and where does exhaust and compression in each end take place? Measure all distances for each end of the cylinder from that end of the stroke at which steam is admitted.

CHAPTER III.

OVERTRAVEL AND PROBLEMS.

18. Overtravel.—The travel of the valve is often more than sufficient to open the port wide. The excess is called overtravel. Thus in Fig. 11, the distance *qr* is the width of the port, and the port is wide open to steam while the crank passes from *ox* to *oy*, and the distance *rf* is the overtravel.

Similarly *st* is the width of the port, and the port is wide open to exhaust from *ov* to *ow*. That is, on the right side the port begins to open at *og*, is wide open at *ox*, begins to close at *oy*, and is entirely closed at *ok*.

In the same way the exhaust on the left-hand side begins to open at *oh*, is wide open at *ov*, begins to close at *ow*, and is entirely closed at *ol*. Without overtravel the valve was opening the port from *og* to *oe*; with overtravel the port is opening while the crank passes from *og* to *ox*. Overtravel therefore causes the port to be opened and closed more quickly, but for the same opening of the port the eccentricity must be greater by the amount of overtravel.

The following are the ordinary problems that occur in designing valves.

19. Problem 1.—Given the eccentricity r, the angle of advance δ, the point of cut-off, and the point of closing of the exhaust, to find the lap, exhaust-lap, lead and exhaust-lead, and the greatest possible opening of the port.

In Fig. 14 draw *ao* and *do* at right angles to each other. Lay off $aoe = \delta$, the angular advance. On *oe*, with a radius equal to one half the eccentricity $\left(\frac{r}{2}\right)$, draw the valve-circle.

Draw *ok* to represent the position of the crank at cut-off, and *ol* for the closing of the exhaust. Through the intersection of these lines with the valve-circle, and with *o* as a centre, draw *lsh* and *kqg*. Then *ol* is the exhaust-lap, *ok* the

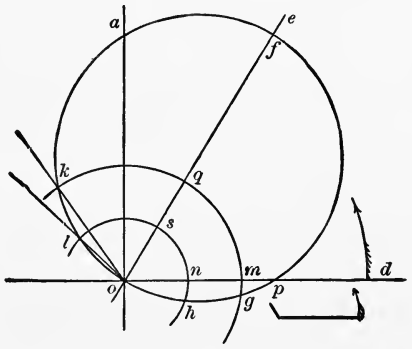

FIG. 14.

lap, *mp* the lead, *np* the exhaust-lead. *qf* is the greatest possible opening of the port to steam, and *sf* to exhaust.

20. Problem 2.—Given the lap, exhaust-lap, point of cut-off, and the steam-lead, to determine the eccentricity and angle of advance.

In Fig. 15 draw *od* and *oa* at right angles to each other.

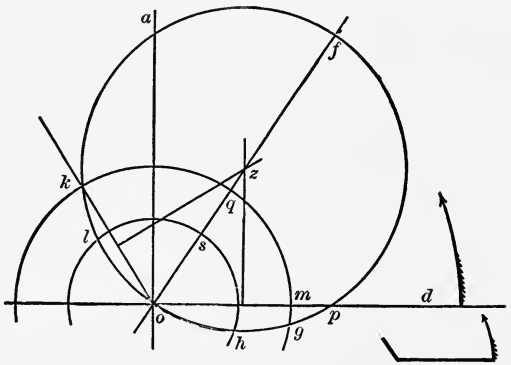

FIG. 15.

With *o* as a centre and the lap as a radius, draw the lap-circle *kqg*. Draw *ok* as the crank position for the point of

cut-off. Lay off *mp* equal to the steam-lead. The problem then becomes, to pass a circle through *k*, *o*, and *p*. Bisect *ok* and *op* by perpendiculars meeting at *z*. *z* is then the centre of the valve-circle. Draw *oz* and the valve-circle. *aof* is the angle of advance, and *of* is the eccentricity.

21. Problem 3.—Given the cut-off, angle of lead, width of port, and the overtravel, to determine eccentricity, lap, lead, and angular advance.

In Fig. 16 draw *oa* and *od* at right angles. Lay off *ok*

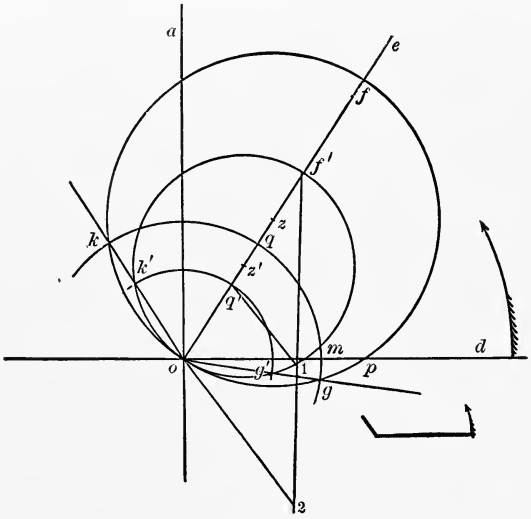

FIG. 16.

for the point of cut-off and *og* for the angle of lead. As the valve-circle must cut the lap circle on these lines, the centre of the valve-circle must lie on a line *oe* which bisects the angle *kog*. After drawing this line, take any point, as *z'*, for the centre of the trial valve-circle. Draw the circle *og'f'k'*. Draw the corresponding lap-circle *k'q'g'*. Then if our trial valve-circle is the same as the actual one, *q'f'* should equal the width of the port plus the overtravel.

Suppose *q'f'* is less than the width of the port plus the overtravel. Draw *any* line through *f'*, as *f'*1, equal to the

width of the port plus the overtravel. Join $1q'$, and through o draw $o2$ parallel to $q'1$; then $f'2$ is the actual eccentricity. Lay off of equal to $f'2$. Bisect of at z, and draw the valve-circle $kfpo$. Through k draw the circle kqm. Then of is the eccentricity, ok is the lap, mp is the lead, and foa is the angle of advance.

22. Problem 4.—Given the point of cut-off, lead, and port-opening, to determine the angular advance, lap, and eccentricity.

Draw oa and od at right angles to each other, Fig. 17,

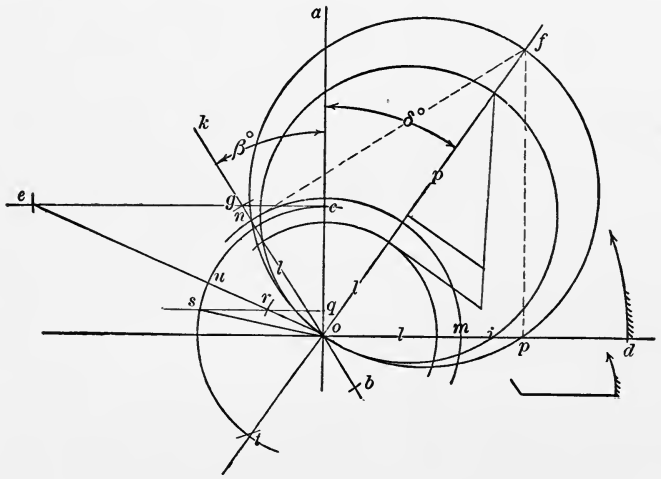

FIG. 17.

and ok to represent the point of cut-off. Lay off ob below o on the line ok equal to the lead, and bg equal to the port-opening. Draw gc parallel to od, and make ge equal to the port-opening. Join oe. Make $or = ob$, and draw qr parallel to od. Draw the circle $cust$, with oc as a radius. Lay off $st = cu$, and draw tof. Then aof is the angular advance. To find the diameter of the valve-circle, etc., proceed as in the last problem. (See solution of same problem as given in Fig. 100.)

To prove our construction:

From the figure, onf and ofp are right-angled triangles. Calling the angle $aok = \beta$, and the lead equal to i, we have

$$(l+p)\cos(\delta+\beta)=l$$

and

$$(l+p)\sin\delta=l+i.$$

Taking the value of l from the first equation and putting it in the second, and reducing, we have

$$\{(i-p)\cos\beta\}\cos\delta+\{p-(i-p)\sin\beta\}\sin\delta=i.$$

Using an auxiliary angle ϕ such that

$$\tan\phi=\frac{p-(i-p)\sin\beta}{(i-p)\cos\beta}=\frac{p+(p-i)\sin\beta}{(i-p)\cos\beta},$$

we have

$$\cos\delta+\tan\phi\sin\delta=\frac{i}{(i-p)\cos\beta}=\frac{-i}{(p-i)\cos\beta},$$

$$\cos\delta\cos\phi+\sin\delta\sin\phi=\frac{-i\cos\phi}{(p-i)\cos\beta},$$

$$\cos(\delta-\phi)=\frac{-i\cos\phi}{(p-i)\cos\beta},$$

$$\delta=\phi+\cos^{-1}\frac{-i\cos\phi}{(p-i)\cos\beta}.$$

Now in our construction

$$gc=(p-i)\sin\beta \quad \text{and} \quad ec=p+(p-i)\sin\beta,$$

$$co=(p-i)\cos\beta, \quad \text{and} \quad \tan\phi=\frac{ec}{-oc}, \quad \text{or}$$

$$\phi=180-eoc,$$

$$\cos^{-1}\frac{-i\cos\phi}{(p-i)\cos\beta}=-cos, \quad \text{or}$$

$$\delta=180-eoc-cos=aof,$$

as by construction.

23. When the Piston and Eccentric-Rods do not travel on Parallel Lines.—The simplest method of connecting up a valve has heretofore been used. Suppose now that the

connection is as shown in Fig. 18. In this figure the valve-face is not parallel to the direction of the stroke of the piston, and, secondly, the valve is driven through a lever which is pivoted at a fixed point *a*. If the arms *ac* and *ab* are unequal, the eccentricity is no longer equal to the distance travelled by the valve on either side of its middle position. The eccentricity or actual throw of the eccentric should not be that deduced from the diagram, but should be $\frac{ab}{ac} \times r$, as

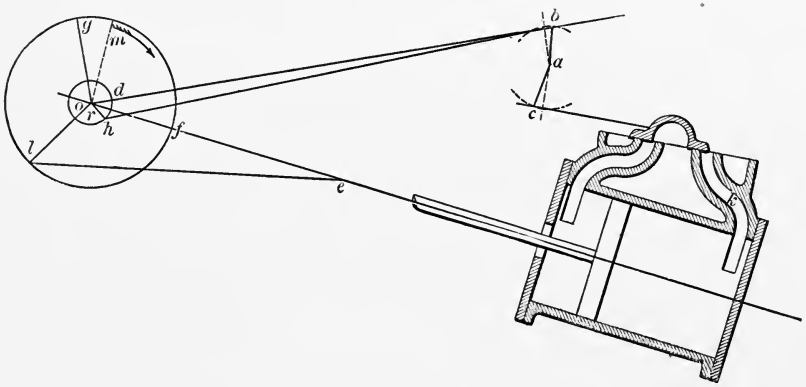

FIG. 18

this value would cause the valve to move a distance equal to *r*.

The chord of the arc through which *c* travels should be parallel to the valve-face. The chord of the arc through which *b* travels should be so arranged that a line parallel to the chord and above it a distance equal to $\frac{1}{2}$ the versed sine of $\frac{1}{2}$ the arc should pass through the centre of the shaft.

24. To determine the Position of Eccentric.—To determine the position of the eccentric, suppose *oe* to be the line of travel of the piston. Draw the line *db* as the line of travel of the end of the eccentric-rod *hb*. From the figure the valve will be in mid position when the eccentric is at *og*, or directly opposite. If the crank is on the dead-point *of*, and it is desired that the engine turn in the direction of the

arrow, the eccentric should be so set that its motion would continue to open the port on the right as the crank leaves the dead-point.

That is, the valve must move towards the left, *c* must move to the left, *b* must move to the right, and therefore the eccentric must be on the line *og* above the shaft, as it is only in this position that the motion of the crank in the direction of the arrow would tend to open the port.

Lay off the angle *gom* equal to the angular advance in the direction in which the engine is to turn. Then the angle *mof* is the angle between the crank and the eccentric for the engine to turn in the direction of the arrow.

Therefore, to find the proper position of the eccentric with respect to the crank, put the engine on one dead-centre and set the eccentric so that the valve is in its middle position. If direct connected set it ahead of the crank, and if through a reverse lever set it behind the crank. Then move the eccentric through an angle equal to the angular advance in the direction in which the engine is to turn, and secure it in place.

25. Effect of changing Dimensions.—An examination of Fig. 11 will show how a modification of any part of the valve or its connections will affect the distribution of the steam.

If the eccentricity is increased, steam is admitted earlier and cut-off later, the lead and the overtravel are increased.

An increase in the angular advance increases the lead, makes admission and cut-off earlier, and a decrease in angular advance has the opposite effect.

Increasing the lap lessens the lead, makes admission later and cut-off earlier.

QUESTIONS.

25. What is overtravel, and what effect has it on the distribution of steam?

26. How determine the lap and lead when r, δ, and the point of cut-off are given?

27. How determine r and δ when the lap, lead, and the point of cut-off are given?

28. How determine the lap, lead, and angular advance when the cut-off, angle of lead, and port-opening are given?

29. How determine the angular advance, lap, and eccentricity when the point of cut-off, lead, and port-opening are given?

30. How determine the angle between the crank and eccentric when the piston and valve do not travel in parallel lines?

31. What effect on distribution of steam has an increase in angular advance? A decrease?

32. What effect on the distribution of steam has a shortened valve-stem?

33. What effect has a lengthened eccentric-rod?

34. What must be done in a given engine to increase the lead?

35. How in a given engine could you increase the lead on one end and at the same time decrease it in the other?

PROBLEMS.

8. Given lap $\frac{7}{8}$ inch, width of port $1\frac{5}{8}$ inches, eccentricity $2\frac{3}{4}$ inches, lead $\frac{1}{16}$ inch, through what angle is the crank moving while the port is opening? Had the eccentricity been $2\frac{1}{2}$ inches, through what angle would the crank move?

9. Given steam-lead $\frac{1}{4}$ inch, cut-off .8 stroke, port-opening $1\frac{1}{4}$ inches, to determine the angular advance, lap, and eccentricity.

10. Given lap $\frac{7}{8}$ inch, lead $\frac{1}{4}$ inch, and cut-off at .8 stroke, to determine the eccentricity and angular advance.

11. How much must the angular advance be increased to make the lead $\frac{3}{8}$ inch?

12. How much must the eccentricity be increased to make the lead $\frac{3}{8}$ inch?

13. How much must the lap be changed to make the lead $\frac{3}{8}$ inch?

14. Given the eccentricity $2\frac{3}{8}$ inches, $\delta = 30°$, and cut-off .70 stroke, required the lap and lead.

15. Given the cut-off at .8 stroke, angle of lead 8°, and the port-opening $1\frac{1}{2}$ inches, required the lap, lead, and angular advance.

16. Given $r = 2\frac{3}{8}$ inches, lap $= \frac{7}{8}$ inch, stroke 24 inches, connecting-rod 60 inches. Cut-off takes place in stroke towards the shaft at 20 inches: at what point does it take place in the return stroke? How far has the piston yet to travel in each stroke when the port opens to steam?

17. Given steam-ports $1\frac{5}{8}$ inches, outside lap $\frac{7}{8}$ inch, eccentric-rod 56 inches, $\delta = 25°$, $r = 2\frac{1}{2}''$, reverse-shaft arms $10\frac{1}{2}$ to eccentric-rod and $11\frac{3}{4}$ to valve-stem, which is above the piston-rod. Centre of reverse-shaft $7''$ above centre line of engine; piston travel and valve-face are parallel. What is the angle between the eccentric and crank for running in each direction?

CHAPTER IV.

MODIFICATIONS OF THE PLAIN SLIDE-VALVE.

26. Double-ported Valves.—It sometimes happens that the steam-port necessary to give sufficient opening must be very wide. The eccentricity must be correspondingly large to cause the valve to open the port fully. In such cases the valve is often made double-ported, as shown in Fig. 19. In

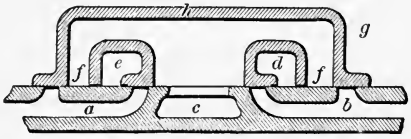

FIG. 19.

this figure each steam-passage *a* and *b* has two steam-ports opening into it. The steam is not only around the outside of the valve, but also fills the passages *d* and *e*, which extend entirely through the valve.

As the valve moves to the right steam passes through both ports into the steam-passage *a*, while on the left steam passes out of both ports into the space under the valve, and thence to the exhaust. In designing a valve of this kind the problem is exactly the same as for a single valve, the only care that must be taken for the double-ported valve being to see that the opening *e* never passes over the left-hand port to the passage *a*, and that the opening *f* never passes over the right-hand opening into the same passage.

27. Allen or Trick Valve.—We have so far been dealing with valves made in the same shape as that shown in Figs. 1 and 10, but this form is modified in numerous ways to fit the varying circumstances under which it is to be used.

The modification used on many locomotives, and known as the Allen or Trick valve, is shown in Fig. 20. *a* and *b* are the steam-passages, and *c* the exhaust-passage in the cylinder casting. The valve is a single casting *dd*, having a passage *e* cast in it.

As the valve moves to the right, when the point *f* of the valve passes over the edge *g* steam passes under the right-hand edge of the valve through the passage *e* into the steam-

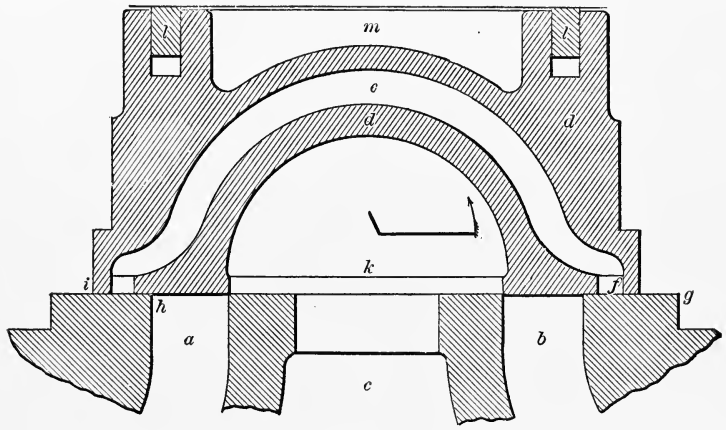

FIG. 20.

passage *a*, while at the same time steam passes by the end *i* of the valve which has moved past the edge *h* of the port *a*, allowing steam to enter through double the area for the same movement that could be obtained with the ordinary valve. Exhaust takes place under the valve through the space *k*, as in the plain slide.

When high-pressure steam is used the unbalanced pressure on the back of the valve is considerable, causing excessive wear, thus tending to make the valve leak, and requiring considerable power to move it. To reduce this as much as possible some method of balancing is resorted to, and in the valve just described strips *l*, *l* on the back of the valve bear against the cover of the chest and prevent the steam from

passing into the space *m*, thus relieving the valve of the pressure over that area.

28. Piston-Valves.—Piston-valves are used for the same purpose, a modern example being shown in Fig. 21, which is a sketch of the valve used on the Armington & Sims Engine.

a and *b* are the passages leading into the cylinder, continuations of which extend entirely around the valve. *g*,*g* are bushings which form the valve-seat, which are cylindrical,

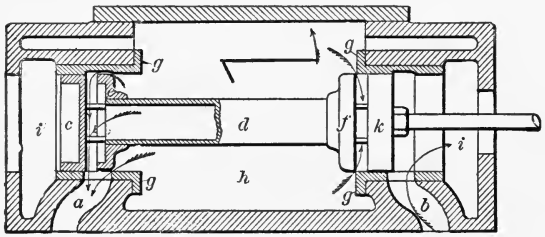

FIG. 21.

and have the proper openings into the passages leading to the cylinder. The valve itself consists of two flat flanged plates *c* and *k*, held at their proper distance apart by the hollow cylinder *d*, which also carries two discs, *e* and *f*, forming passages next the plates *c* and *k*. Steam fills the space *h* inside the valve, and the exhaust takes place at each end of the valve at *i*, *i*.

As the valve moves towards the left, steam passes, as shown by the arrow, from the space *h*, directly into the left-hand port, and also into the passage between *f* and *k* on the right, through the hollow stem *d* into the passage between *c* and *e*, and thence into the port also, thus making the valve a double-ported one. The exhaust passes through the passage *b* into the space *i* at the end of the valve, and into the exhaust-pipe.

29. Taking Steam Inside.—In this valve, as in many others, steam is taken inside instead of outside; but the steam-lap here, as in the case of the plain slide, is the distance the

valve must move from its middle position to admit steam. In this case also the valve must move in the opposite direction to that in which it would if it were a plain slide. The small figure would therefore show the method of connecting the eccentric and crank for motion in the direction of the arrow, the eccentric being directly connected to the valve.

30. Two or More Valves.—To separate the steam and the exhaust passages so that the steam entering the cylinder shall not come in contact with a valve partly cooled by the exhaust, and oftentimes to get a better distribution of steam

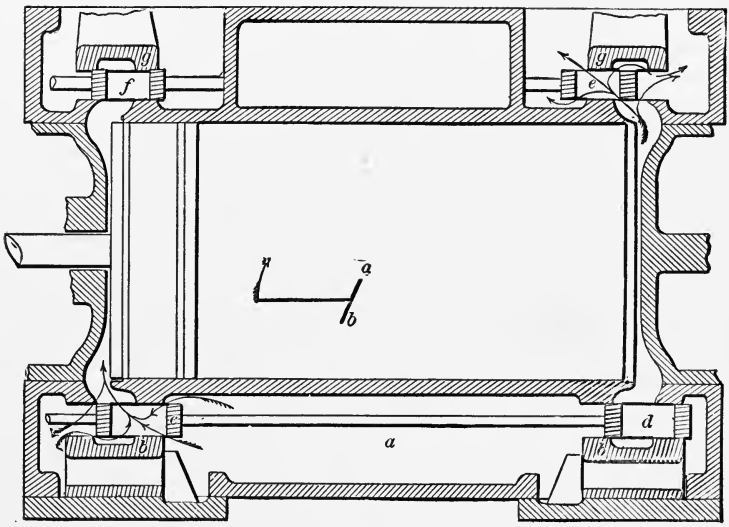

FIG. 22.

and exhaust, two valves or more are used. These valves are usually balanced by making them flat plates, and allowing them to move in a space just large enough to allow of free movement without steam leakage, or by fitting pressure-plates on the back of the valve, the position of which can be adjusted.

Fig. 22 shows the four valves of a Porter Allen Engine, the exhaust-valves of which are connected to the same stem, while the steam-valves are usually connected to different

stems driven from the same eccentric, but in such a way that each valve is moving its fastest when opening and closing its port.

In Fig. 22 steam fills the space *a* and extends around the pressure-plates *bb*. The steam-valves are shown at *c* and *d*, and consist of flat plates having rectangular openings through them. At *e* and *f* are the exhaust-valves, which are kept on their seats by the pressure-plates *gg*. Steam passing from *a* into the left-hand end of the cylinder, and from the right-hand end through the exhaust-valve *e*, is shown by the arrows.

If these valves were connected directly to eccentrics in the small figure, the steam-valve would be connected to *a* as it moves to the right to admit steam on the left and is therefore directly connected. The exhaust-valve should be connected at *b*, as this valve moves to the left to exhaust on its right and it must be, therefore, indirectly connected. Both might be connected at *a*, and a reverse lever used to drive the exhaust-valves, as shown in Fig. 18. The actual method of driving these valves is shown in Fig. 53.

QUESTIONS.

36. Make a sketch of a section of a double-ported slide-valve. Why are double ports used?

37. Sketch an Allen valve. What are its supposed advantages?

38. Why are piston-valves used? Sketch a piston-valve which would act as a plain slide.

39. How does the valve of the Armington & Sims engine work?

40. How draw the Zeuner diagram for a double-ported valve?

41. What change is necessary in the setting of an eccentric if steam is taken inside?

42. Give a definition of steam-lap which would cover all valves which are a modification of the plain slide.

43. Why are separate valves used for steam and exhaust?

44. In what shape are flat valves made, and how are they kept steam-tight?

45. Describe the valves of the Porter-Allen engine.

PROBLEMS.

18. Given the maximum port-opening to be 4 inches, double ports to be used, cut-off at .85 stroke, lap $1\frac{1}{8}$ inches, bridges $1\frac{1}{4}$ inches, exhaust-port 7 inches, exhaust closes at .9 return stroke. Make a sketch of a section of the valve, giving all the dimensions on the face and seat of the valve.

19. In a single-ported piston-valve taking steam inside, $r = 2\frac{3}{8}$ inches, $\delta = 30°$, lap $= \frac{7}{8}$ inch, exhaust-lap $\frac{3}{8}''$, steam-port $1\frac{1}{8}$ inches, bridge 1 inch, exhaust-port 3 inches, make a sketch showing the valve in the position it would occupy when $\omega = 30°$.

20. One of the exhaust-valves of a four-valve engine is $3\frac{3}{4}$ inches outside and $2\frac{1}{4}$ inches inside. The exhaust-port is $1\frac{1}{2}$ inches and the exhaust-lap $\frac{1}{2}''$. If this valve is driven by an eccentric having $r = 1\frac{1}{2}$ inches, and set with 30° angular advance, what is the crank position for opening and closing the port to exhaust? What is the angle between the crank and the eccentric? How prevent steam escaping as the valve moves the other way?

21. One steam-valve of a four-valve engine moves over a port $1\frac{3}{4}$ inches wide. The walls of the valve are $\frac{1}{2}$ inch thick, and the cut-off is to take place at $\frac{3}{4}$ stroke, with $\frac{1}{2}''$ lap. If $r = 1\frac{3}{4}$ inches, make a sketch of the valve when $\omega = 120°$, and indicate the direction of its motion.

CHAPTER V.

EQUALIZING CUT-OFF, LEAD, COMPRESSION, AND RELEASE.

31. Equalizing Cut-off.—Our diagram gives only the crank position corresponding to the points of cut-off, admission, etc. If the corresponding position of the piston is laid down as shown in Fig. 6, it will be found that steam is admitted for a longer time in the end of the cylinder away from the crank, than in the end towards it, the difference being due to the angularity of the connecting-rod. One way by which this can be overcome is by varying the lap on the two ends of the valve. Thus in Fig. 23 the piston, connecting-rod, and crank are

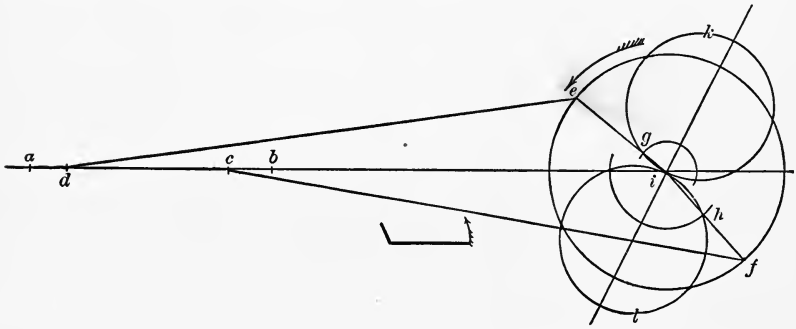

FIG. 23.

shown, and the crank positions *ie* and *if* for cutting off in both ends of the cylinder at the same point in the stroke are laid off.

That is, the engine turns in the direction of the arrow, and the distance $ac = bd$. Lay off the valve-circles as shown at *igk* and *ilh*. The point *g* in which the line *ie* cuts the upper valve-circle gives *ig* for the lap on the right side of the valve.

The point *h*, when the line *fi* cuts the lower valve-circle, gives us *hi* for the lap on the left-hand side of the valve.

It must be remembered that while we have made the cut-off equal in the two ends, we have made the points of admission different in the two ends of the cylinder and the leads unequal. In exactly the same way, by making the exhaust-lap unequal on the two ends either the compression or release can be made the same for both strokes.

32. **Equalizing Cut-off and Lead.**—As equal cut-off means unequal lead in an engine as ordinarily connected, the converse is equally true, that if a simple slide-valve is set to give equal lead on both ends of the cylinder, the cut-off will be different in the two ends of the cylinder, and any change we may make in the valve or in the eccentric will not remedy it.

It is possible, however, in many cases to make both the cut-offs equal, and the leads practically so, by modifying the connection between the eccentric and valve. The leads may be slightly unequal, but the angles of lead or the distance the piston has to travel can be made exactly equal. Fig. 24 shows how this may be done.

Determine from the valve-diagram the angular advance, eccentricity, lap, etc., to give the required cut-off on one end. Adding 90° to the angular advance will give the angle between the crank and eccentricity. In Fig. 24, with *c* as a centre, and a radius equal to the half-travel of the piston or the throw of the crank, draw the circle *drfek*. Make *ra* equal to the length of the connecting-rod and *ab* the stroke. Let *g* be the point of cut-off as the piston travels from *a* to *b*, and *h* the point of cut-off on the return stroke. With *g* and *h* as centres, mark the position *f* and *k* of the crank at the points of cut-off. Let *cd* and *ce* represent the crank position for the opening of the port. Lay off from *cd*, *cf*, *ce*, and *ck* an angle equal to that between the crank and the eccentric in the direction in which the engine is to run, giving the points *d'*, *f'*, *e'*, and *k'* on a circle whose radius is the eccentricity.

Evidently when the one end of the eccentric-rod is at d' or f' the valve must be at the same point, for when the eccentric is at d' the port is opening to steam on the right, and at f' it is closing to steam on the right. Similarly, if one end of the eccentric-rod is at e', the other end must be at the same point as when the eccentric end of the rod is at k'.

Taking the length of the eccentric-rod as a radius, draw arcs with d' and f', and e' and k' as centres, and call the points of intersection l and m. Bisecting the line ml by the perpendicular np, and taking any point p in this line and

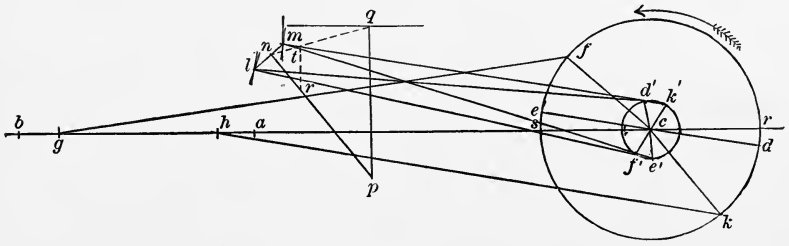

FIG. 24.

drawing a line pq at right angles to cb, gives us an angle qpn. If we make a bell-crank lever with this angle between the arms, and connect the arm q to the valve and n to the eccentric-rod, the arms of the lever being of such a length that the valve moves the proper distance, the cut-off and lead on one end will be exactly equal to that on the other.

To determine the point p, lay off nr equal to nm and draw rt equal to the lap and at right angles to the direction of movement of the valve-stem. Through n and t draw nq, and at q, where this line cuts the line of movement of the valve-stem, draw pq at right angles to that line or parallel to rt. Then p will be the desired point, as $pq : np :: rt : nr$ or as lm : 2 times the lap. Care should be taken that the eccentric-rod and bell-crank arm do not come too nearly in one straight line.

33. Equalizing Exhaust and Compression.—In exactly the same way, by marking the position of the eccentric for

exhaust and compression on both ends, points similar to *l* and *m* in Fig. 24 can be obtained, and the exhaust and compression on both ends made alike. If these points should fall in such a position that the same arc would pass through them, and also the points *l* and *m*, it would be possible to design a motion that would give equal cut-off, lead, exhaust, and compression. Ordinarily this is not possible, and the radius *pl* should be so taken that the arc passes through the points *l* and *m*, and as near as may be to the points found for equalizing compression and exhaust, the point *p* being above or below the line *lm*, depending on the position of these points.

34. Circular Diagram for determining Movement of Piston.—A rather more convenient method of laying down the piston position for some cases is shown in Fig. 25. Suppose *a* to be the centre of the shaft, *ab* the crank on one dead-point, and *bc* the connecting-rod. With *a* as a centre draw a circle with *ac* as a radius, and with *b* as a centre draw a second circle with *bc* as a radius. Suppose that the

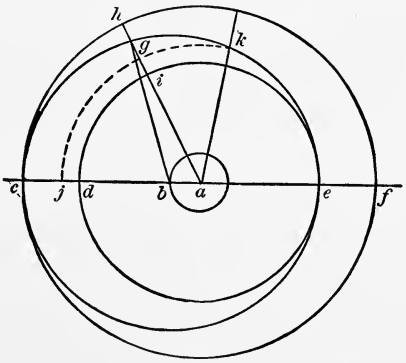

FIG. 25.

crank remains fixed at *ab*, and the connecting-rod turns about *b*. When the end of the connecting-rod reaches any point as *g*, the angle between the crank and a line to the end of the connecting-rod is *gac*.

The distance *gh* is the amount the end of the connecting-

rod has moved towards the centre of the shaft when the angle between the crank and piston line is *gac*. Now draw another circle with a radius *ad*, less than *ac* by the stroke: then when the angle between the crank and piston travel is *cag*, the piston is *hg* from one end of its stroke and *gi* from the other. To find the position of the piston for any position of the crank, draw the line *ah* for the position of the crank: then *hg* is the distance from one end and *gi* from the other end of the stroke.

If the position of the piston is given, the crank position can be found as follows: Taking *cd* as the stroke, take the point *j* as the position of the piston for which the crank position is required. Draw an arc with *a* as a centre and *aj* as a radius, until it cuts the circle having the point *b* as a centre in the point *k*. *ak* is the crank position desired.

QUESTIONS.

46. On which end of the cylinder must the lap be the greater for equal cut-offs?

47. If a plain slide-valve is directly connected to an eccentric, and is set for equal lead, on which end is the cut-off the shorter?

48. A double-ported piston-valve, taking steam inside, is driven directly from the eccentric. On which stroke will the cut-off be greater if the valve is set with equal lead?

49. What effect has a rock-shaft on the equality of cut-off if a valve is set with equal lead?

50. How equalize the cut-off by varying the lap?

51. Could the cut-off be equalized by moving the valve on its stem? If so, by how much?

52. Can the cut-off and lead be always equalized? If so, how?

53. Explain the method of determining an equalizing rock-shaft.

54. Is it possible to equalize the lead, cut-off, and the opening and closing of the exhaust?

55. How can a circular diagram be drawn to represent the movement of the piston?

PROBLEMS.

22. Given $r = 2\frac{3}{8}$ inches, ports $1\frac{1}{4}''$, bridges $1\frac{1}{4}''$, exhaust-port $3\frac{1}{2}''$, $\delta = 30°$, stroke 18 inches, connecting-rod 45 inches. What must be the lap to cut-off at 14 inches on each stroke? If the exhaust is to close at 16 inches, what must be the exhaust-lap on each stroke? Sketch the valve in its central position.

23. Given steam-port $1\frac{3}{8}$ inches, $r = 2\frac{1}{2}$ inches, cut-off in each end to be at .8 stroke, stroke 22 inches, connecting-rod 86 inches, and eccentric-rod 65 inches, the distance from the centre of the piston-rod to the centre of the valve-stem being 18 inches. Required the position of the centre, angle between the arms and length of the arms of an equalizing lever, to make the cut-off and angles of lead equal.

24. In a certain engine the ports are $1\frac{5}{8}$ inches and the steam-lap $\frac{7}{8}$ inch, lead $\frac{3}{8}$ inch, exhaust-lap 0. The stroke is 24 inches and the connecting-rod 90 inches. The valve is set for equal lead. How much must it be moved on its stem to equalize cut-off? Where is the piston when the port opens and closes to exhaust and steam in both ends of the cylinder?

CHAPTER VI.

DESIGNING AND SETTING VALVES.

35. Designing a Plain Slide-Valve.—In designing the valve and connections for an engine, certain data are fixed by the details of the engine itself. Thus the distance from the centre of the shaft to the centre of the ports is fixed. The size of the ports depends on the diameter of the cylinder and the number of revolutions per minute, as steam should not be made to travel faster than 6000 to 8000 feet per minute through the steam-port, or than 4500 to 5000 feet per minute through the exhaust-port.

A good rule is to multiply the area of the piston in square feet by the stroke in feet, and by the number of strokes per minute, and divide by 6000 for the area of the steam-port in square feet.

The thickness of the bridges between the steam and exhaust passages is determined principally by the thickness of the cylinder walls and other adjacent parts of the casting, and is generally about the same thickness as the cylinder. A good empirical rule is to make the bridges $.4'' + .5$ the width of the steam-port in inches.

To retain always an opening under the valve equal to the area of the steam-port, the width of the exhaust-port should be at least

$$r + .5 \text{ steam-port} + \text{exhaust-lap} - .4 \text{ inches.}$$

The amount of lead to be given to a valve is entirely a matter of experience, and must be assumed. In locomotives it varies from 0 to $\frac{1}{2}$ inch, being about $\frac{3}{8}$ inch when the valve has its least travel, and from 0 to $\frac{3}{16}$ when it has its greatest travel. In marine engines the lead varies from 0 to $1\frac{1}{2}$

inches. The angle of lead in stationary engines is from 0° to 8°, and in marine engines should be not over 10°.

The outside lap varies from $\frac{1}{2}$ to $1\frac{1}{4}$ inches in locomotives and 1 to $3\frac{1}{2}$ inches in marine engines, while the inside lap varies from 0 to $\frac{1}{4}$ inch in locomotives, and 0 to $1\frac{1}{2}$ inches in marine engines.

The eccentricity varies in locomotives from 2 to 3 inches, while in marine engines 5 to $6\frac{1}{2}$ inches is about the average

Assuming data for a particular case as follows, required all the dimensions of the valve and gear:

Stroke of piston; length of connecting-rod; point of cut-off on each stroke; width of steam-port; width of exhaust-port; steam-lead; distance from centre of piston-rod to centre of valve-stem; distance from centre of shaft to centre of exhaust-port; point of exhaust closure on both ends; thickness of bridges on valve-seat; ports to be on top of cylinder, and to be connected through an ordinary, or an equalizing, reverse-lever.

36. To determine Approximate Solution.—In Fig. 26 draw *ab* and *cd* at right angles through *o*. With *o* as a centre, with any convenient radius draw *ehf* to represent the crank-pin travel, and lay off *fg* to represent the position of the piston at cut-off. Draw *gh* at right angles to *ab*, and draw *oh* to represent the position of the crank at cut-off. Continue this line to *i* so that *oi* equals the lead. Make *ij* equal to the maximum opening of the port. Draw *jk* parallel to *ob* and equal to the port-opening, and join *ok*. Make *o*4 = the lead = *oi*, and draw 4—5 parallel to *ob* until it cuts the arc drawn with *o*8 as a radius. Lay off the arc 8—6 from 5 to 7, and draw *o*7 and produce it to *l*. Then *col* is the angular advance.

Take any point as *s* as a centre, and draw the trial valve-circle cutting *ol* in *m*. With *o* as a centre, draw the trial lap-circle. Measure *pm*. As it should be equal to the port-opening, draw any line *mq* through *m* equal to the port-opening. Join *p* and *q*, and draw *or* through *o* parallel to *pq*. *mr* is the eccentricity. With half *mr* as a radius, describe

the valve-circle *ynx*. Draw the lap-circle *yx*. Then *zob* is the angle of lead, *ox* is the lap, *on* is the eccentricity, and *con* the angle of advance which we will use. (The method shown in Fig. 100 can be used to find these quantities.)

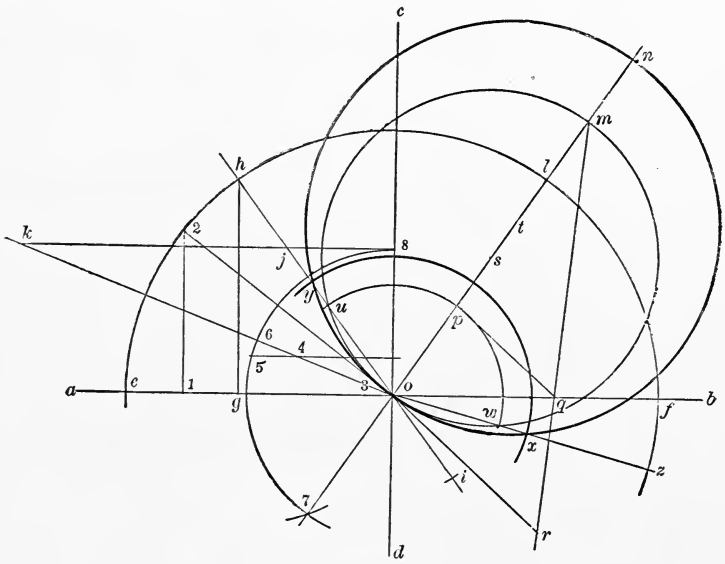

FIG. 26.

Find *o*2 the point of closing of the exhaust, and *o*3 is the exhaust-lap. A section can now be drawn through the valve and ports as shown in Fig. 27. From the data of the engine

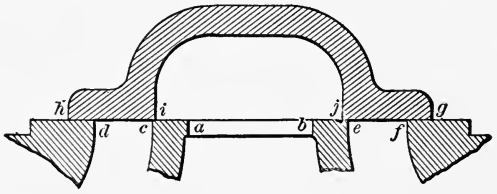

FIG. 27.

we have *ab*, *be* and *ac*, and *ef* and *dc*. Make *fg* and *dh* the steam-lap, and *ej* and *ci* the exhaust-lap. The rest of the valve can then be drawn in, taking care that the exhaust-steam in passing under the valve into the exhaust-port has fully as much area to pass through as in the passages.

The length of the valve over all is df + twice the steam-lap. The valve-chest must be at least long enough to allow the valve to move from its middle position a distance equal to the eccentricity in either direction. The length of the chest inside must be greater than df + twice the lap + twice the eccentricity. The valve-stem must project through one side of the chest when the valve is at its farthest distance from that side, and the length of the stem can be determined. The distance from the centre of the shaft to the centre of the exhaust-port less the length of the valve-stem can be taken as the length of the eccentric-rod. A reverse-lever of equal length on each arm, and supported midway between the centre of the piston and the centre of the valve-stem, would give the proper reversal.

If a valve is connected up as just determined, the eccentric-rod taking hold of the valve-stem through the reverse-lever, the conditions of the problem would be approximately solved, and ordinarily this would be sufficient; but if exactly equal cut-off and lead on each end is required, the following is the method of proceeding:

37. Equalizing Lever.—The more nearly the figure is drawn full size, the more nearly accurate the dimensions will be, as many of the circles intersect at very acute angles, allowing considerable error if drawn to small scale.

Draw the circle *ecb*, Fig. 28, with radius equal to the throw of the crank, and $a'c'd'$ with radius equal to the eccentricity. Make *bg* the length of the connecting-rod, and gh = the stroke. Lay off the angles *aob* and *eod* = the angle of lead from Fig. 26, and make *gj* and *hi* equal to the piston travel to the point of cut-off. From *j* and *i*, with the length of the connecting-rod as a radius, mark the points *c* and *f*, and draw the lines *oc* and *of*. Lay off points on the eccentric-circle so that aoa', fof', coc', and dod' are equal to 90° minus the angular advance, as a reverse-lever is to be used, and are laid off behind the crank. With a' and c' as centres, and radius equal to the length of the eccentric-rod, draw two arcs intersecting at *l*. Similarly, from f' and d' as

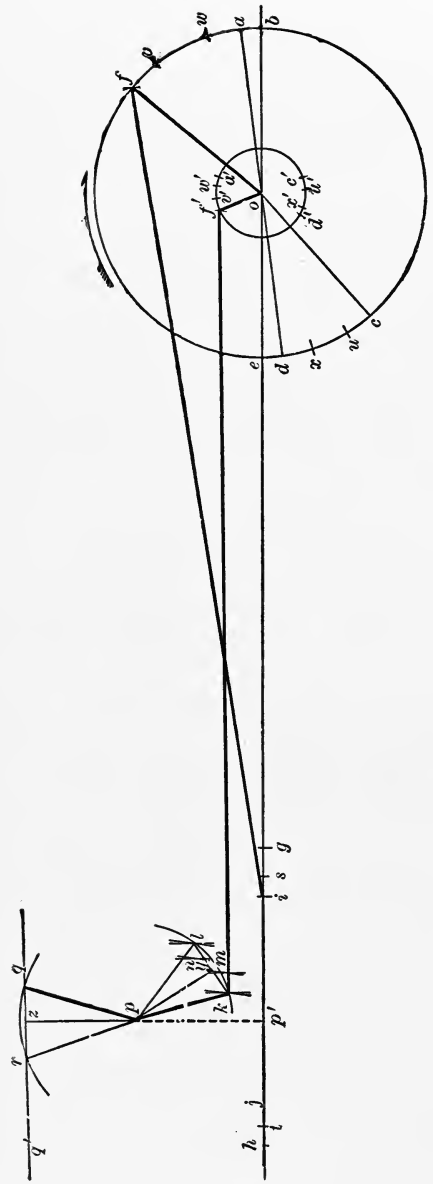

FIG. 28.

centres, draw arcs intersecting at *k*. In a similar way lay off the angles *eox* and *wob* equal to the exhaust-angle of lead as shown in Fig. 26. Make *hs* = *gt* = the piston position for exhaust-closure, and mark the positions *u* and *v* on the crank-circle.

Lay off the points *u'*, *v'*, *w'*, and *x'* so that the angles *uou'*, *vov'*, etc., are equal to *aoa'*. From *w'* and *u'*, with the eccentric-rod as a radius, mark the point *n*, and from *x'* and *v'* mark *m*. Bisect *kl* by the line *yp*, and select a point *p* on it such that *pk* will describe an arc which is as close to *m* as to *n*.

Draw *qq'* at the given distance from *hb*, and parallel to it, for the position of the valve-stem. As this distance is given in our data, *p* should be so selected that, while the end of the eccentric-rod moves from *k* to *l*, the end of the valve-

stem moves twice the lap from *q* to *r*. The arms of the reverse-lever should make an angle of *ypz*, and the arms should be *pk* and *pr* inches long. The centre of the bell-crank should be *op'* from the centre of the shaft and *pp'* above it. Our valve-stem must be determined exactly for the reverse-lever.

SETTING THE VALVE.

38. To put the Engine in the Centre.—Having the engine near the centre, turn it away from the centre about fifteen degrees. Put a centre-punch mark on the frame in such a position that a tram will readily reach to a turned portion of the shaft or wheel. Mark with the tram a line on the wheel, and scribe a mark across the cross-head and guide. Turn the engine past the centre we are working for until the mark on the cross-head and guide again exactly correspond. Do not turn it past and bring it up again. Again mark with the tram on the wheel.

Bisect the distance between the tram-marks, and turn the wheel until the point midway between the marks is just the length of the tram from the fixed point on the frame, and the engine will be on the centre. The other centre can be fixed in the same way.

39. To Set the Valve.—It is first necessary to adjust the valve on its stem and then to place the eccentric.

With the engine on one centre, set the eccentric about in the right place, a little ahead if anything, to have the ports well opened. Measure the lead. Turn the engine in the direction it is to run to the other centre, and again measure the lead. Move the valve on the stem half the difference of the leads on the two ends, so that if again tried they would be alike. Now move the eccentric on the shaft far enough to close the port and then back until the proper amount of lead is showing. Secure the eccentric in position, and the work is done.

In putting the engine on the centre, the lost motion

should be taken up so that the distance from the crank-pin to the cross-head pin is the same on both sides of the centre.

In taking up the lost motion of the eccentric and valve-rod it should always be done in the direction in which the engine is to turn.

QUESTIONS.

56. What data must be determined before the valve for an engine can be designed?

57. How is the width of the port determined?

58. How wide should the exhaust-port be?

59. What should be the thickness of the bridges?

60. What are the usual limits of lap, lead, eccentricity, and angular lead?

61. Explain in detail the usual method of determining the parts of the valve and connections.

62. How is the equalizing lever laid down?

PROBLEMS.

25. An engine 18 inches cylinder diameter by 24 inches stroke makes 125 revolutions per minute. The steam-ports are 15 inches long. Determine width of steam-port, thickness of bridges, and least width of exhaust-port.

26. An engine with the ports as in Problem 25 is to cut off at .8 stroke in each direction. The lead may be between $\frac{1}{8}$ and $\frac{3}{8}$ inch. The connecting-rod is 60 inches long, and the valve is on the side of the cylinder. The exhaust-lead is to be $\frac{1}{8}$ inch on both ends. Determine all the other parts of the motion.

27. An engine having ports as above is 140 inches from centre of shaft to centre of exhaust-port. The valve-stem is 40 inches long. The valve is above the cylinder, and the valve-face is 14 inches above the centre-line of the cylinder. If possible, with equal laps the cut-off is to take place at .8 stroke, and admission at 7° before the dead-point. Assume any other data that may be required, and design the entire motion, giving all the dimensions.

CHAPTER VII.

THE STEPHENSON LINK.

40. The Link.—The arrangements we have been dealing with heretofore have been for the purpose of causing the engine to run in one direction only. If an engine with an ordinary slide-valve had two eccentrics attached to the shaft, one for running in one direction and one for running in the opposite, so that either could be connected with the valve, the engine could be made to run in either direction. The ordinary device by which one or the other eccentric actuates the valve is called a link-motion. The one probably most commonly used is called Stephenson's link, a centre-line sketch of which is shown in Fig. 29. *ab* is the crank, *ac* and

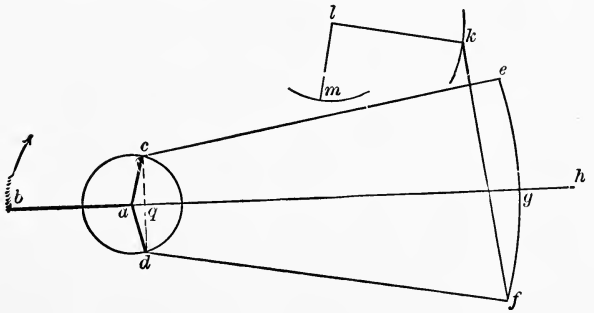

FIG. 29.

ad are the eccentrics, *ce* and *df* are the eccentric-rods, and *ef* is the link. *gh* is the valve-stem, the end *g* of which moves in a slot in the link.

Evidently if the link *ef* is lowered so that *e* comes to *g*, the eccentric *ac* moves the valve, and the engine turns in the direction of the arrow. If the link is raised the whole way, the eccentric *ad* moves the valve, and the engine turns

in the opposite direction. At any intermediate position the valve partakes of the motion of both eccentrics.

The link is caused to move by a hanger, as *kf*, attached to a point on the link, and having the other end pivoted to one arm *kl* of a bell-crank lever *klm*, so that by moving *m* to the right or left the link is raised or lowered.

41. Point of Suspension.—As the object of this arrangement is simply to raise and lower the link, and as *f* moves in an arc of a circle around *k*, the point on the link to which the hanger is attached should be such that it will not influence to any great extent the motion derived from the eccentric. This result can only be obtained by attaching the hanger to that point of the link which is most to be used.

In Fig. 30 suppose *p'* to be the point in the link at which

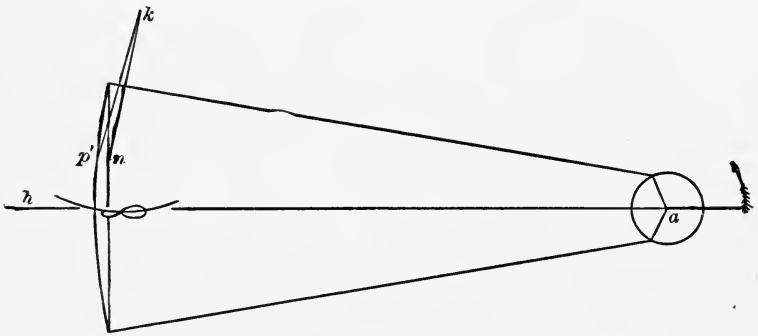

FIG. 30.

the link is mostly to be used. If the hanger is attached at *p'*, when the link is lowered to move the valve the point *p'* moves in the arc of a circle with *p'k* as a radius, the point *p'* moving very nearly in the straight line *ah*, and all the motion derived from the eccentrics being transmitted to the valve. Suppose now the hanger had been attached at *n* on the chord of the link. The point *n* will now move in the line *ah*, and the point *p'*, to which the valve-stem is attached, will move in a curve like that shown.

42. Slip of Block.—It is evident that as the valve-stem is constrained to move in the line *ah*, the link must slip up

and down as the shaft turns, and this is objectionable, if excessive. Ordinarily the link is suspended at one of three points—the lower end of the link, the centre of the arc of the link, or the centre of the chord. The last point, although probably the most often used, is not a good one, as there is always slip in the link in every position.

A series of experiments made by Prof. Marks shows the amount of slip for varying positions of the link and end of the hanger. In Fig. 31 four sets of diagrams are given for a link of the kind we are dealing with.

In set *A* the hanger had its lower end attached to the centre of the arc of the link, and the slip increases both ways from the centre; the set *B* is obtained when the lower end of the hanger is attached at the centre of the chord of the link, and there is no position of the link at which the slip is zero; set *C* is taken with the hanger attached to the bottom of the link, the slip when the block is on the upper half of the link being excessive, or great enough to interfere with the proper distribution of

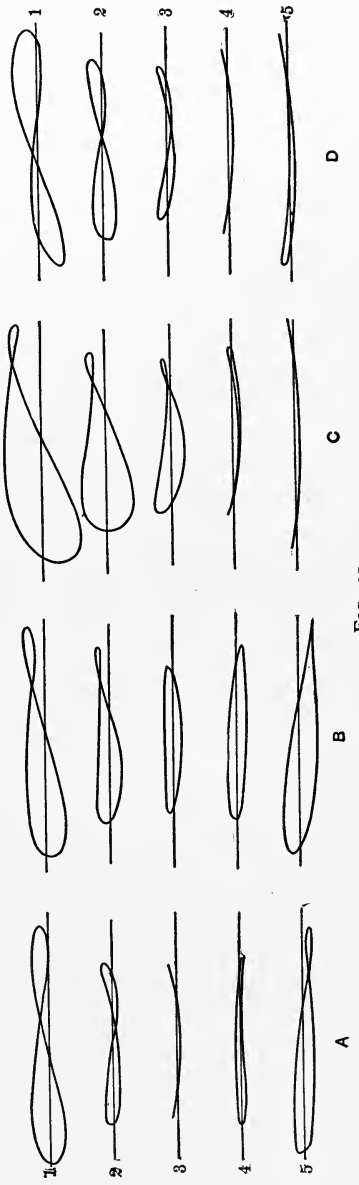

FIG. 31.

steam; set *D* is taken with the link suspended on the arc half-way between the centre and bottom of the link, and is used to show that the hanger should be attached at the point most to be used if otherwise practicable.

43. **Radius of the Link.**—The radius of the link is usually taken as equal to the length of the eccentric-rod for the purpose of making the valve move equally on both sides of a fixed point, no matter what is the position of the link. This it does not exactly accomplish, but it is nearly correct. The radius of the link is sometimes made equal to *ae*, Fig. 29, when the link is in its middle position and the eccentrics are as shown, and it is sometimes made equal to *qe*, the point *q* being half-way between *c* and *d*, as shown.

Practically there is no advantage in taking any one of these three lengths as far as keeping the centre of the movement of the valve at the same point.

44. **Kinds of Links.**—The links ordinarily used are represented in Fig. 32, in which *A* is the form usually used on

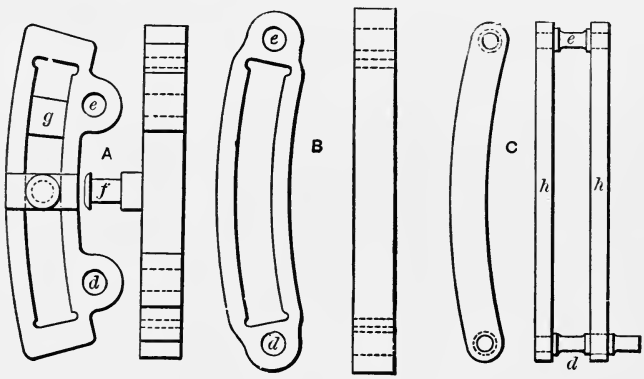

FIG. 32.

locomotives. The eccentric-rods are connected at *d* and *e*. The hanger is attached to a saddle *f*, and the end of the valve-stem is connected to a rectangular block *g*, called the link-block, sliding in the slot.

Another form of the slotted link is shown at *B*, which is connected to the eccentric-rods on the ends instead of at the

side, as in *A*. Larger eccentrics and a longer link are required than with form *A* to get the same movement of the valve.

The form often used on marine engines is shown at *C*. Two similar bars *hh* are held apart by the studs *d*, *e*, to which the eccentric-rods are secured, to an extension of one of which the hanger is usually fastened.

QUESTIONS.

63. Why is a link-motion ever used?

64. Make a sketch of a Stephenson's link.

65. Where on the link should the suspension-rod of the link be attached?

66. What effect has attaching the link to a point on the chord?

67. What is meant by slip?

68. How is slip affected by attaching the suspension-rod at different points on the link?

69. What is the radius of the link?

70. Why is the link curved at all?

71. Sketch the different forms of link.

CHAPTER VIII.

THE VALVE-DIAGRAM.

45. Travel of the Valve.—In our work, as ac is or should be small compared with ce, we will assume that e always moves in a straight line through a and e, and also that the angle eah is practically constant for any position of the link, during one revolution of the shaft. We will assume that the chord of the link is $2c$, and that the distance the link is raised or lowered from its middle position is $-$ or $+$ u.

In Fig. 33 call $ac = r = ad$, $ce = g = dr$, $er = 2c$, and $no = n'o' = u$. It is now required to find the distance the valve has moved from its central position when the link is lowered a distance u, and the crank has moved through an angle ω from the dead-point. In the figure the light lines show the position of the entire arrangement for $u = 0$, $\omega = 0$, and the heavy lines when the link is lowered u, and the crank has moved ω, e' practically moves in ae', and call $hae' = \gamma$. If the angle of advance is δ, the distance e' has moved from its central position is given by dropping a perpendicular $c's$ from c' on ae'. Then as is the distance e' has moved from its central position. Now $as = r \cos c'ae' = r \cos (90 - \omega - \delta - \gamma)$ from the figure.

Assuming that for the present the lower eccentric has not moved, the movement of n' to the left would be $\frac{n'r'}{r'e'}$ times as much as e' or $\frac{c+u}{2c} r \cos (90 - \omega - \delta - \gamma)$. But the movement of e' has been along ae', so that the point n' has moved horizontally or along ah only $\cos \gamma$ times this distance, or

$$\frac{c+u}{2c} r \cos (90 - \omega - \delta - \gamma) \cos \gamma. \quad . \quad . \quad . \quad (A)$$

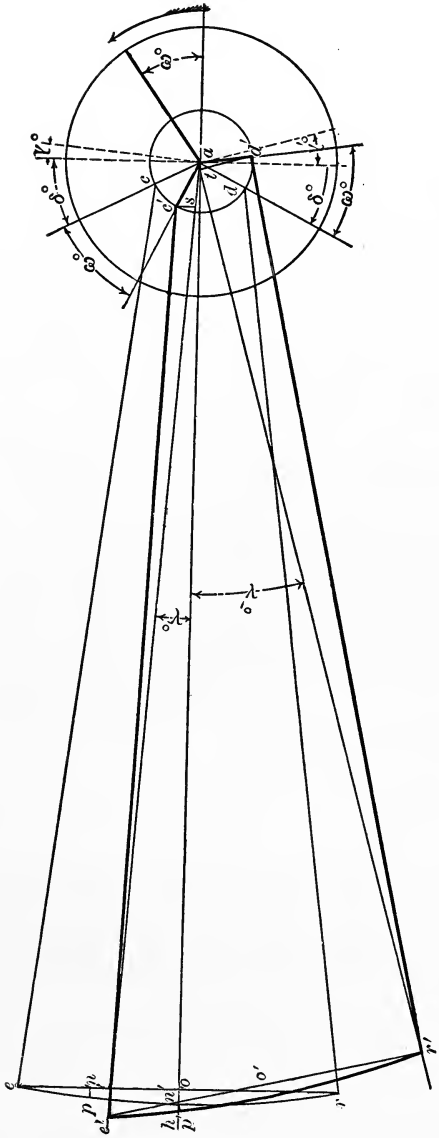

FIG. 35.

Similarly we could have considered that the point r' had moved a distance equal to at (when t is the foot of a perpen-

dicular from d' on ar') to the left of its middle position. Calling $har' = \gamma'$, we have

$$at = r \cos (90 - \gamma' - \delta + \omega),$$

and this would have caused n' to move to the left a distance

$$\frac{c-u}{2c} \times at \times \cos \gamma' \text{ or } \frac{c-u}{2c} r \cos (90 - \gamma' - \delta + \omega) \cos \gamma'. \quad (B)$$

If then we had supposed that first both eccentric-rod ends e' and r' were in their middle positions, and first e' and then r' had moved to the position shown by the heavy lines in Fig. 33, the valve would have moved a distance equal to the sum of (A) and (B), or

$$x = \frac{c+u}{2c} r \cos (90 - \omega - \delta - \gamma) \cos \gamma + \frac{c-u}{2c} r \cos (90 - \gamma' - \delta + \omega) \cos \gamma',$$

or

$$x = \frac{c+u}{2c} r \sin (\omega + \delta + \gamma) \cos \gamma + \frac{c-u}{2c} r \sin (\gamma' + \delta - \omega) \cos \gamma'. \quad (C)$$

From the figure, as γ and γ' are small angles,

$$\cos \gamma = 1, \cos \gamma' = 1, \sin \gamma = \frac{c-u}{g}, \sin \gamma' = \frac{c+u}{g}.$$

Expanding equation (C) and putting in the above values, we have

$$x = \frac{r}{2c}\left(2\frac{c^2-u^2}{g} \cos \delta \cos \omega + 2c \sin \delta \cos \omega + 2u \cos \delta \sin \omega\right)$$
$$= r \cos \omega \left(\sin \delta + \frac{c^2-u^2}{cg} \cos \delta\right) + \frac{ur}{c} \cos \delta \sin \omega;$$

which gives the distance the point n has travelled from its middle position. This movement is practically transmitted to the valve, and we can call it the distance the valve has moved from its central position.

46. The Valve-diagram.—We have seen that for a single eccentric the movement can be represented by

$$x = r \sin (\omega + \delta) = r \sin \omega \cos \delta + r \cos \omega \sin \delta ;$$

or if we call $r \cos \delta = A$ and $r \sin \delta = B$, we have

$$x = A \sin \omega + B \cos \omega.$$

In this equation A and B are evidently the coördinates of the point f in Figs. 11, 14, 15, or 16, or $\frac{A}{2}$ and $\frac{B}{2}$ are the coördinates of z, the centre of the valve-circles. Similarly for a Stephenson's link, if we call

$$A = \frac{ur}{c} \cos \delta \quad \text{and} \quad B = r\left(\sin \delta + \frac{c^2 - u^2}{cg} \cos \delta\right),$$

we have

$$x = A \sin \omega + B \cos \omega ;$$

showing that the valve movement can be represented by a circle as in the case of a single eccentric.

If in any Stephenson's motion we have r, c, δ, and g given, for each value of u we can determine A and B from the equation, and can draw the valve-circle corresponding to the position of the link, and then determine the various points of opening and closing of the ports.

If $u = c$, then $A_c = r \cos \delta$ and $B_c = r \sin \delta$, and the diagram is exactly the same as for a valve moved by a single eccentric. If $u = 0$, $A_0 = 0$ and $B_0 = r\left(\sin \delta + \frac{c}{g} \cos \delta\right)$, and for values of u between c and 0, the values of A and B fall between those given.

47. Curve of Centres.—Calling $\frac{A}{2}$ and $\frac{B}{2}$ the varying coördinates of the centres of the valve-circles for different values of u, we have by eliminating u from the values of A and B the following equation,

$$r\left(\sin\delta + \frac{c^2 - \frac{A^2c^2}{r^2\cos^2\delta}}{cg}\cos\delta\right) = B,$$

which must be the equation to the curve in which the centre of the valve-circle moves as u changes in value.

As this equation has only A^2 in it, the curve whose coördinates are A and B, or $\frac{A}{2}$ and $\frac{B}{2}$, is a parabola. The axis of B is the principal diameter of the parabola, and we have already seen that it passes through the points

$$\left\{\begin{array}{l}\frac{A_c}{2} = \frac{r}{2}\cos\delta,\\ \frac{B_c}{2} = \frac{r}{2}\sin\delta,\end{array}\right\} \text{ and } \left\{\begin{array}{l}\frac{A_o}{2} = 0,\\ \frac{B_o}{2} = \frac{r}{2}\left(\sin\delta + \frac{c}{g}\cos\delta\right)\end{array}\right\}.$$

48. To lay down the Valve-diagram.—We are now in a position to lay down the valve-diagram for any value of u. In Fig. 34 draw ab and cd at right angles to each other. Lay off $aof = \delta$, make $of = r$, and draw the valve-circle with of as a diameter. This then is the valve-diagram for $u = c$. From z, the centre of this circle, draw zg at right angles to cd and equal to g. Draw gh parallel to cd and equal to c, and join z and h. Then $oi = \frac{r}{2}\sin\delta$ from the figure, and

$$ij : gh :: zi : zg,$$

or

$$ij = \frac{gh \times zi}{zg} = \frac{c \times \frac{r}{2}\cos\delta}{g} = \frac{cr}{2g}\cos\delta,$$

and

$$oj = \frac{r}{2}\left(\sin\delta + \frac{c}{g}\cos\delta\right) = \frac{B_c}{2},$$

for $u = 0$.

A parabola can now be drawn through z and j, having j as a vertex and jc as the principal axis, by any known method;

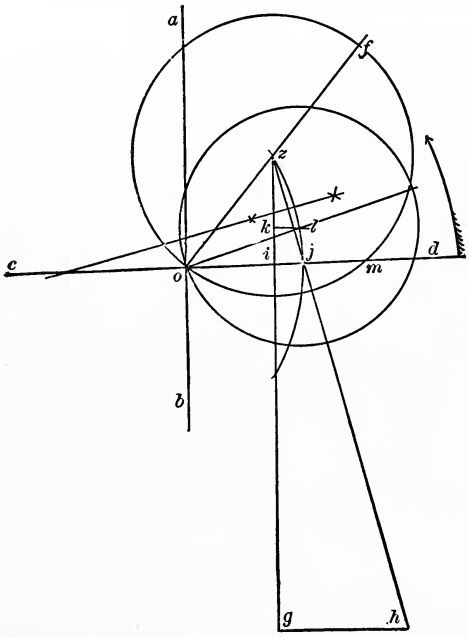

FIG. 34.

or an arc of a circle having its centre on cd and passing through z and j is close enough for practical purposes. Drawing the arc as shown, we can find the centre for any other value of u as follows:

For $u = c$, $\frac{A_c}{2} = \frac{r}{2}\cos\delta$, and for $u = u_1$, $\frac{A_{u_1}}{2} = \frac{u_1 r}{2c}\cos\delta$, and consequently $\frac{A_c}{A_{u_1}} = \frac{c}{u_1}$. Then to draw the valve-diagram for $u = \frac{c}{3}$, make $ik = \frac{1}{3} \times zi$ and draw kl parallel to cd.

Then l is the centre and ol is the radius of the valve-diagram for $u = \frac{c}{3}$. As the angle gzh only is required, the lines zg and gh can be drawn to any scale.

49. The Virtual Eccentric.—By the virtual eccentric is meant the eccentric which with certain given values of δ and r would give the same distribution of steam as the entire link-motion, and the valve-diagram drawn in the last article with ol as a radius is the virtual diagram for $u = \frac{c}{3}$; or if the link-motion was replaced by a single eccentric having $r = 2ol$ and $\delta = aol$, the distribution of steam would be the same as with the link at the point $u = \frac{c}{3}$.

50. Designing the Gear.—The designing problem is somewhat different. It may generally be stated as follows: Given ports, maximum point of cut-off, lead or angle of lead, distance from the centre of the shaft to the centre of the ports, to lay down the motion. The diagram for $u = c$ can be laid down from the data given as already shown for a valve with one eccentric, and the lap and value of r determined.

51. Valve-stem and Eccentric-rod.—The maximum length of valve-stem should then be determined from draw-

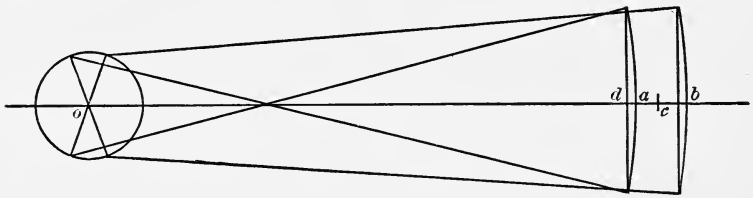

FIG. 35.

ings of the steam-chest and ports. This taken from the distance between the centre of the shaft and the centre of the exhaust-port is the distance from the centre of the shaft to the middle position of the centre of the arc of the link. Thus, in Fig. 35, a and b represent the two positions of the link when the crank is on the dead-points, and the distance we have

just determined should be the distance *oc* to a point half-way between *a* and *b*. This distance is practically *g*, and in designing may be taken so, any slight error being corrected in setting the valve, as the valve-stem should always be adjustable.

52. Length of Link.—To determine *c*, the half-link is rather a question of experience than of calculation. The chord of the link should be longer than the distance between the centres of the eccentrics, or it would be in line with the eccentric-rod at some time during the revolution of the crank. Perhaps a fair value would be $c = \frac{5}{2}r$ to $3r$. We have now all the data necessary to draw the valve-diagram for any value of *u*.

53. The Hanger.—There is one other point to be considered, and that is the position of the upper end of the hanger by means of which the link is moved, and this, of course, depends on the point of attachment of the link to the hanger. Suppose, first, that it is attached at the centre of the arc of the link. In Fig. 35 we have seen that the centre of the link, when the engine is on the dead-points, is equally distant from *c*; that is, for the central position of the link the centre of the hanger should be directly over *c*, which is at a distance *g* from *o*, and at a distance *h* = the length of the hanger above *ob*. It would be better, however, to lay off such a distance above *c* that the arc described by the lower end of the hanger would be equally above and below the line *ab*, that is, the distance above *c*, $h_1 = h\left(1 - \frac{1}{2}\text{ vers }\frac{\theta}{2}\right)$ when *h* = length of the hanger, and θ = arc described by the hanger.

According to Zeuner, the upper end of the hanger should move in the arc of a parabola, which can for all practical purposes be replaced by the arc of a circle. In this particular case we have taken, the arc should have its centre directly over the centre of the shaft, and at a distance *h* above it, and the radius should be *g*, the length of the eccentric-rod.

Actually, this is impracticable; and a convenient way of laying it down is as follows:

In Fig. 36 let *ab* be the line in which the valve-stem moves, *a* being the centre of the shaft. From *a* lay off *ac*

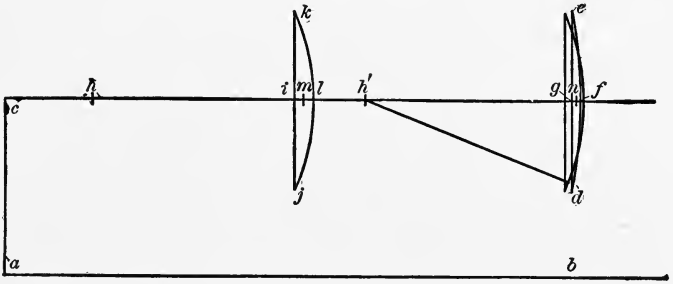

FIG. 36.

equal to the length of the hanger. With *c* as a centre and *g* as a radius, draw the arc *dfe*. Make $ge = gd = c$. Then *efd* is the arc in which the end of the hanger should move. This would require that one arm of the bell-crank lever should be equal to *g*. Assume that the greatest lever allowable is equal to the distance *hl*. From any point *h* in *cf*, with *hl* as a radius, draw *klj*. Make $kj = de$. Mark the centre of *il* at *m*, and of *gf* at *n*. Move *h* to the right a distance *mn* to *h'*; then *h'* is the centre for the bell-crank. The arc with *h'* as a centre and *hl* as a radius will then correspond with the arc *dfe* at two points, and will be nearly right through the rest of its motion.

If it is known that the engine is to run mostly with the link in one position, the corresponding point in *dfe* should be determined, and the point *h'* so fixed that the arc with *hl* as a radius would pass through that point on *dfe*.

54. Link Suspended at Bottom or Centre of Chord.— If the link is suspended at the bottom, exactly the same construction will hold good, except that instead of using an arc lying equally on both sides of *cf*, it should be all below this line, or *gd* should be 2*c*. If the link is suspended at the centre of the chord, the point *c* should be moved in the figure to the left of the line *ac* a distance equal to the distance from the point of suspension on the link to the arc of the link, or the distance *ad* in Fig. 35.

55. Open and Crossed Rods.—As shown in Fig. 33, the gear is said to be with open rods. Had the eccentric-rod from c been attached to r, and that from d to e, the gear would have been with crossed rods. In other words, with the crank on the dead-point away from the link, the gear is said to be with open or crossed rods, as the eccentric-rods stand apart or are crossed when viewed as in Fig. 33.

All our reasoning and formulæ apply to crossed rods as well as to open rods by putting for c, $-c$. The travel of the valve becomes

$$x = r \cos \omega \left(\sin \delta - \frac{c^2 - u^2}{cg} \cos \delta \right) - \frac{ur}{c} \cos \delta \sin \omega.$$

In Fig. 34, c being negative, gh should be laid off to the left of zg, and zlj curves the opposite way. The link must now be raised to turn the engine in the direction of the arrow in Fig. 33, and lowered to turn in the opposite direction.

From an inspection of Fig. 34 it is evident that the lead increases as the value of u becomes less, that is, with open rods the lead increases as the link is moved from full to mid gear and, with crossed rods, the lead decreases from full to mid gear.

QUESTIONS.

72. What is the equation for the movement of the valve?

73. What approximations are made in determining the movement of the valve?

74. What is the valve-diagram for the Stephenson link when u has a given value?

75. What is meant by the curve of centres? What is this in the Stephenson link, and how can it be replaced by a circle on the diagram?

76. Explain fully the method of laying down the Zeuner diagram for the Stephenson link.

77. What is meant by the virtual eccentric? Sketch a Stephenson link-motion and the virtual eccentric by which it might be replaced.

78. How determine the length of valve-stem and eccentric-rod for a given engine?

79. What should be the length of the link?

80. How lay down the curve in which the upper end of the hanger or suspension-rod should move?

81. When the link is suspended at the top or bottom how much of the arc moved through by the arm of the reversing-shaft or tumbling-shaft should be used?

82. What is meant by crossed rods?

83. How draw the diagram for crossed rods?

84. Make a sketch with the crank on the centre towards the link of an engine with crossed rods.

PROBLEMS.

28. Given diameter of cylinder 18 inches, stroke 22 inches, connecting-rod 88 inches; port-opening 3 inches, cut-off when $u = c$ at .8 stroke in one end; length of link 13 inches, eccentric-rod 66 inches, $\delta = 20°$. Draw the Zeuner diagram and determine the point of cut-off, when $u = 3$ and $4\frac{1}{2}$ inches, in both ends of the cylinder, the lap to be the same on both ends.

29. Eccentric-rod 50 inches, connecting-rod $82\frac{1}{2}$ inches, stroke 22 inches, angular advance 16°, cut-off for $u = c$ at .85 stroke, $2c = 12\frac{1}{2}$ inches, $r = 3''$. What must be the lap on each end of the valve and what the lead and cut-off when $u = 4$ inches with crossed rods.

30. In the valve-diagram for the last problem lay down the parabola for the curve of centres, and determine in inches the actual difference in cut-off between that given for the circular curve of centres and that for the parabola for $u = 4$ inches, on both strokes, the lap to be as determined in the last problem.

31. Given $r = 4\frac{3}{4}$ inches, eccentric-rod 76 inches, $2c = 24$ inches for a bar link. 12 inches is the greatest movement of the link-block in the link. If the angle of advance is 18°, what is the crank position for cut-off? If the cut-off is to be at .7, the stroke and the angle of lead to be 7°, what is the angular advance?

CHAPTER IX.

EQUALIZING LEAD AND CUT-OFF.

56. **Equalizing Lead.**—The change in lead, referred to in the last article, may be lessened by changing the angle of advance, or, what amounts to the same thing, by making the angle of advance of the two eccentrics different. In Fig. 37 (which is practically Fig. 29 with the line *ab'* added), if *ac* and *ad* are the eccentrics in the same relative

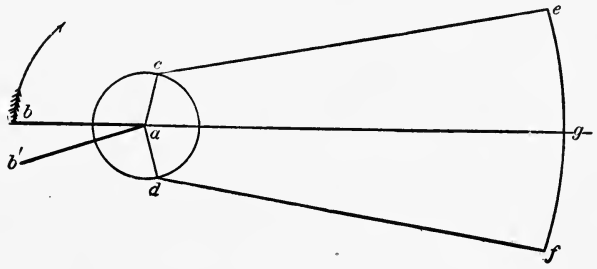

FIG. 37.

position, the crank now occupying the position *ab'*, it is evident that the crank has not reached the dead-point by the angle *bab'*.

In Fig. 38 we have the valve-diagram for seven positions of the link—three for running in one direction, three for the other, and one for the link in its middle position, or in mid-gear, as it is called. Evidently in this figure the line *ab* represents the position of the crank when the old crank *ab*, Fig. 37, is on its dead-point. When the new crank *ab'* of Fig. 37 reaches

the dead-point, the old crank in Fig. 38 has moved to ab', the angles bab' in the two figures being equal. That is, ab' corresponds to the dead-point of the new crank. If, therefore, we turn the entire diagram through the angle bab', we have the circles in the positions we are accustomed to see them, ab is again the dead-point, and the angle of advance for the upper circle has been increased by bab', while the angle of advance for the lower circle has been decreased by the same amount.

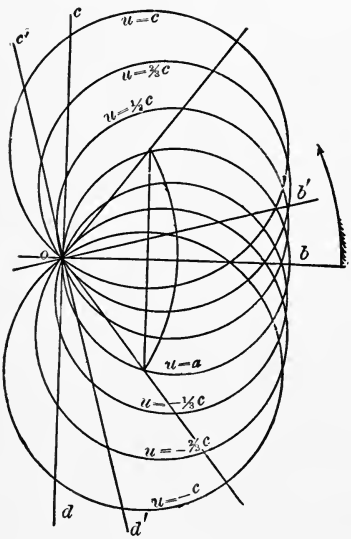

FIG. 38.

An inspection of the figure will show that the lead does not vary so much in the upper valve-circles when ab' is the dead-point, and is more nearly constant whatever the position of the link as long as the engine turns in the direction of the arrow; but it will also be seen that the lead is much more variable when running in the opposite direction. If then the crank is turned backwards from the direction in which the engine is intended to run most of the time, the lead going one way is more nearly equalized.

This angle is readily obtained. Let it be σ; then from our equation for the movement of the valve for $\omega = \sigma$, $u = c_1$,

$$x = r \cos \sigma \left(\sin \delta + \frac{c^2 - c_1^2}{cg} \cos \delta \right) + \frac{c_1 r}{c} \cos \delta \sin \sigma.$$

For $\omega = \sigma$, $u = 0$, we have

$$x = r \left(\sin \delta + \frac{c^2}{cg} \cos \delta \right) \cos \sigma.$$

In order that the lead may be constant, these values of x should be equal; or equating and reducing, we have

$$\frac{rc_1^2}{cg} \cos \delta \cos \sigma = \frac{c_1 r}{c} \cos \delta \sin \sigma,$$

or

$$\tan \sigma = \frac{c_1}{g}.$$

That is, if c_1 is the maximum distance the link is to be lowered, the crank might be put back $\sigma°$; or, in other words, the go-ahead eccentric could be set with an angle of advance $\delta + \sigma$ and the backing eccentric with an angle of advance $\delta - \sigma$. Referring to Fig. 34, it will be seen that the angle gzh is the angle σ.

It is possible to make the lead the same for both ends of the cylinder, for both full and mid gear, by altering the radius of the link. Thus, in Fig. 39, let a, b, c, and d be the positions of the eccentrics corresponding to the dead-points, and eg and fh be the chords of the link. With a as a centre and af as a radius, mark the position k; and with c as a centre and ce as a radius, mark the position i. Let o be the centre of lm and p the centre of ik, then op is the rise of the arc of the link; or making lr and mn equal to op, the arc of the link should pass through e, r, and g, or f, n, and h. This would bring the valve at such a point that, whether in full or in mid gear, the lead would be the same for the two ends of the cylinder, but it would still vary somewhat between these points.

57. **Equalizing Cut-off.**—It would be possible by using an equalizing lever to make the cut-off exactly the same on both ends of the cylinder for one position of the link, but the best way of accomplishing equalization of cut-off is by finding tentatively such a hanger that the link is in the right position when cut-off is to take place. If we can equalize it for full gear and say for cut-off at half-stroke, or when $x = c$

and $u = \frac{c}{2}$, it will be practically equal for the points between.

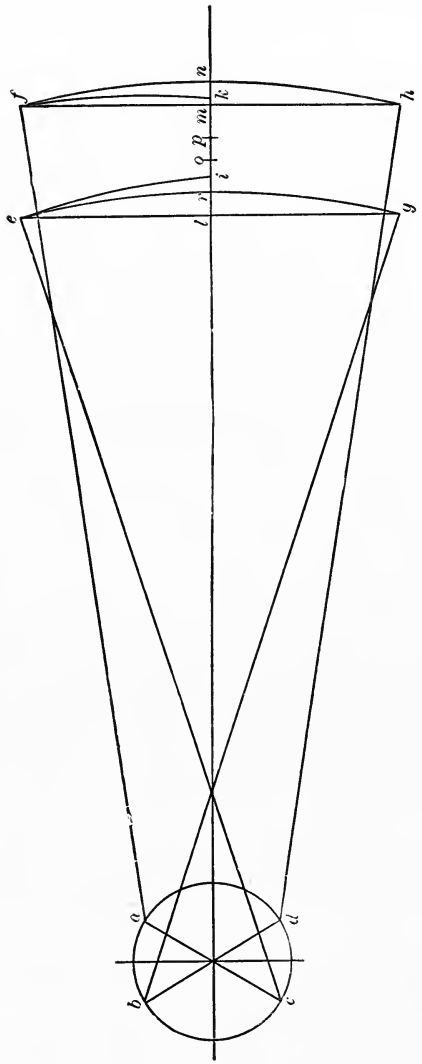

Fig 39.

It is first necessary to show how to lay down the link for any position of the crank.

58. To lay down the Motion.—In Fig. 40, let *o* be the centre of the shaft, *oa* the crank, and *ob* and *oc* the eccentrics

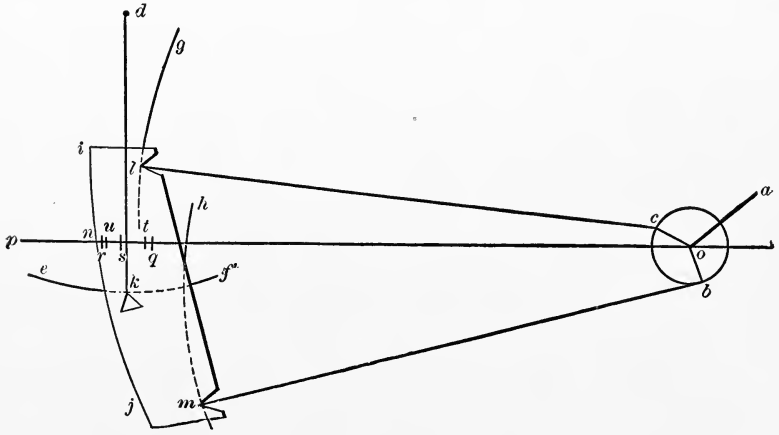

FIG. 40.

Let *d* be the desired position of the point of suspension of the hanger. Then with *c* and *b* as centres, and the length of the eccentric-rod measured to the point of attachment to the link (which may or may not be *g*, depending on the kind of link used) as a radius, describe arcs *g* and *h*. With *d* as a centre and the length of the hanger as a radius, describe an arc *ef*.

Cut out of stiff cardboard or soft wood veneer a template, shown in Fig. 41, in which *ij* is the arc of the link, *k* is the point of attachment of the hanger, and *l* and *m* are the points of attachment of the eccentric-rods. Referring to Fig. 40, if this template is put on Fig. 40 so that *l* falls on the curve *g*, *m* on the curve *h*, and *k* on the curve *ef*, the arc *ij* will then show the position of the centre line of the link, and *n* will be the position of the end of the valve-stem.

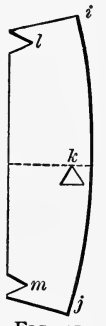

FIG. 41.

59. To lay down the Centre of the Travel of the Valve.—Put the crank on each dead-point and the line *lm* on the template vertical, and find positions *q* and *r*

corresponding to n of Fig. 40. A point s half-way between these points will be the centre of travel of the end of the valve-stem. If we are using a link such as is used in Fig. 35, the point c of that figure is the centre desired. The distance su is the distance the valve has moved from its central position. Now $sq = sr$ is the distance the valve has moved from its central position when the crank is on the dead-points, or is the lap plus the lead. If $st = su =$ the lap, the arc of the link ij must pass through t and u when steam is admitted and cut off from the cylinder, because the valve will then have moved a distance equal to the lap, or is just ready to open or close the port.

60. To determine the Centre of Suspension of the Hanger.—In Fig. 40 put the crank at the position for the desired cut-off, and draw curves h and g corresponding. Put the template so that l is on g, m on h, and the arc ij passing through u. Mark the position of k as in Fig. 42. Turn the crank to the corresponding position of the return stroke, and going through the same process, but making ij pass through t gives another point k'. Now to cut off equally on both strokes the lower end of the hanger must pass through k and k', or its centre can be found at d by striking arcs intersecting at d with k and k' as centres and the length of the hanger as a radius.

If now we find several points, as d', d_2, d_3, at which the upper end of the hanger must be for equal cut-off, say, at full gear, and when cutting off at half-stroke running in both directions, we have four points through which the upper end of the hanger must move. Finding the centre of the circle through d, d', d_2, d_3, gives o as the centre of the reversing or tumbling shaft and od as the length of the tumbling-shaft arm.

61. Position of Stud.—The point of attachment of the hanger to the link we have taken as some distance back of the arc in our figure simply for convenience in drawing. In many link-motions as used on locomotives the centre of the stud is so located. The point is usually determined by draw-

ing a centre-line on the template and finding the position of this centre-line for cutting off at each half-stroke, then choos-

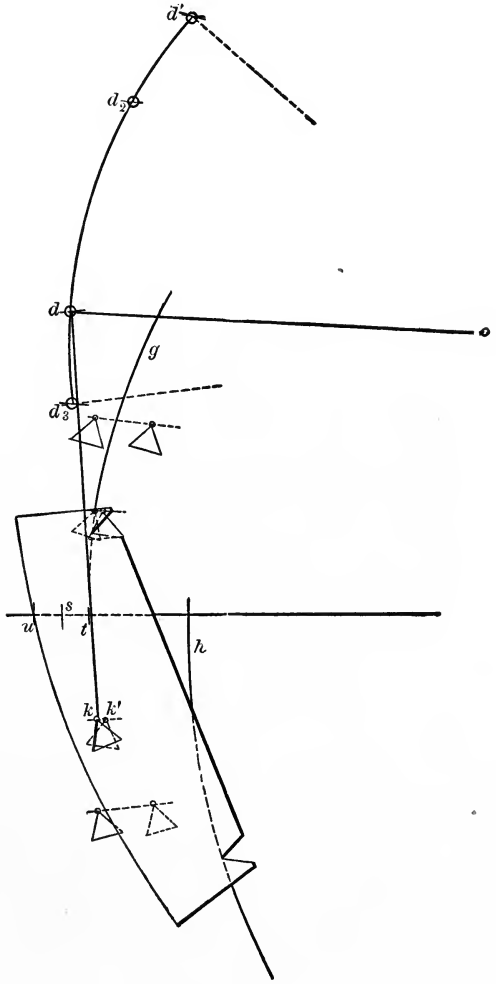

FIG. 42.

ing points k and k' in these lines so that kk' is horizontal, and the points are the same distance from the arc of the link.

62. Reducing Slip.—As the end of the hanger supporting the link is usually constrained to move in the arc of a circle, and the tendency of this point when not over the link-block is to move in a figure such as is shown in Fig. 31, the block will slip in the link a greater or less amount.

A number of expedients, such as reducing the travel, altering the angular advance, or lengthening the link, are resorted to, thus necessitating a complete reconstruction of the gear. A suitable choice of the length of hanger will often reduce the slip materially. In Fig. 43 we have the centre-line of the link shown for a number of positions of the crank.

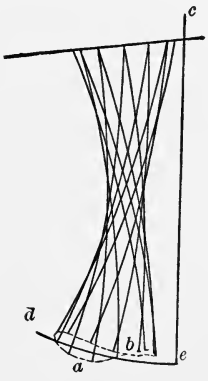

FIG. 43.

If the link is to be supported at the bottom, the curve *ab* is the path in which the centre of the link moves when the link is the whole way down and moves with no slip. If now we find a centre such that the arc *de* is the closest possible to the curved line *ab*, then *cd* is the best length to use for the length of the hanger. If the link is not supported at the bottom, a figure similar to *ab* can be drawn from the actual point of support, and the radius found from that. After the length of the hanger and centre of tumbling-shaft are determined, if the points of the gear interfere with each other or the framing, modifications must be made in the determined parts to remedy the trouble.

63. Error of the Zeuner Diagram.—In deducing the equation for the Zeuner diagram we have made certain approximations which cause the diagrams to be more or less inexact. To show the amount and position of these errors, we have in Fig. 44 drawn the valve-diagram in full lines, and the actual position of the point on the link to which the valve-stem is connected for the time being in broken lines, the supposition being that this point moves exactly in the line of motion of the valve-stem.

It will be seen that the errors are least while the piston

is on that part of its travel away from the shaft, or in this case when the cylinder is to the left of the crank, and greatest while on that part of its travel towards the shaft. It will

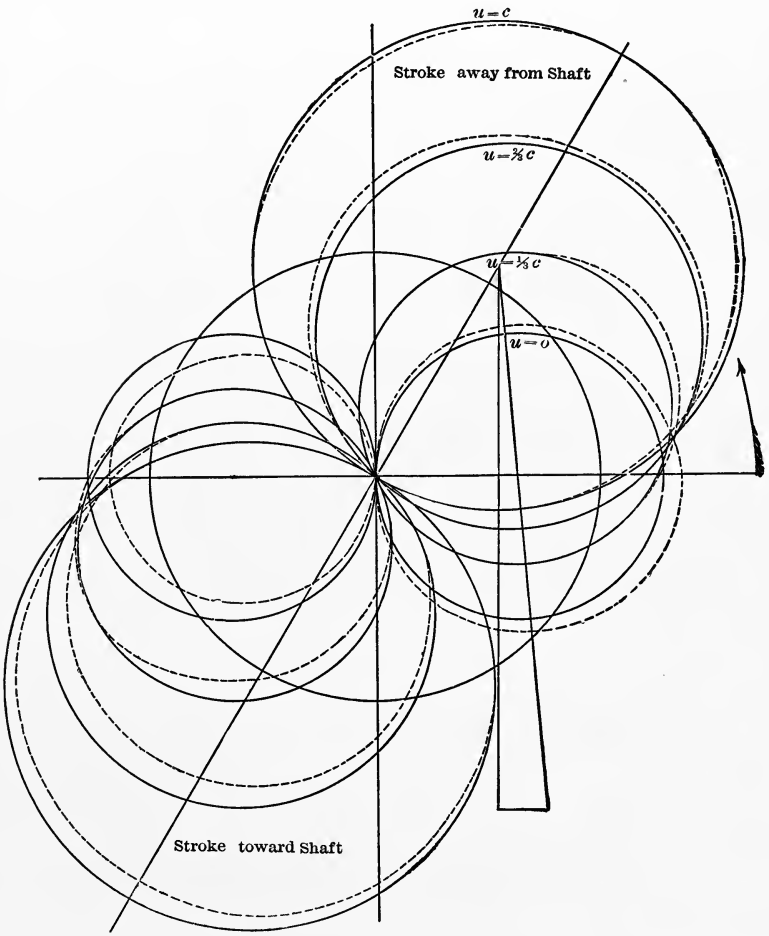

FIG. 44.

be seen also that the angles of advance could, in the case taken, have been made different for the two eccentrics with advantage. The irregularity of the diagram also makes the point of cut-off different for the two ends of the cylinder;

that is, the crank positions when cut-off takes place are not 180° apart, but the errors of the diagram are such that the angularity of the connecting-rod when two and one half to three times the stroke in length brings the piston to more nearly the same distance from the beginning of each stroke when the valve closes.

QUESTIONS.

85. How can the lead be made more nearly constant with a Stephenson link?

86. Through what angle should the angular advance of the eccentric be changed to make the lead at $u = c_1$ and $u = o$ the same?

87. How can the lead be equalized by changing the radius of the link?

88. How determine the position of the link for any given value of u and ω?

89. How can the centre of the travel of the end of the valve-stem be laid down?

90. Explain the method of determining the arc through which the upper end of the hanger must move to equalize the cut-off.

91. Is it possible to make the cut-off exactly equal for more than two values of u on each side of $u = 0$?

92. Why is the stud often placed back of the arc of the link?

93. How can the point be determined?

94. Is the slip greater or less than if placed on the arc?

95. Is there any advantage in so placing the stud?

96. How determine the length of hanger which will reduce the slip?

97. In the Zeuner diagram what are the errors, and is admission, cut-off, or maximum port-opening most affected thereby?

98. Do the errors of the diagram tend to neutralize or to increase the variation in cut-off due to the angularity of the connecting-rod?

PROBLEMS.

32. Given in a Stephenson link with open rods $r = 5\frac{1}{4}$ inches, eccentric-rod $75\frac{1}{4}$ inches, $2c = 26$ inches; steam-lap $2\frac{1}{16}$ inches, cut-off for $u = c$ at .72 stroke. What is δ, and to what angles should δ be changed for constant lead at $u = 0$ and $u = c$?

33. What should be the radius of the link if $2c = 12$ inches, $r = 2\frac{1}{2}$ inches, length of eccentric-rod = 56 inches, and the angle of advance $\delta = 16°$, if the lead at full and mid gear is to be equalized.

34. In a Stephenson link-motion with the eccentric-rod attached back of the link having the following data determine the position of the link for $u = 4$ inches, $\omega = 40°$: Eccentricity $2\frac{1}{2}$ inches, angular advance 18°, eccentric-rod 56 inches to the arc and $53\frac{3}{16}$ inches to the point of attachment to the link: radius of the link 55 inches, $2c = 11\frac{1}{16}''$; centre of tumbling-shaft 39″ from centre of shaft and 11 inches above centre of the engine; length of hanger $14\frac{1}{2}$ inches; arm of tumbling-shaft curved so that when the link is in its middle position the upper end of the hanger is $9\frac{1}{2}$ inches above the centre-line of the engine and 56 inches from the shaft; the point of suspension of the link being $\frac{9}{16}$ inch back of the centre of the arc, stroke 24 inches, and connecting-rod $89\frac{5}{8}$ inches.

35. With the above data find the centre of the travel of the end of the valve-stem.

36. With the above data as to the link, and with the length of hanger $14\frac{1}{2}$ inches, find the position of the tumbling-shaft and length of the arm so that the cut-off is equal for both ends at .5 and .8 stroke.

37. Taking the link data as above, find the point of cut-off in one end corresponding to $\frac{1}{2}$ stroke in the other end, and after changing the data so that the radius of the link is 56 inches, the centre of suspension is at the centre of the arc of the link, and the upper end of the hanger is at the same point as before, the other data remaining the same, examine the cut-off for the same position of the tumbling-shaft arm

and determine whether the changing of the radius of the link and point of suspension in this case has changed the cut-off.

38. In the problem thus given is $14\frac{1}{2}$ inches the best length of the hanger that could have been taken? If not, determine the best length to reduce the slip as much as possible for full gear, the link to be supported $\frac{9}{16}$ inch back of centre of arc.

39. Draw a Zeuner diagram for Problem 34, and lay out the actual movement of the valve for $u = c$, $u = \frac{c}{2}$, and $u = 0$.

40. Replace the single eccentric in Problem 27 by a link-motion which, when in full gear, will fulfil the same conditions. The length of the hanger is not to be greater than $2c$, and cut-off is to be equal at .5 and at .8 stroke for the two ends of the cylinder.

CHAPTER X.

THE GOOCH MOTION.

64. The Gooch Link.—Fig. 45 represents a centre-line diagram of a Gooch link-motion. *ab* is the crank; *ac* and *ad* are the eccentrics set at equal angles of advance; *ce* and *df* are the eccentric-rods; *ef* is the link which is curved in

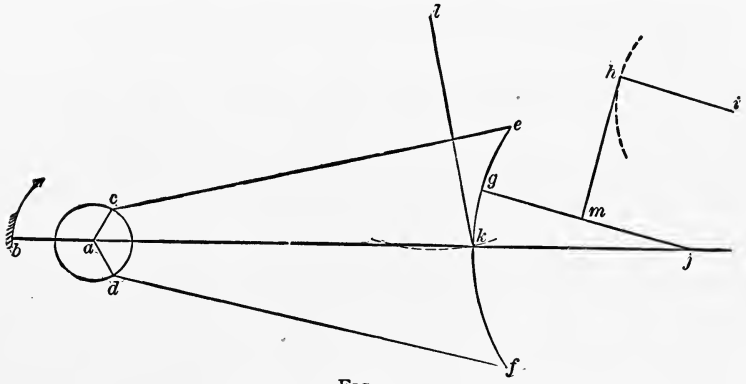

FIG. 45.

the opposite direction to the Stephenson link; *kl* is a suspension-rod which supports the link at its central point and is attached to a fixed point *l* on the engine-frame; *gj* is the radius-rod, the end *g* sliding in the slot of the link, and the end *j* being attached to the valve-stem. The end *g* is moved up and down in the link by means of the hanger *hm*, the lower end *m* of which is attached to the radius-rod and the upper end *h* is attached to one arm *hi* of a bell-crank pivoted at *i*.

When *g* and *e* are together, the eccentric *c* drives the valve, and the engine turns in the direction of the arrow. When the radius-rod is lowered so that *f* and *g* are together,

the eccentric *ad* drives the valve, and the engine turns in the opposite direction.

65. Movement of the Valve.—The method followed in deducing the equation for the movement of the valve is identical with that followed for the Stephenson link-motion. In Fig. 46 the crank and gear are represented when the crank has moved an angle ω from its dead-point and the radius-rod has been raised a distance u.

The distance the point e has moved from its central position along the line ae is

$$an = r \cos (90 - \omega - \delta - \gamma) = r \sin (\omega + \delta + \gamma).$$

The distance the point g has moved corresponding thereto is

$$\frac{c + u}{2c} r \left(\sin (\omega + \delta + \gamma)\right) \cos \gamma.$$

In the same way the point f has moved from its central position

$$ap = r \cos (90 - \delta - \gamma + \omega) = r \sin (\delta + \gamma - \omega)$$

and g has moved a corresponding distance

$$\frac{c - u}{2c} r \sin (\delta + \gamma - \omega) \cos \gamma,$$

and the motion of g from its central position is therefore

$$x = \frac{c + u}{2c} r \sin (\omega + \delta + \gamma) \cos \gamma + \frac{c - u}{2c} r \sin (\delta + \gamma - \omega) \cos \gamma.$$

As in Fig. 45 the radius-rod gj is long as compared to gk or ke, the horizontal motion of j is practically the same as of g, and we have the above value of x for the movement of the valve from its central position.

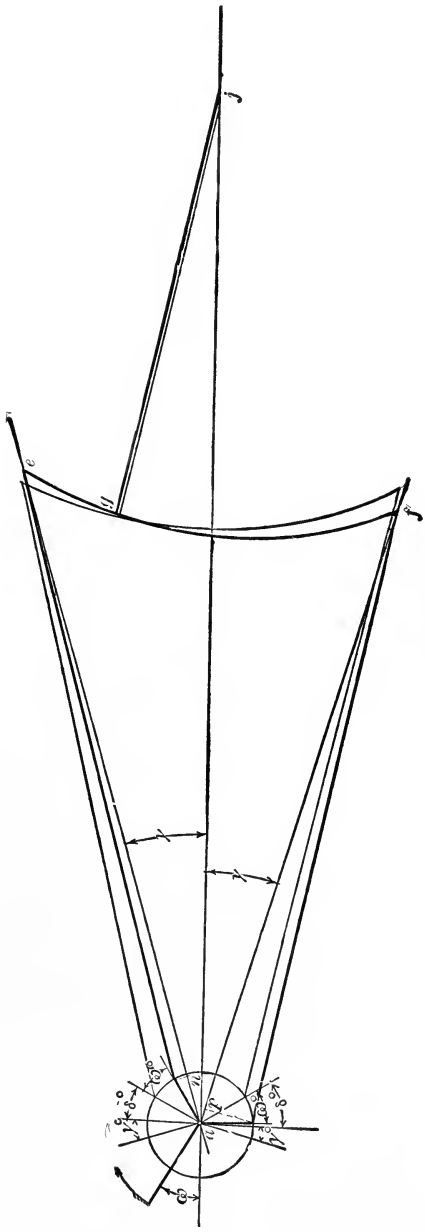

FIG 46.

Expanding the second member of this equation, and making $\cos \gamma = 1$, $\sin \gamma = \frac{c}{g}$, we have

$$x = r\left(\frac{c}{g}\cos \delta + \sin \delta\right)\cos \omega + \frac{ur}{c}\left(\cos \delta - \frac{c}{g}\sin \delta\right)\sin \omega.$$

This equation can also be put in the same form as for a simple valve. If we let

$$r\left(\sin \delta + \frac{c}{g}\cos \delta\right) = A$$

and

$$\frac{ur}{c}\left(\cos \delta - \frac{c}{g}\sin \delta\right) = B,$$

we have

$$x = A \cos \omega + B \sin \omega,$$

which is the same equation as for a simple valve.

66. Constant Lead.—An examination of the equation for x will show that the value of A is constant whatever the value of u; that is, for every value of u the valve-circle crosses the line representing the dead-point at the same point, or the lead is constant.

67. Radius of Link.—When the engine is on the dead-point, as shown in Fig. 45, if the lead is constant, the point j must not change position as the radius-rod is raised or lowered. The link must therefore be drawn with j as a centre and jg as a radius, or the radius of the link is the length of the radius-rod. The eccentric-rod and the radius-rod should each be as long as possible, but a better distribution of steam is generally obtained by making the eccentric-rod the longer. The same statements as to the length of the link apply here as in the case of Stephenson's link. The distance from the centre of the shaft to the centre of the exhaust-port can be approximately determined as follows: The mean position of the chord of the link is approximately

at a distance g from the centre of the shaft. The distance from the chord to the arc is $\frac{c^2}{2g_1}$, approximately. The distance from the centre of the shaft to the centre of the arc of the link when the arc is in its middle position is $g - \frac{c^2}{2g_1}$. Adding to this the length of the radius-rod g_1 and the length of the valve-stem to the middle of the valve g_2, we have $g - \frac{c^2}{2g_1} + g_1 + g_2 =$ the distance from the centre of the shaft to the centre of the exhaust-port. This is, of course, only an approximation, but it is correct enough for practical purposes.

68. Suspension-rod.—The point of support of the suspension-rod for the link should be in such a position that the rod swings equally on each side of a vertical line. Fig.

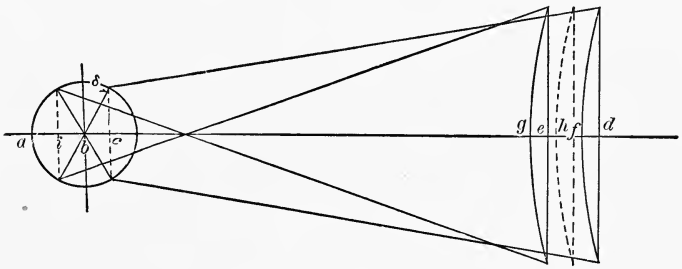

FIG. 47.

47 gives the two positions of the link when the crank is on the dead-points.

$$bd = bc + cd = r \sin \delta + g,$$

approximately, and

$$be = -ib + ie = -r \sin \delta + g,$$

and the mean position is at $bf = g$ from the centre of the shaft. As the hanger is attached to the arc, and not the chord, the distance

$$bh = g - \frac{c^2}{2g_1}.$$

If then the suspension-rod is attached to the link at the centre of its arc and to a fixed point whose distance from b is $g - \frac{c^2}{2g_1}$ parallel to ad, and the length of the suspension-rod above ad, the attachment will give the proper motion. The distance above ad is usually given as the length of the suspension-rod, but this brings the arc in which the centre of the link swings entirely above ad, while to keep the motion as nearly correct as possible the line ad should intersect the arc, and the point g of the link should swing equally above and below this line.

69. The Hanger.—To determine the arc in which the point h of Fig. 45 should move. From the point h in Fig. 47, just determined, lay off the length of the radius-rod to the right in the figure. Mark on this distance the point m of Fig. 45. Through the point thus determined lay off a distance mh at right angles to ad. Through this point draw an arc whose centre is on the right side of the link whose radius is the length of the radius-rod, and whose centre lies at a distance equal to the length of the hanger above aj, Fig. 45. This arc should lie equally above and below the line through the centre of the arc, parallel to aj, and is the curve in which h should move. Practically this is much too large, and this arc would be replaced by one of much smaller radius, the centre for which would be determined in the same way as shown for a Stephenson's link in Fig. 36.

70. The Valve-diagram.—If all the data relating to a Gooch motion is given, the valve-diagram can be laid down as follows: Suppose the lap, angle of advance, throw of the eccentric, length of link, eccentric-rod, radius-rod, and distance to the centre of the exhaust-port be given, to determine the point of cut-off, etc., for a given value of u.

Draw ab and ac in Fig. 48 at right angles to each other, and lay off $baf = \delta$. Make $ad = c$, and $ae = g$, and $eh = r$. Draw the perpendicular ih to ae. Make the angle $fak = dcc$, and lay off $ak = ei$. ak is then the diameter of the virtual

eccentric for $u = c$. Or, make $af = r$, $fak = dea$, and draw fk at right angles to af: then ak is the diameter of the virtual eccentric.

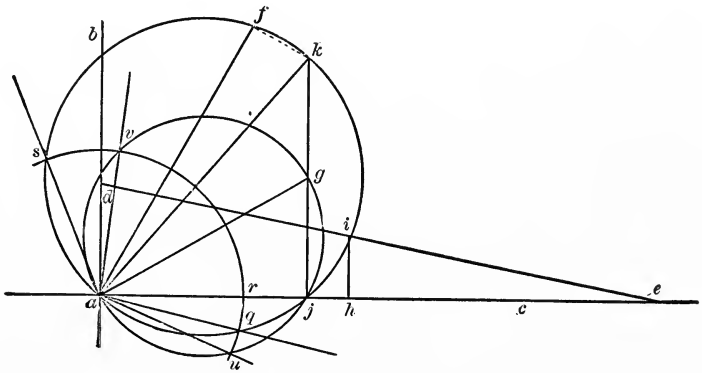

FIG. 48.

The proof of the construction is as follows: For the coordinates of k we have, from page 78,

$$A = aj = r\left(\sin\delta + \frac{c}{g}\cos\delta\right),$$

$$B = kj = r\left(\cos\delta - \frac{c}{g}\sin\delta\right),$$

$$\frac{A}{B} = \tan akj = \frac{\sin\delta + \frac{c}{g}\cos\delta}{\cos\delta - \frac{c}{g}\sin\delta} = \frac{\tan\delta + \frac{c}{g}}{1 - \frac{c}{g}\tan\delta}.$$

As $\frac{c}{g} = \tan dea$,

$$\tan akj = \frac{\tan\delta + \tan dea}{1 - \tan\delta\tan dea},$$

or

$$akj = \delta + dea,$$

$$ak\sin akj = aj = r\left(\sin\delta + \frac{c}{g}\cos\delta\right)$$

$$= r \sin \delta + r \tan dea \cos \delta$$

$$= \frac{r \sin \delta \cos dea + r \sin dea \cos \delta}{\cos dea}$$

$$= r \frac{\sin (dea + \delta)}{\cos dea},$$

or

$$ak = r \frac{\sin (dea + \delta)}{\cos dea \sin akj} = \frac{r}{\cos dea},$$

$$ak = r \sec dea = ei,$$

as by construction. Draw the lap-circle *qvs*.

The point of admission for $u = c$ is then on *aq*, and of cut-off on *as*. The lead is *rj*. For any other value of *u* lay off the point *g* so that $\frac{jg}{jk} = \frac{u}{c}$. Join *a* and *g*, and draw the valve-circle with *ag* as a diameter; *au* will now be the point of admission, *av* the cut-off, and the lead *rj* will be the same as before.

71. To Design a Gooch Motion.—We will suppose the same data to be given as in a Stephenson's link to design a Gooch motion, i.e., ports, point of cut-off, angle of lead, distance from centre of shaft to centre of exhaust-port, to lay down the motion. The length of the valve-stem and link should first be determined or assumed. From the distance between the centre of the shaft and the exhaust-port should be taken the length of the valve-stem. The remainder is $g + g_1 - \frac{c^2}{2g_1}$. If now *g* or g_1 is assumed, the other is determined. All these data must be fixed before trying to lay down the diagram.

In Fig. 49 draw *ab* and *ac* at right angles, and let *as* and *aq* be the positions of the crank for cut-off and admission. Bisect the angle *saq* by the line *ak*, and find the diameter *ak* of the virtual eccentric for the required port-opening, as already shown in Chapter III. Make $ad = c$ and $ae = g$, and

lay off *ei* equal to *ak*. Draw *ih* parallel to *ab*. Then *eh* is the eccentricity. Make *kaf* = *dea*. Then the angle *fab* is the angular advance.

We have now all the data required for laying down the motion, except the hanger for the link and radius-rod. The

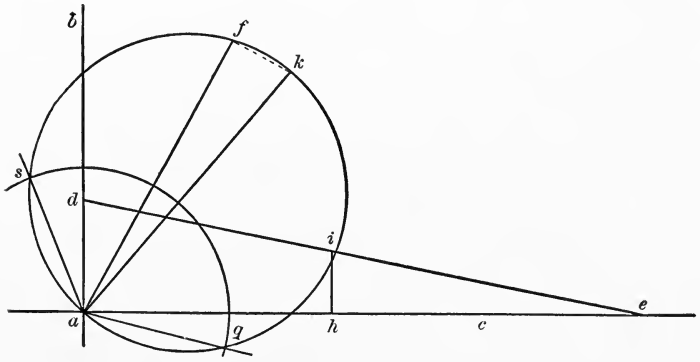

FIG. 49.

only directions that can be given about them are to make them both as long as possible, and to support them, as previously indicated.

QUESTIONS.

99. Sketch a Gooch motion and describe it.

100. Deduce the equation for the movement of the valve, and prove that the Zeuner diagram represents it.

101. How does the lead vary with a Gooch motion?

102. Why is the radius of the link made equal to the length of the radius-rod?

103. How determine the centre of suspension for the link?

104. What is the curve in which the upper end of the hanger must move?

105. Explain the method of drawing the valve-diagram.

106. What data must be given in designing a Gooch motion? Explain in full.

PROBLEMS.

41. Draw the Zeuner diagram for the Gooch motion, having $\delta = 20°$, $r = 2\frac{3}{8}$ inches, $2c = 12$ inches, $g = 48$ inches, lap $= \frac{7}{8}$ inch, stroke $= 18$ inches, connecting-rod $45''$. Determine the point of cut-off for $u = 0$, 2, 4, and 6 inches on both strokes.

42. If in the above problem the radius of the link is 36 inches, the hanger is attached 10 inches from the arc and is 18 inches long, and the arm of the tumbling-shaft is 24 inches, the centre being $17\frac{3}{4}$ inches below the centre-line of the engine and 82 inches from the shaft, draw the motion when $\omega = 40°$, $u = 4$ inches.

43. What must be the radius of the link, if the cut-off is to be exactly the same on both ends, for $u = 6$ inches?

44. Replace the link-motion of Problem 40 with a Gooch motion cutting off at .8 stroke on both ends, using such other data of Problems 40 and 27 as are required, but making the valve-stem not less than 20 inches long.

45. Taking the data given in Problems 42 and 43, show the errors of the Zeuner diagram for $u = 4$ and $u = -6$ inches.

CHAPTER XI.

THE ALLEN AND FINK MOTIONS.

72. The Allen Link-motion is represented in Fig. 50, in which *ab* is the crank, *ac* and *ad* the eccentrics, *de* and *cf* the eccentric-rods. The link *fe* is a straight one, supported at

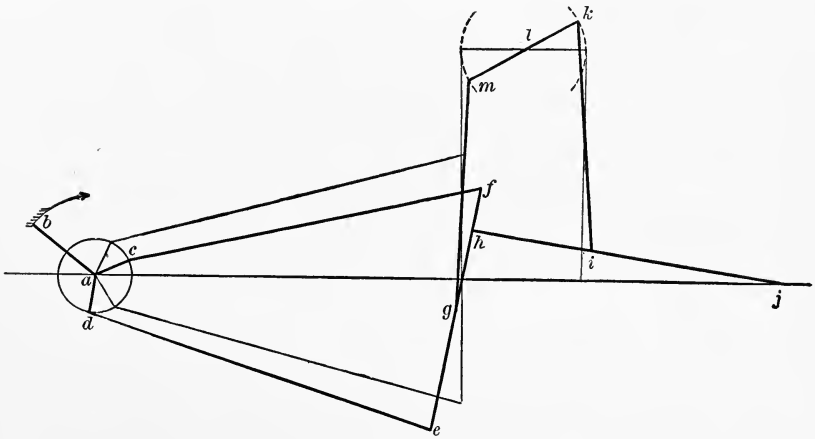

FIG. 50.

its centre *g* by the hanger *mg*, which is attached to one end of a rocker-arm *mlk* turning around *l*. *hj* is the radius-rod supported by the hanger *ki*, the upper end of which is attached at *k* to the other end of the rocker *mlk*. By turning *mlk* about its centre *l*, the link is lowered at the same time that the radius-rod is raised.

73. The Valve-diagram.—The diagram for the valve-motion is the circle, as in the case of the other links that we

have dealt with. The movement of the valve can be determined in the same way, and is

$$x = r\left(\sin\delta + \frac{c^2 - uu_1}{cg}\cos\delta\right)\cos\omega + \frac{ur}{c}\left(\cos\delta - \frac{c(u-u_1)}{ug}\sin\delta\right)\sin\omega,$$

in which u is the distance the link has moved downwards from aj, while u_1 is the distance the end of the radius-rod has moved upwards.

The hangers ki and mg should be of equal length, and as long as possible. mk should be equal to hi. The ratio of the parts ml and lk is given by the equation

$$\frac{lk}{lm} = \frac{ij}{de}\left(1 + \sqrt{1 + \frac{de}{hj}}\right);$$

and as $lm + lk = mi$, from the two equations the value of lk and lm can be found.

The position of l can be found by laying off along aj a distance

$$g - \frac{c^2}{2g} + ml,$$

and at right angles to aj a distance equal to mg the length of the hanger. To draw the valve-diagram for any value of u, the coördinates of the centre of the circle are

$$\frac{A}{2} = \frac{r}{2}\left(\sin\delta + \frac{c^2 - uu_1}{cg}\cos\delta\right)$$

and

$$\frac{B}{2} = \frac{ur}{2c}\left(\cos\delta - \frac{c(u-u_1)}{gu}\sin\delta\right).$$

For any value of u, the corresponding value of u_1 is

$$u_1 = \frac{u}{1 + \frac{hj \times lk}{ji \times lm}}.$$

The motion is but seldom used in this country, and it is unnecessary to go further into the details.

74. The Fink Motion.—The Fink motion is represented in Fig. 51, in which R is the crank, od the eccentric directly opposite, the travel of the piston being supposed to be along ob_0. dj is the eccentric-rod, rigidly connected at j to the link cc'. The point p' of the eccentric-rod is constrained to move in the line ob_0, or very nearly so, by the suspension-rod $p'g$ attached to a fixed point on the engine-frame at g. mb' is the radius-rod, the end m sliding up and down in the link, while the end b' is attached to the end of the valve-stem $b'b_0$. The radius-rod is moved in the link by means of the suspension-rod et, the lower end e of which is moved in a suitable curve. If the crank is on a dead-point, the point j would be on ob_0, and nm would be vertical.

75. Radius of Link.—As it is desired that the engine should have constant lead whatever the position of the radius-rod, if the valve does not change its position the radius of the link must be mb', and this is what it is generally made. An examination of the figure will show that, when the engine is on one dead-point, the distance from the centre of the shaft to the centre of the valve is

$$od + dj + mb' + b'b_0 = r + (a + b) + g_1 + g_2,$$

and when the engine is on the other centre the distance from o to b_0 is

$$-od + dj + mb' + b'b_0 = -r + (a + b) + g_1 + g_2.$$

That the lead may be equal for both ends of the cylinder with a common **D** valve, the distance from the centre of the shaft to the centre of the exhaust-port should be the mean of the two values of ob_0 above found, or

$$a + b + g_1 + g_2.$$

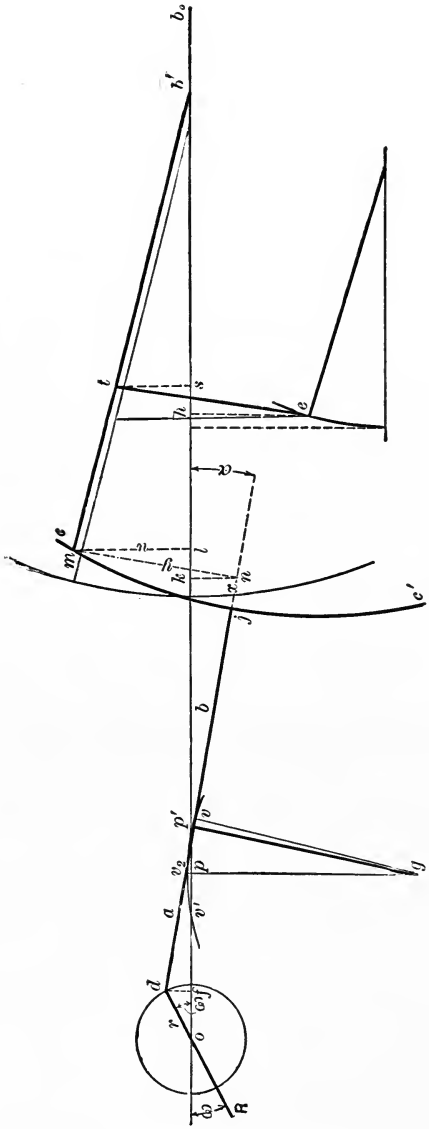

FIG. 51.

76. Suspension of Link.—The coördinates of the point g can readily be determined. On one dead-point

$$ov = od + dp' = r + a,$$

and on the other dead-point

$$ov' = -od + dp = -r + a,$$

and as gp' should swing equally on either side of pg, op should be the mean of these values of ov or a. To determine the point g, lay off from p the distances $pv = pv' = r$. Draw an arc vv_2v' with the desired value of pg as a radius. Bisect the distance pv_2 at p_1 (not shown); then the point p_1 should be on one point in the arc, and laying off $p_1g =$ the desired value of gp' gives g the centre of motion. By calculation,

$$v_2p = p'g \operatorname{vers}\left(\sin^{-1}\frac{r}{p'g}\right)$$

and

$$pg = p'g\left[1 - \tfrac{1}{2}\operatorname{vers}\left(\sin^{-1}\frac{r}{p'g}\right)\right].$$

Too great care cannot be taken in laying down this gear, as the approximation to the movement of the valve is much more crude in this case than in any that have preceded it.

77. Movement of the Valve.—From the figure

$$ob_0 = of + fp' + p'k + kl + lb' + b'b_0,$$

$$of = r\cos\omega, \quad fp' = a\cos\alpha, \quad p'k = (b + x)\cos\alpha,$$

$$kl = y\sin\alpha, \quad lb' = \sqrt{g_1^2 - u^2}, \quad b'b_0 = g_2,$$

and

$$ob_0 = r\cos\omega + a\cos\alpha + (b + x)\cos\alpha + y\sin\alpha + \sqrt{g_1^2 - u^2} + g_2.$$

From the figure also

$$y \cos \alpha = u + (b + x) \sin \alpha,$$

or

$$y = \frac{u + (b + x) \sin \alpha}{\cos \alpha}, \qquad y \sin \alpha = \frac{u \sin \alpha + (b + x) \sin^2 \alpha}{\cos \alpha},$$

and

$$(b + x) \cos \alpha + y \sin \alpha = \frac{b + u \sin \alpha + x}{\cos \alpha}.$$

For $\sqrt{g_1^2 - u^2}$ we may put $g_1 - \frac{u^2}{2g_1}$, and making all the substitutions in ob_0, we have

$$ob_0 = r \cos \omega + a \cos \alpha + \frac{b + u \sin \alpha}{\cos \alpha} + \frac{x}{\cos \alpha} + g_1 + g_2 - \frac{u^2}{2g_1}.$$

As cjc' is an arc of radius g_1, approximately $y^2 = 2g_1 x$, $r \sin \omega = a \sin \alpha$.

We have seen above that

$$y = \frac{u + (b + x) \sin \alpha}{\cos \alpha};$$

and as $x \sin \alpha$ is small, we can make

$$y = \frac{u + b \sin \alpha}{\cos \alpha} \quad \text{and} \quad x = \frac{y^2}{2g_1} = \frac{(u + b \sin \alpha)^2}{2g_1 \cos^2 \alpha};$$

or

$$ob_0 = r \cos \omega + a \cos \alpha + \frac{b + u \sin \alpha}{\cos \alpha} + \frac{(u + b \sin \alpha)^2}{2g_1 \cos^3 \alpha} + g_1 + g_2 - \frac{u^2}{2g_1}.$$

We have above $r \sin \omega = a \sin \alpha$ and $\sin \alpha = \frac{r}{a} \sin \omega$,

$$\cos \alpha = \sqrt{1 - \frac{r^2}{a^2} \sin^2 \omega} = 1 - \frac{r^2}{2a^2} \sin^2 \omega, \quad \frac{1}{\cos \alpha} = 1 + \frac{r^2}{2a^2} \sin^2 \omega,$$

and

$$\frac{1}{\cos^3 \alpha} = 1 + \frac{3r^2}{2a^2} \sin^2 \omega,$$

and

$$ob_0 = r \cos \omega + \left(\frac{ur}{a} + \frac{ubr}{ag_1}\right) \sin \omega + \frac{r^2}{2a^2}\left(b + \frac{b^2}{g_1} + \frac{3u^2}{2g_1} - a\right) \sin^2 \omega + a + b + g_1 + g_2,$$

after collecting the terms. Now the movement of the valve for any value of ω is the distance the valve has moved from its central position.

We have already seen that the central position is at

$$ob_0 = a + b + g_1 + g_2;$$

the movement of the valve is therefore the difference of the last two equations, or

$$x = r \cos \omega + \frac{ur}{a}\left(1 + \frac{b}{g_1}\right) \sin \omega + \frac{r^2}{2a^2}\left(b + \frac{b^2}{g_1} + \frac{3u^2}{2g_1} - a\right) \sin^2 \omega. \quad (A)$$

The last term in this equation is generally small, and may be omitted; and then

$$x = r \cos \omega + \frac{ur}{a}\left(1 + \frac{b}{g_1}\right) \sin \omega,$$

which represents the movement of the valve for any value of u and ω.

78. The Valve-diagram.—The coördinates of the centre of the valve-circle are $\frac{r}{2}$ and $\frac{ur}{2a}\left(1 + \frac{b}{g_1}\right)$; so that if we have the data of the gear given, the point of cut-off, admission, lead, etc., can be determined from a diagram such as Fig. 52, which represents the valve-diagrams for four values of u. Evidently, if $u = 0$, the diameter of the valve-circle is r, or

the lap plus the lead equals the throw of the eccentric. An examination of the first value of x deduced (A), shows that the last term is less the greater the value of a and the

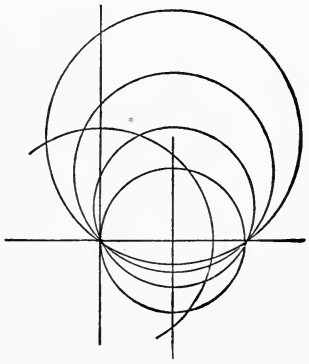

FIG. 52.

smaller the value of b. Generally, b is made very small, oftentimes zero, or the point p' in Fig. 51 is attached directly to j. When this is the case,

$$x = r \cos \omega + \frac{ur}{a} \sin \omega.$$

79. Radius-rod at a Fixed Point in the Link.—We have supposed in our deduction that u is kept constant, that is, that the end of the radius-rod moves in the link. If we had supposed that y was constant and that u changed, we would have found that the same equation would give the movement of the valve, putting y in the place of u.

80. Hanger for Radius-rod.—To determine the point of suspension of the hanger for the radius-rod. Referring to Fig. 51, and calling $tb' = g_0$, we have

$$b's = \sqrt{g_0^2 - ts^2}.$$

But $ts = \frac{ug_0}{g_1}$; consequently

$$b's = \sqrt{g_0^2 - \frac{u^2 g_0^2}{g_1^2}} = g_0 \left(1 - \frac{u^2}{2g_1^2}\right).$$

We have already seen that from o to the centre of the port is $a + b + g_1 + g_2$; consequently the position of s when the valve is at the middle of its travel is

$$a + b + g_1 + g_2 - g_2 - g_0 + \frac{g_0 u^2}{2g_1^2} = a + b + g_1 - g_0 + \frac{g_0 u^2}{2g_1^2};$$

and as the suspension-rod should be vertical for this point, for the centre of its movement

$$oh = a + b + g_1 - g_0 + \frac{g_0 u^2}{2g_1^2},$$

and

$$he = et - st = h - \frac{g_0}{g_1} u,$$

when h = length of suspension-rod. If we call $y = oh$ and $y_0 = oh = a + b + g_1 - g_0$ for $u = o$, and $z = he$ and $z_0 = he = h$ for $u = o$, we have

$$y - y_0 = \frac{g_0 u^2}{2g_1^2},$$

and

$$z_0 - z = \frac{g_0 u}{g_1};$$

or eliminating u, we have

$$(z_0 - z)^2 = 2g_0 (y - y_0).$$

This equation is that of a parabola having a parameter of $2g_0$, or the lower end e of the suspension-rod should move in a parabola as the radius-rod is raised or lowered. As this is practically impossible, the parabola can be replaced by a circular arc of radius g_0, the vertex of the arc being below the line ob_0 a distance h, and to the right of o a distance $a + b + g_1 - g_0$.

81. Setting the Eccentric.—In setting the eccentric, as in the case of all other link-motions, the crank should be put on the dead-point, and the eccentric should be put so that

the valve is in the middle of its stroke. The eccentric should then be moved a distance equal to the angular advance, in this case 90°, and secured in this position. The crank and eccentric now occupy their proper relative positions.

82. Designing.—The practical designing of a gear of this kind is largely a matter of experiment. It could be done in this way. First determine or assume the greatest point of cut-off desired and the amount of lead or angular lead. Draw the valve-circle for $u =$ its greatest value. This will determine the amount of lap. Assume that $b = o$. Take from the distance between the centre of the shaft and the centre of the exhaust-port the length of the valve-stem. The remainder is $a + g_1$. Now g_1 should be as long as possible, and ordinarily a must be of considerable length, that the link may clear the shaft.

It will be found that as a increases the value of c increases also; but in our demonstration the value of c is small in proportion to g_1, so that it is difficult to decide as to the proportions of a and g_1, and the only directions possible are to make a as short and g_1 as long as possible. We will suppose, however, that they are determined. From the centre of the valve-circle as drawn we measure the distance to the horizontal axis of the figure. This distance is $\frac{ur}{a}$. The value of r is, as said before, the lap plus the lead, so that we have the value of $\frac{u}{a}$. But as this is the greatest cut-off, we have $\frac{c}{a}$; and having the value of a determined as above, the value of c can be fixed. The lengths of the suspension-rods should be as great as possible, and are generally determined from the details of the framing of the engine, or other details having nothing to do with the valve-motion proper.

83. The Porter-Allen Motion.—The only application of the Fink motion commonly found in the United States is the Porter-Allen motion, a sketch of which is given in Fig. 53. In this figure aw is the centre-line of the engine. ab' is the

crank in one position, and *ac* is the corresponding position of the eccentric. *c b* is the eccentric-rod rigidly attached to the link *bg'*. The point *b* is attached by the rod *be* to a fixed point *e* on the frame. *h'i'* is the radius-rod which moves the steam-valves.

There are two of these steam-valves, one for each end of the cylinder, as shown in Fig. 22. The valve-stems are joined by the rods *u'l'* and *v'k'* to the arms *jl'* and *jk'* of a rocking-shaft *j*, a third arm *ji'* being attached to the end *i'* of the steam radius-rod. The end *h'* is movable in the slot of the link, being carried by the hanger *m'n'*, which is attached at *n'* to a bell-crank lever *n'op'* pivoted at *o*, the end *p'* being moved by the governor.

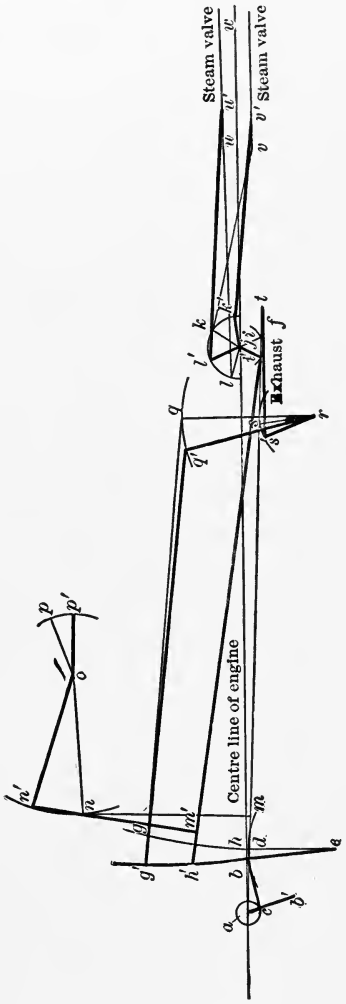

FIG. 53.

The speed of the engine is kept constant by the movement of the steam-rod which regulates the cut-off, and thus the supply of steam to the cylinder. The rod *g'q'* is the exhaust-rod, and is attached permanently to one point of the link *g'*, and moves the exhaust-valves, of which there are two on the same stem, through the bell-crank *q'rs'*, pivoted at *r*, and the rod *s't*, which is connected at *t* to the valve-stem. In this gear the radius of the link is slightly more

than the length of the steam radius-rod. The effect of this is that as the radius-rod is lowered or approaches the centre of the link the lead on one end is decreased and the other end is increased.

It will be noticed that in this figure the crank and eccentric are nearly on the same line, as a reverse lever is used in moving the valve. That they are not exactly together is due to the fact that the end i'' of the steam radius-rod $h'i''$ does not move in the line aw, but along the line af, which is drawn through the middle of the arc in which i'' moves. The use of the two driving arms on the rock-shaft j is to cause the valves to move as fast as possible when opening and closing the ports, and the arms are so arranged that l'' is moving at its fastest rate in the direction $l'u'$ when the front valve is opening or closing, and k' is arranged similarly for the back valve.

As a first approximation the Zeuner diagram is close enough for practical work, but for exact work with any Fink motion the valve-motion should be laid down full size, to determine the actual points of admission and cut-off. The advantage of the Fink gear is its simplicity, and its disadvantage is that the cut-off in the two ends of the cylinder may vary greatly, as the variation of the actual diagram for the Zeuner diagram is greatest about the point of cut-off. The dimensions taken in the Porter-Allen engine are such that the cut-off points are practically symmetrical up to half-strokes at the expense of unequal leads.

QUESTIONS.

107. Sketch an Allen link, and explain how it works.

108. Deduce the equation to the movement of the valve.

109. Is the lead with the Allen link constant or variable?

110. Sketch a Fink motion, and explain how it works.

111. What should be the radius of the link, and why?

112. What is the distance from the centre of the shaft to the centre of the exhaust-port?

113. How determine the point of suspension of the link?

114. Deduce the equation for the movement of the valve.

115. Explain the method of drawing the valve-diagram.

116. If the radius-rod is secured at one point in the link, what is the value of x?

117. How determine the curve in which the end of the hanger moves?

118. How should the eccentric be set?

119. Explain the method of designing a Fink motion.

120. Sketch and explain the Porter-Allen motion.

121. Why is the eccentric set as shown?

122. What is the result of changing the radius of the link?

PROBLEMS.

46. In a Fink motion $r = 1$ inch, $a = 6$ inches, $b = 0$, $c =$ 10 inches, radius-rod 40 inches, draw the valve-diagram for $u = 4$, 8, and 10 inches. The crank being 20 inches and the connecting-rod 50, where is the point of cut-off on both strokes for each value of u, the lead for $u = 10$ being $\frac{1}{10}$ inch?

47. Replace the Stephenson's link of problem 40 by a Fink motion which will give equal cut-off at .5 stroke, making $b = 0$ and $a = 4\frac{3}{4}$ inches.

CHAPTER XII.

SHAFT REGULATION.

84. Throttling Governors.—With a single eccentric connected directly to a common slide-valve the point of cut-off is fixed. If the steam-pressure is constant, the amount of work done by an engine of this kind will vary directly with the number of revolutions. The speed of the engine would be consequently varying with the load. To overcome this, some device must be used to keep the speed constant. With the single eccentric and ordinary slide-valve, the pressure of the steam must be modified to suit the work to be done. This is usually accomplished by means of some form of throttling governor.

It is generally believed, and is often correct, that the use of the throttling governor is less economical than some method of governing which regulates the time during which steam is admitted to the cylinder, or in other words regulates the point of cut-off. There are many types of these governors, one of which, the Porter-Allen, acts by moving the radius-rod in the link, and thus alters the point of cut-off.

85. Changing Angular Advance.—An examination of Fig. 54 shows that if we can change the angle of advance of the eccentric we also change the cut-off, or the engine would be self-regulating to a certain extent. But the lead would also change in a manner not at all desirable. As lead is only given that the piston may feel the full pressure of the steam at the beginning of the stroke, too much lead would tend to stop the engine before it reaches the dead-point, and too little would make the piston move under less than the full pressure through part of the stroke, the consequence

being that the engine would be doing less work than it is capable of doing.

86. Changing the Eccentricity.—If we change the throw of the eccentric, leaving the angle of advance unchanged, we would find the same trouble, but in the opposite direc-

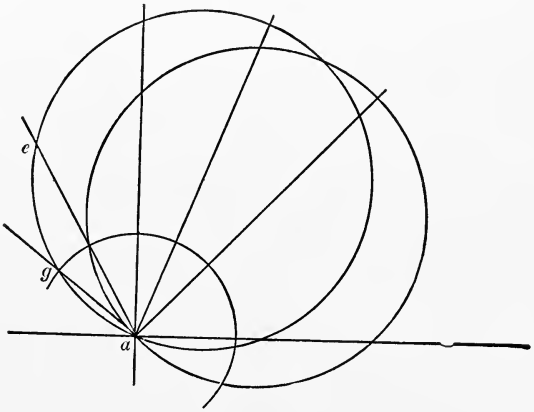

FIG. 54.

tion. That is, when the angle of advance only is changed, decreased cut-off means more lead. When the eccentricity only is changed, increased cut-off means more lead.

87. Changing Eccentricity and Angular Advance.—A combination should give variable cut-off with constant lead. All the single-valve automatic engines attempt to produce this effect.

In Fig. 55, if *ab* is the crank and *ac* the eccentric when the cut-off is greatest, it is evident that *gac* is the angle of advance. If now the eccentric-sheave be made so that, without changing the position of the crank, it can be moved vertically downwards, the slot allowing the sheave to move, when the point *c* reaches *d* the angle of advance has increased to *gad*, and the eccentricity has become *ad*. The positions *ac* and *ad* are the extreme positions possible, and the cut-off can vary between the limits set by these eccentric positions. Now, if when the engine cuts off shortest

the power developed is not sufficient to run the engine unloaded, the engine will regulate between a full load and

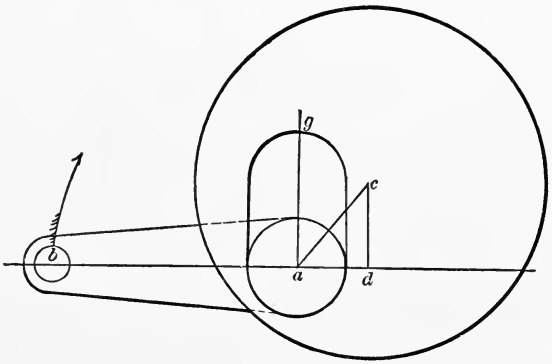

FIG. 55.

unloaded if proper mechanism is used to move the eccentric, as shown in Fig. 55.

88. Erie Governor.—Many devices are used to accomplish this purpose, one of the simplest being that shown in Fig. 56, which represents the governor used on the engines built by the Erie City Iron Works. The shaft carries, permanently attached to it, a frame *cc*, to which the weights

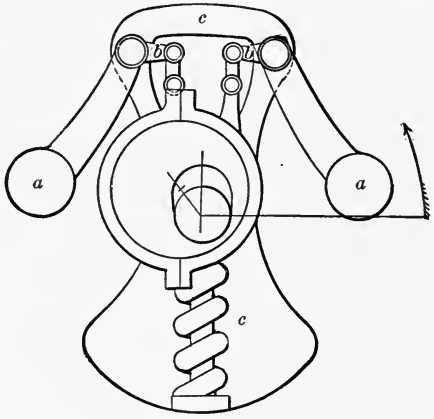

FIG. 56.

a and *a* are attached. Connected to these weights by the bell-crank arms *bb* is the eccentric-sheave, which is slotted

UNIV. OF CALIFORNIA

as shown in Fig. 55. As the speed of the engine increases above the normal, the balls fly out, the eccentric moves across the shaft, the angle of the advance is increased the throw of the eccentric is diminished, and the cut-off is earlier. The spring at the bottom of the figure is to bring the eccentric back to its position of greatest throw when the speed decreases or the engine is stopped. The valve used is the ordinary piston-valve directly connected with the eccentric-rod.

89. Armington and Sims.—Another method of producing the same result is that used by the makers of the Armington and Sims engine. The apparatus used is more complicated and the results are no better as far as the valve-motion is concerned. [This discussion does not deal with the adaptability of any of these arrangements for quick governing, nor their mechanical excellence, but simply with the effect of changing the governor position on the valve.] Fig. 57 represents this governor in two positions: one, *A*, showing its position when the valve has its least travel; and one, *B*, with the greatest travel. In the figure will be seen practically two eccentrics, the inner one, *s*, loose on the shaft, the outer one, *p*, being loose on the inner one. The inner one carries two ears, *f* and *h*, which are attached by links *fe* and *hb* to the weights *de* and *ac*.

The outer eccentric, *p*, is attached to one weight *ac* by the link *cg* attached at *g*. The fly-wheel is keyed to the shaft, and to the arms at *a* and *d* are pivoted the weights of the governor. *B* represents the governor when the engine is stopped, the combined eccentrics having their greatest throw. *oj* is the position of the crank with respect to the entire arrangement. The engine turns in the direction of the arrow. The valve is a piston-valve, as shown in Fig. 21; but steam is taken inside and the exhaust is on the outer side of the valve. The throw of the eccentric should therefore be in the same position as though an ordinary D-valve was used, moved through a reverse-lever. As the speed of the engine increases, the weights move out and the eccentrics

change position, so that when they occupy the position shown in *A* the valve has its least travel and the cut-off is shortest.

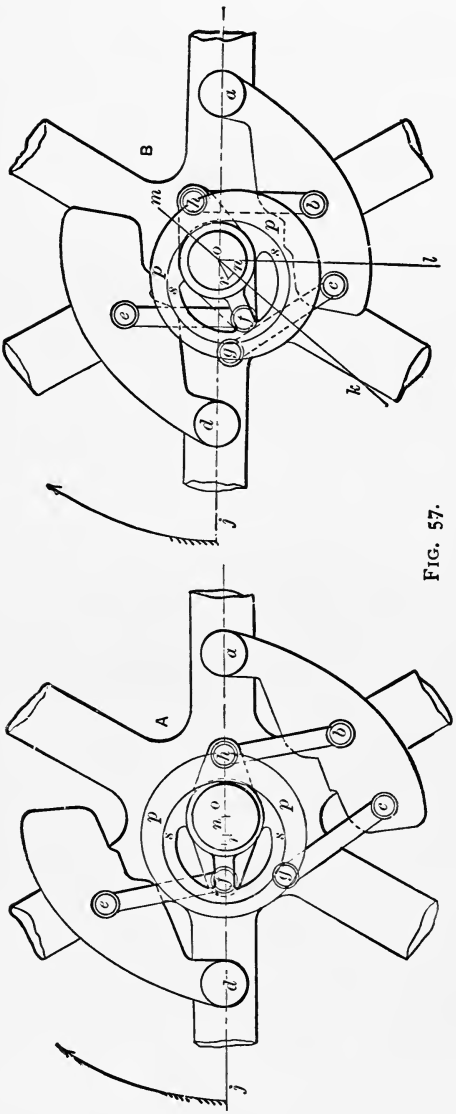

FIG. 57.

The line diagram shown in Fig. 58 will show how the change in travel and angular advance is effected. *a* is the centre of the shaft and *ag* the fixed distance from the centre of the shaft to the centre of the joint carrying the weight *abc* of Fig. 57, which weight is represented by the lines *gfe* in Fig. 58. *ab* is the eccentricity of the inner eccentric; *ha* is a continuation of this line, and *hf* is a link connecting the point *h* to the weight *gfe*; *bc* is the eccentricity of the outer eccentric; *db* is connected at a fixed angle to *bc*, and *d* and *e* are connected by the link *dc*.

As the speed of the engine increases *efg* moves around *g* away from *ag*, *h* approaches *ag*, as does *b*. At the same time *d* is drawn downwards and *c* moves still closer to

ag, until when at its greatest speed *c* is on *ag* produced, and the valve has its least travel.

It is evident that, for any position of the arrangement, *ac* is the throw of the combined eccentrics, and the angle *kac* is the angle of advance. In order that the lead may be constant, the point *c* should move at right angles to *ag* as the speed changes. The figure represents the parts at their greatest and least cut-off.

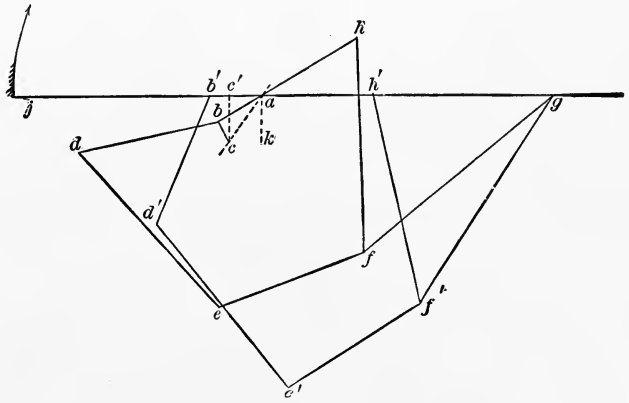

FIG. 58.

90. Ball.—The cut-off effected by the Ball engine regulator is practically the same as in the two engines just described. Fig. 59 represents the regulator. The fly-wheel hub *p* is keyed to the shaft *a*. The outer end of the hub carries an eccentric *b* secured by the four bolts *q*, *q*. *c* is the eccentric-strap which carries the plate *d*, to which is attached a pin *e* which drives the eccentric-rod. To two opposite arms of the fly-wheel at *f*, *f* the weights *j*, *j* are pivoted, each of which is connected to the eccentric-strap *c* by the rods *k*, *k*. On the line *ss* springs are attached to the arm carrying the weights and to the rim of the fly-wheel, which act against the centrifugal force tending to force the weights *j*, *j* outward. An auxiliary spring connects *m* with the piston of the dash-pot shown at *o*. As the speed of the engine increases above the normal the weights *j*, *j* move outward

and turn the strap *c* on the eccentric, causing the pin *e* to travel in an arc about *v*, the centre of the eccentric. This

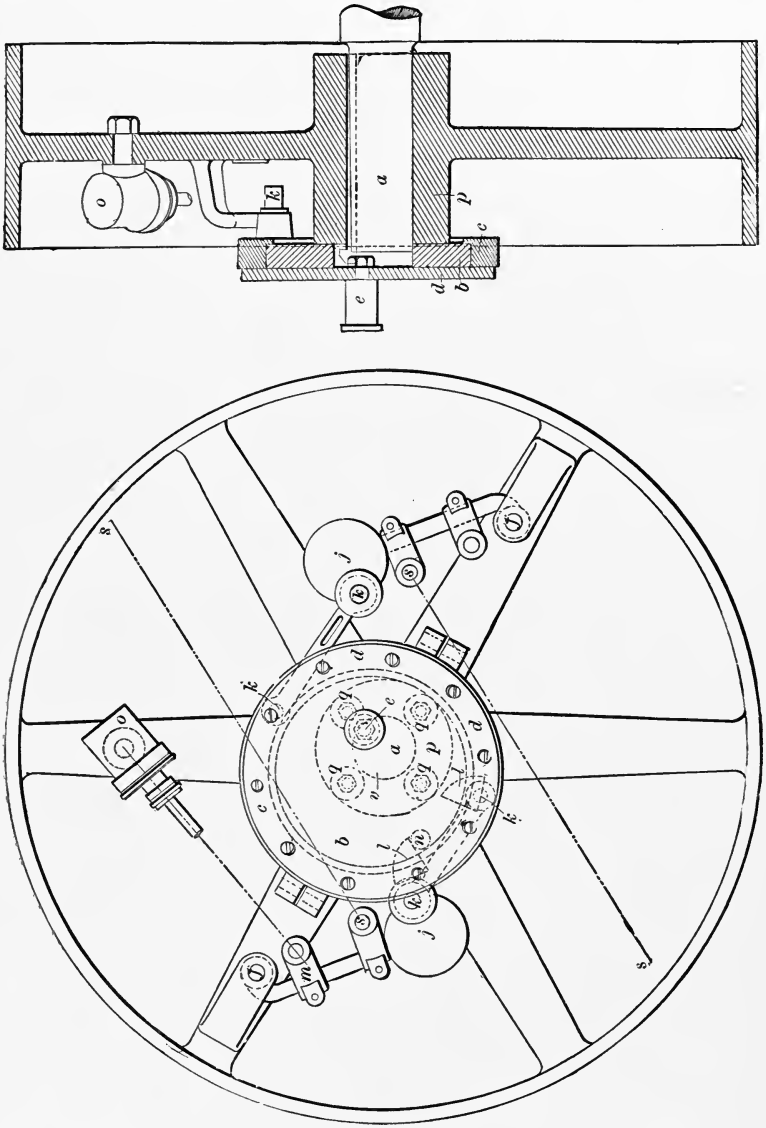

FIG. 59.

varies the distance from *e* to *o*, or the eccentricity, and also varies the angular advance. In the two regulators before described, the eccentric moved at right angles to the crank. In this case the eccentric moves about a fixed point *v*, and the change in distribution of steam is practically the same that takes place in a Stephenson's link with open rods. The valve in the Ball engine takes steam inside, so that the eccentric should follow the crank by an angle equal to 90° less the angle of advance. The lead therefore becomes greater as the cut-off is shorter, and the point *v* must be so chosen that the lead is sufficient when loaded, and not excessive when running light.

91. The Valve used on this engine is different from any of those of which sketches have been given. The valve is on the side of the cylinder, and Fig. 60 shows a vertical

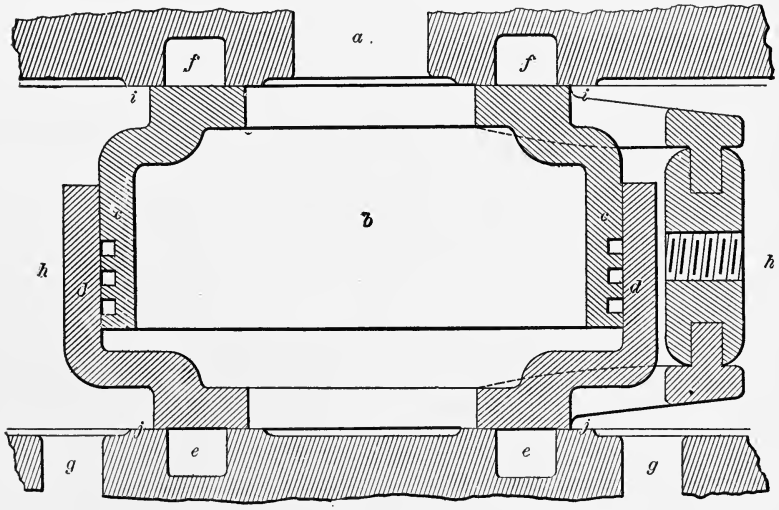

FIG. 60.

section through the valve and ports. Steam passes from the steam-pipe *a* into the interior *b* of the valve. The valve consists of the parts *c* and *d*, which slide freely in each other, but without allowing steam to escape into the space *h*. The upper and lower end of the pieces *c* and *d*, *ii* and *jj*, are ex-

tended to make the valve-face covering the rectangular ports *f*, *f*, *e*, and *e*. These ports lead horizontally into the cylinder, and the valve is double-ported. Exhaust takes place outside the valve into the space *h*, and then through the ports *g*, *g* in the bottom of the chest to the exhaust-pipe. The area exposed to the steam-pressure is only enough to insure the valve remaining on its seat.

QUESTIONS.

123. How is the speed of an engine regulated when a plain slide-valve driven by a single eccentric is used?

124. How is the speed regulated in the Porter-Allen engine?

125. Is it feasible to regulate the cut-off by changing the angular advance only? Why?

126. How can the cut-off be regulated by changing both the angular advance and the eccentricity?

127. What is the mechanism used on the Erie engine? Is the variable cut-off the same as would be obtained by a Stephenson's link?

128. How is the cut-off varied on the Armington and Sims engine, and what link-motion would give the same variation?

129. Describe the valve used on the Ball engine, and the apparatus used for changing the point of cut-off.

130. What link-motion is the equivalent of the Ball motion?

PROBLEMS.

48. Given stroke 24 inches, connecting-rod 60 inches, maximum cut-off at $\frac{5}{8}$ stroke, lead $\frac{1}{4}$ inch, port-opening $1\frac{1}{4}$ inches. What must be the movement of the eccentric to vary the cut-off from $\frac{3}{16}$ to $\frac{5}{8}$ stroke?

49. Given the lap $\frac{1}{2}$ inch, lead $\frac{3}{32}$ inch, the cut-off to vary from $\frac{1}{4}$ to $\frac{3}{4}$ stroke. What should be the movement of the eccentric?

CHAPTER XIII.

RADIAL GEARS—HACKWORTH'S.

92. Radial Gears.—There is another class of valve-gears which are used either for reversing or for changing the point of cut-off, which we will now take up, and which are called radial gears. A radial valve-gear is one in which the motion of the valve is taken from some point in a vibrating link, a second point of which moves in a closed curve, while a third point moves in a straight line or open curve. A subdivision might be made of simple and compound gears, a gear being simple when the closed curve is a circle, while in a compound gear the closed curve is described by a point on a second vibrating link moving according to a similar law, and whose motion may be either simple or compound.

93. Hackworth's Gear.—Hackworth's gear is the oldest and simplest radial gear, and Fig. 61 gives a line diagram

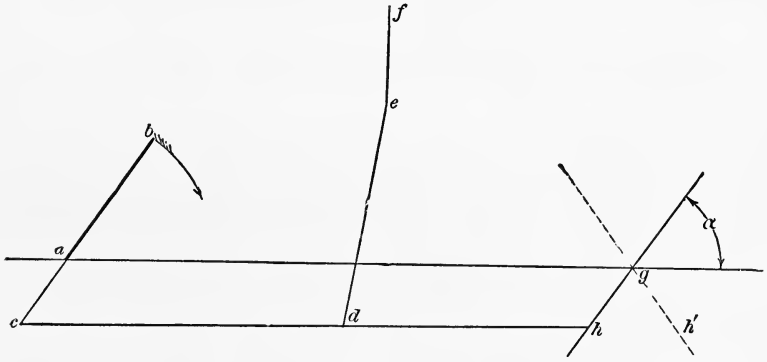

FIG. 61.

of this motion. *ab* is the crank; *ac* is the eccentric set 180° in advance of the crank; *fe* is the valve-stem, and *de* the

valve connecting-rod; *ch* is the vibrating-piece, from the point *d* of which motion is taken. One end *c* moves in the closed curve of the eccentric-circle, while the other end *h* moves in a straight line *hg*, whose direction is determined by the angle of inclination α which *hg* makes with the line of centres *ag*. When the piece *hg* occupies the position shown, an ordinary D-slide taking steam outside being used, the engine turns in the direction of the arrow, and when it is in the position *h'g* the engine turns in the opposite direction.

94. Constant Lead.—In Fig. 62, when the crank is on either dead-point *a* or *b*, the eccentric being 180° in advance, the length of the eccentric-rod *bc* or *ac* is such that the point *c* coincides with the centre on which *ie* turns. Then as the

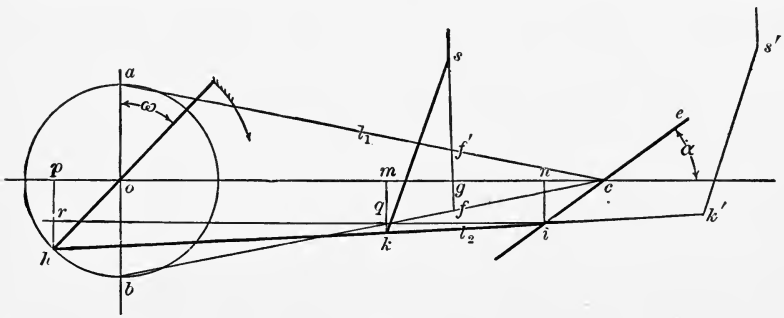

FIG. 62.

valve-rod is attached at *f*, the distance $fg = f'g =$ lap plus lead, and is constant for both ends of the cylinder, during both forward and backward motions, and for all grades of expansion.

95. Movement of the Valve.—Suppose the crank to have moved through the angle ω, then the eccentric has moved to the position *oh* and the point *c* to *i* and *f* to *k*. Draw the lines *in*, *km*, and *hp* at right angles to *oc*, and *ir* parallel to *oc*. Then *km* is the movement of the valve if the angularity of the valve-rod *ks* is neglected. Let $bc = ac = hi = l_1$, $fc = ki = l_2$. Call $ico = \alpha$, $km = x$, and $oh = r$. Then

$$x = km = kq + qm = kq + in,$$

But

$$kq = \frac{l_2}{l_1} rh.$$

Now $cn = op = r \sin \omega$ approximately, and $in = cn \tan \alpha = r \sin \omega \tan \alpha$, and $rh = hp - in = r \cos \omega - r \sin \omega \tan \alpha$; or substituting, we have

$$kq = \frac{l_2}{l_1}(r \cos \omega - r \sin \omega \tan \alpha)$$

and

$$x = \frac{l_2}{l_1}(r \cos \omega - r \sin \omega \tan \alpha) + r \sin \omega \tan \alpha;$$

or

$$\begin{aligned} x &= \frac{l_2}{l_1} r \cos \omega + \sin \omega \left(r \tan \alpha - \frac{l_2}{l_1} r \tan \alpha\right) \\ &= \frac{l_2}{l_1} r \cos \omega + r\left(\frac{l_1 - l_2}{l_1} \tan \alpha\right) \sin \omega \\ &= A \cos \omega + B \sin \omega, \end{aligned}$$

which is the equation to the Zeuner diagram in which

$$A = \frac{l_2}{l_1} r \quad \text{and} \quad B = r\left(\frac{l_1 - l_2}{l_1}\right) \tan \alpha.$$

96. The Valve-diagram.—As most engines to which

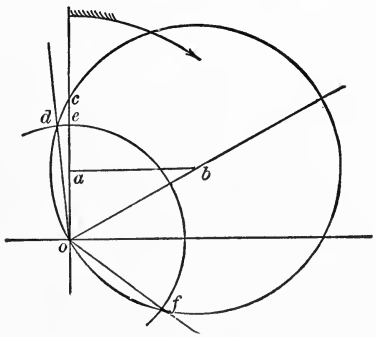

FIG. 63.

these gears are applied are vertical, the diagrams are drawn as though one dead-point was at the top of the figure and

one at the bottom. In Fig. 63 is drawn the diagram for this motion, in which

$$oa = \frac{l_2 r}{2l_1} \quad \text{and} \quad ab = \frac{r}{2}\left(\frac{l_1 - l_2}{l_1}\right) \tan \alpha.$$

From these equations we see that whatever the value of α, the centre of the valve-circle is on the line ab. Now

$$\tan aob = \frac{ab}{oa} = \frac{l_1 - l_2}{l_2} \tan \alpha;$$

or as oba would be the equivalent of the angle of advance of a single eccentric, to produce the same distribution of steam

$$\tan \delta = \frac{l_2}{(l_1 - l_2) \tan \alpha}.$$

For any value of α, therefore, the corresponding valve-circles can be drawn. With o as a centre and the lap od as a radius draw the lap-circle def. The port opens when the crank is at od, the lead is ec, and the cut-off takes place when the crank reaches of.

97. To Design the Gear.—To design a Hackworth motion, suppose we have l_1, l_2, the lap, and the lead given, to determine the value of r and of α for a given cut-off. In Fig. 64 draw oa and ch at right angles to each other. From o lay off oe = lap and ef = lead. Draw oi to represent the position of the crank at the point of cut-off. Draw the lap-circle ehi. The valve-circle must pass through f, o, and i. Finding the centre k, and drawing the circle, we have

$$of = \frac{l_2}{l_1} r \quad \text{or} \quad r = \frac{l_1 \times of}{l_2}$$

and

$$\tan fok = \frac{l_1 - l_2}{l_2} \tan \alpha \quad \text{or} \quad \tan \alpha = \frac{l_2 \tan fok}{l_1 - l_2},$$

which determine the other details of the gear.

98. Right-hand Rotation.—For convenience in dealing with the errors of this diagram we will use the term "right-hand rotation" to mean as follows: Assume the end of the

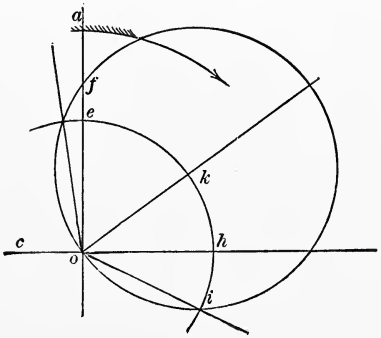

FIG. 64.

vibrating link, Figs. 61 and 62, which moves in a closed curve to be at your left, the end which moves in an open curve or straight line to be on your right, and the valve to be above the vibrating-link. Rotation in the direction of the movement of the hands of a watch will be called right-handed. Then in Figs. 61 and 62 movement in the direction of the arrows is right-hand rotation.

99. Errors of the Diagram.—If a diagram is drawn according to the formulæ deduced above, and a second diagram is made showing the actual position of the valve from a scale-drawing of the motion, it will be found that there is an error in the Zeuner diagram as applied to this gear. It will be found that the actual diagram approaches more nearly the theoretical for right-hand rotation, and if the diagram is laid down for different values of α, the smaller

this angle the less the errors of the diagram, and in designing a motion of this kind these points should be remembered.

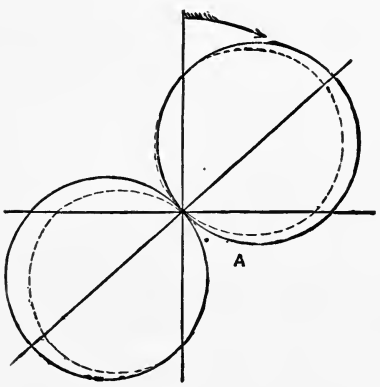

FIG. 65A.

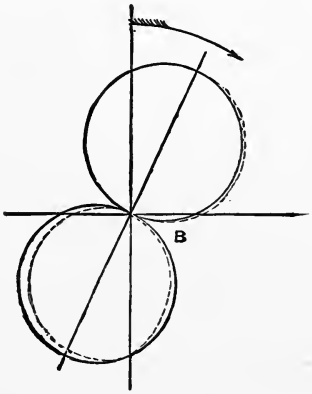

FIG. 65B.

Figs. 65 and 66 represent the Zeuner and actual diagrams for a motion of the same proportions as Fig. 62; Fig. 65A

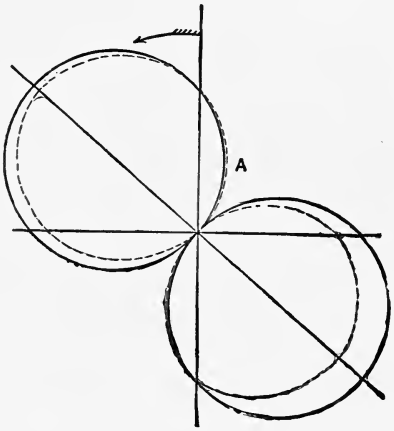

FIG. 66A.

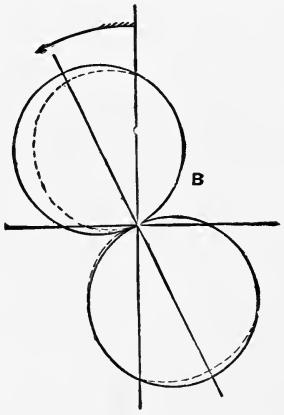

FIG. 66B.

being for right-hand rotation and tan $\alpha = .75$, and 65B being for right-hand rotation with tan $\alpha = .4$. Fig. 66 represents corresponding conditions with left-hand rotation.

100. Port-opening.—While there is a difference in the amount of port-opening and cut-off, with motion in either direction, for the two ends of a cylinder, the difference is greater with left-hand rotation, and might become serious in a badly designed gear.

101. Connecting up a Hackworth Gear.—In a horizontal engine advantage could be taken of this by making the more rapid valve-motion at that end of the cylinder at which, owing to the angularity of the connecting-rod, the more rapid motion of the piston itself occurs. In vertical engines designed to run left-handed it is well to introduce a rocker-arm, thus reversing the motion and giving the wider opening and retarded cut-off on the up-stroke. If desired, the eccentric can be changed 180°, or the swinging link attached to the crank directly. The point i would then travel on the part ce instead of ci, Fig. 62, if the engine turned in the same direction, and a rocker would have to be used or steam taken inside the valve.

102. Attaching Valve-stem outside.—Sometimes, instead of attaching the valve-rod at k between h and i, as in Fig. 62, it is attached at a point outside, as at k'. Our reasoning still holds good; but the l_2 now changes sign, and the equation to the movement of the valve is

$$x = \frac{l_2}{l_1} r \cos \omega + r\left(\frac{l_1 + l_2}{l_1}\right) \tan \alpha \sin \omega.$$

The sliding of the end i of the vibrating-link along the guide ie is liable to excessive friction as the angle α increases, and this led to the other types of simple radial gear.

103. Equalizing Port-opening.—By the use of an equalizing lever it is possible to make the port-opening on both ends of the cylinder the same for any given cut-off, and if desired the cut-off in the two ends of the cylinder can be made exactly equal.

Fig. 67 represents the path of that point of the radius-rod

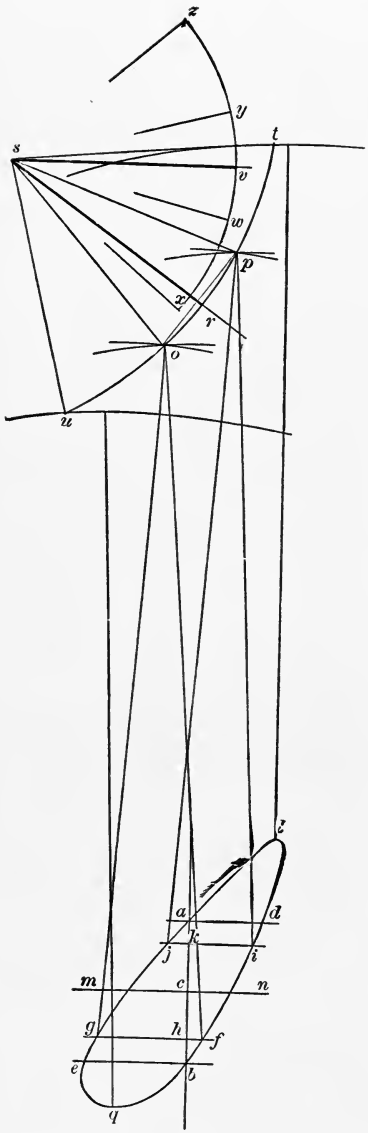

FIG. 67.

to which the valve-stem or valve connecting-rod is attached, for one value of α for which the port-opening is to be equalized. *a* and *b* are the positions corresponding to the dead-points; *ac* is therefore equal to *bc* or to the lap plus the lead, *mn* being the centre-line of the movement. Make $kc = ch =$ the lap. When the crank is in such a position that the end of the radius-rod is at *j*, the valve is just opening. At *i* the valve is just closing the same port. At *f* the valve is just opening to steam on the other end, and at *g* cut-off takes place.

With *g* and *f* as centres and the length of the valve connecting-rod, *ks* of Fig. 62, as a radius, describe arcs intersecting at *o*, and from *i* and *j* describe arcs intersecting at *p*. Bisect *op* by the line *rs*. With *l* and *q* the extreme positions, draw indefinite arcs *t* and *u* with the same radius. Select a point on *rs* as a centre, such that if an arc with *sp* as a radius is drawn, *pt* is equal to *ou*. Draw *sv* perpendicular to the direction of movement of the valve. *vsr* is then the angle which the arms of the equalizing lever should make with each other. The length of the arms should be such that

while the end of the arm *rs* travels from *o* to *p*, the end of the arm *sv* travels twice the lap.

104. Equalizing the Cut-off.—The cut-off can be equalized by determining the points *o* and *p* from the points actually occupied by the lower end of the valve connecting-rod when steam is admitted and cut-off at the required points instead of from the points *j* and *i* and *g* and *f*, as in the last article. While this method will make the port-opening and cut-off for one grade of expansion exactly equal, it will make them more nearly equal for all grades than if no equalizing lever is used.

QUESTIONS.

131. What are radial gears? and what is the distinction made between simple and compound gears?

132. Sketch and describe the Hackworth gear.

133. How does the lead vary with different values of α?

134. Deduce the equation to the movement of the valve, and show how to draw the valve-diagram for a vertical engine.

135. What data is required and how proceed to determine the other parts of the gear?

136. Explain the distinction made between right- and left-hand rotation. If the closed curve is on your right, the open curve on your left, and the valve below the vibrating-link, is motion with the hands of the watch right- or left-handed?

137. How does the port-opening vary with the Hackworth gear? and is the variation greater for right- or for left-hand rotation?

138. How should a horizontal engine be run with a Hackworth gear? A vertical? Why?

139. What effect has attaching the valve connecting-rod to an extension of the vibrating-link?

140. How can the port-opening be equalized?

141. How can the cut-off be equalized? and can it be done for several points of cut-off?

PROBLEMS.

50. Draw the Zeuner diagram for a Hackworth gear having $r = 2.5$ inches, $l_1 = 23\frac{1}{8}$ inches, $l_2 = -16\frac{5}{8}$ inches, $\alpha = 8°$ and 25°. Lap $= 1\frac{1}{4}$ inches. Determine the point of cut-off.

51. Given the maximum cut-off at .7 stroke, α to be not over 24°. Angle of lead 8°, lap $1\frac{1}{4}$ inches, lead $\frac{3}{8}$ inch, centre of shaft to centre of valve connecting-rod at right angles to stroke of piston 40 inches, the valve connecting-rod to be attached outside, find the value of l_1, l_2, and r.

52. Given $l_1 = 27\frac{3}{4}$ inches, $l_2 = -21$ inches, $r = 3\frac{3}{16}$ inches, and lap $= 2\frac{5}{8}$ inches. Required the value of α for cutting off at half-stroke, the angle of lead being 6°.

53. With the data of Problem 52 and the length of the valve connecting-rod as 60 inches, determine the equalizing lever which will make the port-opening the same at the two ends of the cylinder and the cut-off at half-stroke.

54. If the crank is 16 inches and the connecting-rod 64 inches, determine an equalizing lever which will admit steam 6° before the beginning of each stroke, will cut off at exactly half-stroke on both strokes, and will give the same port-opening on both ends, the other data being as in Problem 52.

CHAPTER XIV.

RADIAL GEARS—MARSHALL, ANGSTROM, AND JOY.

105. Marshall's Gear.—Fig. 68 is a line diagram of a Marshall gear, which is more commonly used than any other form of simple radial gear. As in Fig. 61, *ab* is the crank, *ac* the eccentric, *ch* the vibrating-link or radius-rod, *de* the valve connecting-rod, and *ef* is the valve-stem. *i* is a fixed point on the frame to which a radius-rod *ig* is attached, and for any one grade of expansion and direction of running *ig* is fixed in position, and *g* is therefore practically a fixed point.

To *g* is attached a link $gh = gi$ and to *h* is attached the end of the vibrating-link *ch*. *h* therefore travels in the arc

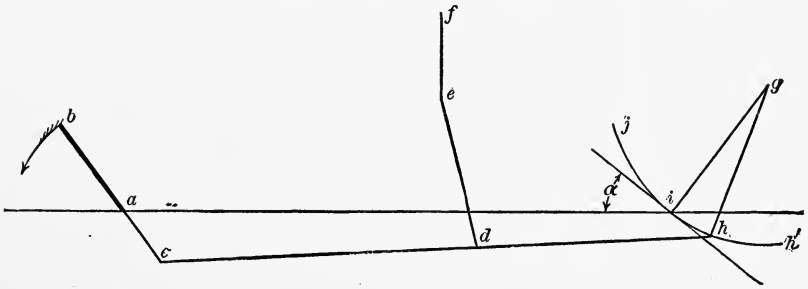

FIG. 68.

of a circle *jih'*, which replaces the straight line of the Hackworth motion.

A comparison of Figs. 68 and 61 will show that the same equation will represent the movement of the valve if we call α the angle made by the tangent of the arc *jh* at the point *i* with the centre-line *ia*.

106. Errors of the Zeuner Diagram.—Replacing the straight line by the arc, brings another error in the diagram,

which, as will be seen from Figs. 69 and 70, is quite an important one. Both figures show the Zeuner diagram in the

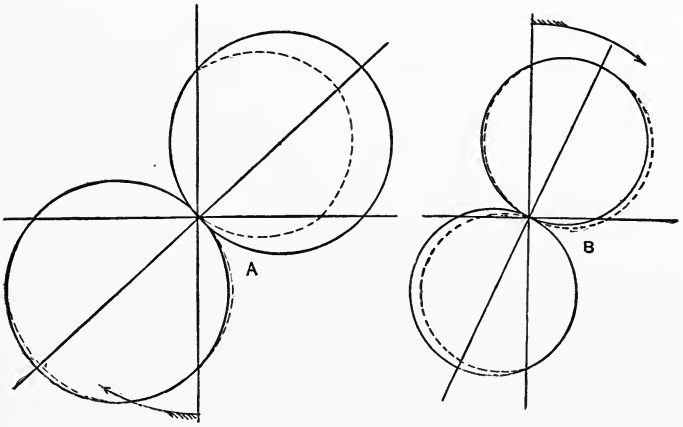

FIG. 69.

full lines and the actual movement of the valve in broken lines for a Marshall gear of the dimensions given in Fig. 68. Fig. 69 shows the diagrams for right-hand rotation, and

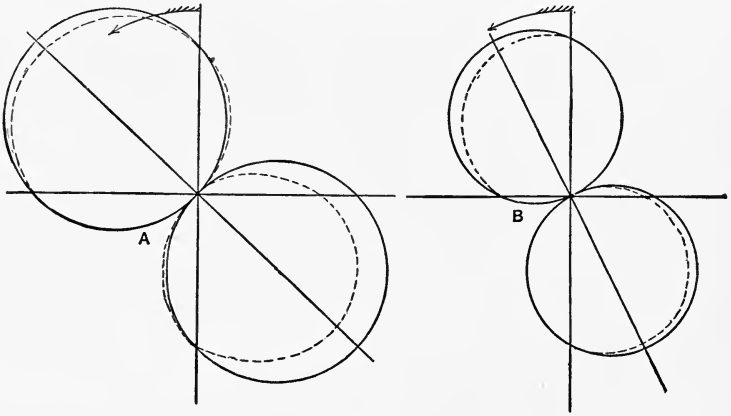

FIG. 70.

Fig. 70 for left-hand. In each figure A is for tan $\alpha = .75$, and B is for tan $\alpha = .4$.

An examination of these figures will show that for left-hand rotation the points of cut-off and port-openings for corresponding positions of the up and down strokes are more nearly equal. Horizontal engines should therefore be made to run in this way. For right-hand rotation the port-openings for corresponding positions on the up and down strokes are more unequal, and greater port-openings and more retarded cut-off are given on the up-strokes. Vertical engines should therefore be made to run in this direction, or, as is more commonly done, the eccentric could be set with the crank, and the valve driven from *ch* extended.

It is possible to work out a formula which gives more exactly the actual movement of the valve, but the results are too unwieldy for practical use.

The chief recommendation of this gear is the small number of working parts, and the excellent distribution of steam which can be obtained by a proper proportion of the parts.

107. Proportions of Gear.—The dimensions of the different parts of this gear affect seriously the points of cut-off, etc.; and the following are given by Mr. G. A. C. Bremme, the inventor, as good proportions for the various parts:

Radius-rod and arm *gi* (Fig. 68)	$= 6ac$;
Eccentric-rod, *ch*	$= 6ac$;
Lead arm *hd*	$= -4.5ac$;
Lap on steam edges (both sides equal)	$= .6ac$.

The angle α should never exceed 25°.

The problems give the principal dimensions of gears actually constructed which differ very materially from the proportions given above.

108. Designing.—The method of designing the parts, laying down the valve-diagram, and determining an equalizing lever are the same as already set forth under the Hackworth gear.

109. Angstrom's Gear.—Angstrom's gear is a modification of Hackworth's, and within certain limits is the exact equivalent of it. In Fig. 71 the end h of the vibrating-lever,

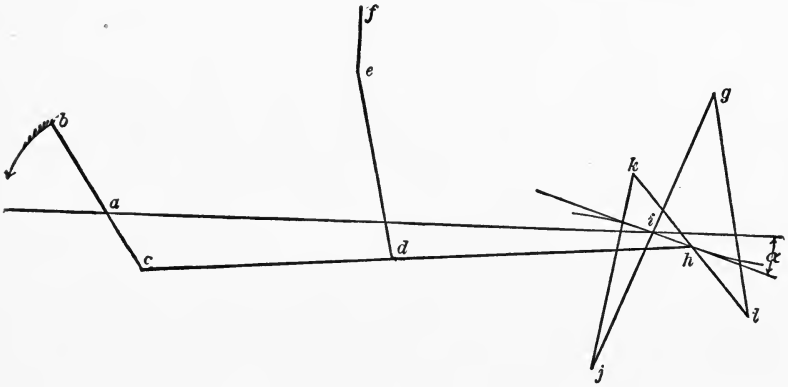

FIG. 71.

instead of being carried on a guide, is attached to a point h in a rod kl, the ends k and l swinging around the points g and j by the links gl and jk, the points g and j being fixed

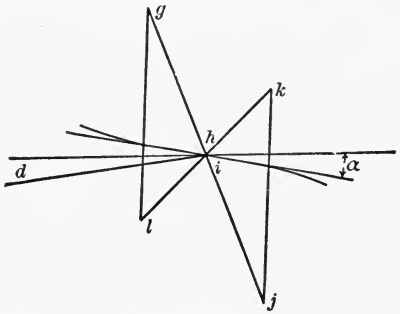

FIG. 72.

for any one point of cut-off. The whole arrangement forms a parallel motion. For a short distance on either side of i the motion of h is at a fixed angle to jg or to ai, and when b is not allowed to travel beyond this limit the formulæ and diagrams belonging to the Hackworth motion fit this gear. If, however, this limit is passed another error is introduced,

and its amount will depend on whether the parallel motion is made as in Fig. 71 or 72, either of which will give motion at the same angle α to ai.

110. The Diagrams.—If the diagrams are drawn for this gear as for the Hackworth and Marshall, it will be found that the results are much better if the parallel motion is connected as shown in Fig. 71, and right-hand rotation should be selected as giving more even cut-off and greater regularity of opening. This gear is superior to Marshall's but inferior to Hackworth's on the points mentioned, but it must be remembered that this only applies when the limits of the parallel motion are exceeded. As regards construction, it is inferior to Marshall's in that it has more links, and consequently less rigidity, while it has the advantage over Hackworth's of dispensing with the sliding motion of the end of the vibrating-lever.

111. Advantages and Disadvantages of Radial Gears.—There is a disadvantage under which all these gears labor. To give a well-balanced motion, the vibrating-lever ch must be long; and as all the stress, which is considerable in the case of an unbalanced valve or of high speeds, comes transversely on it, there is likely to be great vibration and danger of breaking.

The general advantages which are characteristic of all forms of radial gears are lightness, compactness, a small number of moving parts, and constant lead. There are several forms of compound radial gears, but the discussion of one will cover the ground sufficiently.

112. The Joy Gear.—Fig. 73 is a line sketch of a Joy gear as applied to a horizontal engine, ab is the crank, bc the connecting-rod. To a point d in the connecting-rod is attached the link de, the end e of which swings about a point f on the engine frame, the points e and f being connected by a link ef. ig is a rod having its lower end g connected to the link de; at its upper end i is connected to the valve-rod ij, which connects with the valve-stem at j. The point h of ig is guided along the arc of a circle lkm, either by guides or

by swinging around a centre. This arc is pivoted at k so that the cut-off can be changed or the engine reversed.

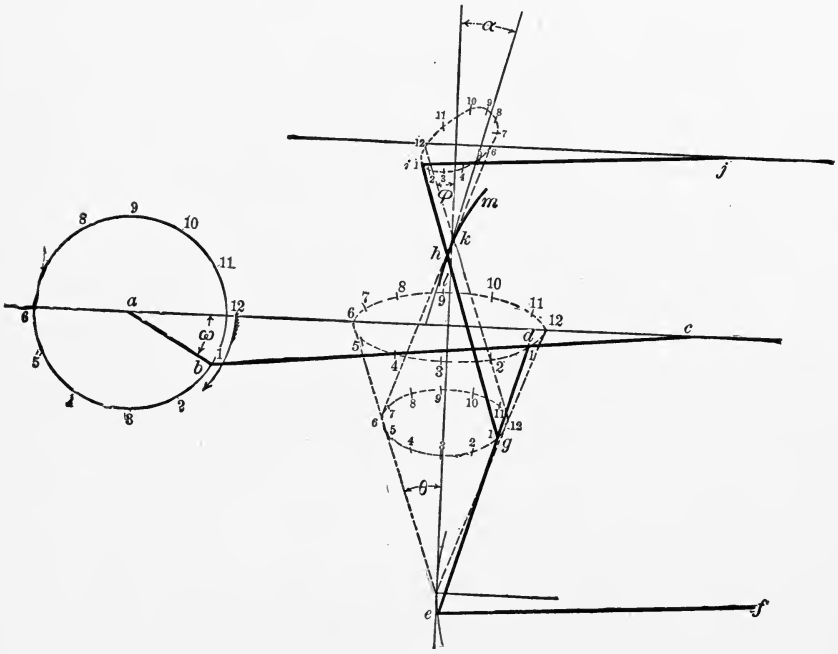

FIG. 73.

Remembering our definition of right-hand rotation, the direction shown by the arrow in Fig. 73 is left-hand.

The reason for compounding a radial gear is to do away with the eccentric. The figure shows the exact motion of the points d, g and i.

If the end of hg were attached directly to the connecting-rod at d, the point d during the lower half-revolution of the crank would describe the lower half of a curve which nearly coincides with a circle having k as a centre, so that h would have little motion along lm, and the only motion given to the valve would be that due to the oscillation of hi about k. By causing g to describe the irregular oval, the travel of the

point h above and below the centre of suspension k of the arc lm is equal and approximately symmetrical.

113. Movement of the Valve.—When the engine is on either dead-point, call θ the angle the link ed makes with a vertical line, and ϕ the angle hg makes with the vertical. Call the distance $de = l_3$, $dg = l_4$, $hg = l_1$, $hi = l_2$. Then l_4 vers $\theta = l_1$ vers ϕ, as the angularity of the rods should neutralize each other in a well-designed gear. Also, $l_4 \sin \theta + l_1 \sin \phi = R$ = radius of crank, as the point d should travel symmetrically under k. Also $l_3 \sin \theta = R$.

In designing, the most convenient assumption is that which fixes the value of l_4 and l_1. The distance from the centre of the valve-stem to the axis of the cylinder is fixed, and is approximately $l_2 + l_1 - l_4$. Having assumed these values, we have $l_4(1 - \cos \theta) = l_1(1 - \cos \phi)$,

$$l_4 \sin \theta + l_1 \sin \phi = R \quad \text{and} \quad l_3 \sin \theta = R.$$

From these equations, by eliminating θ and ϕ, we can get a value of l_3 in terms of l_4, l_1, and R.

In the Hackworth gear the movement of the valve is composed of two parts, one part mq, in Fig. 62, due to the movement of i along ice, and one part qk due to the turning of ir around i. In the Joy gear, Fig. 73, the point d moves vertically a distance $\frac{c}{b}R \sin \omega$ when c = the distance cd and $b = cb$, and d is a distance $R \cos \omega$ from its middle position. g has moved vertically practically the same distance as d, or $\frac{c}{b}R \sin \omega$, and horizontally is $\frac{l_3 - l_4}{l_3}R \cos \omega$ from its middle position.

If, then, instead of $r \sin \omega$ in the equation to the Hackworth motion, we put $\frac{c}{b}R \sin \omega$, and instead of $r \cos \omega$ we put $\frac{l_3 - l_4}{l_3}R \cos \omega$, we get the equation to the movement of the valve.

As i is beyond h, the equation for the Hackworth motion is

$$x = \frac{l_2}{l_1} r \cos \omega + r \left(\frac{l_1 + l_2}{l_1} \tan \alpha \right) \sin \omega;$$

and making the substitutions noted above, we have

$$x = \frac{l_3 - l_4}{l_3} R \frac{l_2}{l_1} \cos \omega + R \left(\frac{l_1 + l_2}{l_1} \tan \alpha \right) \frac{c}{b} \sin \omega,$$

from the movement of the valve from its middle position. The co-ordinates of the centre of the valve-circles are horizontally $\frac{l_3 - l_4}{2l_3} R \frac{l_2}{l_1}$, and vertically $\frac{R}{2} \cdot \frac{c}{b} \left(\frac{l_1 + l_2}{l_1} \tan \alpha \right)$.

From these values the valve-circle can be drawn, and the points of cut-off, steam admission, etc., determined.

114. Errors of the Zeuner Diagram.—The errors in using the diagram are shown in Figs. 74 and 75, where the

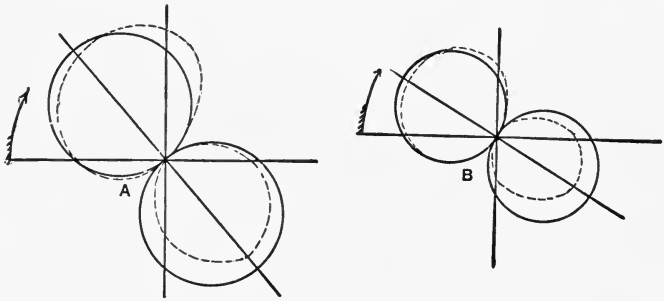

FIG. 74.

arrows indicate the movement of the crank: that is, Fig. 74 is for left-hand rotation by definition, and Fig. 75 is for right-hand rotation, A being drawn for $\tan \alpha = .75$, and B for $\tan \alpha = .4$. It will be seen that the lead is equal on both ends of the cylinder for motion in either direction, but the cut-off is more nearly equal for right-hand rotation than for left.

QUESTIONS.

142. Sketch and describe a Marshall gear.

143. Deduce the equation for the movement of the valve with the Marshall gear.

144. What parts of the valve movement are most affected by the errors of the Zeuner diagram?

145. How should a horizontal engine run with a Marshall gear? A vertical? Why?

146. Explain the method of designing a Marshall gear.

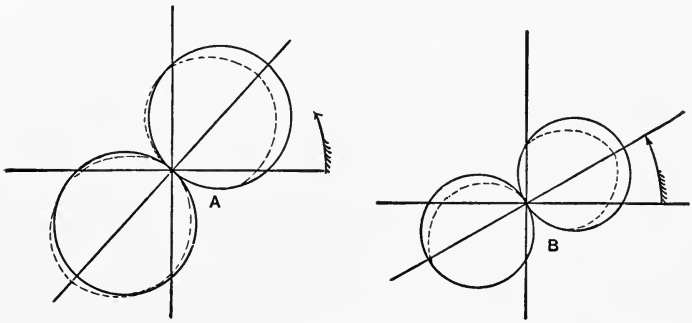

FIG. 75.

147. Sketch Angstrom's gear, and what is the objection to it?

148. What are generally the advantages and disadvantages of radial gears?

149. Sketch a Joy gear.

150. Determine the movement of the valve in the Joy gear.

151. Is the Zeuner diagram a close approximation in the case of a Joy gear?

152. If the smaller opening of the port is desired on the end opposite that which the gear as connected would give it, what must be done to change it?

PROBLEMS.

Problems 50, 51, and 52 apply equally well to the Marshall gear.

55. Solve Problem 53 for a Marshall gear, having the reversing-arm and radius-rod each $18\frac{1}{2}$ inches.

56. Solve Problem 54 for a Marshall gear having the reversing-arm $18\frac{1}{2}$ inches.

57. In a Joy gear having crank 8 inches, $c = 13$ inches, $b = 39$ inches, $l_1 = 16$ inches, $l_2 = 8$ inches, $l_3 = 24$ inches, and $l_4 = 8$ inches, the lap being 2 inches, and the reversing-arm and radius-rod 12 inches, find the value of α for cutting off at $\omega = 90°$, the angle of lead being 8°.

58. Draw a diagram for the Joy gear in Problem 57, showing the error of the Zeuner diagram for cutting off at $\omega = 90°$ on both strokes.

59. If the engine is to cut-off exactly at half-stroke on both ends, what must be the lap and the lead on each end.

60. In a Marshall gear having $r = 5\frac{1}{4}$ inches, lap $1\frac{1}{2}''$, $l_1 = 66$, and $l_2 = 30$, the reverse lever 30 and $\tan \alpha = .6$. Find the points of cut-off in both ends of the cylinder from the Zeuner diagram, and by laying down the gear, if the stroke is 48 inches; and the connecting-rod 100 inches.

CHAPTER XV.

DOUBLE VALVES—GRIDIRON VALVE.

115. Kinds of Double Valves.—We have already seen that in the case of a single valve moved by an eccentric, early cut-off makes equally early admission, and affects the exhaust in the same way as the steam. To retain the proper opening and closing of the exhaust while varying the cut-off, double valves are used, and may be divided into two general classes.

In the first class the second valve called the cut-off valve moves on an independent valve-seat, and controls the admission of steam to the steam-chest of the main valve. By cutting off the admission of steam to the main valve-chest, steam is prevented from entering the cylinder whether the main valve is open for steam or not. As the exhaust takes place under the main valve, no change is made in the exhaust.

In the second class the cut-off valve moves on the back of the main valve, and produces the same effect.

116. Gridiron Valve.—The first class is represented in Fig. 76, which is a sketch of a Gonzenbach or gridiron valve. *a* is the main valve, *b* is the valve-chest, *c* is the seat of the cut-off valve, and *d* the cut-off valve itself.

Steam first enters the space *e* above the cut-off valve, and when this valve is open passes through the ports *g* and *h*, into the main valve chamber *b*. If the valve *a* opens, steam then passes into the cylinder. After steam is cut off by the valve *d*, the steam in the chest *b* and in the cylinder expands as one volume; and after the main valve closes, the steam in the cylinder alone expands. Exhaust takes place under the valve

a as in an ordinary slide. The valves *a* and *d* are moved by independent eccentrics, but the valves never occupy the

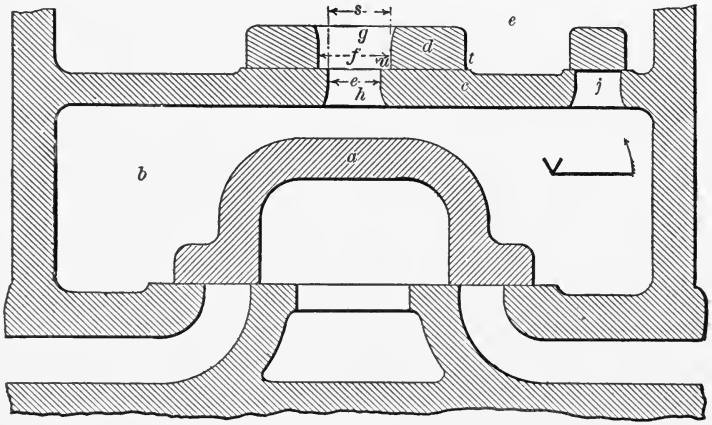

FIG. 76.

relative positions shown when connected to their eccentrics. The small diagram shows the relative position of the crank and the two eccentrics.

117. Polonceau Valve.—A valve of the second class is shown in Fig. 77, which is a sketch of Polonceau's valve. The valves are in their middle position at the same time—a

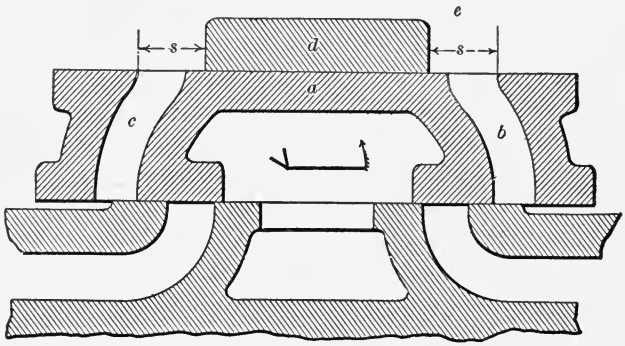

FIG. 77.

position they never assume if connected to their eccentrics. *a* is the main valve, which has two passage-ways *b* and *c*, the

part between the passage-ways being an ordinary **D**-slide. On the back or tops of the main valve is a cut-off valve *d*, which is a plain flat block. Each valve is moved by its own eccentric.

As the main valve moves to the left steam passes from the chest *e* through the passage *b*, to the steam-passage leading to the right-hand end of the cylinder. The block *d* is moving at the same time, and by a proper setting of the eccentrics, at the right point in the stroke the valve *d* covers the passage *b*, and steam is cut off. The exhaust here as in the other class takes place independently of the admission and cut-off. The small diagram shows the relative position of the crank and the two eccentrics.

118. Diagram for Gridiron Valve.—To determine the point of cut-off, etc., of the Gonzenbach valve, we proceed

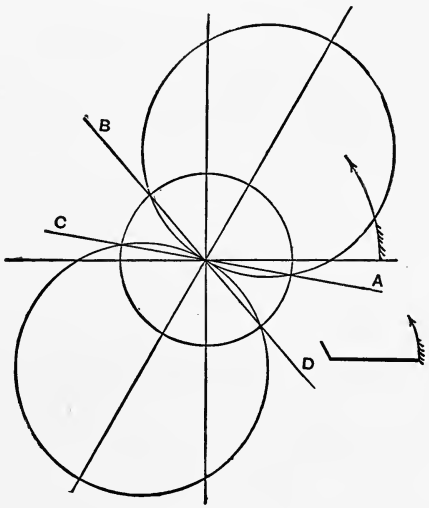

FIG. 78.

as follows: In Fig. 78 draw the diagram for the main valve as for any single valve. As the exhaust is not affected by the cut-off arrangement, we will omit the exhaust lines from the diagram. In the figure *A* is the admission and *B* the

cut-off in the right-hand end of the cylinder, C is the admission, and D the cut-off for the left-hand end.

Suppose the cut-off valve to be moved by an eccentric without angular advance. Fig. 79 will then represent the distance the cut-off valve has moved from its central position for any position of the crank. If the width of the port h is e and of g is f, it is evident that if the valve moves away from its central position a distance $\frac{e+f}{2} = s$, the edge of d is just closing the port h. If in Fig. 79 we draw a circle efg with s as a radius, the cut-off valve covers the port while the crank is passing from E to F.

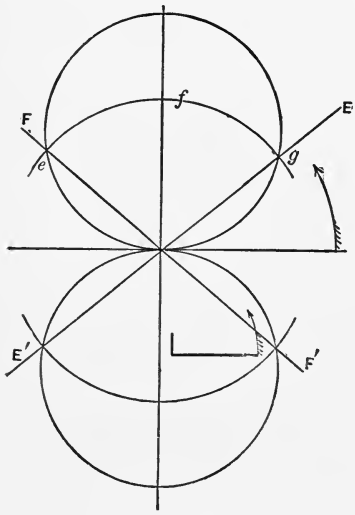

FIG. 79.

Referring to Fig. 78, it is evident that the cut-off valve must open between D and A in order that the steam may be admitted as soon as the main valve opens. It must close between A and B to cut off before the main valve does, and it must not open again until the crank passes B, otherwise steam would be admitted twice during one stroke. The cut-off valve must again open between B and C to admit steam to be ready for the next stroke.

That is, in a combined diagram for the two valves E should fall between A and B, and F should fall between B and C, and this generally requires that the angle of advance of the cut-off valve should be negative.

119. Combined Diagram for both Eccentrics.—Fig. 80 represents such a combined diagram. Steam is admitted through the cut-off valve at F' and the main valve opens at A. Cut-off by the cut-off valve takes place at E and by the main valve at B. The cut-off valve opens again at F, and

the main valve to the other end of the cylinder at *C*. As the point *F* must always fall between *B* and *C*, the limits of cut-off obtainable by this gear are not very great.

If *E* falls on *B*, the main and cut-off valve close at the same time; and if *F* falls on *C*, the cut-off takes place at E_1,

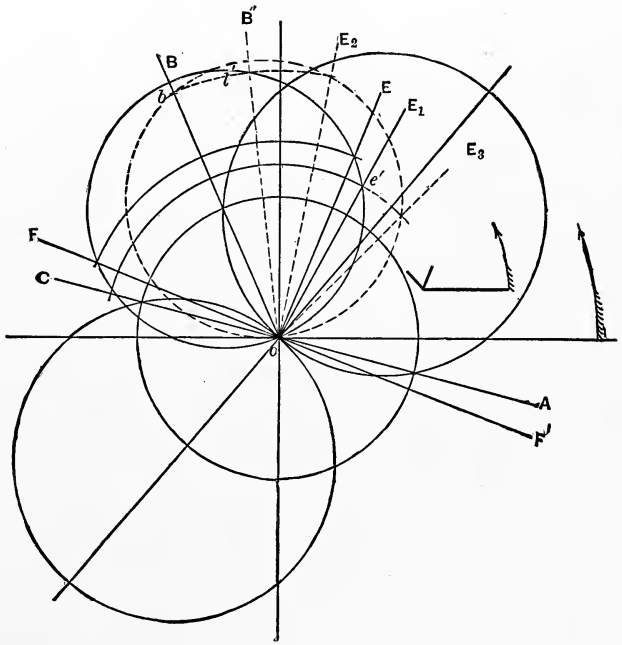

FIG. 80.

and the cut-off can therefore be changed by changing the value of *s* between *oe'* and *oB*.

120. Limits of Cut-off.—In the diagram we have drawn, the centre of the cut-off valve-circle falls on *oB*. If it falls on any other line, as *oB'*, the limits of the cut-off would be less. For if *ol'* is such a value of *s* that it cuts the cut-off valve-circle on *oB*, the cut-off takes place on oE_2, and any greater value of *s* will cause the valve to admit steam twice

during the stroke. The range of cut-off is then from oE_3 to oE_2. This, while allowing an earlier cut-off, gives less range, and at the same time makes a bad distribution of steam if a later cut-off than oE_2 is required.

It is generally better to draw the diagram so that the centre of the valve-circle for the cut-off valve is on the line of cut-off for the main valve.

121. Width of Ports.—In laying down the diagram all the data of the main valve are given, or can be determined as already shown for a plain slide. The area of the port through the seat of the cut-off valve should be as great as and preferably a little greater than the area through the main valve-seat. This will determine the value of e.

The opening in the cut-off valve is usually greater than this. The reason for this is, that the valve may be opened and closed quickly, or for the same reason that the over-travel is given to an ordinary slide-valve. Evidently the port begins to close when the valve has travelled a distance $\frac{f-e}{2}$ from its middle position, is entirely closed when $x = s$, begins to open again when x is equal to s, and is wide open again when $x = \frac{f-e}{2}$.

122. Angle of Advance.—Having determined e and f, suppose in Fig. 81 we have the main valve-circle given, cutting off at ob, and suppose it is desired with the cut-off valve to cut off steam when the crank is at oe. With a radius equal to s, draw the circle fgh. Then, in order that the cut-off valve will not admit steam again before the main valve cuts off, the valve-circle for the cut-off valve must pass through f, o, and h, or some point beyond h on the line oh. Making it pass through h gives oi for the throw of the eccentric, and goi for the angle of advance, which is negative. This is the least travel and the least angle of advance this cut-off eccentric can have.

The greatest angle of advance and travel of the valve can

be determined by causing the valve-circle to pass through *o*, *f*, and *d*, the admission to the other end of the cylinder. If the engine is to cut off permanently at one point, an intermediate value should be taken to make sure that the port is well open at the admission for the return stroke.

123. Varying Cut-off.—As a certain range of cut-off is possible for a given valve, we will see how it can be obtained,

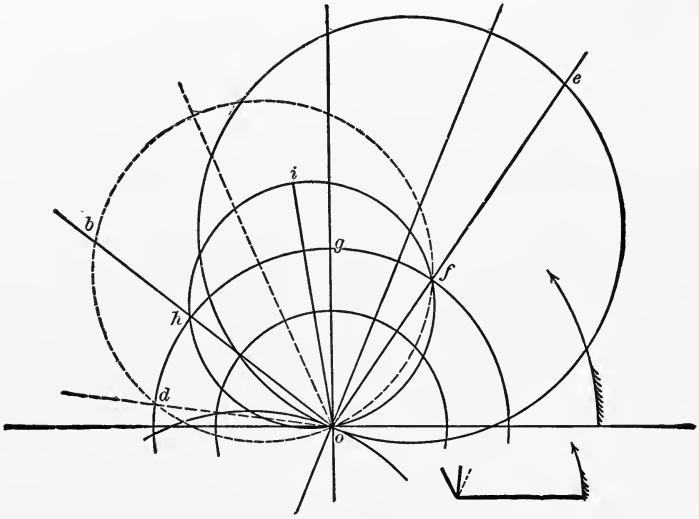

FIG. 81.

and the engine made self-regulating within that range. An examination of Fig. 81 shows that if the angle of advance alone is increased the cut-off is later, but it cannot be made less than that shown in the figure. If the value of *oi* alone is increased the cut-off is earlier, but *oi* can only be increased until the cut-off valve-circle passes through *d*.

If the angle of advance then is increased to *gob* and the valve-circle be made to pass through *h* and *o*, the cut-off will be on *ob*. This of course gives the latest possible cut-off. If now the eccentricity is increased, the cut-off is earlier and

earlier, until, when the valve-circle passes through *d*, it is the earliest possible.

With a given eccentricity the earliest cut-off is obtainable by giving it such an angle of advance that the valve-circle passes through *h*, and the latest by making it pass through *d*. A range of cut-off equivalent to the angle *hod* only is obtainable, and this small limit of variation is the reason why this cut-off is not more commonly used.

124. Arrangement used for Varying Cut-off.—An arrangement has been devised by which the travel of the cut-off valve can be changed, thereby changing the point of cut-off. In Fig. 82 *a* is the shaft, *ab* is the crank, *ac* the

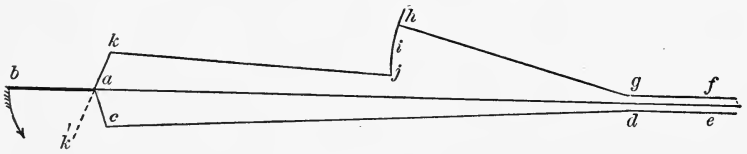

FIG. 82.

main-valve eccentric, *cd* its eccentric-rod, and *de* the valve-stem. *fg* is the cut-off valve-stem, *gh* a radius-rod, the end *h* being connected to one end of a reverse-lever *hij* swinging around *i*. The end *j* of the reverse-lever is connected by the eccentric-rod *jk* to the cut-off eccentric *ak*, which is set in the position shown because of the reverse-lever being used (the cut-off eccentric having negative angular advance). *ih* is an arc having *hg* as a radius. By moving *h* in this arc the travel of the valve is changed in the proportion of *ih* to *ij*.

The part of *ih* over which *h* can move is limited by the greatest and least allowable travel from the diagram.

125. Width of Cut-off Valve.—The width of the piece *d* of Fig. 76 is yet to be determined. From its middle position the valve moves in either direction a distance r_1 = the throw of the cut-off eccentric. The distance from the edge *u* to *t* should be greater than r_1, or the outer edge of the

valve should never uncover the port. Therefore the width of the valve with a single port should be greater than $2r + e$.

126. Varying Width of Block.—There is one other way in which this valve could be made to vary the cut-off, and that is by changing the value of s. In one gear this is done by causing the cut-off valve to slide on a plate which is adjustable, changing the value of e and the point of cut-off.

QUESTIONS.

153. Why are double valves used?

154. Sketch and describe the two classes of double valves treated of.

155. Explain the method of drawing the diagrams for a gridiron valve.

156. What limits are there to the position of the valve-diagram for the cut-off valve?

157. What are the limits of cut-off with a gridiron valve?

158. What fixes the width of port in the cut-off valve and its seat?

159. In designing a gridiron valve what considerations govern the fixing of the angular advance?

160. How can the cut-off be varied, and what arrangement is used for that purpose?

161. How determine the width of the cut-off valve?

162. Draw the valve-diagram of the gridiron valve and show the effect of varying the width of the port in the cut-off valve.

PROBLEMS.

61. Having given $r = r_1 = 2\frac{5}{8}$ inches, $\delta = -\delta_1 = 18°$, lap $\frac{5}{8}$ inch, $e = 1$ inch, $f = 1\frac{1}{4}$ inches, determine the point of cut-off and the variation of cut-off which would be possible by changing the eccentricity of the cut-off eccentric.

62. The main valve is to cut-off at $\frac{2}{3}$ stroke $\delta_1 = -5°$, maximum $r_1 = 3$ inches, $e = 1.5$ inches, $f = 2$ inches, what

are the limits of r_1, and between what values of ω can the cut-off be varied?

63. The main valve is to cut off at $\frac{3}{4}$ stroke, and the cut-off with the cut-off valve is to vary from $\frac{1}{4}$ to $\frac{2}{5}$ stroke, $e = 1\frac{1}{4}$, $f = 1\frac{3}{4}$, what must be the angular advance and limiting values of r_1?

CHAPTER XVI.

RELATIVE MOVEMENT--POLONCEAU GEAR.

127. One Valve on the Back of Another.—To investigate a valve-motion of the second class, we must first determine the relative motion of two valves, each moved by an eccentric, when one moves on the back of another. In Fig. 83

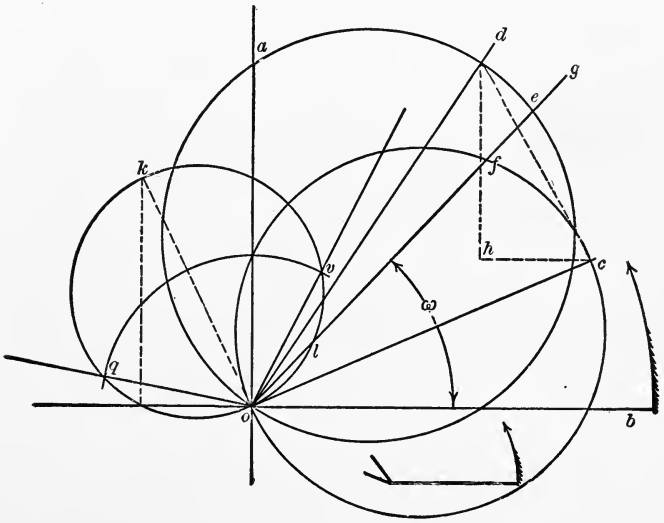

FIG. 83.

suppose we have the diagrams of two valves, one with an eccentricity $r = od$ and an angle of advance $\delta = aod$, and the other with an eccentricity $r_1 = oc$ and an angle of advance $\delta_1 = aoc$.

From the diagram, if ob is one dead-point, when the crank has moved through an angle $\omega = bog$ the first valve has moved from its middle position a distance oe, and the

second has moved in the same direction from its middle position a distance of, and the distance between the centres of the valve is

$$fe = oe - of.$$

128. Relative Valve-circle.—As seen from the first part of the work,

$$oe = r \sin (\omega + \delta),$$

and

$$of = r_1 \sin (\omega + \delta_1),$$

and

$$\begin{aligned} ef &= r \sin (\omega + \delta) - r_1 \sin (\omega + \delta_1) \\ &= r \sin \omega \cos \delta + r \cos \omega \sin \delta - r_1 \sin \omega \cos \delta_1 \\ &\qquad - r_1 \cos \omega \sin \delta_1 \\ &= (r \cos \delta - r_1 \cos \delta_1) \sin \omega + (r \sin \delta - r_1 \sin \delta_1) \cos \omega. \end{aligned}$$

The value of ef can be represented by a circle, the co-ordinates of the centre being

$$\frac{r \sin \delta - r_1 \sin \delta_1}{2} \quad \text{and} \quad \frac{r \cos \delta - r_1 \cos \delta_1}{2},$$

and the other extremity of the diameter through o has co-ordinates $r \sin \delta - r_1 \sin \delta_1$ and $r \cos \delta - r_1 \cos \delta_1$.

In the figure, if we draw dh parallel to ao and ch parallel to ob, the line

$$dh = r \cos \delta - r_1 \cos \delta_1$$

and

$$ch = r \sin \delta - r_1 \sin \delta_1,$$

and the line from d to c is therefore equal in length and parallel to the diameter of the circle, which shows the length of ef for every value of ω, and this we will call the relative valve-circle.

129. To draw the Relative Valve-circle. — Drawing through o the line ok parallel and equal to dc, we have the

diameter of the relative valve-circle in its proper place. Drawing the circle on *ok* as a diameter, we have a diagram showing the relative motion of the two valves. That is, when the crank gets to any position, as *og*, the distance *ol* is the distance between the centres of the two valves.

130. The Polonceau Valve.—Referring now to Fig. 77, when the valves have moved so that the distance between their centres is *s*, the valve *d* covers the steam-passage and steam is cut off. If now, in Fig. 83, with *o* as a centre we draw a circle *qv* with *s* as a radius, steam is cut off when the crank reaches *ov*, and the port opens again when the crank reaches *oq*. If now *oq* is later than the point of cut-off of the main valve, steam is admitted only once during each stroke, and the movement is correct. An examination of Fig 83 shows that if by any means we can change the angular advance or travel of either eccentric or valve we can change the position and size of the relative valve-circle, and consequently change the point of cut-off.

131. The Polonceau Gear.—Perhaps as simple a way of changing the travel of the valve and angular advance as any is by using a link-motion. Let Fig. 84 be a Gooch motion

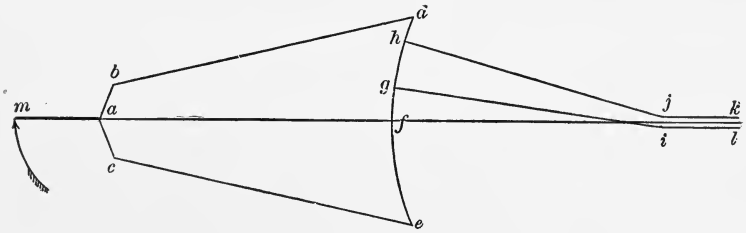

FIG. 84.

arranged with two radius-rods, so that the main valve is attached to one and the cut-off valve to the other. If the radius-rods are at the same point on the link, the valves move together and the cut-off is that due to the main valve.

132. Valve Diagram.—The valve-diagram is that given in Fig. 85 by the circle 1, and the cut-off takes place at *oa*.

If now the radius-rod of the cut-off valve is lowered, say

half-way to the centre, the diagram for the main valve is that given by the circle 1 and for the cut-off valve that given by 2, and the relative valve-circle is found by laying

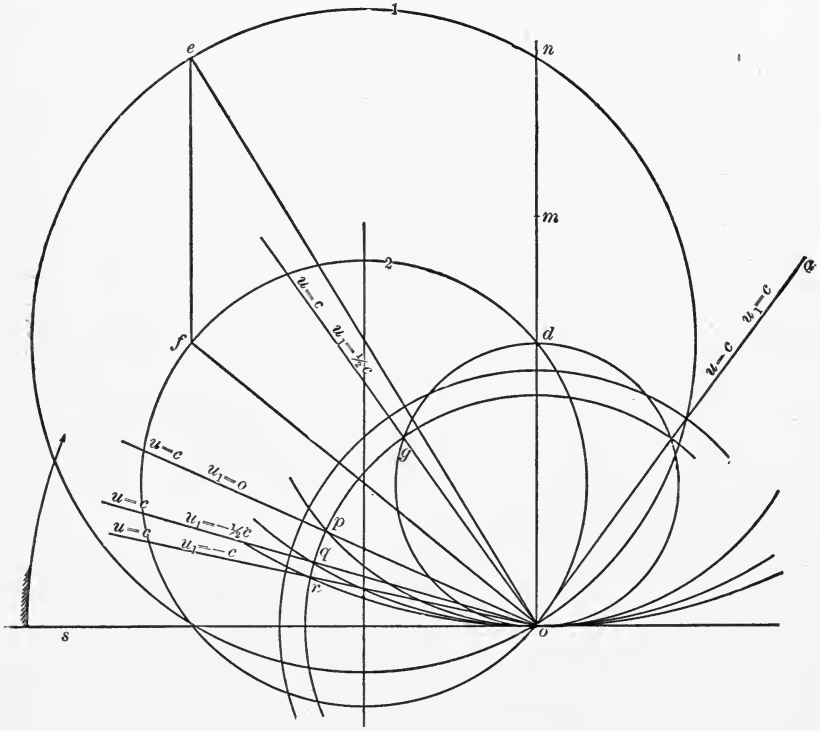

FIG. 85.

off *od* equal and parallel to *fe*. As for a Gooch link *fe* is parallel to *on*, the centre of the relative valve-circle is on *on*. Drawing the relative valve-circle, and drawing a circle *gpqr* with *s* as a radius, then *og* is the cut-off for the main valve $u = c$, the cut-off valve $u_1 = \frac{1}{2}c$.

133. Limits of Cut-off.—If for the cut-off valve we had made u_1 greater than $\frac{1}{2}c$ for the particular dimensions selected, the point *d* would have fallen lower on the line *on*, and the circle with *s* as a radius would have cut the relative valve-circle a second time before the main valve cuts off, or

steam would have been admitted twice during one stroke. Evidently the cut-off at *og* is the latest cut-off possible with this particular gear.

When $u_1 = 0$ for the cut-off valve, the centre of the relative valve-circle is at *d* and the cut-off is at *op*. For the cut-off valve $u_1 = -\frac{1}{2}c$, *m* is the centre of the relative valve-circle, and the cut-off is at *oq*. For $u_1 = -c$ for the cut-off valve-circle the centre of the relative valve-circle is at *n*, and the cut-off takes place at *or*.

As the radius-rod can be lowered no further, it is evident that *or* is the earliest cut-off attainable with this gear. The cut-off is therefore limited to the distance between the two positions of the crank *or* and *og*, and is therefore of quite restricted use except for engines requiring a large amount of power when starting, at which time the cut-off can take place by the main valve, and afterwards much less power can be used, as the engine gets down to its steady load.

With a link-motion actuating both valves in this way the latest point of cut-off by the cut-off valve is at such a position that the distance from the point of cut-off to mid-stroke is the same as the distance from mid-stroke to the point of cut-off by the main valve.

134. Dimensions of Valve.—The area of the passages *b* and *c* both at the top and bottom of the main valve should be as great or greater than the area of the main steam-port. The length of *d*, Fig. 77, should be so great that the left-hand edge of *d* should never pass the left-hand edge of *b*. Calling *e* the width of the port in *b* and r_x the relative valve-circle diameter, the length of $d > r_x - (s - e)$ or $d > r_x + e - s$.

The distance between the steam-passages on the top of the main valve $= d + 2(s - e)$.

The outer wall of the steam-passage *b* should be so wide that for the greatest relative travel the right-hand edge of *d* should pass over the end of the valve or be $< r_x - s$.

QUESTIONS.

163. What is meant by the relative valve-circle, and how is it determined?

164. Prove that the relative movement of the two valves is given by the relative valve-circle.

165. Describe the Polonceau valve.

166. What arrangement was used for moving the Polonceau valves?

167. How is the valve-diagram for a Polonceau valve and gear drawn?

168. What are the limits of cut-off with this gear?

169. How are the dimensions of the main and cut-off valves determined?

PROBLEMS.

64. A Polonceau valve is driven by a Gooch motion having $r = 2\frac{5}{8}$ inches, $g = 57$ inches, $\delta = 27°$, and lead equal to $\frac{1}{4}$ inch, and for $u = 6$ the cut-off just opens as the main valve closes. Length of link 12 inches. Draw a diagram showing the cut-off for $u = 6$ inches, $u_1 = 2$, 4, and 6 inches.

65. Determine the greatest and least limit of the cut-off with the data of Problem 64.

66. If the port in the main valve-seat is $1\frac{3}{8}$ inches and in the cut-off valve-seat is $1\frac{3}{4}$ inches, with the value of s as found for Problem 64 draw the valve in the position it would occupy if $\omega = 40°$ and the cut-off at $\frac{1}{4}$ stroke; the exhaust-port in the main valve-seat being 4 inches and the bridges $1\frac{1}{2}$ inches, the iron being $\frac{7}{8}$ inch thick in the valves.

CHAPTER XVII.

BUCKEYE GEAR.

135. The Valve.—The Buckeye Automatic Engine valve resembles the valve we have been dealing with, but its method of action is entirely different. Fig. 86 is a part section through the valves and cylinder. *a* is the main valve, having ports *b*, through which steam passes from the chest *h* to the passage *c* in the cylinder. *e* and *e* are two blocks

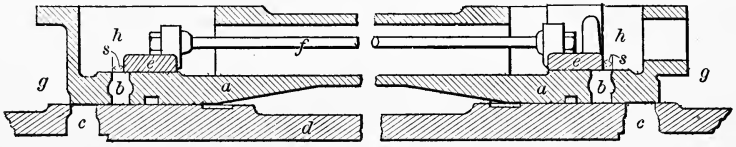

FIG. 86.

connected by rods *f* passing through an opening in the main valve, and forming together the cut-off valve. As steam is admitted through *h*, and the exhaust takes place at *g*, the action of the main valve is the same as of an ordinary **D**-slide taking steam inside and exhausting outside.

136. The Eccentrics and Connections.—In Fig. 87 if *ab* is the crank turning as shown by the arrow, an eccentric *ac*

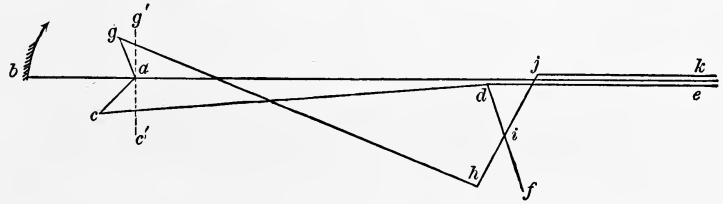

FIG. 87.

connected directly, by an eccentric-rod *cd*, to a valve-stem *de* would give the main valve the proper motion.

At the point *d*, the eccentric-rod is also connected to the

lever df, which is pivoted to the frame of the engine at f. i is the middle of df, and to i is attached the centre of a vibrating-lever hj, one end of which, j, is connected to the cut-off valve-stem jk, and the other end, h, is connected by the eccentric-rod hg to the cut-off eccentric ag. Assume that ac and ag are in their middle position when at ac' and ag'. Call $c'ac = \delta$ and $g'ag = \delta_1$. Call $ac = r$ and $ag = r_1$ (in the Buckeye engine these are equal). Evidently, if both eccentrics are in their middle positions at the same time, the valves would occupy the positions shown in Fig. 86; but as the eccentrics are never in their mid-positions at the same time, the valves and ports are never, in the engine, as shown in the figure.

137. **Movement of the Valves.**—When the crank ab has moved in the direction of the arrow through the angle ω, if the eccentrics are in their proper position the angle $c'ac = \delta + \omega$ and $g'ag = \delta_1 - \omega$. The main valve has moved to the left a distance $r \sin(\omega + \delta)$. The point d has moved to the left the same distance, and the point i has moved to the left $\frac{r}{2} \sin(\omega + \delta)$. If the eccentric ag is still in its mid-position the lever hj turns about h as a centre, and j has moved to the left a distance $= r \sin(\omega + \delta)$, and the cut-off valve has moved to the left a distance $r \sin(\omega + \delta)$ due to the movement of the main eccentric alone. To bring the cut-off eccentric to its proper position g moves to the right a distance $r_1 \sin(\omega - \delta_1)$ and j moves to the left a distance $r_1 \sin(\omega - \delta_1)$, and the total movement of the cut-off valve is $r \sin(\omega + \delta) + r_1 \sin(\omega - \delta_1)$, and the relative movement of the two valves is

$$\begin{aligned} x &= r \sin(\omega + \delta) + r_1 \sin(\omega - \delta_1) - r \sin(\omega + \delta) \\ &= r_1 \sin(\omega - \delta_1). \end{aligned}$$

But this is the equation to the valve-circle for the cut-off valve; that is, the arrangement is such that the cut-off valve moves on the main valve in the same way as though the

main valve did not move at all, and the cut-off eccentric was connected through an ordinary reverse lever to the cut-off valve.

138. Cut-off Valve-diagram.—In Fig. 88 we have drawn the valve diagram for the cut-off valve δ_1 being negative. From Fig. 86 we see that the cut-off valve must move to the left a distance s to close the port in the steam-valve. With this distance s as a radius draw the circle *cde*. The cut-off takes place when the crank is at *oc* and the port is again open when the crank reaches *oe* and remains open on the same end until the crank again reaches *oc*.

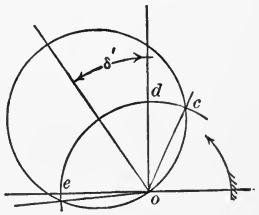

FIG. 88.

139. Changing Cut-off.—If the angle of advance of the cut-off valve is made variable, the point of cut-off can be changed to any extent as long as *oe* does not come before the cut-off of the main valve, and it is by changing the angular advance of the cut-off valve that the cut-off is made variable in the Buckeye engine. In Fig. 89 let $goa = \delta$, the

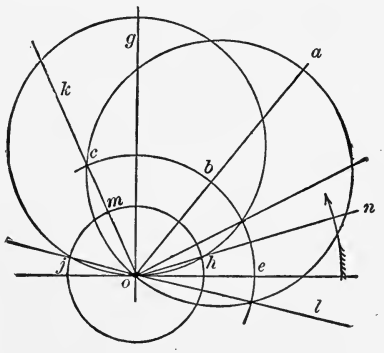

FIG. 89.

angle of advance of the main valve. Draw the main valve circle; *cbe* is the steam-lap circle. Steam is admitted when the crank is at *ol* and cut-off at *ok*. The circle *jmh* is described with s as a radius. The earliest possible cut-off would be when the valve-circle for the cut-off valve passes through *o*.

and *m*. This will be found to be at or before the beginning of the stroke, and of course no such movement of the eccentric is necessary. If the angle of advance δ_1 is zero, the cut-off takes place at *on*, and the port is again open to steam at *oj* after the main valve has cut off at *ok*. As δ_1 increases negatively the point of cut-off is later and later, and if necessary could be made as late as with the main valve by allowing the cut-off valve to change its angular advance sufficiently.

140. The Governor.—The arrangement by which the change in angular advance is effected is shown in Fig. 90.

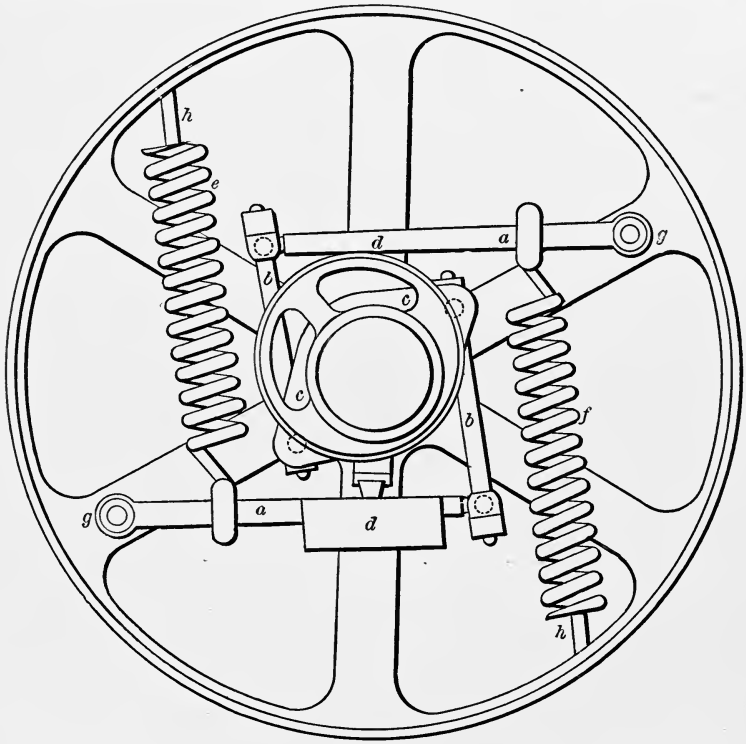

FIG. 90.

A governor-wheel is keyed to the shaft; *a* and *a* are two arms pivoted to the arms of the wheel at *gg*; *bb* are rods

joining these arms to the lugs *cc*, which are attached directly to the cut-off eccentric. This eccentric is loose on the shaft while the eccentric for the main valve is secured at its proper angle of advance; *dd* are weights which, as the speed increases, fly out and turn the cut-off eccentric, thus changing the angle of advance; *e* and *f* are springs which act against the centrifugal force tending to throw the weights outward.

QUESTIONS.

170. Make a sketch of the Buckeye valve, and show the relative position of crank and eccentrics which would drive the valve as a Polonceau is driven.

171. Make a sketch of the eccentric and connections when the engine is intended to run in the direction opposite to that shown in Fig. 87.

172. Deduce the equation to the relative moments of the two valves.

173. Draw the cut-off valve-diagram, and explain how the point of cut-off is changed.

174. Sketch and explain the governor.

PROBLEMS.

67. In a Buckeye gear if the lap is $1\frac{1}{4}$ inches, the port-opening is $1\frac{5}{8}$ inches, and the maximum cut-off is to take place at $\frac{2}{3}$ stroke, what must be the travel of the main valve? If the cut-off eccentric has the same eccentricity, what must be the angular movement of the cut-off eccentric to vary the cut-off from $\frac{1}{8}$ to $\frac{2}{3}$ the stroke, and what must be the actual value of δ for cutting off at $\frac{2}{3}$ stroke, s being 1 inch?

68. If the value of s is changed, does it make any difference in the angular movement of the eccentric? Can the value of s be made too large or too small? How then would you choose the proper value? What should it be in the last problem?

69. What must be the width of the cut-off blocks in the last problem?

CHAPTER XVIII.

MEYER VALVE AND GUINOTTE GEAR.

141. The Meyer Valve.—We have seen that by changing the position of the cut-off eccentric the point of cut-off can be changed. There is another device by which this can be done, which is shown in the Meyer valve, represented in Fig. 91. *a* is the main valve, having passages through it like the Polonceau valve. *b* and *c* are the cut-off blocks,

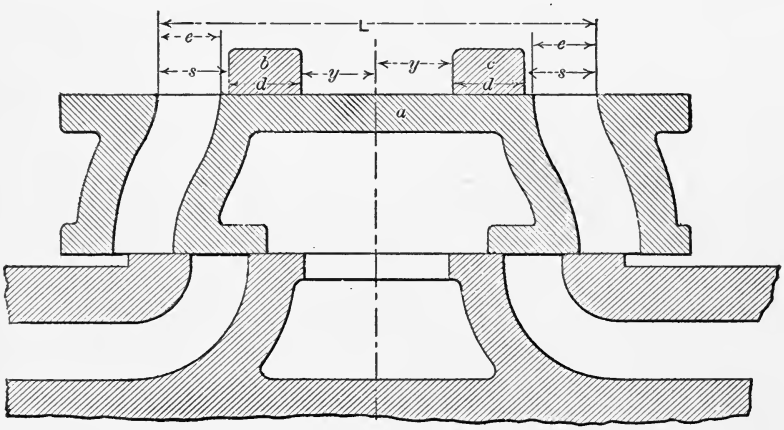

FIG. 91.

which together form the cut-off valve. The valves are moved by independent eccentrics connected directly.

The valve-diagram for this valve is the same as for the Polonceau. *b* and *c* are connected by a right- and left-handed screw by means of which the distance between the blocks is regulated.

142. Changing the Distance between the Blocks.—To determine what effect the changing of the distance between

the blocks has on the point of cut-off, let Fig. 92 be the valve-diagram, supposing the main-valve eccentric to be set with an angle of advance *abe*, and the cut-off eccentric with an angle of advance *abd*. Then, as already shown, for the Polonceau gear the relative valve-circle is that shown at

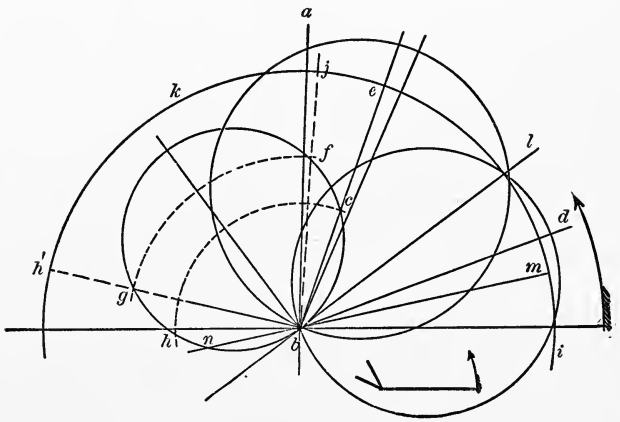

FIG. 92.

cfghb. The cut-off takes place when the distance *bc*, Fig. 92, is equal to *s* of Fig. 91.

Suppose now in Fig. 91 that the blocks *b* and *c* are moved closer together. The distance *s* in Fig. 91 is increased, and in Fig. 92 if *bf* = the new value of *s*, the cut-off now takes place at *bj*. As in a gear of this kind it is convenient to measure the distance between the blocks, let it be $2y$. Let the length of *b* or *c* be *d*, and the distance between the outside edges of the ports be *L*. Then $2s = L - 2d - 2y$.

If it is required to know at what point the blocks should be for any point of cut-off: $2y = L - 2d - 2s$, or $y = \frac{L}{2} - d - s$. Drawing a circle *ijh'*, Fig. 92, with $\frac{L}{2} - d$ as a radius, at any point of cut-off, as *be*, we have $be = \frac{L}{2} - d = y + s$, and $bc = s$, $ce = y$. As the cut-off becomes earlier and earlier

at *bl*, we have $s = 0$ and $y = bl$; and as the cut-off is still earlier as *bm*, s is negative and $= -bn$ and $y = mn$. So that if the value of y is changed, almost any point of cut-off desired can be obtained.

It is to be remembered that the point *g* or *h*, in which the circle with *s* as a radius cuts the relative valve-circle a second time, must not occur before the main valve cuts off, otherwise steam is admitted twice during the same stroke.

143. Designing a Meyer Valve.—In designing a gear of this kind, the main valve is designed for the latest cut-off desired, and the range over which the cut-off valve is intended to act is determined. Suppose in Fig. 93 *cab* to be

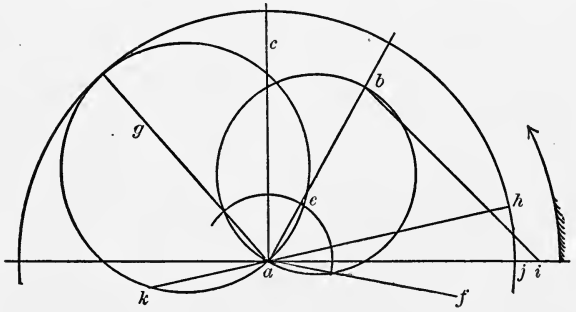

FIG. 93.

the angle of advance of the main valve, *ab* its half-travel, and *ae* the lap. Steam is admitted at *af*, and cut off by the main valve takes place at *ag*. Now suppose it is required to design a Meyer gear to act between *ah* and *ag*. As the cut-off is to range entirely up to that of the main valve, and as we do not want any larger eccentric than is necessary, we will assume that the relative valve-circle centre falls on *ag*.

We will assume further that the engine is intended to run in either direction equally well. That this may be so, the centre of the valve-circle for the cut-off valve should be on *ai*. Through *b* draw *bi* parallel to *ag*. Then *ai* is the eccentricity of the cut-off valve-eccentric, and *bi* is the equivalent of the diameter of the relative valve-circle. We have seen that when *s* is greatest the cut-off is latest, or *s* must be

greatest at *ag*. The blocks can here be close together, or $y = 0$, and we have $\frac{L}{2} - d = s = bi$. When s is least the cut-off is earliest; and we have from the diagram the value of

$$s = -ak = \frac{L}{2} - d - y,$$

or

$$y = +ak + \left(\frac{L}{2} - d\right) = ak + bi = ak + ah = kh.$$

From Fig. 91, $\frac{L}{2} = y + d + s$, or $d + s = \frac{L}{2} - y$.

144. Length of Cut-off Blocks.—The relative valve-motion should never be so great that the left-hand edge of *c* uncovers the left-hand edge of the passage in the right-hand end of the main valve. Calling the port at the top of this passage *e*, we have

$$d + s - r_x > e, \quad \text{or} \quad \frac{L}{2} - y - r_x > e,$$

or

$$\frac{L}{2} > e + y + r_x.$$

Now the greatest value of y is kh, so that $\frac{L}{2}$ should be greater than $e + kh + ah$. This determines the value of $\frac{L}{2}$, and

$$d = \frac{L}{2} - bi,$$

if the blocks are to come together for greatest cut-off. The value of y depends on the desired point of cut-off, and is determined as already shown.

145. Cut-off with Inside Edges.—We have made the valves cut off with the outside edges. By setting the eccentrics properly, the cut-off could have been effected by the inside edges; but any such arrangement is of no advantage, as the main valve and chest are increased in length, and no better distribution of steam is effected.

146. Guinotte Gear.—There are numerous other ways in which the variation of cut-off can be effected with a Polonceau valve or a modification of it, but we will only take up one more. Referring to Fig. 85, as a Gooch link is there used, the centres of the valve-circles move in a line at right angles to *os*, and the centres of the relative valve-circles fall on the line *om*. Now if by any means the centre of the cut-off valve-circle can be made to move at any other angle than a right angle to *os*, the centre of the relative valve-circle will no longer always be on *om*, and a greater variation of cut-off can be obtained. There are two methods by which this can be done, one of which is given here. Fig. 94 represents a Gooch motion similar to Fig. 46, except that the eccentrics are set with unequal angles of advance, and the unequal eccentrics, lengths of eccentric-rods, and unequal parts into which the link is divided at the point of suspension, replace the corresponding equal ones in Fig. 46.

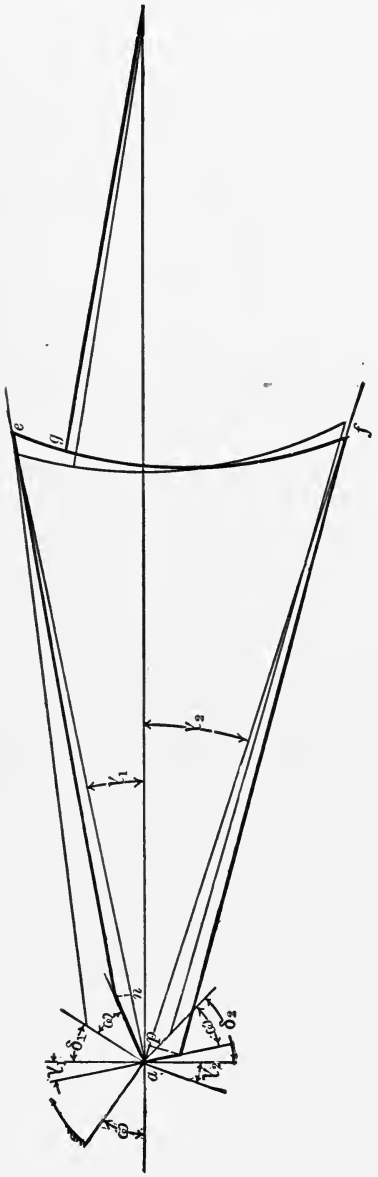

FIG. 94.

147. Movement of the Valve.—We have, as in that case (calling everything pertaining to the upper end of the link sub 1 ($_1$) and to the lower end sub 2 ($_2$) g moves to the right because of the movement of the upper eccentric,

$$\frac{c_2 + u}{c_1 + c_2} r_1 \sin(\omega + \delta_1 + \gamma_1);$$

and because of the movement of the lower eccentric,

$$\frac{c_1 - u}{c_1 + c_2} r_2 \sin(\delta_2 - \omega + \gamma_2);$$

and the total movement of g is therefore the sum of these two, or

$$x = \frac{c_2 + u}{c_1 + c_2} r_1 \sin(\omega + \delta_1 + \gamma_1) + \frac{c_1 - u}{c_1 + c_2} r_2 \sin(\delta_2 - \omega + \gamma_2).$$

This can be expanded as in the case of the Gooch motion, and becomes

$$x = \left\{ \frac{c_2 + u}{c_1 + c_2} r_1 \left(\sin \delta_1 + \frac{c_1}{g_1} \cos \delta_1 \right) + \frac{c_1 - u}{c_1 + c_2} r_2 \left(\sin \delta_2 + \frac{c_2}{g_2} \cos \delta_2 \right) \right\} \cos \omega +$$

$$\left\{ \frac{c_2 + u}{c_1 + c_2} r_1 \left(\cos \delta_1 - \frac{c_1}{g_1} \sin \delta_1 \right) - \frac{c_1 - u}{c_1 + c_2} r_2 \left(\cos \delta_2 - \frac{c_2}{g_2} \sin \delta_2 \right) \right\} \sin \omega;$$

and we have for the valve-diagram

$$x = A \cos \omega + B \sin \omega,$$

in which A and B are given from the preceding equation. The first power of u appears in both of these values, and therefore the centre of the valve-circles moves in a straight line inclined to *os*.

148. To draw the Valve-diagram.—To draw the line of centres a convenient method is as follows: First suppose $u = c_1$; then

$$A_1 = r_1\left(\sin \delta_1 + \frac{c_1}{g_1} \cos \delta_1\right),$$

and

$$B_1 = r_1\left(\cos \delta_1 - \frac{c_1}{g_1} \sin \delta_1\right);$$

which gives the centre of the valve-circle for an ordinary Gooch motion having data r_1, d_1, c_1, and g_1 when $u = c_1$. Now let $u = -c_2$, and we have

$$A_2 = r_2\left(\sin \delta_2 + \frac{c_2}{g_2} \cos \delta_2\right),$$

and

$$B_2 = -r_2\left(\cos \delta_2 - \frac{c_2}{g_2} \sin \delta_2\right),$$

which gives the centre of the valve-circle for an ordinary Gooch motion, with data r_2, d_2, c_2 and g_2 when $u = -c_2$. The line can then be drawn through these points and the points of cut-off for different values of u for the cut-off radius-rod found, the main valve-eccentric having data r and δ.

Fig. 95 shows the construction of the diagram for the main valve and for the cut-off valve when $u = c_1$, $\frac{c_1}{2}$, 0, and $-c_2$. As this form of gear is only of use for engines running in one direction, it is not at all likely to be used to any extent.

QUESTIONS.

175. Sketch a Meyer valve, and explain the method of drawing the valve-diagram.

176. Explain from the diagram the effect of changing the distance between the cut-off blocks.

177. How determine from the diagram the distance between the blocks for any given point of cut-off?

178. If one block is moved farther from the centre than the other, will the cut-off on the two ends be the same? Why? Could such a device be used to make the engine cut-off at exactly the same distance on each end for different points of cut-off?

179. Explain the method of designing a Meyer valve.

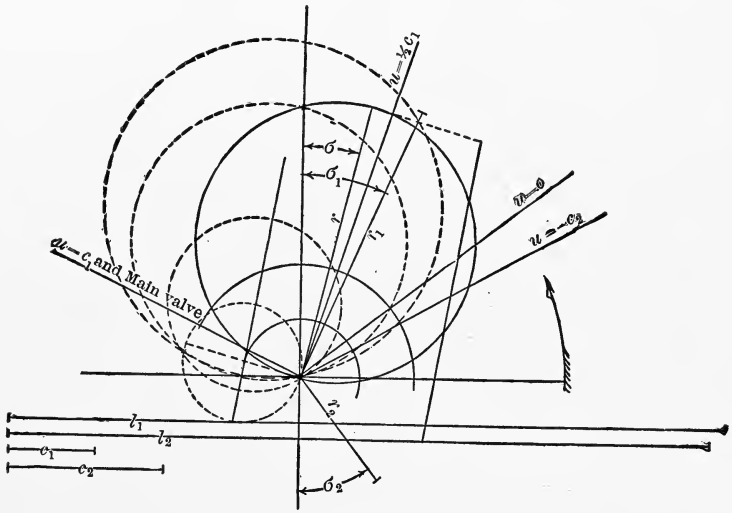

FIG. 95.

180. How determine the width of the blocks and dimensions of the top of the main valve?

181. What would be the advantage in cutting off with the inside edges of the blocks?

182. Make a sketch of the Guinotte gear, and explain how it is used.

183. Deduce the equation to the movement of the cut-off valve.

184. Draw the valve-diagram for different points of cut-off.

PROBLEMS.

70. Given for a Meyer valve, the main valve cuts off at $\frac{3}{4}$ stroke, has an eccentricity of $1\frac{3}{4}$ inches, and the angle of lead is 8°. If the port $e = \frac{3}{4}$ inch, and $r_x = 1\frac{1}{2}$ inches, find the length of the cut-off blocks, L, δ, and r for the cut-off eccentric, and y for cutting off at $\frac{1}{8}$ and $\frac{3}{8}$ stroke, the maximum cut-off with the blocks being at $\frac{3}{4}$ stroke.

71. Given $r = 1\frac{5}{8}$ inches, $\delta = 15°$, $r_1 = 1\frac{7}{8}$ inches, and $\delta_1 = 85°$. Draw the relative valve-circle, and determine the point of cut-off if $s = 1\frac{1}{8}$ inches. If the main valve is moved by a Stephenson's link, in which $g = 60$ inches and $2c = 14$ inches, where is the cut-off for $u = 3$ and 5 inches.

72. Given the stroke 30 inches, connecting-rod 60 inches, r for both valves $2\frac{1}{4}$ inches, $\delta = 30°$, $\delta_1 = 90°$, $L = 17$ inches, $e = 2$ inches, $d = 5\frac{5}{8}$ inches. It is required that the cut-off should take place exactly at $\frac{1}{4}$ stroke and at $\frac{5}{8}$ stroke in each end, what must be the value of y for each block for each point of cut-off.

73. Given for a Guinotte gear $r = 2\frac{3}{4}$ inches, $\delta = 22\frac{1}{2}°$, $r_1 = 2\frac{5}{8}$ inches, $\delta_1 = 30°$, $g_1 = 60$ inches, $c_1 = 4\frac{3}{4}$ inches, $r_2 = 1\frac{3}{4}$ inches, $\delta_2 = 45°$, $g_2 = 50$ inches, and $c_2 = 5\frac{3}{4}$ inches. Draw the valve-diagram, and show the point of cut-off for $u = c_1$, 0, and $-c_2$.

CHAPTER XIX.

BILGRAM, REULEAUX, AND ELLIPTICAL DIAGRAMS.

149. Bilgram Diagram.—Many other diagrams are used to represent the movement of the valve, none of which is as convenient as, and none more accurate than the Zeuner diagram. The simplest of these is the Bilgram diagram, which is represented in Fig. 96.

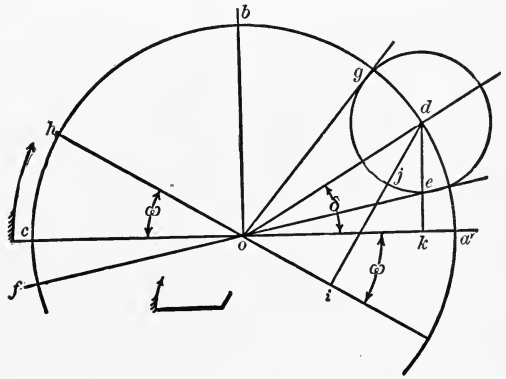

FIG. 96.

Draw *oa* and *ob* at right angles to each other, and with r as a radius draw the circle *chd*.

Lay off the angle *aod* equal to δ, and with *d* as a centre and *l*, the lap, as a radius, draw the lap-circle *ejg*. When the crank has reached the line *oh*, the distance the valve has travelled from its middle position is given by a perpendicular from *d* on *oh*, or the movement of the valve $x = di$, and the opening of the port is *ji*. For $di = od \sin doi = r \sin (\delta + \omega)$.

The port-opening takes place when the crank position is

tangent to the lap-circle as at *of*, and cut-off takes place when the crank position is again tangent to the lap-circle, as at *og*, because in these positions the perpendicular from *d* to the crank line is equal to the lap. Drawing *dk* perpendicular to *oa* gives *dk* equal to the lap plus the lead, as it is the distance the valve has moved from its central position when the crank is on a dead-point, and *ek* is the lead.

150. Problems.—The problems connected with the simple valve can be solved as easily with this diagram as with the Zeuner diagram, and the solution of each is given below.

PROBLEM 1. Given *r*, δ, the point of cut-off, and the point of closing of the exhaust, to find the lap, exhaust-lap, lead, and exhaust-lead, and the greatest possible opening of the port. In Fig. 97 draw *oa* and *ob* at right angles, and draw

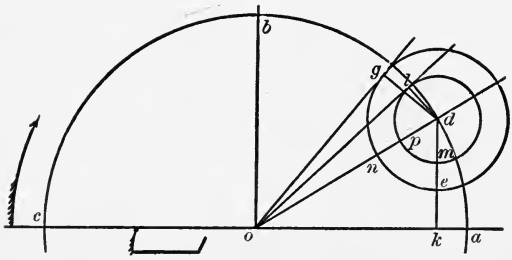

FIG. 97.

the circle *abc*, with *r* as a radius. Lay off $doa = \delta$, *og* for the point of cut-off, and *ol* for the point of closing of the exhaust. Draw *dg* perpendicular to *og*, and *dl* perpendicular to *ol*; then *dg* is the lap and *dl* the exhaust-lap. Draw the lap and exhaust-lap circles; then *ek* is the lead, *mk* is the exhaust-lead, *no* is the greatest opening of the port to steam, and *op* to exhaust.

PROBLEM 2. Given the lap, point of cut-off, and lead, to determine the eccentricity and angular advance.

In Fig. 98 lay off *og* for the point of cut-off, and at any point *k* draw *kd* at right angles to *ao*, and equal to the lap plus the lead. Draw the lap-circle with *d* as a centre, and draw a line *o'g'* parallel to *og* and tangent to the lap-circle;

then, joining d and o', the angle $do'a$ is the angular advance, and do' is the eccentricity.

PROBLEM 3. Given the cut-off, angle of lead, width of

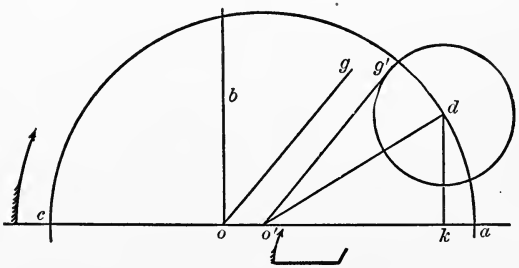

FIG. 98.

port, and the overtravel, to determine the eccentricity, lap, lead, and angular advance.

Lay off og' and of in Fig. 99 to represent the crank at cut-off and at the opening of the port. The centre of the

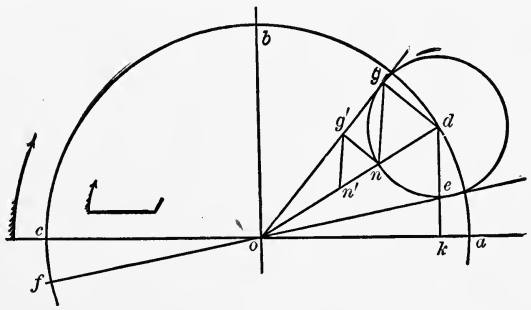

FIG. 99.

lap-circle will lie on the bisector of the angle between og and of produced, or on od. Lay off on equal to the width of the port plus the overtravel, and draw ng', making an angle of 90° with og'. Make nn' equal to ng', draw $n'g'$, and ng parallel to $n'g'$. Draw gd parallel to ng'; and d, the intersection with od, is the centre of the lap-circle. Draw dk parallel to ob; then od is the eccentricity, dg is the lap, ek is the lead, and dok is the angular advance.

PROBLEM 4. Given the point of cut-off, lead, and port-

opening, to determine the angular advance, lap, and eccentricity.

In Fig. 100 lay off *og* to represent the point of cut-off. Draw *ee'* parallel to *oa*, so that *ek* equals the lead.

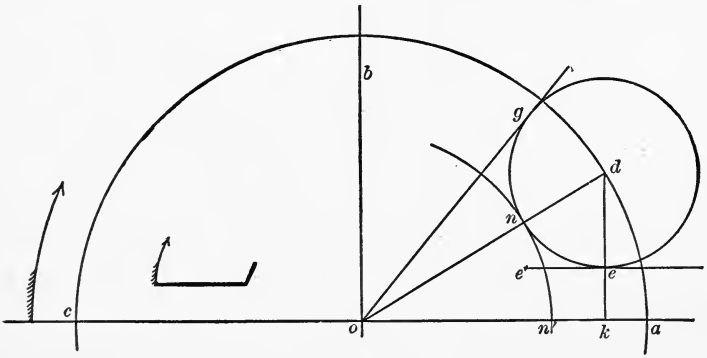

FIG. 100.

Draw an arc *nn'* with the port-opening as a radius. Find by trial such a point *d* that a circle drawn with *d* as a centre will be just tangent to *ee'*, *nn'*, and *og*. *doa* is then the angular advance, *dn* is the lap, and *od* is the eccentricity.

151. Reuleaux's Diagram.—The diagram constructed by Professor Reuleaux is equally convenient for the solution of

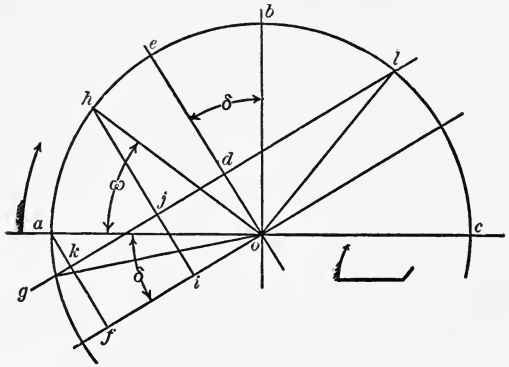

FIG. 101.

most of the problems connected with simple valves. It is represented in Fig. 101. Draw *oa* and *ob* at right angles to

each other, and make *aof* and *boe* equal to δ. Make *od* equal to the lap, and draw *dg* parallel to *of*. Starting from the dead-point *oa* when the crank has moved an angle ω to the position *oh*, the valve has moved a distance *hi* from its central position, *hi* being parallel to *oe*. For

$$hi = oh \sin hoi = r \sin (\delta + \omega).$$

The port-opening is *hj*. The lead is found by drawing *ak* parallel to *oe*, as this is the port-opening when $\omega = 0$. *de* is the maximum port-opening. Cut-off takes place at *ol*, and steam is admitted at *og*.

152. Problems.—The following is the method of solving some of the problems already given for a simple valve by Reuleaux's diagram:

PROBLEM 1. Given *r*, δ, the point of cut-off, to find the lap, lead, and greatest port-opening. Draw *oa* and *ob* at right angles in Fig. 102, and lay off $boe = aof = \delta$. Draw

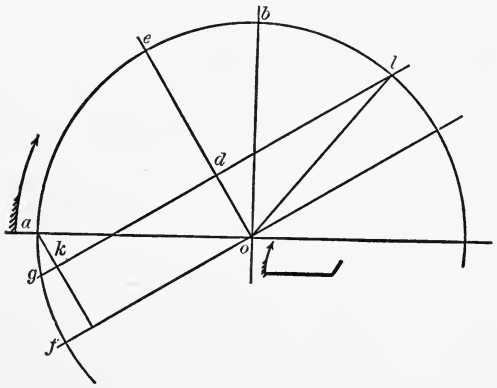

FIG. 102.

the circle *aeb*, with *o* as a centre and *r* as a radius. Lay off *ol* for the point of cut-off. Draw *lg* parallel to *of*, and *ak* parallel to *eo*. Then *od* = lap, *ak* = lead, and *ed* is the greatest port-opening.

PROBLEM 2. Given lap, point of cut-off, and lead, to determine the eccentricity and angular advance.

In Fig. 103 draw ol to represent the point of cut-off. Draw the circle abc with any radius. Make $\frac{am}{mo} = \frac{\text{lead}}{\text{lap}}$. Draw the lines lmg through l and m, and ak and oe at right angles to gl. Then boe is the angular advance, and the figure

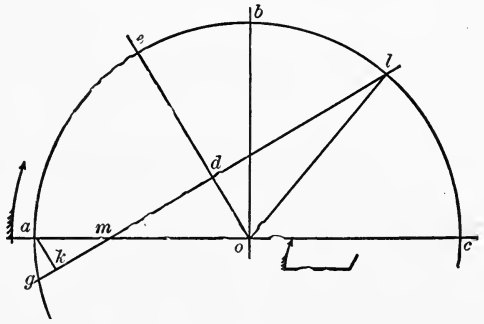

FIG. 103.

is drawn to such a scale that ak represents the lead, or the eccentricity is $\frac{eo \times \text{lead}}{ak}$, or a second diagram can be drawn with dimensions $\frac{\text{lead}}{ak}$ larger than the one in the figure, from which the eccentricity can be directly measured.

PROBLEM 3. Given the cut-off, angle of lead, width of

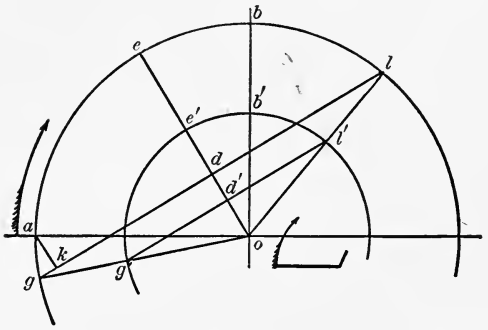

FIG. 104.

port, and overtravel, to determine the eccentricity, lap, lead, and angular advance.

In Fig. 104 lay off ol' for the cut-off and aog' for the angle of lead. Bisect the angle $l'og'$ by oe'; then $b'oe'$ is the angular advance. With any radius as oe', draw $g'e'l'$ and draw $g'l'$. Then as $d'e'$ is to the real port-opening, so is oe' to the real half-travel. Find the half-travel oe, draw the circle *gael*, and the line gl. Then ak is the lead, od the lap, and oe the eccentricity.

153. Elliptical Diagrams.—It is sometimes convenient to represent the movement of the valve as compared with that of the piston on rectangular axes, as shown in Fig. 105.

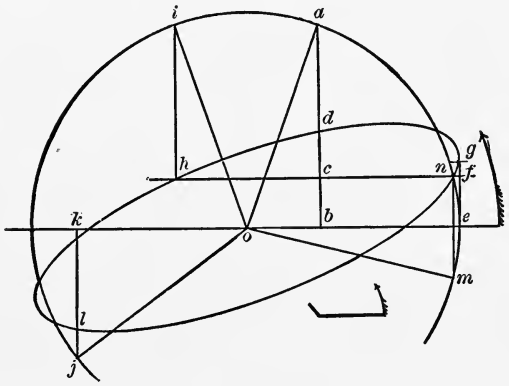

FIG. 105.

When the crank reaches oa the piston has moved a distance $eb. \cdot ob = R \cos \omega$. If on ab we lay off $bd = r \sin (\omega + \delta)$, the locus of d is a curve whose coördinates are

$$y = r \sin (\omega + \delta) \quad \text{and} \quad x = R \cos \omega,$$

which is an ellipse.

If the angularity of the connecting-rod and of the eccentric-rod are taken into account, as they should be to use the diagram satisfactorily, the curve is only approximately an ellipse.

Draw hf parallel to oe so that bc is the lap. Then cd is the opening of the port. At h, where hf cuts the ellipse, draw hi at right angles to oe; then oi is the point of cut-off.

Similarly, from the point *n* determine *om* for the point of admission. The lead is the distance *fg*.

154. Velocity of the Valve.—With the Zeuner diagram the velocity of the valve can be readily determined by a similar circular diagram.

In Fig. 106, if the circle on *ob* is the valve-diagram, draw

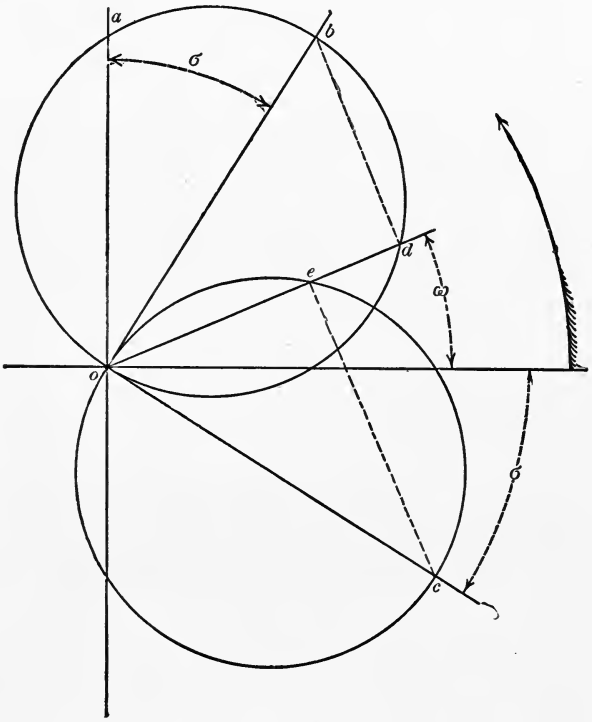

FIG. 106.

oc at right angles to *ob*, and draw an equal circle on *oc* as a diameter. As *od* represents the movement of the valve, *oe* represents the velocity of the valve. For

$$x = r \sin (\omega + \delta),$$

and

$$\frac{dx}{d\omega} = r \cos (\omega + \delta) = oe,$$

from the figure. To find the velocity in inches per second, let n be the number of revolutions of the shaft per minute. Then

$$d\omega = \frac{n \times 2\pi}{60} = \frac{\pi n}{30},$$

and

$$dx = \frac{\pi r n}{30} \cos(\omega + \delta),$$

or multiply oe in the figure by $\frac{\pi n}{30}$.

QUESTIONS.

185. Explain the Bilgram diagram.

186. Explain the Reuleaux diagram.

187. Show how to draw a valve ellipse, and explain it fully.

188. Show how to determine the velocity of the valve, and how to calculate the velocity in feet per second.

PROBLEMS.

Problems 18, 19, 20, 21 can be solved by the methods of this chapter either by the Bilgram or Reuleaux diagram.

74. In Problem 70, how fast is the cut-off valve moving at $\frac{3}{8}$ cut-off if $n = 60$?

75. Given $r = 3\frac{1}{4}$ inches, $\delta = 30°$, lap $= 1\frac{1}{4}$ inches. What is the velocity of the valve in feet per second at $\omega = 0°$, $30°$, $45°$, if the engine makes 120 turns per minute.

CHAPTER XX.

CORLISS VALVE-GEAR.

155. Hamilton-Corliss Engine.—The Corliss engine has four valves, two for steam on the upper side of the cylinder and two for exhaust on the bottom. Fig. 107 is a line diagram of the Hamilton-Corliss engine in the Mechanical Engineering Laboratory of the University of Pennsylvania, and Fig. 108 represents a part section and part outside view of the cylinder.

In Fig. 107 *O* is the centre of the shaft, the crank being on one dead-point at *a*. The eccentric is at *Ob*, the engine turning in the direction of the arrow. The eccentric-rod *bc* takes hold of a pin *c* on a lever *de*, which is pivoted at *d*

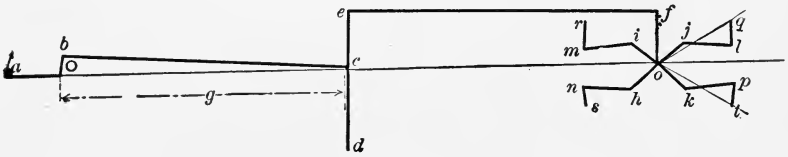

FIG. 107.

on the frame of the engine. From *e* the hook-rod *ef* takes hold of a pin *f* on the wrist-plate (*g*, Fig. 108) pivoted at *o*. This wrist-plate carries four studs, *h*, *i*, *j*, and *k*, each of which drives one of the four valves: through *im* and *jl* the steam-rods, and *hn* and *kp* the exhaust-rods. The valves are driven by spindles *q*, *r*, *s*, and *t*, which are connected to the steam and exhaust rods by the arms *ql*, *rm*, *ns*, and *pt*.

The connection between *ns* and *pt* and the exhaust-valves is a permanent one, while the steam-valves are connected in such a way that they can readily be disengaged from the driving mechanism. The upper right-hand steam-valve connection is shown in Fig. 108. The arm *rm* is carried on a

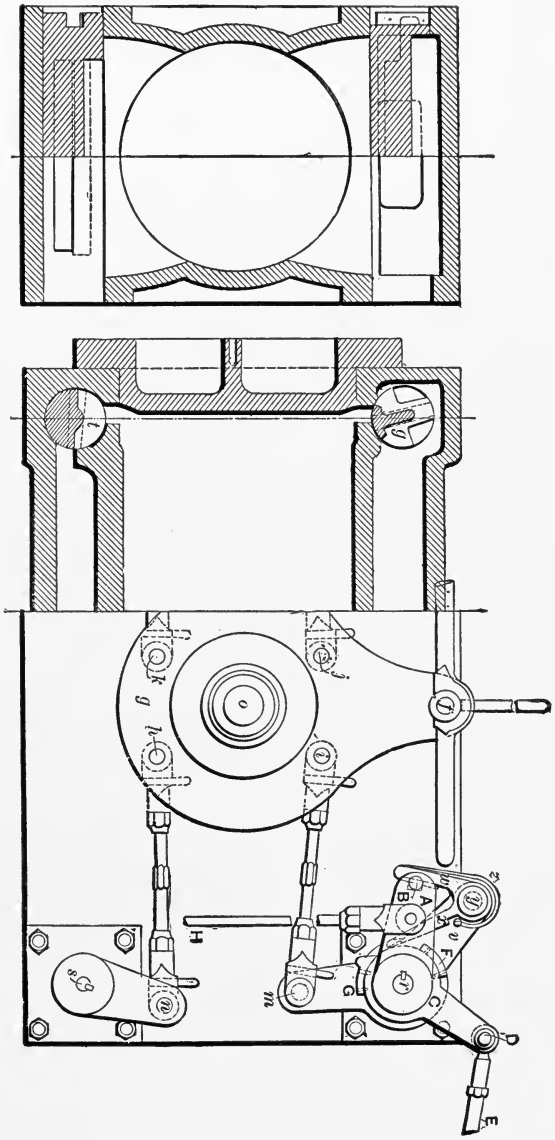

FIG. 108.

loose collar, which also carries the arm v. To this arm is attached the hook wx at the point y. This hook can turn around y, and the arm x in the figure is always kept as far as possible to the right by the spring represented at z. The valve-spindle r carries an arm A, which has at B a pin over which a recess in the hook w catches, and thus moves the arm A and the valve connected to r. C is a second loose collar which is connected at D to the reach-rod DE, which is moved by the governor. The part C carries a cam-piece F, which as the arm v is raised strikes the inner side of the hook-piece x and causes the hook w to disengage the pin B and allows the valve to be closed by means of the rod H, the lower end of which is attached to a dash-pot.

The governor causes the collar C and the cam F to move, thus varying the point at which the hook disengages, and thus varying the cut-off. The cam G is to insure the hook w disengaging, if the arm v travels too far downwards.

156. Movement of the Valve.—The movement of the end b of the eccentric, referring to Fig. 107, is $r \sin(\omega + \delta)$, as for a simple valve. The movement of c is practically the same, and of e is $\frac{de}{dc} r \sin(\omega + \delta)$. The movement of the point f is the same, and the angular movement of of is $\frac{1}{of} \cdot \frac{de}{dc} r \sin(\omega + \delta)$. The distance the point j moves is $\frac{oj}{of} \cdot \frac{de}{dc} r \sin(\omega + \delta)$, and the movement of l is the same as long as oj is to the left of the line og in the figure. But the movement of the valve is less than the distance moved by l, or is $\frac{\text{rad.}}{ql}$ times as much, and consequently the movement of the valve or

$$x = \frac{\text{rad. valve}}{ql} \cdot \frac{oj}{of} \cdot \frac{de}{dc} r \sin(\omega + \delta).$$

The same formula will hold good for the exhaust-valves as

long as any two of the three parts *ok*, *kp*, and *pt* do not nearly form one straight line.

The steam-valves should therefore open on that portion of their motion where *j* is moving away from *oq* and *ql* is approaching it, and the exhaust-valves should open while *k* is moving away from *ot* and *pt* is approaching it.

As in the case of a plain slide-valve, the steam-port opens when the valve has moved from its central position a distance equal to the lap, and if the automatic cut-off does not interfere, closes again at the same point.

Fig. 109 represents the Zeuner diagram for the Corliss engine shown in Fig. 107, and the marks show the actual

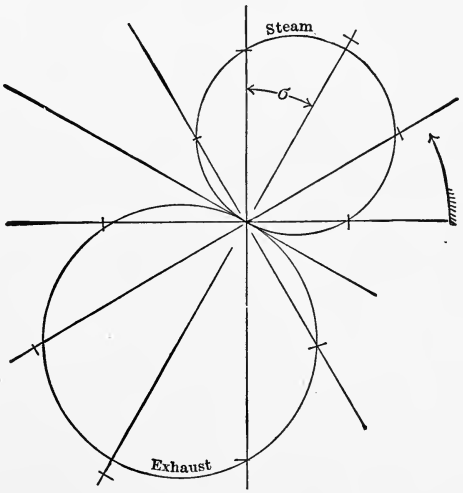

FIG. 109.

movements of the steam and exhaust valves for each 30 degrees of their movement during the acting portion of movement.

157. Proportioning Parts.—The areas of the steam-ports can be determined as already shown under plain slide-valves, and the exhaust-ports should be from $1\frac{1}{2}$ to 2 times the width of the steam-ports. When the wrist-plate is in its middle position the steam-lap varies from $\frac{1}{4}$ inch in the smaller sizes

to $\frac{7}{16}$ or $\frac{1}{2}$ inch in the larger, and the exhaust-port is open from $\frac{1}{16}$ to $\frac{1}{8}$ inch, depending on the size of the engine.

The point *o* is generally, although not necessarily, in the centre between the four valves. The point *d* is on the engine-frame as near the bottom as it can be placed, that the points *c* and *e* may move as nearly as may be parallel to the line of motion of the engine. The length of *de* should be such that the point *e* swings equally above and below the line *Oo*, and when this is the case the distance from *O* to *d* horizontally should be equal to *g*, the length of the eccentric-rod. An eccentric-rod extending from the eccentric to the wrist-plate would be inconveniently long, and would require bracing to keep it stiff enough, and the two rods *bc* and *ef*, of practically equal length, are substituted. The length *de* is sufficient to bring the hook *f* at a convenient height for handling, and otherwise nothing is gained by making *de* or *of* greater or less, as it would be possible to design a gear in which the connection from *b* to *f* should be made by one rod only and give exactly the same distribution of steam.

The throw of the eccentric varies from $3\frac{1}{2}$ to 10 inches, according to the size of the engine, and the distance *of* is from 10 to 12 inches. The diameter of the steam-valves may be made about $\frac{1}{4}$ the diameter of the cylinder.

Referring to the equation giving the movement of the valve, the only other parts to be determined are *ql* and *oj*. If in this equation we put the value of δ, which from the valve-diagram gives the proper lead and port opening, and make $x = \text{lap} + \text{lead}$, and $\omega = 0$, we have a ratio for $\frac{oj}{ql}$ which can be used in determining the length of the remaining parts of the gear.

INDEX.

A

	ART.	PAGE
Admission, Movement of piston during,	17	15
" Period of,	17	14
" Point of,	12	10
Advantages and disadvantages of radial gears,	111	121
Allen link-motion,	72	85
" " Equation to movement of valve,	73	85
" " Valve diagram for,	73	85
" valve,	27	28
Angstrom gear,	109	120
" " Diagram for,	110	121
Angular advance,	13	11
" " Changing, with a Stephenson link,	56	63
" " Effect of changing,	25	25
" " with gridiron valves,	122	132
" " Regulating by changing,	85	98
Armington and Sims governor,	89	101
" " " valve,	28	30

B

Balanced slide-valve,	27	28
Ball engine governor,	90	104
" " valve,	91	105
Bar links,	44	50
Bilgram diagram,	149	157
" " Problems solved by the,	150	158
Bridges, Thickness of,	35	40
Buckeye engine eccentrics and connections,	136	143
" " Movement of valves in,	137	144
" " Varying cut-off in,	139	145
" " governor,	140	146
" " valve,	135	143

C

	ART.	PAGE
Centre of valve travel, To lay down the,	59	67
" To put engine on the,	38	45
Changing angular advance for regulating,	85	98
" eccentricity for regulating,	86	99
Circular diagram for piston position,	34	37
Compression and exhaust, Equalizing,	33	36
" Movement of piston during,	17	15
" Period of,	17	14
Crossed rods,	55	61
Curve of centres for Stephenson link,	47	56
Cut-off, Arrangement for varying, with gridiron valve,	124	135
" blocks of Meyer valve,	142	148
" " " " " Length of,	144	151
" Equalizing,	31	34
" Equalizing, with radial gears,	104	115
" " " Stephenson's link,	57	65
" in Buckeye engine, Varying,	139	145
" Limits of, with gridiron valves,	120	131
" " " Polonceau gear,	133	140
" Point of,	12	11
" valve diagram for Buckeye gear,	138	145
" " Width of gridiron,	125	135
" with gridiron valve, Varying,	123	133

D

Designing a double-ported valve,	26	28
" Fink motion,	82	94
" Gooch motion,	71	82
" Hackworth gear,	97	110
" Marshall gear,	108	119
" Meyer valve,	143	150
" plain slide-valve,	35	40
" " " approximate solution,	36	41
" " " with equalizing lever	37	43
" Stephenson motion,	50	58
Distribution of steam from the diagram,	16	14
Double valve,	115	127
" ported valves,	26	28

E

Eccentricity, Average valves of,	35	40
" Effect of changing,	25	25
" Regulating by changing,	86	99

	ART.	PAGE
Eccentric rod, Length of,	51	58
" Setting the,	39	45
" The,	3	2
" " virtual,	49	58
" To determine the position of the,	24	24
Eccentrics and connections of Buckeye engine,	136	143
Elliptical diagram,	153	163
Equalizing bell-crank leyer,	32	35
" cut-off,	31	34
" " and lead,	32	35
" " with radial gears,	104	115
" " " Stephenson's link,	57	65
" exhaust and compression,	33	36
" lead with Stephenson's link,	56	63
" port opening with radial gears,	103	113
Erie engine governor,	88	100
Error of the Zeuner diagram for the Joy gear,	114	124
" " " " " Marshall gear,	106	117
" " " " " Stephenson gear,	63	70
Exhaust and compression, Equalizing,	33	36
Exhaust lap,	5	4
" lead,	14	12
" Movement of piston during,	17	15
" passages,	1	1
" Period of,	17	14
" ports, Area of,	35	40
" " Width of,	35	40
Expansion, Movement of piston during,	17	15
" Period of,	17	14

F

Fink motion,	74	87
" " Designing a,	82	94
" " Hanger for radius-rod with a,	80	92
" " Lead with a,	75	87
" " movement of valve with a, Equation for,	77	89
" " Radius of link of a,	75	87
" " Setting the eccentric of a,	81	92
" " Suspension of link in a,	76	89
" " Valve diagram for a,	78	91
Four valves,	30	31

G

Gonzenbach valve (see Gridiron),	116	127
Gooch link-motion,	64	75

	ART.	PAGE
Gooch Link-motion applied to Polonceau valve,	131	139
" " Designing a,	71	82
" " Lead with a,	66	78
" " Movement of valve, equation for,	65	76
" " Radius of link in a,	67	78
" " Suspension-rod for a,	68	79
" " The hanger for a,	69	80
" " Valve diagrams for a,	70	80
" " with unsymmetrical parts,	146	152
Governing by changing angular advance,	85	98
" " eccentricity,	86	99
" " " and angular advance,	87	99
Governor, Armington and Sims,	89	101
" Ball engine,	90	104
" Buckeye engine,	140	146
" Erie engine,	88	100
Governors, Throttling,	84	98
Gridiron valves,	116	127
" " Angle of advance with,	122	132
" " Arrangement for varying cut-off with,	124	135
" " Combined diagrams for,	119	130
" " Diagrams for,	118	129
" " Limits of cut-off with,	120	131
" " Varying cut-off with,	123	133
" " " width of cut-off valve,	126	135
" " width of cut-off valve,	125	135
" " Width of ports with,	121	132
Guinotte gear,	146	152
" " Movement of valve with,	147	153
" " Valve diagram for,	148	154

H

Hackworth gear,	93	107
" " attaching valve-stem outside,	102	113
" " Connecting up a,	101	113
" " Designing a,	97	110
" " Equation to movement of valve with,	95	108
" " Error in Zeuner diagram for,	99	111
" " Valve diagram for,	96	109
" " Variation in port opening with,	100	113
Hanger for radius-rod, Fink motion,	80	92
" " Gooch motion,	69	80
" Stephenson's link,	53	59

J

	ART.	PAGE
Joy gear, The,	112	121
" " Equation to movement of valve with,	113	123

L

Lap,	5	4
" Average values of,	35	40
" different on the two ends of valve,	31	34
" Effect of changing,	25	25
Lead,	14	12
" and cut-off, Equalizing,	32	35
" Average values of,	35	40
" Equalizing, with Stephenson's link,	56	63
" with Fink motion,	75	87
" " Gooch motion,	66	78
" " radial gears,	94	108
Length of eccentric rod,	51	58
" " link,	52	59
" " valve stem,	51	58
Link block, Slip of,	42	48
" Length of,	52	59
" motion, Allen,	72	85
" " Fink,	74	87
" " Gooch,	64	75
" " Reducing slip in a,	62	70
" " Stephenson's,	40	47
" " To determine centre of suspension of hanger,	60	68
" " To lay down a,	58	67
" " To lay down centre of travel of valve,	59	67
Link motions,	40	47
" Radius of Fink,	75	87
" " Gooch,	67	78
" " Stephenson's,	43	50
" Stephenson's, Point of suspension of,	41	48
Links, Kinds of,	44	50

M

Marshall gear,	105	117
" " Designing a,	108	119
" " Equation to movement of valve with a,	105	117
" " Proportions of,	107	119
Meyer valve,	141	148
" " Changing distance between block of a,	142	148
" " Cutting off with inside edges,	145	151

	ART.	PAGE
Meyer valve Designing a,	143	150
" " Length of cut-off blocks of,	144	151
Movement of upper end of hanger, Stephenson's link,	53	59
Movement of valve, Equation for the, with Buckeye gear,	137	144
" " " " " Fink gear,	77	89
" " " " " Gooch gear,	65	76
" " " " " Hackworth gear,	95	108
" " " " " Joy gear,	113	123
" " " " " Marshall gear,	105	117
" " " " " single eccentric,	9	7
" " " " " Stephenson gear,	45	52

O

Opening of port,	12	10
Open rods,	55	61
Over-travel,	18	19

P

Piston movement, Circular diagram for,	34	37
Piston valves,	28	30
Point of suspension of link,	41	48
Polonceau gear,	131	139
" " Limits of cut-off with,	133	140
" " Valve diagram for,	132	139
" valve,	117	128
" "	130	139
" " Dimensions of,	134	141
Porter-Allen engine, regulating a,	83	95
" motion,	83	94
" " radius of link,	83	95
" valves,	30	31
Port opening, Equalizing, with radial gears,	103	113
" " variable in Hackworth gear,	100	113
Ports, area of,	35	40
" Width of, with gridiron valve,	121	132
Position of stud on Stephenson's link,	61	68
Put engine on centre, to,	38	45

R

Radial gears,	92	107
" " advantages and disadvantages of,	111	121
" " Angstrom's,	109	120
" " Definition of right-hand rotation with,	98	111
" " Hackworth's,	93	107

	ART.	PAGE
Radial gears, Lead of valve with,	94	108
" " Joy's,	112	121
" " Marshall's,	105	117
Radius of link, Changing, for Stephenson's gear,	56	65
" " Fink motion,	75	87
" " Gooch motion,	67	78
" " Porter-Allen motion,	83	95
" " Stephenson motion,	43	50
Reducing slip,	62	70
Relative movement of two valves,	127	137
" valve circle,	128	138
" " " To draw the,	129	138
Reuleaux diagram,	151	160
" " Solution of problems by the,	152	161
Reverse lever, effect on movement,	23	24
" " To design equalizing,	37	43
S		
Setting the eccentric,	39	45
" " " with a Fink motion,	81	92
Slip of the link-block,	42	48
" Reducing,	62	70
Steam inside the valve, Taking,	29	30
" lap,	5	4
" passages,	1	1
" ports,	1	1
" " Area of,	35	40
Stephenson link-motion,	40	47
" " Changing radius of link,	56	65
" " Curve of centres,	47	56
" " Designing a,	50	58
" " Equalizing cut-off with a,	57	65
" " Equalizing lead with a,	56	63
" " Equation to movement of valve with,	45	52
" " Error of Zeuner diagram for,	63	70
" " Hanger for link of,	53	59
" " To lay down a,	58	67
" " To draw valve diagram for,	48	57
" " Valve diagram for,	46	55
Stephenson link, Point of suspension of,	41	48
" " Position of stud on a,	61	68
" " Radius of,	43	50
" " suspended at bottom, Hanger for,	54	60
" " " centre of chord, Hanger for,	54	60
" " with crossed rods,	55	61
Straight link,	72	85

T

		PAGE
Throttling governors,	84	98
Trick valve,	27	28
Two valves,	30	31

V

Valve, Allen or Trick,	27	28
" Armington and Sims,	28	30
" Balanced slide,	27	28
" Ball engine,	91	105
" circle, Relative,	128	138
" " To draw the relative,	129	138
" D slide	1	1
" " method of action of,	2	2
" " movement of,	7	5
" Designing a plain slide,	35	40
" " " approximate solution,	36	41
" " " with equalizing lever,	37	43
" diagrams,	9	6
" " Bilgram,	149	157
" " Buckeye engine,	138	145
" " Elliptical,	153	163
" " Error in, for Hackworth gear,	99	111
" " " " Stephenson gear,	63	70
" " " " Joy gear,	114	124
" " " " Marshall gear,	106	117
" " for a given engine, To draw,	15	13
" " " Allen motion,	73	85
" " " Angstrom gear,	110	121
" " " each end of the cylinder,	17	14
" " " Fink motion,	78	91
" " " Gooch motion,	70	80
" " " gridiron valves,	118	129
" " " " Combined,	119	130
" " " Guinotte gear,	148	154
" " " Hackworth gear,	96	109
" " " Poloncceau gear,	132	139
" " " Stephenson gear,	46	55
" " " " To draw,	48	56
" " Reuleaux,	151	160
" " when $\delta = 0$,	10	7
" " Zeuner,	9	6
" " "	11	10
" Dimensions of Polonceau,	134	141
" Double,	115	127

	ART.	PAGE
Valve, Double ported,	26	28
" Equation for movement of a	9	7
" " " with angular advance,	13	11
" face,	4	3
" " not parallel with piston travel,	23	23
" for Ball engine,	91	105
" for Buckeye engine,	135	143
" Gridiron or Gonzenbach,	116	127
" gear, Guinotte,	146	152
" " Polonceau,	131	139
" Meyer,	141	148
" Piston,	28	30
" Plain slide,	1	1
" Polonceau,	117	128
" "	130	139
" Porter-Allen,	30	31
" Position of, for any position of piston,	6	4
" seat,	4	3
" Setting the,	39	45
" stem, Length of,	51	58
" " To adjust the,	39	45
" Velocity of movement of,	154	164
Virtual eccentric, The,	49	58

Y

Yoke connection,	8	5

SHORT-TITLE CATALOGUE

OF THE

PUBLICATIONS

OF

JOHN WILEY & SONS, Inc.

NEW YORK

London: CHAPMAN & HALL, Limited

Montreal, Can.: RENOUF PUB. CO.

ARRANGED UNDER SUBJECTS

Descriptive circulars sent on application. Books marked with an asterisk (*) are sold at *net* prices only. All books are bound in cloth unless otherwise stated.

AGRICULTURE—HORTICULTURE—FORESTRY.

ARMSBY—Principles of Animal Nutrition 8vo, $4 00
BOWMAN—Forest Physiography 8vo, *5 00
BRYANT—Hand Book of Logging 8vo, *3 50
BUDD and HANSEN—American Horticultural Manual:
Part I. Propagation, Culture, and Improvement 12mo, 1 50
Part II. Systematic Pomology 12mo, 1 50
CHAPMAN—Forest Valuations ..... (*In Preparation.*)
ELLIOTT—Engineering for Land Drainage 12mo, 2 00
Practical Farm Drainage. (Second Edition, Rewritten) 12mo, 1 50
FULLER—Domestic Water Supplies for the Farm 8vo, *1 50
GRAHAM—Text-book on Poultry ..... (*In Preparation.*)
Manual on Poultry (Loose Leaf Lab. Manual) ..... (*In Preparation.*)
GRAVES—Forest Mensuration 8vo, 4 00
Principles of Handling Woodlands ..... Small 8vo, *1 50
GREEN—Principles of American Forestry 12mo, 1 50
GROTENFELT—Principles of Modern Dairy Practice. (WOLL.) 12mo, 2 00
HAWLEY and HAWES—Forestry in New England 8vo, *3 50
HERRICK—Denatured or Industrial Alcohol 8vo, *4 00
HIRSHFELD and ULBRICHT—Gas Engines for the Farm ..... Small 8vo, *1 50
HOWE—Agricultural Drafting ..... oblong quarto, *1 25
Reference and Problem Sheets to accompany Agricultural Drafting, each *0 20
KEITT—Agricultural Chemistry Text-book ..... (*In Preparation.*)
Laboratory and Field Exercises in Agricultural Chemistry (*In Preparation.*)
KEMP and WAUGH—Landscape Gardening. (New Edition, Rewritten) . 12mo, *1 50
LARSEN—Exercises in Dairying (Loose Leaf Field Manual) ..... 4to, paper, *1 00
Single Exercises each *0 02
and WHITE—Dairy Technology ..... Small 8vo, *1 50
LEVISON—Studies of Trees, Loose Leaf Field Manual, 4to, pamphlet form, Price from 5-15 cents net, each, according to number of pages.
MCCALL—Crops and Soils (Loose Leaf Field Manual) ..... (*In Preparation.*)
Soils (Text-book) ..... (*In Preparation.*)
MCKAY and LARSEN—Principles and Practice of Butter-making 8vo, *1 50
MAYNARD—Landscape Gardening as Applied to Home Decoration ... 12mo, 1 50
MOON and BROWN—Elements of Forestry ..... (*In Preparation.*)
RECORD—Identification of the Economic Woods of the United States ... 8vo, *1 25

RECKNAGEL—Theory and Practice of Working Plans (Forest Organization).....8vo, *$2 00
SANDERSON—Insect Pests of Farm, Garden, and Orchard.....Small 8vo, *3 00
and PEAIRS—Injurious Insects.....(*In Preparation.*)
Studies in Insects.....(*In Preparation.*)
SCHWARZ—Longleaf Pine in Virgin Forest.....12mo, *1 25
SOLOTAROFF—Field Book for Street-tree Mapping.....12mo, *0 75
In lots of one dozen.....*8 00
Shade Trees in Towns and Cities.....8vo, *3 00
STOCKBRIDGE—Rocks and Soils.....8vo, 2 50
WINTON—Microscopy of Vegetable Foods.....Large 8vo, 7 50
WOLL—Handbook for Farmers and Dairymen.....16mo, 1 50
YEAW—Exercises on Market Gardening (Loose Leaf Field Manual).
(*In Preparation.*)

ARCHITECTURE.

ATKINSON—Orientation of Buildings or Planning for Sunlight.....8vo, *2 00
BALDWIN—Steam Heating for Buildings.....12mo, 2 50
BERG—Buildings and Structures of American Railroads.....4to, 5 00
BIRKMIRE—Architectural Iron and Steel.....8vo, 3 50
Compound Riveted Girders as Applied in Buildings.....8vo, 2 00
Planning and Construction of High Office Buildings.....8vo, 3 50
Skeleton Construction in Buildings.....8vo, 3 00
BRIGGS—Modern American School Buildings.....8vo, 4 00
BYRNE—Inspection of Materials and Workmanship Employed in Construction.....16mo, 3 00
CARPENTER—Heating and Ventilating of Buildings.....8vo, 4 00
CORTHELL—Allowable Pressure on Deep Foundations.....12mo, *1 25
ECKEL—Building Stones and Clays.....8vo, *3 00
FREITAG—Architectural Engineering.....8vo, 3 50
Fire Prevention and Fire Protection.....16mo, mor., *4 00
Fireproofing of Steel Buildings.....8vo, 2 50
GERHARD—Guide to Sanitary Inspections.....12mo, 1 50
Modern Baths and Bath Houses.....8vo, *3 00
Sanitation of Public Buildings.....12mo, 1 50
Theatre Fires and Panics.....12mo, 1 50
The Water Supply, Sewerage and Plumbing of Modern City Buildings, 8vo, *4 00
GREENBERG and HOWE—Architectural Drafting.....oblong quarto, *1 50
GREENE—Elements of Heating and Ventilation.....8vo, *2 50
HOWE—Agricultural Drafting.....oblong quarto, *1 25
Reference and Problem Sheets to accompany Agricultural Drafting, each, *0 02
JOHNSON—Statics by Algebraic and Graphic Methods.....8vo, 2 00
KELLAWAY—How to Lay Out Suburban Home Grounds.....8vo, 2 00
KIDDER—Architects' and Builders' Pocket-book.....16mo, mor., 5 00
MERRILL—Stones for Building and Decoration.....8vo, 5 00
MONCKTON—Stair-building.....4to, 4 00
PATTON—Practical Treatise on Foundations.....8vo, 5 00
PEABODY—Naval Architecture.....8vo, 7 50
RICE—Concrete-block Manufacture.....8vo, 2 00
RICHEY—Handbook for Superintendents of Construction.....16mo, mor., 4 00
Building Foreman's Pocket Book and Ready Reference....16mo, mor., 5 00
Building Mechanics' Ready Reference Series: *
Carpenters' and Woodworkers' Edition.....16mo, mor., *1 50
Cement Workers' and Plasterers' Edition.....16mo, mor., *1 50
Plumbers', Steam-Fitters', and Tinners' Edition.....16mo, mor., *1 50
Stone- and Brick-masons' Edition.....16mo, mor., *1 50
RIES—Building Stones and Clay Products.....8vo, *3 00
SABIN—House Painting (Glazing, Paper Hanging and Whitewashing).12mo, 1 00
SIEBERT and BIGGIN—Modern Stone-cutting and Masonry.....8vo, 1 50
SNOW—Principal Species of Wood.....8vo, 3 50
WAIT—Engineering and Architectural Jurisprudence.....8vo, 6 00
Sheep, 6 50
Law of Contracts.....8vo, 3 00
Law of Operations Preliminary to Construction in Engineering and Architecture.....8vo, 5 00
Sheep, 5 50

WILSON—Air Conditioning.....12mo, $1 50
WORCESTER and ATKINSON—Small Hospitals, Establishment and Maintenance, Suggestions for Hospital Architecture, with Plans for a Small Hospital.....12mo, 1 25

ASSAYING.

BETTS—Lead Refining by Electrolysis.....8vo, 4 00
FLETCHER—Practical Instructions in Quantitative Assaying with the Blowpipe.....16mo, mor., 1 50
FURMAN and PARDOE—Manual of Practical Assaying.....8vo, 3 00
LODGE—Notes on Assaying and Metallurgical Laboratory Experiments.8vo, 3 00
LOW—Technical Methods of Ore Analysis. Sixth Edition, Revised....8vo, 3 00
MILLER—Cyanide Process.....12mo, 1 00
Manual of Assaying.....12mo, 1 00
MINET—Production of Aluminum and its Industrial Use. (WALDO.)..12mo, 2 50
PRICE and MEADE—The Technical Analysis of Brass and the Non-Ferrous Alloys.....12mo, *2 00
RICKETTS and MILLER—Notes on Assaying.....8vo, 3 00
ROBINE and LENGLEN—Cyanide Industry. (LE CLERC.).....8vo, 4 00
SEAMON—Manual for Assayers and Chemists.....Small 8vo, *2 50
ULKE—Modern Electrolytic Copper Refining.....8vo, 3 00
WILSON—Cyanide Processes.....12mo, 1 50

ASTRONOMY.

COMSTOCK—Field Astronomy for Engineers.....8vo, 2 50
CRAIG—Azimuth.....4to, 3 50
CRANDALL—Text-book on Geodesy and Least Squares.....8vo, 3 00
DOOLITTLE—Treatise on Practical Astronomy.....8vo, 4 00
HAYFORD—Text-book of Geodetic Astronomy.....8vo, 3 00
HOSMER—Azimuth.....16mo, mor., 1 00
Text-book on Practical Astronomy.....8vo, *2 00
MERRIMAN—Elements of Precise Surveying and Geodesy.....8vo, 2 50
MICHIE and HARLOW—Practical Astronomy.....8vo, *3 00
RUST—Ex-meridian Altitude, Azimuth and Star-Finding Tables.....8vo, 5 00
WHITE—Elements of Theoretical and Descriptive Astronomy.....12mo, *2 00

BIOLOGY.

COHNHEIM—Enzymes.....12mo, *1 50
DAVENPORT—Statistical Methods with Special Reference to Biological Variation. Third Edition, Revised.....16mo, mor., 1 50
EFFRONT and PRESCOTT—Enzymes and Their Applications.....8vo, 3 00
EULER and POPE—General Chemistry of the Enzymes.....8vo, *3 00
MAST—Light and Behavior of Organisms.....8vo, *2 50
PRESCOTT and WINSLOW—Elements of Water Bacteriology, with Special Reference to Sanitary Water Analysis. Third Edition, Rewritten. Small 8vo, *1 75
WARD and WHIPPLE—Freshwater Biology.....(*In Press.*)
WHIPPLE—The Microscopy of Drinking Water.....8vo, 3 50
WINSLOW—The Systematic Relationship of the Coccaceæ.....Small 8vo, 2 50

CHEMISTRY.

ABDERHALDEN—Physiological Chemistry in Thirty Lectures. (HALL and DEFREN.).....8vo, *5 00
ABEGG—Theory of Electrolytic Dissociation. (VON ENDE.).....12mo, *1 25
ALEXEYEFF—General Principles of Organic Syntheses. (MATTHEWS.)..8vo, 3 00

ALLEN (C. M.)—Exercises in General Chemistry, (Loose Leaf Laboratory Manual).....Oblong 4to, paper, *$1 00
Single Exercises, each..... *0 02
Exercises in Quantitative Analysis (Loose Leaf Laboratory Manual). 4to, paper, *1 00
Single Analyses from 2–15 cents net, each, according to number of pages.
ALLEN (J. A.)—Tables for Iron Analysis.....8vo, 3 00
ARMSBY—Principles of Animal Nutrition.....8vo, 4 00
ARNOLD—Compendium of Chemistry. (MANDEL.).....Small 8vo, 3 50
AUNGST—Technical Chemical Analysis (Loose Leaf Laboratory Manual). 4to, paper, *0 85
Single Analyses from 2–10 cents net, each, according to number of pages.
BERNADOU—Smokeless Powder.—Nitro-cellulose, and Theory of the Cellulose Molecule.....12mo, 2 50
BILTZ—Introduction to Inorganic Chemistry. (HALL and PHELAN.)..12mo, *1 25
Laboratory Methods of Inorganic Chemistry. (HALL and BLANCHARD.) 8vo, 3 00
BINGHAM and WHITE—Laboratory Manual of Inorganic Chemistry....12mo, *1 00
BIVINS—Exercises in Qualitative Chemical Analysis (Loose Leaf Lab. Manual).....4to, paper, including work sheet, *1 00
Single Analyses 5, 10 and 15 cents net, each, according to number of pages.
Single work sheets, each..... *0 01
BLANCHARD—Synthetic Inorganic Chemistry.....12mo, *1 00
BOTTLER—German and American Varnish Making. (SABIN.)... Small 8vo, *3 50
BROWNE—Handbook of Sugar Analysis.....8vo, *6 00
Sugar Tables for Laboratory Use.....8vo, *1 25
BROWNING—Introduction to the Rarer Elements.....8vo, *1 50
BRUNSWIG—Explosives. (MUNROE and KIBLER.).....Small 8vo, *3 00
CHAMOT—Microchemical Methods.....(*In Preparation*).
CLAASSEN—Beet-sugar Manufacture. (HALL and ROLFE.).....8vo, *3 00
CLASSEN—Quantitative Analysis by Electrolysis. (HALL.).....8vo, *2 50
COHN—Indicators and Test-papers.....12mo, 2 00
Tests and Reagents.....8vo, 3 00
COOPER—Constitutional Analysis by Physico-chemical Methods (Inorganic). (*In Preparation.*)
DANNEEL—Electrochemistry. (MERRIAM.).....12mo, *1 25
DANNERTH—Methods of Textile Chemistry.....12mo, 2 00
DUHEM—Thermodynamics and Chemistry. (BURGESS.).....8vo, 4 00
EISSLER—Modern High Explosives.....8vo, 4 00
EKELEY—Laboratory Manual of Inorganic Chemistry.....12mo, *1 00
FLETCHER—Practical Instructions in Quantitative Assaying with the Blowpipe.....16mo, mor., 1 50
FOWLER—Sewage Works Analyses.....12mo, 2 00
FRESENIUS—Manual of Qualitative Chemical Analysis. (WELLS.).....8vo, 5 00
Manual of Qualitative Chemical Analysis. Part I. Descriptive. (WELLS.).....8vo, 3 00
Quantitative Chemical Analysis. (COHN.) 2 vols.....8vo, 12 50
When Sold Separately, Vol. I, $6. Vol. II, $8.
FUERTES—Water and Public Health.....12mo, 1 50
FULLER—Qualitative Analysis of Medicinal Preparations.....12mo, *1 50
FURMAN and PARDOE—Manual of Practical Assaying.....8vo, 3 00
GETMAN—Exercises in Physical Chemistry.....12mo, *2 00
Outlines of Theoretical Chemistry.....Small, 8vo, *3 50
GILDEMEISTER and HOFFMANN—The Volatile Oils. Second Edition....8vo, 5 00
GILL—Gas and Fuel Analysis for Engineers.....12mo, 1 25
GOOCH—Methods in Chemical Analysis.....8vo, *4 00
and BROWNING—Outlines of Qualitative Chemical Analysis.. Small 8vo. *1 25
GROTENFELT—Principles of Modern Dairy Practice. (WOLL.).....12mo, 2 00
GROTH—Introduction to Chemical Crystallography. (MARSHALL.)...12mo, 1 25
HAMMARSTEN—Text-book of Physiological Chemistry. (MANDEL.)....8vo, *4 00
HANAUSEK—Microscopy of Technical Products. (WINTON.).....8vo, 5 00
HASKINS—Organic Chemistry.....12mo, *2 00
HERRICK—Denatured or Industrial Alcohol.....8vo, *4 00
HINDS—Inorganic Chemistry.....8vo, 3 00
Laboratory Manual for Students.....12mo, *1 00
HOLLEMAN—Laboratory Manual of Organic Chemistry for Beginners. (WALKER.) Second Edition, Revised.....12mo, *1 00

HOLLEMAN—Text-book of Inorganic Chemistry. (COOPER.)....8vo, $2 50
Text-book of Organic Chemistry. (WALKER and MOTT.) Fourth Edition, Revised....8vo, 2 50
HOLLEY—Analysis of Paint and Varnish Products....Small, 8vo, *2 50
Lead and Zinc Pigments....Small 8vo, *3 00
HOPKINS—Oil-chemists' Handbook....8vo, 3 00
JACKSON—Directions for Laboratory Work in Physiological Chemistry..8vo, 1 25
JOHNSON—Rapid Methods for the Chemical Analysis of Special Steels, Steel-making Alloys and Graphite. Second Edition. Rewritten...8vo, *3 00
KEITH—Agricultural Chemistry....(*In Preparation.*)
LANDAUER—Spectrum Analysis. (TINGLE.)....8vo, 3 00
LASSAR-COHN—Application of Some General Reactions to Investigations in Organic Chemistry. (TINGLE.)....12mo, 1 00
LEACH-WINTON—Food Inspection and Analysis. Third Edition. Rewritten by Dr. Andrew L. Winton....8vo, 7 50
LÖB—Electrochemistry of Organic Compounds. (LORENZ.)....8vo, 3 00
LODGE—Notes on Assaying and Metallurgical Laboratory Experiments..8vo, 3 00
LOW—Technical Method of Ore Analysis. Sixth Edition, Revised....8vo, 3 00
LOWE—Paint for Steel Structures....12mo, 1 00
LUNGE—Techno-chemical Analysis. (COHN.)....12mo, 1 00
MCKAY and LARSEN—Principles and Practice of Butter-making....8vo, *1 50
MAIRE—Modern Pigments and their Vehicles....12mo, 2 00
MARTIN—Laboratory Guide to Qualitative Analysis with the Blowpipe. 12mo, *0 60
MASON—Examination of Water. (Chemical and Bacteriological.)....12mo, 1 25
Water-supply. (Considered Principally from a Sanitary Standpoint.) 8vo, 4 00
MATHEWSON—First Principles of Chemical Theory....8vo, *1 00
MATTHEWS—Laboratory Manual of Dyeing and Textile Chemistry....8vo, 3 50
Textile Fibres. Third Edition. Rewritten....8vo, *4 00
MEYER—Determination of Radicles in Carbon Compounds. (TINGLE.) Third Edition....12mo, *1 25
MILLER—Cyanide Process....12mo, 1 00
Manual of Assaying....12mo, 1 00
MINET—Production of Aluminum and its Industrial Use. (WALDO.)..12mo, 2 50
MITTELSTAEDT—Technical Calculations for Sugar Works. (BOURBAKIS.) 12mo, *1 50
MIXTER—Elementary Text-book of Chemistry....12mo, 1 50
MORGAN—Elements of Physical Chemistry....12mo, 3 00
Physical Chemistry for Electrical Engineers....12mo, *1 50
MOORE—Experiments in Organic Chemistry....12mo, *0 50
Outlines of Organic Chemistry....12mo, *1 50
MORSE—Calculations used in Cane-sugar Factories....16mo, mor., 1 50
MUIR—History of Chemical Theories and Laws....8vo, *4 00
MULLIKEN—General Method for the Identification of Pure Organic Compounds. Vol. I. Compounds of Carbon with Hydrogen and Oxygen....Large 8vo, 5 00
Vol. II. Nitrogenous Compounds....(*In Preparation.*)
Vol. III. The Commercial Dyestuffs....Large 8vo, 5 00
NELSON—Analysis of Drugs and Medicines....12mo, *3 00
OSTWALD—Conversations on Chemistry. Part One. (RAMSEY.)....12mo, 1 50
Part Two. (TURNBULL.).12mo, 2 00
Introduction to Chemistry. (HALL and WILLIAMS.)....Small 8vo, *1 50
OWEN and STANDAGE—Dyeing and Cleaning of Textile Fabrics....12mo, 2 00
PALMER—Practical Test Book of Chemistry....12mo, *1 00
PAULI—Physical Chemistry in the Service of Medicine. (FISCHER.)..12mo, *1 25
PICTET—Alkaloids and their Chemical Constitution. (BIDDLE.)....8vo, 5 00
PRESCOTT and WINSLOW—Elements of Water Bacteriology, with Special Reference to Sanitary Water Analysis. Third Edition, Rewritten. Small 8vo, *1 75
REISIG—Guide to Piece-Dyeing....8vo, *25 00
RICHARDS and WOODMAN—Air, Water, and Food from a Sanitary Standpoint....8vo, 2 00
RICKETTS and MILLER—Notes on Assaying....8vo, 3 00
RIDEAL—Disinfection and the Preservation of Food....8vo, 4 00
RIGGS—Elementary Manual for the Chemical Laboratory....8vo, 1 25
ROBINE and LENGLEN—Cyanide Industry. (LE CLERC.)....8vo, 4 00

ROGERS—Exercises in Industrial Chemistry (Loose Leaf Laboratory Manual). (*In Preparation.*)
RUDDIMAN—Incompatibilities in Prescriptions....8vo, $2 00
Whys in Pharmacy....12mo, 1 00
RUER—Elements of Metallography. (MATHEWSON.)....8vo, *3 00
SABIN—Industrial and Artistic Technology of Paint and Varnish....8vo, 3 00
SALKOWSKI—Physiological and Pathological Chemistry. (ORNDORFF.)....8vo, 2 50
SCHIMPF—Essentials of Volumetric Analysis....Small 8vo, *1 50
Manual of Volumetric Analysis....8vo, 5 00
Qualitative Chemical Analysis....8vo, *1 25
SEAMON—Manual for Assayers and Chemists....Small 8vo, *2 50
SMITH—Lecture Notes on Chemistry for Dental Students....8vo, *2 50
SPENCER—Handbook for Cane Sugar Manufacturers....16mo, mor., 3 00
Handbook for Chemists of Beet-sugar Houses....16mo, mor., 3 00
STOCKBRIDGE—Rocks and Soils....8vo, 2 50
STONE—Practical Testing of Gas and Gas Meters....8vo, 3 50
TILLMAN—Descriptive General Chemistry....8vo, *3 00
Elementary Lessons in Heat....8vo, *1 50
TREADWELL—Qualitative Analysis. (HALL.)....8vo, 3 00
Quantitative Analysis. (HALL.)....8vo, 4 00
TURNEAURE and RUSSELL—Public Water-supplies....8vo, 5 00
VENABLE—Methods and Devices for Bacterial Treatment of Sewage....8vo, 3 00
WARD and WHIPPLE—Freshwater Biology....(*In Press.*)
WARE—Beet-sugar Manufacture and Refining. Vol. I....8vo, 4 00
Vol. II....8vo, 5 00
WASHINGTON—Manual of the Chemical Analysis of Rocks....8vo, 2 00
WEAVER—Military Explosives....8vo, *3 00
WELLS—Laboratory Guide in Qualitative Chemical Analysis....8vo, 1 50
Short Course in Inorganic Qualitative Chemical Analysis for Engineering Students....12mo, 1 50
Text-book of Chemical Arithmetic....12mo, 1 25
WHIPPLE—Microscopy of Drinking-water....8vo, 3 50
WILSON—Cyanide Processes....12mo, 1 50
WIECHMANN—Sugar Analysis. Third Edition, Revised....Small 8vo, *3 00
WINTON—Microscopy of Vegetable Foods....8vo, 7 50
ZSIGMONDY—Colloids and the Ultramicroscope. (ALEXANDER.)
Small 8vo, 3 00

CIVIL ENGINEERING.

BRIDGES AND ROOFS, HYDRAULICS, MATERIALS OF ENGINEERING. RAILWAY ENGINEERING.

AMERICAN CIVIL ENGINEERS' POCKET BOOK. (MANSFIELD MERRIMAN, Editor-in-chief.)....16mo, mor., *5 00
BAKER—Engineers' Surveying Instruments....12mo, 3 00
BIXBY—Graphical Computing Table....Paper 19¼ × 24¼ inches, 0 25
BREED and HOSMER—Principles and Practice of Surveying.
Vol. I. Elementary Surveying....8vo, 3 00
Vol. II. Higher Surveying....8vo, 2 50
BURR—Ancient and Modern Engineering and the Isthmian Canal....8vo, *3 50
COMSTOCK—Field Astronomy for Engineers....8vo, 2 50
CORTHELL—Allowable Pressure on Deep Foundations....12mo, *1 25
CRANDALL—Text-book on Geodesy and Least Squares....8vo, 3 00
DAVIS—Elevation and Stadia Tables....8vo, 1 00
ELLIOTT—Engineering for Land Drainage....12mo, 2 00
FIEBEGER—Treatise on Civil Engineering....8vo, *5 00
FLEMER—Phototopographic Methods and Instruments....8vo, 5 00
FOLWELL—Sewerage. (Designing and Maintenance.)....8vo, 3 00
FOWLER—Sub-Aqueous Foundations....(*In Press.*)
FREITAG—Architectural Engineering....8vo, 3 50
HAUCH and RICE—Tables of Quantities for Preliminary Estimates....12mo, *1 25
HAYFORD—Text-book of Geodetic Astronomy....8vo, 3 00
HERING—Ready Reference Tables, (Conversion Factors.)....16mo, mor., 2 50

HESS—Graphics and Structural Design.....8vo, *$3 00
HOSMER—Azimuth.....16mo, mor., 1 00
Text-book on Practical Astronomy.....8vo, *2 00
HOWE—Retaining Walls for Earth. Sixth Edition, Revised.....12mo, 1 25
IVES—Adjustments of the Engineer's Transit and Level.....16mo, bds., *0 25
and HILTS—Problems in Surveying, Railroad Surveying and Geodesy.....16mo, mor., 1 50
JOHNSON (J. B.) and SMITH—Theory and Practice of Surveying. Small 8vo, *3 50
(L. J.)—Statics by Algebraic and Graphic Methods.....8vo, 2 00
KINNICUTT, WINSLOW and PRATT—Sewage Disposal.....8vo, *3 00
KIRBY—Elements of Specification Writing.....8vo, *1 25
MAHAN—Descriptive Geometry.....8vo, *1 50
MARSTON and ERINGER—Sewers and Drains.....(*In Preparation.*)
MERRIMAN—Elements of Precise Surveying and Geodesy.....8vo, 2 50
and BROOKS—Handbook for Surveyors.....16mo, mor., 2 00
NUGENT—Plane Surveying.....8vo, 3 50
OGDEN—Sewer Construction.....8vo, 3 00
Sewer Design. Second Edition. Rewritten.....8vo, *2 00
and CLEVELAND—Practical Methods of Sewage Disposal for Residences, Hotels, and Institutions.....8vo, *1 50
PARSONS—Disposal of Municipal Refuse.....8vo, 2 00
PATTON—Treatise on Civil Engineering.....8vo, half leather, 7 50
REED—Topographical Drawing and Sketching.....4to, 5 00
RIEMER—Shaft-sinking under Difficult Conditions. (CORNING and PEELE.)
8vo, 3 00
SIEBERT and BIGGIN—Modern Stone-cutting and Masonry.....8vo, 1 50
SMITH—Manual of Topographical Drawing. (MCMILLAN.).....8vo, 2 50
SOPER—Air and Ventilation of Subways.....12mo, 2 50
TRACY—Exercises in Surveying.....12mo, mor., *1 00
Plane Surveying.....16mo, mor., 3 00
VENABLE—Garbage Crematories in America.....8vo, 2 00
Methods and Devices for Bacterial Treatment of Sewage.....8vo, 3 00
WAIT—Engineering and Architectural Jurisprudence.....8vo, 6 00
Sheep, 6 50
Law of Contracts.....8vo, 3 00
Law of Operations Preliminary to Construction in Engineering and Architecture.....8vo, 5 00
Sheep, 5 50
WARREN—Stereotomy—Problems in Stone-cutting.....8vo, 2 50
WATERBURY—Vest-Pocket Hand-book of Mathematics for Engineers.
$2\frac{1}{2} \times 5\frac{1}{4}$ inches, mor., *1 00
Enlarged Edition, Including Tables.....mor., *1 50
WEBB—Problems in the Use and Adjustment of Engineering Instruments.
16mo, mor., 1 20
WILSON—Topographic, Trigonometric and Geodetic Surveying 8vo, 3 55

BRIDGES AND ROOFS.

BISHOP—Drafting Forms. Loose Leaf Sheets, each..... *0 02
Structural Details of Hip and Valley Rafters.....Oblong large 8vo. *1 75
Structural Drafting.....(*In Press.*)
BOLLER—Practical Treatise on the Construction of Iron Highway Bridges
8vo, 2 00
Thames River Bridge.....Oblong paper, *5 00
BURR—Suspension Bridges.....8vo, *4 50
and FALK—Design and Construction of Metallic Bridges.....8vo, 5 00
Influence Lines for Bridge and Roof Computations.....8vo, 3 00
DU BOIS—Mechanics of Engineering. Vol. II.....Small 4to, 10 00
FOSTER—Treatise on Wooden Trestle Bridges. Fourth Edition.....4to, *5 00
GREENE—Arches in Wood, Iron, and Stone.....8vo, 2 50
Bridge Trusses.....8vo, 2 50
Roof Trusses.....8vo, 1 25
GRIMM—Secondary Stresses in Bridge Trusses.....8vo, 2 50
HELLER—Stresses in Structures and the Accompanying Deformations.
8vo, 3 00

HOWE—Design of Simple Roof-trusses in Wood and Steel....8vo, $2 00
Influence Lines for the Determination of Maximum Moments in Beams and Trusses....(*In Press.*)
Symmetrical Masonry Arches. Second Edition, Revised....8vo, *2 50
Treatise on Arches....8vo, 4 00
HUDSON—Deflections and Statically Indeterminate Stresses.....Small 4to, *3 50
Plate Girder Design....8vo, *1 50
JACOBY—Structural Details, or Elements of Design in Heavy Framing, 8vo, *2 25
JOHNSON, BRYAN and TURNEAURE—Theory and Practice in the Designing of Modern Framed Structures. New Edition.
Part I. Stresses in Simple Structures....8vo, *3 00
Part II. Statically Indeterminate Structures and Secondary Stresses 8vo, *4 00
MERRIMAN and JACOBY—Text-book on Roofs and Bridges:
Part I. Stresses in Simple Trusses....8vo, 2 50
Part II. Graphic Statics....8vo, 2 50
Part III. Bridge Design....8vo, 2 50
Part IV. Higher Structures....8vo, 2 50
RICKER—Design and Construction of Roofs....8vo, 5 00
SONDERICKER—Graphic Statics, with Applications to Trusses, Beams, and Arches....8vo, *2 00
WADDELL—De Pontibus, Pocket-book for Bridge Engineers....16mo, mor., 2 00
Specifications for Steel Bridges....12mo, *0 50

HYDRAULICS.

BARNES—Ice Formation....8vo, 3 00
BAZIN—Experiments upon the Contraction of the Liquid Vein Issuing from an Orifice. (TRAUTWINE.)....8vo, 2 00
BOVEY—Treatise on Hydraulics....8vo, 5 00
CHURCH—Diagrams of Mean Velocity of Water in Open Channels. Oblong 4to, paper, 1 50
Hydraulic Motors....8vo, 2 00
Mechanics of Fluids (Being Part IV of Mechanics of Engineering)..8vo, 3 00
COFFIN—Graphical Solution of Hydraulic Problems....16mo, mor., 2 50
FLATHER—Dynamometers, and the Measurement of Power....12mo, 3 00
FOLWELL—Water-supply Engineering....8vo, 4 00
FRIZELL—Water-power....8vo, 5 00
FUERTES—Water and Public Health....12mo, 1 50
FULLER—Domestic Water Supplies for the Farm....8vo, *1 50
GANGUILLET and KUTTER—General Formula for the Uniform Flow of Water in Rivers and Other Channels. (HERING and TRAUTWINE.)...8vo, 4 00
HAZEN—Clean Water and How to Get It. Second Edition.....Small 8vo, 1 50
Filtration of Public Water-supplies....8vo, 3 00
HAZELHURST—Towers and Tanks for Water-works....8vo, 2 50
HERSCHEL—115 Experiments on the Carrying Capacity of Large, Riveted, Metal Conduits....8vo, 2 00
HOYT and GROVER—River Discharge....8vo, 2 00
HUBBARD and KIERSTED—Water-works Management and Maintenance, 8vo, 4 00
LYNDON—Development and Electrical Distribution of Water Power..8vo, *3 00
MASON—Water-supply. (Considered Principally from a Sanitary Standpoint.)....8vo, 4 00
MERRIMAN—Elements of Hydraulics....12mo, *1 00
Treatise on Hydraulics. 9th Edition, Rewritten....8vo, *4 00
MOLITOR—Hydraulics of Rivers, Weirs and Sluices....8vo, *2 00
MORRISON and BRODIE—High Masonry Dam Design....8vo, *1 50
RECTOR—Underground Waters for Commercial Purposes....12mo, *1 00
SCHUYLER—Reservoirs for Irrigation, Water-power, and Domestic Water supply. Second Edition, Revised and Enlarged.....Large 8vo, 6 00
THOMAS and WATT—Improvement of Rivers. Second Edition, 2 Vols. 4to, *7 50
TURNEAURE and RUSSELL—Public Water-supplies....8vo, 5 00
WEGMANN—Design and Construction of Dams. 6th Ed., enlarged.....4to, *6 00
Water Supply of the City of New York from 1658 to 1895.....4to, 10 00

WHIPPLE—Value of Pure Water.....Small 8vo, $1 00
WHITE—Catskill Water Supply of New York City.....8vo, *6 00
WILLIAMS and HAZEN—Hydraulic Tables.....8vo, 1 50
WILSON—Irrigation Engineering.....8vo, 4 00
WOOD—Turbines.....8vo, 2 50

MATERIALS OF ENGINEERING.

BAKER—Roads and Pavements. Second Edition, Revised.....8vo, 5 00
Treatise on Masonry Construction.....8vo, 5 00
BLACK—United States Public Works.....Oblong 4to, 5 00
BLANCHARD and DROWNE—Highway Engineering, as Presented at the Second International Road Congress, Brussels, 1910.....8vo, *2 00
Text-book on Highway Engineering.....8vo, *4 50
BOTTLER—German and American Varnish Making. (SABIN.)...Small 8vo, *3 50
BURR—Elasticity and Resistance of the Materials of Engineering.....8vo, 7 50
BYRNE—Highway Construction.....8vo, 5 00
Inspection of the Materials and Workmanship Employed in Construction. 16mo, 3 00
CHURCH—Mechanics of Engineering.....8vo, 6 00
Mechanics of Solids (Being Parts I, II, III of Mechanics of Engineering).....8vo, 4 50
Mechanics of Fluids (Being Part IV of Mechanics of Engineering).8vo, 3 00
DU BOIS—Mechanics of Engineering:
Vol. I. Kinematics, Statics, Kinetics.....Small 4to, 7 50
ECKEL—Building Stones and Clays.....8vo, *3 00
Cements, Limes, and Plasters.....8vo, *6 00
FULLER and JOHNSTON—Applied Mechanics:
Vol. I. Theory of Statics and Kinetics.....8vo, *2 50
Vol. II. Strength of Materials..... (*In Preparation.*)
GREENE—Structural Mechanics.....8vo, *2 50
HOLLEY—Analysis of Paint and Varnish Products.....Small 8vo, *2 50
Lead and Zinc Pigments.....Small 8vo, *3 00
HUBBARD—Dust Preventives and Road Binders.....8vo, *3 00
JOHNSON—Materials of Construction.....Large 8vo, 6 00
KEEP—Cast Iron.....8vo, 2 50
KING—Elements of the Mechanics of Materials and of Power of Transmission.....8vo, *2 50
LANZA—Applied Mechanics.....8vo, 7 50
LOWE—Paints for Steel Structures.....12mo, 1 00
MAIRE—Modern Pigments and their Vehicles.....12mo, 2 00
MAURER—Technical Mechanics.....8vo, 4 00
MERRILL—Stones for Building and Decoration.....8vo, 5 00
MERRIMAN—Mechanics of Materials.....8vo, 5 00
Strength of Materials.....12mo, *1 00
METCALF—Steel. A Manual for Steel-users.....12mo, 2 00
MILLS—Materials for Construction.....(*In Press.*)
MORRISON—Highway Engineering.....8vo, 2 50
MURDOCK—Strength of Materials.....12mo, *2 00
PATTON—Practical Treatise on Foundations.....8vo, 5 00
RICE—Concrete Block Manufacture.....8vo, 2 00
RICHARDSON—Modern Asphalt Pavement.....8vo, 3 00
RICHEY—Building Foreman's Pocket Book and Ready Reference.16mo,mor., 5 00
Cement Workers' and Plasterers' Edition (Building Mechanics' Ready Reference Series).....16mo, mor., *1 50
Handbook for Superintendents of Construction.....16mo, mor., 4 00
Stone and Brick Masons' Edition (Building Mechanics' Ready Reference Series).....16mo, mor., *1 50
RIES—Building Stones and Clay Products.....8vo, *3 00
Clays: Their Occurrence, Properties, and Uses.....8vo, *5 00
and LEIGHTON—History of the Clay-working Industry of the United States.....8vo, *2 50
and WATSON—Engineering Geology.....(*In Press.*)
SABIN—Industrial and Artistic Technology of Paint and Varnish.....8vo, 3 00
SMITH—Strength of Material.....12mo, *1 25
SNOW—Principal Species of Wood.....8vo, 3 50

SPALDING—Hydraulic Cement.....12mo, $2 00
Text-book on Road and Pavements.....12mo, *2 00
TAYLOR and THOMPSON—Concrete Costs.....Small 8vo, *5 00
Extracts on Reinforced Concrete Design.....8vo, *2 00
Treatise on Concrete, Plain and Reinforced.....8vo, 5 00
THURSTON—Materials of Engineering. In Three Parts.....8vo, 8 00
Part I. Non-metallic Materials of Engineering and Metallurgy...8vo, 2 00
Part II. Iron and Steel.....8vo, 3 50
Part III. A Treatise on Brasses, Bronzes, and Other Alloys and their Constituents.....8vo, 2 50
TILLSON—Street Pavements and Paving Materials.....8vo, *4 00
TURNEAURE and MAURER—Principles of Reinforced Concrete Construction. 8vo, 3 50
WATERBURY—Cement Laboratory Manual.....12mo, 1 00
Laboratory Manual for Testing Materials of Construction.....12mo, *1 50
WOOD (DE V.) Treatise on the Resistance of Materials, and an Appendix on the Preservation of Timber.....8vo, 2 00
(M. P.)—Rustless Coatings: Corrosion and Electrolysis of Iron and Steel.....8vo, 4 00

RAILWAY ENGINEERING.

BERG—Buildings and Structures of American Railroads.....4to, 5 00
BROOKS—Handbook of Street Railroad Location.....16mo, mor., 1 50
BURT—Railway Station Service.....12mo, *2 00
BUTTS—Civil Engineer's Field-book.....16mo, mor., 2 50
CRANDALL—Railway and Other Earthwork Tables.....8vo, 1 50
and BARNES—Railroad Surveying.....16mo, mor., 2 00
CROCKETT—Methods for Earthwork Computations.....8vo, *1 50
DREDGE—History of the Pennsylvania Railroad. (1879).....Paper, 5 00
FISH—Earthwork Haul and Overhaul.....8vo, *1 50
FISHER—Table of Cubic Yards.....Cardboard, 0 25
GILBERT, WIGHTMAN and SAUNDERS—Subways and Tunnels of New York. 8vo, *4 00
GODWIN—Railroad Engineers' Field-book and Explorers' Guide..16mo, mor., 2 50
HUDSON—Tables for Calculating the Cubic Contents of Excavations and Embankments.....8vo, 1 00
IVES and HILTS—Problems in Surveying, Railroad Surveying and Geodesy. 16mo, mor., 1 50
MOLITOR and BEARD—Manual for Resident Engineers.....16mo, 1 00
NAGLE—Field Manual for Railroad Engineers.....16mo, mor., 3 00
ORROCK—Railroad Structures and Estimates.....8vo, *3 00
PHILBRICK—Field Manual for Engineers.....16mo, mor., 3 00
PICKELS and WILEY—Text-book on Railroad Surveying.....16mo, mor., *2 50
RAYMOND—Elements of Railroad Engineering. Second Edition.....8vo, 3 50
Railroad Engineer's Field Book.....(*In Preparation.*)
Railroad Field Geometry.....16mo, mor., 2 00
ROBERTS—Track Formulæ and Tables.....16mo, mor., 3 00
SEARLES—Field Engineering.....16mo, mor., 3 00
Railroad Spiral.....16mo, mor., 1 50
TAYLOR—Prismoidal Formulæ and Earthwork.....8vo, 1 50
WEBB—Economics of Railroad Construction.....Small 8vo, 2 50
Railroad Construction.....16mo, mor., 5 00
WELLINGTON—Economic Theory of the Location of Railways....Small 8vo, 5 00
WILSON—Elements of Railroad-Track and Construction.....12mo, 2 00

DRAWING.

BARR and WOOD—Kinematics of Machinery.....8vo, 2 50
BARTLETT—Mechanical Drawing. Third Edition.....8vo, *3 00
" " Abridgment of the Second Edition....8vo, *1 50
and JOHNSON—Engineering Descriptive Geometry.....8vo, *1 50
BISHOP—Drafting Forms. Loose Leaf Sheets, each..... *0 02
Structural Details of Hip and Valley Rafters.....Oblong large 8vo, *1 75

BISHOP—Structural Drafting ..... (*In Press.*)
BLESSING and DARLING—Descriptive Geometry 8vo, *$1 50
Elements of Drawing 8vo, *1 50
COOLIDGE—Manual of Drawing ..... 8vo, paper, 1 00
and FREEMAN—Elements of General Drafting for Mechanical Engineers ..... Oblong 4to, 2 50
DURLEY—Kinematics of Machines 8vo, 4 00
EMCH—Introduction to Projective Geometry and its Application 8vo, 2 50
FRENCH and IVES—Stereotomy 8vo, 2 50
GREENBERG and HOWE—Architectural Drafting ..... Oblong 4to, *1 50
HESS—Graphics and Structural Design 8vo, *3 00
HILL—Text-book on Shades and Shadows, and Perspective 8vo, 2 00
HOWE—Agricultural Drafting ..... oblong quarto, *1 25
Reference and Problem Sheets to accompany Agricultural Drafting. each, *0 02
JAMES and MACKENZIE—Working Drawings of Machinery 8vo, *2 00
JAMISON—Advanced Mechanical Drawing 8vo, 2 00
Elements of Mechanical Drawing 8vo, 2 50
JONES—Machine Design:
Part I. Kinematics of Machinery 8vo, 1 50
Part II. Form, Strength, and Proportions of Parts 8vo, 3 00
KIMBALL and BARR—Machine Design 8vo, *3 00
MACCORD—Elements of Descriptive Geometry 8vo, 3 00
Kinematics; or, Practical Mechanism 8vo, 5 00
Mechanical Drawing 4to, 4 00
Velocity Diagrams 8vo, 1 50
MCLEOD—Descriptive Geometry ..... Small 8vo, 1 50
MAHAN—Descriptive Geometry and Stone-cutting 8vo, *1 50
Industrial Drawing. (THOMPSON.) 8vo, 3 50
MOYER—Descriptive Geometry 8vo, 2 00
REED—Topographical Drawing and Sketching 4to, 5 00
REID—Mechanical Drawing. (Elementary and Advanced.) 8vo, *2 00
Text-book of Mechanical Drawing and Elementary Machine Design. 8vo, 3 00
ROBINSON—Principles of Mechanism 8vo, 3 00
SCHWAMB and MERRILL—Elements of Mechanism 8vo, 3 00
SMITH (A. W.) and MARX—Machine Design 8vo, 3 00
(R. S.)—Manual of Topographical Drawing. (MCMILLAN.) 8vo, 2 50
TITSWORTH—Elements of Mechanical Drawing ..... Oblong large 8vo, *1 25
TRACY and NORTH—Descriptive Geometry ..... Oblong, *2 00
WARREN—Elements of Descriptive Geometry, Shadows, and Perspective. 8vo, 3 50
Elements of Machine Construction and Drawing 8vo, 7 50
Elements of Plane and Solid Free-hand Geometrical Drawing 12mo, 1 00
General Problems of Shades and Shadows 8vo, 3 00
Manual of Elementary Problems in the Linear Perspective of Forms and Shadows 12mo, 1 00
Manual of Elementary Projection Drawing 12mo, 1 50
Plane Problems in Elementary Geometry 12mo, 1 25
WEISBACH—Kinematics and Power of Transmission. (HERRMANN and KLEIN.) 8vo, 5 00
WILSON (H. M.)—Topographic, Trigonometric and Geodetic Surveying. 8vo, 3 50
(V. T.) Descriptive Geometry 8vo, *1 50
Free-hand Lettering 8vo, 1 00
Free-hand Perspective 8vo, 2 50
WOOLF—Elementary Course in Descriptive Geometry ..... Large 8vo, 3 00

ELECTRICITY AND PHYSICS.

ABEGG—Theory of Electrolytic Dissociation. (VON ENDE.) 12mo, *1 25
ANTHONY and BALL—Lecture-notes on the Theory of Electrical Measurements 12mo, 1 00
and BRACKETT—Text-book of Physics. (MAGIE.) ..... Small 8vo, 3 00
BENJAMIN—History of Electricity 8vo, 3 00
BETTS—Lead Refining and Electrolysis 8vo, 4 00
BURGESS and LE CHATELIER—Measurement of High Temperatures. Third Edition 8vo, *4 00

CALDERWOOD—Wiring Exercises (Loose Leaf Lab. Manual). *(In Preparation.)*

CLASSEN—Quantitative Analysis by Electrolysis. (HALL) 8vo, *$2 50

CLEWELL—Laboratory Manual, Direct and Alternating Current 8vo, *1 00

COLLINS—Manual of Wireless Telegraphy and Telephony 12mo, *1 50

CREHORE and SQUIER—Polarizing Photo-chronograph 8vo, 3 00

DANNEEL—Electrochemistry. (MERRIAM.) 12mo, *1 25

DAWSON—"Engineering" and Electric Traction Pocket-book .. 16mo, mor., 5 00

DOLEZALEK—Theory of the Lead Accumulator (Storage Battery). (VON ENDE.) 12mo, 2 50

DUHEM—Thermodynamics and Chemistry. (BURGESS.) 8vo, 4 00

FLATHER—Dynamometers, and the Measurement of Power 12mo, 3 00

GETMAN—Introduction to Physical Science 12mo, *1 50

GILBERT—De Magnete. (MOTTELAY.) 8vo, 2 50

HANCHETT—Alternating Currents 12mo, *1 00

HERING—Ready Reference Tables (Conversion Factors) ..... 16mo, mor., 2 50

HIGBIE—Electric Lighting and Distribution ..... *(In Preparation.)*

HOBART and ELLIS—High-speed Dynamo Electric Machinery 8vo, *6 00

HOLMAN—Precision of Measurements 8vo, 2 00

Telescope-Mirror-scale Method, Adjustments, and Tests .... Large 8vo, 0 75

HUTCHINSON—High-Efficiency Electrical Illuminants and Illumination. Small 8vo, *2 50

JONES—Electric Ignition for Combustion Motors 8vo, *4 00

KARAPETOFF—Elementary Electrical Testing (Loose Leaf Lab. Manual) 4to, Paper, *0 50

Single Exercises, each *0 02

Experimental Electrical Engineering:

Vol. I 8vo, *3 50

Vol. II 8vo, *2 50

KINZBRUNNER—Testing of Continuous-current Machines 8vo, 2 00

KOCH—Mathematics of Applied Electricity ..... Small 8vo, *3 00

LANDAUER—Spectrum Analysis. (TINGLE.) 8vo, 3 00

LAUFFER—Electrical Injuries 16mo, *0 50

Resuscitation, from Electric and Traumatic Shock, etc 16mo, *0 40

In lots of 100 Copies or more *0 30

LÖB—Electrochemistry of Organic Compounds. (LORENZ.) 8vo, 3 00

LYNDON—Development and Electrical Distribution of Water Power 8vo, *3 00

LYONS—Treatise on Electromagnetic Phenomena. Vols. I and II, 8vo, each, *6 00

MARTIN—Measurement of Induction Shocks 12mo, *1 25

MICHIE—Elements of Wave Motion Relating to Sound and Light 8vo, *4 00

MORECROFT—Continuous and Alternating Current Machinery ... Small 8vo, *1 75

MORGAN—Physical Chemistry for Electrical Engineers 12mo, *1 50

NORRIS—Introduction to the Study of Electrical Engineering 8vo, *2 50

PARSHALL and HOBART—Electric Machine Design ..... 4to, half mor., *12 50

REAGAN—Locomotives: Simple, Compound, and Electric ..... Small 8vo, 3 50

ROBINSON—Elements of Electricity 8vo, *2 50

RODENHAUSER and SCHOENAWA—Electric Furnaces in the Iron and Steel Industry (VOM BAUR.) 8vo, *3 50

ROSENBERG—Electrical Engineering. (HALDANE GEE—KINZBRUNNER.) .. 8vo, *2 00

RYAN—Design of Electrical Machinery:

Vol. I. Direct Current Dynamos 8vo, *1 50

Vol. II. Alternating Current Transformers 8vo, *1 50

Vol. III. Alternators, Synchronous Motors, and Rotary Converters. 8vo, *1 50

SCHAPPER—Laboratory Guide for Students in Physical Chemistry 12mo, 1 00

TILLMAN—Elementary Lessons in Heat 8vo, *1 50

TIMBIE—Answers to Problems in Elements of Electricity ..... 12mo, Paper, *0 25

Answers to Problems in Essentials of Electricity ..... 12mo, paper, *0 25

Electrical Measurements, A. C. and D. C. (Loose Leaf Lab. Manual). 4to, Paper, *0 85

Single Exercises, each *0 02

Elements of Electricity ..... Small 8vo, *2 00

Essentials of Electricity 12mo, *1 25

Introduction to Industrial Electricity ..... *(In Preparation.)*

and HIGBIE—Alternating Currents ..... *(In Preparation.)*

TORY and PITCHER—Manual of Laboratory Physics ..... Small 8vo, 2 00

ULKE—Modern Electrolytic Copper Refining 8vo, 3 00

WATERS—Commercial Dynamo Design 8vo, *2 00

LAW.

BRENNAN—Hand-book of Useful Legal Information for Business Men. 16mo, mor., *$5 00
DAVIS—Elements of Law. 8vo, *2 50
Treatise on the Military Law of United States. Third Edition, Revised. 8vo, *7 00
DUDLEY—Military Law and the Procedure of Courts-martial. Small 8vo, *2 50
MANUAL FOR COURTS MARTIAL. 16mo, mor., 1 50
WAIT—Engineering and Architectural Jurisprudence. 8vo, 6 00
Sheep, 6 50
Law of Contracts. 8vo, 3 00
Law of Operations Preliminary to Construction in Engineering and Architecture. 8vo, 5 00
Sheep, 5 50

MATHEMATICS.

BAKER—Elliptic Functions. 8vo, 1 50
BRIGGS—Elements of Plane Analytic Geometry. (BÔCHER.) 12mo, 1 00
BUCHANAN—Plane and Spherical Trigonometry. 8vo, *1 00
BURNHAM—Mechanics for Machinists. (*In Preparation.*)
Shop Mathematics for Machinists. (*In Preparation.*)
BYERLY—Harmonic Functions. 8vo, 1 00
CARMICHAEL—Theory of Numbers. 8vo, 1 00
Theory of Relativity. 8vo, 1 00
CHANDLER—Elements of the Infinitesimal Calculus. 12mo, 2 00
COFFIN—Vector Analysis. 12mo, *2 50
COMPTON—Manual of Logarithmic Computations. 12mo, 1 50
DICKSON—College Algebra. Small 8vo, *1 50
Elementary Theory of Equations. (*In Press.*)
Introduction to the Theory of Algebraic Equations. Small 8vo, *1 25
EMCH—Introduction to Projective Geometry and its Application. 8vo, 2 50
FISKE—Functions of a Complex Variable. 8vo, 1 00
HALSTED—Elementary Synthetic Geometry. 8vo, 1 50
Elements of Geometry. 8vo, 1 75
Rational Geometry. 12mo, *1 50
Synthetic Projective Geometry. 8vo, 1 00
HANCOCK—Lectures on the Theory of Elliptic Functions. 8vo, *5 00
HYDE—Grassmann's Space Analysis. 8vo, 1 00
JOHNSON (J. B.) Three-place Logarithmic Tables: Vest-pocket size, paper, *0 15
100 copies, *5 00
Mounted on heavy cardboard, 8 × 10 inches, *0 25
10 copies, *2 00
(W. W.) Abridged Editions of Differential and Integral Calculus. Small 8vo, 1 vol., 2 50
Curve Tracing in Cartesian Co-ordinates. 12mo, 1 00
Differential Equations. 8vo, 1 00
Elementary Treatise on Differential Calculus. Small 8vo, 1 50
Elementary Treatise on the Integral Calculus. Small 8vo, 1 50
Theoretical Mechanics. 12mo, *3 00
Theory of Errors and the Method of Least Squares. 12mo, 1 50
Treatise on Differential Calculus. Small 8vo, 3 00
Treatise on the Integral Calculus. Small 8vo, 3 00
Treatise on Ordinary and Partial Differential Equations. Small 8vo, 3 50
KARAPETOFF—Engineering Applications of Higher Mathematics:
Part I. Problems on Machine Design. Small 8vo, *0 75
KOCH—Mathematics of Applied Electricity. Small 8vo, *3 00
LAPLACE—Philosophical Essay on Probabilities. (TRUSCOTT and EMORY.) 12mo, 2 00
LE MESSURIER—Key to Professor W. W. Johnson's Differential Equations. Small 8vo, *1 75

LUDLOW—Logarithmic and Trigonometric Tables....8vo, *$1 00
and BASS—Elements of Trigonometry and Logarithmic and Other Tables....8vo, *3 00
Trigonometry and Tables published separately....Each, *2 00
MACFARLANE—Vector Analysis and Quaternions....8vo, 1 00
McMAHON—Hyperbolic Functions....8vo, 1 00
MANNING—Irrational Numbers and their Representation by Sequences and Series....12mo, 1 25
MARSH—Constructive Text Book on Practical Mathematics:
Vol. I. Industrial Mathematics....Small 8vo, *2 00
Vol. II. Technical Algebra. Part I....Small 8vo, *2 00
Vol. III. Technical Trigonometry....Small 8vo, *. 00
MATHEMATICAL MONOGRAPHS. Edited by MANSFIELD MERRIMAN and ROBERT S. WOODWARD....Octavo, each, 1 00
No. 1. History of Modern Mathematics, by DAVID EUGENE SMITH.
No. 2. Synthetic Projective Geometry, by GEORGE BRUCE HALSTED.
No. 3. Determinants, by LAENAS GIFFORD WELD.
No. 4. Hyperbolic Functions, by JAMES McMAHON.
No. 5. Harmonic Functions, by WILLIAM E. BYERLY.
No. 6. Grassmann's Space Analysis, by EDWARD W. HYDE.
No. 7. Probability and Theory of Errors, by ROBERT S. WOODWARD.
No. 8. Vector Analysis and Quaternions, by ALEXANDER MACFARLANE.
No. 9. Differential Equations, by WILLIAM WOOLSEY JOHNSON.
No. 10. The Solution of Equations, by MANSFIELD MERRIMAN.
No. 11. Functions of a Complex Variable, by THOMAS S. FISKE.
No. 12. Theory of Relativity, by ROBT. D. CARMICHAEL.
No. 13. Theory of Numbers, by ROBT. D. CARMICHAEL.
MAURER—Technical Mechanics....8vo, 4 00
MERRIMAN—Method of Least Squares....8vo, 2 00
Solution of Equations....8vo, 1 00
MORITZ—Elements of Plane Trigonometry....8vo, *2 00
High School Edition....Small 8vo, *1 00
Spherical Trigonometry....8vo, *1 00
Plane and Spherical Combined....8vo, *2 50
RICE and JOHNSON—Differential and Integral Calculus. 2 vols. in one. Small 8vo, 1 50
Elementary Treatise on the Differential Calculus....Small 8vo, 3 00
SMITH—History of Modern Mathematics....8vo, 1 00
VEBLEN and LENNES—Introduction to the Real Infinestimal Analysis of One Variable....8vo, *2 00
WATERBURY—Vest Pocket Hand-book of Mathematics for Engineers. $2\frac{1}{2} \times 5\frac{1}{2}$ inches, mor., *1 00
Enlarged Edition, Including Tables....mor., *1 50
WELD—Determinants....8vo, 1 00
WOOD—Elements of Co-ordinate Geometry....8vo, 2 00
WOODWARD—Probability and Theory of Errors....8vo, 1 00

MECHANICAL ENGINEERING.

MATERIALS OF ENGINEERING, STEAM-ENGINES AND BOILERS.

BACON—Forge Practice....12mo, 1 50
BALDWIN—Steam Heating for Buildings....12mo, 2 50
BARR and WOOD—Kinematics of Machinery....8vo, 2 50
BARTLETT—Mechanical Drawing. Third Edition....8vo, 3 00
Abridgment of the Second Edition....8vo, *1 50
BURR—Ancient and Modern Engineering and the Isthmian Canal....8vo, *3 50
CARPENTER—Heating and Ventilating Buildings....8vo, 4 00
and DIEDERICHS—Experimental Engineering....8vo, *6 00
CLERK—The Gas, Petrol and Oil Engine. Vol. I....8vo, *4 00
and BURLS—The Gas, Petrol, and Oil Engine. Vol. II....8vo, *7 50
COMPTON—First Lessons in Metal Working....12mo, 1 50
and DE GROODT—Speed Lathe....12mo, 1 50
COOLIDGE—Manual of Drawing....8vo, paper, 1 00
and FREEMAN—Elements of General Drafting for Mechanical Engineers....Oblong 4to, 2 50

CROMWELL—Treatise on Belts and Pulleys....12mo, $1 50
Treatise on Toothed Gearing....12mo, 1 50
DINGEY—Machinery Pattern Making....12mo, 2 00
DURLEY—Kinematics of Machines....8vo, 4 00
FLANDERS—Gear-cutting Machinery....Small 8vo, 3 00
FLATHER—Dynamometers and the Measurement of Power....12mo, 3 00
Rope Driving....12mo, 2 00
FULLER and JOHNSTON—Applied Mechanics:
Vol I. Theory of Statics and Kinetics....8vo, *2 50
Vol. II. Strength of Materials....(*In Preparation.*)
GILL—Gas and Fuel Analysis for Engineers....12mo, 1 25
GOSS—Locomotive Sparks....8vo, 2 00
GREENE—Elements of Heating and Ventilation....8vo, *2 50
Pumping Machinery....8vo, *4 00
HERING—Ready Reference Tables (Conversion Factors)....16mo, mor., 2 50
HIRSHFELD and ULBRICHT—Gas Engines for the Farm....Small 8vo, *1 50
Gas Power....Small 8vo, *1 25
Steam Power....(*In Preparation.*)
HOBART and ELLIS—High Speed Dynamo Electric Machinery....8vo, *6 00
HUTTON—Gas Engine....8vo, 5 00
JAMES and MACKENZIE—Working Drawings of Machinery....8vo, *2 00
JAMISON—Advanced Mechanical Drawing....8vo, 2 00
Elements of Mechanical Drawing....8vo, 2 50
JONES—Gas Engine....8vo, 4 00
Machine Design:
Part I. Kinematics of Machinery....8vo, 1 50
Part II. Form, Strength, and Proportions of Parts....8vo, 3 00
KAUP—Machine Shop Practice....Small 8vo, *1 25
and CHAMBERLAIN—Text-book on Tool Making...(*In Preparation.*)
KENT—Mechanical Engineers' Pocket-Book....16mo, mor., *5 00
KERR—Power and Power Transmission....8vo, 2 00
KIMBALL and BARR—Machine Design....8vo, *3 00
KING—Elements of the Mechanics of Materials and of Power of Transmission....8vo, *2 50
LANZA—Dynamics of Machinery....8vo, *2 50
LEONARD—Machine Shop Tools and Methods....8vo, 4 00
LEVIN—Modern Gas Engine and the Gas Producer....8vo, *4 00
MACCORD—Kinematics; or, Practical Mechanism....8vo, 5 00
Mechanical Drawing....4to, 4 00
Velocity Diagrams....8vo, 1 50
MACFARLAND—Standard Reduction Factors for Gases....8vo, 1 50
MACINTIRE—Mechanical Refrigeration....8vo, *4 00
MAHAN—Industrial Drawing. (THOMPSON.)....8vo, 3 50
MEHRTENS—Gas Engine Theory and Design....Small 8vo, 2 50
MORECROFT—Electric Machinery. Text-book....Small 8vo, *1 50
OBERG—Handbook of Small Tools....Small 8vo, 2 50
PARSHALL and HOBART—Electric Machine Design...Small 4to, half leather, *12 50
PEELE—Compressed Air Plant. Second Edition, Revised and Enlarged. 8vo. *3 50
POOLE—Calorific Power of Fuels....8vo. 3 00
PORTER—Engineering Reminiscences, 1855 to 1882....8vo, *3 00
REID—Mechanical Drawing. (Elementary and Advanced.)....8vo, *2 00
Text-book of Mechanical Drawing and Elementary Machine Design. 8vo, 3 00
RICHARDS—Compressed Air....12mo, 1 50
ROBINSON—Principles of Mechanism....8vo, 3 00
RYAN—Design of Electrical Machinery:
Vol. I. Direct Current Dynamos....8vo, *1 50
Vol. II. Alternating Current Transformers....8vo, *1 50
Vol. III. Alternators, Synchronous Motors, and Rotary Converters. 8vo, *1 50
SCHWAMB and MERRILL—Elements of Mechanism....8vo, 3 00
SMITH (O.)—Press-working of Metals....8vo, 3 00
(A. W.) and MARX—Machine Design....8vo, 3 00
SOREL—Carbureting and Combustion in Alcohol Engines. (WOODWARD and PRESTON.)....Small 8vo, 3 00
STONE—Practical Testing of Gas and Gas Meters....8vo, 3 50

THURSTON—Animal as a Machine and Prime Motor, and the Laws of Energetics.....12mo, $1 00
Treatise on Friction and Lost Work in Machinery and Mill Work..8vo, 3 00
TILLSON—Complete Automobile Instructor.....16mo, *1 50
TITSWORTH—Elements of Mechanical Drawing.....Oblong 8vo, *1 25
TURNER and TOWN—Pattern Making.....(*In Preparation.*)
WARREN—Elements of Machine Construction and Drawing.....8vo, 7 50
WATERBURY—Vest Pocket Hand-book of Mathematics for Engineers. $2\frac{1}{2} \times 5\frac{1}{2}$ inches, mor., *1 00
Enlarged Edition, Including Tables.....mor., *1 50
WEISBACH—Kinematics and the Power of Transmission. (HERRMANN—KLEIN.).....8vo, 5 00
Machinery of Transmission and Governors. (HERRMANN—KLEIN.).8vo, 5 50
WOOD—Turbines.....8vo, 2 00

MATERIALS OF ENGINEERING.

BOTTLER—German and American Varnish Making. (SABIN.)...Small 8vo, *3 50
BURR—Elasticity and Resistance of the Materials of Engineering.....8vo, 7 50
CHURCH—Mechanics of Engineering.....8vo, 6 00
Mechanics of Solids (Being Parts I, II, III of Mechanics of Engineering). 8vo, 4 50
FULLER and JOHNSTON—Applied Mechanics:
Vol. I. Theory of Statics and Kinetics.....8vo, *2 50
Vol. II. Strength of Materials.....(*In Preparation.*)
GREENE—Structural Mechanics.....8vo, *2 50
HOLLEY—Analysis of Paint and Varnish Products.....Small 8vo, *2 50
Lead and Zinc Pigments.....Small 8vo, *3 00
JOHNSON (C. M.)—Rapid Methods for the Chemical Analysis of Special Steels, Steel-making Alloys and Graphite. Second Edition. Rewritten.....8vo, *3 00
(J. B.) Materials of Construction.....8vo, 6 00
KEEP—Cast Iron.....8vo, 2 50
KING—Elements of the Mechanics of Materials and of Power of Transmission.....8vo, *2 50
LANZA—Applied Mechanics.....8vo, 7 50
LOWE—Paints for Steel Structures.....12mo, 1 00
MAIRE—Modern Pigments and their Vehicles.....12mo, 2 00
MARTIN—Text-Book of Mechanics:
Vol. I. Statics.....12mo, *1 25
Vol. II. Kinematics and Kinetics.....12mo, *1 50
Vol. III. Mechanics of Materials.....12mo, *1 50
Vol. IV. Applied Statics.....12mo, *1 50
MAURER—Technical Mechanics.....8vo, 4 00
MERRIMAN—Mechanics of Materials.....8vo, 5 00
Strength of Materials.....12mo, *1 00
METCALF—Steel. A Manual for Steel-users.....12mo, 2 00
MILLS—Materials of Construction.....(*In Press.*)
MURDOCK—Strength of Materials.....12mo, *2 00
SABIN—Industrial and Artistic Technology of Paint and Varnish.....8vo, 3 00
SMITH (A. W.)—Materials of Machines.....12mo, 1 00
(H. E.)—Strength of Material.....12mo, *1 25
THURSTON—Materials of Engineering.....3 vols., 8vo, 8 00
Part I. Non-metallic Materials of Engineering.....8vo, 2 00
Part II. Iron and Steel.....8vo, 3 50
Part III. A Treatise on Brasses, Bronzes, and Other Alloys and their Constituents.....8vo, 2 50
WATERBURY—Laboratory Manual for Testing Materials of Construction. 12mo, *1 50
WOOD (DE V.)—Elements of Analytical Mechanics.....8vo, 3 00
Treatise on the Resistance of Materials and an Appendix on the Preservation of Timber.....8vo, 2 00
(M. P.) Rustless Coatings. Corrosion and Electrolysis of Iron and Steel.....8vo, 4 00

STEAM-ENGINES AND BOILERS.

ABRAHAM—Steam Economy in the Sugar Factory. (BAYLE.) 12mo, *$1 50
BERRY—Temperature-entropy Diagram. Third Edition Revised and Enlarged 12mo, 2 50
CARNOT—Reflections on the Motive Power of Heat. (THURSTON.) 12mo, 1 50
CHASE—Art of Pattern Making 12mo, 2 50
CREIGHTON—Steam-engine and other Heat Motors 8vo, 5 00
DAWSON—"Engineering" and Electric Traction Pocket-book ..... 16mo, mor., 5 00
GEBHARDT—Steam Power Plant Engineering. Fourth Edition 8vo, *4 00
GOSS—Locomotive Performance 8vo, 5 00
HEMENWAY—Indicator Practice and Steam-engine Economy 12mo, 2 00
HIRSHFELD and BARNARD—Heat Power Engineering 8vo, *5 00
and ULBRICHT—Steam Power ..... (*In Preparation.*)
HUTTON—Heat and Heat-engines 8vo, 5 00
Mechanical Engineering of Power Plants 8vo, 5 00
KENT—Steam Boiler Economy 8vo, 4 00
KING—Steam Engineering 8vo, *4 00
KNEASS—Practice and Theory of the Injector 8vo, 1 50
MACCORD—Slide-valves 8vo, 2 00
MEYER—Modern Locomotive Construction 4to, 10 00
MILLER, BERRY, and RILEY—Problems in Thermodynamics ..... 8vo, paper, 0 75
MOYER—Steam Turbines 8vo, 4 00
PEABODY—Manual of the Steam-engine Indicator 12mo, 1 50
Tables of the Properties of Steam and Other Vapors and Temperature-Entropy Table 8vo, 1 00
Thermodynamics of the Steam-engine and Other Heat-engines 8vo, 5 00
Thermodynamics of the Steam Turbine 8vo, *3 00
Valve-gears for Steam-engines 8vo, 2 50
and MILLER—Steam-boilers 8vo, 4 00
PERKINS—Introduction to General Thermodynamics 12mo, *1 50
PUPIN—Thermodynamics of Reversible Cycles in Gases and Saturated Vapors. (OSTERBERG.) 12mo, 1 25
RANDALL—Heat. A Manual for Technical and Industrial Students. Small, 8vo, *1 50
Exercises in Heat (Loose Leaf Lab. Manual). Single Exercises, each. *0 02
REAGAN—Locomotives: Simple, Compound, and Electric. New Edition. Small 8vo, 3 50
SINCLAIR—Locomotive Engine Running and Management 12mo, 2 00
SMART—Handbook of Engineering Laboratory Practice 12mo, 2 50
SNOW—Steam-boiler Practice 8vo, 3 00
SPANGLER—Notes on Thermodynamics 12mo, 1 00
Valve-gears 8vo, 2 50
GREENE, and MARSHALL—Elements of Steam-engineering 8vo, 3 00
THOMAS—Steam-turbines 8vo, 4 00
THURSTON—Manual of Steam-boilers, their Designs, Construction, and Operation 8vo, 5 00
Manual of the Steam-engine ..... 2 vols., 8vo, 10 00
Part I. History, Structure, and Theory 8vo, 6 00
Part II. Design, Construction, and Operation 8vo, 6 00
WEHRENFENNIG—Analysis and Softening of Boiler Feed-water. (PATTERSON.) 8vo, 4 00
WEISBACH—Heat, Steam, and Steam-engines. (DU BOIS.) 8vo, 5 00
WHITMAN—Heat for Students of Household Science ..... (*In Preparation.*)
WOOD—Thermodynamics, Heat Motors, and Refrigerating Machines 8vo, 4 00

MECHANICS PURE AND APPLIED.

BURNHAM—Mechanics for Machinists ..... (*In Preparation.*)
CHURCH—Mechanics of Engineering 8vo, 6 00
Mechanics of Solids (Being Parts I, II, III of Mechanics of Engineering). 8vo, 4 50
Mechanics of Fluids (Being Part IV of Mechanics of Engineering) 8vo, 3 00
Mechanics of Internal Work 8vo, *1 50
Notes and Examples in Mechanics 8vo, 2 00

DANA—Text-book of Elementary Mechanics for Colleges and Schools..12mo, $1 50
DU BOIS—Elementary Principles of Mechanics:
Vol. I. Kinematics....8vo, 3 50
Vol. II. Statics....8vo, 4 00
Mechanics of Engineering. Vol. I....Small 4to, 7 50
FULLER and JOHNSTON—Applied Mechanics:
Vol. I. Theory of Statics and Kinetics....8vo, *2 50
Vol. II. Strength of Materials....(*In Preparation.*)
GREENE—Structural Mechanics....8vo, *2 50
HARTMANN—Elementary Mechanics for Engineering Students....12mo, *1 25
JAMES—Kinematics of a Point and the Rational Mechanics of a Particle. Small 8vo, 2 00
JAMESON—Elementary Practical Mechanics....12mo, *1 50
Exercises in Mechanics (Loose Leaf Manual)....4to, paper, *0 85
Single exercises, 2–5 cents, net, each, according to number of pages.
JOHNSON—Theoretical Mechanics....12mo, *3 00
KING—Elements of the Mechanics of Materials and of Power of Transmission....8vo, *2 50
KOTTCAMP—Exercises for the Applied Mechanics Laboratory, Loose Leaf Laboratory Manual....Oblong 4to, paper, *1 00
LANZA—Applied Mechanics....8vo, 7 50
MARTIN—Text Book of Mechanics:
Vol. I. Statics....12mo, *1 25
Vol. II. Kinematics and Kinetics....12mo, *1 50
Vol. III. Mechanics of Materials....12mo, *1 50
Vol. IV. Applied Statics....12mo, *1 50
MAURER—Technical Mechanics. Third Edition. Rewritten....8vo, *2 50
MERRIMAN—Elements of Mechanics....12mo, *1 00
Mechanics of Materials....8vo, 5 00
MICHIE—Elements of Analytical Mechanics....8vo, *4 00
ROBINSON—Principles of Mechanism....8vo, *3 00
SANBORN—Mechanics Problems....Small 8vo, *1 50
SCHWAMB and MERRILL—Elements of Mechanism....8vo, 3 00
WOOD—Elements of Analytical Mechanics....8vo, 3 00
Principles of Elementary Mechanics....12mo, 1 25

MEDICAL.

ABDERHALDEN—Physiological Chemistry in Thirty Lectures. (HALL and DEFREN.)....8vo, *5 00
BOLDUAN—Immune Sera....12mo, *1 50
BORDET—Studies in Immunity. (GAY.)....8vo, *6 00
CHAPIN—The Sources and Modes of Infection....Small 8vo, *3 00
COHNHEIM—Enzymes....12mo, *1 50
DAVENPORT—Statistical Methods with Special Reference to Biological Variations....16mo, mor., 1 50
DE FURSAC—Manual of Psychiatry. (ROSANOFF and COLLINS.)....Small 8vo, *2 50
EFFRONT—Enzymes and Their Applications. (PRESCOTT.)....8vo, 3 00
EHRLICH—Studies on Immunity. (BOLDUAN.)....8vo, 6 00
EULER—General Chemistry of the Enzymes. (POPE.)....8vo, *3 00
FISCHER—Nephritis....Small 8vo, *2 50
Oedema....8vo, *2 00
Physiology of Alimentation....Small 8vo, *2 00
FULLER—Qualitative Analysis of Medicinal Preparations....12mo, *1 50
HAMMARSTEN—Text-book on Physiological Chemistry. (MANDEL.)....8vo, *4 00
JACKSON—Directions for Laboratory Work in Physiological Chemistry....8vo, 1 25
LASSAR-COHN—Praxis of Urinary Analysis. (LORENZ.)....12mo, 1 00
LAUFFER—Electrical Injuries....16mo, *0 50
MANDEL—Hand-book for the Bio-Chemical Laboratory....12mo, 1 50
MARTIN—Measurement of Induction Shocks....12mo, *1 25
NELSON—Analysis of Drugs and Medicines....12mo, *3 00
PAULI—Physical Chemistry in the Service of Medicine. (FISCHER.)....12mo, *1 25
POZZI-ESCOT—Toxins and Venoms and their Antibodies. (COHN.)....12mo, *1 00
ROSTOSKI—Serum Diagnosis. (BOLDUAN.)....12mo, 1 00
RUDDIMAN—Incompatibilities in Prescriptions....8vo, 2 00
Whys in Pharmacy....12mo, 1 00

SALKOWSKI—Physiological and Pathological Chemistry. (ORNDORFF.) .8vo, $2 50
SATTERLEE—Outlines of Human Embryology 12mo, *1 25
SMITH—Lecture Notes on Chemistry for Dental Students.....8vo, *2 50
VON BEHRING—Suppression of Tuberculosis. (Bolduan.).....12mo, 1 00
WHIPPLE—Typhoid Fever.....Small 8vo, *3 00
WOODHULL—Military Hygiene for Officers of the Line.....Small 8vo, *1 50
Personal Hygiene.....12mo, *1 00
WORCESTER and ATKINSON—Small Hospitals Establishment and Maintenance, and Suggestions for Hospital Architecture, with Plans for a Small Hospital.....12mo, 1 25

METALLURGY.

BETTS—Lead Refining by Electrolysis.....8vo, 4 00
BOLLAND—Encyclopedia of Founding and Dictionary of Foundry Terms used in the Practice of Moulding.....12mo, 3 00
Iron Founder.....12mo, 2 50
BORCHERS—Metallurgy. (HALL and HAYWARD.).....8vo, *3 00
BURGESS and LE CHATELIER—Measurement of High Temperatures. Third Edition.....8vo, *4 00
DOUGLAS—Untechnical Addresses on Technical Subjects.....12mo, 1 00
GOESEL—Minerals and Metals: A Reference Book.....16mo, mor., 3 00
ILES—Lead-smelting.....12mo, *2 50
JOHNSON—Rapid Methods for the Chemical Analysis of Special Steels, Steel-making Alloys and Graphite. 2d Edition. Rewritten..8vo, *3 00
KEEP—Cast Iron.....8vo, 2 50
METCALF—Steel. A Manual for Steel-users.....12mo, 2 00
MINET—Production of Aluminum and its Industrial Use. (WALDO.)..12mo, 2 50
PALMER—Foundry Practice.....Small 8vo, *2 00
PRICE and MEADE—Technical Analysis of Brass.....12mo, *2 00
RODENHAUSER and SCHOENAWA—Electric Furnaces in the Iron and Steel Industry. (VOM BAUR.).....8vo, *3 50
RUER—Elements of Metallography. (MATHEWSON.).....8vo, *3 00
SMITH—Materials of Machines.....12mo, 1 00
TATE and STONE—Foundry Practice.....12mo, 2 00
THURSTON—Materials of Engineering. In Three Parts.....8vo, 8 00
Part I. Non-metallic Materials of Engineering, see Civil Engineering, page 10.
Part II. Iron and Steel.....8vo, 3 50
Part III. A Treatise on Brasses, Bronzes, and Other Alloys and Their Constituents.....8vo, 2 50
ULKE—Modern Electrolytic Copper Refining.....8vo, 3 00
WEST—American Foundry Practice.....12mo, 2 50
Moulders Text Book.....12mo, 2 50

MILITARY AND MARINE ENGINEERING.

ARMY AND NAVY.

BERNADOU—Smokeless Powder, Nitro-cellulose, and the Theory of the Cellulose Molecule.....12mo, 2 50
CHASE—Art of Pattern Making.....12mo, 2 50
Screw Propellers and Marine Propulsion.....8vo, 3 00
CLOKE—Enlisted Specialists' Examiner.....8vo, *2 00
Gunner's Examiner.....8vo, *1 50
CRAIG—Azimuth.....4to, 3 50
CREHORE and SQUIER—Polarizing Photo-chronograph.....8vo, 3 00
DAVIS—Elements of Law.....8vo, *2 50
Treatise on the Military Law of United States. 3d Ed., Revised. 8vo, *7 00
DUDLEY—Military Law and the Procedure of Courts-martial....Small 8vo, *2 50
DURAND—Resistance and Propulsion of Ships.....8vo, 5 00
DYER—Handbook of Light Artillery.....12mo, *3 00
DYSON—Screw Propellers and Estimation of Power. Two Volumes: *7 50
Vol. I. Text.....8vo,
Vol. II. Plates.....Oblong,

EISSLER—Modern High Explosives....8vo, $4 00
FIEBEGER—Text-book on Field Fortification....Small 8vo, *2 00
HAMILTON and BOND—The Gunner's Catechism....18mo, 1 00
HOFF—Elementary Naval Tactics....8vo, *1 50
INGALLS—Handbook of Problems in Direct Fire....8vo, 4 00
Interior Ballistics....8vo, *3 00
LISSAK—Ordnance and Gunnery....8vo, *6 00
LUDLOW—Logarithmic and Trigonometric Tables....8vo, *1 00
LYONS—Treatise on Electromagnetic Phenomena. Vols. I. and II., 8vo, each, *6 00
MAHAN—Permanent Fortifications. (MERCUR.)....8vo, half mor., *7 50
MANUAL FOR COURTS-MARTIAL....16mo, mor., 1 50
MERCUR—Attack of Fortified Places....12mo, *2 00
Elements of the Art of War....8vo, *4 00
NIXON—Adjutants' Manual....24mo, 1 00
PEABODY—Computations for Marine Engine....8vo, *2 50
Naval Architecture....8vo, 7 50
Propellers....8vo, 1 25
PHELPS—Practical Marine Surveying....8vo, *2 50
PUTNAM—Nautical Charts....8vo, 2 00
RUST—Ex-meridian Altitude, Azimuth and Star-Finding Tables....8vo, 5 00
SELKIRK—Catechism of Manual of Guard Duty....24mo, *0 50
SHARPE—Art of Subsisting Armies in War....18mo, mor., 1 50
TAYLOR—Speed and Power of Ships. 2 vols. Text 8vo, plates oblong 4to, *7 50
TUPES and POOLE—Manual of Bayonet Exercise and Musketry Fencing. 24mo, leather, *0 50
WEAVER—Military Explosives....8vo, *3 00
WOODHULL—Military Hygiene for Officers of the Line....Small 8vo, *1 50

MINERALOGY.

BROWNING—Introduction to Rarer Elements....8vo, *1 50
BRUSH—Manual of Determinative Mineralogy. (PENFIELD.)....8vo, 4 00
BUTLER—Pocket Hand-book of Blowpipe Analysis....16mo, *0 75
Pocket Hand-book of Minerals....16mo, mor., 3 00
CHESTER—Catalogue of Minerals....8vo, paper, 1 00
Cloth, 1 25
CRANE—Gold and Silver....8vo, *5 00
DANA—First Appendix to Dana's New "System of Mineralogy.". Large 8vo, 1 00
Manual of Mineralogy. (FORD.)....12mo, *2 00
Minerals, and How to Study Them....12mo, 1 50
System of Mineralogy....Large 8vo, half leather, 12 50
Text-book of Mineralogy....8vo, 4 00
DOUGLAS—Untechnical Addresses on Technical Subjects....12mo, 1 00
EAKLE—Mineral Tables....8vo, 1 25
ECKEL—Building Stones and Clays....8vo, *3 00
GOESEL—Minerals and Metals: A Reference Book....16mo, mor., 3 00
GROTH—The Optical Properties of Crystals. (JACKSON.)....8vo, *3 50
Introduction to Chemical Crystallography. (MARSHALL.)....12mo, 1 25
HAYES—Handbook for Field Geologists....16mo, mor., *1 50
IDDINGS—Igneous Rocks....8vo, 5 00
Rock Minerals....8vo, 5 00
JOHANNSEN—Determination of Rock-forming Minerals in Thin Sections, 8vo, With Thumb Index, 5 00
LEWIS—Determinative Mineralogy....Small 8vo, *1 50
MCLEOD—The A. B. C. of the Useful Minerals....16mo, mor., *1 00
MARTIN—Laboratory Guide to Qualitative Analysis with the Blowpipe.12mo, *0 60
MERRILL—Non-metallic Minerals: Their Occurrence and Uses....8vo, 4 00
Stones for Building and Decoration....8vo, 5 00
PENFIELD—Notes on Determinative Mineralogy and Record of Mineral Tests....8vo, paper, *0 50
Tables of Minerals, Including the Use of Minerals and Statistics of Domestic Production....8vo, 1 00
PIRSSON—Rocks and Rock Minerals....12mo, *2 50
RICHARDS—Synopsis of Mineral Characters....12mo, mor., *1 25

RIES—Building Stones and Clay Products.....8vo, *$3 00
Clays: Their Occurrence, Properties and Uses.....8vo, *5 00
and LEIGHTON—History of the Clay-working Industry of the United States.....8vo, *2 50
and WATSON—Engineering Geology.....(*In Press.*)
ROWE—Practical Mineralogy Simplified.....12mo, *1 25
TILLMAN—Text-book of Important Minerals and Rocks.....8vo, *2 00
WASHINGTON—Manual of the Chemical Analysis of Rocks.....8vo, 2 00

MINING.

BEARD—Mine Gases and Explosions.....Small 8vo, *3 00
BRUNSWIG—Explosives. (MUNROE and KIBLER.).....Small 8vo, *3 00
BRUNTON and DAVIS—Modern Practice in Tunneling.....(*In Press.*)
CRANE—Gold and Silver.....8vo, *5 00
Index of Mining Engineering Literature, Vol. I.....8vo, *4 00
8vo, mor., *5 00
Vol. II.....8vo, *3 00
8vo, mor., *4 00
Ore Mining Methods.....8vo, *3 00
DANA and SAUNDERS—Rock Drilling.....8vo, *4 00
DOUGLAS—Untechnical Addresses on Technical Subjects.....12mo, 1 00
EISSLER—Modern High Explosives.....8vo, 4 00
GILBERT, WIGHTMAN and SAUNDERS—Subways and Tunnels of New York. 8vo, *4 00
GOESEL—Minerals and Metals: A Reference Book.....16mo, mor., 3 00
IHLSENG—Manual of Mining.....8vo, 5 00
ILES—Lead Smelting.....12mo, *2 50
PEELE—Compressed Air Plant.....8vo, *3 50
RIEMER—Shaft Sinking under Difficult Conditions. (CORNING and PEELE.) 8vo, 3 00
WEAVER—Military Explosives.....8vo, *3 00
WILSON—Cyanide Processes.....12mo, 1 50
Hydraulic and Placer Mining.....12mo, 2 50

SANITARY SCIENCE.

BASHORE—Outlines of Practical Sanitation.....12mo, *1 25
Sanitation of a Country House.....12mo, 1 00
Sanitation of Recreation Camps and Parks.....12mo, 1 00
FOLWELL—Sewerage. (Designing, Construction, and Maintenance.)...8vo, 3 00
Water-supply Engineering.....8vo, 4 00
FOWLER—Sewage Works Analyses.....12mo, 2 00
GERHARD—Guide to Sanitary Inspections.....12mo, 1 50
Modern Baths and Bath Houses.....8vo, *3 00
Sanitation of Public Buildings.....12mo, 1 50
GERHARD—The Water Supply, Sewerage, and Plumbing of Modern City Buildings.....8vo, *4 00
HAZEN—Clean Water and How to Get It. Second Edition.....Small 8vo, 1 50
Filtration of Public Water-supplies.....8vo, 3 00
HOOKER—Chloride of Lime in Sanitation.....8vo, 3 00
KINNICUTT, WINSLOW and PRATT—Sewage Disposal.....8vo, *3 00
LEACH-WINTON—Inspection and Analysis of Food. Third Edition, Revised and Enlarged by Dr. Andrew L. Winton.....8vo, 7 50
MARSTON and ERINGER—Sewers and Drains.....(*In Preparation.*)
MASON—Examination of Water. (Chemical and Bacteriological.)....12mo, 1 25
Water-supply. (Considered principally from a Sanitary Standpoint.) 8vo, 4 00
MERRIMAN—Elements of Sanitary Engineering.....8vo, *2 00
OGDEN—Sewer Construction.....8vo, 3 00
Sewer Design.....12mo, 2 00
and CLEVELAND—Practical Methods of Sewage Disposal for Residences, Hotels and Institutions.....8vo, *1 50
PARSONS—Disposal of Municipal Refuse.....8vo, 2 00

PRESCOTT and WINSLOW—Elements of Water Bacteriology, with Special Reference to Sanitary Water Analysis. Third Edition, Rewritten. Small 8vo, *$1 75
PRICE—Handbook on Sanitation. Third Edition. Rewritten. 12mo, *1 50
The Modern Factory. (*In Press.*)
RICHARDS—Conservation by Sanitation. 8vo, 2 50
Cost of Cleanness. 12mo, 1 00
Cost of Food. A Study in Dietaries. 12mo, 1 00
Cost of Living as Modified by Sanitary Science. 12mo, 1 00
Cost of Shelter. 12mo, 1 00
Laboratory Notes on Industrial Water Analysis. 8vo, *0 50
RICHARDS and WOODMAN—Air, Water, and Food from a Sanitary Standpoint. 8vo, 2 00
RICHEY—Plumbers', Steam-fitters', and Tinners' Edition (Building Mechanics' Ready Reference Series) 16mo, mor., *1 50
RIDEAL—Disinfection and the Preservation of Food. 8vo, 4 00
SOPER—Air and Ventilation of Subways. 12mo, 2 50
TURNEAURE and RUSSELL—Public Water-supplies. 8vo, 5 00
VENABLE—Garbage Crematories in America. 8vo, 2 00
Method and Devices for Bacterial Treatment of Sewage. 8vo, 3 00
WARD and WHIPPLE—Freshwater Biology. (*In Press.*)
WHIPPLE—Microscopy of Drinking-water. 8vo, 3 50
Typhoid Fever. Small 8vo, *3 00
Value of Pure Water. Small 8vo, 1 00

MISCELLANEOUS.

BIGELOW—A Meteorological Treatise. (*In Press.*)
BURT—Railway Station Service. 12mo, *2 00
CHAPIN—How to Enamel. 12mo, *1 00
FERREL—Popular Treatise on the Winds. 8vo, 4 00
FITZGERALD—Boston Machinist. 18mo, 1 00
FRITZ—Autobiography of John. 8vo, *2 00
GANNETT—Statistical Abstract of the World. 24mo, 0 75
GREEN—Elementary Hebrew Grammar. 12mo, 1 25
HAINES—American Railway Management. 12mo, 2 50
HANAUSEK—The Microscopy of Technical Products. (WINTON.) 8vo, 5 00
JACOBS—Betterment Briefs. A Collection of Published Papers on Organized Industrial Efficiency. 8vo, 3 50
KENT—Investigating an Industry. 12mo, *1 00
METCALFE—Cost of Manufactures, and the Administration of Workshops. 8vo, 5 00
PARKHURST—Applied Methods of Scientific Management. 8vo, *2 00
PUTNAM—Nautical Charts. 8vo, 2 00
RICKETTS—History of Rensselaer Polytechnic Institute, 1824–1894. Small 8vo, 3 00
ROTCH and PALMER—Charts of the Atmosphere for Aeronauts and Aviators. Oblong 4to, *2 00
ROTHERHAM—Emphasised New Testament. Large 8vo, 2 00
RUST—Ex-Meridian Altitude, Azimuth and Star-finding Tables. 8vo, 5 00
STANDAGE—Decoration of Wood, Glass, Metal, etc. 12mo, 2 00
TOMPKINS—The Science of Knitting. (*In Press.*)
WESTERMAIER—Compendium of General Botany. (SCHNEIDER.) 8vo, 2 00
WINSLOW—Elements of Applied Microscopy. 12mo, 1 50

Jmkg
$\overline{2}$ 25 × net

THIS BOOK IS DUE ON THE LAST DATE STAMPED BELOW

AN INITIAL FINE OF 25 CENTS

WILL BE ASSESSED FOR FAILURE TO RETURN THIS BOOK ON THE DATE DUE. THE PENALTY WILL INCREASE TO 50 CENTS ON THE FOURTH DAY AND TO $1.00 ON THE SEVENTH DAY OVERDUE.

JAN 24 1935

REC'D LD

MAY 27 '65 -2 PM

LD 21–100*m*-8,'34

YC 128

3594

UNIVERSITY OF CALIFORNIA LIBRARY